STATE OF CALIFORNIA - DEPARTMENT OF TRANSPORTATION

ENGINEER'S DAILY REPORT

LAN Engineering Consultant

REPORT NO.	DATE		
691 {7-day}{ + 210 Project Work Day}	November 03, 2008		M T W T F S S (DAY)
NORMAL WORK HOUR: START: 6:00AM STOP: 3:30PM		WEATHER: CLOUDY / SHOWERS	
LOCATION : Construction Field Office : 333 Burma Road, Oakland 94607			
Working Drawing Campus Office : 375 Burma Road, Oakland 94607			

04-SF-80-13.2/13.9
Contract No. 04-0120F4
{SAS Superstructure}

Caltrans Supervisor:
Gary Lai
Senior Bridge Engineer

Office Work:

- **Shop Drawing Status Meeting (Caltrans – Design).**
  - Handed out the latest updated priority List with PB status as of November 03, 2008. See attached.
  - Discussed Submittal # 815 with Bob Brignano about the TY LIN shop drawings not having the PB redlines included and the X:drive chart attachment for the submittal. Bob sent an email to TY LIN coving the issue.
  - The following is a list of issues that need to be addressed this week:
    - One of the submittals could not be referenced to the details because that submittal has not been received yet. This was noted in the PB Memo sheet and placed in PMIV. The submittal will probably be submitted in the lift 14 shop drawings.

- **CCO # 59/68 OBG/Tower Additional penetrations.**
  - The OBG Master Penetration charts were posted in the X:drive and dated October 31, 2008. I sent an email to all personnel informing them of the posting.

- **CCO # 75 Review Ongoing.**
  - Performing a complete review and comment package for the PB design group. Working with Sandy Michelotti on the package.

- **Concurrence Memo for CCO # 90.**
  - Working on drafting the concurrence memo for CCO #90.

- **CCO # 44 Document Review.**
  - Received a package from Scott Fabel to review for CCO # 44. Will review and comment by tomorrow.

RECD '08 NOV-05 #007568

STATE OF CALIFORNIA - DEPARTMENT OF TRANSPORTATION

ENGINEER'S DAILY REPORT

LAN Engineering Consultant

REPORT NO.	DATE	
691 {7-day}{ + 210 Project Work Day}	November 03, 2008	M T W T F S S (DAY)

- **CCO # 43 Document Review.**
  - Received an email from George Boughosn with the TY LIN Updated Special Provisions change for CCO #43 for review and comment.
  - Need to discuss the change in the scope of work to be placed in CCO #43 with Bill Shedd. The change in the way the Poles are to be incorporated in the CCO might have to modify per a meeting on Friday October 31, 2008 between Scott Fabel, Bill Shed and myself.

Any questions or comments you can reach me at (916) 919-7158. My E-Mail address is Mike.Travis@LANEngineering.com or Michael_Travis@dot.ca.gov

END OF REPORT

Work hours 0530-1730 – 8 hours regular – 2 hours overtime

Attachments:

1. Shop drawing submittal status priority list.
2. Email for review of CCO # 43 Specification Changes.
3. Email for Posting OGB Master Penetration Charts to X:Drive.
4. Email Posting Tower Chart to X:drive.
5. Email on Submittal 815 PB Redline Issue.
6. CCO 44 Updated review package.

SIGNATURE

Name	TITLE
Michael F. Travis	Electrical Engineer – LAN Engineering

PB OBG STATUS CHART November 03, 2008

Attachment # 1 (1/3)

Ty ok	10/28/2008	Submittal Priority by ABF Requested Due Date	Information Only	Responed / *redline	**Posted	Reviewing	PB color code II
CT/JV Status	Reference	Subject	Req. Due Date	Resp. Engineer	Discipline	Date Received	ontract Due Dat
pending	ABF-SUB-000774R00*	OBG - Miscellaneous (BKR) - Bikepath Railing	25-Sep-2008	Bob Brignano	H	06-Aug-2008	25-Sep-2008
pending	ABF-SUB-000792R00*	OBG - Plate Sub Assemblies (BP, EP, SP) - Bottom, Edge, Side - LIFT 13E	08-Oct-2008	John Lyons	H	19-Aug-2008	08-Oct-2008
Ty by fri	ABF-SUB-000809R00	OBG - Exterior Plate Details (PL) - Plate Types 6 thru 16 - LIFT 13E	23-Oct-2008	Abbas Iranmanesh	H	03-Sep-2008	23-Oct-2008
pending	ABF-SUB-000811R00*	OBG - Bottom Plate Sub Assembly (BP) - Plate Types 6, 13, 14 - LIFT 13E	23-Oct-2008	Chris Havel	H	03-Sep-2008	23-Oct-2008
Ty by fri	ABF-SUB-000815R00*	OBG - Standard Details (X) - LIFT 13E	23-Oct-2008	Bob Brignano	H	03-Sep-2008	23-Oct-2008
Ty by 10/27	ABF-SUB-000708R02	OBG - BIKEPATH STANDARD DETAILS (BKWD)	28-Oct-2008	Alex Schmitt	H	14-Oct-2008	28-Oct-2008
Ty by 10/27	ABF-SUB-000634R06	Repair Procedure for Closed-rib Welds	30-Oct-2008	Chris Havel	H	16-Oct-2008	30-Oct-2008
Ty by fri	ABF-SUB-000667R02	OBG - Standard Layout Details (L) - LIFT 13W	30-Oct-2008	Alex Schmitt	H	16-Oct-2008	30-Oct-2008
Ty by fri	ABF-SUB-000663R02	OBG - Layout Details (L) - Lift 13E	31-Oct-2008	Bob Brignano	H	17-Oct-2008	31-Oct-2008
Ty by 10/27	ABF-SUB-000634R07	Repair Procedure for Closed-rib Welds	03-Nov-2008	Chris Havel	H	20-Oct-2008	03-Nov-2008
Ty by 10/27	ABF-SUB-000832R00	Hinge K Spherical Bushing Ring Bearing Fabrication/Assembly Plans	03-Nov-2008	Ajay Sehgal	H	24-Sep-2008	13-Nov-2008
Ty by fri	ABF-SUB-000292R01	Crossbeam to Box Girder Connection Erection Procedure	04-Nov-2008	Philip He	H	21-Oct-2008	04-Nov-2008
	ABF-SUB-000547R01	Quality Control Plan - the Hinge K Spherical Bushing Ring Bearings	04-Nov-2008	Warren Collins	H	21-Oct-2008	31-Oct-2008
Prelim by fri	ABF-SUB-000818R00	OBG - Floorbeam Sub Assembly 119 (FB) - LIFT 13E	04-Nov-2008	Victor Altamirano	H	15-Sep-2008	04-Nov-2008
Prelim by fri	ABF-SUB-000820R00	OBG - Deck Plate Sub Assembly (DP) - Plate Types 2, 18 - LIFT 13E	04-Nov-2008	John Lyons	H	15-Sep-2008	04-Nov-2008
	ABF-SUB-000821R00	OBG - Edge Beam (EB) - LIFT 13E	04-Nov-2008	Abbas Iranmanesh	H	15-Sep-2008	04-Nov-2008
Prelim by fri	ABF-SUB-000822R00	OBG - Side Plate Sub Assembly (SP) - Plate Types 4, 5, 16 - LIFT 13E	04-Nov-2008	Bob Brignano	H	15-Sep-2008	04-Nov-2008
	ABF-SUB-000823R00	OBG - Edge, Vertical Plate Sub Assemblies (EP, VP) - LIFT 13E	04-Nov-2008	Philip He	H	15-Sep-2008	04-Nov-2008
Prelim by fri	ABF-SUB-000824R00*	OBG - Longitudinal Diaphragm Sub Assembly (LD) - Type 2 - LIFT 13E	04-Nov-2008	John Lyons	H	15-Sep-2008	04-Nov-2008
Prelim by fri	ABF-SUB-000825R00	OBG - Interior Plate Details (PL) - Plate Type K - LIFT 13E	04-Nov-2008	Chris Havel	H	15-Sep-2008	04-Nov-2008
	ABF-SUB-000826R00	OBG - Plate Rib Stiffener Details (RS) - LIFT 13E	04-Nov-2008	Alex Schmitt	H	15-Sep-2008	04-Nov-2008
	ABF-SUB-000827R00	OBG - Shop Assembly (SA) - LIFT 13E	04-Nov-2008	Philip He	H	15-Sep-2008	04-Nov-2008
	ABF-SUB-000828R00	OBG - Segment Assembly (SEG) - Seg OBE Section - LIFT 13E	04-Nov-2008	Victor Altamirano	H	15-Sep-2008	04-Nov-2008
	ABF-SUB-000054R23	Welding Quality Control Plan (WQCP) for ZPMC - Addenda 17 & 18	05-Nov-2008	Chris Havel	H	22-Oct-2008	05-Nov-2008
	ABF-SUB-000829R00*	OBG - Standard Details (X) - LIFT 13E	05-Nov-2008	Chris Havel	H	16-Sep-2008	05-Nov-2008
	ABF-SUB-000597R03*	OBG - Standard (BKTD) - BikePath Typical Details	06-Nov-2008	Bob Brignano	H	23-Oct-2008	06-Nov-2008
	ABF-SUB-000708R03*	OBG - BikePath Standard Details (BK, BKPL)	06-Nov-2008	Alex Schmitt	H	23-Oct-2008	06-Nov-2008
	ABF-SUB-000598R02	E2 Bearing Fabrication Procedure	10-Nov-2008	Bob Brignano	H	27-Oct-2008	10-Nov-2008
	ABF-SUB-000599R02	E2 Shear Key Fabrication Procedure	10-Nov-2008	Alex Schmitt	H	27-Oct-2008	10-Nov-2008
	ABF-SUB-000692R03	Pier E2 Bearing Shop Drawings	10-Nov-2008	Chris Havel	H	27-Oct-2008	10-Nov-2008
	ABF-SUB-000693R02	Pier E2 Shear Key Shop Drawings	10-Nov-2008	Bob Brignano	H	27-Oct-2008	10-Nov-2008
	ABF-SUB-000833R00	OBG - Field Bolt Lists (EFB)	13-Nov-2008	Chris Havel	H	24-Sep-2008	13-Nov-2008
Prelim by fri	ABF-SUB-000839R00	OBG - Miscellaneous Shop Drawing (WDSH) - West Deviation Saddle Housing	18-Nov-2008	Bob Brignano	H	29-Sep-2008	18-Nov-2008
	ABF-SUB-000841R00	OBG - Longitudinal Diaphragm Sub Assembly (LD) - LIFT 13E	18-Nov-2008	John Lyons	H	29-Sep-2008	18-Nov-2008
	ABF-SUB-000842R00	OBG - Plate Sub Assembly (PL) - LIFT 13E	18-Nov-2008	Alex Schmitt	H	29-Sep-2008	18-Nov-2008

PB OBG STATUS CHART November 03, 2008

Attachment # 1 (2/3)

	ABF-SUB-000843R00	OBG - Plate Stiffener Assembly (RS) - Vertical, Interior Plate Details - LIFT 13E	18-Nov-2008	Ajay Sehgal	H	29-Sep-2008	18-Nov-2008
	ABF-SUB-000844R00	OBG - Segment Assembly (SEG) - LIFT 13E	18-Nov-2008	Abbas Iranmanesh	H	29-Sep-2008	18-Nov-2008
	ABF-SUB-000845R00	OBG - Segment Assembly (SEG) - OBE 13b Section - LIFT 13E	19-Nov-2008	Chris Havel	H	30-Sep-2008	19-Nov-2008
	ABF-SUB-000846R00	OBG - Shop Assembly Details (SA) - LIFT 13E	19-Nov-2008	Ajay Sehgal	H	30-Sep-2008	19-Nov-2008
	ABF-SUB-000848R00	OBG - Floorbeam Sub Assembly (FB) - LIFT 13E	21-Nov-2008	Abbas Iranmanesh	H	02-Oct-2008	21-Nov-2008
	ABF-SUB-000849R00	OBG - Standard Details (X) - Floorbeam, Splice Plates - LIFT 13E	21-Nov-2008	Ajay Sehgal	H	02-Oct-2008	21-Nov-2008
	ABF-SUB-000850R00	OBG - Deck Plate Sub Assembly (DP) - LIFT 13E	21-Nov-2008	John Lyons	H	02-Oct-2008	21-Nov-2008
	ABF-SUB-000851R00	OBG - "K" Plate Sub Assembly (KP) - LIFT 13E	21-Nov-2008	Victor Altamirano	H	02-Oct-2008	21-Nov-2008
	ABF-SUB-000852R00	OBG - Side Plate Sub Assembly (SP) - LIFT 13E	21-Nov-2008	Alex Schmitt	H	02-Oct-2008	21-Nov-2008
	ABF-SUB-000853R00	OBG - Vertical Plate Sub Assembly (VP) - LIFT 13E	21-Nov-2008	Chris Havel	H	02-Oct-2008	21-Nov-2008
	ABF-SUB-000855R00	OBG - Miscellaneous Details (OEM) - Field Splices	22-Nov-2008	John Lyons	H	03-Oct-2008	22-Nov-2008
	ABF-SUB-000858R00	OBG - Corner Assembly (CA) - LIFT 13E	26-Nov-2008	Philip He	H	07-Oct-2008	26-Nov-2008
	ABF-SUB-000859R00	OBG - Segment Assembly (SEG) - LIFT 13E	26-Nov-2008	Chris Havel	H	07-Oct-2008	26-Nov-2008
	ABF-SUB-000860R00	OBG - Shop Assembly (SA) - LIFT 13E	26-Nov-2008	Abbas Iranmanesh	H	07-Oct-2008	26-Nov-2008
	ABF-SUB-000861R00	OBG - Standard Details (X) - LIFT 13E	26-Nov-2008	Philip He	H	07-Oct-2008	26-Nov-2008
	ABF-SUB-000862R00	OBG - Plate Sub Assembly Details (PL, RS) - LIFT 13E	26-Nov-2008	Bob Brignano	H	07-Oct-2008	26-Nov-2008
	ABF-SUB-000863R00	OBG - Side Plate Sub Assembly (SP) - Plate Type 5 - LIFT 13E	26-Nov-2008	Ajay Sehgal	H	07-Oct-2008	26-Nov-2008
	ABF-SUB-000864R00	OBG - Vertical Plate Sub Assembly (VP) - LIFT 13E	26-Nov-2008	John Lyons	H	07-Oct-2008	26-Nov-2008
	ABF-SUB-000087R25	Standard Weld Details (WD) - Typical Weld Details	27-Nov-2008	Philip He	H	08-Oct-2008	27-Nov-2008
	ABF-SUB-000865R00	OBG - Shop Assembly Details (SA) - LIFT 13E	27-Nov-2008	Victor Altamirano	H	08-Oct-2008	27-Nov-2008
	ABF-SUB-000866R00	OBG - Segment Assembly Details (SEG) - LIFT 13E	27-Nov-2008	Victor Altamirano	H	08-Oct-2008	27-Nov-2008
	ABF-SUB-000867R00	OBG - Floorbeam Sub Assembly (FB) - LIFT 13E	27-Nov-2008	Bob Brignano	H	08-Oct-2008	27-Nov-2008
	ABF-SUB-000857R00	OBG - Standard Details & Sections (SD)	28-Nov-2008	Alex Schmitt	H	09-Oct-2008	28-Nov-2008
	ABF-SUB-000868R00	OBG - Standards (X) - LIFT 13E	28-Nov-2008	Chris Havel	H	09-Oct-2008	28-Nov-2008
	ABF-SUB-000869R00	OBG - Shop Assembly (SA) - LIFT 13E	28-Nov-2008	Victor Altamirano	H	09-Oct-2008	28-Nov-2008
	ABF-SUB-000870R00	OBG - Crossbeam Details (CB) - Crossbeams 1, 2, 3	29-Nov-2008	Bob Brignano	H	10-Oct-2008	29-Nov-2008
	ABF-SUB-000871R00	OBG Erection Engineering Report for Lifts 7-11	01-Dec-2008	Chris Havel	H	10-Oct-2008	29-Nov-2008
	ABF-SUB-000872R00	Freehand Flame Cutting Shop Procedure - ZPMC Fabrication Procedure	02-Dec-2008	Ajay Sehgal	H	13-Oct-2008	02-Dec-2008
Ty by 10/27	ABF-SUB-000876R00	Hinge K Bearing Manual and Calculations - Lubrite Tech	05-Dec-2008	Ajay Sehgal	H	16-Oct-2008	05-Dec-2008

Attachment # 1 (3/3)

PB TOWER STATUS CHART November 03, 2008

Ty ok	10/28/2008	Submittal Priority by ABF Requested Due Date	Information Only	Responed / *redline	**Posted	Reviewing	PB color code ID
CT/JV Status	Reference	Subject	Req. Due Date	Resp. Engineer	Discipline	Date Received	Contract Due Date
Ty by fri	ABF-SUB-000605R04	TOWER - Skirt Drawings	21-Oct-2008	Sanny Khow	P	07-Oct-2008	21-Oct-2008
Ty 11/7	ABF-SUB-000687R01	TOWER - TL Drawings - LIFT 3	24-Oct-2008	Sanny Khow	P	10-Oct-2008	24-Oct-2008
Ty by fri	ABF-SUB-000605R05	TOWER - Skirt Drawings	28-Oct-2008	Sanny Khow	P	14-Oct-2008	28-Oct-2008
Ty by fri	ABF-SUB-000621R02	TOWER - Plate Skin D - LIFT 4	28-Oct-2008	Aaron Prchlik	P	14-Oct-2008	28-Oct-2008
Ty by fri	ABF-SUB-000622R02*	TOWER - Plate Skin E - LIFT 4	28-Oct-2008	Michelle Chui	P	14-Oct-2008	28-Oct-2008
Ty 11/7	ABF-SUB-000687R02	TOWER - TL Drawings - LIFT 3	29-Oct-2008	Sanny Khow	P	15-Oct-2008	29-Oct-2008
Ty by fri	ABF-SUB-000141R25	TOWER - T1 Tower Weld Details	04-Nov-2008	Aaron Prchlik	P	21-Oct-2008	04-Nov-2008
Ty by fri	ABF-SUB-000605R06	TOWER - Skirt Drawings	04-Nov-2008	Sanny Khow	P	21-Oct-2008	04-Nov-2008
	ABF-SUB-000100R04	Tower Cross Bracing Spherical Bushing Manual	10-Nov-2008	Aaron Prchlik	P	27-Oct-2008	10-Nov-2008
	ABF-SUB-000819R01						
	ABF-SUB-000747R03						
	ABF-SUB-000670R04						
	ABF-SUB-000654R03						
	ABF-SUB-000636R02						
	ABF-SUB-000604R04						
	ABF-SUB-000603R04						
	ABF-SUB-000365R13						
	ABF-SUB-000355R02						

Attachment #2 (1/1)

George Boughosn/D04/Caltrans/CAGov
11/03/2008 03:24 PM

To Michael Travis@dot.ca.gov
cc
bcc
Subject Fw: CCO 43 Special Provisions

----- Forwarded by George Boughosn/D04/Caltrans/CAGov on 11/03/2008 03:24 PM -----

George Boughosn/D04/Caltrans/CAGov
11/03/2008 03:12 PM

To Mike Travis
cc Bill Shedd/D04/Caltrans/CAGov@DOT, Scott_Fabel@dot.ca.gov
Subject Fw: CCO 43 Special Provisions

Hi Mike,

For your review again please.

Thanks
George

----- Forwarded by George Boughosn/D04/Caltrans/CAGov on 11/03/2008 03:08 PM -----

"Andrew Baumberger" <andrew.baumberger@tylin.com>
11/03/2008 02:33 PM

To "Scott Fabel" <Scott_Fabel@dot.ca.gov>, "George Boughosn" <george_boughosn@dot.ca.gov>
cc "james.duxbury@tylin.com" <james.duxbury@tylin.com>, "Marwan Nader" <marwan.nader@tylin.com>, "Alex.Sanjines@tylin.com" <Alex.Sanjines@tylin.com>
Subject CCO 43 Special Provisions

Scott,

Attached is the word document containing the Special Provisions for CCO 43. We will need the paper copies for stamping then.

Andrew Baumberger
T.Y. LIN International
415.307.9853

CCO 43-SP.doc

Attachment #3 (1/1)

Michael Travis/HQ/Caltrans/CAGov

11/03/2008 10:43 AM

To Gary J Lai/D04/Caltrans/CAGov@DOT, Bill Shedd/D04/Caltrans/CAGov@DOT

cc SAS - Caltrans, Chris Havel/D04/Caltrans/CAGov@DOT, Scott Fabel/D04/Caltrans/CAGov@DOT, George Boughosn/D04/Caltrans/CAGov@DOT

bcc

Subject OBG Master Penetration Charts (October 31, 2008) Update Posted

I have posted the OBG Master Penetration Chart Update (October 31, 2008) on the X:Drive at the following location:

X:\SAS\MEP Master Penetration Charts\Team Oakland Update October 31.2008 \OBG

Any questions or comments please let me know.

Michael Travis
SFOBB Construction Offices
Design Campus Building
375 Burma Road
Oakland Ca. 94607
Phone: 510-808-4618

Attachment #4 (1/1)

Michael
Travis/HQ/Caltrans/CAGov
11/03/2008 11:35 AM

To Saeed_Shahmirzai@dot.ca.gov, KingN@PBworld.com, Sanei@pbworld.com, MorganR@pbworld.com
cc
bcc
Subject OBG Master Penetration Charts Update (October 31, 2008)

FYI

Attached is a copy of the OBG master penetration charts updated October 31, 2008.

OBG Master Charts (October 31, 2008) : OBG-MEP Penetrations Master Chart Package 10.31.2008 MFT.xls

Any questions or comments please let me know.

Michael Travis
SFOBB Construction Offices
Design Campus Building
375 Burma Road
Oakland Ca. 94607
Phone: 510-808-4618

Attachment #4 (1/1)

Martin Chandrawinata/D04/Caltrans/CAGov

11/03/2008 06:12 PM

To Michael Travis/HQ/Caltrans/CAGov@DOT

cc Bill Shedd/D04/Caltrans/CAGov@DOT, Chris Havel/D04/Caltrans/CAGov@DOT, Gary J Lai/D04/Caltrans/CAGov@DOT, George

bcc

Subject Tower and Bolt Holes Chart - updated

All:

The tower penetration update (Oct 31, 2008) has also been posted on the x drive:
X:\SAS\MEP Master Penetration Charts\Team Oakland Update October 31.2008\Tower

The bolt hole stiffeners at the OBG (Lift 1-11) is posted on the x drive. The update of this file to include Lift 12, 13 is anticipated end of the week.
X:\SAS\MEP Master Penetration Charts\Team Oakland Update October 31.2008\Bolt Holes stiffener OBG

Regards,

Martin P. Chandrawinata
SAS Bridge Construction
Ph. 510-286-0535
www.baybridgeinfo.org

Consider the environment. Please don't print this e-mail unless you really need to.
Michael Travis/HQ/Caltrans/CAGov

Michael Travis/HQ/Caltrans/CAGov

11/03/2008 10:43 AM

To Gary J Lai/D04/Caltrans/CAGov@DOT, Bill Shedd/D04/Caltrans/CAGov@DOT

cc SAS - Caltrans, Chris Havel/D04/Caltrans/CAGov@DOT, Scott Fabel/D04/Caltrans/CAGov@DOT, George Boughosn/D04/Caltrans/CAGov@DOT

Subject OBG Master Penetration Charts (October 31, 2008) Update Posted

I have posted the OBG Master Penetration Chart Update (October 31, 2008) on the X:Drive at the following location:

X:\SAS\MEP Master Penetration Charts\Team Oakland Update October 31.2008 \OBG

Any questions or comments please let me know.

Michael Travis
SFOBB Construction Offices
Design Campus Building
375 Burma Road
Oakland Ca. 94607
Phone: 510-808-4618

Attachment #5 (1/2)

Bob Brignano/D04/Caltrans/CAGov

11/03/2008 11:39 AM

To "jduxbury@tylin.com" <jduxbury@tylin.com>, mnader@tylin.com, turner@wai.com, nvo@tylin.com
cc Brian Boal/D04/Caltrans/CAGov@DOT, Gary J Lai/D04/Caltrans/CAGov@DOT, John P Lyons/D04/Caltrans/CAGov@DOT, Michael
bcc
Subject Response to Submittal 815

History: This message has been forwarded.

The final redlines do not include the PB penetration comments on 4 drawings. The PB memo notes that the redlines have also been made in another submittal (#769), but we still think that they should be included in submittal #815. Please send an updated with revised redlines.

"sas sas" <sas@tylin.com>

"sas sas" <sas@tylin.com>
Sent by: "Veronica Verduzco" <veronica.verduzco@tylin.com>

10/31/2008 04:35 PM

Please respond to "jduxbury@tylin.com" <jduxbury@tylin.com>

To "Gary J Lai" <Gary_J_Lai@dot.ca.gov>

cc "Gary Pursell (E-mail)" <gary_pursell@dot.ca.gov>, "Rick Morrow (E-mail)" <Rick_Morrow@dot.ca.gov>, "Reza Valizadeh (E-mail)" <Reza_Valizadeh@dot.ca.gov>, "Brian Boal (E-mail)" <brian_boal@dot.ca.gov>, "Nader, Marwan" <mnader@tylin.com>, "Duxbury, James" <jduxbury@tylin.com>, "Tom Ho" <Tom.Ho@tylin.com>, "Chris Havel (E-mail)" <chris_havel@dot.ca.gov>, "Gina Rizzardo (E-mail)" <gina_rizzardo@dot.ca.gov>, "Francisco Carpio (E-mail)" <Francisco_Carpio@dot.ca.gov>, "Wenyi Long (E-mail)" <Wenyi_Long@dot.ca.gov>, "Saeid Kamkar (E-mail)" <Saeid_kamkar@dot.ca.gov>, "sas@tylin.com" <sas@tylin.com>, "Ade_Akinsanya@dot.ca.gov" <Ade_Akinsanya@dot.ca.gov>, "lalit_mathur@dot.ca.gov" <lalit_mathur@dot.ca.gov>, "John_Shen@dot.ca.gov" <John_Shen@dot.ca.gov>, "Alex Sanjines" <Alex.Sanjines@tylin.com>, "timothy_daszko@dot.ca.gov" <timothy_daszko@dot.ca.gov>, "Vo, Nhan" <nvo@tylin.com>, "George Baker" <George.Baker@tylin.com>, "Stanley Ku" <Stanley_Ku@dot.ca.gov>, "Faleteine Bell" <Faleteine_Bell@dot.ca.gov>, "Lijia Zhang" <Lijia_Zhang@dot.ca.gov>, "John Chan" <John.Chan@tylin.com>, "Dan Turner" <turner@wai.com>, "Veronica Verduzco" <Veronica.Verduzco@tylin.com>, "Warren Collins" <Warren_Collins@dot.ca.gov>, "Alex_Schmitt@dot.ca.gov" <Alex_Schmitt@dot.ca.gov>, "bob_brignano@dot.ca.gov" <bob_brignano@dot.ca.gov>, "John Lyons (john_p_lyons@dot.ca.gov)" <john_p_lyons@dot.ca.gov>, "abbas_iranmanesh@dot.ca.gov" <abbas_iranmanesh@dot.ca.gov>

Subject RE: 04-0120F4 (Response Submittal # 809, 815)

Gary,

Please note that one (1) "wet" and two (2) copies of the referenced shop drawing submittals have been hand-delivered to Tim Daszko at WDC.

Attachment #5 (2/2)

The response will be uploaded to PMIV as well.

Regards,

Nhan Vo, P.E.
T.Y. Lin International

Attachment #6 (1/8)

TY LIN INTERNATIONAL / MOFFATT & NICHOL — a joint venture

SFOBB – SAS Project
Two Harrison Street, Suite 500, San Francisco, CA 94105
Telephone (415) 291-3700 Facsimile (415) 433-0807

MIKE - PLEASE REVIEW. THANKS, SCOTT 11/3/08

CCO SUBMITTAL

SFOBB SAS Project # 04-0120F4

RECEIVED NOV 0 3 2008 BY:

To: Caltrans Construction
333 Burma Road
Oakland, CA 94607

Attn: Rick Morrow

Date: October 31, 2008

Contract No: 04-0120F4
04-SF-80-13.2, 13.9

Job Name: SAS Project – SFOBB

CCO No.: 44 (Update 10/31/08)

Subject: Barrier Modifications

CCO Comments:

***** Per Caltrans direction (B. Shedd email dated 10/21/08), this revision includes the modification of plan sheet 904R3, 905R4, and 908R1. These plan sheets reflect the removal of nut caps and the addition of double nuts for the light pole mounting. Also, the bolt pattern for the sign support has been modified to match the "Road Plans". *****

***** Per Caltrans direction (S. Fabel email dated 09/10/08), this update includes the modification of plan sheet 904R3, 905R4, and 908R1. These plan sheets reflect the removal of references to nut keepers, as Caltrans has determined that adequate access is available within the luminaire support based on the mockup. *****

***** Per Caltrans direction (METS – R. Mertz verbal comment dated 08/22/08), this revision includes the modification of plan sheet 904R3, 905R4, and 908R1. These plan sheets reflect changing the connection of the nut to the base plate from a tack weld to a nut keeper. *****

***** Per Caltrans direction (S. Fabel email dated 08/19/08), this revision includes the addition of plan sheet 908R1. Plan sheet 908R1 has been removed from CCO #43 (Lighting Revisions) and incorporated into CCO #44. *****

***** Per Caltrans direction (M. Travis email note 7/14/08), this revision includes plan sheet 895. In CCO #44 some of the Call Boxes were eliminated by Caltrans. This plan sheet eliminates a callout to a box that has been removed. Also, plan sheet 890R2 is being resubmitted to account for the removal of earlier CCO revision markers (M. Travis cleanups). *****

***** Per Caltrans direction (S. Fabel email note 6/6/08, updated RFI-CCO Hopper), this revision includes plan sheets affected by recent RFI's, including RFI 1092R0 and 1168R0 (M. Travis cleanups). In addition, plansheets have been updated to reflect recent revisions to RFI's, including 933R1. Cleanups have also been made based on RFI's 613R0, 681R0, and 897R0. Based on the Hopper list dated 6/6/08, all RFI's have been addressed. *****

***** Per Caltrans direction (G. Boughosn note 4/30/08), this update includes plan sheet 965R1, which reflects updates to utility details affected by RFI's 432R0, 530R0 and 743R0. *****

***** Per Caltrans direction, this update includes revisions based on RFI's 897R1 (the DJV response to 897R0 addressed the updates required for 897R1), 933R1 (please note that 933R0 was included in a previous submittal of CCO 44) and RFI 1064. These RFI's impact sheets 876, 889 and 966. Please note that sheet 966R2 is valid for this CCO; however, 966R2 was submitted earlier in CCO 42, and will be updated within CCO 42 at a future date (per Scott Fabel conversation 4/18/08). *****

***** Per Caltrans direction, this update includes revised detailing of plan sheet 903S1 (delivered as 903S1R1) based on**

PMIN Doc 505387

SFOBB – SAS Project
Two Harrison Street, Suite 500, San Francisco, CA 94105
Telephone (415) 291-3700 Facsimile (415) 433-0807

the response to RFI 1168R0 and the inclusion of Call Box Mounting based on PB's response to RFI 678R0. ***

***** Per Caltrans direction, this revision includes an additional cover plate detail on plan sheet 903S1. *****

***** Per Caltrans direction, this revision includes new supplemental plan sheet 903S1. This plan sheet includes railing details at Call Boxes for both steel and concrete barriers. *****

***** This update includes revisions to plan sheets 889R2, 890R2, 904R2 and 905R3. Per Caltrans instruction, this update includes revisions based on RFI's 565R3/R4 and RFI 933. In addition, minor cleanups previously discussed at the WDC are included for completeness. *****

***** This revision updates plan sheet 905R3 to plan sheet 905R2, thus eliminating plan sheet 905R2 from CCO #43. Per Caltrans instruction, this revision incorporates RFI's 302R0 and 464R0 on plan sheet 905R2, and eliminates the CCO 43 reference from the CCO block. In addition, the Barrier Fabrication Tolerance Specification update has been deleted. *****

***** This update includes modifications made in response to Caltrans and ABF comments at the Scoping meeting of Thursday 9/6/07. Per Caltrans direction, barrier 22 Dia A354 Gr. BC anchor rods have been designated as 22 Dia A354 Gr. BC anchor bolts. *****

Per Caltrans direction, this CCO has been prepared to address Barrier Modifications.

Per the Scoping meeting held on May 31, 2007 between Caltrans and the JV, the general content of this CCO was agreed upon, and its contents were reviewed by all. Further, a comprehensive note was produced on June 22 establishing the RFI's for which plan changes were agreed upon. A subsequent note on June 28th included additional RFI's to be treated within this CCO.

It is noted that the final Caltrans CCO request includes the following RFI's:

TYLI scope: 102R0, 103R0, 104R0, 104R1, 157R0, 202R0, 207R0, 222R0, 242R0, 301R0, 322R0 (no plan impact), 334R1, 490R0, 611R0, 612R0, 613R0, 678R1, 681R0. Per conversation with Brian Boal on 8/27/07, it was agreed to include RFI 839. Per discussion on 9/18/07 with Caltrans, RFI's 302R0 and 464R0 are incorporated onto sheet 905R2.

In addition, it has been identified that the following RFI's are to be done by PB:

157R1, 217R0, 217R1, 223R0, 245R0, 264R0, 264R1, 678R0. In order to ascertain the completeness of the CCO, it is recommended that Caltrans coordinate with PB the projected modified plan sheets.

Below, please find a list of drawings with their associated RFI's that have been included in this CCO:

Sheet No.	*RFI Number*
622R1	207
636R1	222
671R1	222
673R1	222
742R2	1092R0
876R2	611, 612, 613, 681, 897R0/R1
877R1	104R1, 681
878R2	613, 681R0, 897R0, 933R1
889R2	102, 157, 202, 222, 242, 301, 334R1, 613, 933R0/R1
890R2	102, 157, 202, 222, 301, 334R1, 490, 613, 678R1, 933
895R1	N/A
903R1	678R0
903S1R1	1168R0
904R3	103, 839, 565R3/R4, 1092R0

TY LIN INTERNATIONAL
MOFFATT & NICHOL
a joint venture

SFOBB – SAS Project
Two Harrison Street, Suite 500, San Francisco, CA 94105
Telephone (415) 291-3700 Facsimile (415) 433-0807

905R4	103, 302, 464, 839, 565R3/R4, 1092R0
908R1	N/A
965R1	432R0, 530R0, 743R0
966R2	242, 334R1, 839, 1064R0

Impact to Scope of Work: None.
Impact to Quantities: None

CCO Attachments:

Revised Plan Sheets: 622R1, 636R1, 671R1, 673R1, 742R2, 876R2, 877R1, 878R2, 889R2, 890R2, 895R1, 903R1, 903S1R1, 904R3, 905R4, 908R1, 965R1, and 966R2.

Reviewed By: J. Duxbury, A. Sanjines, A. Baumberger
QA/QC By: M. Nader

CC: File: TYLIN/MN-

T.Y.LIN INTERNATIONAL / MOFFATT & NICHOL ENGINEERS — a joint venture

Attachment #6 (4/8)

Memorandum

To: Caltrans Construction
333 Burma Road
Oakland, CA 94607

Date: 10/31/08
File: 04-0120F4
04-SF, Ala-80
SFOBB East Spans
SAS

Attn: Rick Morrow
Subject: CCO # 44 Barrier Modifications (Update 10/31/08)

It is requested that a contract change order be issued to incorporate the following changes:

PLANS:

Revised:

Plan Sheet	622R1	of 1204
Plan Sheet	636R1	of 1204
Plan Sheet	671R1	of 1204
Plan Sheet	673R1	of 1204
Plan Sheet	742R2	of 1204
Plan Sheet	876R2	of 1204
Plan Sheet	877R1	of 1204
Plan Sheet	878R2	of 1204
Plan Sheet	889R2	of 1204
Plan Sheet	890R2	of 1204
Plan Sheet	895R1	of 1204
Plan Sheet	903R1	of 1204
Plan Sheet	903S1R1	of 1204
Plan Sheet	**904R3**	of 1204
Plan Sheet	**905R4**	of 1204
Plan Sheet	**908R1**	of 1204
Plan Sheet	965R1	of 1204
Plan Sheet	966R2	of 1204

SPECIAL PROVISIONS:

N/A

ESTIMATE:

N/A

Any questions regarding this request should be directed to Marwan Nader at (415) 291-3731.

Regards,

T.Y. Lin International – Moffatt & Nichol (J.V.)

Marwan N. Nader, P.E.
Project Manager, SFOBB-SAS

Attachment #6 (5/8)

Enclosure
cc: James Duxbury, T.Y.Lin International
Alex Sanjines, T.Y.Lin International
Andrew Baumberger, T.Y.Lin International

Attachment #6 (6/8)

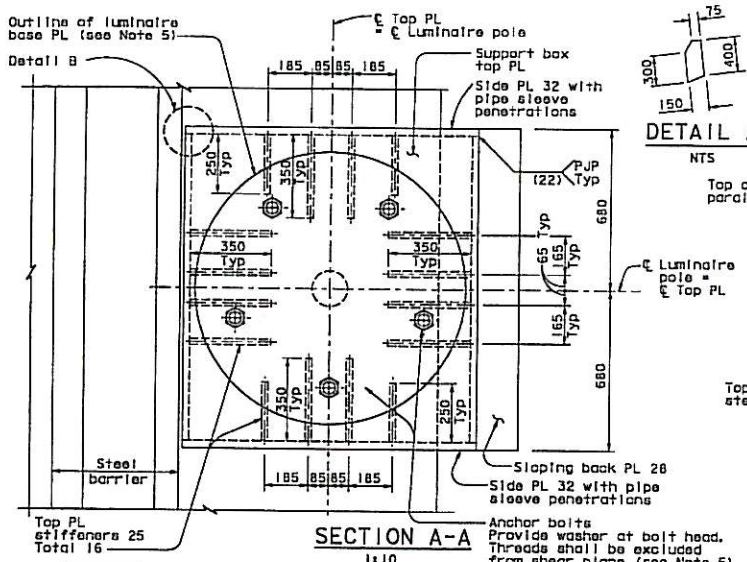

SECTION A-A
1:10

DETAIL A
NTS

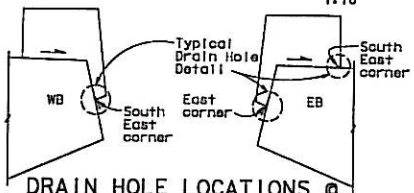

DRAIN HOLE LOCATIONS @ TYPICAL LUMINAIRE AND SIGN SUPPORT BOX
NTS

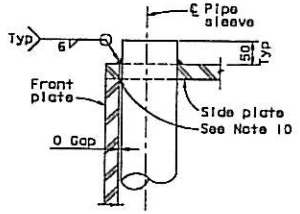

DETAIL B
1:5

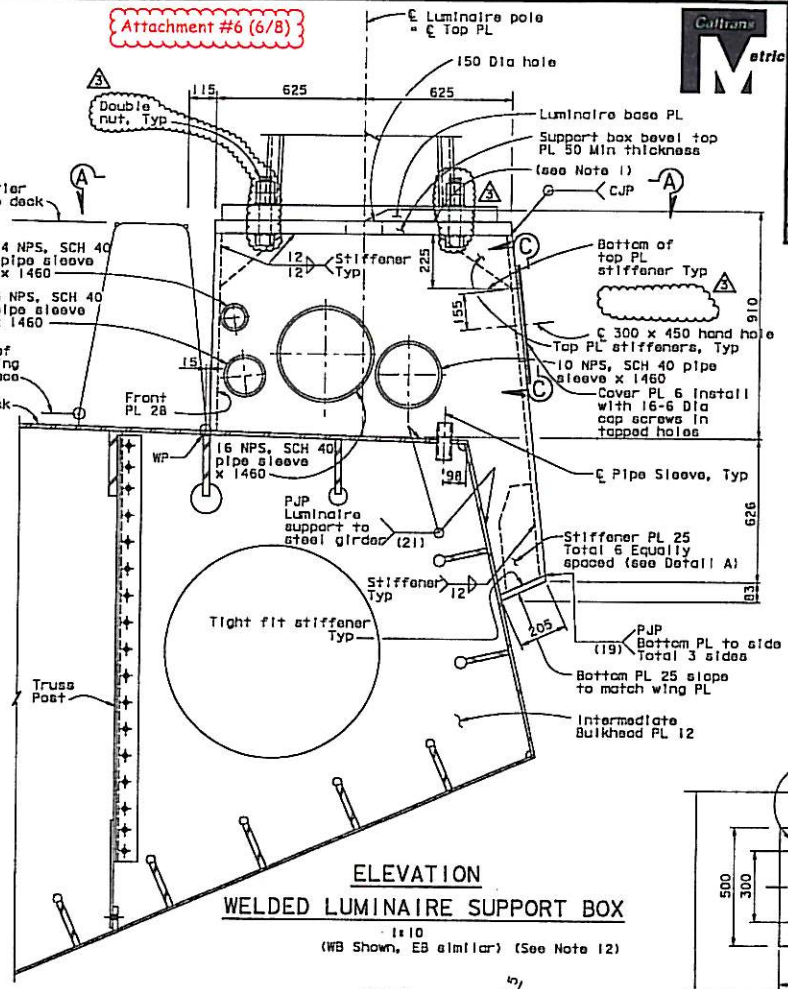

ELEVATION
WELDED LUMINAIRE SUPPORT BOX
1:10
(WB Shown, EB similar) (See Note 12)

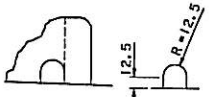

TYPICAL DRAIN HOLE DETAIL
1:2.5

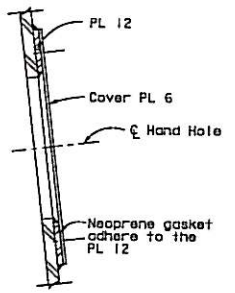

SECTION D-D
1:5

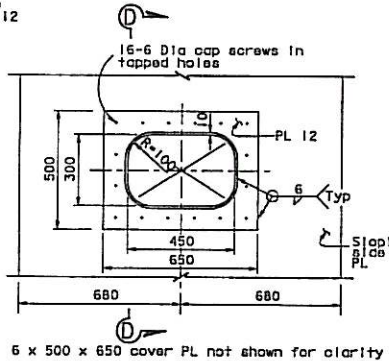

6 x 500 x 650 cover PL not shown for clarity

VIEW C-C
1:10

NOTES:
1. Surfaces of plates shall be milled level to ensure bearing.
2. For location of pipe sleeves, see "Road Plans".
3. The Contractor shall submit for approval by the Engineer details of conduit penetration through deck plate. Conduit penetration details shall be completely sealed to ensure no water leakage into support box.
4. For Geometry of luminaire base plate, conduit openings and locations of bolts, see "Road Plans".
5. For details of utilities opening through luminaire support box, see "Road Plans".
6. Pipe sleeves shall be completely sealed at support box side plates to ensure no water leakage into support box.
7. For location of luminaire, see "Road Plans" sheets.
8. Pipe sleeves shall typically be concentric with the carried utility line. For utility locations, see the "Road Plans". For 4 NPS pipe sleeve, place the sleeve with 0 gap at the face of support box front plate, and aligned vertically on the utility line.
9. The side plates are normal to the deck.
10. Grind weld flush at pipe sleeve.
11. Pipe sleeve locations for pedestals & PP 119 and sign post, see "Road Plans".
12. At locations where cable railing interferes with luminaire support box, terminate railing at eye bolts, each side of support box, subject to review and approval of the Engineer.

ALL DIMENSIONS ARE IN MILLIMETERS UNLESS OTHERWISE SHOWN

DIST.	COUNTY	ROUTE	KILOMETER POST TOTAL PROJECT	SHEET NO.	TOTAL SHEETS
04	SF	80	13.2/13.9	904R3	1204

REGISTERED ENGINEER - CIVIL
12-6-04
PLANS APPROVAL DATE
The State of California or its officers or agents shall not be responsible for the accuracy or completeness of electronic copies of this plan sheet.
Tien Hung Ho No. C 43990 Exp. 06/30/09 CIVIL STATE OF CALIFORNIA

T.Y. LIN / MOFFATT & NICHOL
825 BATTERY STREET
SAN FRANCISCO, CA 94111

Caltrans now has a web site! To get to the web site, go to: http://www.dot.ca.gov

REQUESTS FOR INFORMATION NOT ADDRESSED IN THIS CCO REMAIN IN FORCE

MARK	DATE	DESCRIPTION	BY	CH'D	CCO#
3	10/31/08	BARRIER MODIFICATIONS	GB	TH	44
2	08/13/08	BARRIER MODIFICATIONS	GB	TH	44
1	08/24/07	BARRIER MODIFICATIONS	GB	TH	44

REVISIONS

CONTRACT CHANGE ORDER NO. ____
SHEET ____ OF ____

R. Vallizadeh/Y. Tsai/Y.L./M.L./F.C.
DESIGN OVERSIGHT
SIGN OFF DATE 10/31/08
Rev. Date 8-12-08

DESIGN	BY T. Ho	CHECKED	C. Redfield
DETAILS	BY R. Xu	CHECKED	C. Redfield
QUANTITIES	BY C. Mauch	CHECKED	K. Cormier

ORIGINAL SCALE IN MILLIMETERS FOR REDUCED PLANS

PREPARED FOR THE STATE OF CALIFORNIA
DEPARTMENT OF TRANSPORTATION

R. Manzanarez
PROJECT ENGINEER

CU 04
EA 0120F1

BRIDGE NO. 34-0006L/R
KILOMETER POST 13.2/13.9

SAN FRANCISCO OAKLAND BAY BRIDGE
EAST SPAN SEISMIC SAFETY PROJECT
SELF-ANCHORED SUSPENSION BRIDGE
(SUPERSTRUCTURE & TOWER)

LUMINAIRE SUPPORT DETAILS NO. 1

DISREGARD PRINTS BEARING EARLIER REVISION DATES

REVISION DATES (PRELIMINARY STAGE ONLY)

SHEET 187R3

100 % PS&E
DATE PLOTTED => 31 OCT 2008 TIME PLOTTED => 10:41:33
USERNAME => DRAWN

Attachment #6 (7/8)

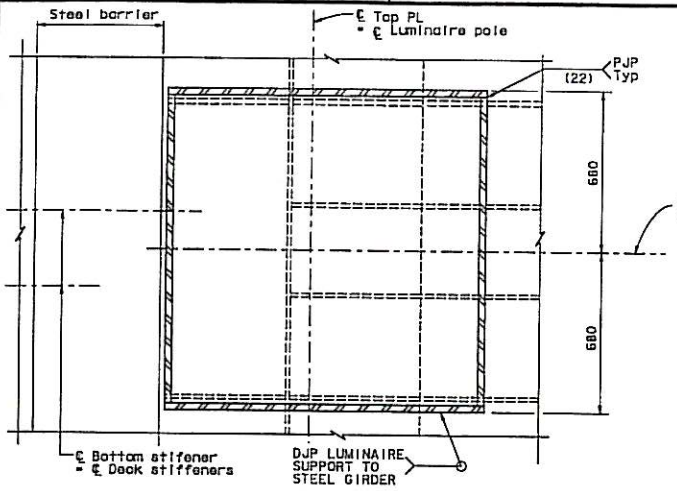

SECTION B-B
1:10

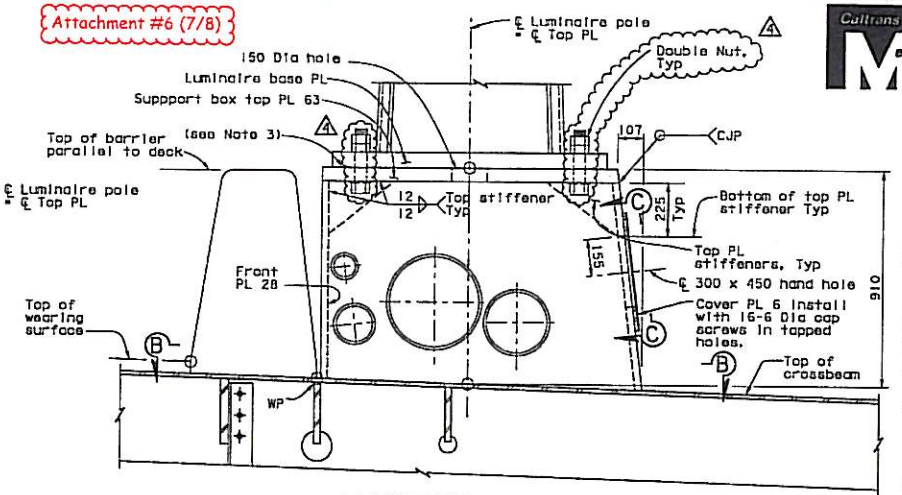

ELEVATION (OVER CROSSBEAM, WB shown, EB similar) (See Note 9)
WELDED LUMINAIRE SUPPORT BOX
1:10

REVISIONS				
MARK	DATE	DESCRIPTIONS	BY	CH'D	CCO#
4	10/31/08	BARRIER MODIFICATIONS	TH	JD	44
3	08/27/08	BARRIER MODIFICATIONS	TH	JD	44
2	08/26/08	BARRIER MODIFICATIONS	TH	JD	44
1	07/01/08	W2 CAP BEAM 150	JD	NV	23

REQUESTS FOR INFORMATION NOT ADDRESSED IN THIS CCO REMAIN IN FORCE

CONTRACT CHANGE ORDER NO. ___
SHEET ___ OF ___

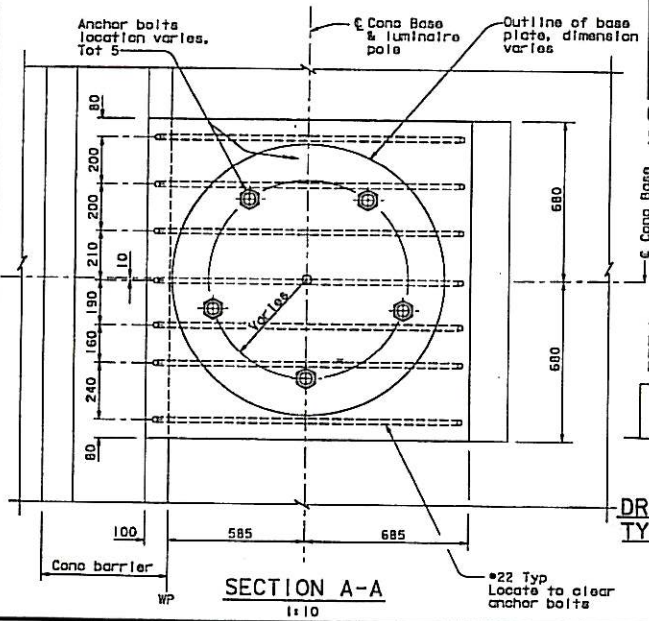

SECTION A-A
1:10

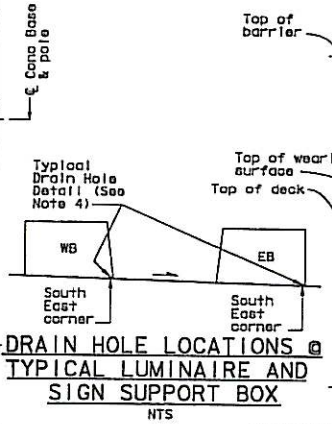

DRAIN HOLE LOCATIONS @ TYPICAL LUMINAIRE AND SIGN SUPPORT BOX
NTS

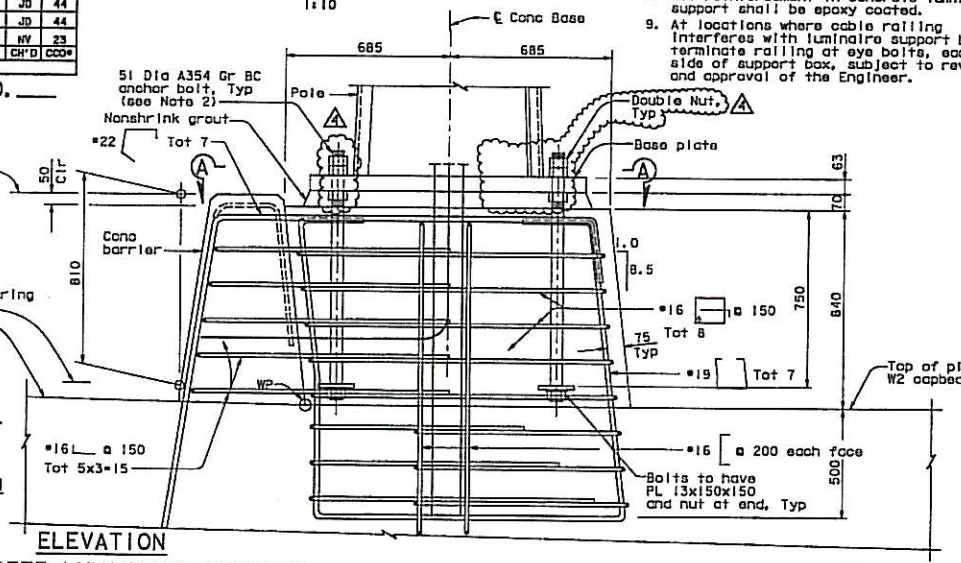

ELEVATION
CONCRETE LUMINAIRE SUPPORT
1:10

ALL DIMENSIONS ARE IN MILLIMETERS UNLESS OTHERWISE SHOWN

NOTES:
1. For dimensions and details not shown, see "Luminaire Support Details No.1" sheet.
2. Anchor rods at the base PL connection shall be tensioned to 0.5Fy.
3. Surfaces of plates shall be milled level to ensure bearing.
4. For View C-C and Typical Drain Hole Detail, see "Luminaire Support Details No.1" sheet.
5. The Contractor shall submit for approval by the Engineer details of conduit penetration through deck plate. Conduit penetration details shall be completely sealed to ensure no water leakage into support box.
6. For location of luminaire, see "Road Plans" sheets.
7. For geometry of luminaire base plate, conduit openings and location of bolts, see "Road Plans".
8. All reinforcement in concrete luminaire support shall be epoxy coated.
9. At locations where cable railing interferes with luminaire support box, terminate railing at eye bolts, each side of support box, subject to review and approval of the Engineer.

Caltrans Metric

DIST.	COUNTY	ROUTE	KILOMETER POST TOTAL PROJECT	SHEET NO.	TOTAL SHEETS
04	SF	80	13.2/13.9	905R4	1204

REGISTERED ENGINEER - CIVIL
12-6-04
PLANS APPROVAL DATE
The State of California or its officers or agents shall not be responsible for the accuracy or completeness of electronic copies of this plan sheet.
REGISTERED PROFESSIONAL ENGINEER Tien Hung Ho No. C 43990 Exp. 06/30/09 CIVIL STATE OF CALIFORNIA

T.Y. LIN / MOFFATT & NICHOL
825 BATTERY STREET
SAN FRANCISCO, CA 94111

Caltrans now has a web site! To get to the web site, go to: http://www.dot.ca.gov

100 % PS&E

DESIGN OVERSIGHT: R. Valizadeh/V. Toon/Y.L./K.L./F.C.
EOR SIGN OFF DATE: 10/31/08

	BY	CHECKED
DESIGN	T. Ho	C. Redfield
DETAILS	R. Xu	C. Redfield
QUANTITIES	C. Mauch	K. Cormier

PREPARED FOR THE STATE OF CALIFORNIA
DEPARTMENT OF TRANSPORTATION

R. Manzanarez
PROJECT ENGINEER

BRIDGE NO. 34-0006L/R
KILOMETER POST 13.2/13.9
CU 04
EA 0120F1

SAN FRANCISCO OAKLAND BAY BRIDGE
EAST SPAN SEISMIC SAFETY PROJECT
SELF-ANCHORED SUSPENSION BRIDGE
(SUPERSTRUCTURE & TOWER)

LUMINAIRE SUPPORT DETAILS NO. 2

SHEET 486R4

ORIGINAL SCALE IN MILLIMETERS FOR REDUCED PLANS 0 10 20 30 40 50 60 70 80 90 100

FILE => I:\sas\04-012001\scs\contract plans and ccos\ccos\in progress\cco#44\revised 10-31-08\con\ckinrdsc.dgn

DATE PLOTTED => 31 OCT 2008
TIME PLOTTED => 09:25:22
USERNAME => cwilcox

Attachment #6 (8/8)

DIST.	COUNTY	ROUTE	KILOMETER POST TOTAL PROJECT	SHEET NO.	TOTAL SHEETS
04	SF	80	13.2/13.9	908R1	1204

REGISTERED ENGINEER - CIVIL

12-6-04
PLANS APPROVAL DATE

The State of California or its officers or agents shall not be responsible for the accuracy or completeness of electronic copies of this plan sheet.

REGISTERED PROFESSIONAL ENGINEER Tien Hung Ho No. C 43990 Exp. 06/30/09 CIVIL STATE OF CALIFORNIA

T.Y. LIN / MOFFATT & NICHOL
825 BATTERY STREET
SAN FRANCISCO, CA 94111

Caltrans now has a web site! To get to the web site, go to http://www.dot.ca.gov

REQUESTS FOR INFORMATION NOT ADDRESSED IN THIS CCO REMAIN IN FORCE

MARK	DATE	DESCRIPTIONS	BY	CH'D	CCO#
1	10/31/08	BARRIER MODIFICATIONS	AS	TH	44

REVISIONS

CONTRACT CHANGE ORDER NO. ____
SHEET ____ OF ____

Caltrans Metric

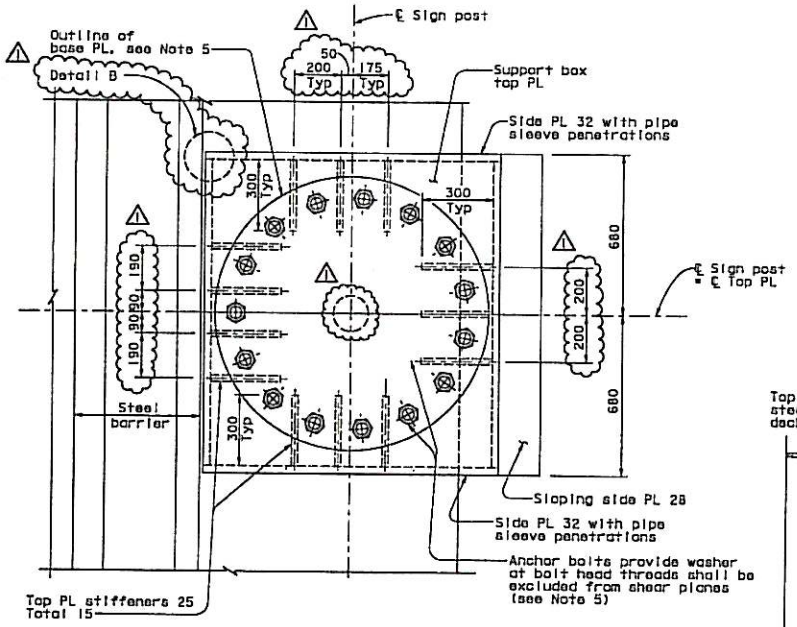

SECTION A-A
1:10

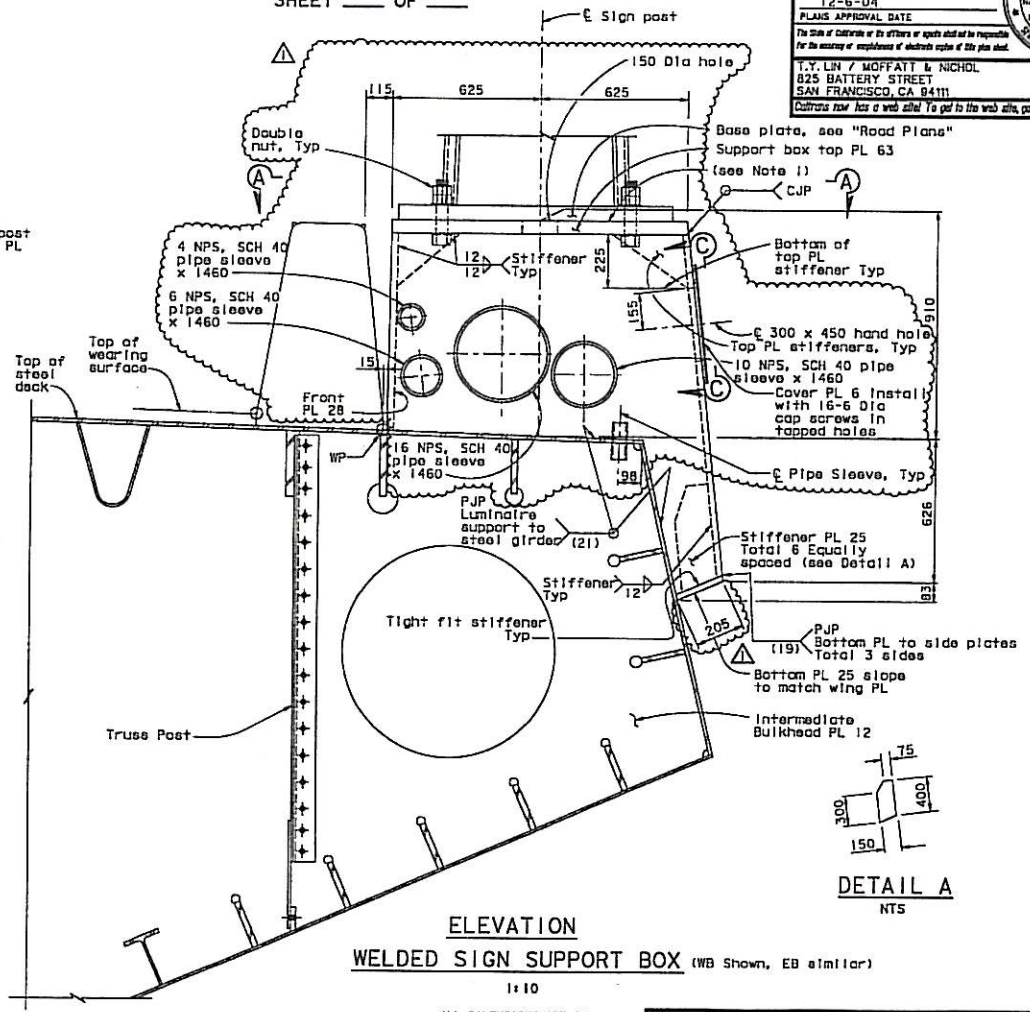

DETAIL A
NTS

ELEVATION
WELDED SIGN SUPPORT BOX (WB Shown, EB similar)
1:10

NOTES:

1. Surfaces of plates shall be milled level to ensure bearing.
2. For location of pipe sleeves, see "Road Plans".
3. The Contractor shall submit for approval by the Engineer details of conduit penetration through deck plate. Conduit penetration details shall be completely sealed to ensure no water leakage into support box.
4. For details of utilities opening thru sign support box, see "Road Plans".
5. For geometry of base plate, conduit opening and locations of bolts, see "Road Plans".
6. Pipe sleeves shall be completely sealed at support box side plates to ensure no water leakage into support box.
7. For Detail B, View C-C and drain hole locations, see "Luminaire Support Details No.1" sheet.

ALL DIMENSIONS ARE IN MILLIMETERS UNLESS OTHERWISE SHOWN

100 % PS&E

R. Valizadeh/V. Toan/Y.L./W.L./F.C.
DESIGN OVERSIGHT
SIGN OFF DATE 10/31/08

DESIGN	BY T. Ho	CHECKED	C. Redfield
DETAILS	BY R. Xu	CHECKED	C. Redfield
QUANTITIES	BY C. Mauch	CHECKED	K. Cormier

PREPARED FOR THE STATE OF CALIFORNIA DEPARTMENT OF TRANSPORTATION

R. Montezuma
PROJECT ENGINEER

BRIDGE NO. 34-0006L/R
KILOMETER POST 13.2/13.9

SAN FRANCISCO OAKLAND BAY BRIDGE
EAST SPAN SEISMIC SAFETY PROJECT
SELF-ANCHORED SUSPENSION BRIDGE
(SUPERSTRUCTURE & TOWER)

SIGN SUPPORT DETAILS

CU 04
EA 0120F1

DISREGARD PRINTS BEARING EARLIER REVISION DATES

SHEET 491R1

FILE => L:\SB\04-012001\SAS\Contract Plans and CCO\CCO\In Progress\CCO#44\REVISED 10-31-08\DGN\cksd01.dgn