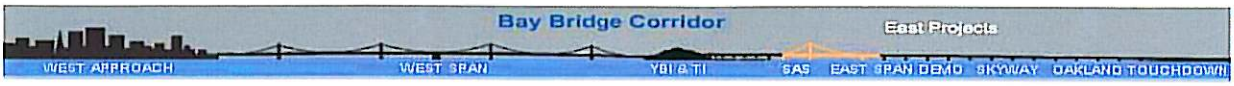

STATE OF CALIFORNIA - DEPARTMENT OF TRANSPORTATION

ENGINEER'S DAILY REPORT

LAN Engineering Consultant

REPORT NO.	DATE	
272 {7-day}	September 11, 2007	M T W T F S S (DAY)
NORMAL WORK HOUR: START: 7:00AM STOP: 3:30PM		WEATHER: OVERCAST/SUNNY
LOCATION : Construction Field Office : 333 Burma Road, Oakland 94607 Working Drawing Campus Office : 375 Burma Road, Oakland 94607		

04-SF-80-13.2/13.9
Contract No. 04-0120F4
{SAS Superstructure}

Caltrans Supervisor:
Gary Lai
Senior Bridge Engineer

Office Work:

- **Pre-Design MEP Coordination Meeting (Caltrans - PB) (0930):**
  - Covered the agenda items for the preparation for the team MEP meeting for 10:00 AM.
  - Responses to RFI # 897 – Need to determine who is Tom Ho's replacement while he is on vacation to determine how will verify the changes to the deck conflict issues in RFI # 897.

- **Design MEP Coordination Meeting (Caltrans – PB – T.Y. LIN - Contractor) (1000):**
  - Covered the agenda items developed by the contractor. The following key items were discussed:
    - 3D model conflicts and a meeting was set up at 1:00 to cover these conflicts.
    - RFI's still pending, returned and new ones being submitted.
    - Submittals being processed, returned and ones with issues. Nameplate issues in the seismic junction box submittal. Submittals 174, 175 and 176 being revised were also discussed.
    - Imbeds that are to be installed in W2 were discussed as to inspection procedure, layout, and integrations in the contract.
    - PMIV process and working with it was also covered in the meeting.
    - Contractor indicated the start of lift 3-4 area start of fabrication will be starting shortly.

- **3-D Model conflict issue Meeting in AB Office (1300) (Contractor – PB-Caltrans – Electrical Sub-Contractor).**
  - The following issues were discussed during the meeting and working with the 3-D model:

- The conduits were traced and conflicts were addressed by electrical sub and PB.
- Pulls radius were shown exceeding requirements so solutions need to be proposed. Pull boxes, wire ways, pulling fittings and alternated routing was discussed with no conclusions made.
- Support and mounting of conduits at a high elevation was brought up but no solutions were made. This needs to be key issues for the conduits at elevation 53.85.
- I found out there was an issues with the grounding cables at this elevation because no conduits were shown for the protection of the ground cable being routed through this elevation. See recommendation email sent today covering these items.

❖ **3-D meeting issue on the ground cable routing @ 53.85 elevation.**
Subject: Bare copper ground cable exposure outside structure.

- Sent an email to Bill Shedd indicating my concerns on routing bare copper ground cables outside the structure in a marine environment at elevation 53.85. See attachment #1.
- The RFI covering this item is RFI # 564. See attachment #2.
- The contract plan sheet 270/1204 covering this issue. See attachment #3.

❖ **Electrical CCO # 42 Review.**

- Continued my review of CCO # 42.
- Talked to Darryl Schram about the CCO guidelines and how the design group was submitting the recommended change order #42. He stated that the guidelines and policy has been established and can only change if there is approval from the complete management group of Caltrans for this project.

Any questions or comments you can reach me at (916) 919-7158. My E-Mail address is Mike.Travis@LANEngineering.com or Michael_Travis@dot.ca.gov

END OF REPORT

ATTACHMENTS:

1. **Email to Bill Shedd recommending bare copper ground cable outside structure to be installed in conduit.**
2. **Copy of RFI # 564.**
3. **Copy of contract plan sheet 270/1204.**

SIGNATURE

Name	TITLE
Michael F. Travis	Electrical Engineer – LAN Engineering

Attachment #1 (1/1)

Michael Travis/HQ/Caltrans/CAGov
09/11/2007 05:20 PM

To Bill Shedd/D04/Caltrans/CAGov@DOT
cc Gary J Lai/D04/Caltrans/CAGov@DOT
bcc Michael Travis/HQ/Caltrans/CAGov@DOT
Subject SAS Tower 3-D Model Meeting - Issues on Grounding Cables

Bill,

During the meeting this afternoon while going through the 3D model for the electrical conduits at elevation 53.85 I discovered a problem with the routing of the Ground Cables from the tower base.
The plate penetrations on the A-Plate on the NE, SW and NW towers have a 27mm hole for the cable to be routed through.
I don't think we want a bare copper cable coming out of the tower structure and go to the box on the southwest section of the elevation 53.85 grating area.
Exposed copper in a marine environment is not a good idea especially the main grounding cable at the tower structure.

I would recommend having all the ground cables installed in conduit outside the tower structure.
The doubler plates only have a 27mm opening for the cables.
I would enlarge the opening and install a conduit system for the ground cable outside the structure.

In RFI # 564 the issue of having the bare copper cable on the exterior of the tower was addressed.
The ground cable was getting installed inside the structure at elevation 3.0.
The cables at elevation 53.85 has the cable still being exposed out side the structure.

See attached RFI #564. : 04-0120f1_0270.pdf 500472-LT.pdf RFI564R00.pdf

Michael Travis
SFOBB Construction Offices
Design Campus Building
375 Burma Road
Oakland Ca. 94607
Phone: 510-808-4618

AMERICAN BRIDGE / FLUOR ENTERPRISES, A JV | Bay Bridge - SAS 04-0120F4

REQUEST FOR INFORMATION (RFI)

RFI No.: ABF-RFI-000564R00 **Submitted By:** Bausone, Christopher **Pages:**
Pages Attached:

RFI Date: 14-February-2007 **Contact Name:** Lee, Anna **Phone No.** 415-896-6072

Subject: Ground Cable to Tower Base	
References: 270R1	
Sub/Sup: BLI	**Sub RFI #:** 45
Response Required by: 23-February-2007	**Response affects critical path activity?** Yes

Description:

Penetrations have been provided through the girder (RFI 453, CWS6) for the 250 kcmil ground from the west girder to the NE and SW tower rebar. Revised sheet 270 provided with RFI 252 shows both grounds running vertically on the exterior of the D plate down to Elev 3 where it is connected to the footing rebar via a pigtail furnished by others.

1. Please confirm that it is acceptable to run the ground on the exterior of the tower.
2. Please provide the connection detail to the skin plate. Is it exothermically welded to the tower at intervals?
3. Please confirm the location of the pigtail furnished by others. Is it exterior of the tower leg in the vicinity of the D plate? If it is inside the tower leg, what is the route through the various plates?

Contractor Disposition:

This RFI is being submitted for

The Cost and Time Impact from this RFI is: Not selected

Response: **Agreed Ext. Due Date:**

Pages: 1
Pages Attached: 5

1. Ground should not run on the exterior of the tower. Refer to item 3 for solution.

2. Ground should not be exothermically welded and connected to the skin of the tower. Refer to item 3 for solution.

3. The grounding pigtails at the T1 foundation shown on sheet 12 of 118 (Contract 04-0120E4) have not been installed as confirmed by CT and the E2 & T1 contractor. Based on sheet 12 of 118 document, the grounding pigtails are to be provided and installed by E2 & T1 contractor outside the tower skirt. However, to facilitate the installation of tower grounding conductor, we have requested that these pigtails be placed and to stub up inside the tower SW and NE quadrants as specified on the attached redlines of sheet 12 of 118. These locations will allow the grounding conductors to be routed within the tower without penetrating the lower tower skirt plate and the exterior skin plate.
The two 250 Kcmil ground conductors shown at elevation 53.0 m will be routed within the tower as shown on redlines sheet 270 of 1204. One ground conductor will penetrate the tower skin plate A of the SW quadrant and will be routed through the SW quadrant diaphragm utility openings down to the T1 foundation area at elevation 3.0 m. The other ground conductor will penetrate the tower skin plate A of the NE quadrant and will be routed through the NE quadrant diaphragm utility openings down to the T1 foundation area at elevation 3.0 m.

REQUEST FOR INFORMATION (RFI)

Ground conductors will be spliced to the grounding pigtails located at elevation 3.0 m using exothermic connection or equal (see redlines sheet 249 0f 1204).
Ground conductors support method shall be based on using mechanical connector Burndy Type GD (RFI 565-SK-1) and attached to conduit at no more than 2 m spacing. In addition, ground conductors shall be bonded to all cable trays inside the tower quadrants (see redlines sheet 270 of 1204) using Burndy Type GC-CT (RFI 565-SK-2) with a minimum of one bonding per cable tray section.
The above response also covers item # 5 (ground conductor) of RFI 543.

Administrative Action:

This response resolves the RFI. There is no cost or time impact. No further action required.

Date: 20-March-2007	**Respondent:** Hart, Grady	**Phone No.: 510-286-0477**

Attachment #2 (3/5)

DIST	COUNTY	ROUTE	KILOMETER POST TOTAL PROJECT	SHEET No	TOTAL SHEETS
04	SF	80	13.2/13.9	270	1204

12/19/02
REGISTERED ELECTRICAL ENGINEER DATE

12-6-04
PLANS APPROVAL DATE

FB POWER, Inc.
A Parsons Brinckerhoff Company
303 Second St., Suite 700N
San Francisco, CA 94107-1317

The State of California or its officers or agents shall not be responsible for the accuracy or completeness of electronic copies of this plan sheet.

Caltrans now has a web site! To get to the web site, go to http://www.dot.ca.gov

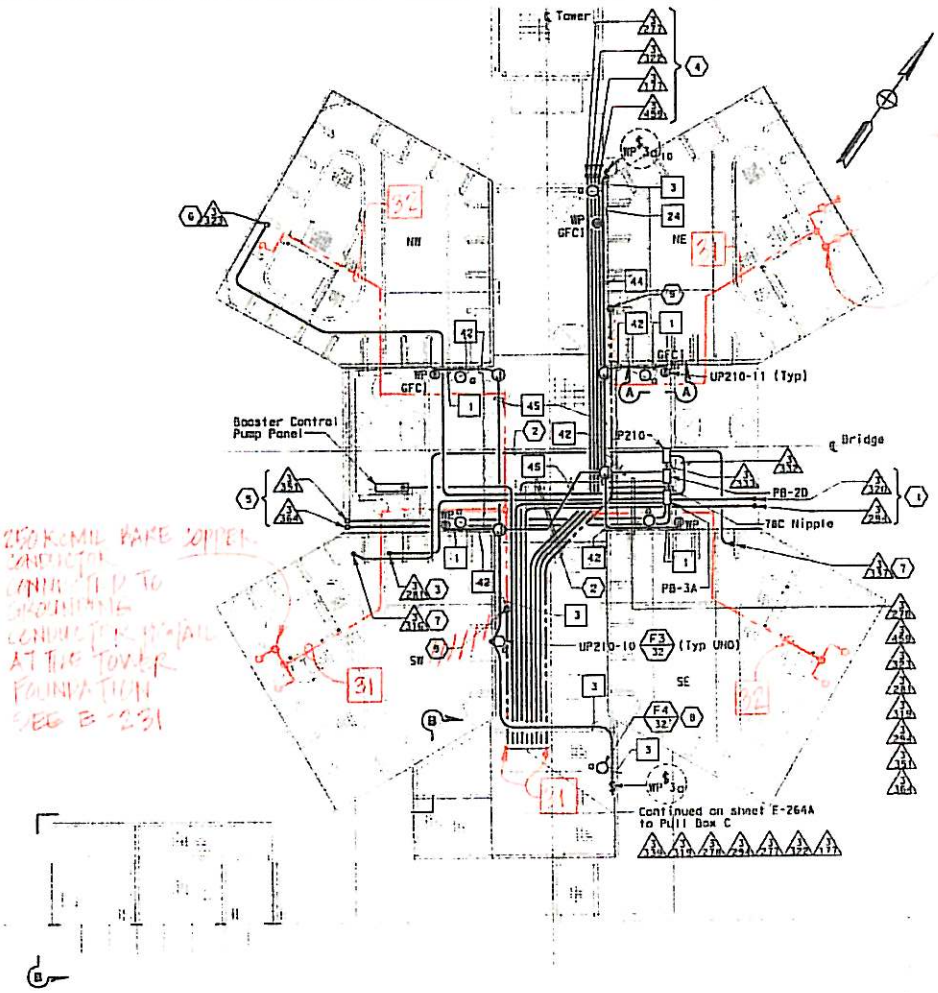

250 KCMIL BARE COPPER CONDUCTOR CONNECTED TO GROUNDING CONDUCTOR INSTALL AT THE TOWER FOUNDATION SEE E-231

PP 41

PP 42

WALKWAY AND ACCESS PLATFORM TO "E" LINE GIRDER AT ELEV 53.85 m

SCALE 1:40

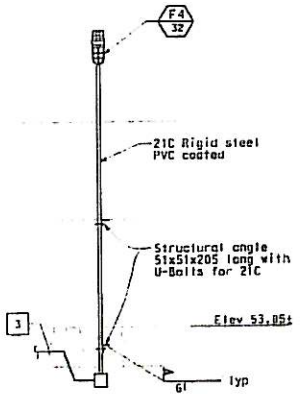

DETAIL 1

NO SCALE

SHEET NOTES:

1. For continuation to Dehumidification Unit #2 blower, see sheet E-287.
2. All conduits which thereafter cross the access walkways shall be raised to a level of at least 2438 above the grating to pass overhead, allowing free walkways on the remaining three quadrants of the platform. Door on north face of SE tower shaft shall remain accesible.
3. Down to elev. 3.0 m, see sheet E-231.
4. Down to Pier 1 tower elevator pit. See sheet E-265
5. For continuation, see sheet E-285.
6. Conduit up to Dehumidification Unit #5 located on elev 158.0. For continuation, see sheets E-285, E-286 and E-287.
7. For continuation, see sheet E-266.
8. See Detail 1, this drawing.
9. 250 kcmil Copper conductor down to tower footing and exothermically welded to rebar system.

NOTES:

1. References:
   - For typical conduit installation details, see sheet E-268.
   - For utility panel UP-210 schedule, see sheet E-278.
   - For types of pull boxes, splice boxes and enclosures, see sheets E-83 and E-169.
   - For conduit and cable tray schedules, see sheets starting at E-401.
   - For lighting fixture schedule, see sheet E-273.
   - For vertical conduit runs support system, see sheet E-287.
   - For Section A-A, see sheet E-285.
   - For lighting installation details, see sheet E-267.
2. Electrical conduits shall enter the tower shafts between stiffeners A3 and A4 only. For conduit entry details, see Structural Utility drawings.
3. All conduits and fittings routed exposed at grating shall be rigid galvanized steel, PVC coated.
4. Fixture mounting height elevation shall be 2.125 m above floor/platform elevation UNO.
5. For other related work not shown on this sheet, see Electrical Special Provisions.
6. For Section B-B, see sheet EE-264A.
7. Typical conduit installation. See Detail 8, sheet E-268.

DETAILS
TOWER AND SUSPENSION CABLE TOWER POWER AND LIGHTING

SCALE AS NOTED

RFI 064 KG 3/15/07

E-264

STATE OF CALIFORNIA - DEPARTMENT OF TRANSPORTATION

Caltrans

DESIGN OVERSIGHT: BEHZAD GOLEMOHAMMADI

CALCULATED/DESIGNED BY: FK | DATE: 10/01 | REVISED BY

CHECKED BY: EDC | DATE REVISED

THIS PLAN ACCURATE FOR ELECTRICAL WORK ONLY.

ALL DIMENSIONS ARE IN MILLIMETERS UNLESS OTHERWISE SHOWN.

FOR REDUCED PLANS ORIGINAL SCALE IS IN MILLIMETERS

CU 04251

EA 0120F1

00-00-00 DATE PLOTTED = 10-DEC-2004 TIME PLOTTED = 05:55

Attachment #2 (4/5)

DIST	COUNTY	ROUTE	KILOMETER POST TOTAL PROJECT	SHEET No.	TOTAL SHEETS
04	SF	80	13.4, 13.8	12	118

REGISTERED ELECTRICAL ENGINEER DATE 11/05/02

10-15-03
PLANS APPROVAL DATE

FB POWER, Inc.
A Parsons Brinckerhoff Company
303 Second St., Suite 700N
San Francisco, CA 94107-1317

The State of California or its officers or agents shall not be responsible for the accuracy or completeness of electronic copies of this plan sheet.

Caltrans now has a web site. To get to the web site, go to http://www.dot.ca.gov

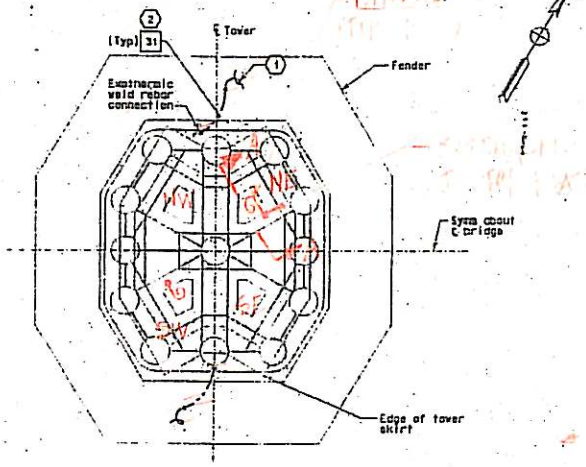

FOOTING GROUNDING PLAN
SCALE: 1:200

SHEET NOTES:

1. The Contractor shall provide 5000 mm long pigtail for connection by others under a separate contract.
2. Install ground conductor a minimum of 800 mm below surface.

GENERAL NOTES:

1. For additional notes see sheet E-1.

KFI 5/04
RG 03/15/07

(FOR INFORMATION ONLY)

TI FOUNDATION AND PIER
GROUNDING INSTALLATION
SCALE AS NOTED

E-3

STATE OF CALIFORNIA - DEPARTMENT OF TRANSPORTATION
Caltrans

DESIGN OVERSIGHT: BENZAD COLEMOHAMMADI

CALCULATED/DESIGNED BY: BC | DATE: 10/20 | REVISED BY: JJ | DATE REVISED: 10/20/03
CHECKED BY: EC | DATE: 8/03 | REVISED: 10/20/03

THIS PLAN IS ACCURATE FOR ELECTRICAL WORK ONLY.

ALL DIMENSIONS ARE IN MILLIMETERS UNLESS OTHERWISE SHOWN.

FOR REDUCED PLANS ORIGINAL

DCN FILE =14d130ed3.dgn

CU 04751 | EA 012051

Attachment #2 (5/5)

DIST	COUNTY	ROUTE	KILOMETER POST TOTAL PROJECT	SHEET No	TOTAL SHEETS
04	SF	80	13.2/13.9	249	1204

12/19/02
REGISTERED ELECTRICAL ENGINEER DATE

12-6-04
PLANS APPROVAL DATE

PB POWER, Inc.
A Parsons Brinckerhoff Company
303 Second St., Suite 700N
San Francisco, CA 94107-1317

The State of California or its officers or agents shall not be responsible for the accuracy or completeness of electronic copies of this plan sheet.

Caltrans now has a web site! To get to the web site, go to http://www.dot.ca.gov

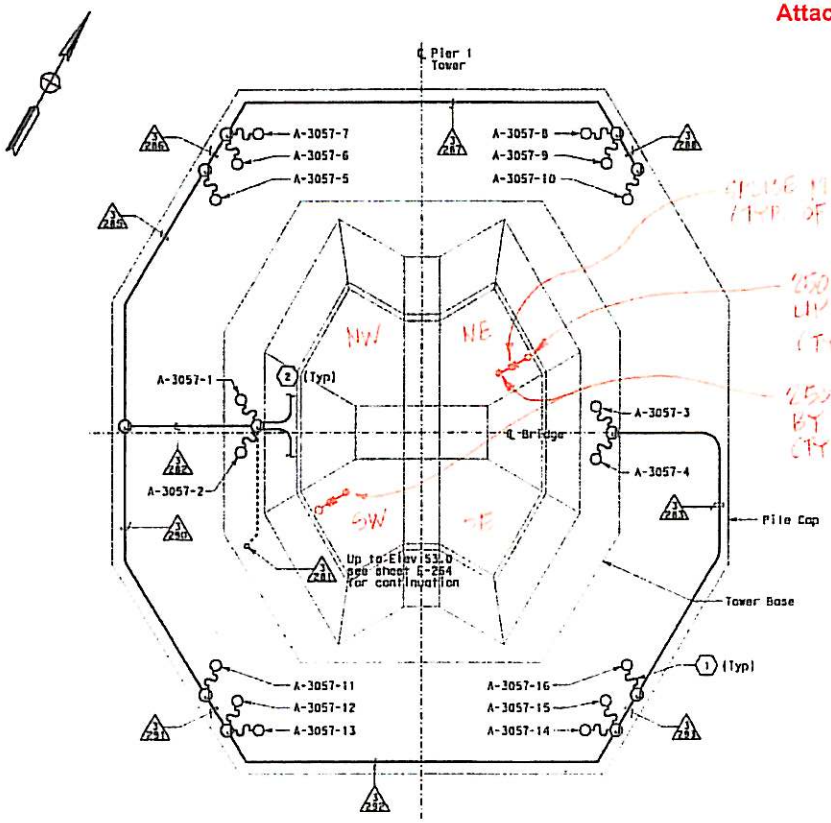

CRUISE INSTALL USING EXOTHERMIC CONNECTION (TYP. OF 2)

250 KCMIL BARE COPPER CONDUCTOR UP TO ELEV. 53.85m, SEE E-264 (TYP. OF 2)

250 KCMIL GROUND CONDUCTOR INSTALLS BY OTHERS (TYP. OF 2)

PLAN AT ELEV. 3.0
SCALE 1:125

NOTES:

1. References:
   - For 480 V Pier 1 tower lighting wiring diagram, see sheet E-250.
2. For circuit and conduit/cable tray schedules, see sheets starting at E-401.
3. For location plan of marker lights type MAP, see sheet E-227.
4. For other related work not shown on this sheet, see Electrical Special Provisions.

SHEET NOTES:

(1) Supplied with lighting fixture assembly.
(2) Continue to sump pump shown on E-266.

PIER 1 TOWER - LIGHTING SCHEDULE

Fixture Number	Location	Light Fixture Type	Number/ Wattage	Remarks
A-3057-1	Inside Pylon	MAU-2A	1-400 W	With Remote Ballast
A-3057-2	Inside Pylon	MAU-2A	1-400 W	With Remote Ballast
A-3057-3	Inside Pylon	MAU-2A	1-400 W	With Remote Ballast
A-3057-4	Inside Pylon	MAU-2A	1-400 W	With Remote Ballast
A-3057-5	Base (North)	MAR-2A-PB	1-400 W	
A-3057-6	Base (North)	MAR-2-PB	1-400 W	
A-3057-7	Base (North)	MAR-2A-PB	1-400 W	
A-3057-8	Base (North)	MAR-2A-PB	1-400 W	
A-3057-9	Base (North)	MAR-2-PB	1-400 W	
A-3057-10	Base (North)	MAR-2A-PB	1-400 W	
A-3057-11	Base (South)	MAR-2A-PB	1-400 W	
A-3057-12	Base (South)	MAR-2-PB	1-400 W	
A-3057-13	Base (South)	MAR-2A-PB	1-400 W	
A-3057-14	Base (South)	MAR-2A-PB	1-400 W	
A-3057-15	Base (South)	MAR-2-PB	1-400 W	
A-3057-16	Base (South)	MAR-2A-PB	1-400 W	
A-3008	Top of Pylon	MAP	1-1000 W max. at 120 V, w/ lamp changer	

TOWER AND SUSPENSION CABLE
LIGHTING AND ELECTRICAL SYSTEMS
SCALE AS NOTED

KFI 564 03/15/07

E-231

STATE OF CALIFORNIA - DEPARTMENT OF TRANSPORTATION
Caltrans

DESIGN OVERSIGHT: BEHZAD GOLEMOHAMMADI
CALCULATED/DESIGNED BY: FK | DATE: 10/01
CHECKED BY: EDC | DATE: 1/01
REVISED BY: AB | DATE REVISED: 2/04

THIS PLAN IS ACCURATE FOR ELECTRICAL WORK ONLY.

ALL DIMENSIONS ARE IN MILLIMETERS UNLESS OTHERWISE SHOWN.

FOR REDUCED PLANS ORIGINAL SCALE IS IN MILLIMETERS

CU 04251 | EA 0120F1

PLOTTED BY: 10-DEC-2004
PLOTTED BY: 05:26

Attachment #3 (1/1)

DIST	COUNTY	ROUTE	KILOMETER POST TOTAL PROJECT	SHEET NO	TOTAL SHEETS
04	SF	80	13.2/13.9	270	1204

Caltrans Metric

12/19/02
REGISTERED ELECTRICAL ENGINEER DATE

12-6-04
PLANS APPROVAL DATE

PB POWER, Inc.
A Parsons Brinckerhoff Company
303 Second St., Suite 700N
San Francisco, CA 94107-1317

JENS ERLINGSSON No. 8249 Exp. 9/30/06 ELECTRICAL — REGISTERED PROFESSIONAL ENGINEER — STATE OF CALIFORNIA

The State of California or its officers or agents shall not be responsible for the accuracy or completeness of electronic copies of this plan sheet.

Caltrans now has a web site! To get to the web site, go to http://www.dot.ca.gov

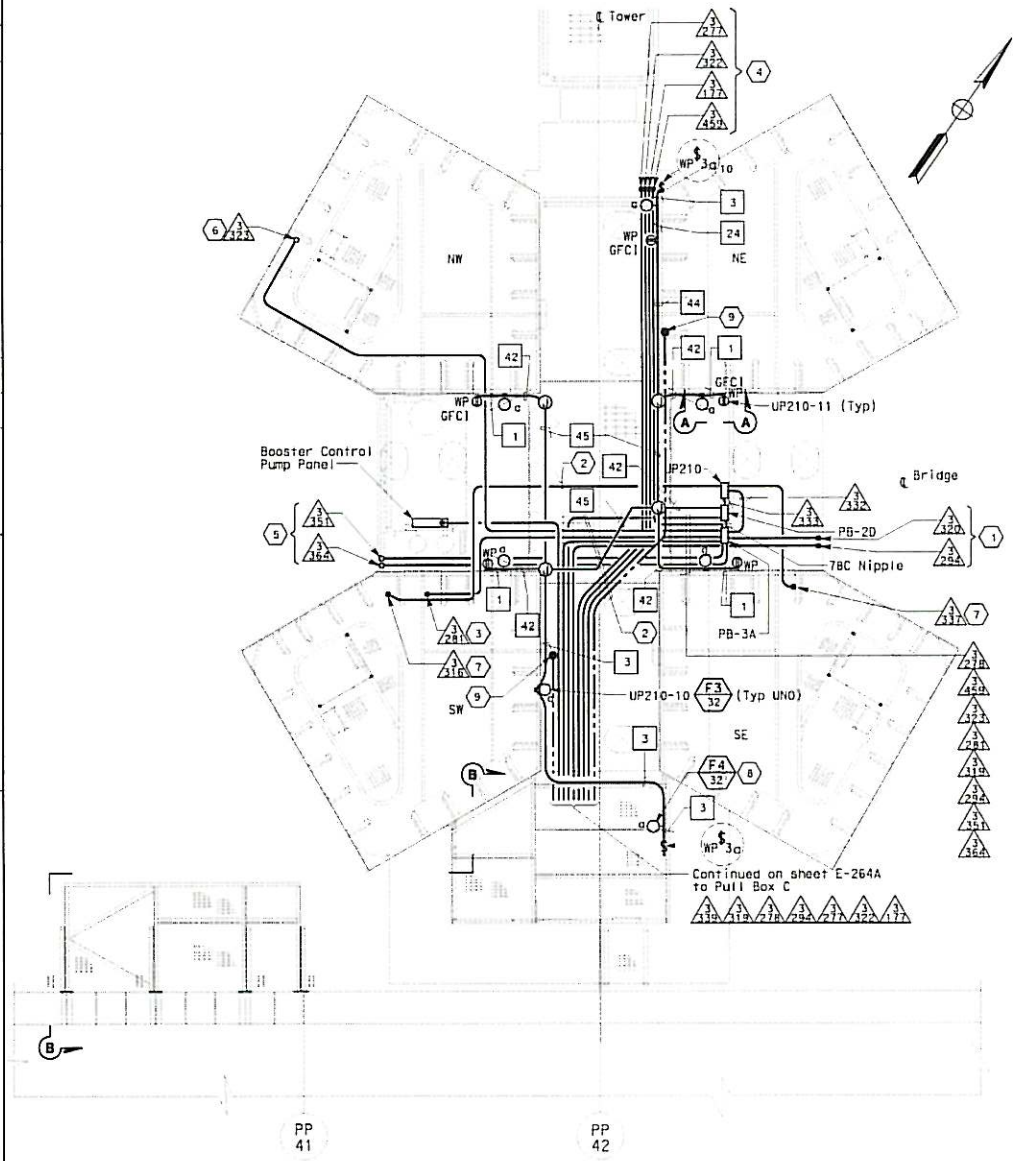

WALKWAY AND ACCESS PLATFORM TO "E" LINE GIRDER AT ELEV 53.85 m

SCALE 1:40

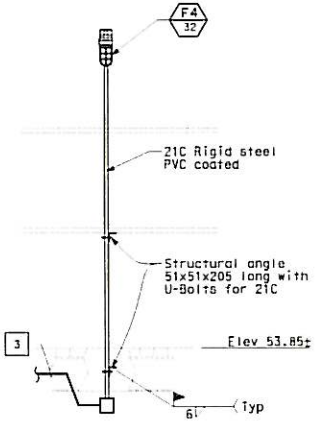

DETAIL 1

NO SCALE

SHEET NOTES:

1. For continuation to Dehumidification Unit #2 blower, see sheet E-287.
2. All conduits which thereafter cross the access walkways shall be raised to a level of at least 2438 above the grating to pass overhead, allowing free walkways on the remaining three quadrants of the platform. Door on north face of SE tower shaft shall remain accesible.
3. Down to elev. 3.0 m, see sheet E-231.
4. Down to Pier 1 tower elevator pit. See sheet E-265
5. For continuation, see sheet E-285.
6. Conduit up to Dehumidification Unit #5 located on elev 158.0. For continuation, see sheets E-285, E-286 and E-287.
7. For continuation, see sheet E-266.
8. See Detail 1, this drawing.
9. 250 kcmil Copper conductor down to tower footing and exothermically welded to rebar system.

NOTES:

1. References:
   - For typical conduit installation details, see sheet E-268.
   - For utility panel UP-210 schedule, see sheet E-278.
   - For types of pull boxes, splice boxes and enclosures, see sheets E-83 and E-169.
   - For conduit and cable tray schedules, see sheets starting at E-401.
   - For lighting fixture schedule, see sheet E-273.
   - For vertical conduit runs support system, see sheet E-287.
   - For Section A-A, see sheet E-285.
   - For lighting installation details, see sheet E-267.
2. Electrical conduits shall enter the tower shafts between stiffeners A3 and A4 only. For conduit entry details, see Structural Utility drawings.
3. All conduits and fittings routed exposed at grating shall be rigid galvanized steel, PVC coated.
4. Fixture mounting height elevation shall be 2.125 m above floor/platform elevation UNO.
5. For other related work not shown on this sheet, see Electrical Special Provisions.
6. For Section B-B, see sheet EE-264A.
7. Typical conduit installation. See Detail 8, sheet E-268.

DETAILS
TOWER AND SUSPENSION CABLE
TOWER POWER AND LIGHTING

SCALE AS NOTED

E-264

STATE OF CALIFORNIA - DEPARTMENT OF TRANSPORTATION
Caltrans

DESIGN OVERSIGHT: BEHZAD GOLEMOHAMMADI
CALCULATED/DESIGNED BY: FK — DATE: 10/01
CHECKED BY: EDC — DATE: 11/01
REVISED BY
DATE REVISED

THIS PLAN ACCURATE FOR ELECTRICAL WORK ONLY.

ALL DIMENSIONS ARE IN MILLIMETERS UNLESS OTHERWISE SHOWN.

FOR REDUCED PLANS ORIGINAL SCALE IS IN MILLIMETERS 0 20 40 60 80

DGN FILE => 40120f1ed264.dgn
USERNAME => lrlenard

CU 04251 | EA 0120F1

DATE PLOTTED => 10-DEC-2004
TIME PLOTTED => 05:55
00-00-00