ALIFORNIA
ENT OF TRANSPORTATION

CONTRACT CHANGE ORDER NO. 1 **SUPPL. --**

ROAD **SF-80-12.6/13.2** SHEET **1** OF **1** SHEETS

FEDERAL NO.(S) **ACBRIM-080-1(097)N** CONTRACT NO. **04-0120R4**

To **C.C. Myers, Inc.** Contractor

You are hereby directed to make the herein described changes from the plans and specifications or do the following described work not included in the plans and specifications on this contract.

NOTE: This change order is not effective until approved by the Chief Engineer.

Description of work to be done, estimate of quantities, and prices to be paid. Segregate between additional work at contract price, agreed price and force account. Unless otherwise stated, rates for rental equipment cover only such time as equipment is actually used and no allowance will be made for idle time.

This Change is requested by the **CONTRACTOR.**

The last percentage shown is the net accumulated increase or decrease from the original in the Engineer's Estimate.

EXTRA WORK @ FORCE ACCOUNT:

Maintain the roadway and provide additional traffic control for the sole convenience and direction of the public in accordance with Section 7-1.08, Public Convenience, of the Standard Specifications and as authorized by the Engineer.

Provide for the State's share of flagging costs in accordance with Section 12-2.02, Flagging Costs, of the Standard Specifications.

Estimated cost of Extra Work at Force Account .....$100,000.00.

Estimated Cost **Decrease** **$ 0.00** **or Increase** **$ 100,000.00**

By reason of this order the time of completion will be adjusted as follows:	**0 DAYS**

Submitted by: Kenneth Loncharich, Resident Engineer Date: 5-5-04

Approval Recommended: Kenneth Loncharich, Resident Engineer Date: 5-12-04

Approved by: Chief Engineer Date: 5/13/04

We, the undersigned contractor, have given careful consideration to the change proposed and hereby agree, if this proposal is approved, that we will provide all equipment, furnish all materials, except as may otherwise be noted above, and perform all services necessary for the work above specified, and will accept as full payment therefor the prices shown above.

Accepted, Date 5/7/04 Contractor **C.C. MYERS, INC.**

By Dewey C. Lee, Jr. Title **DEWEY C. LEE, JR. Contract Administrator**

If the contractor does not sign acceptance of this order, his attention is directed to the requirements of the specifications as to proceeding with the ordered work and filing a written protest within the time therein specified.

HC-5 Word(Rev.6/94)

STATE OF CALIFORNIA - DEPARTMENT OF TRANSPORTATION

CONTRACT CHANGE ORDER MEMORANDUM

DC-CEM-4903(OLD HC-39 REV 6/93) CT#7541-3544-0

DATE: **May 11, 2004**

TO: **Amer Bata, SFOBB Construction Manager**

FROM: **Kenneth Loncharich, Resident Engineer**

FILE
E.A. **04-0120R4**
CO-RTE-PM **SF-80-12.6/13.2**
FED NO. **ACBRIM-080-1(097)N**

CCO NO.	SUPPLEMENT NO.	CATEGORY CODE:
01	**--**	**AJZZ**

CONTINGENCY BALANCE (including this change): **$ 4,266,350.00**

$ 100,000.00 **INCREASE**

HEADQUARTERS APPROVAL REQUIRED? YES ☐ NO ☒

SUPPLEMENTAL FUND PROVIDED **$ 500,000.00**

IS THIS REQUEST IN ACCORDANCE WITH ENVIRONMENTAL DOCUMENTS? YES ☒ NO ☐

THIS CHANGE ORDER PROVIDES FOR:

1. Maintain the roadway and provide additional traffic control for the sole convenience and direction of the public in accordance with Section 7-1.08, Public Convenience, of the Standard Specifications and as authorized by the Engineer.

2. Payment for the State's share of flagging costs in accordance with Section 12-2.02, Flagging Costs, of the Standard Specifications.

This work will be performed under Extra Work at Force Account for an estimated cost of $100,000.00. Supplemental funds have been provided for the work of this change in the amount of $500,000.00.

No adjustment of the contract time is warranted, as this change does not affect the controlling operation.

Maintenance concurrence is not required as this work is temporary and anticipated by the contract documents.

The Resident Engineer recommends this change order be approved.

RECEIVED
12 NOV 96 00596

Amer, Bata, SFOBB CONSTRUCTION MANAGER — DATE	
DATE	
DATE	
DATE	
OTHER (Specify) — DATE	
DATE	
DIST PRIOR APPROVAL BY — DATE	
HQ (ISSUE & APPROVE) (TO PROCEED) BY — DATE	
Kenneth Loncharich, RESIDENT ENGINEER — DATE 5-12-04	

ESTIMATE OF COST 04

	THIS REQUEST	TOTAL TO DATE
ITEMS	$ 0.00	$ 0.00
FORCE ACCOUNT	$ 100,000.00	$ 100,000.00
AGREED PRICE	$ 0.00	$ 0.00
ADJUSTMENT	$ 0.00	$ 0.00
TOTAL	$ $ 100,000.00	$ $ 100,000.00

FEDERAL PARTICIPATION

☐ PARTICIPATING ☐ PARTICIPATING IN PART ☒ NONE
☐ NON-PARTICIPATING (Maintenance) ☐ NON-PARTICIPATING

FEDERAL SEGREGATION (If more than one funding source or P.I.P. type)

☒ CCO FUNDED PER CONTRACT ☐ CCO FUNDED AS FOLLOWS

FEDERAL FUNDING SOURCE	PERCENT

49.001.03

CONTRACT CHANGE ORDER

Change Requested by: Engineer

CCO 1	Suppl. No. 1	Contract No. 04 - 0120R4	Road SF-80-12.6/13.2	FED. AID LOC.: ACBRIM-080-1(097)N

To: **CC MYERS INC**

You are directed to make the following changes from the plans and specifications or do the following described work not included in the plans and specifications for this contract. ***NOTE: This change order is not effective until approved by the Engineer.***

Description of work to be done, estimate of quantities and prices to be paid. (Segregate between additional work at contract price, agreed price and force account.) Unless otherwise stated, rates for rental of equipment cover only such time as equipment is actually used and no allowance will be made for idle time. This last percentage shown is the net accumulated increase or decrease from the original quantity in the Engineer's Estimate.

Extra Work at Force Account:

Provide additional funds to maintain the roadway and provide additional traffic control for the sole convenience and direction of the public in accordance with Section 7-1.08, Public Convenience, of the Standard Specifications and as authorized by the Engineer.

Provide for the State's share of flagging costs in accordance with Section 12-2.02, Flagging Cost, of the Standard Specifications.

Estimated cost of Extra Work at Force Account $200,000.00

Estimated Cost: **Increase** ☑ **Decrease** ☐ **$200,000.00**

By reason of this order the time of completion will be adjusted as follows: 0 days

Submitted by

Signature M.U. Anigol	Resident Engineer: MAHANTESH ANIGOL	Date 2/8/07

Approval Recommended by

Signature	Construction Engineer: JASON TOM	Date 2/8/07

Engineer Approval by

Signature	(Print name and title) JASON TOM - Chief	Date 2/8/07

We the undersigned contractor, have given careful consideration to the change proposed and agree, if this proposal is approved, that we will provide all equipment, furnish the materials, except as may otherwise be noted above, and perform all services necessary for the work above specified, and will accept as full payment therefor the prices shown above.

NOTE: If you, the contractor, do not sign acceptance of this order, your attention is directed to the requirements of the specifications as to proceeding with the ordered work and filing a written protest within the time therein specified.

Contractor Acceptance by

Signature Not applicable	(Print name and title)	Date

STATE OF CALIFORNIA - DEPARTMENT OF TRANSPORTATION

CONTRACT CHANGE ORDER MEMORANDUM

TO: JASON TOM / JASON TOM	FILE: **E.A.** 04 - 0120R4
FROM: MAHANTESH ANIGOL	**CO-RTE-PM** SF-80-12.6/13.2
	FED. NO. ACBRIM-080-1(097)N
CCO#: 1 SUPPLEMENT#: 1 Category Code: **AWZZ**	CONTINGENCY BALANCE (incl. this change) **$28,649,810.51**
COST: **$200,000.00** INCREASE ☑ DECREASE ☐	HEADQUARTERS APPROVAL REQUIRED? ☐ YES ☑ NO
SUPPLEMENTAL FUNDS PROVIDED: **$200,000.00**	IS THIS REQUEST IN ACCORDANCE WITH ENVIRONMENTAL DOCUMENTS? ☑ YES ☐ NO
CCO DESCRIPTION: Add Funds Flagging & Traffic Control	**PROJECT DESCRIPTION:** CONSTRUCT ROUTE 80 TEMP BYPASS STRUCTURE

Original Contract Time:	Time Adj. This Change:	Previously Approved CCO Time Adjustments:	Percentage Time Adjusted: (including this change)	Total # of Unreconciled Deferred Time CCO(s): (including this change)
475 Day(s)	0 Day(s)	381 Day(s)	80 %	7

THIS CHANGE ORDER PROVIDES FOR:

Provide additional funds to maintain the roadway and provide additional traffic control for the sole convenience and direction of the public in accordance with Section 7-1.08, Public Convenience, of the Standard Specifications and as authorized by the Engineer.

This Contract originally required that a Temporary Bypass Structure (TBS) be designed and constructed to facilitate the completion of the San Francisco-Oakland Bay Bridge corridor projects by the winter of 2006. The primary goal of the corridor projects is to achieve seismic safety as soon as possible. Due to extensions in the corridor schedule, the TBS will not be required to be in service until late 2009.

This is documented in the approved memorandum titled, "SFOBB Corridor Schedule Mitigation - Strategy for South-South Detour Contract Completion", which is attached to this Change Order. As part of that memorandum, work at the West Tie-In area is broken up into two phases with the first phase currently targeted for completion by the end of the fouth quarter of 2007. The design is currently in process and to mitigate any potential delays in completing the work on time, the Contractor is being directed to advance work in preparing the site, which includes closing the west-bound I-80 on-ramp until the end of 2007. The closing of the WB on-ramp will re-route traffic and impact San Francisco MUNI's ability to provide bus service to the general public and U.S. Coast Guard on Yerba Buena Island. This is added work and is a part of Phase 1 of the advance West Tie-In work.

The original Contract Change Order No. 1 utilized $100,000.00 of the existing $500,000.00 in Supplemental Work Funds as originally provided for this contract. Payment for this additional work will also be at Extra Work at Force Account for an estimated cost of $200,000.00, which can be financed from existing supplemental work funds, bringing the total amount allocated for this change order to $300,000.00.

The Contractor's signature is not required for additional funds for Extra Work at Force Account change orders. Therefore this change order is being issued unilaterally.

No adjustment of the contract time is warranted, as this change does not affect the controlling operation.

Design and Maintenance concurrence is not required, as this change does not affect the final design.

The Resident Engineer recommends approval of this contract change order.

005189 MAR-85
RECEIVED

ADA Notice: For individuals with sensory disabilities, this document is available in alternate formats. For information call: (916) 654-6410 or TDD (916) 654-3880 or write Records and Forms Management, 1120 N Street, MS-89, Sacramento, CA 95814.

CONTRACT CHANGE ORDER MEMORANDUM

CONCURRED BY:	
Construction Engineer: Mahantesh Anigol, RE	Date 2/8/07
Bridge Engineer:	Date
Project Engineer:	Date
Project Manager:	Date
FHWA Rep.:	Date
Environmental:	Date
Other (specify):	Date
Other (specify):	Date
District Prior Approval By:	Date
HQ (Issue Approve) By:	Date
Resident Engineer's Signature:	Date
M. U. Anigol	2/8/07

ESTIMATE OF COST

	THIS REQUEST	TOTAL TO DATE
ITEMS	$0.00	$0.00
FORCE ACCOUNT	$200,000.00	$300,000.00
AGREED PRICE	$0.00	$0.00
ADJUSTMENT	$0.00	$0.00
TOTAL	$200,000.00	$300,000.00

FEDERAL PARTICIPATION

☐ PARTICIPATING ☐ PARTICIPATING IN PART ☑ NONE
☐ NON-PARTICIPATING (MAINTENANCE) ☐ NON-PARTICIPATING

FEDERAL SEGREGATION (if more than one Funding Source or P.I.P. type)
☑ CCO FUNDED PER CONTRACT ☐ CCO FUNDED AS FOLLOWS

FEDERAL FUNDING SOURCE	PERCENT

ADA Notice: For individuals with sensory disabilities, this document is available in alternate formats. For information call: (916) 654-6410 or TDD (916) 654-3880 or write Records and Forms Management, 1120 N Street, MS-89, Sacramento, CA 95814.

CONTRACT CHANGE ORDER

Change Requested by: Engineer

CCO 1	Suppl. No. 2	Contract No. 04 - 0120R4	Road SF-80-12.6/13.2	FED. AID LOC.: ACBRIM-080-1(097)N

To: **CC MYERS INC**

You are directed to make the following changes from the plans and specifications or do the following described work not included in the plans and specifications for this contract. ***NOTE: This change order is not effective until approved by the Engineer.***

Description of work to be done, estimate of quantities and prices to be paid. (Segregate between additional work at contract price, agreed price and force account.) Unless otherwise stated, rates for rental of equipment cover only such time as equipment is actually used and no allowance will be made for idle time. This last percentage shown is the net accumulated increase or decrease from the original quantity in the Engineer's Estimate.

Extra Work at Force Account:

Provide additional funds to maintain the roadway and provide additional traffic control for the sole convenience and direction of the public in accordance with Section 7-1.08, Public Convenience, of the Standard Specifications and as authorized by the Engineer.

Provide for the State's share of flagging costs in accordance with Section 12-2.02, Flagging Cost, of the Standard Specifications.

Estimated cost of Extra Work at Force Account $200,000.00

Estimated Cost: Increase ☑ Decrease ☐ **$200,000.00**

By reason of this order the time of completion will be adjusted as follows: 0 days

Submitted by

Signature	Resident Engineer BILL CASEY	Date 11-30-07

Approval Recommended by

Signature DT	Area Construction Manager DENNIS TURCHON	Date 12-4-07

Engineer Approval by

Signature DT	Area Construction Manager DENNIS TURCHON	Date 12-4-07

We the undersigned contractor, have given careful consideration to the change proposed and agree, if this proposal is approved, that we will provide all equipment, furnish the materials, except as may otherwise be noted above, and perform all services necessary for the work above specified, and will accept as full payment therefor the prices shown above.

NOTE: If you, the contractor, do not sign acceptance of this order, your attention is directed to the requirements of the specifications as to proceeding with the ordered work and filing a written protest within the time therein specified.

Contractor Acceptance by

Signature NOT APPLICABLE	(Print name and title)	Date

STATE OF CALIFORNIA - DEPARTMENT OF TRANSPORTATION

CONTRACT CHANGE ORDER MEMORANDUM

DATE: 11/24/2007

RECEIVED

006781 DEC 14 5

TO: MIKE FORNER / DENNIS TURCHON	FILE: E.A. 04 - 0120R4
	CO-RTE-PM SF-80-12.6/13.2
FROM: BILL CASEY	FED. NO. ACBRIM-080-1(097)N

CCO#:	1	SUPPLEMENT#:	2	Category Code: AWZZ	CONTINGENCY BALANCE (incl. this change) $131,454,654.41
COST:	$200,000.00	INCREASE ☑	DECREASE ☐		HEADQUARTERS APPROVAL REQUIRED? ☐ YES ☑ NO
SUPPLEMENTAL FUNDS PROVIDED:	$200,000.00				IS THIS REQUEST IN ACCORDANCE WITH ENVIRONMENTAL DOCUMENTS? ☑ YES ☐ NO

CCO DESCRIPTION:
Additional Traffic Control

PROJECT DESCRIPTION:
CONSTRUCT ROUTE 80 TEMP BYPASS STRUCTURE

Original Contract Time:	Time Adj. This Change:	Previously Approved CCO Time Adjustments:	Percentage Time Adjusted: (including this change)	Total # of Unreconciled Deferred Time CCO(s): (including this change)
475 Day(s)	0 Day(s)	1195 Day(s)	252 %	7

THIS CHANGE ORDER PROVIDES FOR:

Provide additional funds to maintain the roadway and provide additional traffic control for the sole convenience and direction of the public in accordance with Section 7-1.08, Public Convenience, of the Standard Specifications and as authorized by the Engineer.

This Contract originally required that a Temporary Bypass Structure (TBS) be designed and constructed to facilitate the completion of the San Francisco-Oakland Bay Bridge corridor projects by the winter of 2006. A December 14, 2006 Department Strategy Memo, approved by Richard Land and Tony Anziano, called for the Department to assume responsibility for the design of the ETI and WTI structures and to order design enhancements to the steel viaduct. The strategy memo recognized that these actions would likely extend the contract completion into 2010 which represents an approximate 3 year extension in contract time.

Due to the contract extension, additional funds are required to:

1. Maintain the roadway and provide additional traffic control for the sole convenience and direction of the public in accordance with Section 7-1.08, Public Convenience, of the Standard Specifications and as authorized by the Engineer.

2. Payment for the State's share of flagging costs in accordance with Section 12-2.02, Flagging Costs, of the Standard Specifications.

The original Contract Change Order No. 1 and Contract Change Order No. 1, Supplement No. 1 utilized $300,000.00 of the existing $500,000.00 in Supplemental Work Funds as originally provided for this contract. Payment for this additional work will also be at Extra Work at Force Account for an estimated cost of $200,000.00 which can be financed from existing supplemental work funds.

The Contractor's signature is not required for additional funds for Extra Work at Force Account change orders. Therefore this change order is being issued unilaterally.

No adjustment of the contract time is warranted, as this change does not affect the controlling operation.

Design and Maintenance concurrence is not required, as this change does not affect the final design.

The Resident Engineer recommends approval of this contract change order.

ADA Notice: For individuals with sensory disabilities, this document is available in alternate formats. For information call: (916) 654-6410 or TDD (916) 654-3880 or write Records and Forms Management, 1120 N Street, MS-89, Sacramento, CA 95814.

CONCURRED BY:		
Construction Engineer:	Mahantesh Anigol	Date 12/5/07
Bridge Engineer:		Date
Project Engineer:	Hong Wong	Date
Project Manager:	Alec Melkonians	Date
FHWA Rep.:		Date
Environmental:		Date
Other (specify):		Date
Other (specify):		Date
District Prior Approval By:		Date
HQ (Issue Approve) By:	Ken Darby, HQ CCO Engineer	Date
Resident Engineer's Signature:		Date
		11-30-07

ESTIMATE OF COST

	THIS REQUEST	TOTAL TO DATE
ITEMS	$0.00	$0.00
FORCE ACCOUNT	$200,000.00	$500,000.00
AGREED PRICE	$0.00	$0.00
ADJUSTMENT	$0.00	$0.00
TOTAL	$200,000.00	$500,000.00

FEDERAL PARTICIPATION

☐ PARTICIPATING ☐ PARTICIPATING IN PART ☐ NONE
☐ NON-PARTICIPATING (MAINTENANCE) ☑ NON-PARTICIPATING

FEDERAL SEGREGATION (if more than one Funding Source or P.I.P. type)
☑ CCO FUNDED PER CONTRACT ☐ CCO FUNDED AS FOLLOWS

FEDERAL FUNDING SOURCE	PERCENT

ADA Notice: For individuals with sensory disabilities, this document is available in alternate formats. For information call: (916) 654-6410 or TDD (916) 654-3880 or write Records and Forms Management, 1120 N Street, MS-89, Sacramento, CA 95814.

CONTRACT CHANGE ORDER

Change Requested by: Engineer

CCO 1	Suppl. No. 3	Contract No. 04 - 0120R4	Road SF-80-12.6/13.2	FED. AID LOC.: ACBRIM-080-1(097)N

To: CC MYERS INC

You are directed to make the following changes from the plans and specifications or do the following described work not included in the plans and specifications for this contract. ***NOTE: This change order is not effective until approved by the Engineer.***

Description of work to be done, estimate of quantities and prices to be paid. (Segregate between additional work at contract price, agreed price and force account.) Unless otherwise stated, rates for rental of equipment cover only such time as equipment is actually used and no allowance will be made for idle time. This last percentage shown is the net accumulated increase or decrease from the original quantity in the Engineer's Estimate.

Extra Work at Force Account:

Provide additional funds.

Estimated Cost of Extra Work at Force Account $300,000.00

Estimated Cost: Increase ☑ Decrease ☐ **$300,000.00**

By reason of this order the time of completion will be adjusted as follows: 0 days

Submitted by

Signature	Resident Engineer	Date
	BILL CASEY	6-11-08

Approval Recommended by

Signature	Area Construction Manager	Date
	DENNIS TURCHON	6/11/08

Engineer Approval by

Signature	Area Construction Manager	Date
	DENNIS TURCHON	6/18/08

We the undersigned contractor, have given careful consideration to the change proposed and agree, if this proposal is approved, that we will provide all equipment, furnish the materials, except as may otherwise be noted above, and perform all services necessary for the work above specified, and will accept as full payment therefor the prices shown above.

NOTE: If you, the contractor, do not sign acceptance of this order, your attention is directed to the requirements of the specifications as to proceeding with the ordered work and filing a written protest within the time therein specified.

Contractor Acceptance by

Signature	(Print name and title)	Date
N/A	N/A	N/A

STATE OF CALIFORNIA - DEPARTMENT OF TRANSPORTATION

CONTRACT CHANGE ORDER MEMORANDUM

DATE: 3/26/2009

TO: MIKE FORNER / DEANNA VILCHECK	FILE: E.A. 04 - 0120R4
FROM: BILL CASEY	CO-RTE-PM SF-80-12.6/13.2
	FED. NO. ACBRIM-080-1(097)N
CCO#: 1 SUPPLEMENT#: 4 Category Code: AXZZ	CONTINGENCY BALANCE (incl. this change) **$47,018,940.59**
COST: **($57,580.00)** INCREASE ☐ DECREASE ☑	HEADQUARTERS APPROVAL REQUIRED? ☑ YES ☐ NO
SUPPLEMENTAL FUNDS PROVIDED: **$0.00**	IS THIS REQUEST IN ACCORDANCE WITH ENVIRONMENTAL DOCUMENTS? ☑ YES ☐ NO
CCO DESCRIPTION: Additional Funds & Item Deletion	**PROJECT DESCRIPTION:** CONSTRUCT ROUTE 80 TEMP BYPASS STRUCTURE

Original Contract Time:	Time Adj. This Change:	Previously Approved CCO Time Adjustments:	Percentage Time Adjusted: (including this change)	Total # of Unreconciled Deferred Time CCO(s): (including this change)
475 Day(s)	**0** Day(s)	**1195** Day(s)	**252** %	**7**

THIS CHANGE ORDER PROVIDES FOR:

Providing additional funds to maintain the roadway and provide additional traffic control for the sole convenience and direction of the public in accordance with Section 7-1.08, Public Convenience, of the Standard Specifications and as authorized by the Engineer. In addition, delete Contract Item No. 25 - Traffic Control System.

This project, the Temporary Bypass Structure (TBS), was awarded in March 2004 to construct a detour that will allow for the tie in of the new east span of the San Francisco Oakland Bay Bridge to Yerba Buena Island. The TBS encompasses three main structures, the East Tie-In (ETI) to the existing bridge, the West Tie-In (WTI) to Yerba Buena Island, and the Viaduct structure between the two tie ins.

Two separate Department strategy memorandums, dated December 14, 2006 and December 25, 2006 and both approved by Tony Anziano - Toll Bridge Program Manager, Richard Land - Chief Engineer, and subsequently the Toll Bridge Program Oversight Committee (TBPOC), recommended that the Department assume the design responsibility for the ETI and WTI structures and recommended the advance construction of foundation work for the Yerba Buena Island Transition Structure (YBITS) to be added to this contract. This strategy led the contract to be extended through late 2010, approximately 5 years past the original completion date.

Based on the December 14, 2006 memorandum, the design of the ETI structure was changed from a design that incorporated the existing steel truss bridge with the new structure to a design that replaces the existing structure with a new structure (roll out / roll in). The new roll out / roll in structure design necessitated a traffic control scheme different than the one as originally bid by the Contractor, thereby rendering their traffic control scheme irrelevant and no longer applicable. As such, the Contractor has requested to be compensated under Extra Work at Force Account to perform the following:

1. Maintain the roadway and provide additional traffic control for the sole convenience and direction of the public in accordance with Section 7-1.08, Public Convenience, of the Standard Specifications and as authorized by the Engineer.

2. Payment for the State's share of flagging costs in accordance with Section 12-2.02, Flagging Costs, of the Standard Specifications.

The original and supplemental funds of Contract Change Order No. 1 have been depleted and additional funding is required to continue the above work until project completion. As a consequence of the two approved strategy memorandums, this CCO also deletes Contract Item No. 25 (Traffic Control System) since the scope of work as originally contemplated has been completely changed, through which an Adjustment of Compensation would not provide adequate compensation.

Elimination of the existing traffic control system shall be made by eliminating the specified contract item at a savings of $500,000,000. Compensation for work performed on this item of work shall be paid as an Adjustment of Compensation at an agreed lump sum of $42,420.00. Compensation for maintaining traffic control and for providing flaggers shall be paid as Extra Work at Force Account for an estimated cost of $400,000.00, bringing the total EWFA value to $1,200,000.00. The net change order cost of -$57,580.00 shall be credited back to the contract's contingency fund. A cost analysis is on file.

No adjustment of the contract time is warranted, as this change does not affect the controlling operation.

ADA Notice: For individuals with sensory disabilities, this document is available in alternate formats. For information call: (916) 654-6410 or TDD (916) 654-3880 or write Records and Forms Management, 1120 N Street, MS-89, Sacramento, CA 95814.

This change was concurred by Alec Melkonians - Asst. Project Manager, Hong Wong - Project Engineer, and Patrick Treacy - HQ Asst. Construction Coordinator. Maintenance concurrence is not required, as this change does not affect the final design.

FHWA concurrence is not required as they are no longer providing funds for this project.

RECEIVED
JUL 14 '09
010737

CONCURRED BY:			
Construction Engineer:	Jeannie Balderramos	Date	
Bridge Engineer:		Date	
Project Engineer:	Hong Wong, PE	Date	4/16/09
Project Manager:	Alec Melkonians	Date	4/16/09
FHWA Rep.:		Date	
Environmental:		Date	
Other (specify):	John M. Thomas, Traffic Engineer	Date	5/6/09
Other (specify):		Date	
District Prior Approval By:		Date	
HQ (Issue Approve) By:	Bob Molera, HQ CCO Engineer	Date	6/9/09
Resident Engineer's Signature:		Date	6-4-09

ESTIMATE OF COST	THIS REQUEST	TOTAL TO DATE
ITEMS	($500,000.00)	($500,000.00)
FORCE ACCOUNT	$400,000.00	$1,200,000.00
AGREED PRICE	$0.00	$0.00
ADJUSTMENT	$42,420.00	$42,420.00
TOTAL	($57,580.00)	$742,420.00

FEDERAL PARTICIPATION

☐ PARTICIPATING ☐ PARTICIPATING IN PART ☑ NONE
☐ NON-PARTICIPATING (MAINTENANCE) ☐ NON-PARTICIPATING

FEDERAL SEGREGATION (if more than one Funding Source or P.I.P. type)
☐ CCO FUNDED PER CONTRACT ☐ CCO FUNDED AS FOLLOWS

FEDERAL FUNDING SOURCE	PERCENT

ADA Notice: For individuals with sensory disabilities, this document is available in alternate formats. For information call: (916) 654-6410 or TDD (916) 654-3880 or write Records and Forms Management, 1120 N Street, MS-89, Sacramento, CA 95814.

STATE OF CALIFORNIA - DEPARTMENT OF TRANSPORTATION

CONTRACT CHANGE ORDER MEMORANDUM

DATE: 2/8/2010

TO: MIKE FORNER / DEANNA VILCHECK	FILE: **E.A.** 04 - 0120R4
	CO-RTE-PM SF-80-12.6/13.2
FROM: BILL CASEY	**FED. NO.**
CCO#: **1** SUPPLEMENT#: **5** Category Code: **AEZZ**	CONTINGENCY BALANCE (incl. this change) **$41,809,663.59**
COST: **$250,000.00** INCREASE ☑ DECREASE ☐	HEADQUARTERS APPROVAL REQUIRED? ☑ YES ☐ NO
SUPPLEMENTAL FUNDS PROVIDED: **$0.00**	IS THIS REQUEST IN ACCORDANCE WITH ENVIRONMENTAL DOCUMENTS? ☑ YES ☐ NO
CCO DESCRIPTION: Additional Traffic Control	**PROJECT DESCRIPTION:** CONSTRUCT ROUTE 80 TEMP BYPASS STRUCTURE

Original Contract Time:	Time Adj. This Change:	Previously Approved CCO Time Adjustments:	Percentage Time Adjusted: (including this change)	Total # of Unreconciled Deferred Time CCO(s): (including this change)
475 Day(s)	**0** Day(s)	**1660** Day(s)	**349** %	**0**

THIS CHANGE ORDER PROVIDES FOR:

Additional funding to maintain the roadway and provide additional traffic control for the sole convenience and direction of the public in accordance with Section 7-1.08, Public Convenience, of the Standard Specifications.

This project was awarded in March 2004 to construct a detour that will allow for the tie in of the new east span of the San Francisco Oakland Bay Bridge to Yerba Buena Island. The detour encompasses three main structures, the East Tie-In (ETI) to the existing bridge, the West Tie-In (WTI) to Yerba Buena Island and the Viaduct structure between the two tie ins. The contract was issued as a performance based contract with the contractor responsible for providing the design of the structure based on specified design criteria.

Two separate Department strategy memorandums, dated December 14, 2006 and December 25, 2006 and both approved by Tony Anziano – Toll Bridge Program Manager, Richard land – Chief Engineer and subsequently by the Toll Bridge Program Oversight Committee (TBPOC), recommended that the Department assume the design responsibility for the ETI and WTI structures and recommended the advance construction of foundation work for the Yerba Buena Island Transition Structure (YBITS) to be added to this contract. The implementation of these strategies has led to the extension of the contract through the end of 2010 approximately 5 years past the original contract completion date.

The implementation of these strategies has also significantly added to the work identified to be performed under Change Order No. 1. It is now anticipated that additional funding will be required for the work of this change. The majority of the cost pertains to flagging that is required to safety allow public and construction traffic to use the narrow and twisting roadway that provides the sole access to the jobsite.

The work shall be compensated as extra work at force account at an estimated cost of $250,000.00 which shall be financed from the contract contingency funds. A cost analysis is on file.

No adjustment of contract time is warranted as the change will not affect the controlling operation.

Maintenance concurrence is not required as the work doesn't affect any permanent roadway features.

ADA Notice: For individuals with sensory disabilities, this document is available in alternate formats. For information call: (916) 654-6410 or TDD (916) 654-3880 or write Records and Forms Management, 1120 N Street, MS-89, Sacramento, CA 95814.

CONCURRED BY:		
Construction Engineer:	Bill Casey, Resident Engineer	Date 2/9/10
Bridge Engineer:		Date
Project Engineer:	Minh B. Nguyen, PE	Date 2/3/10
Project Manager:	Alec Melkonians	Date 2/8/10
FHWA Rep.:		Date
Environmental:		Date
Other (specify):	Jeannie Balderramos	Date 2/10/10
Other (specify):		Date
District Prior Approval By:		Date
HQ (Issue Approve) By:	Larry Salhaney, HQ CCO Engine	Date 2/16/10
Resident Engineer's Signature:	Deanne Villeneuve for Bill Casey	Date 2/9/10

ESTIMATE OF COST

	THIS REQUEST	TOTAL TO DATE
ITEMS	$0.00	($500,000.00)
FORCE ACCOUNT	$250,000.00	$1,450,000.00
AGREED PRICE	$0.00	$0.00
ADJUSTMENT	$0.00	$42,420.00
TOTAL	$250,000.00	$992,420.00

FEDERAL PARTICIPATION

☐ PARTICIPATING ☐ PARTICIPATING IN PART ☒ NONE
☐ NON-PARTICIPATING (MAINTENANCE) ☐ NON-PARTICIPATING

FEDERAL SEGREGATION (if more than one Funding Source or P.I.P. type)
☐ CCO FUNDED PER CONTRACT ☐ CCO FUNDED AS FOLLOWS

FEDERAL FUNDING SOURCE	PERCENT

ADA Notice: For individuals with sensory disabilities, this document is available in alternate formats. For information call: (916) 654-6410 or TDD (916) 654-3880 or write Records and Forms Management, 1120 N Street, MS-89, Sacramento, CA 95814.

STATE OF CALIFORNIA - DEPARTMENT OF TRANSPORTATION

CONTRACT CHANGE ORDER

Change Requested by: Engineer

CCO: 1	Suppl. No. 6	Contract No. 04 - 0120R4	Road SF-80-12.6/13.2	FED. AID LOC.:

To: **CC MYERS INC**

You are directed to make the following changes from the plans and specifications or do the following described work not included in the plans and specifications for this contract. ***NOTE: This change order is not effective until approved by the Engineer.***

Description of work to be done, estimate of quantities and prices to be paid. (Segregate between additional work at contract price, agreed price and force account.) Unless otherwise stated, rates for rental of equipment cover only such time as equipment is actually used and no allowance will be made for idle time. This last percentage shown is the net accumulated increase or decrease from the original quantity in the Engineer's Estimate.

Extra Work at Force Account:

Provide additional funds for scope of work as approved on the original Change Order #1.

Estimated cost of Extra Work at Force Account $500,000.00

Estimated Cost: **Increase** ☑ **Decrease** ☐ **$500,000.00**

By reason of this order the time of completion will be adjusted as follows: 0 days

Submitted by

Signature	Resident Engineer	Date
Jeannie Balderrama	JEANNIE BALDERRAMOS	7/2/10

Approval Recommended by

Signature	SFOBB Construction Manager	Date
Mike Forner	MIKE FORNER	7/2/10

Engineer Approval by

Signature	SFOBB Construction Manager	Date
Mike Forner	MIKE FORNER	7/7/10

We the undersigned contractor, have given careful consideration to the change proposed and agree, if this proposal is approved, that we will provide all equipment, furnish the materials, except as may otherwise be noted above, and perform all services necessary for the work above specified, and will accept as full payment therefor the prices shown above.

NOTE: If you, the contractor, do not sign acceptance of this order, your attention is directed to the requirements of the specifications as to proceeding with the ordered work and filing a written protest within the time therein specified.

Contractor Acceptance by

Signature	(Print name and title)	Date
NOT REQUIRED		

...TE OF CALIFORNIA
...EPARTMENT OF TRANSPORTATION

CONTRACT CHANGE ORDER NO. 2 SUPPL. --

ROAD **SF-80-12.6/13.2** SHEET 1 OF 1 SHEETS

FEDERAL NO.(S) **ACBRIM-080-1(097)N** CONTRACT NO. **04-0120R4**

To **C.C. Myers, Inc.** Contractor

You are hereby directed to make the herein described changes from the plans and specifications or do the following described work not included in the plans and specifications on this contract.

NOTE: This change order is not effective until approved by the Chief Engineer.

Description of work to be done, estimate of quantities, and prices to be paid. Segregate between additional work at contract price, agreed price and force account. Unless otherwise stated, rates for rental equipment cover only such time as equipment is actually used and no allowance will be made for idle time.

This Change is requested by the **ENGINEER.**

The last percentage shown is the net accumulated increase or decrease from the original in the Engineer's Estimate.

EXTRA WORK @ AGREED LUMP SUM PRICE:

In accordance with Section 2-1.06, "Bidder Compensation," of the Special Provisions, the Contractor shall contact and arrange for pass-through payment for bidder compensation in the amount of $500,000 within 5 days of receipt of payment from the Department, and providing proof of payment to the Department, for each of the following:

- FCI / Balfour Beatty, a Joint Venture, Phone No. (707) 742-6000
- California Engineering Contractors, Inc., Phone No. (415) 986-6500
- Schimmick Construction Company, Inc. / Obayashi Corp., a Joint Venture, Phone No. (510) 293-1100

For this work, the Contractor shall receive a 5% markup on the total funds issued upon presenting proof of payment to the Department. No additional markups will be allowed.

A total lump sum payment of $1,575,000.00 will be made for this work. This payment constitutes full compensation, including all mark ups, for this work.

Estimated Cost **Decrease** **0.00** **or Increase** **$ 1,575,000**

By reason of this order the time of completion will be adjusted as follows:	**0 DAYS**

Submitted by: _____ Date: 5-3-04
Kenneth Loncharich, Resident Engineer

Approval Recommended: _____ Date: _____
(Kenneth Loncharich, Resident Engineer)

Approved by: Chief Engineer _____ Date: 5-6-04

We, the undersigned contractor, have given careful consideration to the change proposed and hereby agree, if this proposal is approved, that we will provide all equipment, furnish all materials, except as may otherwise be noted above, and perform all services necessary for the work above specified, and will accept as full payment therefor the prices shown above.

Accepted, Date 5/4/04 Contractor **C.C. MYERS, INC.**

By _____ Title **DEWEY C. LEE, JR. Contract Administrator**

If the contractor does not sign acceptance of this order, his attention is directed to the requirements of the specifications as to proceeding with the ordered work and filing a written protest within the time therein specified.

HC-5 Word(Rev.6/94)

STATE OF CALIFORNIA - DEPARTMENT OF TRANSPORTATION

CONTRACT CHANGE ORDER MEMORANDUM

DC-CEM-4903(OLD HC-39 REV 6/93) CT#7541-3544-0

DATE: May 3, 2004

TO: Amer Bata, SFOBB Construction Manager

FROM: Kenneth Loncharich, Resident Engineer

FILE
E.A. 04-0120R4
CO-RTE-PM SF-80-12.6/13.2
FED NO. ACBRIM-080-1(097)N

CCO NO.	SUPPLEMENT NO.	CATEGORY CODE:
002	--	AWZZ

CONTINGENCY BALANCE (including this change): $ 4,266,350.00

$ 1,575,000 INCREASE

HEADQUARTERS APPROVAL REQUIRED? YES ☐ NO ☒

SUPPLEMENTAL FUND PROVIDED: $ 1,575,000

IS THIS REQUEST IN ACCORDANCE WITH ENVIRONMENTAL DOCUMENTS? YES ☒ NO ☐

THIS CHANGE ORDER PROVIDES FOR:

...compensating the Contractor for pass-through payment of bidder compensation to the second, third, and fourth low bidders in conformance with Section 2-1.06, "Bidder Compensation," of the Special Provisions, ADDENDUM #14.
The Department recognized the cost required to prepare bids for a project of this magnitude. To encourage competitive bidding, within 90 days of award of contract, the second, third, and fourth low bidders shall each receive $500,000 to defray a portion of the costs of providing a responsive bid.

Therefore, in accordance with Section 2-1.06, "Bidder Compensation," of the Special Provisions, the Contractor shall contact and arrange for pass-through payment of bidder compensation in the amount of $500,000, and collect proof of payment in accordance with the payment provisions of Section 9-1.03B, "Work Performed by Special Forces and Other Special Services," of the Standard Specifications, for each of the following:

- FCI / Balfour Beatty, a Joint Venture, Phone No. (707) 742-6000
- California Engineering Contractors, Inc., Phone No. (415) 986-6500
- Schimmick Construction Company, Inc. / Obayashi Corp., a Joint Venture, Phone No. (510) 293-1100

For this work, the Contractor shall receive a 5% markup, in lieu of 15%, on the total funds issued upon presenting proof of payment to the Department. No additional markups will be allowed. THE CCO AMOUNT WILL BE PAID USING SUPPLEMENTAL FUND OF $1,575,000 PROVIDED FOR THIS PURPOSE IN THE SUPPLEMENTAL FUNDS.*

RECEIVED NOV 24 04 00057

Janet Adams, PROJECT MANAGER — DATE 4/29/04

DATE

DATE

DATE

OTHER (Specify) — DATE

DATE

DIST. PRIOR APPROVAL BY — DATE

HQ (ISSUE & APPROVE) (TO PROCEED) BY — DATE

Kenneth Loncharich, RESIDENT ENGINEER — DATE 5-1-04

ESTIMATE OF COST

	THIS REQUEST	TOTAL TO DATE
ITEMS	$ 0.00	$ 0.00
FORCE ACCOUNT	$ 0.00	$ 0.00
AGREED PRICE	$ 1,575,000	$ 1,575,000
ADJUSTMENT	$ 0.00	$ 0.00
TOTAL	$ $ 1,575,000	$ $ 1,575,000

FEDERAL PARTICIPATION

☐ PARTICIPATING ☐ PARTICIPATING IN PART ☒ NONE
☐ NON-PARTICIPATING (Maintenance) ☐ NON-PARTICIPATING

FEDERAL SEGREGATION (If more than one funding source or P.I.P. type)

☐ CCO FUNDED PER CONTRACT ☐ CCO FUNDED AS FOLLOWS

FEDERAL FUNDING SOURCE — PERCENT

RECEIVED MAY 25 2004

* ANDREW YAN 05/07/04. 49.02.03

OF CALIFORNIA
ARTMENT OF TRANSPORTATION

CONTRACT CHANGE ORDER NO. 3 **SUPPL. --**

ROAD **SF-80-12.6/13.2** SHEET **1** OF **1** SHEETS

FEDERAL NO.(S) **ACBRIM-080-1(097)N** CONTRACT NO. **04-0120R4**

To **C.C. Myers, Inc.** Contractor

You are hereby directed to make the herein described changes from the plans and specifications or do the following described work not included in the plans and specifications on this contract.

NOTE: This change order is not effective until approved by the Chief Engineer.

Description of work to be done, estimate of quantities, and prices to be paid. Segregate between additional work at contract price, agreed price and force account. Unless otherwise stated, rates for rental equipment cover only such time as equipment is actually used and no allowance will be made for idle time.

This Change is requested by the **CONTRACTOR.**

The last percentage shown is the net accumulated increase or decrease from the original in the Engineer's Estimate.

EXTRA WORK @ FORCE ACCOUNT:

In accordance with Section 5-1.11, Partnering, of the Contract Special Provisions, reimburse the Contractor for the State's share of the costs involved for the initial partnering session, any additional progress sessions throughout the life of the contract, the "Training in Partnering Concepts", and the Community Partnering Workshop", as approved by the Engineer.

No markups or surcharges will be added to the payments.

Estimated cost of Extra Work at Force Account $25,000.00

Estimated Cost **Decrease** **$ 0.00** **or Increase** **$ 25,000.00**

By reason of this order the time of completion will be adjusted as follows:	**0 DAYS**

Submitted by: Kenneth Lonchanich, Resident Engineer Date: 7-9-04

Approval Recommended: Kenneth Lonchanich, Resident Engineer Date: 7-9-04

Approved by: Chief Engineer Date: 9/2/04

We, the undersigned contractor, have given careful consideration to the change proposed and hereby agree, if this proposal is approved, that we will provide all equipment, furnish all materials, except as may otherwise be noted above, and perform all services necessary for the work above specified, and will accept as full payment therefor the prices shown above.

Accepted, Date 8/10/04 Contractor **C.C. MYERS, INC.**

By Dewey C. Lee, Jr. Title **DEWEY C. LEE, JR.**
Contract Administrator

If the contractor does not sign acceptance of this order, his attention is directed to the requirements of the specifications as to proceeding with the ordered work and filing a written protest within the time therein specified.

HC-5 Word(Rev.6/94)

STATE OF CALIFORNIA - DEPARTMENT OF TRANSPORTATION

CONTRACT CHANGE ORDER MEMORANDUM

DC-CEM-4903(OLD HC-39 REV 6/93) CT#7541-3544-0

DATE: June 4, 2004

TO: ner Bata, SFOBB Construction Manager

FROM: Kenneth Loncharich, Resident Engineer

CCO NO.	SUPPLEMENT NO.	CATEGORY CODE:
03	--	AUZZ

$ 25,000.00 INCREASE

SUPPLEMENTAL FUND PROVIDED: $ 25,000.00

FILE

E.A. 04-0120R4

CO-RTE-PM SF-80-12.6/13.2

FED NO. ACBRIM-080-1(097)N

CONTINGENCY BALANCE (including this change): $ 4,266,350.00

HEADQUARTERS APPROVAL REQUIRED? YES ☐ NO ☒

IS THIS REQUEST IN ACCORDANCE WITH ENVIRONMENTAL DOCUMENTS? YES ☒ NO ☐

THIS CHANGE ORDER PROVIDES FOR:

Reimbursing the Contractor for the State's share of the costs involved for the initial partnering session, any additional progress sessions throughout the life of the contract, the "Training in Partnering Concepts", and the "Community Partnering Workshop", in accordance with Section 5-1.11, Partnering, of the Contract Special Provisions.

This work will be done as Extra Work at Force Account at an estimated cost of $25,000.00, which will be financed from the supplemental funds provided for in this contract. Supplemental funds have been provided for this change in the amount of $25,000.00.

No adjustment of contract time is warranted by this change.

'aintenance concurrence is not required as this work is anticipated by the contract documents.

The Resident Engineer recommends this change order be approved.

RECEIVED
NOV 21 04
000574

Amer, Bata, SFOBB CONSTRUCTION MANAGER — DATE 9/2/04

DATE

DATE

DATE

OTHER (Specify) — DATE

DATE

DIST PRIOR APPROVAL BY — DATE

HQ ... E & APPROVE) (TO PROCEED) BY — DATE

Kenneth Loncharich, RESIDENT ENGINEER — DATE 9/2/04

49.03.01

ESTIMATE OF COST

	THIS REQUEST	TOTAL TO DATE
ITEMS	$ 0.00	$ 0.00
FORCE ACCOUNT	$ 25,000.00	$ 25,000.00
AGREED PRICE	$ 0.00	$ 0.00
ADJUSTMENT	$ 0.00	$ 0.00
TOTAL	$ $ 25,000.00	$ $ 25,000.00

FEDERAL PARTICIPATION

☐ PARTICIPATING ☐ PARTICIPATING IN PART ☒ NONE

☐ NON-PARTICIPATING (Maintenance) ☐ NON-PARTICIPATING

FEDERAL SEGREGATION (If more than one funding source or P.I.P. type)

☒ CCO FUNDED PER CONTRACT ☐ CCO FUNDED AS FOLLOWS

FEDERAL FUNDING SOURCE	PERCENT

STATE OF CALIFORNIA
DEPARTMENT OF TRANSPORTATION

CONTRACT CHANGE ORDER NO. 4 SUPPL. --

ROAD **SF-80-12.6/13.2** SHEET **1** OF **1** SHEETS

FEDERAL NO.(S) **ACBRIM-080-1(097)N** CONTRACT NO. **04-0120R4**

To **C.C. Myers, Inc.** Contractor

You are hereby directed to make the herein described changes from the plans and specifications or do the following described work not included in the plans and specifications on this contract.

NOTE: This change order is not effective until approved by the Chief Engineer.

Description of work to be done, estimate of quantities, and prices to be paid. Segregate between additional work at contract price, agreed price and force account. Unless otherwise stated, rates for rental equipment cover only such time as equipment is actually used and no allowance will be made for idle time.

This Change is requested by the **ENGINEER.**

The last percentage shown is the net accumulated increase or decrease from the original in the Engineer's Estimate.

EXTRA WORK @ FORCE ACCOUNT:

Establish a Dispute Review Board (DRB) for this contract as provided in Section 5-1.12, Dispute Review Board, of the Special Provisions.

The DRB agreement and certifications of the Contractor, State and DRB members shall be executed by the parties and made a part of this contract upon full execution.

The cost of this work shall be borne equally by the contractor and the State, as provided in the above agreement. No markups or surcharges will be allowed in payment of the State's share of the cost of the work provided herein.

Estimated cost of Extra Work at Force Account $100,000.00

Estimated Cost **Decrease** **$ 0.00** **or Increase** **$ 100,000.00**

By reason of this order the time of completion will be adjusted as follows:	**0 DAYS**

Submitted by: Kenneth Loncharich, Resident Engineer Date: 7-20-04

Approval Recommended: Kenneth Loncharich, Resident Engineer Date: 7-20-04

Approved by: Chief Engineer Date: 9/2/04

We, the undersigned contractor, have given careful consideration to the change proposed and hereby agree, if this proposal is approved, that we will provide all equipment, furnish all materials, except as may otherwise be noted above, and perform all services necessary for the work above specified, and will accept as full payment therefor the prices shown above.

Accepted, Date 8/11/04 Contractor **C.C. MYERS, INC.**

By Dewey C. Lee, Jr. Title **DEWEY C. LEE, JR. Contract Administrator**

If the contractor does not sign acceptance of this order, his attention is directed to the requirements of the specifications as to proceeding with the ordered work and filing a written protest within the time therein specified.

HC-5 Word(Rev.6/94)

STATE OF CALIFORNIA - DEPARTMENT OF TRANSPORTATION

CONTRACT CHANGE ORDER MEMORANDUM

DC-CEM-4903(OLD HC-39 REV 6/93) CT#7541-3544-0

DATE: **July 20, 2004**

TO: **mer Bata, SFOBB Construction Manager**

FROM: **Kenneth Loncharich, Resident Engineer**

FILE
E.A. **04-0120R4**
CO-RTE-PM **SF-80-12.6/13.2**
FED NO. **ACBRIM-080-1(097)N**

CCO NO.	SUPPLEMENT NO.	CATEGORY CODE:
04	--	ARZZ

CONTINGENCY BALANCE (including this change): **$ 4,266,350.00**

$ 100,000.00 **INCREASE**

HEADQUARTERS APPROVAL REQUIRED? YES ☐ NO ☒

SUPPLEMENTAL FUND PROVIDED **$ 240,000.00**

IS THIS REQUEST IN ACCORDANCE WITH ENVIRONMENTAL DOCUMENTS? YES ☒ NO ☐

THIS CHANGE ORDER PROVIDES FOR:

Establishing a Disputes Review Board (DRB) in accordance with the terms specified in the DRB specifications, guidelines, Agreement and Certifications specified in Section 5-1.12, Dispute Review Board, of the Special Provisions and made a part of this change. The purpose of the Board is to assist in the resolution of disputes and potential claims arising from the contract work.

The cost of providing a DRB for this contract shall be borne equally by the Contractor and the State. For the purposes of enabling partial payment to the Contractor on a monthly basis, the method of payment shall be Extra Work at Force Account. Payments shall be made on a force account basis from invoices submitted by the Board, not more often than once a month. Markups will not be allowed in the payment of the State's share of the invoiced costs.

'upplemental funds have been provided for this change in the amount of $ 240,000.00.

No adjustment of contract time is warranted by this change.

The Resident Engineer recommends this change order be approved.

RECEIVED
NOV 21 04
080 580

Amer, Bata, SFOBB CONSTRUCTION MANAGER — DATE 9/2/04

DATE

DATE

DATE

OTHER (Specify) — DATE

DATE

DIST PRIOR APPROVAL BY — DATE

HQ 'IE & APPROVE) (TO PROCEED) BY — DATE

Kenneth Loncharich, RESIDENT ENGINEER — DATE 7-20-04

ESTIMATE OF COST

	THIS REQUEST	TOTAL TO DATE
ITEMS	$ 0.00	$ 0.00
FORCE ACCOUNT	$ 100,000.00	$ 100,000.00
AGREED PRICE	$ 0.00	$ 0.00
ADJUSTMENT	$ 0.00	$ 0.00
TOTAL	$ $ 100,000.00	$ $ 100,000.00

FEDERAL PARTICIPATION

☒ PARTICIPATING ☐ PARTICIPATING IN PART ☐ NONE
☐ NON-PARTICIPATING (Maintenance) ☐ NON-PARTICIPATING

FEDERAL SEGREGATION(If more than one funding source or P.I.P. type)

☒ CCO FUNDED PER CONTRACT ☐ CCO FUNDED AS FOLLOWS

FEDERAL FUNDING SOURCE — PERCENT

49.004.04

STATE OF CALIFORNIA - DEPARTMENT OF TRANSPORTATION

CONTRACT CHANGE ORDER

Change Requested by: Engineer

CCO: 5	Suppl. No. 0	Contract No. 04 - 0120R4	Road SF-80-12.6/13.2	FED. AID LOC.: ACBRIM-080-1(097)N

To: CC MYERS INC

You are directed to make the following changes from the plans and specifications or do the following described work not included in the plans and specifications for this contract. ***NOTE: This change order is not effective until approved by the Engineer.***

Description of work to be done, estimate of quantities and prices to be paid. (Segregate between additional work at contract price, agreed price and force account.) Unless otherwise stated, rates for rental of equipment cover only such time as equipment is actually used and no allowance will be made for idle time. This last percentage shown is the net accumulated increase or decrease from the original quantity in the Engineer's Estimate.

Adjustment of Compensation at Unit Price:

Reimburse the contractor at the rate of $0.80 per hour of training given an employee on this contract in accordance with an approved training program as specified in Section 14, "Federal Requirement Training for Federal Aid Construction Projects", of the Special Provisions.

Estimated Cost of Adjustment of Compensation at Agreed Unit Price:

Twenty-five (25) apprentices or trainees @ 1,000 hours each @0.80 per hour = $ 20,000.00

Estimated cost of Adjustment of Compensation at Agreed Unit Price $20,000.00

Estimated Cost: **Increase** ☑ **Decrease** ☐ **$20,000.00**

By reason of this order the time of completion will be adjusted as follows: 0 days

Submitted by

Signature	Resident Engineer: LOURDES DAVID	Date 10/6/04

Approval Recommended by

Signature	Construction Engineer: LOURDES DAVID	Date 10/6/04

Engineer Approval by

Signature	(Print name and title) LOURDES DAVID - Construction Engineer	Date 11/9/04

We the undersigned contractor, have given careful consideration to the change proposed and agree, if this proposal is approved, that we will provide all equipment, furnish the materials, except as may otherwise be noted above, and perform all services necessary for the work above specified, and will accept as full payment therefor the prices shown above.

NOTE: If you, the contractor, do not sign acceptance of this order, your attention is directed to the requirements of the specifications as to proceeding with the ordered work and filing a written protest within the time therein specified.

Contractor Acceptance by

Signature	(Print name and title) DEWEY C. LEE, JR. Contract Administrator	Date 10/29/04

STATE OF CALIFORNIA - DEPARTMENT OF TRANSPORTATION

CONTRACT CHANGE ORDER MEMORANDUM

DATE: 10/6/2004 Page 1 of 1

TO: AMER BATA / LOURDES DAVID	FILE: **E.A.** 04 - 0120R4
FROM: LOURDES DAVID	**CO-RTE-PM** SF-80-12.6/13.2
	FED. NO. ACBRIM-080-1(097)N
CCO#: **5** SUPPLEMENT#: **0** Category Code: **ADZZ**	CONTINGENCY BALANCE (incl. this change) **$3,694,606.50**
COST: **$20,000.00** INCREASE ☑ DECREASE ☐	HEADQUARTERS APPROVAL REQUIRED? ☐ YES ☑ NO
SUPPLEMENTAL FUNDS PROVIDED: **$20,000.00**	IS THIS REQUEST IN ACCORDANCE WITH ENVIRONMENTAL DOCUMENTS? ☑ YES ☐ NO
CCO DESCRIPTION: Federal Trainee Program	**PROJECT DESCRIPTION:** CONSTRUCT ROUTE 80 TEMP BYPASS STRUCTURE

LOCATION: IN THE CITY AND COUNTY OF SAN FRANCISCO FROM YERBA BUENA TUNNEL TO 0.6 KM EAST OF THE YERBA BUENA TUNNEL

THIS CHANGE ORDER PROVIDES FOR:

reimbursing the contractor at the rate of $0.80 per hour of training given an employee on this contract in accordance with an approved training program as specified in Section 14, "Federal Requirement Training for Federal Aid Construction Projects", of the Special Provisions.

Section 14 provides for reimbursement of $0.80 per hour of training given an employee on this contract in accordance with an approved training program. This change order provides the funds for this payment.

This work will be paid for as Adjustment of Compensation at Agreed Unit Price of $0.80 per hour for each apprentice or trainee. It is estimated that twenty-five (25) apprentices or trainees at 1,000 hours each will be used, with a total cost of $20,000.00. Supplemental funds have been provided for this change in the amount of $20,000.00.

No adjustment of contract time is warranted by this change.

Design and Maintenance concurrence is not required as this work is anticipated by the contract documents.

RECEIVED
00154 3 MAR 22 05

CONCURRED BY:	
Construction Engineer: Lourdes David	Date 10/6/2004
Bridge Engineer:	Date
FHWA Representative:	Date
Project Engineer:	Date
Other (specify):	Date
	Date
	Date
District Prior Approval By:	Date
HQ (Issue Approve) By:	Date
Resident Engineer's Signature:	Date 10/6/2004

ESTIMATE OF COST

	THIS REQUEST	TOTAL TO DATE
ITEMS	$0.00	$0.00
FORCE ACCOUNT	$0.00	$0.00
AGREED PRICE	$0.00	$0.00
ADJUSTMENT	$20,000.00	$20,000.00
TOTAL	$20,000.00	$20,000.00

FEDERAL PARTICIPATION

☑ PARTICIPATING ☐ PARTICIPATING IN PART ☐ NONE
☐ NON-PARTICIPATING (MAINTENANCE) ☐ NON-PARTICIPATING

FEDERAL SEGREGATION (if more than one Funding Source or P.I.P. type)
☑ CCO FUNDED PER CONTRACT ☐ CCO FUNDED AS FOLLOWS

FEDERAL FUNDING SOURCE	PERCENT

STATE OF CALIFORNIA - DEPARTMENT OF TRANSPORTATION

CONTRACT CHANGE ORDER MEMORANDUM

DATE: 12/14/2004 Page 1 of 1

TO: AMER BATA / LOURDES DAVID	FILE: **E.A.** 04 - 0120R4
FROM: LOURDES DAVID	**CO-RTE-PM** SF-80-12.6/13.2
	FED. NO. ACBRIM-080-1(097)N
CCO#: **5** SUPPLEMENT#: **1** Category Code: **ADZZ**	CONTINGENCY BALANCE (incl. this change): **$3,634,193.49**
COST: **$50,000.00** INCREASE ☑ DECREASE ☐	HEADQUARTERS APPROVAL REQUIRED? ☐ YES ☑ NO
SUPPLEMENTAL FUNDS PROVIDED: **$50,000.00**	IS THIS REQUEST IN ACCORDANCE WITH ENVIRONMENTAL DOCUMENTS? ☑ YES ☐ NO
CCO DESCRIPTION: Non-Journey Person Training Program	**PROJECT DESCRIPTION:** CONSTRUCT ROUTE 80 TEMP BYPASS STRUCTURE

LOCATION: IN THE CITY AND COUNTY OF SAN FRANCISCO FROM YERBA BUENA TUNNEL TO 0.6 KM EAST OF THE YERBA BUENA TUNNEL

THIS CHANGE ORDER PROVIDES FOR:

Reimbursing the contractor at the rate of $2.00 per hour of on-site training or work on this contract for each Non-Journey Trainee as specified in Section 5-1.15, "Non-Journey Person Training Program", of the Special Provisions.

Section 5-1.15 provides for reimbursement of $2.00 per hour of on-site training or work on this contract for each Non-Journey Trainee. This change order provides the funds for this payment.

This work will be paid for as Adjustment of Compensation at Agreed Unit Price of $2.00 per hour of on-site training or work on this contract for each Non-Journey Trainee. It is estimated that Twenty-five (25) Non-Journey Trainees at 1,000 hours each will be used, with a total cost of $50,000.00. Supplemental funds have been provided for this change in the amount of $50,000.00.

Design and Maintenance concurrence is not required as this work is anticipated by the contract documents.

No adjustment of contract time is warranted by this change.

CONCURRED BY:	
Construction Engineer: Lourdes David LD	Date 2/14/2004
Bridge Engineer:	Date
FHWA Representative:	Date
Project Engineer:	Date
Other (specify):	Date
	Date
	Date
District Prior Approval By:	Date
HQ (Issue Approve) By:	Date
Resident Engineer's Signature:	Date 3/8/05

ESTIMATE OF COST

	THIS REQUEST	TOTAL TO DATE
ITEMS	$0.00	$0.00
FORCE ACCOUNT	$0.00	$0.00
AGREED PRICE	$0.00	$0.00
ADJUSTMENT	$50,000.00	$70,000.00
TOTAL	$50,000.00	$70,000.00

FEDERAL PARTICIPATION

☑ PARTICIPATING ☐ PARTICIPATING IN PART ☐ NONE
☐ NON-PARTICIPATING (MAINTENANCE) ☐ NON-PARTICIPATING

FEDERAL SEGREGATION (if more than one Funding Source or P.I.P. type)
☑ CCO FUNDED PER CONTRACT ☐ CCO FUNDED AS FOLLOWS

FEDERAL FUNDING SOURCE	PERCENT

STATE OF CALIFORNIA - DEPARTMENT OF TRANSPORTATION

CONTRACT CHANGE ORDER

Change Requested by: Engineer

CCO: 5	Suppl. No. 1	Contract No. 04 - 0120R4	Road SF-80-12.6/13.2	FED. AID LOC.: ACBRIM-080-1(097)N

To: **CC MYERS INC**

You are directed to make the following changes from the plans and specifications or do the following described work not included in the plans and specifications for this contract. ***NOTE: This change order is not effective until approved by the Engineer.***

Description of work to be done, estimate of quantities and prices to be paid. (Segregate between additional work at contract price, agreed price and force account.) Unless otherwise stated, rates for rental of equipment cover only such time as equipment is actually used and no allowance will be made for idle time. This last percentage shown is the net accumulated increase or decrease from the original quantity in the Engineer's Estimate

Adjustment of Compensation at Unit Price:

Reimburse the contractor at the rate of $2.00 per hour of on-site training or work on this contract for each Non-Journey Trainee as specified in Section 5-1.15, "Non-Journey Person Training Program", of the Special Provisions.

Estimated Cost of Adjustment of Compensation at Agreed Unit Price:

Twenty-five (25) Non-Journey Trainees @ 1,000 hours each @2.00 per hour = $ 50,000.00

Estimated cost of Adjustment of Compensation at Agreed Unit Price $50,000.00

Estimated Cost: **Increase** ☑ **Decrease** ☐ **$50,000.00**

By reason of this order the time of completion will be adjusted as follows: 0 days

Submitted by		
Signature Lourdes David	**Resident Engineer:** LOURDES DAVID	**Date** 12-14-04
Approval Recommended by		
Signature Lourdes David	**Construction Engineer:** LOURDES DAVID	**Date** 1-18-05
Engineer Approval by		
Signature Lourdes David	**(Print name and title)** LOURDES DAVID - Construction Engineer	**Date** 1-18-05

We the undersigned contractor, have given careful consideration to the change proposed and agree, if this proposal is approved, that we will provide all equipment, furnish the materials, except as may otherwise be noted above, and perform all services necessary for the work above specified, and will accept as full payment therefor the prices shown above.

NOTE: If you, the contractor, do not sign acceptance of this order, your attention is directed to the requirements of the specifications as to proceeding with the ordered work and filing a written protest within the time therein specified.

Contractor Acceptance by			
Signature Dewey C Lee Jr	**(Print name and title)**	**DEWEY C. LEE, JR.** **Contract Administrator**	**Date** 1/10/05

STATE OF CALIFORNIA - DEPARTMENT OF TRANSPORTATION

CONTRACT CHANGE ORDER

Change Requested by: Engineer

CCO: 6	Suppl. No. 0	Contract No. 04 - 0120R4	Road SF-80-12.6/13.2	FED. AID LOC.: ACBRIM-080-1(097)N

To: CC MYERS INC

You are directed to make the following changes from the plans and specifications or do the following described work not included in the plans and specifications for this contract. ***NOTE: This change order is not effective until approved by the Engineer.***

Description of work to be done, estimate of quantities and prices to be paid. (Segregate between additional work at contract price, agreed price and force account.) Unless otherwise stated, rates for rental of equipment cover only such time as equipment is actually used and no allowance will be made for idle time. This last percentage shown is the net accumulated increase or decrease from the original quantity in the Engineer's Estimate.

Adjustment of Compensation at Lump Sum:

(1) Paragraphs four and five of Section 2-1.02C, "Small Business and Disabled Veteran Business Enterprises Utilization and Reporting", of the Special Provisions are deleted.

(2) Section 5-1.16, "Monitoring", of the Special Provisions is deleted in its entirety.

For this deletion, the contractor will be paid the sum of $0.00. This sum constitutes full compensation, including markups for this change.

Total cost of Adjustment of Compensation at Agreed Lump Sum $0.00

Estimated Cost: **Increase** ☐ **Decrease** ☐ **$0.00**

By reason of this order the time of completion will be adjusted as follows: 0 days

Submitted by

Signature	Resident Engineer: LOURDES DAVID	Date 11/9/04

Approval Recommended by

Signature	Construction Engineer: LOURDES DAVID	Date 11/9/04

Engineer Approval by

Signature	(Print name and title) LOURDES DAVID - Construction Engineer	Date 2/11/05 ~~1-28-05~~

We the undersigned contractor, have given careful consideration to the change proposed and agree, if this proposal is approved, that we will provide all equipment, furnish the materials, except as may otherwise be noted above, and perform all services necessary for the work above specified, and will accept as full payment therefor the prices shown above.

NOTE: If you, the contractor, do not sign acceptance of this order, your attention is directed to the requirements of the specifications as to proceeding with the ordered work and filing a written protest within the time therein specified.

Contractor Acceptance by

Signature	(Print name and title)	DEWEY C. LEE, JR. Contract Administrator	Date 12/17/04

STATE OF CALIFORNIA - DEPARTMENT OF TRANSPORTATION

CONTRACT CHANGE ORDER MEMORANDUM

DATE: 11/5/2004

TO: AMER BATA / LOURDES DAVID	FILE: **E.A.** 04 - 0120R4
FROM: LOURDES DAVID	**CO-RTE-PM** SF-80-12.6/13.2
	FED. NO. ACBRIM-080-1(097)N
CCO#: **6** SUPPLEMENT#: **0** Category Code: **AWZZ**	CONTINGENCY BALANCE (incl. this change): **$3,699,520.50**
COST: **$0.00** INCREASE ☐ DECREASE ☐	HEADQUARTERS APPROVAL REQUIRED? ☑ YES ☐ NO
SUPPLEMENTAL FUNDS PROVIDED: **$0.00**	IS THIS REQUEST IN ACCORDANCE WITH ENVIRONMENTAL DOCUMENTS? ☑ YES ☐ NO
CCO DESCRIPTION: Removal of DBE/SBE Monitoring	**PROJECT DESCRIPTION:** CONSTRUCT ROUTE 80 TEMP BYPASS STRUCTURE

LOCATION: IN THE CITY AND COUNTY OF SAN FRANCISCO FROM YERBA BUENA TUNNEL TO 0.6 KM EAST OF THE YERBA BUENA TUNNEL

THIS CHANGE ORDER PROVIDES FOR:

(1) Paragraphs four and five of Section 2-1.02C, "Small Business and Disabled Veteran Business Enterprises Utilization and Reporting", of the Special Provisions are deleted.
(2) Section 5-1.16, "Monitoring", of the Special Provisions is deleted in its entirety.

Up until now, special provisions in the San Francisco Oakland Bay Bridge (SFOBB) east span contracts have required the contractor to submit forms identifying usage of Small Business Enterprises (SBEs), Disadvantaged Business Enterprises (DBEs), and Disabled Veteran Business Enterprises (DVBEs) on contracts on a monthly basis and attend a community meeting to present this information on a quarterly basis. The specifications also required the contractor to attend a community partnering meeting.

The requirements above were born out of complaints, concerns from the community about how well Caltrans is employing local DBEs, SBEs on the large SFOBB contracts.

Steve Hulsebus, Office Chief - Toll Bridge Roadway Design, requested this change order after discussing this matter with Bessie Papailias, Manager - SB/DVBE/Administration, Ruby Louie, Deputy District Director - External Affairs, and Dan McElhinney, Chief Deputy District Director - Toll Bridge Program. Their consensus was to remove these requirements from existing ongoing contracts through change orders.
The reasons are:
(a) The community (District Small Business Council and the Statewide Small Business Council) have not been asking for this information.
(b) Total DBE, SBE, and DVBE (as appropriate per contract) utilization is already collected at the end of each contract, and since there does not appear to be a need for real time data on this, knowing the final results at the end of the contract seems appropriate.
(c) Nothing is currently being done with the data collected to date.
(d) Saves money by not including in and removing from contracts.

Robert Kobal, HQs Construction Coordinator, concurs with this change. Design concurrence is not required for this change, as it does not affect the design. Maintenance concurrence is not required for this change, as it does not impact the maintenance or serviceability of the structure. Since none of the activities in this change meet any federal requirements, FHWA has determined that they will not participate in funding them.

Compensation for this work will be at Adjustment of Compensation at Agreed Lump Sum of $0.00, which can be financed from the contingency fund.

No adjustment of contract time is warranted by this change, as it does not affect the controlling operation.

CONCURRED BY:	
Construction Engineer: Lourdes David	Date 10/18/2004
Bridge Engineer:	Date
FHWA Representative:	Date
Project Engineer:	Date
Other (specify): Steve Hulsebus, Chief Toll Br Rdway Design	Date 10/15/2004
Robert Kobal, HQs Assist Construction Coordinator	Date 10/18/2004
Bessie Papailias, Manager - SB/DVBE/Administration	Date 10/15/2004
District Prior Approval By:	Date
HQ (Issue Approve) By: Sey Hossieh, HQs CCO Engr	Date 2/1/05
Resident Engineer's Signature:	Date

ESTIMATE OF COST

	THIS REQUEST	TOTAL TO DATE
ITEMS	$0.00	$0.00
FORCE ACCOUNT	$0.00	$0.00
AGREED PRICE	$0.00	$0.00
ADJUSTMENT	$0.00	$0.00
TOTAL	$0.00	$0.00

FEDERAL PARTICIPATION

☑ PARTICIPATING ☐ PARTICIPATING IN PART ☐ NONE
☐ NON-PARTICIPATING (MAINTENANCE) ☐ NON-PARTICIPATING

FEDERAL SEGREGATION (if more than one Funding Source or P.I.P. type)
☑ CCO FUNDED PER CONTRACT ☐ CCO FUNDED AS FOLLOWS

FEDERAL FUNDING SOURCE	PERCENT

CALIFORNIA
DEPARTMENT OF TRANSPORTATION

CONTRACT CHANGE ORDER NO. 07 **SUPPL. --**

ROAD **SF-80-12.6/13.2** SHEET **1** OF **1** SHEETS

FEDERAL NO.(S) **ACBRIM-080-1(097)N** CONTRACT NO. **04-0120R4**

To **C.C. Myers, Inc.** Contractor

You are hereby directed to make the herein described changes from the plans and specifications or do the following described work not included in the plans and specifications on this contract.

NOTE: This change order is not effective until approved by the Chief Engineer.

Description of work to be done, estimate of quantities, and prices to be paid. Segregate between additional work at contract price, agreed price and force account. Unless otherwise stated, rates for rental equipment cover only such time as equipment is actually used and no allowance will be made for idle time.

This Change is requested by the **ENGINEER.**

The last percentage shown is the net accumulated increase or decrease from the original in the Engineer's Estimate.

EXTRA WORK AT FORCE ACCOUNT:

Implement specific sampling and analytical procedures to determine whether Best Management Practices (BMPs) implemented on the construction site are preventing pollutants from exceeding water quality objectives, in accordance with Section 10-1.02 "Water Pollution Control", subsection "Sampling and Analytical Requirements", of the contract Special Provisions, and as authorized by the Engineer.

Storm water sampling and analysis will be paid for as extra work as provided for in Section 5-1.24 "Force Account Payment" of the Special Provisions, and Section 4-1.03D "Extra Work" of the Standard Specifications.

No payment will be made for the preparation, collection, analysis, and reporting of storm water samples required where appropriate BMPs are not implemented prior to a rain event, or if failure of a BMP is not corrected prior to a rain event.

Estimate of Extra Work at Force Account = $ 30,000.00

Estimated Cost **Decrease** **$ 0.00** **or Increase** **$ 30,000.00**

By reason of this order the time of completion will be adjusted as follows:	**0 DAYS**

Submitted by: _____ Date: 8-10-04
Kenneth Loncharich, Resident Engineer

Approval Recommended: _____ Date: 8-10-04
Kenneth Loncharich, Resident Engineer

Approved by: Chief Engineer _____ Date: 8/27/04

We, the undersigned contractor, have given careful consideration to the change proposed and hereby agree, if this proposal is approved, that we will provide all equipment, furnish all materials, except as may otherwise be noted above, and perform all services necessary for the work above specified, and will accept as full payment therefor the prices shown above.

Accepted, Date 8/24/04 Contractor **C.C. MYERS, INC.**

By _____ Title **DEWEY C. LEE, JR. Contract Administrator**

If the contractor does not sign acceptance of this order, his attention is directed to the requirements of the specifications as to proceeding with the ordered work and filing a written protest within the time therein specified.

HC-5 Word(Rev.6/94)

STATE OF CALIFORNIA - DEPARTMENT OF TRANSPORTATION

CONTRACT CHANGE ORDER MEMORANDUM

DC-CEM-4903(OLD HC-39 REV 6/93) CT#7541-3544-0

DATE: **August 5, 2004**

TO: **Amer Bata, SFOBB Construction Manager**

FROM: **Kenneth Loncharich, Resident Engineer**

FILE
E.A. **04-0120R4**
CO-RTE-PM **SF-80-12.6/13.2**
FED NO. **ACBRIM-080-1(097)N**

CCO NO.	SUPPLEMENT NO.	CATEGORY CODE:
007	**--**	**AWZZ**

CONTINGENCY BALANCE (including this change): **$ 3,699,520.50**

$ 30,000.00 **INCREASE**

HEADQUARTERS APPROVAL REQUIRED? YES ☐ NO ☒

SUPPLEMENTAL FUND PROVIDED **$ 30,000.00**

IS THIS REQUEST IN ACCORDANCE WITH ENVIRONMENTAL DOCUMENTS? YES ☒ NO ☐

THIS CHANGE ORDER PROVIDES FOR:

…compensating the Contractor for implementing specific storm water sampling and analytical procedures, in accordance with Section 10-1.02 "Water Pollution Control", subsection "Sampling and Analytical Requirements", of the contract Special Provisions, and as authorized by the Engineer.

The project has the potential to discharge non-visible pollutants in storm water from the construction site. The project Storm Water Pollution Prevention Plan (SWPPP) shall contain a Sampling and Analysis Plan (SAP) that describes the sampling and analysis strategy and schedule to be implemented on the project for monitoring and preventing non-visible pollutants from causing or contributing to exceedances of water quality objectives.

Storm water sampling and analysis will be paid for as extra work as provided for in Section 5-1.24 "Force Account Payment" of the Special Provisions, and Section 4-1.03D "Extra Work" of the Standard Specifications, for an estimated cost of $30,000.00. Supplemental funds have been provided for the work of this change in the amount of $30,000.00.

No payment will be made for the preparation, collection, analysis, and reporting of storm water samples required where appropriate BMPs are not implemented prior to a rain event, or if failure of a BMP is not corrected prior to a rain event.

Design and Maintenance concurrence is not required, as this work is temporary and anticipated by the contract documents

No adjustment of contract time is warranted by this change, as it does not affect the controlling operation.

RECEIVED 2004 NOV 15 00:08

RECEIVED

Amer, Bata, SFOBB CONSTRUCTION MANAGER	DATE	8/27/04
	DATE	
	DATE	
	DATE	
OTHER (Specify)	DATE	
	DATE	
DIST PRIOR APPROVAL BY	DATE	
HQ (ISSUE & APPROVE) (TO PROCEED) BY	DATE	
Kenneth Loncharich, RESIDENT ENGINEER	DATE	8-10-04

ESTIMATE OF COST

	THIS REQUEST	TOTAL TO DATE
ITEMS	$ 0.00	$ 0.00
FORCE ACCOUNT	$ 30,000.00	$ 30,000.00
AGREED PRICE	$ 0.00	$ 0.00
ADJUSTMENT	$ 0.00	$ 0.00
TOTAL	$ 30,000.00	$ 30,000.00

FEDERAL PARTICIPATION

☒ PARTICIPATING ☐ PARTICIPATING IN PART ☐ NONE
☐ NON-PARTICIPATING (Maintenance) ☐ NON-PARTICIPATING

FEDERAL SEGREGATION (If more than one funding source or P.I.P. type)

☒ CCO FUNDED PER CONTRACT ☐ CCO FUNDED AS FOLLOWS

FEDERAL FUNDING SOURCE	PERCENT

49.07.03

OF CALIFORNIA
ARTMENT OF TRANSPORTATION

CONTRACT CHANGE ORDER NO. 08 SUPPL. --

ROAD **SF-80-12.6/13.2** SHEET **1** OF **1** SHEETS

FEDERAL NO.(S) **ACBRIM-080-1(097)N** CONTRACT NO. **04-0120R4**

To **C.C. Myers, Inc.** Contractor

You are hereby directed to make the herein described changes from the plans and specifications or do the following described work not included in the plans and specifications on this contract.

NOTE: This change order is not effective until approved by the Chief Engineer.

Description of work to be done, estimate of quantities, and prices to be paid. Segregate between additional work at contract price, agreed price and force account. Unless otherwise stated, rates for rental equipment cover only such time as equipment is actually used and no allowance will be made for idle time.
This Change is requested by the **ENGINEER.**

The last percentage shown is the net accumulated increase or decrease from the original in the Engineer's Estimate.

EXTRA WORK AT FORCE ACCOUNT:

The cost of maintaining the temporary water pollution control practices for items identified on the approved Water Pollution Control Cost Break-Down shall be divided equally by the State and the Contractor in accordance with Section 10-1.02 "Water Pollution Control", subsection "Payment", of the contract Special Provisions, and as authorized by the Engineer.

Storm Water Pollution Prevention Plan (SWPPP) maintenance sharing will be paid for as extra work as provided for in Section 5-1.24 "Force Account Payment" of the Special Provisions, and Section 4-1.03D "Extra Work" of the Standard Specifications.

Cleanup, repair, removal, improper installation, and replacement of water pollution control practices damaged by the Contractor's negligence shall not be considered as included in the cost for performing maintenance.

Estimate of Extra Work at Force Account = $ 75,000.00

Estimated Cost Decrease $ 0.00 or Increase $ 75,000.00

By reason of this order the time of completion will be adjusted as follows:	**0 DAYS**

Submitted by: _____ Date: 8-10-04
Kenneth Loncharich, Resident Engineer

Approval Recommended: _____ Date: 8-10-04
Kenneth Loncharich, Resident Engineer

Approved by: Chief Engineer _____ Date: 8/27/04

We, the undersigned contractor, have given careful consideration to the change proposed and hereby agree, if this proposal is approved, that we will provide all equipment, furnish all materials, except as may otherwise be noted above, and perform all services necessary for the work above specified, and will accept as full payment therefor the prices shown above.

Accepted, Date 8/24/04 Contractor **C.C. MYERS, INC.**

By Dewey C Lee, Jr Title **DEWEY C. LEE, JR. Contract Administrator**

If the contractor does not sign acceptance of this order, his attention is directed to the requirements of the specifications as to proceeding with the ordered work and filing a written protest within the time therein specified.

HC-5 Word(Rev.6/94)

STATE OF CALIFORNIA - DEPARTMENT OF TRANSPORTATION

CONTRACT CHANGE ORDER MEMORANDUM

DC-CEM-4903(OLD HC-39 REV 6/93) CT#7541-3544-0

DATE: **August 5, 2004**

TO: **Amer Bata, SFOBB Construction Manager**	FILE: E.A. **04-0120R4**
FROM: **Kenneth Loncharich, Resident Engineer**	CO-RTE-PM **SF-80-12.6/13.2**
	FED NO. **ACBRIM-080-1(097)N**
CCO NO. **008** / SUPPLEMENT NO. **--** / CATEGORY CODE: **AWZZ**	CONTINGENCY BALANCE (including this change): **$ 3,699,520.50**
$ 75,000.00 **INCREASE**	HEADQUARTERS APPROVAL REQUIRED? YES ☐ NO ☒
SUPPLEMENTAL FUND PROVIDED **$ 75,000.00**	IS THIS REQUEST IN ACCORDANCE WITH ENVIRONMENTAL DOCUMENTS? YES ☒ NO ☐

THIS CHANGE ORDER PROVIDES FOR:

… the cost sharing of Storm Water Pollution Prevention Plan (SWPPP) maintenance between the Contractor and Caltrans as provided for in Section 10-1.02 "Water Pollution Control", subsection "Payment", of the contract Special Provisions, and as authorized by the Engineer.

Cleanup, repair, removal, improper installation, and replacement of water pollution control practices damaged by the Contractor's negligence shall not be considered as included in the cost for performing maintenance.

SWPPP maintenance sharing will be paid for as extra work as provided for in Section 5-1.24 "Force Account Payment" of the Special Provisions, and Section 4-1.03D "Extra Work" of the Standard Specifications, for an estimated cost of $75,000.00. Supplemental funds have been provided for the work of this change in the amount of $75,000.00.

Design and Maintenance concurrence is not required, as this work is temporary and anticipated by the contract documents

No adjustment of contract time is warranted by this change, as it does not affect the controlling operation.

RECEIVED 002 31 JUL 12 05

Amer, Bata, SFOBB CONSTRUCTION MANAGER	DATE 8/27/04
	DATE
	DATE
	DATE
OTHER (Specify)	DATE
	DATE
DISTRIBUTOR APPROVAL BY	DATE
HQ (ISSUE & APPROVE) (TO PROCEED) BY	DATE
Kenneth Loncharich, RESIDENT ENGINEER	DATE 8-26-04

ESTIMATE OF COST

	THIS REQUEST	TOTAL TO DATE
ITEMS	$ 0.00	$ 0.00
FORCE ACCOUNT	$ 75,000.00	$ 75,000.00
AGREED PRICE	$ 0.00	$ 0.00
ADJUSTMENT	$ 0.00	$ 0.00
TOTAL	$ 75,000.00	$ 75,000.00

FEDERAL PARTICIPATION

☒ PARTICIPATING ☐ PARTICIPATING IN PART ☐ NONE
☐ NON-PARTICIPATING (Maintenance) ☐ NON-PARTICIPATING

FEDERAL SEGREGATION(If more than one funding source or P.I.P. type)

☒ CCO FUNDED PER CONTRACT ☐ CCO FUNDED AS FOLLOWS

FEDERAL FUNDING SOURCE	PERCENT

49008.01

STATE OF CALIFORNIA - DEPARTMENT OF TRANSPORTATION

CONTRACT CHANGE ORDER

Change Requested by: Engineer

CCO 8	Suppl. No. 1	Contract No. 04 - 0120R4	Road SF-80-12.6/13.2	FED. AID LOC.:

To: **CC MYERS INC**

You are directed to make the following changes from the plans and specifications or do the following described work not included in the plans and specifications for this contract. ***NOTE: This change order is not effective until approved by the Engineer.***

Description of work to be done, estimate of quantities and prices to be paid. (Segregate between additional work at contract price, agreed price and force account.) Unless otherwise stated, rates for rental of equipment cover only such time as equipment is actually used and no allowance will be made for idle time. This last percentage shown is the net accumulated increase or decrease from the original quantity in the Engineer's Estimate.

Extra Work at Force Account:

Provide additional funds for maintaining the temporary water pollution control practices for items identified on the approved Water Pollution Control Cost Break-Down. Costs shall be divided equally by the State and the Contractor in accordance with Section 10-1.02 "Water Pollution Control", subsection "Payment", of the contract Special Provisions, and as authorizec by the Engineer.

Storm Water Pollution Prevention Plan (SWPPP) maintenance sharing will be paid for as extra work as provided for in Section 5-1.24 "Force Account Payment" of the Special Provisions, and Section 4-1.03D "Extra Work" of the Standard Specifications.

Estimated Cost of Extra Work at Force Account $25,000.00

RECEIVED
01 1386 JAN 13 10

Estimated Cost: Increase ☑ Decrease ☐ **$25,000.00**

By reason of this order the time of completion will be adjusted as follows: 0 days

Submitted by		
Signature	**Resident Engineer** BILL CASEY	**Date** 12-11-09
Approval Recommended by		
Signature Deanna Vilcheck	**Area Construction Manager** DEANNA VILCHECK	**Date** 12/14/09
Engineer Approval by		
Signature Deanna Vilcheck	**Area Construction Manager** DEANNA VILCHECK	**Date** 12/14/09

We the undersigned contractor, have given careful consideration to the change proposed and agree, if this proposal is approved, that we will provide all equipment, furnish the materials, except as may otherwise be noted above, and perform all services necessary for the work above specified, and will accept as full payment therefor the prices shown above.

NOTE: If you, the contractor, do not sign acceptance of this order, your attention is directed to the requirements of the specifications as to proceeding with the ordered work and filing a written protest within the time therein specified.

Contractor Acceptance by		
Signature N/A	**(Print name and title)** N/A	**Date** N/A

STATE OF CALIFORNIA - DEPARTMENT OF TRANSPORTATION

CONTRACT CHANGE ORDER MEMORANDUM

DATE: 12/1/2009

TO: MIKE FORNER / DEANNA VILCHECK	FILE: **E.A.** 04 - 0120R4
	CO-RTE-PM SF-80-12.6/13.2
FROM: BILL CASEY	**FED. NO.**
CCO#: **8** SUPPLEMENT#: **1** Category Code: **AWZZ**	CONTINGENCY BALANCE (incl. this change) **$44,775,334.59**
COST: **$25,000.00** INCREASE ☑ DECREASE ☐	HEADQUARTERS APPROVAL REQUIRED? ☐ YES ☑ NO
SUPPLEMENTAL FUNDS PROVIDED: **$0.00**	IS THIS REQUEST IN ACCORDANCE WITH ENVIRONMENTAL DOCUMENTS? ☑ YES ☐ NO
CCO DESCRIPTION: Add Funds SWPPP Maintenance Sharing	**PROJECT DESCRIPTION:** CONSTRUCT ROUTE 80 TEMP BYPASS STRUCTURE

Original Contract Time:	Time Adj. This Change:	Previously Approved CCO Time Adjustments:	Percentage Time Adjusted: (including this change)	Total # of Unreconciled Deferred Time CCO(s): (including this change)
475 Day(s)	**0** Day(s)	**1600** Day(s)	**337** %	**0**

THIS CHANGE ORDER PROVIDES FOR:

... additional funds for the cost sharing of Storm Water Pollution Prevention Plan (SWPPP) maintenance between the Contractor and Caltrans as provided for in Section 10-1.02 "Water Pollution Control", subsection "Payment", of the contract Special Provisions, and as authorized by the Engineer.

This project, the Yerba Buena Island Detour (YBID), was awarded in March 2004 to construct a detour that will allow for the tie in of the new east span of the San Francisco Oakland Bay Bridge to Yerba Buena Island. The YBID encompasses three main structures, the East Tie-In to the existing bridge, the West Tie-In (WTI) to Yerba Buena Island, and the Viaduct structure between the two tie ins.

Two separate Department strategy memorandums, dated December 14, 2006 and December 25, 2006, approved by Tony Anziano - Toll Bridge Program Manager and Richard Land - Chief Engineer, recommended that the Department assume responsibility for the designs of the East Tie-In (ETI) and West Tie-In (WTI) portions of this contract, and incorporated seismic retrofit work of the permanent Yerba Buena Island Transition Structure (YBITS) onto this project. The approval of these strategy memorandums extended the project completion date approximately 5 years.

Cleanup, repair, removal, improper installation, and replacement of water pollution control practices damaged by the Contractor's negligence shall not be considered as included in the cost for performing maintenance.

SWPPP maintenance sharing will be paid for as extra work as provided for in Section 5-1.24 "Force Account Payment" of the Special Provisions, and Section 4-1.03D "Extra Work" of the Standard Specifications, for an estimated cost of $25,000.00, which shall be financed from the contract's contingency funds. Supplemental work funds was provided to the contract for the work of this change in the amount of $75,000.00 which has since been expended. A cost estimate is on file in the project records.

The Contractor's signature is not required for additional funds for Extra Work at Force Account change orders. Therefore this change order is being issued unilaterally.

Design and Maintenance concurrence is not required, as this work is temporary and anticipated by the contract documents

No adjustment of contract time is warranted by this change, as it does not affect the controlling operation.

CONCURRED BY:		
Construction Engineer:	Bill Casey, Resident Engineer	Date 12-11-09
Bridge Engineer:		Date
Project Engineer:		Date
Project Manager:		Date
FHWA Rep.:		Date
Environmental:		Date
Other (specify):		Date
Other (specify):		Date
District Prior Approval By:		Date
HQ (Issue Approve) By:		Date
Resident Engineer's Signature:	12-11-09	Date

ESTIMATE OF COST

	THIS REQUEST	TOTAL TO DATE
ITEMS	$0.00	$0.00
FORCE ACCOUNT	$25,000.00	$100,000.00
AGREED PRICE	$0.00	$0.00
ADJUSTMENT	$0.00	$0.00
TOTAL	$25,000.00	$100,000.00

FEDERAL PARTICIPATION

☐ PARTICIPATING ☐ PARTICIPATING IN PART ☑ NONE
☐ NON-PARTICIPATING (MAINTENANCE) ☐ NON-PARTICIPATING

FEDERAL SEGREGATION (if more than one Funding Source or P.I.P. type)
☐ CCO FUNDED PER CONTRACT ☐ CCO FUNDED AS FOLLOWS

FEDERAL FUNDING SOURCE	PERCENT

ADA Notice: For individuals with sensory disabilities, this document is available in alternate formats. For information call: (916) 654-6410 or TDD (916) 654-3880 or write

STATE OF CALIFORNIA - DEPARTMENT OF TRANSPORTATION

CONTRACT CHANGE ORDER

Change Requested by: Engineer

CCO: 8	Suppl. No. 2	Contract No. 04 - 0120R4	Road SF-80-12.6/13.2	FED. AID LOC.:

To: CC MYERS INC

You are directed to make the following changes from the plans and specifications or do the following described work not included in the plans and specifications for this contract. ***NOTE: This change order is not effective until approved by the Engineer.***

Description of work to be done, estimate of quantities and prices to be paid. (Segregate between additional work at contract price, agreed price and force account.) Unless otherwise stated, rates for rental of equipment cover only such time as equipment is actually used and no allowance will be made for idle time. This last percentage shown is the net accumulated increase or decrease from the original quantity in the Engineer's Estimate.

Extra Work at Force Account:

Provide additional funds for the work specified under the original Change Order No. 8 and Change Order No. 8, Supplement No. 1.

Estimated cost of Extra Work at Force Account $80,000.00

Estimated Cost: Increase ☑ Decrease ☐ **$80,000.00**

By reason of this order the time of completion will be adjusted as follows: 0 days

Submitted by

Signature	Resident Engineer JEANNIE BALDERRAMOS	Date 9-7-10

Approval Recommended by

Signature	Senior Resident Engineer DEANNA VILCHECK	Date 9/9/10

Engineer Approval by

Signature	Area Construction Manager DEANNA VILCHECK	Date 9/9/10

We the undersigned contractor, have given careful consideration to the change proposed and agree, if this proposal is approved, that we will provide all equipment, furnish the materials, except as may otherwise be noted above, and perform all services necessary for the work above specified, and will accept as full payment therefor the prices shown above.

NOTE: If you, the contractor, do not sign acceptance of this order, your attention is directed to the requirements of the specifications as to proceeding with the ordered work and filing a written protest within the time therein specified.

Contractor Acceptance by

Signature NOT REQUIRED	(Print name and title)	Date

STATE OF CALIFORNIA
DEPARTMENT OF TRANSPORTATION

7

CONTRACT CHANGE ORDER NO. 09 **SUPPL.** --

ROAD **SF-80-12.6/13.2** SHEET 1 OF 1 SHEETS

FEDERAL NO.(S) **ACBRIM-080-1(097)N** CONTRACT NO. **04-0120R4**

To **C.C. Myers, Inc.** Contractor

You are hereby directed to make the herein described changes from the plans and specifications or do the following described work not included in the plans and specifications on this contract.

NOTE: This change order is not effective until approved by the Chief Engineer.

Description of work to be done, estimate of quantities, and prices to be paid. Segregate between additional work at contract price, agreed price and force account. Unless otherwise stated, rates for rental equipment cover only such time as equipment is actually used and no allowance will be made for idle time.

This Change is requested by the **ENGINEER.**

The last percentage shown is the net accumulated increase or decrease from the original in the Engineer's Estimate.

EXTRA WORK @ FORCE ACCOUNT:

Perform additional photo surveys of existing facilities not listed under Section 10-1.39, Photo Survey of Existing Facilities, as authorized by the Engineer.

The Contractor shall provide the Engineer with 6 copies of approved photo survey records.

Payment will be in accordance with Section 4-1.03D, Extra Work, of the Standard Specifications, and Section 5-1.24, Force Account Payment, of the Special Provisions, and no other compensation will be allowed therefor.

Estimated cost of Extra Work at Force Account .....$50,000.00.

Estimated Cost **Decrease** **$ 0.00** **or Increase** **$ 50,000.00**

By reason of this order the time of completion will be adjusted as follows:	**0 DAYS**

Submitted by: _____ Date: 7-14-04
Kenneth Loncharich, Resident Engineer

Approval Recommended: _____ Date: 7-14-04
Kenneth Loncharich, Resident Engineer

Approved by: Chief Engineer _____ Date: 9/13/04

We, the undersigned contractor, have given careful consideration to the change proposed and hereby agree, if this proposal is approved, that we will provide all equipment, furnish all materials, except as may otherwise be noted above, and perform all services necessary for the work above specified, and will accept as full payment therefor the prices shown above.

Accepted, Date 8/30/04 Contractor **C.C. MYERS, INC.**

By _____ Title **DEWEY C. LEE, JR.**
Contract Administrator

If the contractor does not sign acceptance of this order, his attention is directed to the requirements of the specifications as to proceeding with the ordered work and filing a written protest within the time therein specified.

HC-5 Word(Rev.6/94)

STATE OF CALIFORNIA - DEPARTMENT OF TRANSPORTATION

CONTRACT CHANGE ORDER MEMORANDUM

DC-CEM-4903(OLD HC-39 REV 6/93) CT#7541-3544-0

DATE: **September 10, 2004**

TO: **mer Bata, SFOBB Construction Manager**	FILE: E.A. **04-0120R4**
FROM: **Kenneth Loncharich, Resident Engineer**	CO-RTE-PM **SF-80-12.6/13.2**
	FED NO. **ACBRIM-080-1(097)N**
CCO NO. **09** / SUPPLEMENT NO. **--** / CATEGORY CODE: **AWZZ**	CONTINGENCY BALANCE (including this change): **$ 3,749,520.50**
$ 50,000.00 **INCREASE**	HEADQUARTERS APPROVAL REQUIRED? YES ☐ NO ☒
SUPPLEMENTAL FUND PROVIDED **$ 50,000.00**	IS THIS REQUEST IN ACCORDANCE WITH ENVIRONMENTAL DOCUMENTS? YES ☒ NO ☐

THIS CHANGE ORDER PROVIDES FOR:

...compensating the Contractor for performing additional photo surveys of existing facilities other than those facilities listed under Section 10-1.39 of the Special Provisions, and as authorized by the Engineer.

Section 10-1.39 of the Special Provisions states that additional photo survey's of existing facilities will be paid for as extra work as provided in Section 4-1.03D of the Standard Specifications. Additional existing facilities need to be surveyed.

The Contractor shall provide the Engineer with 6 copies of approved photo survey records.

This work will be done as Extra Work at Force Account at an estimated cost of $50,000.00, which will be financed from the supplemental funds provided for in this contract. Supplemental funds have been provided for this change in the amount of $50,000.00.

No adjustment of contract time is warranted by this change, as it does not affect the controlling operation.

Maintenance concurrence is not required, as this work is temporary and anticipated by the contract documents

The Resident Engineer recommends this change order be approved.

002139 RECEIVED JUL 12 05

Amer, Bata, SFOBB CONSTRUCTION MANAGER	DATE 9/13/04
	DATE
	DATE
	DATE
OTHER (Specify)	DATE
	DATE
DIST PRIOR APPROVAL BY	DATE
HQ (ISSUE & APPROVE) (TO PROCEED) BY	DATE
Kenneth Loncharich, RESIDENT ENGINEER for KL	DATE

ESTIMATE OF COST

	THIS REQUEST	TOTAL TO DATE
ITEMS	$ 0.00	$ 0.00
FORCE ACCOUNT	$ 50,000.00	$ 50,000.00
AGREED PRICE	$ 0.00	$ 0.00
ADJUSTMENT	$ 0.00	$ 0.00
TOTAL	$ $ 50,000.00	$ $ 50,000.00

FEDERAL PARTICIPATION

☒ PARTICIPATING ☐ PARTICIPATING IN PART ☐ NONE
☐ NON-PARTICIPATING (Maintenance) ☐ NON-PARTICIPATING

FEDERAL SEGREGATION (If more than one funding source or P.I.P. type)

☒ CCO FUNDED PER CONTRACT ☐ CCO FUNDED AS FOLLOWS

FEDERAL FUNDING SOURCE	PERCENT

49.009.03

STATE OF CALIFORNIA
DEPARTMENT OF TRANSPORTATION

CONTRACT CHANGE ORDER NO. 10 SUPPL. --

ROAD **SF-80-12.6/13.2** SHEET **1** OF **1** SHEETS

FEDERAL NO.(S) **ACBRIM-080-1(097)N** CONTRACT NO. **04-0120R4**

To **C.C. Myers, Inc.** Contractor

You are hereby directed to make the herein described changes from the plans and specifications or do the following described work not included in the plans and specifications on this contract.

NOTE: This change order is not effective until approved by the Chief Engineer.

Description of work to be done, estimate of quantities, and prices to be paid. Segregate between additional work at contract price, agreed price and force account. Unless otherwise stated, rates for rental equipment cover only such time as equipment is actually used and no allowance will be made for idle time.

This Change is requested by the **ENGINEER.**

The last percentage shown is the net accumulated increase or decrease from the original in the Engineer's Estimate.

EXTRA WORK @ FORCE ACCOUNT:

Provide temporary shuttle van service for transporting general public and passengers on Yerba Buena Island (YBI) in accordance with Section 10-1.135, Temporary Shuttle Van Service, of the Special Provisions and as approved by the Engineer.

Payment will be in accordance with Section 9-1.03, Force Account Payment, of the Standard Specifications.

Estimated cost of Extra Work at Force Account .....$650,000.00.

Estimated Cost **Decrease** **$ 0.00** **or Increase** **$ 650,000.00**

By reason of this order the time of completion will be adjusted as follows:	**0 DAYS**

Submitted by: _____ Date: 6-18-04
Kenneth Loncharich, Resident Engineer

Approval Recommended: _____ Date: 7-1-04
Kenneth Loncharich, Resident Engineer

Approved by: Chief Engineer _____ Date: 7/1/04

We, the undersigned contractor, have given careful consideration to the change proposed and hereby agree, if this proposal is approved, that we will provide all equipment, furnish all materials, except as may otherwise be noted above, and perform all services necessary for the work above specified, and will accept as full payment therefor the prices shown above.

Accepted, Date 6/22/04 Contractor **C.C. MYERS, INC.**

By _____ Title **DEWEY C. LEE, JR. Contract Administrator**

If the contractor does not sign acceptance of this order, his attention is directed to the requirements of the specifications as to proceeding with the ordered work and filing a written protest within the time therein specified.

HC-5 Word(Rev.6/94)

STATE OF CALIFORNIA - DEPARTMENT OF TRANSPORTATION

CONTRACT CHANGE ORDER MEMORANDUM

DC-CEM-4903(OLD HC-39 REV 6/93) CT#7541-3544-0

DATE: **July 14, 2004**

TO: **Amer Bata, SFOBB Construction Manager**

FROM: **Kenneth Loncharich, Resident Engineer**

CCO NO.	SUPPLEMENT NO.	CATEGORY CODE:
10	**--**	**AWZZ**

$ 650,000.00 **INCREASE**

SUPPLEMENTAL FUND PROVIDED: **$ 650,000.00**

FILE
E.A. **04-0120R4**
CO-RTE-PM **SF-80-12.6/13.2**
FED NO. **ACBRIM-080-1(097)N**

CONTINGENCY BALANCE (including this change): **$ 4,186,350.00**

HEADQUARTERS APPROVAL REQUIRED? YES ☐ NO ☒

IS THIS REQUEST IN ACCORDANCE WITH ENVIRONMENTAL DOCUMENTS? YES ☒ NO ☐

THIS CHANGE ORDER PROVIDES FOR:

…compensating the Contractor for providing temporary shuttle van service for transporting general public and passengers on Yerba Buena Island (YBI) in accordance with section 10-1.135 Temporary Shuttle Van Service of the Special Provisions and as approved by the Engineer.

The Contractor shall contract temporary shuttle van service to reduce the number of personal vehicles and to facilitate the construction of the bridge.

This work will be done as Extra Work at Force Account at an estimated cost of $650,000.00, which will be financed from the supplemental funds provided for in this contract. Supplemental funds have been provided for this change in the amount of $650,000.00.

This contract change order has been concurred by Nancy E. Bobb – FHWA Bay Bridge Project Oversight Manager and given a Record of Prior Approval to proceed with the work, dated June 30, 2004.

No adjustment of contract time is warranted by this change, as it does not affect the controlling operation.

Maintenance concurrence is not required, as this work is temporary and anticipated by the contract documents

The Resident Engineer recommends this change order be approved.

Amer, Bata, SFOBB CONSTRUCTION MANAGER — DATE 7/14/04

DATE

DATE

DATE

OTHER (Specify) — DATE

Nancy E. Bobb, FHWA Bay Bridge Project Manager 6/30/04

DATE

DIST PRIOR APPROVAL BY — DATE

HQ (ISSUE & APPROVE) (TO PROCEED) BY — DATE

Kenneth Loncharich, RESIDENT ENGINEER — DATE 7-14-04

ESTIMATE OF COST

	THIS REQUEST	TOTAL TO DATE
ITEMS	$ 0.00	$ 0.00
FORCE ACCOUNT	$ 650,000.00	$ 650,000.00
AGREED PRICE	$ 0.00	$ 0.00
ADJUSTMENT	$ 0.00	$ 0.00
TOTAL	$ $ 650,000.00	$ $ 650,000.00

FEDERAL PARTICIPATION

☒ PARTICIPATING ☐ PARTICIPATING IN PART ☐ NONE
☐ NON-PARTICIPATING (Maintenance) ☐ NON-PARTICIPATING

FEDERAL SEGREGATION (If more than one funding source or P.I.P. type)

☒ CCO FUNDED PER CONTRACT ☐ CCO FUNDED AS FOLLOWS

FEDERAL FUNDING SOURCE — PERCENT

49.10
49.010.03

STATE OF CALIFORNIA - DEPARTMENT OF TRANSPORTATION

CONTRACT CHANGE ORDER

Change Requested by: Engineer

CCO: 10	Suppl. No. 1	Contract No. 04 - 0120R4	Road SF-80-12.6/13.2	FED. AID LOC.: ACBRIM-080-1(097)N

To: **CC MYERS INC**

You are directed to make the following changes from the plans and specifications or do the following described work not included in the plans and specifications for this contract. ***NOTE: This change order is not effective until approved by the Engineer.***

Description of work to be done, estimate of quantities and prices to be paid. (Segregate between additional work at contract price, agreed price and force account.) Unless otherwise stated, rates for rental of equipment cover only such time as equipment is actually used and no allowance will be made for idle time. This last percentage shown is the net accumulated increase or decrease from the original quantity in the Engineer's Estimate.

Extra Work at Force Account:

Provide Additional Funds for providing temporary shuttle van service for transporting general public and passengers on Yerba Buena Island (YBI) in accordance with Section 10-1.135, "Temporary Shuttle Van Service", of the Special Provisions and as approved by the Engineer.

Estimated cost of Extra Work at Force Account $100,000.00

Estimated Cost: **Increase** ☑ **Decrease** ☐ **$100,000.00**

By reason of this order the time of completion will be adjusted as follows: 0 days

Submitted by

Signature	Resident Engineer: LOURDES DAVID	Date 6/21/05

Approval Recommended by

Signature	Construction Engineer: Manager AMER BATA	Date 6/21/05

Engineer Approval by

Signature	(Print name and title) PETER SIEGENTHALER - Chief	Date 6/21/05

We the undersigned contractor, have given careful consideration to the change proposed and agree, if this proposal is approved, that we will provide all equipment, furnish the materials, except as may otherwise be noted above, and perform all services necessary for the work above specified, and will accept as full payment therefor the prices shown above.

NOTE: If you, the contractor, do not sign acceptance of this order, your attention is directed to the requirements of the specifications as to proceeding with the ordered work and filing a written protest within the time therein specified.

Contractor Acceptance by

Signature	(Print name and title)	Date
Unilateral (signature not required)		

STATE OF CALIFORNIA - DEPARTMENT OF TRANSPORTATION

CONTRACT CHANGE ORDER MEMORANDUM

DATE: 6/20/2005 Page 1 of 1

TO: AMER BATA / LOURDES DAVID	FILE: **E.A.** 04 - 0120R4
FROM: LOURDES DAVID	**CO-RTE-PM** SF-80-12.6/13.2
	FED. NO. ACBRIM-080-1(097)N
CCO#: **10** SUPPLEMENT#: **1** Category Code: **AWZZ**	CONTINGENCY BALANCE (incl. this change): **$1,283,063.79**
COST: **$100,000.00** INCREASE ☑ DECREASE ☐	HEADQUARTERS APPROVAL REQUIRED? ☑ YES ☐ NO
SUPPLEMENTAL FUNDS PROVIDED: **$0.00**	IS THIS REQUEST IN ACCORDANCE WITH ENVIRONMENTAL DOCUMENTS? ☑ YES ☐ NO
CCO DESCRIPTION: Add funds Temporary Shuttle Van Service	**PROJECT DESCRIPTION:** CONSTRUCT ROUTE 80 TEMP BYPASS STRUCTURE

LOCATION: IN THE CITY AND COUNTY OF SAN FRANCISCO FROM YERBA BUENA TUNNEL TO 0.6 KM EAST OF THE YERBA BUENA TUNNEL

THIS CHANGE ORDER PROVIDES FOR:

Additional Funds.

Portions of the contract work were suspended from July 1, 2004 to October 1, 2004 under CCO 14. Other portions of the contract work were suspended from September 3, 2004 through March 31, 2005 under CCO 24. Though some of the previously suspended work is now progressing, some of the work is still under suspension. This new suspension will be addressed in CCO 24 - Supplement 2, which is currently being negotiated.

Because of these various partial suspensions, the extent of required temporary shuttle service has become greater than the contract originally anticipated. This change order provides additional funding for that extended demand for temporary shuttle service. It is also possible that more additional funding will be required for temporary shuttle service, once the full suspension affect has been determined.

Design and Maintenance concurrence is not required, as this change does not affect the final design.

Though supplemental funds have been provided for this work in the amount of $650,000.00, the original change order utilized all of these funds. Therefore, the additional payment for this work will be at Extra Work at Force Account for an estimated cost of $100,000.00, which can be financed from the contingency fund.

The Contractor's signature is not required for additional funds for Extra Work at Force Account change orders. Therefore this change order is being issued unilaterally.

No adjustment of the contract time is warranted, as this change does not affect the controlling operation.

CONCURRED BY:	
Construction Engineer: Lourdes David	Date 6/15/2005
Bridge Engineer:	Date
FHWA Representative:	Date
Project Engineer:	Date
Other (specify):	Date
	Date
	Date
District Prior Approval By:	Date
HQ (Issue Approve) By:	Date
Resident Engineer's Signature:	Date 6/21/05

ESTIMATE OF COST

	THIS REQUEST	TOTAL TO DATE
ITEMS	$0.00	$0.00
FORCE ACCOUNT	$100,000.00	$750,000.00
AGREED PRICE	$0.00	$0.00
ADJUSTMENT	$0.00	$0.00
TOTAL	$100,000.00	$750,000.00

FEDERAL PARTICIPATION

☑ PARTICIPATING ☐ PARTICIPATING IN PART ☐ NONE
☐ NON-PARTICIPATING (MAINTENANCE) ☐ NON-PARTICIPATING

FEDERAL SEGREGATION (if more than one Funding Source or P.I.P. type)
☑ CCO FUNDED PER CONTRACT ☐ CCO FUNDED AS FOLLOWS

FEDERAL FUNDING SOURCE	PERCENT

STATE OF CALIFORNIA
DEPARTMENT OF TRANSPORTATION

CONTRACT CHANGE ORDER NO. 11 **SUPPL. --**

ROAD **SF-80-12.6/13.2** SHEET **1** OF **2** SHEETS

FEDERAL NO.(S) **ACBRIM-080-1(097)N** CONTRACT NO. **04-0120R4**

To **C.C. Myers, Inc.** Contractor

You are hereby directed to make the herein described changes from the plans and specifications or do the following described work not included in the plans and specifications on this contract.

NOTE: This change order is not effective until approved by the Chief Engineer.

Description of work to be done, estimate of quantities, and prices to be paid. Segregate between additional work at contract price, agreed price and force account. Unless otherwise stated, rates for rental equipment cover only such time as equipment is actually used and no allowance will be made for idle time.

This Change is requested by the **ENGINEER.**

The last percentage shown is the net accumulated increase or decrease from the original in the Engineer's Estimate.

EXTRA WORK AT FORCE ACCOUNT:

The following work will be performed in accordance with Section 10-1.22 "Obstructions", Section 10-1.38 "Existing Highway Facilities", of the Special Provisions, and as authorized by the Engineer:

1. Preserve, maintain, or relocate utilities deemed necessary by the Engineer when not shown on the Contract Plans or in the Special Provisions.

2. Provide assistance in exposing and identifying existing utilities not shown on the Contract Plans or in the Special Provisions.

3. Remove and dispose of utilities determined to be abandoned by the Engineer. Disposal will be in accordance with Section 7-1.13 Disposal of Material Outside the Highway Right of Way of the Standard Specifications.

This work will be paid for in accordance with Section 5-1.24 "Force Account Payment" of the Special Provisions and Section 4-1.03D "Extra Work" of the Standard Specifications.

Compensation for delays resulting from this work will be made in accordance with Section 8-1.09 Right of Way Delays of the Standard Specifications.

Consideration of a time adjustment will be deferred until completion of work specified herein. Determination of a commensurate time extension will be made in accordance with Section 8-1.07 Liquidated Damages of the Standard Specifications.

Estimate of Extra Work at Force Account = $ 100,000.00

Estimated Cost **Decrease** **$ 0.00** **or Increase** **$ 100,000.00**

By reason of this order the time of completion will be adjusted as follows:	**DEFERRED**

Submitted by: _____ Date: 7/29/04
Kenneth Loncharich, Resident Engineer

Approval Recommended: _____ Date: 7/29/04
Kenneth Loncharich, Resident Engineer

Approved by: Chief Engineer _____ Date: 9/2/04

We, the undersigned contractor, have given careful consideration to the change proposed and hereby agree, if this proposal is approved, that we will provide all equipment, furnish all materials, except as may otherwise be noted above, and perform all services necessary for the work above specified, and will accept as full payment therefor the prices shown above.

Accepted, Date 8/13/04 Contractor **C.C. MYERS, INC.**

By _____ Title **DEWEY C. LEE, JR. Contract Administrator**

If the contractor does not sign acceptance of this order, his attention is directed to the requirements of the specifications as to proceeding with the ordered work and filing a written protest within the time therein specified.

HC-5 Word(Rev.6/94)

STATE OF CALIFORNIA - DEPARTMENT OF TRANSPORTATION

CONTRACT CHANGE ORDER MEMORANDUM

DATE: 5/28/2004 Page 1 of 1

AMER BATA / KENNETH LONCHARICH	FILE: **E.A.** 04 - 0120R4
FROM: KENNETH LONCHARICH	**CO-RTE-PM** SF-80-12.6/13.2
	FED. NO. ACBRIM-080-1(097)N
CCO#: **11** SUPPLEMENT#: **0** Category Code: **AWZZ**	CONTINGENCY BALANCE (incl. this change): **$4,186,350.00**
COST: ~~$50,000.00~~ 100,000.00 INCREASE ☑ DECREASE ☐	HEADQUARTERS APPROVAL REQUIRED? ☐ YES ☑ NO
SUPPLEMENTAL FUNDS PROVIDED: **$100,000.00**	IS THIS REQUEST IN ACCORDANCE WITH ENVIRONMENTAL DOCUMENTS? ☑ YES ☐ NO
CCO DESCRIPTION: Utility Potholing	**PROJECT DESCRIPTION:** CONSTRUCT ROUTE 80 TEMP BYPASS STRUCTURE

LOCATION: IN THE CITY AND COUNTY OF SAN FRANCISCO FROM YERBA BUENA TUNNEL TO 0.6 KM EAST OF THE YERBA BUENA TUNNEL

THIS CHANGE ORDER PROVIDES FOR:

Preserving, maintaining, or relocating utilities; removing and disposing of abandoned existing utilities in accordance with Section 10-1.38 Existing Highway Facilities, subsection Existing Underground Facilities (Temporary Bypass Structure), and Section 10-1.22 Obstructions of the Special Provisions, and as authorized by the Engineer.

This project provides for the construction of a temporary bypass structure in the City and County of San Francisco from Yerba Buena Tunnel to portions of the existing Route 80 viaduct (Bridge No. 34-0004). This work includes the construction of foundations, substructures, temporary support structures, superstructure, bridge barriers, bridge deck drain systems, and all appurtenant items, which are shown on the contract Layout Plans.

Past experience on an adjacent SFOBB project (04-0120Q4) has indicated the existence of utilities not shown on the plans to be either abandoned or still active, which required preservation, maintenance, relocation, disposal, or removal. This CCO will provide the necessary funds to allow the Engineer to take the appropriate actions regarding existing utilities not indicated in the Contract Plans or Special Provisions.

This work will be performed under Extra Work at Force Account for an estimated cost of $100,000.00. Supplemental funds have been provided for the work of this change in the amount of $550,000.00.

Compensation for delays resulting from this work will be made in accordance with Section 8-1.09 "Right of Way Delays" of the Standard Specifications.

Any time adjustments relating to this work will be deferred as it may impact the controlling operation.

CONCURRED BY:	
Construction Engineer: Ken Loncharich	Date 7/28/2004
Bridge Engineer:	Date
FHWA Representative:	Date
Project Engineer:	Date
Other (specify):	Date
	Date
	Date
District Prior Approval By:	Date
HQ (Issue Approve) By:	Date
Resident Engineer's Signature:	Date 9/13/04

ESTIMATE OF COST

	THIS REQUEST	TOTAL TO DATE
ITEMS	$0.00	$0.00
FORCE ACCOUNT	$100,000.00	$100,000.00
AGREED PRICE	$0.00	$0.00
ADJUSTMENT	$0.00	$0.00
TOTAL	$100,000.00	$100,000.00

FEDERAL PARTICIPATION

☑ PARTICIPATING ☐ PARTICIPATING IN PART ☐ NONE
☐ NON-PARTICIPATING (MAINTENANCE) ☐ NON-PARTICIPATING

FEDERAL SEGREGATION (if more than one Funding Source or P.I.P. type)
☑ CCO FUNDED PER CONTRACT ☐ CCO FUNDED AS FOLLOWS

FEDERAL FUNDING SOURCE	PERCENT

STATE OF CALIFORNIA - DEPARTMENT OF TRANSPORTATION

CONTRACT CHANGE ORDER

Change Requested by: Engineer

CCO 11	Suppl. No. 1	Contract No. 04 - 0120R4	Road SF-80-12.6/13.2	FED. AID LOC.:

To: **CC MYERS INC**

You are directed to make the following changes from the plans and specifications or do the following described work not included in the plans and specifications for this contract. ***NOTE: This change order is not effective until approved by the Engineer.***

Description of work to be done, estimate of quantities and prices to be paid. (Segregate between additional work at contract price, agreed price and force account.) Unless otherwise stated, rates for rental of equipment cover only such time as equipment is actually used and no allowance will be made for idle time. This last percentage shown is the net accumulated increase or decrease from the original quantity in the Engineer's Estimate.

Extra Work at Force Account:

Provide additional funds to perform the following work in accordance with Section 10-1.22 "Obstructions", Section 10-1.38 "Existing Highway Facilities", of the Special Provisions, and as authorized by the Engineer:

1. Preserve, maintain, or relocate utilities deemed necessary by the Engineer when not shown on the Contract Plans or in the Special Provisions.

2. Provide assistance in exposing and identifying existing utilities not shown on the Contract Plans or in the Special Provisions.

3. Remove and dispose of utilities determined to be abandoned by the Engineer. Disposal will be in accordance with Section 7-1.13 Disposal of Material Outside the Highway Right of Way of the Standard Specifications.

This work will be paid for in accordance with Section 5-1.24 "Force Account Payment" of the Special Provisions and Section 4-1.03D "Extra Work" of the Standard Specifications.

Estimated Cost of Extra Work at Force Account $25,000.00

RECEIVED
JUN 21 2010
011471

Estimated Cost: **Increase** ☑ **Decrease** ☐ **$25,000.00**

By reason of this order the time of completion will be adjusted as follows: 0 days

Submitted by		
Signature	**Resident Engineer** BILL CASEY	**Date** 12-11-09
Approval Recommended by		
Signature Deanna Vilcheck	**Area Construction Manager** DEANNA VILCHECK	**Date** 12/14/09
Engineer Approval by		
Signature Deanna Vilcheck	**Area Construction Manager** DEANNA VILCHECK	**Date** 12/14/09

We the undersigned contractor, have given careful consideration to the change proposed and agree, if this proposal is approved, that we will provide all equipment, furnish the materials, except as may otherwise be noted above, and perform all services necessary for the work above specified, and will accept as full payment therefor the prices shown above.

NOTE: If you, the contractor, do not sign acceptance of this order, your attention is directed to the requirements of the specifications as to proceeding with the ordered work and filing a written protest within the time therein specified.

Contractor Acceptance by		
Signature N/A	**(Print name and title)** N/A	**Date** N/A

STATE OF CALIFORNIA - DEPARTMENT OF TRANSPORTATION

CONTRACT CHANGE ORDER MEMORANDUM

TO: MIKE FORNER / DEANNA VILCHECK	FILE: E.A. 04 - 0120R4
	CO-RTE-PM SF-80-12.6/13.2
FROM: BILL CASEY	FED. NO.
CCO#: 11 SUPPLEMENT#: 1 Category Code: AWZZ	CONTINGENCY BALANCE (incl. this change) **$44,754,317.59**
COST: **$25,000.00** INCREASE ☑ DECREASE ☐	HEADQUARTERS APPROVAL REQUIRED? ☐ YES ☑ NO
SUPPLEMENTAL FUNDS PROVIDED: **$0.00**	IS THIS REQUEST IN ACCORDANCE WITH ENVIRONMENTAL DOCUMENTS? ☑ YES ☐ NO
CCO DESCRIPTION: Add Funds for Utility Potholing	**PROJECT DESCRIPTION:** CONSTRUCT ROUTE 80 TEMP BYPASS STRUCTURE

Original Contract Time:	Time Adj. This Change:	Previously Approved CCO Time Adjustments:	Percentage Time Adjusted: (including this change)	Total # of Unreconciled Deferred Time CCO(s): (including this change)
475 Day(s)	**0** Day(s)	**1600** Day(s)	**337** %	**0**

THIS CHANGE ORDER PROVIDES FOR:

...providing additional funds for preserving, maintaining, or relocating utilities; removing and disposing of abandoned existing utilities in accordance with Section 10-1.38 Existing Highway Facilities, subsection Existing Underground Facilities (Temporary Bypass Structure), and Section 10-1.22 Obstructions of the Special Provisions, and as authorized by the Engineer.

This project, the Yerba Buena Island Detour (YBID), was awarded in March 2004 to construct a detour that will allow for the tie in of the new east span of the San Francisco Oakland Bay Bridge to Yerba Buena Island. The YBID encompasses three main structures, the East Tie-In to the existing bridge, the West Tie-In (WTI) to Yerba Buena Island, and the Viaduct structure between the two tie ins.

Two separate Department strategy memorandums, dated December 14, 2006 and December 25, 2006, approved by Tony Anziano - Toll Bridge Program Manager and Richard Land - Chief Engineer, recommended that the Department assume responsibility for the designs of the East Tie-In (ETI) and West Tie-In (WTI) portions of this contract, and incorporated seismic retrofit work of the permanent Yerba Buena Island Transition Structure (YBITS) onto this project. The approval of these strategy memorandums extended the project completion date approximately 5 years.

Past experience on this contract has indicated the existence of utilities not shown on the plans to be either abandoned or still active, which required preservation, maintenance, relocation, disposal, or removal. This CCO will provide additional funds to allow the Engineer to continue taking the appropriate actions regarding existing utilities not indicated in the Contract Plans or Special Provisions.

This work will be performed under Extra Work at Force Account for an estimated cost of $25,000.00, which shall be financed from the contract's contingency funds. Supplemental work funds was provided to the contract for the work of this change in the amount of $100,000.00, which has since been expended. A cost estimate is on file in the project records.

The Contractor's signature is not required for additional funds for Extra Work at Force Account change orders. Therefore this change order is being issued unilaterally.

Design and Maintenance concurrence is not required, as this work is temporary and anticipated by the contract documents

No adjustment of contract time is warranted by this change, as it does not affect the controlling operation.

ADA Notice: For individuals with sensory disabilities, this document is available in alternate formats. For information call: (916) 654-6410 or TDD (916) 654-3880 or write

CONCURRED BY:	
Construction Engineer: Bill Casey, Resident Engineer	Date 12-11-09
Bridge Engineer:	Date
Project Engineer:	Date
Project Manager:	Date
FHWA Rep.:	Date
Environmental:	Date
Other (specify):	Date
Other (specify):	Date
District Prior Approval By:	Date
HQ (Issue Approve) By:	Date
Resident Engineer's Signature:	Date 12-11-09

ESTIMATE OF COST

	THIS REQUEST	TOTAL TO DATE
ITEMS	$0.00	$0.00
FORCE ACCOUNT	$25,000.00	$125,000.00
AGREED PRICE	$0.00	$0.00
ADJUSTMENT	$0.00	$0.00
TOTAL	$25,000.00	$125,000.00

FEDERAL PARTICIPATION

☐ PARTICIPATING ☐ PARTICIPATING IN PART ☑ NONE
☐ NON-PARTICIPATING (MAINTENANCE) ☐ NON-PARTICIPATING

FEDERAL SEGREGATION (if more than one Funding Source or P.I.P. type)
☐ CCO FUNDED PER CONTRACT ☐ CCO FUNDED AS FOLLOWS

FEDERAL FUNDING SOURCE	PERCENT

ADA Notice: For individuals with sensory disabilities, this document is available in alternate formats. For information call: (916) 654-6410 or TDD (916) 654-3880 or write

STATE OF CALIFORNIA - DEPARTMENT OF TRANSPORTATION

CONTRACT CHANGE ORDER

Change Requested by: Engineer

CCO: 11	Suppl. No. 2	Contract No. 04 - 0120R4	Road SF-80-12.6/13.2	FED. AID LOC.:

To: **CC MYERS INC**

You are directed to make the following changes from the plans and specifications or do the following described work not included in the plans and specifications for this contract. ***NOTE: This change order is not effective until approved by the Engineer.***

Description of work to be done, estimate of quantities and prices to be paid. (Segregate between additional work at contract price, agreed price and force account.) Unless otherwise stated, rates for rental of equipment cover only such time as equipment is actually used and no allowance will be made for idle time. This last percentage shown is the net accumulated increase or decrease from the original quantity in the Engineer's Estimate.

Extra Work at Force Account:

Provide additional funds to perform the work specified under CCO No.11

Estimated cost of Extra Work at Force Account $25,000.00

Estimated Cost: **Increase** ☑ **Decrease** ☐ **$25,000.00**

By reason of this order the time of completion will be adjusted as follows: 0 days

Submitted by

Signature	Resident Engineer	Date
Jeannette Balderramos	JEANNIE BALDERRAMOS	2-15-11

Approval Recommended by

Signature	Area Construction Manager	Date
Deanna Vilcheck	DEANNA VILCHECK	2-15-11

Engineer Approval by

Signature	Acting Area Construction Manager	Date
Deanna Vilcheck	DEANNA VILCHECK	2-15-11

We the undersigned contractor, have given careful consideration to the change proposed and agree, if this proposal is approved, that we will provide all equipment, furnish the materials, except as may otherwise be noted above, and perform all services necessary for the work above specified, and will accept as full payment therefor the prices shown above.

NOTE: If you, the contractor, do not sign acceptance of this order, your attention is directed to the requirements of the specifications as to proceeding with the ordered work and filing a written protest within the time therein specified.

Contractor Acceptance by

Signature	(Print name and title)	Date
NOT REQUIRED		

STATE OF CALIFORNIA - DEPARTMENT OF TRANSPORTATION

CONTRACT CHANGE ORDER

Change Requested by: Engineer

CCO: 12	Suppl. No. 0	Contract No. 04 - 0120R4	Road SF-80-12.6/13.2	FED. AID LOC.: ACBRIM-080-1(097)N

To. CC MYERS INC

You are directed to make the following changes from the plans and specifications or do the following described work not included in the plans and specifications for this contract. ***NOTE: This change order is not effective until approved by the Engineer.***

Description of work to be done, estimate of quantities and prices to be paid. (Segregate between additional work at contract price, agreed price and force account.) Unless otherwise stated, rates for rental of equipment cover only such time as equipment is actually used and no allowance will be made for idle time. This last percentage shown is the net accumulated increase or decrease from the original quantity in the Engineer's Estimate.

Adjustment of Compensation at Force Account:

Reimburse the contractor for providing mandatory formal joint training class on rapid strength concrete in accordance with Section 10-1.53, "Replace Concrete Pavement (Rapid Strength Concrete) - Just-In-Time Training", of the Special Provisions.

It is noted herein that per Section 10-1.53, compensation for providing Just-In-Time Training (JITT) will be made in conformance with the provisions in Section 9 1.03, "Force Account Payment," of the Standard Specifications, except no markups shall be added, and the Contractor will be paid for one half of the JITT cost. Costs for providing JITT shall include training materials, class site, and the JITT instructor including the JITT instructor's travel, lodging, meals and presentation materials. All costs incurred by the Contractor or Engineer for attending JITT shall be borne by the party incurring the costs.

Estimated cost of Adjustment of Compensation at Force Account $5,000.00

Estimated Cost: **Increase** ☑ **Decrease** ☐ **$5,000.00**

By reason of this order the time of completion will be adjusted as follows: 0 days

Submitted by

Signature	Resident Engineer: LOURDES DAVID	Date 11-10-04

Approval Recommended by

Signature	Construction Engineer: LOURDES DAVID	Date 11-10-04

Engineer Approval by

Signature	(Print name and title) LOURDES DAVID - Construction Engineer	Date 1-28-05

We the undersigned contractor, have given careful consideration to the change proposed and agree, if this proposal is approved, that we will provide all equipment, furnish the materials, except as may otherwise be noted above, and perform all services necessary for the work above specified, and will accept as full payment therefor the prices shown above.

NOTE: If you, the contractor, do not sign acceptance of this order, your attention is directed to the requirements of the specifications as to proceeding with the ordered work and filing a written protest within the time therein specified.

Contractor Acceptance by

Signature	(Print name and title) DEWEY C. LEE, JR. Contract Administrator	Date 12/17/04

STATE OF CALIFORNIA - DEPARTMENT OF TRANSPORTATION

CONTRACT CHANGE ORDER MEMORANDUM

TO: AMER BATA / LOURDES DAVID	FILE: **E.A.** 04 - 0120R4
FROM: LOURDES DAVID	**CO-RTE-PM** SF-80-12.6/13.2
	FED. NO. ACBRIM-080-1(097)N
CCO#: **12** SUPPLEMENT#: **0** Category Code: **CJSA**	CONTINGENCY BALANCE (incl. this change): **$3,692,837.80**
COST: **$5,000.00** INCREASE ☑ DECREASE ☐	HEADQUARTERS APPROVAL REQUIRED? ☐ YES ☑ NO
SUPPLEMENTAL FUNDS PROVIDED: **$0.00**	IS THIS REQUEST IN ACCORDANCE WITH ENVIRONMENTAL DOCUMENTS? ☑ YES ☐ NO
CCO DESCRIPTION: Just-In-Time Training (RSC Pavement)	**PROJECT DESCRIPTION:** CONSTRUCT ROUTE 80 TEMP BYPASS STRUCTURE

LOCATION: IN THE CITY AND COUNTY OF SAN FRANCISCO FROM YERBA BUENA TUNNEL TO 0.6 KM EAST OF THE YERBA BUENA TUNNEL

THIS CHANGE ORDER PROVIDES FOR:

reimbursing the contractor for providing mandatory formal joint training class on rapid strength concrete in accordance with Section 10-1.53, "Replace Concrete Pavement (Rapid Strength Concrete) - Just-In-Time Training", of the Special Provisions.

Section 10-1.53 provides for reimbursement of costs of providing a formal joint training class on rapid strength concrete. This change order provides the funds for this reimbursement.

The costs for this training will be paid for as Adjustment of Compensation for Item 59, "Replace Concrete Pavement (Rapid Strength Concrete)", at Force Account for an estimated total cost of $5,000.00, which can be financed from the contingency fund.

Design and Maintenance concurrence is not required as this work is anticipated by the contract documents.

No adjustment of contract time is warranted by this change, as it does not affect the controlling operation.

CONCURRED BY:	
Construction Engineer: Lourdes David	Date 11/8/2004
Bridge Engineer:	Date
FHWA Representative:	Date
Project Engineer:	Date
Other (specify):	Date
	Date
	Date
District Prior Approval By:	Date
HQ (Issue Approve) By:	Date
Resident Engineer's Signature:	Date 11-10-04

ESTIMATE OF COST

	THIS REQUEST	TOTAL TO DATE
ITEMS	$0.00	$0.00
FORCE ACCOUNT	$0.00	$0.00
AGREED PRICE	$0.00	$0.00
ADJUSTMENT	$5,000.00	$5,000.00
TOTAL	$5,000.00	$5,000.00

FEDERAL PARTICIPATION

☑ PARTICIPATING ☐ PARTICIPATING IN PART ☐ NONE
☐ NON-PARTICIPATING (MAINTENANCE) ☐ NON-PARTICIPATING

FEDERAL SEGREGATION (if more than one Funding Source or P.I.P. type)
☑ CCO FUNDED PER CONTRACT ☐ CCO FUNDED AS FOLLOWS

FEDERAL FUNDING SOURCE	PERCENT

STATE OF CALIFORNIA
DEPARTMENT OF TRANSPORTATION

CONTRACT CHANGE ORDER NO. 13 **SUPPL. --**

ROAD **SF-80-12.6/13.2** SHEET **1** OF **4** SHEETS

FEDERAL NO.(S) **ACBRIM-080-1(097)N** CONTRACT NO. **04-0120R4**

To **C.C. Myers, Inc.** Contractor

You are hereby directed to make the herein described changes from the plans and specifications or do the following described work not included in the plans and specifications on this contract.

NOTE: This change order is not effective until approved by the Chief Engineer.

Description of work to be done, estimate of quantities, and prices to be paid. Segregate between additional work at contract price, agreed price and force account. Unless otherwise stated, rates for rental equipment cover only such time as equipment is actually used and no allowance will be made for idle time.

This Change is requested by the **ENGINEER.**

The last percentage shown is the net accumulated increase or decrease from the original in the Engineer's Estimate.

Provide support and services for the Document Management System as outlined on sheets 2 through 4 of this contract change order and as authorized by the Engineer.

EXTRA WORK @ FORCE ACCOUNT:

Software technical support, software customization, training sessions, data input support for the Department, and network copier support (excluding paper and staples), will be paid for as extra work as provided for in Section 4-1.03D, "Extra Work", of the Standard Specifications and Section 5-1.24, "Force Account Payment", of the contract Special Provisions.

Cost of Extra Work at Force Account = $240,000.00

EXTRA WORK @ AGREED LUMP SUM PRICE:

Hardware, server support, software, concurrent user licenses, annual maintenance – 1st and 2nd year, and add-on software will be paid for as extra work at agreed lump sum.

Cost of Extra Work at Agreed Lump Sum = $246,743.50

The amount paid for the Document Management System under force account and agreed lump sum shall include full compensation for furnishing all labor, material, tools, equipment, and incidentals, including software, and for doing all work involved in providing and maintaining the Document Management System as described; including instructing and assisting the Engineer in the use of the computer software as directed by the Engineer.

DOCUMENT MANAGEMENT SYSTEM

As authorized by the Engineer, the Contractor shall provide a complete Document Control System (hardware and software) to facilitate efficient document management and control. The Contractor and the Engineer shall use the Document Management System for all documents created and received during the life of the project, which may include, but are not limited to, submittals, transmittals, shop drawings and calculations, Request for Information (RFI), letters, memorandums, working drawings and plan sheets.

COMPUTER SYSTEM

The Contractor shall provide a complete computer system (hardware and software) to use for the Document Management System. The minimum computer system to be furnished shall be complete with keyboard, mouse, and monitor. Any modification to the Document Management System, including hardware and software, must have prior written authorization from the Engineer. The system shall be from those identified by the Gartner Group as Tier 1 and shall conform to the following requirements:

HARDWARE REQUIREMENTS

A. Latest industry-available Intel Pentium Xeon processor or equivalent, in dual processor configuration at 2.8 GHz or faster.
B. Latest computer server operating system software compatible with the selected processor and associated hardware, Windows 2000 server with 20 client licenses (CAL's) or equivalent.
C. Minimum of 2 gigabytes of Random Access Memory (RAM).
D. Internal disk system with 800 Gigabytes storage with a RAID (Level 5) controller, one 1.44–megabyte 90 mm (3.5-inch) floppy disk drive and one DVD ROM/CD-RW or equivalent.
E. Tape Backup unit (100/200 Gigabyte) and 20 backup tapes.
F. Two Ethernet Network Interface Cards (NIC), 1000/100 Mbit or equivalent.
G. Fax/modem, V-90 or equivalent.
H. Network Attached Storage (NAS) device, minimum 800 Gigabytes
I. Uninterruptible power supply (minimum battery backup time of 15 minutes).
J. A 430 mm (17") minimum, color monitor capable of at least 1,024 x 768 pixels.
K. The network copier shall be a multifunction, Adobe Postscript Level 3 or compatible, copier/scanner/laser printer with a minimum of 128 megabytes RAM. The scanner shall have a minimum resolution of 24 dots per millimeter x 24 dots per millimeter (600 dots per inch x 600 dots per inch), scan black and white documents at a minimum of 55 pages per minute and shall be capable of scanning images to the TIF (tagged image format) and PDF (Adobe Portable Document Format) file formats. The scanner shall have the ability for the user to name the scanned documents using the network copier keypad. The network copier shall be able to scan, copy, and print in letter, legal, and 280mm x 432 mm (11" x 17") paper sizes and shall have the capability of being connected to a network with 10/100 Mbit Ethernet.
L. Provide service contracts for the scanner-copier-printer combinations. The volume to be used for calculation of the service agreement shall be 15,000 copies per month. The service contracts shall be for the duration of this contract change order.

SOFTWARE REQUIREMENTS

A. General software shall be the latest versions of Microsoft Office Professional, McAfee VirusScan virus protection or equivalent and tape backup software. The general software shall be compatible with the hardware provided.
B. One (1) Document Management System software, including 45 licenses and 45 annual maintenance renewal fees until 30 days after Contractor has received the final estimate. All requests for additional licenses and annual maintenance renewal fees in excess of those initially requested must receive prior written authorization from the Engineer. The software for use to implement the Document Management System must be a commercially available software package.

DELIVERY AND SETUP

Attention is directed to "Training" of this specification.
Prior to ordering the computer system, the Contractor shall submit, for approval by the Engineer, a detailed list of the computer hardware and software the Contractor proposes to furnish. The Engineer will have 3 working days to review and approve the Contractor's proposal.
Upon approval by the Engineer, the Contractor shall furnish, install, set up ready-for-use, maintain, and repair the computer system, including all client software installations, as necessary until 30 days after the Contractor has received the final estimate, at locations determined by the Engineer. The approved representative of the Document Management System shall coordinate with the Department's IT staff to establish the proper integration of the server into the State Network. The Document Management System technical support and repair shall be performed by an authorized representative of the Document Management System. The hardware and software shall be installed and ready for use no later than 30 days after approval of the CCO. Software maintenance, including licensing and other fees shall be maintained for 30 days after the Contractor has received the final estimate.
The Contractor shall instruct and assist the Engineer in the use of the hardware and software. Hardware repairs shall be made within 48 hours of notification by the Engineer, or replacement equipment shall be furnished and installed by the Contractor until repairs have been completed.
Computer hardware and software furnished shall remain the property of the Contractor and shall not be removed until 30 days after the Contractor has received the final estimate, or earlier as authorized by the Engineer.
The Contractor shall furnish software and all original software instruction manuals to the Engineer. The State will compensate the Contractor for replacement of software which is damaged, lost or stolen after delivery to the engineer.

TRAINING

Attention is directed to "Delivery and Setup" and "Data Delivery Requirements" of this specification.
Training shall be performed by an approved representative of the Document Management System provider. All training shall occur only after prior written authorization by the Engineer. As authorized by the Engineer and prior to the release of a new version of the Document Control Software, training shall be provided to the Document Control staff of both the Contractor and the Engineer.

DATA DELIVERY REQUIREMENTS

All data shall be transmitted between the Contractor and the Engineer in their original format and electronically as stated elsewhere in the contract Special Provisions and in this specification. When transmitting electronically, the documents shall be on CD-R (Compact Disc – Recordable) or reusable USB Flash drives and shall be compatible with the Document Management System hardware and software and with general hardware running Microsoft Windows operating system.

The electronic files shall conform to the following requirements:

A. The CD-R or the Flash drive shall contain the electronic document(s) in a searchable Adobe Portable Documents Format (PDF) unless authorized by the Engineer.
B. When scanned, the electronic documents shall be scanned to their original size.
C. The minimum resolution for the electronic PDF shall be 12 dots per millimeter (300 dots per inch) and the minimum color depth shall be 256 colors.
D. Each plan sheet shall or working drawing shall consist of one electronic PDF file.
E. Each PDF electronic file shall not exceed 50 pages.

The Contractor shall not be relieved of the requirements of Section 5-1.01 "WORKING DRAWINGS" of the contract Special Provisions.

The Document Management System shall also provide a method of exporting all data to the relational database, Microsoft Access, keeping all the existing relationships intact. This export function should be accessible by the user and should be able to be performed at any time by the user.

Estimated Cost **Decrease** **$ 0.00** **or Increase** **$ 486,743.50**

By reason of this order the time of completion will be adjusted as follows:	**0 DAYS**

Submitted by: _____ Date: 9/14/04
Kenneth Loncharich, Resident Engineer

Approval Recommended: _____ Date: 9/14/04
Kenneth Loncharich, Resident Engineer

Approved by: Chief Engineer _____ Date: 11/1/04

We, the undersigned contractor, have given careful consideration to the change proposed and hereby agree, if this proposal is approved, that we will provide all equipment, furnish all materials, except as may otherwise be noted above, and perform all services necessary for the work above specified, and will accept as full payment therefor the prices shown above.

Accepted, Date 10/05/04 Contractor **C.C. MYERS, INC.**

By _____ Title President

If the contractor does not sign acceptance of this order, his attention is directed to the requirements of the specifications as to proceeding with the ordered work and filing a written protest within the time therein specified.

HC-5 Word(Rev.6/94)

STATE OF CALIFORNIA - DEPARTMENT OF TRANSPORTATION

CONTRACT CHANGE ORDER MEMORANDUM

DC-CEM-4903(OLD HC-39 REV 6/93) CT#7541-3544-0

DATE: **August 10, 2004**

TO: **Amer Bata, SFOBB Construction Manager**	FILE
FROM: **Kenneth Loncharich, Resident Engineer**	E.A. **04-0120R4** CO-RTE-PM **SF-80-12.6/13.2** FED NO. **ACBRIM-080-1(097)N**
CCO NO. **13** / SUPPLEMENT NO. **--** / CATEGORY CODE: **CXSA**	CONTINGENCY BALANCE (including this change): **$ 3,699,606.50**
$ 486,743.50 **INCREASE**	HEADQUARTERS APPROVAL REQUIRED? YES ☒ NO ☐
SUPPLEMENTAL FUND PROVIDED **$ 0.00**	IS THIS REQUEST IN ACCORDANCE WITH ENVIRONMENTAL DOCUMENTS? YES ☒ NO ☐

THIS CHANGE ORDER PROVIDES FOR:

The Contractor to provide a complete Document Management System (hardware & software), to facilitate efficient document management and control on the project through its joint use by the Contractor and the Engineer on a multitude of documents. The Contractor and the Engineer shall use the system for all documents during the life off the project, which may include, but are not limited to, submittals, transmittals, shop drawings, and calculations, Request for Information (RFI)s, letters, memorandums, working drawings, and plans sheets.

For software technical support, and software customization of this change order, the Contractor will be paid extra work at force account for an estimated cost of $240,000.00, and for hardware, server and copier support, software, concurrent user licenses, annual maintenance – 1st and 2nd year, add-on software, training sessions, and data input support of this change order will be paid for as extra work at agreed lump sum for a cost of $246,743.50. Cost analysis is available on file in the project records.

No adjustment of the contract time is warranted, as this change does not affect the controlling operation.

Maintenance concurrence is not required as this does not change the final product being constructed. FHWA concurrence was obtained from Nancy Bobb on June 30, 2004.

The Resident Engineer recommends this change order be approved.

001030

Amer Bata, SFOBB CONSTRUCTION MANAGER — DATE 6/17/04	**ESTIMATE OF COST**
Janet Adams, PROJECT MANAGER — DATE 4/23/04	
DATE	
DATE	
OTHER (Specify) — DATE	**FEDERAL PARTICIPATION**
DATE	☒ PARTICIPATING ☐ PARTICIPATING IN PART ☐ NONE ☐ NON-PARTICIPATING (Maintenance) ☐ NON-PARTICIPATING
DIST PRIOR APPROVAL BY: — DATE	**FEDERAL SEGREGATION** (If more than one funding source or P.I.P. type)
HQ (ISSUE & APPROVE) (TO PROCEED) BY — DATE	☒ CCO FUNDED PER CONTRACT ☐ CCO FUNDED AS FOLLOWS
Kenneth Loncharich, RESIDENT ENGINEER — DATE 8-10-04	FEDERAL FUNDING SOURCE — PERCENT

	THIS REQUEST	TOTAL TO DATE
ITEMS	$ 0.00	$ 0.00
FORCE ACCOUNT	$ 240,000.00	$ 240,000.00
AGREED PRICE	$ 246,743.50	$ 246,743.50
ADJUSTMENT	$ 0.00	$ 0.00
TOTAL	$ $ 486,743.50	$ $ 486,743.50

49.03

STATE OF CALIFORNIA
DEPARTMENT OF TRANSPORTATION

CONTRACT CHANGE ORDER NO. 13 **SUPPL. --**

ROAD **SF-80-12.6/13.2** SHEET **1** OF **4** SHEETS

FEDERAL NO.(S) **ACBRIM-080-1(097)N** CONTRACT NO. **04-0120R4**

To **C.C. Myers, Inc.** Contractor

You are hereby directed to make the herein described changes from the plans and specifications or do the following described work not included in the plans and specifications on this contract.

NOTE: This change order is not effective until approved by the Chief Engineer.

Description of work to be done, estimate of quantities, and prices to be paid. Segregate between additional work at contract price, agreed price and force account. Unless otherwise stated, rates for rental equipment cover only such time as equipment is actually used and no allowance will be made for idle time.

This Change is requested by the **ENGINEER.**

The last percentage shown is the net accumulated increase or decrease from the original in the Engineer's Estimate.

Provide support and services for the Document Management System as outlined on sheets 2 through 4 of this contract change order and as authorized by the Engineer.

EXTRA WORK @ FORCE ACCOUNT:

Software technical support, software customization, training sessions, data input support for the Department, and network copier support (excluding paper and staples), will be paid for as extra work as provided for in Section 4-1.03D, "Extra Work", of the Standard Specifications and Section 5-1.24, "Force Account Payment", of the contract Special Provisions.

Cost of Extra Work at Force Account = $240,000.00

EXTRA WORK @ AGREED LUMP SUM PRICE:

Hardware, server support, software, concurrent user licenses, annual maintenance – 1st and 2nd year, and add-on software will be paid for as extra work at agreed lump sum.

Cost of Extra Work at Agreed Lump Sum = $246,743.50

The amount paid for the Document Management System under force account and agreed lump sum shall include full compensation for furnishing all labor, material, tools, equipment, and incidentals, including software, and for doing all work involved in providing and maintaining the Document Management System as described; including instructing and assisting the Engineer in the use of the computer software as directed by the Engineer.

DOCUMENT MANAGEMENT SYSTEM

As authorized by the Engineer, the Contractor shall provide a complete Document Control System (hardware and software) to facilitate efficient document management and control. The Contractor and the Engineer shall use the Document Management System for all documents created and received during the life of the project, which may include, but are not limited to, submittals, transmittals, shop drawings and calculations, Request for Information (RFI), letters, memorandums, working drawings and plan sheets.

COMPUTER SYSTEM

The Contractor shall provide a complete computer system (hardware and software) to use for the Document Management System. The minimum computer system to be furnished shall be complete with keyboard, mouse, and monitor. Any modification to the Document Management System, including hardware and software, must have prior written authorization from the Engineer. The system shall be from those identified by the Gartner Group as Tier 1 and shall conform to the following requirements:

HARDWARE REQUIREMENTS

A. Latest industry-available Intel Pentium Xeon processor or equivalent, in dual processor configuration at 2.8 GHz or faster.
B. Latest computer server operating system software compatible with the selected processor and associated hardware, Windows 2000 server with 20 client licenses (CAL's) or equivalent.
C. Minimum of 2 gigabytes of Random Access Memory (RAM).
D. Internal disk system with 800 Gigabytes storage with a RAID (Level 5) controller, one 1.44–megabyte 90 mm (3.5-inch) floppy disk drive and one DVD ROM/CD-RW or equivalent.
E. Tape Backup unit (100/200 Gigabyte) and 20 backup tapes.
F. Two Ethernet Network Interface Cards (NIC), 1000/100 Mbit or equivalent.
G. Fax/modem, V-90 or equivalent.
H. Network Attached Storage (NAS) device, minimum 800 Gigabytes
I. Uninterruptible power supply (minimum battery backup time of 15 minutes).
J. A 430 mm (17") minimum, color monitor capable of at least 1,024 x 768 pixels.
K. The network copier shall be a multifunction, Adobe Postscript Level 3 or compatible, copier/scanner/laser printer with a minimum of 128 megabytes RAM. The scanner shall have a minimum resolution of 24 dots per millimeter x 24 dots per millimeter (600 dots per inch x 600 dots per inch), scan black and white documents at a minimum of 55 pages per minute and shall be capable of scanning images to the TIF (tagged image format) and PDF (Adobe Portable Document Format) file formats. The scanner shall have the ability for the user to name the scanned documents using the network copier keypad. The network copier shall be able to scan, copy, and print in letter, legal, and 280mm x 432 mm (11" x 17") paper sizes and shall have the capability of being connected to a network with 10/100 Mbit Ethernet.
L. Provide service contracts for the scanner-copier-printer combinations. The volume to be used for calculation of the service agreement shall be 15,000 copies per month. The service contracts shall be for the duration of this contract change order.

SOFTWARE REQUIREMENTS

A. General software shall be the latest versions of Microsoft Office Professional, McAfee VirusScan virus protection or equivalent and tape backup software. The general software shall be compatible with the hardware provided.
B. One (1) Document Management System software, including 45 licenses and 45 annual maintenance renewal fees until 30 days after Contractor has received the final estimate. All requests for additional licenses and annual maintenance renewal fees in excess of those initially requested must receive prior written authorization from the Engineer. The software for use to implement the Document Management System must be a commercially available software package.

DELIVERY AND SETUP

Attention is directed to "Training" of this specification.
Prior to ordering the computer system, the Contractor shall submit, for approval by the Engineer, a detailed list of the computer hardware and software the Contractor proposes to furnish. The Engineer will have 3 working days to review and approve the Contractor's proposal.
Upon approval by the Engineer, the Contractor shall furnish, install, set up ready-for-use, maintain, and repair the computer system, including all client software installations, as necessary until 30 days after the Contractor has received the final estimate, at locations determined by the Engineer. The approved representative of the Document Management System shall coordinate with the Department's IT staff to establish the proper integration of the server into the State Network. The Document Management System technical support and repair shall be performed by an authorized representative of the Document Management System. The hardware and software shall be installed and ready for use no later than 30 days after approval of the CCO. Software maintenance, including licensing and other fees shall be maintained for 30 days after the Contractor has received the final estimate.
The Contractor shall instruct and assist the Engineer in the use of the hardware and software. Hardware repairs shall be made within 48 hours of notification by the Engineer, or replacement equipment shall be furnished and installed by the Contractor until repairs have been completed.
Computer hardware and software furnished shall remain the property of the Contractor and shall not be removed until 30 days after the Contractor has received the final estimate, or earlier as authorized by the Engineer.
The Contractor shall furnish software and all original software instruction manuals to the Engineer. The State will compensate the Contractor for replacement of software which is damaged, lost or stolen after delivery to the engineer.

TRAINING

Attention is directed to "Delivery and Setup" and "Data Delivery Requirements" of this specification.
Training shall be performed by an approved representative of the Document Management System provider. All training shall occur only after prior written authorization by the Engineer. As authorized by the Engineer and prior to the release of a new version of the Document Control Software, training shall be provided to the Document Control staff of both the Contractor and the Engineer.

DATA DELIVERY REQUIREMENTS

All data shall be transmitted between the Contractor and the Engineer in their original format and electronically as stated elsewhere in the contract Special Provisions and in this specification. When transmitting electronically, the documents shall be on CD-R (Compact Disc – Recordable) or reusable USB Flash drives and shall be compatible with the Document Management System hardware and software and with general hardware running Microsoft Windows operating system.

The electronic files shall conform to the following requirements:

A. The CD-R or the Flash drive shall contain the electronic document(s) in a searchable Adobe Portable Documents Format (PDF) unless authorized by the Engineer.
B. When scanned, the electronic documents shall be scanned to their original size.
C. The minimum resolution for the electronic PDF shall be 12 dots per millimeter (300 dots per inch) and the minimum color depth shall be 256 colors.
D. Each plan sheet shall or working drawing shall consist of one electronic PDF file.
E. Each PDF electronic file shall not exceed 50 pages.

The Contractor shall not be relieved of the requirements of Section 5-1.01 "WORKING DRAWINGS" of the contract Special Provisions.

The Document Management System shall also provide a method of exporting all data to the relational database, Microsoft Access, keeping all the existing relationships intact. This export function should be accessible by the user and should be able to be performed at any time by the user.

Estimated Cost **Decrease** **$ 0.00** **or Increase** **$ 486,743.50**

By reason of this order the time of completion will be adjusted as follows:	**0 DAYS**

Submitted by: _____ Date: 9/14/04
Kenneth Loncharich, Resident Engineer

Approval Recommended: _____ Date: 9/14/04
Kenneth Loncharich, Resident Engineer

Approved by: Chief Engineer _____ Date: 11/1/04

We, the undersigned contractor, have given careful consideration to the change proposed and hereby agree, if this proposal is approved, that we will provide all equipment, furnish all materials, except as may otherwise be noted above, and perform all services necessary for the work above specified, and will accept as full payment therefor the prices shown above.

Accepted, Date 10/05/04 Contractor **C.C. MYERS, INC.**

By _____ Title President

If the contractor does not sign acceptance of this order, his attention is directed to the requirements of the specifications as to proceeding with the ordered work and filing a written protest within the time therein specified.

HC-5 Word(Rev.6/94)

STATE OF CALIFORNIA - DEPARTMENT OF TRANSPORTATION

CONTRACT CHANGE ORDER

Change Requested by: Engineer

CCO 13	Suppl. No. 1	Contract No. 04 - 0120R4	Road SF-80-12.6/13.2	FED. AID LOC.: ACBRIM-080-1(097)N

To: CC MYERS INC

You are directed to make the following changes from the plans and specifications or do the following described work not included in the plans and specifications for this contract. ***NOTE: This change order is not effective until approved by the Engineer.***

Description of work to be done, estimate of quantities and prices to be paid. (Segregate between additional work at contract price, agreed price and force account.) Unless otherwise stated, rates for rental of equipment cover only such time as equipment is actually used and no allowance will be made for idle time. This last percentage shown is the net accumulated increase or decrease from the original quantity in the Engineer's Estimate.

Extra Work at Force Account:

Provide additional funds for software technical support and other services of the Document Management System per the original Contract Change Order No. 13 and as authorized by the Engineer.

Estimated Cost of Extra Work at Force Account $300,000.00

007266 MAR 25 08

RECEIVED

Estimated Cost: Increase ☑ Decrease ☐ **$300,000.00**

By reason of this order the time of completion will be adjusted as follows: 0 days

Submitted by

Signature	Resident Engineer	Date
[signature]	BILL CASEY	3-7-08

Approval Recommended by

Signature	Area Construction Manager	Date
[signature]	DENNIS TURCHON	3/7/08

Engineer Approval by

Signature	Area Construction Manager	Date
[signature]	DENNIS TURCHON	3/18/08

We the undersigned contractor, have given careful consideration to the change proposed and agree, if this proposal is approved, that we will provide all equipment, furnish the materials, except as may otherwise be noted above, and perform all services necessary for the work above specified, and will accept as full payment therefor the prices shown above.

NOTE: If you, the contractor, do not sign acceptance of this order, your attention is directed to the requirements of the specifications as to proceeding with the ordered work and filing a written protest within the time therein specified.

Contractor Acceptance by

Signature	(Print name and title)	Date
NOT APPLICABLE	N/A	N/A

49.1351.01

STATE OF CALIFORNIA - DEPARTMENT OF TRANSPORTATION

CONTRACT CHANGE ORDER MEMORANDUM

TO: MIKE FORNER / DENNIS TURCHON	FILE: E.A. 04 - 0120R4
	CO-RTE-PM SF-80-12.6/13.2
FROM: BILL CASEY	FED. NO. ACBRIM-080-1(097)N
CCO#: 13 SUPPLEMENT#: 1 Category Code: CXSA	CONTINGENCY BALANCE (incl. this change) **$74,078,284.82**
COST: **$300,000.00** INCREASE ☑ DECREASE ☐	HEADQUARTERS APPROVAL REQUIRED? ☑ YES ☐ NO
SUPPLEMENTAL FUNDS PROVIDED: **$0.00**	IS THIS REQUEST IN ACCORDANCE WITH ENVIRONMENTAL DOCUMENTS? ☑ YES ☐ NO
CCO DESCRIPTION: Add Funds for PMIV Document System	**PROJECT DESCRIPTION:** CONSTRUCT ROUTE 80 TEMP BYPASS STRUCTURE

Original Contract Time:	Time Adj. This Change:	Previously Approved CCO Time Adjustments:	Percentage Time Adjusted: (including this change)	Total # of Unreconciled Deferred Time CCO(s): (including this change)
475 Day(s)	**0** Day(s)	**1195** Day(s)	**252** %	**7**

THIS CHANGE ORDER PROVIDES FOR:

Providing additional funds for software technical support and other services of the Document Management System.

The original contract change order provided for a complete Document Management System (hardware & software), to facilitate efficient document management and control on the project through its joint use by the Contractor and the Engineer on a multitude of documents. The Contractor and the Engineer shall use the system for all documents during the life of the project, which may include, but are not limited to, submittals, transmittals, shop drawings, and calculations, Request for Information (RFI)s, letters, memorandums, working drawings, and plans sheets.

Two separate Department strategy memorandums, issued on December 14, 2006 and December 25, 2006, and approved by Tony Anziano - Toll Bridge Program Manager, Richard Land - Chief Engineer, and the Toll Bridge Program Oversight Committee (TBPOC), resulted in additional work being added and other work being re-sequenced on this project. This strategy led the contract to be extended through late 2010, approximately 5 years past the original completion date.

This change order is necessary to continue the licenses and software technical support services required to maintain the Document Management System in place for its joint use by the Contractor and State since the original funds allotted have been depleted.

For this work, the Contractor will be compensated at Extra Work at Force Account for an estimated cost of $300,000.00. A cost analysis is on file in the project records.

The Contractor's signature is not required for additional funds for Extra Work at Force Account change orders. Therefore this change order is being issued unilaterally.

No adjustment of the contract time is warranted, as this change does not affect the controlling operation.

This change was concurred by Alec Melkonians - Asst. Project Manager. Maintenance concurrence is not required as this does not affect the final product being constructed.

The Resident Engineer recommends this change order be approved.

ADA Notice: For individuals with sensory disabilities, this document is available in alternate formats. For information call: (916) 654-6410 or TDD (916) 654-3880 or write Records and Forms Management, 1120 N Street, MS-89, Sacramento, CA 95814.

CONCURRED BY:			
Construction Engineer:	Mahantesh Anigol, Dist. Rep	Date	3/11/08
Bridge Engineer:		Date	
Project Engineer:		Date	
Project Manager:	Alec Melkonians	Date	3/5/08
FHWA Rep.:		Date	
Environmental:		Date	
Other (specify):	Chris Master, Toll Bridge	Date	11/29/07
Other (specify):		Date	
District Prior Approval By:		Date	
HQ (Issue Approve) By:	Ken Darby, HQ CCO Engineer	Date	3/10/08
Resident Engineer's Signature:		Date	3-7-08

ESTIMATE OF COST

	THIS REQUEST	TOTAL TO DATE
ITEMS	$0.00	$0.00
FORCE ACCOUNT	$300,000.00	$540,000.00
AGREED PRICE	$0.00	$246,743.50
ADJUSTMENT	$0.00	$0.00
TOTAL	$300,000.00	$786,743.50

FEDERAL PARTICIPATION

☐ PARTICIPATING ☐ PARTICIPATING IN PART ☐ NONE
☐ NON-PARTICIPATING (MAINTENANCE) ☑ NON-PARTICIPATING

FEDERAL SEGREGATION (if more than one Funding Source or P.I.P. type)
☑ CCO FUNDED PER CONTRACT ☐ CCO FUNDED AS FOLLOWS

FEDERAL FUNDING SOURCE	PERCENT

ADA Notice: For individuals with sensory disabilities, this document is available in alternate formats. For information call: (916) 654-6410 or TDD (916) 654-3880 or write Records and Forms Management, 1120 N Street, MS-89, Sacramento, CA 95814.

CONTRACT CHANGE ORDER

Change Requested by: Engineer

CCO: 13	Suppl. No. 2	Contract No. 04 - 0120R4	Road SF-80-12.6/13.2	FED. AID LOC.:

To: **CC MYERS INC**

You are directed to make the following changes from the plans and specifications or do the following described work not included in the plans and specifications for this contract. ***NOTE: This change order is not effective until approved by the Engineer.***

Description of work to be done, estimate of quantities and prices to be paid. (Segregate between additional work at contract price, agreed price and force account.) Unless otherwise stated, rates for rental of equipment cover only such time as equipment is actually used and no allowance will be made for idle time. This last percentage shown is the net accumulated increase or decrease from the original quantity in the Engineer's Estimate.

Extra Work at Force Account:

Provide additional funds for the work specified under the original Change Order No. 13 and CCO No. 13 Supplement 1.

Estimated cost of Extra Work at Force Account $100,000.00

Estimated Cost: Increase ☑ Decrease ☐ **$100,000.00**

By reason of this order the time of completion will be adjusted as follows: 0 days

Submitted by:

Signature	Resident Engineer	Date
Jeannie Balderrama	JEANNIE BALDERRAMOS	7/2/10

Approved/Recommended by:

Signature	Area Construction Manager	Date
Deanna Vilcheck	DEANNA VILCHECK	7/2/10

Engineer Approval by:

Signature	Area Construction Manager	Date
Deanna Vilcheck	DEANNA VILCHECK	7/7/10

We the undersigned contractor, have given careful consideration to the change proposed and agree, if this proposal is approved, that we will provide all equipment, furnish the materials, except as may otherwise be noted above, and perform all services necessary for the work above specified, and will accept as full payment therefor the prices shown above.

NOTE: If you, the contractor, do not sign acceptance of this order, your attention is directed to the requirements of the specifications as to proceeding with the ordered work and filing a written protest within the time therein specified.

Contractor Acceptance by:

Signature	(Print name and title)	Date
NOT REQUIRED		

STATE OF CALIFORNIA
DEPARTMENT OF TRANSPORTATION

CONTRACT CHANGE ORDER NO. 14 **SUPPL. --**

ROAD **SF-80-12.6/13.2** SHEET **1** OF **1** SHEETS

FEDERAL NO.(S) **ACBRIM-080-1(097)N** CONTRACT NO. **04-0120R4**

To **C.C. Myers, Inc.** Contractor

You are hereby directed to make the herein described changes from the plans and specifications or do the following described work not included in the plans and specifications on this contract.

NOTE: This change order is not effective until approved by the Chief Engineer.

Description of work to be done, estimate of quantities, and prices to be paid. Segregate between additional work at contract price, agreed price and force account. Unless otherwise stated, rates for rental equipment cover only such time as equipment is actually used and no allowance will be made for idle time. This Change is requested by the **ENGINEER.**

The last percentage shown is the net accumulated increase or decrease from the original in the Engineer's Estimate.

NO COST CHANGE ORDER:

In accordance with Section 8-1.05 "Temporary Suspension of Work," of the Standard Specifications, portions of the contract are temporarily suspended, effective April 9, 2004. The date Area GR is available to the Contractor as Specified in Section 5-1.18, "Areas for Contractor Use", of the Special Provisions, is revised from July 1, 2004 to October 1, 2004. Construction operations within area GR will be rescheduled and / or re-sequenced since this area will not be available to the Contractor until October 1, 2004.

The suspension will be in effect through July 9, 2004 and the first chargeable working day will be July 10, 2004.

During the temporary suspension, unaffected portions of work can still proceed with the approval of the Engineer.

It has been determined that this suspension will benefit the State and the Contractor, therefore, in accordance with Section 10-1.20 "Time Related Overhead," of the Special Provisions, the lump sum bid item for Time Related Overhead will not be adjusted. The days in which the suspension is in effect will not be considered working days. There will be no other compensation including but not limited to, inefficiencies, "right of way" delays, escalation of labor, material and equipment costs, all overheads, underutilization of equipment, and any other costs whatsoever by reason of this change.

Estimated Cost **Decrease** **$ 0.00** **or Increase** **$ 0.00**

By reason of this order the time of completion will be adjusted as follows:	**0 DAYS**
Submitted by: Kenneth Loncharich, Resident Engineer	Date: 5-3-04
Approval Recommended: Kenneth Loncharich, Resident Engineer	Date: 5-5-04
Approved by: Chief Engineer	Date: 5-5-04

We, the undersigned contractor, have given careful consideration to the change proposed and hereby agree, if this proposal is approved, that we will provide all equipment, furnish all materials, except as may otherwise be noted above, and perform all services necessary for the work above specified, and will accept as full payment therefor the prices shown above.

Accepted, Date 5/4/04 Contractor **C.C. MYERS, INC.**

By Dewey C Lee, Jr Title **DEWEY C. LEE, JR. Contract Administrator**

If the contractor does not sign acceptance of this order, his attention is directed to the requirements of the specifications as to proceeding with the ordered work and filing a written protest within the time therein specified.

HC-5 Word(Rev.6/94)

STATE OF CALIFORNIA - DEPARTMENT OF TRANSPORTATION

CONTRACT CHANGE ORDER MEMORANDUM

DC-CEM-4903(OLD HC-39 REV 6/93) CT#7541-3544-0

DATE: **May 5, 2004**

TO: **Amer Bata, SFOBB Construction Manager**

FROM: **Kenneth Loncharich, Resident Engineer**

FILE

E.A. **04-0120R4**

CO-RTE-PM **SF-80-12.6/13.2**

FED NO. **ACBRIM-080-1(097)N**

CCO NO.	SUPPLEMENT NO.	CATEGORY CODE:
014	**--**	**CGAC**

CONTINGENCY BALANCE (including this change): **$ 4,266,350.00**

$ 0.00 **INCREASE**

HEADQUARTERS APPROVAL REQUIRED? YES ☐ NO ☒

SUPPLEMENTAL FUND PROVIDED **$ 0.00**

IS THIS REQUEST IN ACCORDANCE WITH ENVIRONMENTAL DOCUMENTS? YES ☒ NO ☐

THIS CHANGE ORDER PROVIDES FOR:

...the temporary suspension of portions of work in accordance with Section 8-1.05 "Temporary Suspension of Work," of the Standard Specifications, effective April 9, 2004. . The date Area GR is available to the Contractor as specified in Section 5-1.18, "Areas for Contractor's Use", of the Special Provision's, is revised from July 1, 2004 to October 1, 2004. The suspension will be in effect through July 6, 2004 and the first chargeable working day will be July 10, 2004.

Due to utility impacts and other delays from adjacent SFOBB contracts (0120G4 and 0120Q4), portions of work on this Contract (0120R4) will be temporarily suspended for approximately 3 months. Areas for Contractor use as specified in the Contract will not be available. These dates are being revised by the change order. If the work is not suspended, Area GR would be the controlling operation and the Department would be responsible for Contractor delays and incur time-related overhead (TRO) and right-of-way delay costs.

This temporary suspension will mutually benefit the State and Contractor, therefore, in accordance with Section 10-1.20, "Time Related Overhead", of the Special Provisions, the lump sum TRO bid item will not be adjusted.

Benefits to the State include:

- Saving R/W delay and TRO costs because the contractual lock out dates for areas on this contract have to be postponed because of current projects (State contract 04-0120G4) won't be completed by the specified dates.
- Saving R/W delay and potential TRO costs because existing utilities have been found that are not shown on the contract plans can be relocated.
- No R/W delay costs as agreed to by the Contractor.

RECEIVED
03707 FEB -1 06

Benefits to the Contractor include:

- Contractor will postpone mobilizing equipment and labor in areas precluded by the change order.

Additionally, both parties will benefit because it provides time to complete enhancement of design criteria for the East Tie-In for Contractor's chosen design. Instead of trying to enhance design criteria for the East Tie-In during construction, the suspension will provide the Contractor time to properly develop and evaluate the design criteria. The Contractor chose a design strategy different than envisioned by the Contract but is within the parameters of the Contract. If this process does not go smoothly there could be significant financial risk due to potentially stopping the work. The Contractor would most likely have tried to pass responsibility to the Department.

If the Contract were to proceed without the suspension, it would potentially result in more money being spent by both parties. The Contractor would likely try to recoup all the additional costs.

49.14

During the temporary suspension, unaffected portions of work can still proceed with the approval of the Engineer.

In accordance with Section 10-1.20 "Time Related Overhead," of the Special Provisions, the lump sum bid item for Time Related Overhead will not be adjusted. The days in which the suspension is in effect will not be considered working days. There will be no compensation including, but not limited to, inefficiencies, right of way delays, escalation of labor, material or equipment costs, all overheads, underutilization of equipment, or any other costs, whatsoever, by reason of this change.

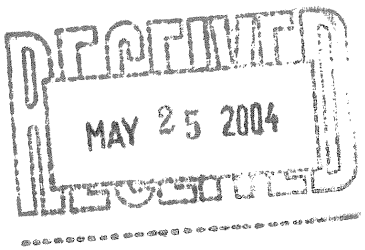

Amer, Bata, SPOBB CONSTRUCTION MANAGER — DATE 5/6/04	
DATE	
DATE	
DATE	
OTHER (Specify) — DATE	
DATE	
DIST PRIOR APPROVAL BY — DATE	
H' 'JE & APPROVE) (TO PROCEED) BY — DATE	
Kenneth Loncharich, RESIDENT ENGINEER — DATE 5-5-04	

ESTIMATE OF COST

	THIS REQUEST	TOTAL TO DATE
ITEMS	$ 0.00	$ 0.00
FORCE ACCOUNT	$ 0.00	$ 0.00
AGREED PRICE	$ 0.00	$ 0.00
ADJUSTMENT	$ 0.00	$ 0.00
TOTAL	$ 0.00	$ 0.00

FEDERAL PARTICIPATION

☐ PARTICIPATING ☐ PARTICIPATING IN PART ☒ NONE
☐ NON-PARTICIPATING (Maintenance) ☐ NON-PARTICIPATING

FEDERAL SEGREGATION(If more than one funding source or P.I.P. type)

☐ CCO FUNDED PER CONTRACT ☐ CCO FUNDED AS FOLLOWS

FEDERAL FUNDING SOURCE	PERCENT

LIFORNIA
NT OF TRANSPORTATION

CONTRACT CHANGE ORDER NO. 15 SUPPL. --

ROAD **SF-80-12.6/13.2** SHEET 1 OF 1 SHEETS

FEDERAL NO.(S) **ACBRIM-080-1(097)N** CONTRACT NO. **04-0120R4**

To **C.C. Myers, Inc.** Contractor

You are hereby directed to make the herein described changes from the plans and specifications or do the following described work not included in the plans and specifications on this contract.

NOTE: This change order is not effective until approved by the Chief Engineer.

Description of work to be done, estimate of quantities, and prices to be paid. Segregate between additional work at contract price, agreed price and force account. Unless otherwise stated, rates for rental equipment cover only such time as equipment is actually used and no allowance will be made for idle time.

This Change is requested by the **ENGINEER.**

The last percentage shown is the net accumulated increase or decrease from the original in the Engineer's Estimate.

EXTRA WORK AT FORCE ACCOUNT:

Provide assistance to Caltrans' Archaeologists as authorized in the field by the Engineer.

Contractor labor, equipment and materials required in assisting the archaeologist will be paid for as extra work as provided for in Section 4-1.03D, "Extra Work", of the Standard Specifications and Section 5-1.24, "Force Account Payment", of the contract Special Provisions.

Estimate Cost.....$30,000.00

Estimated Cost **Decrease** **$ 0.00** **or Increase** **$ 30,000.00**

By reason of this order the time of completion will be adjusted as follows:	**0 DAYS**

Submitted by: Kenneth Loncharich, Resident Engineer Date: 7-7-04

Approval Recommended: Kenneth Loncharich, Resident Engineer Date: 7-7-04

Approved by: Chief Engineer Date: 7/14/04

We, the undersigned contractor, have given careful consideration to the change proposed and hereby agree, if this proposal is approved, that we will provide all equipment, furnish all materials, except as may otherwise be noted above, and perform all services necessary for the work above specified, and will accept as full payment therefor the prices shown above.

Accepted, Date 7/14/04 Contractor **C.C. MYERS, INC.**

By Dewey C. Lee, Jr. Title **DEWEY C. LEE, JR. Contract Administrator**

If the contractor does not sign acceptance of this order, his attention is directed to the requirements of the specifications as to proceeding with the ordered work and filing a written protest within the time therein specified.

HC-5 Word(Rev.6/94)

STATE OF CALIFORNIA - DEPARTMENT OF TRANSPORTATION

CONTRACT CHANGE ORDER MEMORANDUM

DC-CEM-4903(OLD HC-39 REV 6/93) CT#7541-3544-0

DATE: **July 15, 2004**

TO: **Amer Bata, SFOBB Construction Manager**	FILE: E.A. **04-0120R4**
FROM: **Kenneth Loncharich, Resident Engineer**	CO-RTE-PM **SF-80-12.6/13.2**
	FED NO. **ACBRIM-080-1(097)N**
CCO NO. **015** / SUPPLEMENT NO. **--** / CATEGORY CODE: **CDTF**	CONTINGENCY BALANCE (including this change): **$ 4,236,350.00**
$ 30,000.00 **INCREASE**	HEADQUARTERS APPROVAL REQUIRED? YES ☐ NO ☒
SUPPLEMENTAL FUND PROVIDED **$ 0.00**	IS THIS REQUEST IN ACCORDANCE WITH ENVIRONMENTAL DOCUMENTS? YES ☒ NO ☐

THIS CHANGE ORDER PROVIDES FOR:

Providing assistance to Caltrans' Archaeologists as authorized in the field by the Engineer.

This project provides for the construction of a temporary bypass structure in the City and County of San Francisco from Yerba Buena Tunnel to portions of the existing Route 80 viaduct (Bridge No. 34-0004) . This work includes the construction of foundations, substructures, temporary support structures, superstructure, bridge barriers, bridge deck drain systems, and all appurtenant items, which are shown on the contract Layout Plans.

Caltrans policy and State regulations require archaeological investigations to be conducted in association with this project's work in order to ensure potential archaeological resources are properly evaluated. The locations, where this work is required, is designated as Environmentally Sensitive Areas (ESA-1) as shown on the contract Construction Details, Environmental Sensitive Areas. The Contractor is required to provide the necessary labor, equipment and materials to assist the archaeologists in their investigations to clear the area for future construction on the 04-0120P4 contract. Native American remains have been discovered in the area and more are expected to be found.

This work is not covered under the contract items. Therefore, this work will be done under Extra Work at Force Account for an estimated total of **$ 30,000.00**.

Maintenance concurrence is not required for this change as it does not impact the maintenance or serviceability of the structure.

No adjustment of the contract time is warranted, as this change does not affect the controlling operation.

RECEIVED 003799 FEB-1 05

Amer, Bata, SFOBB CONSTRUCTION MANAGER	DATE 7/16/04
Janet Adams, Division Chief – Toll Bridge Region	DATE 5/10/04
	DATE
	DATE
OTHER (Specify)	DATE
	DATE
DISTRICT OR APPROVAL BY	DATE
HQ (ISSUE & APPROVE) (TO PROCEED) BY	DATE
Kenneth Loncharich, RESIDENT ENGINEER	DATE 7.16.04

ESTIMATE OF COST

	THIS REQUEST	TOTAL TO DATE
ITEMS	$ 0.00	$ 0.00
FORCE ACCOUNT	$ 30,000.00	$ 30,000.00
AGREED PRICE	$ 0.00	$ 0.00
ADJUSTMENT	$ 0.00	$ 0.00
TOTAL	$ 30,000.00	$ 30,000.00

FEDERAL PARTICIPATION

☒ PARTICIPATING ☐ PARTICIPATING IN PART ☐ NONE
☐ NON-PARTICIPATING (Maintenance) ☐ NON-PARTICIPATING

FEDERAL SEGREGATION (If more than one funding source or P.I.P. type)

☒ CCO FUNDED PER CONTRACT ☐ CCO FUNDED AS FOLLOWS

FEDERAL FUNDING SOURCE	PERCENT

STATE OF CALIFORNIA - DEPARTMENT OF TRANSPORTATION

CONTRACT CHANGE ORDER

Change Requested by: Engineer

CCO: 15	Suppl. No. 1	Contract No. 04 - 0120R4	Road SF-80-12.6/13.2	FED. AID LOC.: ACBRIM-080-1(097)N

To: **CC MYERS INC**

You are directed to make the following changes from the plans and specifications or do the following described work not included in the plans and specifications for this contract. ***NOTE: This change order is not effective until approved by the Engineer.***

Description of work to be done, estimate of quantities and prices to be paid. (Segregate between additional work at contract price, agreed price and force account.) Unless otherwise stated, rates for rental of equipment cover only such time as equipment is actually used and no allowance will be made for idle time. This last percentage shown is the net accumulated increase or decrease from the original quantity in the Engineer's Estimate.

Extra Work at Force Account:

Provide Additional Funds for assistance to Caltrans' Archaeologists as authorized in the field by the Engineer.

Estimated cost of Extra Work at Force Account $15,000.00

Estimated Cost: **Increase** ☑ **Decrease** ☐ **$15,000.00**

By reason of this order the time of completion will be adjusted as follows: 0 days

Submitted by

Signature	Resident Engineer: LOURDES DAVID	Date
Lourdes David		4/19/05

Approval Recommended by

Signature	Construction Engineer: LOURDES DAVID	Date
Lourdes David		4/19/05

Engineer Approval by

Signature	(Print name and title)	Date
Lourdes David	LOURDES DAVID - Construction Engineer	4/19/05

We the undersigned contractor, have given careful consideration to the change proposed and agree, if this proposal is approved, that we will provide all equipment, furnish the materials, except as may otherwise be noted above, and perform all services necessary for the work above specified, and will accept as full payment therefor the prices shown above.

NOTE: If you, the contractor, do not sign acceptance of this order, your attention is directed to the requirements of the specifications as to proceeding with the ordered work and filing a written protest within the time therein specified.

Contractor Acceptance by

Signature	(Print name and title)	Date
Not required - unilateral		

STATE OF CALIFORNIA - DEPARTMENT OF TRANSPORTATION

CONTRACT CHANGE ORDER MEMORANDUM

DATE: 4/18/2005 Page 1 of 1

TO: AMER BATA / LOURDES DAVID	FILE: **E.A.** 04 - 0120R4
FROM: LOURDES DAVID	**CO-RTE-PM** SF-80-12.6/13.2
CCO#: **15** SUPPLEMENT#: **1** Category Code: **CDTF**	**FED. NO.** ACBRIM-080-1(097)N
COST: **$15,000.00** INCREASE ☑ DECREASE ☐	CONTINGENCY BALANCE (incl. this change): **$1,393,063.79**
SUPPLEMENTAL FUNDS PROVIDED: **$0.00**	HEADQUARTERS APPROVAL REQUIRED? ☐ YES ☑ NO
CCO DESCRIPTION: Add Funds for Archaeology Investigation	IS THIS REQUEST IN ACCORDANCE WITH ENVIRONMENTAL DOCUMENTS? ☑ YES ☐ NO
	PROJECT DESCRIPTION: CONSTRUCT ROUTE 80 TEMP BYPASS STRUCTURE

LOCATION: IN THE CITY AND COUNTY OF SAN FRANCISCO FROM YERBA BUENA TUNNEL TO 0.6 KM EAST OF THE YERBA BUENA TUNNEL

THIS CHANGE ORDER PROVIDES FOR:

Additional Funds.

As noted in the original change order this project provides for the construction of a temporary bypass structure in the City and County of San Francisco from Yerba Buena Tunnel to portions of the existing Route 80 viaduct (Bridge No. 34-0004). This work includes the construction of foundations, substructures, temporary support structures, superstructure, bridge barriers, bridge deck drain systems, and all appurtenant items, which are shown on the contract Layout Plans.

Caltrans policy and State regulations require archaeological investigations to be conducted in association with this project's work in order to ensure potential archaeological resources are properly evaluated. The locations, where this work is required, is designated as Environmentally Sensitive Areas (ESA-1) as shown on the contract Construction Details, Environmental Sensitive Areas. The Contractor is required to provide the necessary labor, equipment and materials to assist the archaeologists in their investigations to clear the area for future construction on the 04-0120P4 Contract. Native American remains have been discovered in the area and more are expected to be found.

This change is necessary because the extent of required archeological investigations has become greater than originally anticipated.

Design and Maintenance concurrence is not required, as this change does not affect the final design.

This work is not covered by Contract Items. Therefore, additional payment for this work will be at Extra Work at Force Account for an estimated cost of $15,000.00, which can be financed from the contingency fund.

The Contractor's signature is not required for additional funds for Extra Work at Force Account change orders. Therefore this change order is being issued unilaterally.

No adjustment of the contract time is warranted, as this change does not affect the controlling operation.

CONCURRED BY:	
Construction Engineer: Lourdes David	Date 4/18/2005
Bridge Engineer:	Date
FHWA Representative:	Date
Project Engineer:	Date
Other (specify):	Date
	Date
	Date
District Prior Approval By:	Date
HQ (Issue Approve) By:	Date
Resident Engineer's Signature:	Date 4/19/05

ESTIMATE OF COST

	THIS REQUEST	TOTAL TO DATE
ITEMS	$0.00	$0.00
FORCE ACCOUNT	$15,000.00	$45,000.00
AGREED PRICE	$0.00	$0.00
ADJUSTMENT	$0.00	$0.00
TOTAL	$15,000.00	$45,000.00

FEDERAL PARTICIPATION

☑ PARTICIPATING ☐ PARTICIPATING IN PART ☐ NONE
☐ NON-PARTICIPATING (MAINTENANCE) ☐ NON-PARTICIPATING

FEDERAL SEGREGATION (if more than one Funding Source or P.I.P. type)
☑ CCO FUNDED PER CONTRACT ☐ CCO FUNDED AS FOLLOWS

FEDERAL FUNDING SOURCE	PERCENT

STATE OF CALIFORNIA - DEPARTMENT OF TRANSPORTATION

CONTRACT CHANGE ORDER

Change Requested by: Engineer

CCO: 17	Suppl. No. 0	Contract No. 04 - 0120R4	Road SF-80-12.6/13.2	FED. AID LOC.: ACBRIM-080-1(097)N

To: **CC MYERS INC**

You are directed to make the following changes from the plans and specifications or do the following described work not included in the plans and specifications for this contract. ***NOTE: This change order is not effective until approved by the Engineer.***

Description of work to be done, estimate of quantities and prices to be paid. (Segregate between additional work at contract price, agreed price and force account.) Unless otherwise stated, rates for rental of equipment cover only such time as equipment is actually used and no allowance will be made for idle time. This last percentage shown is the net accumulated increase or decrease from the original quantity in the Engineer's Estimate.

Adjustment of Compensation at Lump Sum:

As authorized by the Engineer:

(1) Install drainage system to convey the water away from the base of slope at the utility tunnel entry vault. Match top of G1 inlet grate elevation to the proposed FG elevation, which will be 0.750 meter below TG. Additionally, AC Dike Type E or F shall be hand-formed.

(2) Remove the air line running between Vault 2 and Vault 5, and remove the existing abandoned air line running between Vault 3 and Vault 4.

(3) Design the following utility and pipe openings at Abutment 39.

(a) A standard 600 mm wide x 1800 mm high access opening and door through Abutment 39. (Refer to Bridge Details BO-13 of the Standard Plans)

(b) Eight (8) 100 mm conduit penetrations (with a minimum of 230 mm center-to-center offset) through Abutment 39.

(c) One (1) 300mm penetration for the existing 300mm corrugated plastic pipe.

All work designed shall be in accordance with the Steel Door Institute (SDI), the Door and Hardware Institute (DHI), the National Fire Protection Association (NFPA) and all local ordinances.

For this work the contractor will be paid the agreed lump sum of $ 108,217.45. This sum constitutes full compensation including markups, for furnishing all labor, materials, tools, equipment and incidentals for doing all the work involved in this change.

No adjustment in contract time will be made since this work is not a controlling operation.

All work shall be performed in accordance with the Contract Special Provisions and Standard Specifications.

Total cost of Adjustment of Compensation at Lump Sum $108,217.45

CONTRACT CHANGE ORDER

Change Requested by: Engineer

CCO: 17	Suppl. No. 0	Contract No. 04 - 0120R4	Road SF-80-12.6/13.2	FED. AID LOC.: ACBRIM-080-1(097)N

Estimated Cost: Increase ☑ Decrease ☐ $108,217.45

By reason of this order the time of completion will be adjusted as follows: 0 days

Submitted by

Signature	Resident Engineer: MAHANTESH ANIGOL	Date 9/19/06

Approval Recommended by

Signature	Construction Engineer: MAHANTESH ANIGOL	Date 9/19/06

Engineer Approval by

Signature	(Print name and title) JASON TOM - Chief	Date 10/20/06

We the undersigned contractor, have given careful consideration to the change proposed and agree, if this proposal is approved, that we will provide all equipment, furnish the materials, except as may otherwise be noted above, and perform all services necessary for the work above specified, and will accept as full payment therefor the prices shown above.

NOTE: If you, the contractor, do not sign acceptance of this order, your attention is directed to the requirements of the specifications as to proceeding with the ordered work and filing a written protest within the time therein specified.

Contractor Acceptance by

Signature	(Print name and title) DANIEL E. HUMICK, PRESIDENT	Date 10/03/06

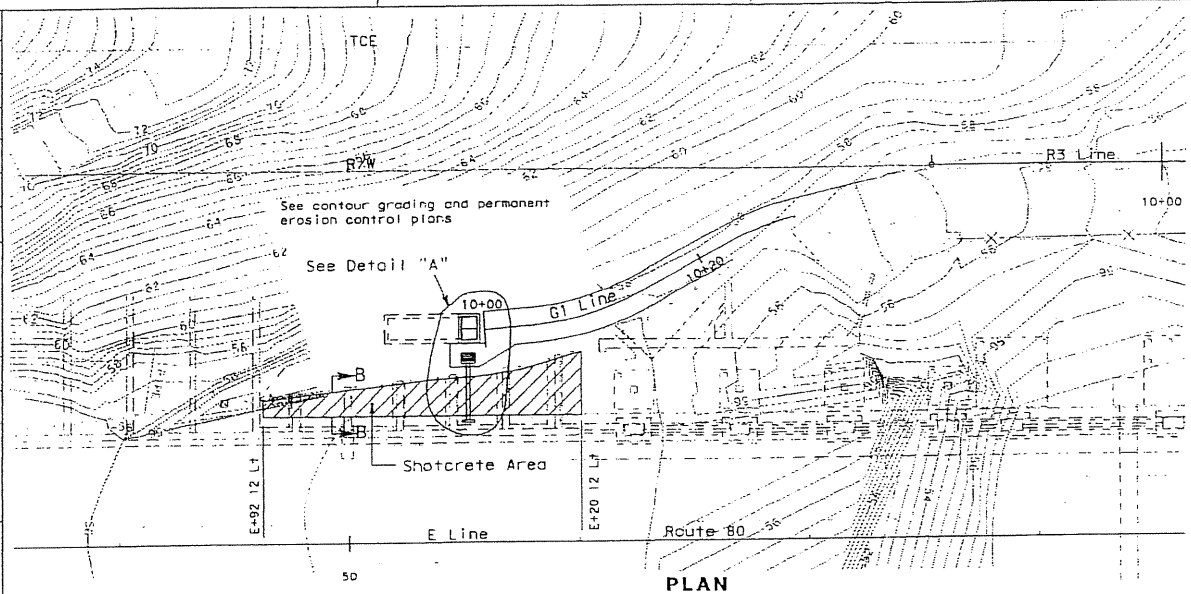

PLAN
SCALE: 1:200

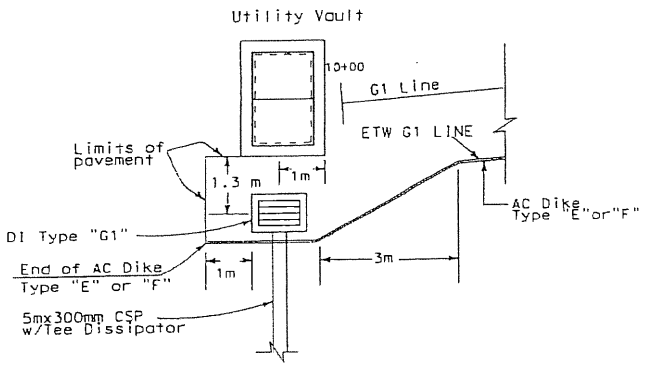

DETAIL "A"
N.T.S.

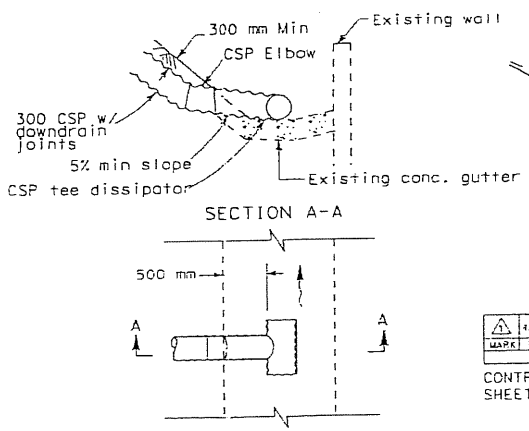

PLAN

CORRUGATED STEEL PIPE w/ TEE DISSIPATOR
N.T.S.

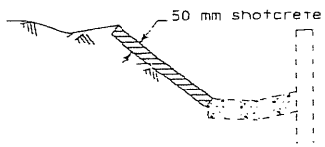

SECTION B-B

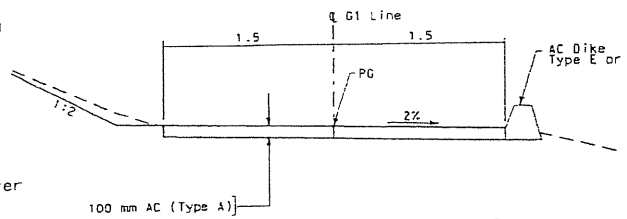

AC Dike Type E or F
STA 10+02± * TO 10+22±
* See Detail "A"
N.T.S.

NOTE:

1. For Details not shown, see Standard Plans STD. A87B & D73.

MARK	DATE	DESCRIPTIONS	IP	JC
1	4/20/05	New Drawing		
		REVISIONS	RE'd	CK

CONTRACT CHANGE ORDER NO. 17
SHEET 3 OF 3

ALL DIMENSIONS ARE IN METERS UNLESS OTHERWISE SHOWN

DRAINAGE PLAN
SCALE: AS NOTED

D-

DIST	COUNTY	ROUTE	KILOMETER POST TOTAL PROJECT	SHEET No	TOTAL SHEETS
04	SF	80	12.7		

4/20/05 DATE
REGISTERED CIVIL ENGINEER
4-25-05
PLANS APPROVAL DATE
PARSONS BRINCKERHOFF QUADE & DOUGLAS, INC.
303 Second St., Suite 700N
San Francisco, CA 94107-1317

The State of California or its officers or agents shall not be responsible for the accuracy or completeness of electronic copies of this plan sheet.

Caltrans now has a web site! To get to the web site, go to http://www.dot.ca.gov/

Caltrans Metric

Isaac Perez
No. C 53542
Exp. 06/30/07
CIVIL
STATE OF CALIFORNIA

STATE OF CALIFORNIA - DEPARTMENT OF TRANSPORTATION
Caltrans

DESIGN OVERSIGHT: Kevin Azarmi
CALCULATED/DESIGNED BY: IP
CHECKED BY: JC
DATE REVISED: 4/05
REVISED BY:

LAST REVISION 00-00-00 DATE PLOTTED => 00/00/00 TIME PLOTTED => 12:00

FOR REDUCED PLANS ORIGINAL SCALE IS IN MILLIMETERS 0 20 40 60 80
DGN FILE => sfdet01st
USERNAME => kaser

CU 04251 EA 0120R4

STATE OF CALIFORNIA
DEPARTMENT OF TRANSPORTATION

CONTRACT CHANGE ORDER NO. 18 **SUPPL. --**

ROAD **SF-80-12.6/13.2** SHEET **1** OF **1** SHEETS

FEDERAL NO.(S) **ACBRIM-080-1(097)N** CONTRACT NO. **04-0120R4**

To **C.C. Myers, Inc.** Contractor

You are hereby directed to make the herein described changes from the plans and specifications or do the following described work not included in the plans and specifications on this contract.

NOTE: This change order is not effective until approved by the Chief Engineer.

Description of work to be done, estimate of quantities, and prices to be paid. Segregate between additional work at contract price, agreed price and force account. Unless otherwise stated, rates for rental equipment cover only such time as equipment is actually used and no allowance will be made for idle time.

This Change is requested by the **ENGINEER.**

The last percentage shown is the net accumulated increase or decrease from the original in the Engineer's Estimate.

EXTRA WORK AT FORCE ACCOUNT:

Provide access control measures as provided for in Section 5-1.28, Photo Identification System, of the contract Special Provisions, and as authorized by the Engineer.

Access control measures will be paid for as extra work as provided for in Section 5-1.24 "Force Account Payment" of the Special Provisions, and Section 4-1.03D "Extra Work" of the Standard Specifications.

Estimate of Extra Work at Force Account = $ 50,000.00

Estimated Cost **Decrease** **$ 0.00** **or Increase** **$ 50,000.00**

By reason of this order the time of completion will be adjusted as follows:	**0 DAYS**

Submitted by: _____ Date: 7/29/04
Kenneth Loncharich, Resident Engineer

Approval Recommended: _____ Date: 7/29/04
Kenneth Loncharich, Resident Engineer

Approved by: Chief Engineer _____ Date: 9/2/04

We, the undersigned contractor, have given careful consideration to the change proposed and hereby agree, if this proposal is approved, that we will provide all equipment, furnish all materials, except as may otherwise be noted above, and perform all services necessary for the work above specified, and will accept as full payment therefor the prices shown above.

Accepted, Date 8/11/04 Contractor **C.C. MYERS, INC.**

By _____ Title **DEWEY C. LEE, JR. Contract Administrator**

If the contractor does not sign acceptance of this order, his attention is directed to the requirements of the specifications as to proceeding with the ordered work and filing a written protest within the time therein specified.

HC-5 Word(Rev.6/94)

STATE OF CALIFORNIA - DEPARTMENT OF TRANSPORTATION

CONTRACT CHANGE ORDER

Change Requested by: Engineer

CCO: 19	Suppl. No. 0	Contract No. 04 - 0120R4	Road SF-80-12.6/13.2	FED. AID LOC.: ACBRIM-080-1(097)N

To: CC MYERS INC

You are directed to make the following changes from the plans and specifications or do the following described work not included in the plans and specifications for this contract. ***NOTE: This change order is not effective until approved by the Engineer.***

Description of work to be done, estimate of quantities and prices to be paid. (Segregate between additional work at contract price, agreed price and force account.) Unless otherwise stated, rates for rental of equipment cover only such time as equipment is actually used and no allowance will be made for idle time. This last percentage shown is the net accumulated increase or decrease from the original quantity in the Engineer's Estimate.

Adjustment of Compensation at Lump Sum:

Modify the EDR 1 Line alignment as shown on Sheets 2 and 3 of this contract change order.

For this work the contractor will be paid the lump sum of $0.00. This sum constitutes full compensation, including markups, for this change.

Total cost of Adjustment of Compensation at Lump Sum Price $0.00

Estimated Cost: **Increase** ☐ **Decrease** ☐ **$0.00**

By reason of this order the time of completion will be adjusted as follows: 0 days

Submitted by

Signature	Resident Engineer: LOURDES DAVID	Date 5/16/25

Approval Recommended by

Signature	Construction Engineer: LOURDES DAVID	Date 5/16/25

Engineer Approval by

Signature	(Print name and title) LOURDES DAVID - Construction Engineer	Date 5/16/25

We the undersigned contractor, have given careful consideration to the change proposed and agree, if this proposal is approved, that we will provide all equipment, furnish the materials, except as may otherwise be noted above, and perform all services necessary for the work above specified, and will accept as full payment therefor the prices shown above.

NOTE: If you, the contractor, do not sign acceptance of this order, your attention is directed to the requirements of the specifications as to proceeding with the ordered work and filing a written protest within the time therein specified.

Contractor Acceptance by

Signature	(Print name and title)	Date
Unilateral		

STATE OF CALIFORNIA - DEPARTMENT OF TRANSPORTATION

CONTRACT CHANGE ORDER MEMORANDUM

DATE: 5/9/2005

TO: AMER BATA / LOURDES DAVID	FILE: **E.A.** 04 - 0120R4
FROM: LOURDES DAVID	**CO-RTE-PM** SF-80-12.6/13.2
	FED. NO. ACBRIM-080-1(097)N
CCO#: **19** SUPPLEMENT#: **0** Category Code: **CHPJ**	CONTINGENCY BALANCE (incl. this change): **$3,634,193.49**
COST: **$0.00** INCREASE ☐ DECREASE ☐	HEADQUARTERS APPROVAL REQUIRED? ☐ YES ☑ NO
SUPPLEMENTAL FUNDS PROVIDED: **$0.00**	IS THIS REQUEST IN ACCORDANCE WITH ENVIRONMENTAL DOCUMENTS? ☑ YES ☐ NO
CCO DESCRIPTION: EDR 1 Alignment Modification	**PROJECT DESCRIPTION:** CONSTRUCT ROUTE 80 TEMP BYPASS STRUCTURE

LOCATION: IN THE CITY AND COUNTY OF SAN FRANCISCO FROM YERBA BUENA TUNNEL TO 0.6 KM EAST OF THE YERBA BUENA TUNNEL

THIS CHANGE ORDER PROVIDES FOR:
an alignment modification to the EDR 1 Line.

This project provides for the construction of a temporary bypass structure in the City and County of San Francisco from Yerba Buena Tunnel to portions of the existing Route 80 viaduct (Bridge No. 34-0004). This work includes the construction of foundations, substructures, temporary support structures, superstructure, bridge barriers, bridge deck drain systems, and all appurtenant items, which are shown on the contract Layout Plans.

The alignment data, profile data and curve data originally designed by Parson Brinckerhoff Quade & Douglas does not properly tie into the EDR 1 alignment. Trinh Lai, Design Engineer - Toll Bridge Design, requested a contract change order to modify the EDR 1 alignment on July 09, 2004 and November 23, 2004. A revised Project Plan Sheet L-4 dated and stamped July 09, 2004 was provided with the July 9th request for change order. A revised Project Plan Sheet P-6 dated and stamped November 23, 2004 was provided with the November 23rd request for change order. Revised Project Plan Sheet L-4 modifies EDR 1 Line alignment and curve data. Revised Project Plan Sheet P-6 modifies EDR 1 Line profile data.

On 4/13/05 Amer Bata, Area Construction Manager - SFOBB, and Lourdes David, Construction Engineer, granted District Prior Approval of this change order. Maintenance concurrence is not required, as this work does not affect the final design.

Payment for the work of this change order will be at Adjustment of Compensation at a Lump Sum of $0.00. This price is found to be fair and reasonable because the work of this change order has not begun and the change affects only the alignment. Quantities, equipment and manpower are not affected.

On 3/2/05 the Contractor returned this change order unsigned and stated that their design subcontractor, Imbsen & Associates, Inc, believed additional design costs would be incurred. On 4/8/05 the State sent a letter to the Contractor requesting that the Contractor provide a description and cost breakdown of these supposed costs. The State also stated that if no additional cost information was provided by 4/22/05, that this change order would be issued unilaterally. No cost information was received from the Contractor by 4/22/05. The Contractor was verbally reminded that this change order would now be issued unilaterally and the Contractor verbally stated that they had no issue with this change order being issued unilaterally. Therefore this change order is being issued unilaterally.

No adjustment of contract time is warranted by this change, as it does not affect the controlling operation.

CONCURRED BY:		
Construction Engineer:	Lourdes David	Date 2/20/2004
Bridge Engineer:		Date
FHWA Representative:		Date
Project Engineer:	Trinh Lai	Date 1/23/2004
Other (specify):		Date
		Date
		Date
District Prior Approval By:	Amer Bata, Area Construction Man	Date 4/13/2005
HQ (Issue Approve) By:		Date
Resident Engineer's Signature:		Date 5/10/05

ESTIMATE OF COST

	THIS REQUEST	TOTAL TO DATE
ITEMS	$0.00	$0.00
FORCE ACCOUNT	$0.00	$0.00
AGREED PRICE	$0.00	$0.00
ADJUSTMENT	$0.00	$0.00
TOTAL	$0.00	$0.00

FEDERAL PARTICIPATION

☑ PARTICIPATING ☐ PARTICIPATING IN PART ☐ NONE
☐ NON-PARTICIPATING (MAINTENANCE) ☐ NON-PARTICIPATING

FEDERAL SEGREGATION (if more than one Funding Source or P.I.P. type)
☑ CCO FUNDED PER CONTRACT ☐ CCO FUNDED AS FOLLOWS

FEDERAL FUNDING SOURCE	PERCENT

CONTRACT CHANGE ORDER

Change Requested by: Engineer

CCO: 20	Suppl. No. 0	Contract No. 04 - 0120R4	Road SF-80-12.6/13.2	FED. AID LOC.: ACBRIM-080-1(097)N

To: **CC MYERS INC**

You are directed to make the following changes from the plans and specifications or do the following described work not included in the plans and specifications for this contract. ***NOTE: This change order is not effective until approved by the Engineer.***

Description of work to be done, estimate of quantities and prices to be paid. (Segregate between additional work at contract price, agreed price and force account.) Unless otherwise stated, rates for rental of equipment cover only such time as equipment is actually used and no allowance will be made for idle time. This last percentage shown is the net accumulated increase or decrease from the original quantity in the Engineer's Estimate.

Adjustment of Compensation at Lump Sum:

Modify requirement stated in Design Criteria 3.3.2 shown on Sheet 97 of 193 of the Contract Plans, which requires Fasteners to be ASTM A325 high strength bolts, to allow for substitution of A325 bolts with A490 bolts. Exposed surfaces of A490 bolts shall be protected from corrosion by coating any exposed surfaces with an approved corrosion prevention system (prior to final application of an approved paint) or an approved paint system that is compatible with the steel forming the connection. The condition of the A490 bolts shall be maintained to meet the as-manufactured condition until they are incorporated into the work.

The exposed surfaces shall be cleaned and painted in conformance with the provisions in Sections 59-2, "Painting Structural Steel", and 91, "Paint", of the Standard Specifications; and Sections 59, "Painting", and 10-1.55, "South Edge Girder Support - Clean and Paint Structural Steel", of the Special Provisions; as well as Section 3.3.6 of the Design Criteria shown on the Contract Plans.

The Contractor requested this Contract Change Order. For this work, the contractor will be paid the agreed lump sum of $ 0.00. This sum constitutes full compensation, including markups, for this change. Any additional work or related costs, either direct or indirect, as a result of this contract change order will be borne entirely by the Contractor.

Total cost of Adjustment of Compensation at Agreed Lump Sum $0.00

Estimated Cost: **Increase** ☐ **Decrease** ☐ **$0.00**

By reason of this order the time of completion will be adjusted as follows: 0 days

Submitted by

Signature	Resident Engineer: LOURDES DAVID	Date 12/16/05

Approval Recommended by

Signature	Construction Engineer: LOURDES DAVID	Date 12/16/05

Engineer Approval by

Signature	(Print name and title) ~~AMER-BATA~~ Chief Jason Tom - Chief	Date 10/19/06

We the undersigned contractor, have given careful consideration to the change proposed and agree, if this proposal is approved, that we will provide all equipment, furnish the materials, except as may otherwise be noted above, and perform all services necessary for the work above specified, and will accept as full payment therefor the prices shown above.

NOTE: If you, the contractor, do not sign acceptance of this order, your attention is directed to the requirements of the specifications as to proceeding with the ordered work and filing a written protest within the time therein specified.

Contractor Acceptance by

Signature	(Print name and title) DEWEY C. LEE JR. Contract Manager	Date 10/11/06

STATE OF CALIFORNIA - DEPARTMENT OF TRANSPORTATION

CONTRACT CHANGE ORDER MEMORANDUM

DATE: 8/2/2005 Page 1 of 1

TO: AMER BATA / LOURDES DAVID	FILE: **E.A.** 04 - 0120R4
FROM: LOURDES DAVID	**CO-RTE-PM** SF-80-12.6/13.2
	FED. NO. ACBRIM-080-1(097)N
CCO#: **20** SUPPLEMENT#: **0** Category Code: **CHSX**	CONTINGENCY BALANCE (incl. this change) **$1,283,063.79**
COST: **$0.00** INCREASE ☐ DECREASE ☐	HEADQUARTERS APPROVAL REQUIRED? ☑ YES ☐ NO
SUPPLEMENTAL FUNDS PROVIDED: **$0.00**	IS THIS REQUEST IN ACCORDANCE WITH ENVIRONMENTAL DOCUMENTS? ☑ YES ☐ NO
CCO DESCRIPTION: A490 Bolts	**PROJECT DESCRIPTION:** CONSTRUCT ROUTE 80 TEMP BYPASS STRUCTURE

LOCATION: IN THE CITY AND COUNTY OF SAN FRANCISCO FROM YERBA BUENA TUNNEL TO 0.6 KM EAST OF THE YERBA BUENA TUNNEL

THIS CHANGE ORDER PROVIDES FOR:

modification of requirement stated in Design Criteria 3.3.2 shown on Sheet 97 of 193 of the Contract Plans, which requires Fasteners to be ASTM A325 high strength bolts, to allow for substitution of A325 bolts with A490 bolts. The Contractor requested this Contract Change Order.

The Contractor's design for the Structural Steel calls for the use of A490 Bolts in lieu of the A235 Bolts that are specified in the Contract Plans. Their design uses A490 Bolts because the structural properties of A490 Bolts allow for the use of less bolts, which equates to smaller plate sizes which then reduces the structure's seismic loading. Additionally, less bolts allow for the structure's construction to be expedited and completed within the Contractor's original schedule. The Contractor's Designer, Imbsen and Associates, Inc. (IAI) determined that as long as all exposed surfaces of the A490 bolts are protected from corrosion by hand painting with a corrosion prevention system, that this substitution is acceptable.

The State Design Engineer has reviewed the IAI determination and concurs with the substitution.

Payment for the Adjustment of Compensation will be an Agreed Lump Sum of $0.00, which can be financed from the contingency fund. This price is found to be fair and reasonable because the cost of the added work of hand-applying corrosion protection to the exposed surfaces of these A490 Bolts is offset by savings in material costs. A detailed cost analysis is on file.

Amer Bata, Area Construction Manager - San Francisco Oakland Bay Bridge, Trinh Lai - Project Engineer, Robert Kobal - Caltrans' Headquarters Assistant Construction Coordinator, and Dan T. Adams - Senior Bridge Engineer (OSD), concur with this change. On 12/13/05 Nancy Bobb, FHWA Rep, granted FHWA Prior Approval of this change order.

No adjustment of contract time is warranted by this change, as it does not affect the controlling operation.

CONCURRED BY:

Construction Engineer:	Lourdes David	Date 8/1/2005
Bridge Engineer:	Gary Lai	Date 8/1/2005
FHWA Representative:	Nancy Bobb	Date2/13/2005
Project Engineer:	Trinh Lai, Project Engineer	Date 8/5/2005
Other (specify):	Amer Bata, Area Construction Manager - SFOBB	Date 8/5/2005
	Robert Kobal, HQs Assist Construction Coordinator	Date12/6/2005
	Dan T. Adams - Bridge Engineer OSD	Date1/15/2005
District Prior Approval By:		Date
HQ (Issue Approve) By:	Ken Darby	Date2/16/2005
Resident Engineer's Signature:		Date 12/15/05

ESTIMATE OF COST

	THIS REQUEST	TOTAL TO DATE
ITEMS	$0.00	$0.00
FORCE ACCOUNT	$0.00	$0.00
AGREED PRICE	$0.00	$0.00
ADJUSTMENT	$0.00	$0.00
TOTAL	$0.00	$0.00

FEDERAL PARTICIPATION

☑ PARTICIPATING ☐ PARTICIPATING IN PART ☐ NONE
☐ NON-PARTICIPATING (MAINTENANCE) ☐ NON-PARTICIPATING

FEDERAL SEGREGATION (if more than one Funding Source or P.I.P. type)
☑ CCO FUNDED PER CONTRACT ☐ CCO FUNDED AS FOLLOWS

FEDERAL FUNDING SOURCE	PERCENT

STATE OF CALIFORNIA - DEPARTMENT OF TRANSPORTATION

CONTRACT CHANGE ORDER

Change Requested by: Engineer

CCO: 21	Suppl. No. 0	Contract No. 04 - 0120R4	Road SF-80-12.6/13.2	FED. AID LOC.: ACBRIM-080-1(097)N

To: **CC MYERS INC**

You are directed to make the following changes from the plans and specifications or do the following described work not included in the plans and specifications for this contract. ***NOTE: This change order is not effective until approved by the Engineer.***

Description of work to be done, estimate of quantities and prices to be paid. (Segregate between additional work at contract price, agreed price and force account.) Unless otherwise stated, rates for rental of equipment cover only such time as equipment is actually used and no allowance will be made for idle time. This last percentage shown is the net accumulated increase or decrease from the original quantity in the Engineer's Estimate.

Adjustment of Compensation at Lump Sum:

Provide compensation for removal and disposal of the stairway between the upper and lower portions of Macalla Road and removal and disposal of the electrical debris in this same area.

For this work the contractor will be paid the agreed lump sum of $14,060.00. This sum constitutes full compensation, including markups, for this change.

Estimated cost of Adjustment of Compensation at Agreed Lump Sum $14,060.00

Estimated Cost: **Increase** ☑ **Decrease** ☐ **$14,060.00**

By reason of this order the time of completion will be adjusted as follows: 0 days

Submitted by

Signature	Resident Engineer: LOURDES DAVID	Date 2/25/05

Approval Recommended by

Signature	Construction Engineer: LOURDES DAVID	Date 2/25/05

Engineer Approval by

Signature	(Print name and title) LOURDES DAVID - Construction Engineer	Date 4/6/05

We the undersigned contractor, have given careful consideration to the change proposed and agree, if this proposal is approved, that we will provide all equipment, furnish the materials, except as may otherwise be noted above, and perform all services necessary for the work above specified, and will accept as full payment therefor the prices shown above.

NOTE: If you, the contractor, do not sign acceptance of this order, your attention is directed to the requirements of the specifications as to proceeding with the ordered work and filing a written protest within the time therein specified.

Contractor Acceptance by

Signature	(Print name and title) DEWEY C. LEE, JR. Contract Administrator	Date 3/23/05

STATE OF CALIFORNIA - DEPARTMENT OF TRANSPORTATION

CONTRACT CHANGE ORDER MEMORANDUM

DATE: 2/24/2005 Page 1 of 1

TO: AMER BATA / LOURDES DAVID	FILE: **E.A.** 04 - 0120R4
FROM: LOURDES DAVID	**CO-RTE-PM** SF-80-12.6/13.2
CCO#: **21** SUPPLEMENT#: **0** Category Code: **CXPA**	**FED. NO.** ACBRIM-080-1(097)N
COST: **$14,060.00** INCREASE ☑ DECREASE ☐	CONTINGENCY BALANCE (incl. this change): **$1,439,620.59**
SUPPLEMENTAL FUNDS PROVIDED: **$0.00**	HEADQUARTERS APPROVAL REQUIRED? ☐ YES ☑ NO
CCO DESCRIPTION: Removal and disposal of stairway	IS THIS REQUEST IN ACCORDANCE WITH ENVIRONMENTAL DOCUMENTS? ☑ YES ☐ NO
	PROJECT DESCRIPTION: CONSTRUCT ROUTE 80 TEMP BYPASS STRUCTURE

LOCATION: IN THE CITY AND COUNTY OF SAN FRANCISCO FROM YERBA BUENA TUNNEL TO 0.6 KM EAST OF THE YERBA BUENA TUNNEL

THIS CHANGE ORDER PROVIDES FOR:

compensation for removal and disposal of the stairway between the upper and lower portions of Macalla Road and removal and disposal of the electrical debris in this same area.

Though the removal of the stairway between the upper and lower portions of Macalla Road and removal and disposal of the electrical debris in this same area is shown on the contract plans, no payment was provided in the contract for this work. This change order provides the compensation for this work.

Design and Maintenance concurrence is not required, as this change order does not change the design details.

Payment for the work of this change order will be at Adjustment of Compensation at an Agreed Lump Sum of $14,060.00. This price is found to be fair and reasonable based on a force account analysis submitted by the Contractor and verified by the Engineer. This analysis is on file.

No adjustment of contract time is warranted by this change, as it does not affect the controlling operation.

CONCURRED BY:	
Construction Engineer: Lourdes David LR.	Date 12/4/2004
Bridge Engineer:	Date
FHWA Representative:	Date
Project Engineer:	Date
Other (specify):	Date
	Date
	Date
District Prior Approval By:	Date
HQ (Issue Approve) By:	Date
Resident Engineer's Signature:	Date 2/25/05

ESTIMATE OF COST

	THIS REQUEST	TOTAL TO DATE
ITEMS	$0.00	$0.00
FORCE ACCOUNT	$0.00	$0.00
AGREED PRICE	$0.00	$0.00
ADJUSTMENT	$14,060.00	$14,060.00
TOTAL	$14,060.00	$14,060.00

FEDERAL PARTICIPATION

☑ PARTICIPATING ☐ PARTICIPATING IN PART ☐ NONE
☐ NON-PARTICIPATING (MAINTENANCE) ☐ NON-PARTICIPATING

FEDERAL SEGREGATION (if more than one Funding Source or P.I.P. type)
☑ CCO FUNDED PER CONTRACT ☐ CCO FUNDED AS FOLLOWS

FEDERAL FUNDING SOURCE	PERCENT

CONTRACT CHANGE ORDER

Change Requested by: Engineer

CCO: 22	Suppl. No. 0	Contract No. 04 - 0120R4	Road SF-80-12.6/13.2	FED. AID LOC.: ACBRIM-080-1(097)N

To: **CC MYERS INC**

You are directed to make the following changes from the plans and specifications or do the following described work not included in the plans and specifications for this contract. ***NOTE: This change order is not effective until approved by the Engineer.***

Description of work to be done, estimate of quantities and prices to be paid. (Segregate between additional work at contract price, agreed price and force account.) Unless otherwise stated, rates for rental of equipment cover only such time as equipment is actually used and no allowance will be made for idle time. This last percentage shown is the net accumulated increase or decrease from the original quantity in the Engineer's Estimate.

Extra Work at Force Account:

In accordance with sheets 2 through 7 of this change order and as determined by the Engineer:

(1) Clean vegetation and debris from the existing stairs and walkways leading from the intersection of Southgate Rd. and McCalla Rd. down to the Contractor's jobsite trailer.

(2) Install temporary lighting and a small section of fencing.

(3) Provide minor grading in order to create a small walk path adjacent to Macalla Rd., just off the edge of traveled way (ETW) leading from the bottom of the stairs to the entrance of the U S Coast Guard canopy.

Estimated cost of Extra Work at Force Account $35,000.00

Estimated Cost: **Increase** ☑ **Decrease** ☐ **$35,000.00**

By reason of this order the time of completion will be adjusted as follows: 0 days

Submitted by

Signature	Resident Engineer: LOURDES DAVID	Date 2/10/05

Approval Recommended by

Signature	Construction Engineer: LOURDES DAVID	Date 2/10/05

Engineer Approval by

Signature	(Print name and title) LOURDES DAVID - Construction Engineer	Date 5/13/05

We the undersigned contractor, have given careful consideration to the change proposed and agree, if this proposal is approved, that we will provide all equipment, furnish the materials, except as may otherwise be noted above, and perform all services necessary for the work above specified, and will accept as full payment therefor the prices shown above.

NOTE: If you, the contractor, do not sign acceptance of this order, your attention is directed to the requirements of the specifications as to proceeding with the ordered work and filing a written protest within the time therein specified.

Contractor Acceptance by

Signature	(Print name and title) DEWEY C. LEE, JR. Contract Administrator	Date 5/3/05

STATE OF CALIFORNIA - DEPARTMENT OF TRANSPORTATION

CONTRACT CHANGE ORDER MEMORANDUM

DATE: 4/18/2005 Page 1 of 1

TO: AMER BATA / LOURDES DAVID	FILE: **E.A.** 04 - 0120R4
FROM: LOURDES DAVID	**CO-RTE-PM** SF-80-12.6/13.2
	FED. NO. ACBRIM-080-1(097)N
CCO#: **22** SUPPLEMENT#: **0** Category Code: **CXTX**	CONTINGENCY BALANCE (incl. this change): **$3,634,193.49**
COST: **$35,000.00** INCREASE ☑ DECREASE ☐	HEADQUARTERS APPROVAL REQUIRED? ☐ YES ☑ NO
SUPPLEMENTAL FUNDS PROVIDED: **$0.00**	IS THIS REQUEST IN ACCORDANCE WITH ENVIRONMENTAL DOCUMENTS? ☑ YES ☐ NO
CCO DESCRIPTION: Clean existing stairways and walkways	**PROJECT DESCRIPTION:** CONSTRUCT ROUTE 80 TEMP BYPASS STRUCTURE

LOCATION: IN THE CITY AND COUNTY OF SAN FRANCISCO FROM YERBA BUENA TUNNEL TO 0.6 KM EAST OF THE YERBA BUENA TUNNEL

THIS CHANGE ORDER PROVIDES FOR:

In accordance with sheets 2 through 7 of the change order and as determined by the Engineer:
(1) Cleaning vegetation and debris from the existing stairs and walkways leading from the intersection of Southgate Rd. and McCalla Rd. down to the Contractor's jobsite trailer.
(2) Installing temporary lighting and a small section of fencing.
(3) Providing minor grading in order to create a small walk path adjacent to Macalla Rd., just off the edge of traveled way (ETW) leading from the bottom of the stairs to the entrance of the U S Coast Guard canopy.

The Contractor is currently being compensated for providing a temporary shuttle van service for transporting the general public and passengers on Yerba Buena Island (YBI) to reduce the number of personal vehicles and to facilitate the construction of the bridge. Cleaning the existing stairs and walkways will reduce the amount of shuttle service required, as passengers intending to use the shuttle can then use the stairs to access the shuttle - rather than being shuttled the entire distance that they are now being shuttled.

Trinh Lai, Project Engineer, Mark Shindler, Right of Way Chief, and Greg Ressio, Coast Guard Representative, concur with this work. On 4/13/05 Amer Bata, Area Construction Manager - SFOBB, and Lourdes David, Construction Engineer, granted District Prior Approval of this change order. Design and Maintenance concurrence is not required as this work is temporary.

This work is not covered by any contract items. Therefore, payment for this work will be at Extra Work at Force Account for an estimated cost of $35,000.00, which can be financed from the contingency fund.

No adjustment of the contract time is warranted, as this change does not affect the controlling operation.

CONCURRED BY:	
Construction Engineer: Lourdes David	Date 12/3/2004
Bridge Engineer:	Date
FHWA Representative:	Date
Project Engineer: Trinh Lai	Date 1/25/2005
Other (specify): Mark Shindler, CT Right of Way Chief	Date 12/3/2004
	Date
	Date
District Prior Approval By: Amer Bata, Area Construction Man	Date 4/13/2005
HQ (Issue Approve) By:	Date
Resident Engineer's Signature:	Date 4/19/05

ESTIMATE OF COST

	THIS REQUEST	TOTAL TO DATE
ITEMS	$0.00	$0.00
FORCE ACCOUNT	$35,000.00	$35,000.00
AGREED PRICE	$0.00	$0.00
ADJUSTMENT	$0.00	$0.00
TOTAL	$35,000.00	$35,000.00

FEDERAL PARTICIPATION

☑ PARTICIPATING ☐ PARTICIPATING IN PART ☐ NONE
☐ NON-PARTICIPATING (MAINTENANCE) ☐ NON-PARTICIPATING

FEDERAL SEGREGATION (if more than one Funding Source or P.I.P. type)
☑ CCO FUNDED PER CONTRACT ☐ CCO FUNDED AS FOLLOWS

FEDERAL FUNDING SOURCE PERCENT

STATE OF CALIFORNIA - DEPARTMENT OF TRANSPORTATION

CONTRACT CHANGE ORDER

Change Requested by: Engineer

CCO: 22	Suppl. No. 2	Contract No. 04 - 0120R4	Road SF-80-12.6/13.2	FED. AID LOC.:

To: CC MYERS INC

You are directed to make the following changes from the plans and specifications or do the following described work not included in the plans and specifications for this contract. ***NOTE: This change order is not effective until approved by the Engineer.***

Description of work to be done, estimate of quantities and prices to be paid. (Segregate between additional work at contract price, agreed price and force account.) Unless otherwise stated, rates for rental of equipment cover only such time as equipment is actually used and no allowance will be made for idle time. This last percentage shown is the net accumulated increase or decrease from the original quantity in the Engineer's Estimate.

Extra Work at Force Account:

Provide additional funds for the work specified under the original Change Order No. 22.

Estimated cost of Extra Work at Force Account $60,000.00

Estimated Cost: Increase ☑ Decrease ☐ **$60,000.00**

By reason of this order the time of completion will be adjusted as follows: 0 days

Submitted by

Signature	Resident Engineer JEANNIE BALDERRAMOS	Date 6/16/10

Approval Recommended by

Signature Deanna Vilcheck	Area Construction Manager DEANNA VILCHECK	Date 6/17/10

Engineer Approval by

Signature Deanna Vilcheck	Area Construction Manager DEANNA VILCHECK	Date 6/17/10

We the undersigned contractor, have given careful consideration to the change proposed and agree, if this proposal is approved, that we will provide all equipment, furnish the materials, except as may otherwise be noted above, and perform all services necessary for the work above specified, and will accept as full payment therefor the prices shown above.

NOTE: If you, the contractor, do not sign acceptance of this order, your attention is directed to the requirements of the specifications as to proceeding with the ordered work and filing a written protest within the time therein specified.

Contractor Acceptance by

Signature NOT REQUIRED	(Print name and title)	Date

CONTRACT CHANGE ORDER

Change Requested by: Engineer

CCO: 24	Suppl. No. 0	Contract No. 04 - 0120R4	Road SF-80-12.6/13.2	FED. AID LOC.: ACBRIM-080-1(097)N

To: **CC MYERS INC**

You are directed to make the following changes from the plans and specifications or do the following described work not included in the plans and specifications for this contract. ***NOTE: This change order is not effective until approved by the Engineer.***

Description of work to be done, estimate of quantities and prices to be paid. (Segregate between additional work at contract price, agreed price and force account.) Unless otherwise stated, rates for rental of equipment cover only such time as equipment is actually used and no allowance will be made for idle time. This last percentage shown is the net accumulated increase or decrease from the original quantity in the Engineer's Estimate.

Adjustment of Compensation at Unit Price:

In accordance with Section 8-1.05, "Temporary Suspension of Work", of the Standard Specifications, portions of the contract are temporarily suspended, effective September 3, 2004. The State and the Contractor mutually agree that all construction operations involving the Temporary Bypass Structure, shall be suspended. Additionally, k-rail placement, roadway restriping, and other traffic control operations shall be suspended. Other work shall proceed in accordance with the contract.

The suspension will be in effect through March 31, 2005 and the first chargeable working day after the suspension ends will be April 1, 2005.

This suspension relates only to field site construction activities. Contractor Design of these facilities shall continue. Administrative procedures will continue on the design process.

The State and the Contractor mutually agree that complete design submittals for the outstanding portions of the Temporary Bypass Structure, without any Engineer requested enhancements, will be submitted in accordance with the following milestone dates:

East Tie-In Contractor Proposed Design Criteria and Final Design (without intermediate staging)	November 29, 2004
East Tie-In Design	January 31, 2005
West Tie-In Design	December 31, 2004
Viaduct Design	December 31, 2004

Complete design submittals shall comply with the requirements of Special Provisions Section 5-1.12, "Contractor Design", and shall encompass all phases of the work. This includes the foundations, substructure, and superstructure work in addition to any stage construction leading up to the final state of the structure.

The submitted Design shall be in accordance with the contract plans and specifications or may be modified as approved by the Engineer in writing.

In accordance with Section 10-1.20, "Time Related Overhead," of the Special Provisions, the lump sum bid item for, "Time Related Overhead" will not be adjusted. The Contractor agrees to accept payment based on an Agreed Unit Price of $10,387.94/day for 210 days for a lump sum total equal to $2,181,467.40 for the duration of the suspension period as compensation for direct and other impacted costs including payment for personnel, equipment and material costs at the project site incurred during the suspension period which is not related to item work. Payment for equipment and material are paid in accordance with Section 8.109,"Right of Way Delay," of the Standard Specifications. The State reserves the right to modify the agreed unit price with a supplement to this change order if there are reductions in equipment, material and other verifiable costs. The Contractor shall notify the State immediately of such changes. The days in which the suspension is in effect will not be considered working days.

By accepting this change order the Contractor further agrees to rescind and drop further pursuit of claims for the issues presented in Notice of Potential Claim (NOPC) No. 5, as this change order is considered the full resolution thereof.

Total estimated cost of Adjustment of Compensation at Agreed Unit Price .....$ 2,181,467.40

STATE OF CALIFORNIA - DEPARTMENT OF TRANSPORTATION

CONTRACT CHANGE ORDER

Change Requested by: Engineer

CCO: 24	Suppl. No. 0	Contract No. 04 - 0120R4	Road SF-80-12.6/13.2	FED. AID LOC.: ACBRIM-080-1(097)N

Estimated Cost: Increase ☑ Decrease ☐ $2,181,467.40

By reason of this order the time of completion will be adjusted as follows: 0 days

Submitted by			
Signature Lourdes David	Resident Engineer: LOURDES DAVID	Date 1/18/05
Approval Recommended by			
Signature Lourdes David	Construction Engineer: LOURDES DAVID	Date 1/18/05
Engineer Approval by			
Signature	(Print name and title) AMER BATA - Chief	Date 1/31/05

We the undersigned contractor, have given careful consideration to the change proposed and agree, if this proposal is approved, that we will provide all equipment, furnish the materials, except as may otherwise be noted above, and perform all services necessary for the work above specified, and will accept as full payment therefor the prices shown above.

NOTE: If you, the contractor, do not sign acceptance of this order, your attention is directed to the requirements of the specifications as to proceeding with the ordered work and filing a written protest within the time therein specified.

Contractor Acceptance by		
Signature	(Print name and title) DANIEL E. HINICK	Date 1/27/05

STATE OF CALIFORNIA - DEPARTMENT OF TRANSPORTATION

CONTRACT CHANGE ORDER MEMORANDUM

DATE: 1/28/2005

TO: AMER BATA / LOURDES DAVID	FILE: **E.A.** 04 - 0120R4
	CO-RTE-PM SF-80-12.6/13.2
FROM: LOURDES DAVID	**FED. NO.** ACBRIM-080-1(097)N
CCO#: **24** SUPPLEMENT#: **0** Category Code: **FHBB**	CONTINGENCY BALANCE (incl. this change): **$1,452,726.09**
COST: **$2,181,467.40** INCREASE ☑ DECREASE ☐	HEADQUARTERS APPROVAL REQUIRED? ☑ YES ☐ NO
SUPPLEMENTAL FUNDS PROVIDED: **$0.00**	IS THIS REQUEST IN ACCORDANCE WITH ENVIRONMENTAL DOCUMENTS? ☑ YES ☐ NO
CCO DESCRIPTION: East & West Tie-In Temp Suspension	**PROJECT DESCRIPTION:** CONSTRUCT ROUTE 80 TEMP BYPASS STRUCTURE

LOCATION: IN THE CITY AND COUNTY OF SAN FRANCISCO FROM YERBA BUENA TUNNEL TO 0.6 KM EAST OF THE YERBA BUENA TUNNEL

THIS CHANGE ORDER PROVIDES FOR:

for temporary suspension of portions of the contract from September 3, 2004 through March 31, 2005. This suspension relates only to field site construction activities. Contractor Design of these facilities shall continue. Administrative procedures will continue on the design process.

This Contract Change Order (CCO) is to accommodate the extension of Contract 04-0120G4 (Substation and Retrofit), to mitigate delays resulting from the SAS 04-0120F4 contract, to delay switching traffic onto the Temporary Bypass Structure (TBS) until 2006, and to finalize necessary enhancement needed on this contract to extend the service performance for the TBS. The Contractor is allowed per contract to build the foundations without the complete design in place. This would make it more costly to construct any enhancements later because it would be like retrofitting a brand new bridge. The logistic costs for doing that would be high.

Janet Adams - Project Manager, Amer Bata, Area Construction Manager - San Francisco Oakland Bay Bridge, Trinh Lai, Project Engineer, and Robert Kobal, Caltrans' Headquarters Assistant Construction Coordinator, concur with this change.

In accordance with Section 10-1.20, "Time Related Overhead," of the Special Provisions, the lump sum bid item for Time Related Overhead will not be used. The Contractor agrees to accept payment based on an Agreed Unit Price of $10,387.94/day for 210 days for a lump sum total equal to $2,181,467.40 for the duration of the suspension period as compensation for direct and other impacted costs including payment for personnel, equipment and material costs at the project site incurred during the suspension period which is not related to item work. All costs are field verified. Payment for equipment and material are paid in accordance with Section 8.109, "Right of Way Delay", of the Standard Specifications.

This work is not covered by any contract items. Therefore, payment for the Adjustment of Compensation of this change order will be a Unit Price of $10,387.94/day for an estimated total cost of $2,181,467.40, which can be financed from the contingency fund. This contract change order does not include future extensions that are likely to be needed for this contract at full TRO rates ($12,632/day or $88,000+/week), and additional ROW costs. A cost analysis for this change order is on file.

Additional time extensions may be necessary factoring into an actual award date for the skyway extension work (formerly SAS contract).

No adjustment of the contract time is warranted, as the days in which the suspension is in effect will not be considered working days.

By accepting this change order the Contractor further agrees to rescind and drop further pursuit of claims for the issues presented in Notice of Potential Claim (NOPC) No. 5 (the costs for delaying the contractor to perform foundation work), as this change order is considered full resolution thereof.

CONCURRED BY:		
Construction Engineer:	Lourdes David	Date 10/26/2004
Bridge Engineer:		Date
FHWA Representative:	Nancy E. Bobb	Date 1/3/2005
Project Engineer:	Trinh Lai	Date 2/15/2004
Other (specify): Amer Bata, Area Construction Manager - SFOBB		Date 10/26/2004
Robert Kobal, HQs Assist Construction Coordinator		Date 2/15/2004
Janet Adams, Proj. Manager		Date 1/14/2005
District Prior Approval By:		Date
HQ (Issue Approve) By:	Ken Darby, HQs CCO Engineer	Date 1/26/2005
Resident Engineer's Signature:		Date 1-28-05

ESTIMATE OF COST

	THIS REQUEST	TOTAL TO DATE
ITEMS	$0.00	$0.00
FORCE ACCOUNT	$0.00	$0.00
AGREED PRICE	$0.00	$0.00
ADJUSTMENT	$2,181,467.40	$2,181,467.40
TOTAL	$2,181,467.40	$2,181,467.40

FEDERAL PARTICIPATION

☑ PARTICIPATING ☐ PARTICIPATING IN PART ☑ NONE
☐ NON-PARTICIPATING (MAINTENANCE) ☐ NON-PARTICIPATING

FEDERAL SEGREGATION (if more than one Funding Source or P.I.P. type)
☑ CCO FUNDED PER CONTRACT ☐ CCO FUNDED AS FOLLOWS

FEDERAL FUNDING SOURCE	PERCENT

CONTRACT CHANGE ORDER

Change Requested by: Engineer

CCO: 24	Suppl. No. 1	Contract No. 04 - 0120R4	Road SF-80-12.6/13.2	FED. AID LOC.: ACBRIM-080-1(097)N

To: **CC MYERS INC**

You are directed to make the following changes from the plans and specifications or do the following described work not included in the plans and specifications for this contract. ***NOTE: This change order is not effective until approved by the Engineer.***

Description of work to be done, estimate of quantities and prices to be paid. (Segregate between additional work at contract price, agreed price and force account.) Unless otherwise stated, rates for rental of equipment cover only such time as equipment is actually used and no allowance will be made for idle time. This last percentage shown is the net accumulated increase or decrease from the original quantity in the Engineer's Estimate.

Adjustment of Compensation at Unit Price:

Continue to provide inclinometer readings at the slope area between Bents 48 and 49 during the temporary suspension (September 3, 2004 - March 31, 2005) provided by Contract Change Order 24.

For the work of providing extra inclinometer readings, the contractor will be paid $1,689.06 per inclinometer reading for an estimated eighteen (18) readings for an estimated total cost of $30,403.08. This unit price constitutes full compensation, including all markups, for the work of this change.

Estimated Total Cost of Adjustment of Compensation at Agreed Unit Price: $30,403.08

Adjustment of Compensation at Lump Sum:

As stated in the original Contract Change Order (CCO) 24: "The State reserves the right to modify the agreed unit price with a supplement to this change order (CCO 24) if there are reductions in equipment, material and other verifiable costs."

Some of the equipment, which was listed as idle equipment in determining the Agreed Unit Price of CCO 24, was utilized on other change orders. Therefore this change order provides an adjustment of compensation crediting the Agreed Unit Price of CCO 24 for this reduction in idle equipment cost.

For this reduction in equipment costs, the contractor agrees to credit the State at Adjustment of Compensation at an Agreed Lump Sum of ($620.09). This sum constitutes full and complete compensation, including all markups, for this portion of the change order.

Total credit of Adjustment of Compensation at Agreed Lump Sum .....($620.09)

Estimated Cost: **Increase** ☑ **Decrease** ☐ **$29,782.99**

By reason of this order the time of completion will be adjusted as follows: 0 days

Submitted by

Signature	Resident Engineer: LOURDES DAVID	Date 9/31/05

Approval Recommended by

Signature	Construction Engineer: LOURDES DAVID	Date 8/31/05

Engineer Approval by

Signature	(Print name and title) AMER BATA - Chief	Date 9/27/05

We the undersigned contractor, have given careful consideration to the change proposed and agree, if this proposal is approved, that we will provide all equipment, furnish the materials, except as may otherwise be noted above, and perform all services necessary for the work above specified, and will accept as full payment therefor the prices shown above.

NOTE: If you, the contractor, do not sign acceptance of this order, your attention is directed to the requirements of the specifications as to proceeding with the ordered work and filing a written protest within the time therein specified.

Contractor Acceptance by

Signature	(Print name and title) DEWEY C. LEE, JR. Contract Administrator	Date 9/21/05

STATE OF CALIFORNIA - DEPARTMENT OF TRANSPORTATION

CONTRACT CHANGE ORDER MEMORANDUM

TO: AMER BATA / LOURDES DAVID	FILE: **E.A.** 04 - 0120R4
FROM: LOURDES DAVID	**CO-RTE-PM** SF-80-12.6/13.2
	FED. NO. ACBRIM-080-1(097)N
CCO#: **24** SUPPLEMENT#: **1** Category Code: **FHBB**	CONTINGENCY BALANCE (incl. this change) **($3,706,576.81)**
COST: **$29,782.99** INCREASE ☑ DECREASE ☐	HEADQUARTERS APPROVAL REQUIRED? ☑ YES ☐ NO
SUPPLEMENTAL FUNDS PROVIDED: **$0.00**	IS THIS REQUEST IN ACCORDANCE WITH ENVIRONMENTAL DOCUMENTS? ☑ YES ☐ NO
CCO DESCRIPTION: Inclinometer readings & equip credit	**PROJECT DESCRIPTION:** CONSTRUCT ROUTE 80 TEMP BYPASS STRUCTURE

LOCATION: IN THE CITY AND COUNTY OF SAN FRANCISCO FROM YERBA BUENA TUNNEL TO 0.6 KM EAST OF THE YERBA BUENA TUNNEL

THIS CHANGE ORDER PROVIDES FOR:

(1) Provide compensation for continuing to provide inclinometer readings at the slope area between Bents 48 and 49 during the temporary suspension (September 3, 2004 - March 31, 2005) provided by Contract Change Order (CCO) 24.

(2) Provide reduction in compensation of Agreed Unit Price of CCO 24, since some of the idle equipment listed on CCO 24 was actually utilized on other CCOs.

(1) Section 5 1.14, "Contractor Design - Geotechnical Investigation" of the Special Provisions states that: "Due to the steep gradients of the restricted slope area designated on the plans, only geological site reconnaissance has been conducted. .. .. .. The slope shall be monitored during construction of the TBS to check for any slope displacement within 200 meters of either side of the TBS. .. .. .. Vertical and horizontal displacements of the slope shall be monitored continuously and shall be accurately measured and recorded at least weekly during construction of the TBS."

The slope area between Bents 48 and 49 is the area designated on the contract plans as the restricted area addressed by Section 5-1.14 of the Special Provisions. The contractor is providing inclinometer readings to monitor slope displacement in this restricted area. As slope displacement is still of concern during the suspension, these inclinometer readings need to continue during the suspension. Inclinometer readings during the suspension would be extra readings - not anticipated at bid time. Therefore this change order provides compensation for these extra inclinometer readings during the time of the suspension.

(2) As stated in the original Contract Change Order (CCO) 24: "The State reserves the right to modify the agreed unit price with a supplement to this change order (CCO 24) if there are reductions in equipment, material and other verifiable costs."

Some of the equipment, which was listed as idle equipment in determining the Agreed Unit Price of CCO 24, was utilized on other change orders. Therefore this change order provides an adjustment of compensation crediting the Agreed Unit Price of CCO 24 for this reduction in idle equipment cost.

Robert Kobal, Headquarters' Assistant Construction Coordinator, concurs with this change. On 4/13/05 Amer Bata, Area Construction Manager - SFOBB, and Lourdes David, Construction Engineer, granted District Prior Approval of this change order. Design and Maintenance concurrence is not required as this work is temporary and does not affect the final design.

(1) For the work of providing extra inclinometer readings, the contractor will be compensated at Adjustment of Compensation at Agreed Unit Price of $1,689.06 per inclinometer reading for an estimated Eighteen (18) readings for an estimated total cost of $30,403.08, which can be financed from the contingency fund. This price is found to be fair and reasonable based on a force account analysis submitted by the Contractor and verified by the Engineer. This analysis is on file.

(2) For the reduction in equipment costs, the State will be credited at Adjustment of Compensation at an Agreed Lump Sum of ($620.09), which will be returned to the contingency fund. This credit is found to be fair and reasonable based on a force account analysis prepared by the Engineer. This analysis is on file.

No adjustment of contract time is warranted by this change, as it does not affect the controlling operation.

CONCURRED BY:		
Construction Engineer:	Lourdes David	Date3/22/2005
Bridge Engineer:	Gary Lai	Date3/22/2005
FHWA Representative:		Date
Project Engineer:		Date
Other (specify): Robert Kobal, HQs Assist Construction Coordinator		Date3/28/2005
		Date
		Date
District Prior Approval By:	Amer Bata, Area Construction Ma	Date4/13/2005
HQ (Issue Approve) By:		Date
Resident Engineer's Signature:		Date 8/31/05

ESTIMATE OF COST

	THIS REQUEST	TOTAL TO DATE
ITEMS	$0.00	$4,812,000.00
FORCE ACCOUNT	$0.00	$0.00
AGREED PRICE	$0.00	$0.00
ADJUSTMENT	$29,782.99	$2,227,741.31
TOTAL	$29,782.99	$7,039,741.31

FEDERAL PARTICIPATION

☑ PARTICIPATING ☐ PARTICIPATING IN PART ☐ NONE
☐ NON-PARTICIPATING (MAINTENANCE) ☐ NON-PARTICIPATING

FEDERAL SEGREGATION (if more than one Funding Source or P.I.P. type)
☑ CCO FUNDED PER CONTRACT ☐ CCO FUNDED AS FOLLOWS

FEDERAL FUNDING SOURCE	PERCENT

CONTRACT CHANGE ORDER

Change Requested by: Engineer

CCO: 24	Suppl. No. 2	Contract No. 04 - 0120R4	Road SF-80-12.6/13.2	FED. AID LOC.: ACBRIM-080-1(097)N

To: **CC MYERS INC**

You are directed to make the following changes from the plans and specifications or do the following described work not included in the plans and specifications for this contract. ***NOTE: This change order is not effective until approved by the Engineer.***

Description of work to be done, estimate of quantities and prices to be paid. (Segregate between additional work at contract price, agreed price and force account.) Unless otherwise stated, rates for rental of equipment cover only such time as equipment is actually used and no allowance will be made for idle time. This last percentage shown is the net accumulated increase or decrease from the original quantity in the Engineer's Estimate.

Adjustment of Compensation at Lump Sum:

In accordance with Section 8-1.05, "Temporary Suspension of Work", of the Standard Specifications, and State Letter No. 349 dated March 24, 2005, the contract completion date will be extended by an amount of 381 working days to coincide with the period of suspension for portions of the contract work from April 1, 2005 to April 16, 2006. The suspended work entails all construction field activities that will affect the existing Route 80 mainline traffic and the existing structure. All other work shall proceed in accordance with the contract. Contractor Design of these facilities and administrative procedures shall continue on the design process.

The following activities will remain unaffected by the temporary suspension:

1. All design, fabrication and non-field activities
2. All field work that does not require permanent closure of ramps and connectors and as authorized by the Engineer.
3. Maintainence of the approved Storm Water Pollution Prevention Plan (SWPPP) for the entire project.
4. Maintainence of the project site for public convenience and safety.

Adjustment Deferred on Excess Quantity Increase:

Payment for quantities of Item No. 8, " Time-Related Overhead", in excess of 149% of the contract lump sum price bid will be adjusted in accordance with Section 10-1.20 "Time-Related Overhead", of the Special Provisions. Determination of the adjustment is deferred until completion of work on this item.

Adjustment of compensation for Time Related Overhead:

Item No. 8 Time Related Overhead adjusted by 381 Working Days (+80.20%) = $4,812,631.58 (+80.20%)

Total cost of Adjustment of Compensation at Lump Sum $4,812,631.58

Acceptance of this change does not preclude the contractor from pursuing a claim for additional compensation on behalf of their sub-contarctor, Condon-Johnson & Associates, Inc. for overhead costs.

In accordance with the 6th paragraph of Section 8-1.05, "TEMPORARY SUSPENSION OF WORK," of the Standard Specifications, any additional compensation due, "other than overhead costs", as a result of this suspension will be deferred until the end of the suspension period.

CONTRACT CHANGE ORDER

Change Requested by: Engineer

CCO: 24	Suppl. No. 2	Contract No. 04 - 0120R4	Road SF-80-12.6/13.2	FED. AID LOC.: ACBRIM-080-1(097)N

Estimated Cost: Increase ☑ Decrease ☐ **$4,812,631.58**

By reason of this order the time of completion will be adjusted as follows: 381 days

Submitted by

Signature	Resident Engineer: MAHANTESH ANIGOL	Date 04/04/06

Approval Recommended by

Signature	Construction Engineer: RICK MORROW	Date 4/13/06

Engineer Approval by

Signature	(Print name and title) PETER SIEGENTHALER - Chief	Date

We the undersigned contractor, have given careful consideration to the change proposed and agree, if this proposal is approved, that we will provide all equipment, furnish the materials, except as may otherwise be noted above, and perform all services necessary for the work above specified, and will accept as full payment therefor the prices shown above.

NOTE: If you, the contractor, do not sign acceptance of this order, your attention is directed to the requirements of the specifications as to proceeding with the ordered work and filing a written protest within the time therein specified.

Contractor Acceptance by

Signature	(Print name and title) DANIEL E. HIMICK	Date 4/24/06

STATE OF CALIFORNIA - DEPARTMENT OF TRANSPORTATION

CONTRACT CHANGE ORDER

Change Requested by: Contractor

CCO: 25	Suppl. No. 0	Contract No. 04 - 0120R4	Road SF-80-12.6/13.2	FED. AID LOC.: ACBRIM-080-1(097)N

To: **CC MYERS INC**

You are directed to make the following changes from the plans and specifications or do the following described work not included in the plans and specifications for this contract. ***NOTE: This change order is not effective until approved by the Engineer.***

Description of work to be done, estimate of quantities and prices to be paid. (Segregate between additional work at contract price, agreed price and force account.) Unless otherwise stated, rates for rental of equipment cover only such time as equipment is actually used and no allowance will be made for idle time. This last percentage shown is the net accumulated increase or decrease from the original quantity in the Engineer's Estimate.

Adjustment of Compensation at Lump Sum:

The limits of the support structure limits as shown in the contract plans may be increased to allow the encroachment of the south portion of the footings of Bents 48, 49, and 52 for the Viaduct and West Tie-In segments, as shown in the Contractor's design plans on page 2 of 2 of this contract change order.

Any future deviations of the construction support limits will be subject to the approval of the Engineer.

Section 5-1.116, "Differing Site Conditions", of the Standard Specifications shall not apply to those areas outside of the TBS support limits. The Contractor further agrees that no additional compensation shall be made due to the Contractor's requested change.

There will be no other compensation, including but not limited to, inefficiencies, "right of way" delays, escalation of labor, material and equipment costs, all overheads, underutilization of equipment, and any other costs. This applies to those areas outside of the TBS support limits.

Total credit for Adjustment of Compensation at Agreed Lump Sum .....($19,000.00)

Estimated Cost: Increase ☐ Decrease ☑ **($19,000.00)**

By reason of this order the time of completion will be adjusted as follows: 0 days

Submitted by

Signature	Resident Engineer: LOURDES DAVID	Date 11/30/04

Approval Recommended by

Signature	Construction Engineer: LOURDES DAVID	Date 11/30/04

Engineer Approval by

Signature	(Print name and title) AMER BATA - Chief	Date 1/18/05

We the undersigned contractor, have given careful consideration to the change proposed and agree, if this proposal is approved, that we will provide all equipm furnish the materials, except as may otherwise be noted above, and perform all services necessary for the work above specified, and will accept as full paymer therefor the prices shown above.

NOTE: If you, the contractor, do not sign acceptance of this order, your attention is directed to the requirements of the specifications as to proceeding with the ordered work and filing a written protest within the time therein specified.

Contractor Acceptance by

Signature	(Print name and title)	Date
Dewey C Lee Jr	DEWEY C. LEE, JR. Contract Administrator	1/10/05

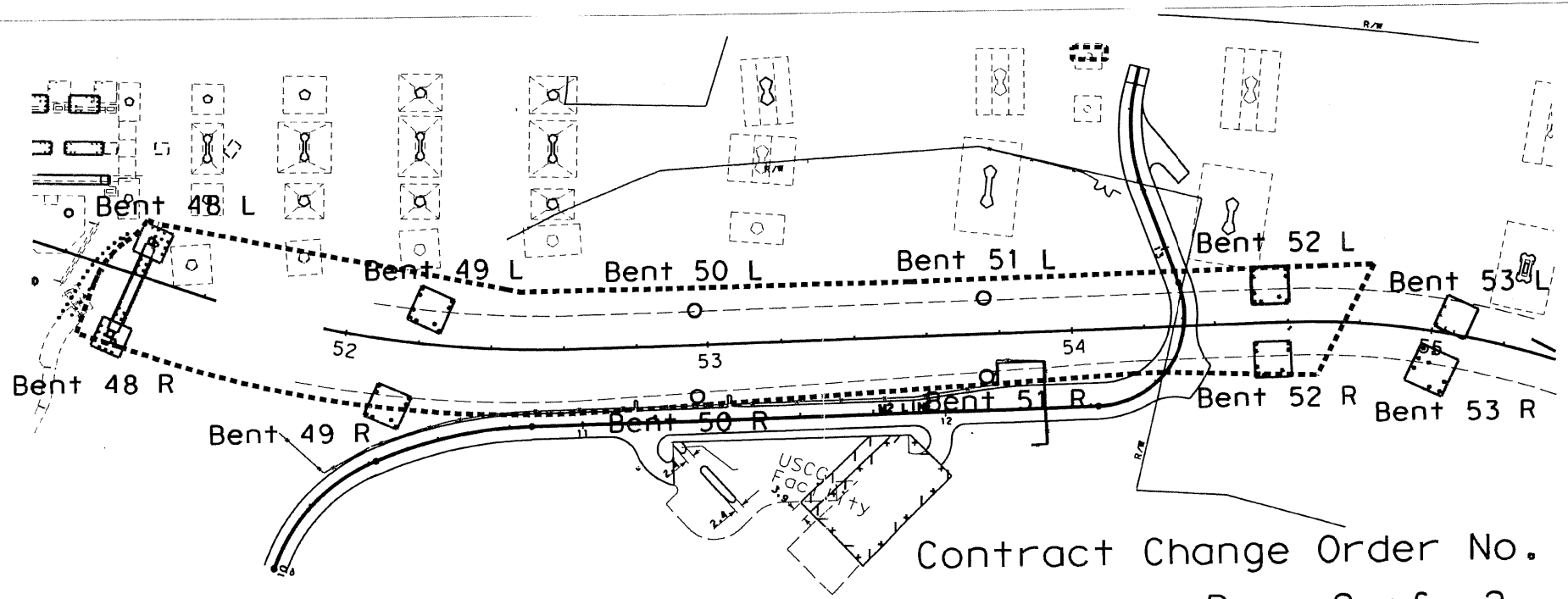

Contract Change Order No. 25

Page 2 of 2

R4 CONSTRUCTION LIMITS AND FOUNDATION

REGISTERED PROFESSIONAL ENGINEER
GARY J. LAI
No. 53385
Exp. 06-30-2007
CIVIL
STATE OF CALIFORNIA

...\R4 Contruction Limits.dgn 10/12/2004 10:31:43 AM

STATE OF CALIFORNIA - DEPARTMENT OF TRANSPORTATION

CONTRACT CHANGE ORDER MEMORANDUM

TO: AMER BATA / LOURDES DAVID	FILE: **E.A.** 04 - 0120R4
FROM: LOURDES DAVID	**CO-RTE-PM** SF-80-12.6/13.2
	FED. NO. ACBRIM-080-1(097)N
CCO#: **25** SUPPLEMENT#: **0** Category Code: **CHPA**	CONTINGENCY BALANCE (incl. this change): **$3,713,606.50**
COST: **($19,000.00)** INCREASE ☐ DECREASE ☑	HEADQUARTERS APPROVAL REQUIRED? ☑ YES ☐ NO
SUPPLEMENTAL FUNDS PROVIDED: **$0.00**	IS THIS REQUEST IN ACCORDANCE WITH ENVIRONMENTAL DOCUMENTS? ☑ YES ☐ NO
CCO DESCRIPTION: Limits of support structure deviations	**PROJECT DESCRIPTION:** CONSTRUCT ROUTE 80 TEMP BYPASS STRUCTURE

LOCATION: IN THE CITY AND COUNTY OF SAN FRANCISCO FROM YERBA BUENA TUNNEL TO 0.6 KM EAST OF THE YERBA BUENA TUNNEL

THIS CHANGE ORDER PROVIDES FOR:

allowance of limits of the support structure limits as shown in the contract plans to be increased to allow the encroachment of the south portion of the footings of Bents 48, 49, and 52 for the Viaduct and West Tie-In segments, as shown in the Contractor's design plans on page 2 of 2 of this contract change order.

This Contract requires that a Temporary Bypass Structure (TBS) be designed and constructed by the Contractor to detour traffic on WB and EB Highway 80 between the eastern tunnel portal on Yerba Buena Island to Pier E1 on the San Francisco Oakland Bay Bridge (SFOBB). The contract plans and specifications provide an alignment and limits inside which the substructure of the bridge is to be contained.

The Contractor's design submittal has one footing for the West Tie-In segment and two footings for the Viaduct structure that fall outside the southern line of the TBS support limits. The Contractor has requested relief from this requirement and in exchange has agreed to credit the State the sum of $ 19,000.00 for the future costs of removing portions of these footings located outside the plan limits should it be required. At this time, there is no impact to the State in granting the allowance of the construction of these footings as planned by the Contractor.

Peter Siegenthaler, Principal Transportation Engineer - SFOBB, Dan Adams, Substructures Technical Specialist - Office of Structures Design, and Steve Hulsebus, Office Chief SFOBB Roadway Design - District 04 Toll Bridge Design, concur with this change. Maintenance concurrence is not required as there are no new impacts to maintenance in allowing this change.

There are no established bid items for this work. Therefore, the State will be credited at Adjustment of Compensation at Agreed Lump Sum Price of ($19,000.00). This price is found fair and reasonable based on a force account analysis submitted by the Contractor and verified by the Engineer. This analysis is on file in the project records.

No adjustment of the contract time is warranted, as this change does not affect the controlling operation.

CONCURRED BY:	
Construction Engineer: Lourdes David	Date 10/7/2004
Bridge Engineer: Gary Lai	Date 9/17/2004
FHWA Representative:	Date
Project Engineer:	Date
Other (specify): Peter Siegenthaler, Principal TE - SFOBB	Date 9/17/2004
Dan Adams, Substructure Tech Specialist Des Engr	Date 9/17/2004
Steve Hulsebus, Chief Rdway Design D4 Toll Bridge	Date 9/17/2004
District Prior Approval By:	Date
HQ (Issue Approve) By:	Date
Resident Engineer's Signature:	Date 3/8/05

ESTIMATE OF COST

	THIS REQUEST	TOTAL TO DATE
ITEMS	$0.00	$0.00
FORCE ACCOUNT	$0.00	$0.00
AGREED PRICE	$0.00	$0.00
ADJUSTMENT	($19,000.00)	($19,000.00)
TOTAL	($19,000.00)	($19,000.00)

FEDERAL PARTICIPATION

☑ PARTICIPATING ☐ PARTICIPATING IN PART ☐ NONE
☐ NON-PARTICIPATING (MAINTENANCE) ☐ NON-PARTICIPATING

FEDERAL SEGREGATION (if more than one Funding Source or P.I.P. type)
☑ CCO FUNDED PER CONTRACT ☐ CCO FUNDED AS FOLLOWS

FEDERAL FUNDING SOURCE	PERCENT

STATE OF CALIFORNIA - DEPARTMENT OF TRANSPORTATION

CONTRACT CHANGE ORDER

Change Requested by: Contractor

CCO: 26	Suppl. No. 0	Contract No. 04 - 0120R4	Road SF-80-12.6/13.2	FED. AID LOC.: ACBRIM-080-1(097)N

To: CC MYERS INC

You are directed to make the following changes from the plans and specifications or do the following described work not included in the plans and specifications for this contract. ***NOTE: This change order is not effective until approved by the Engineer.***

Description of work to be done, estimate of quantities and prices to be paid. (Segregate between additional work at contract price, agreed price and force account.) Unless otherwise stated, rates for rental of equipment cover only such time as equipment is actually used and no allowance will be made for idle time. This last percentage shown is the net accumulated increase or decrease from the original quantity in the Engineer's Estimate.

Adjustment of Compensation at Lump Sum:

The first paragraph of Design Criteria Section 4.2.1, "Balanced Stiffness", on contract plan sheet 98 of 193 (Revised Per Addendum No. 11 dated October 06, 2003) shall be revised as follows:

"For the Viaduct Structure, the ratio of effective stiffness between any two bents within a frame or between any two columns within a bent shall satisfy equation 4.1, and the ratio of effective stiffness between adjacent bents within a frame or between adjacent columns within a bent shall satisfy equation 4.2."

For this work the contractor will be paid the agreed lump sum of $0.00. This sum constitutes full compensation, including markups, for this change.

Total cost of Adjustment of Compensation at Agreed Lump Sum Price $0.00

Estimated Cost: **Increase** ☐ **Decrease** ☐ **$0.00**

By reason of this order the time of completion will be adjusted as follows: 0 days

Submitted by		
Signature Lourdes David	**Resident Engineer:** LOURDES DAVID	**Date** 1-27-05
Approval Recommended by		
Signature Lourdes David	**Construction Engineer:** LOURDES DAVID	**Date** 1-27-05
Engineer Approval by		
Signature Lourdes David	**(Print name and title)** LOURDES DAVID - Construction Engineer	**Date** 4-20-05

We the undersigned contractor, have given careful consideration to the change proposed and agree, if this proposal is approved, that we will provide all equipment, furnish the materials, except as may otherwise be noted above, and perform all services necessary for the work above specified, and will accept as full payment therefor the prices shown above.

NOTE: If you, the contractor, do not sign acceptance of this order, your attention is directed to the requirements of the specifications as to proceeding with the ordered work and filing a written protest within the time therein specified.

Contractor Acceptance by		
Signature Dewey C Lee, Jr	**(Print name and title)** DEWEY C. LEE, JR. Contract Administrator	**Date** 4/7/05

STATE OF CALIFORNIA - DEPARTMENT OF TRANSPORTATION

CONTRACT CHANGE ORDER MEMORANDUM

TO: AMER BATA / LOURDES DAVID	FILE: **E.A.** 04 - 0120R4
	CO-RTE-PM SF-80-12.6/13.2
FROM: LOURDES DAVID	**FED. NO.** ACBRIM-080-1(097)N
CCO#: **26** SUPPLEMENT#: **0** Category Code: **CHPR**	CONTINGENCY BALANCE (incl. this change): **$1,452,726.09**
COST: **$0.00** INCREASE ☐ DECREASE ☐	HEADQUARTERS APPROVAL REQUIRED? ☑ YES ☐ NO
SUPPLEMENTAL FUNDS PROVIDED: **$0.00**	IS THIS REQUEST IN ACCORDANCE WITH ENVIRONMENTAL DOCUMENTS? ☑ YES ☐ NO
CCO DESCRIPTION: Bent 48 Articulation	**PROJECT DESCRIPTION:** CONSTRUCT ROUTE 80 TEMP BYPASS STRUCTURE

LOCATION: IN THE CITY AND COUNTY OF SAN FRANCISCO FROM YERBA BUENA TUNNEL TO 0.6 KM EAST OF THE YERBA BUENA TUNNEL

THIS CHANGE ORDER PROVIDES FOR:

The first paragraph of Design Criteria Section 4.2.1, "Balanced Stiffness", on contract plan sheet 98 of 193 shall be revised such that the Balanced Stiffness equations do not apply to the abutments.

This Contract requires that a structure be designed and constructed by the Contractor. The contract plans and specifications provide the necessary alignments and criteria by which the design is to be developed.

Article 4.2.1 of the design criteria was taken from Section 7.1.1 of the Seismic Design Criteria (SDC) Manual, which talks of the benefits of balanced stiffness between bents within a frame and also columns within a bent. When developing the criteria for this project, the Project Engineer also wanted to balance the abutment stiffness with the bent stiffness to keep the end span (Span 48) from experiencing excessive displacements. Since this abutment would not be a typical abutment with retained soil and shear keys, the Project Engineer was concerned that the Contractor would propose a design that provided too little stiffness at the abutment.

However, the Contractor's proposed design is utilizing much more flexible bents than the concept design had envisioned. The Contractor's design is not balanced in that the abutment bearings are much stiffer than the bents. Currently, the Contractor's design displacement at the abutments is within an acceptable range. In order for this design to comply with all of the Design Criteria, a sliding bearing would be needed at the abutments. This would result in unacceptable excessive displacements in upwards of 11" which is in conflict with the Project Engineer's original intent at this location.

Since requiring that the abutment bearing stiffness be balanced with the bent stiffness would result in a structure that would not have an improved performance over the Contractor's original design, the design review team is in agreement with the Contractor's request to delete this portion of the criteria as it applies to the abutments.

This proposed change will make Design Criteria Article 4.2.1 read identical to SDC 7.1.1.

Dan Adams, Design Engineer, Trinh Lai, Project Engineer, and Robert Kobal, Headquarters' Assistant Construction Coordinator, concur with this change. On 2/1/05 Nancy Bobb, FHWA Rep, granted FHWA Prior Approval of this change order. On 4/13/05 Amer Bata, Area Construction Manager - SFOBB, and Lourdes David, Construction Engineer, granted District Prior Approval of this change order.

Maintenance concurrence is not required, as this work does not affect the maintenance of the structure.

Payment for the work of this change order will be at Adjustment of Compensation at an Agreed Lump Sum of $0.00. This price is found to be fair and reasonable because the work of this change order has not begun and the change affects only design parameters. Quantities, equipment and manpower are not affected.

No adjustment of contract time is warranted by this change, as it does not affect the controlling operation.

CONTRACT CHANGE ORDER MEMORANDUM

CONCURRED BY:		
Construction Engineer:	Lourdes David	Date 1/19/2005
Bridge Engineer:	Gary Lai	Date 1/19/2005
FHWA Representative:	Nancy Bobb	Date 2/1/2005
Project Engineer:	Trinh Lai	Date 1/26/2005
Other (specify): Dan Adams, Design Engineer		Date 1/3/2005
Robert Kobal, HQs Assist Construction Coordinator		Date 1/26/2005
		Date
District Prior Approval By:	Amer Bata, Area Construction Man	Date 4/13/2005
HQ (Issue Approve) By:		Date
Resident Engineer's Signature:		Date 4/19/05

ESTIMATE OF COST

	THIS REQUEST	TOTAL TO DATE
ITEMS	$0.00	$0.00
FORCE ACCOUNT	$0.00	$0.00
AGREED PRICE	$0.00	$0.00
ADJUSTMENT	$0.00	$0.00
TOTAL	$0.00	$0.00

FEDERAL PARTICIPATION

☑ PARTICIPATING ☐ PARTICIPATING IN PART ☐ NONE
☐ NON-PARTICIPATING (MAINTENANCE) ☐ NON-PARTICIPATING

FEDERAL SEGREGATION (if more than one Funding Source or P.I.P. type)
☑ CCO FUNDED PER CONTRACT ☐ CCO FUNDED AS FOLLOWS

FEDERAL FUNDING SOURCE	PERCENT

CONTRACT CHANGE ORDER

Change Requested by: Engineer

CCO: 27	Suppl. No. 0	Contract No. 04 - 0120R4	Road SF-80-12.6/13.2	FED. AID LOC.: ACBRIM-080-1(097)N

To: **CC MYERS INC**

You are directed to make the following changes from the plans and specifications or do the following described work not included in the plans and specifications for this contract. ***NOTE: This change order is not effective until approved by the Engineer.***

Description of work to be done, estimate of quantities and prices to be paid. (Segregate between additional work at contract price, agreed price and force account.) Unless otherwise stated, rates for rental of equipment cover only such time as equipment is actually used and no allowance will be made for idle time. This last percentage shown is the net accumulated increase or decrease from the original quantity in the Engineer's Estimate.

Adjustment of Compensation at Lump Sum:

Redesign and construct the footing at Bent 52 Left to clear the future W4R footing as shown on Sheets 2 and 3 of 3 of this Contract Change Order. The clearances from the W4R footing line to the piles and footing for Bent 52 Left shall be 0.60m and 1.0m respectively. No shoring design for the future W4R footing shall be required.

For this work, the Contractor will be paid the sum of $ 94,386.51. This sum constitutes full compensation including markups, for furnishing all labor, materials, tools equipment and incidentals for doing all the work involved in this change.

Estimated cost of Adjustment of Compensation at Lump Sum $94,386.51

Estimated Cost: **Increase** ☑ **Decrease** ☐ **$94,386.51**

By reason of this order the time of completion will be adjusted as follows: 0 days

Submitted by

Signature	Resident Engineer: LOURDES DAVID	Date 12/7/05

Approval Recommended by

Signature	Construction Engineer: LOURDES DAVID	Date 12/7/05

Engineer Approval by

Signature	(Print name and title) AMER BATA - Chief	Date

We the undersigned contractor, have given careful consideration to the change proposed and agree, if this proposal is approved, that we will provide all equipment, furnish the materials, except as may otherwise be noted above, and perform all services necessary for the work above specified, and will accept as full payment therefor the prices shown above.

NOTE: If you, the contractor, do not sign acceptance of this order, your attention is directed to the requirements of the specifications as to proceeding with the ordered work and filing a written protest within the time therein specified.

Contractor Acceptance by

Signature	(Print name and title)	Date

NOTE:

1. For limits of payment for structure excavation and backfill, see "Bent Elevation W3" sheet.
2. Utility locations shown are approximate, for utility relocations and abandonments see rdwy plans.

Caltrans Metric

			TOTAL PROJECT	NO.	SHEETS
04	SF	80			

REGISTERED ENGINEER - CIVIL

PLANS APPROVAL DATE

The State of California or its officers or agents shall not be responsible for the accuracy or completeness of electronic copies of this plan sheet.

REGISTERED PROFESSIONAL ENGINEER A.L. ELY No. 18880 Exp. 6-30-05 CIVIL STATE OF CALIFORNIA

T.Y. LIN / MOFFATT & NICHOL
825 BATTERY STREET
SAN FRANCISCO, CA 94111

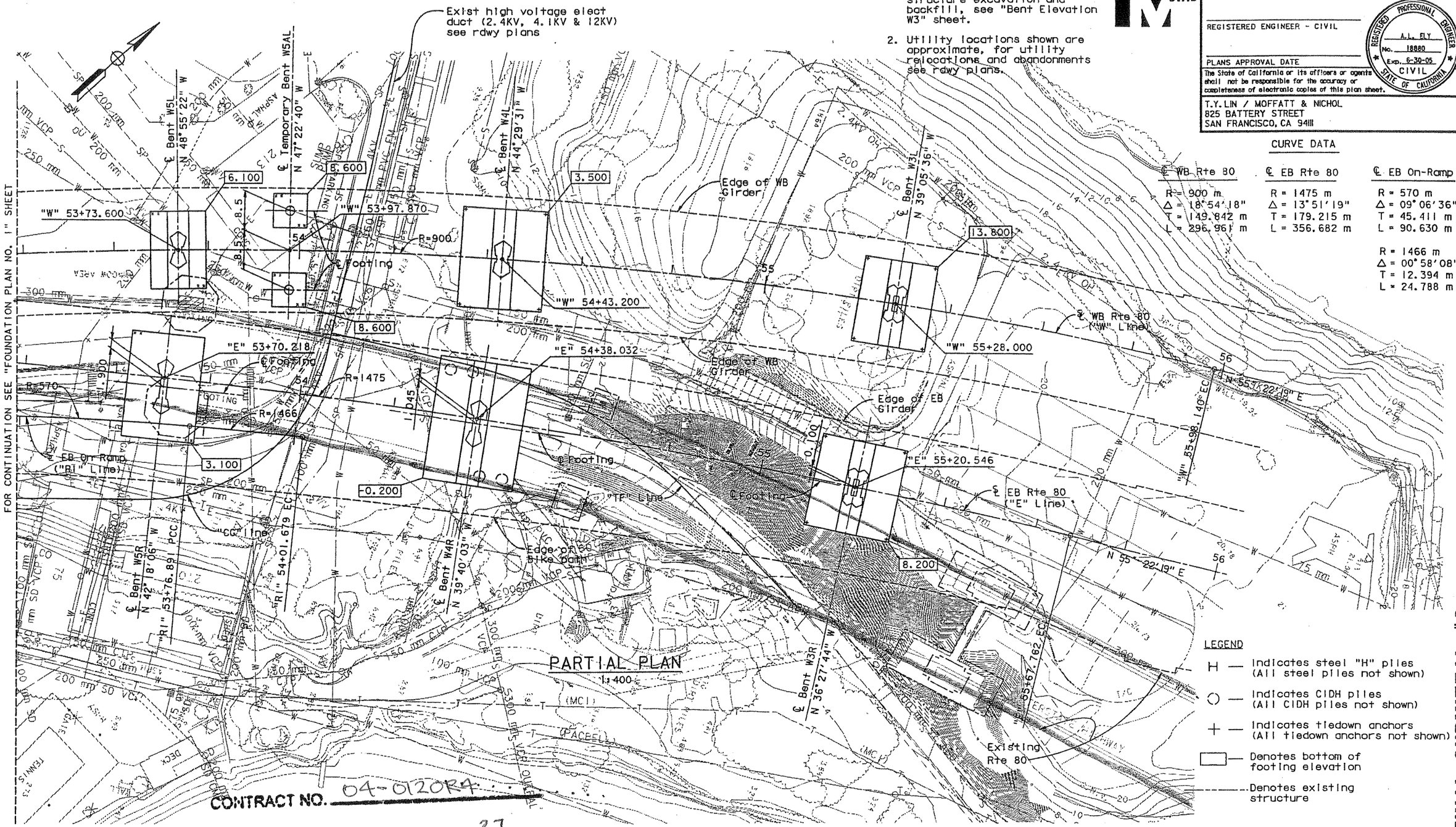

CURVE DATA

℄ WB Rte 80	℄ EB Rte 80	℄ EB On-Ramp
R = 900 m	R = 1475 m	R = 570 m
Δ = 18°54'18"	Δ = 13°51'19"	Δ = 09°06'36"
T = 149.842 m	T = 179.215 m	T = 45.411 m
L = 296.961 m	L = 356.682 m	L = 90.630 m
		R = 1466 m
		Δ = 00°58'08"
		T = 12.394 m
		L = 24.788 m

LEGEND

- H — Indicates steel "H" piles (All steel piles not shown)
- ○ — Indicates CIDH piles (All CIDH piles not shown)
- + — Indicates tiedown anchors (All tiedown anchors not shown)
- ▭ — Denotes bottom of footing elevation
- ------ Denotes existing structure

CONTRACT NO. 04-0120R4

CONTRACT CHANGE ORDER NO. 27

SHEET 2 OF 3

ALL DIMENSIONS ARE IN METERS UNLESS OTHERWISE SHOWN

SAN FRANCISCO OAKLAND BAY BRIDGE
EAST SPAN SEISMIC SAFETY PROJECT

YBI TRANSITION STRUCTURES

FOUNDATION PLAN NO. 2

DESIGN OVERSIGHT - JOHN MOOK	SCALE:	VERT. DATUM	DESIGN BY Desai	CHECKED Jain	PREPARED FOR THE STATE OF CALIFORNIA DEPARTMENT OF TRANSPORTATION
	PHOTOGRAMMETRY AS OF:	ALIGNMENT TIES	DETAILS BY Van Ryn/Zucchi/Mai	CHECKED Jain	
SIGN OFF DATE	SURVEYED BY	DRAFTED BY	QUANTITIES BY Liao	CHECKED E. Nichol	
	FIELD CHECKED BY	CHECKED BY			

Jai Birdy
PROJECT ENGINEER

BRIDGE NO. 34-0006 L/R
KILOMETER POST

Rev. Date: 5-18-98

ORIGINAL SCALE IN MILLIMETERS FOR REDUCED PLANS 0 10 20 30 40 50 60 70 80 90 100

CU 04251
EA 0120H1

DISREGARD PRINTS BEARING EARLIER REVISION DATES

REVISION DATES (PRELIMINARY STAGE ONLY) 11/12/01 2/14/02 3/4/02 3/26/02 5/18/02 2/14/03

SHEET 13 OF 211

FILE => p:\civil\4141\100%\TS\ecfnp02.dgn

FINAL SUBMITTAL #2

DATE PLOTTED => 02/18/03 TIME PLOTTED => 12:56:53 PM

USERNAME => LMai

INITIAL PROFESSIONAL APPROVAL DATE

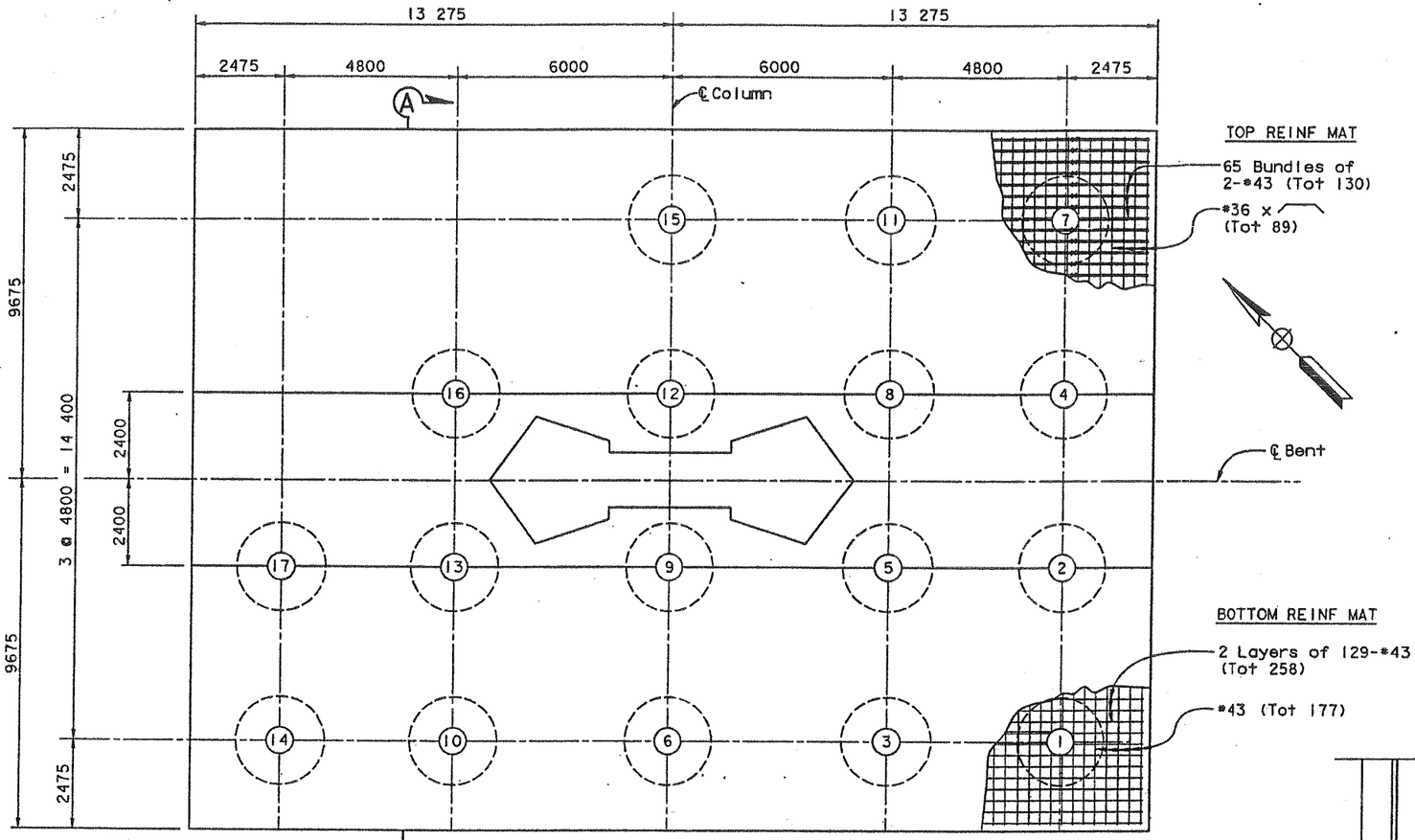

Note: Northeast corner of footing to be benched into existing bedrock

PLAN

(Tot 17 piles)
1:80

NOTE:
- ⊸ Indicates bundled bars
- (4) Indicates pile no. on pile data table, see "Pile & Tiedown Anchor Details" sheet

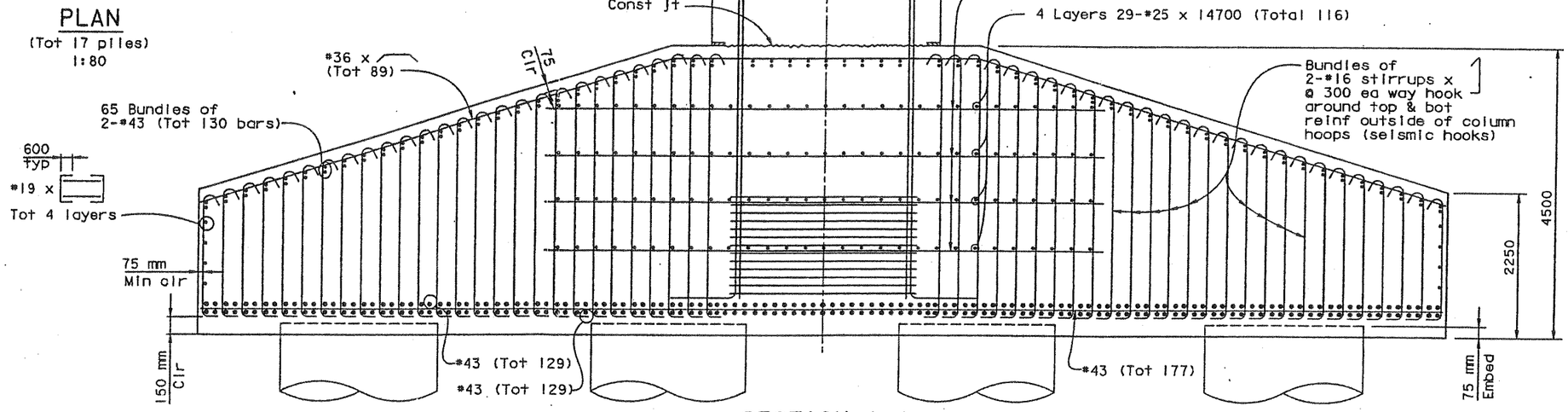

SECTION A-A

1:40
ALL DIMENSIONS ARE IN MILLIMETERS UNLESS OTHERWISE SHOWN

DIST.	COUNTY	ROUTE	KILOMETER POST TOTAL PROJECT	SHEET NO.	TOTAL SHEETS
04	SF	80			

REGISTERED ENGINEER - CIVIL

PLANS APPROVAL DATE

REGISTERED PROFESSIONAL ENGINEER — A.L. ELY — No. 18880 — Exp. 6-30-05 — CIVIL — STATE OF CALIFORNIA

The State of California or its officers or agents shall not be responsible for the accuracy or completeness of electronic copies of this plan sheet.

T.Y. LIN / MOFFATT & NICHOL
825 BATTERY STREET
SAN FRANCISCO, CA 94111

CONTRACT NO. 04-0120R4

CONTRACT CHANGE ORDER NO. 27

SHEET 3 OF 3

FINAL SUBMITTAL #2

DATE PLOTTED => 02/18/03 TIME PLOTTED => 12:58:24 PM
USERNAME => LMai
FEB 14, 2003

DESIGN OVERSIGHT - JOHN MOOK	DESIGN	BY Dodd	CHECKED Desai	PREPARED FOR THE STATE OF CALIFORNIA DEPARTMENT OF TRANSPORTATION	Jal Birdy, PROJECT ENGINEER
SIGN OFF DATE	DETAILS	BY van Ryn/Zucchi/Mai	CHECKED Jain		BRIDGE NO. 34-0006 L/R
Rev. Dates 5-18-98	QUANTITIES	BY Liao	CHECKED E. Nichol		KILOMETER POST

ORIGINAL SCALE IN MILLIMETERS FOR REDUCED PLANS 0 10 20 30 40 50 60 70 80 90 100

CU 04251
EA 0120H1

DISREGARD PRINTS BEARING EARLIER REVISION DATES →

REVISION DATES (PRELIMINARY STAGE ONLY): 11/27/01 | 2/14/02 | 3/4/02 | 3/28/02 | 5/10/02 | 7/14/03

SHEET 83 OF 211

SAN FRANCISCO OAKLAND BAY BRIDGE
EAST SPAN SEISMIC SAFETY PROJECT

YBI TRANSITION STRUCTURES

BENT W4R DETAILS NO. 2

FILE => p:\civil\4141\100%\TS\eebnt49det.dgn

STATE OF CALIFORNIA - DEPARTMENT OF TRANSPORTATION

CONTRACT CHANGE ORDER MEMORANDUM

DATE: 10/28/2005 Page 1 of 1

TO: RICK MORROW / LOURDES DAVID	FILE: **E.A.** 04 - 0120R4
FROM: LOURDES DAVID	**CO-RTE-PM** SF-80-12.6/13.2
	FED. NO. ACBRIM-080-1(097)N
CCO#: **27** SUPPLEMENT#: **0** Category Code: **CHPG**	CONTINGENCY BALANCE (incl. this change) **$969,321.81**
COST: **$94,386.51** INCREASE ☑ DECREASE ☐	HEADQUARTERS APPROVAL REQUIRED? ☐ YES ☑ NO
SUPPLEMENTAL FUNDS PROVIDED: **$0.00**	IS THIS REQUEST IN ACCORDANCE WITH ENVIRONMENTAL DOCUMENTS? ☑ YES ☐ NO
CCO DESCRIPTION: Bent 52L Transition Struc Ftg Conflict	**PROJECT DESCRIPTION:** CONSTRUCT ROUTE 80 TEMP BYPASS STRUCTURE

LOCATION: IN THE CITY AND COUNTY OF SAN FRANCISCO FROM YERBA BUENA TUNNEL TO 0.6 KM EAST OF THE YERBA BUENA TUNNEL

THIS CHANGE ORDER PROVIDES FOR:

redesigning and constructing the footing at Bent 52 Left to clear the future W4R footing as shown on Sheets 2 through 5 of the Contract Change Order. The clearances from the W4R footing line to the piles and footing for Bent 52 Left shall be 1.0m and 0.6m respectively. No shoring design for the future W4R footing shall be required.

This Contract requires that a temporary bypass structure (TBS) be designed and constructed by the Contractor to detour traffic on WB and EB Highway 80 between the eastern tunnel portal on Yerba Buena Island to Pier E1 on the San Francisco Oakland Bay Bridge.

Contract plan sheets 142 & 143 of 193 specify the limits allowed for structure supports on the Viaduct segment of the TBS. The locations of the future transition structure project footings are also shown on these plans. However, the future W4R footings were not shown on these plan sheets and at the same time will encroach upon the specified support limits for this project. In the review of the preliminary plan sets for the Viaduct segment, it was determined that the location of Bent 52 Left would conflict with the future W4R footing. Rather than redesign the footing on the transition structure project, it was determined that the Bent 52 Left footing should be redesigned to clear the W4R footing.

The agreed lump sum of $ 94,386.51 provided in the contract change order is based on a force account analysis. Records and calculations used to determine the agreed price basis are on file in the project records.

This change has been discussed with and concurred by Dan T. Adams of the Office of Structure Designs, Trinh Lai of District 04 Toll Bridge Design, Robert Kobal - HQ Asst. Construction Coordinator, and Jon Tapping - Project Manager.

Maintenance concurrence is not required, as this work does not affect the maintenance of the structure.

No adjustment of the contract time is warranted, as this change does not affect the controlling operation.

CONCURRED BY:		
Construction Engineer:	Amer Bata	Date3/28/2005
Bridge Engineer:	Gary Lai	Date3/28/2005
FHWA Representative:		Date
Project Engineer:	Trinh Lai	Date3/28/2005
Other (specify): Dan Adams, Design Engineer		Date3/28/2005
Robert Kobal - HQ Asst. Const. Coordinator		Date12/6/2005
Jon Tapping - Project Manager		Date12/7/2005
District Prior Approval By:		Date
HQ (Issue Approve) By:		Date
Resident Engineer's Signature:		Date 12/22/05

ESTIMATE OF COST

	THIS REQUEST	TOTAL TO DATE
ITEMS	$0.00	$0.00
FORCE ACCOUNT	$0.00	$0.00
AGREED PRICE	$0.00	$0.00
ADJUSTMENT	$94,386.51	$94,386.51
TOTAL	$94,386.51	$94,386.51

FEDERAL PARTICIPATION

☑ PARTICIPATING ☐ PARTICIPATING IN PART ☐ NONE
☐ NON-PARTICIPATING (MAINTENANCE) ☐ NON-PARTICIPATING

FEDERAL SEGREGATION (if more than one Funding Source or P.I.P. type)
☑ CCO FUNDED PER CONTRACT ☐ CCO FUNDED AS FOLLOWS

FEDERAL FUNDING SOURCE	PERCENT

STATE OF CALIFORNIA - DEPARTMENT OF TRANSPORTATION

CONTRACT CHANGE ORDER

Change Requested by: Engineer

CCO: 28	Suppl. No. 0	Contract No. 04 - 0120R4	Road SF-80-12.6/13.2	FED. AID LOC.: ACBRIM-080-1(097)N

To: CC MYERS INC

You are directed to make the following changes from the plans and specifications or do the following described work not included in the plans and specifications for this contract. ***NOTE: This change order is not effective until approved by the Engineer.***

Description of work to be done, estimate of quantities and prices to be paid. (Segregate between additional work at contract price, agreed price and force account.) Unless otherwise stated, rates for rental of equipment cover only such time as equipment is actually used and no allowance will be made for idle time. This last percentage shown is the net accumulated increase or decrease from the original quantity in the Engineer's Estimate.

Extra Work at Force Account:

(1) Place hydroseed soil erosion control in disturbed soils area on the flat area on top of the slopes around the pier columns constructed under Contract 04-0120C4 as determined by the Engineer and in accordance with specification sheets 2 and 3 of this change order.

(2) Regrade around existing Drainage Inlet (D.I.) located west of the W2 West Pier as shown on sheet 4 of this change order and as directed by the Engineer. Excavate around the D.I. at 2 meter radius to one meter depth and backfill using Class 2 aggregate base to grade in lifts to 95% compaction. Place A.C. pavement to dimensions shown around D.I. and one meter width of V-Ditch. Match A.C. grade at grated manhole cover.

No adjustment of the contract time is warranted, as this change does not affect the controlling operation.

Estimated cost of Extra Work at Force Account $20,000.00

Estimated Cost: **Increase** ☑ **Decrease** ☐ **$20,000.00**

By reason of this order the time of completion will be adjusted as follows: 0 days

Submitted by

Signature	Resident Engineer: LOURDES DAVID	Date 10/12/04

Approval Recommended by

Signature	Construction Engineer: LOURDES DAVID	Date 11/12/04

Engineer Approval by

Signature	(Print name and title) LOURDES DAVID - Construction Engineer	Date 3/8/05

We the undersigned contractor, have given careful consideration to the change proposed and agree, if this proposal is approved, that we will provide all equipment, furnish the materials, except as may otherwise be noted above, and perform all services necessary for the work above specified, and will accept as full payment therefor the prices shown above.

NOTE: If you, the contractor, do not sign acceptance of this order, your attention is directed to the requirements of the specifications as to proceeding with the ordered work and filing a written protest within the time therein specified.

Contractor Acceptance by

Signature	(Print name and title) DEWEY C. LEE, JR. Contract Administrator	Date 12/6/04

10-1 EROSION CONTROL (TYPE D)

Erosion control (Type D) shall conform to the provisions in Section 20-3, "Erosion Control," of the Standard Specifications and these special provisions and shall consist of applying erosion control materials to, all disturbed soil areas and areas directed by the Engineer.

MATERIALS

Materials shall conform to the provisions in Section 20-2, "Materials," of the Standard Specifications and these special provisions.

Seed

Seed shall conform to the provisions in Section 20-2.10, "Seed," of the Standard Specifications. Individual seed species shall be measured and mixed in the presence of the Engineer.

Seed shall be delivered to the project site in unopened separate containers with the seed tag attached. Containers without a seed tag attached will not be accepted.

A sample of approximately 30 g of seed will be taken from each seed container by the Engineer.

Legume Seed

Legume seed shall be pellet-inoculated or industrial-inoculated and shall conform to the following:

A. Inoculated seed shall be inoculated in conformance with the provisions in Section 20-2.10, "Seed," of the Standard Specifications.
B. Inoculated seed shall have a calcium carbonate coating.
C. Industrial-inoculated seed shall be inoculated with Rhizobia and coated using an industrial process by a manufacturer whose principal business is seed coating and seed inoculation.
D. Industrial-inoculated seed shall be sown within 180 calendar days after inoculation.
E. Legume seed shall consist of the following:

LEGUME SEED

Botanical Name (Common Name)	Percent Germination (Minimum)	Kilograms Pure Live Seed Per Hectare (Slope Measurement)
Trifolium incarnatum (Crimson Clover)	40	12.0

Non-Legume Seed

Non-legume seed shall consist of the following:

NON-LEGUME SEED

Botanical Name (Common Name)	Percent Germination (Minimum)	Kilograms Pure Live Seed Per Hectare (Slope Measurement)
Eschscholzia californica California Poppy	35	1.0
Hordeum vulgare 'UC 603' Cereal Barley	90	50.0

Commercial Fertilizer

Commercial fertilizer shall conform to the provisions in Section 20-2.02, "Commercial Fertilizer," of the Standard Specifications.

Stabilizing Emulsion

Stabilizing emulsion shall conform to the provisions in Section 20-2.11, "Stabilizing Emulsion," of the Standard Specifications and these special provisions.

Stabilizing emulsion shall be in a dry powder form, may be reemulsifiable, and shall be a processed organic adhesive derivative of Plantago ovata used as a soil tackifier.

APPLICATION

Erosion control materials shall be applied in a 1-step process. Multiple tank loads may be required to apply all erosion control materials uniformly:

The following mixture in the proportions indicated shall be applied with hydro-seeding equipment within 60 minutes after the seed has been added to the mixture:

Material	Kilograms Per Hectare (Slope Measurement)
Legume Seed	12.0
Non-Legume Seed	51.0
Fiber	2,800
Stabilizing emulsion	140
Commercial Fertilizer	500

The ratio of total water to total stabilizing emulsion in the mixture shall be as recommended by the manufacturer.

The proportions of erosion control materials may be changed by the Engineer to meet field conditions.

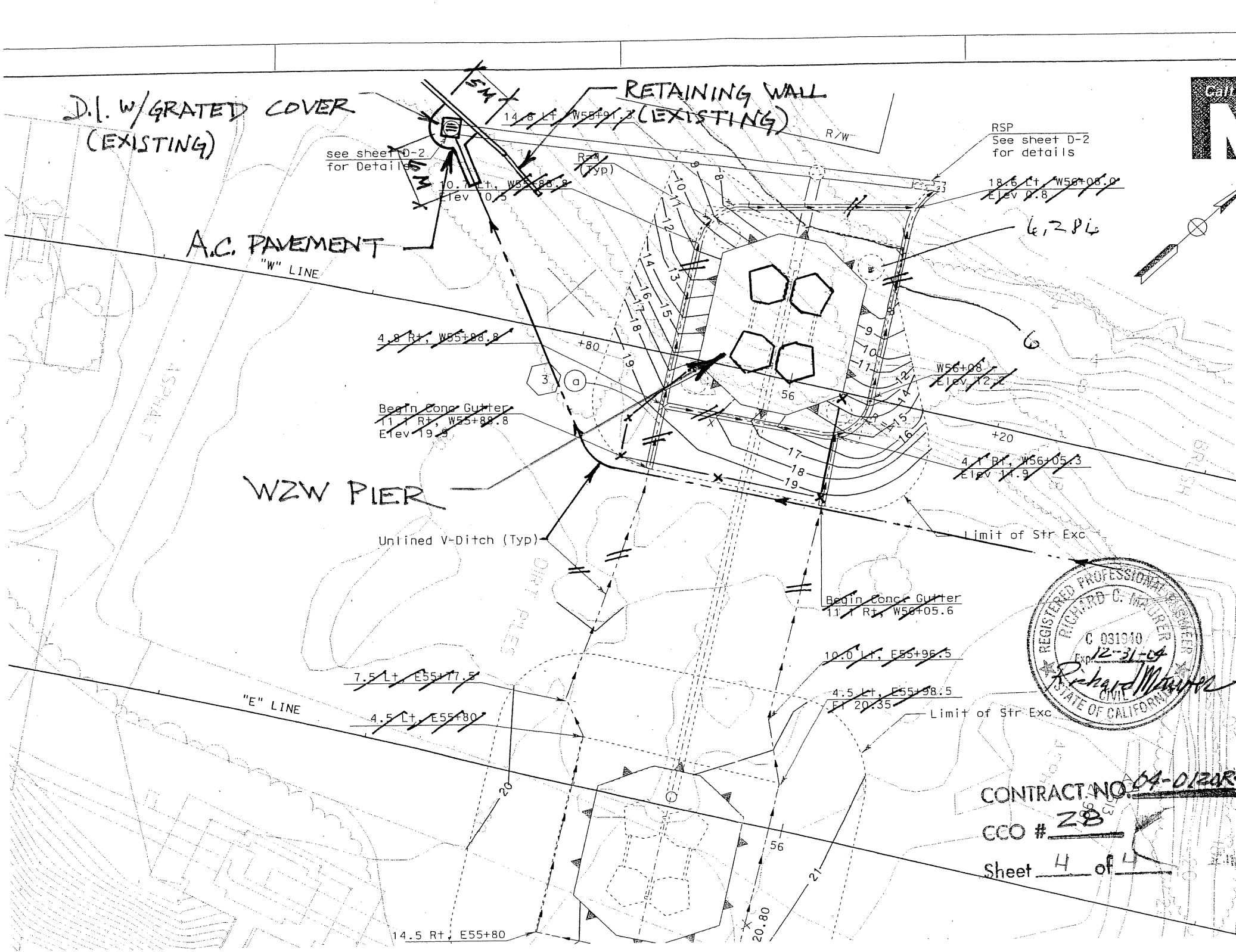
D.I. W/GRATED COVER
(EXISTING)
RETAINING WALL
(EXISTING)
5M
6M
see sheet D-2
for Details
14.8 Lt, W55+91.3
R-4
(Typ)
10.7 Lt, W55+88.8
Elev 10.5
A.C. PAVEMENT
"W" LINE
RSP
See sheet D-2
for details
18.6 Lt, W56+08.0
Elev 0.8
6,286
6
4.8 Rt, W55+88.8
+80
W56+08
Elev 12.2
Begin Conc Gutter
11.1 Rt, W55+88.8
Elev 19.9
+20
4.1 Rt, W56+05.3
Elev 14.9
WZW PIER
Unlined V-Ditch (Typ)
Limit of Str Exc
Begin Conc Gutter
11.1 Rt, W56+05.6
10.0 Lt, E55+96.5
7.5 Lt, E55+77.5
4.5 Lt, E55+98.5
El 20.35
"E" LINE
4.5 Lt, E55+80
Limit of Str Exc
14.5 Rt, E55+80
20.80
REGISTERED PROFESSIONAL ENGINEER
RICHARD C. MAURER
C 031940
Exp. 12-31-04
CIVIL
STATE OF CALIFORNIA
Richard Maurer
CONTRACT NO. 04-0120R
CCO # 28
Sheet 4 of 4

STATE OF CALIFORNIA - DEPARTMENT OF TRANSPORTATION

CONTRACT CHANGE ORDER MEMORANDUM

TO: AMER BATA / LOURDES DAVID	FILE: **E.A.** 04 - 0120R4
FROM: LOURDES DAVID	**CO-RTE-PM** SF-80-12.6/13.2
	FED. NO. ACBRIM-080-1(097)N
CCO#: **28** SUPPLEMENT#: **0** Category Code: **CDPF**	CONTINGENCY BALANCE (incl. this change): **$1,433,322.79**
COST: **$20,000.00** INCREASE ☑ DECREASE ☐	HEADQUARTERS APPROVAL REQUIRED? ☐ YES ☑ NO
SUPPLEMENTAL FUNDS PROVIDED: **$0.00**	IS THIS REQUEST IN ACCORDANCE WITH ENVIRONMENTAL DOCUMENTS? ☑ YES ☐ NO
CCO DESCRIPTION: Add hydroseed to area around W2 Columns	**PROJECT DESCRIPTION:** CONSTRUCT ROUTE 80 TEMP BYPASS STRUCTURE

LOCATION: IN THE CITY AND COUNTY OF SAN FRANCISCO FROM YERBA BUENA TUNNEL TO 0.6 KM EAST OF THE YERBA BUENA TUNNEL

THIS CHANGE ORDER PROVIDES FOR:

(1) Placing hydroseed soil erosion control in disturbed soils area on the flat area on top of the slopes around the pier columns constructed under Contract 04-0120C4 as determined by the Engineer and in accordance with specification sheets 2 and 3 of this change order.

(2) Regrading around existing Drainage Inlet (D.I.) located west of the W2 West Pier as shown on sheet 4 of this change order. Excavate around the D.I. at two meter radius to one meter depth and backfill using Class 2 aggregate base to grade in lifts to 95% compaction. Place A.C. pavement to dimensions shown around D.I. and one meter width of V-Ditch. Match A.C. grade at grated manhole cover.

(1) According to Paul Elshoff, Brown & Caldwell Water Quality Specialist for Caltrans District 4 Division of Construction, the final erosion control measures were not included in the project plans for project 04-0120C4, with exception of the area around the north column slope. The soils in the flat area on top of the slopes were not addressed. Project 04-0120C4 was granted relief of maintenance on October 20, 2004 without addressing this issue. Amer Bata, Area Construction Manager for SFOBB, recommends that the erosion control work be addressed under this contract. This change order addresses the erosion control for the flat area on top of the slopes around the pier columns constructed under Contract 04-0120C4.

(2) It was observed that storm water did not drain into the existing D.I. as intended by the 04-0120C4 Contract. The storm water was being absorbed into the ground around the D.I instead. This change order adds a non-porous A.C. surface over this area so the storm water will reach the D.I. rather than be absorbed by the existing ground around the existing D.I. The existing manhole has an existing grated manhole cover (as shown on sheet 4 of this change order). As stated in the change order the A.C. final grade is to match the final grade of the existing grated manhole cover, which covers the existing D.I.

This work is temporary. Future contracts will be providing the final grading and erosion control in this area. This change order work is being requested in order to provide erosion control until the other contracts do provide the final erosion control.

Isaac Perez, Hydraulics Engineer, and David Yam, Landscape Architect, concur with this change. Design and Maintenance concurrence is not required, as the work of this change order is temporary and does not affect the original contract design.

This work is not covered by any contract items. Therefore, payment for this work will be at Extra Work at Force Account for an estimated cost of $20,000.00, which can be financed from the contingency fund.

No adjustment of the contract time is warranted, as this change does not affect the controlling operation.

RECEIVED
001576 APR-7 05

CONCURRED BY:	
Construction Engineer: Lourdes David L.D.	Date 0/21/2004
Bridge Engineer:	Date
FHWA Representative:	Date
Project Engineer:	Date
Other (specify): Paul Elshoff, Water Quality Specialist	Date 0/14/2004
Isaac Perez, Hydraulics Engineer	Date 3/22/2005
David Yam, Landscape Architect	Date 0/14/2004
District Prior Approval By:	Date
HQ (Issue Approve) By:	Date
Resident Engineer's Signature: Lourdes David 3/22/05	Date

ESTIMATE OF COST

	THIS REQUEST	TOTAL TO DATE
ITEMS	$0.00	$0.00
FORCE ACCOUNT	$20,000.00	$20,000.00
AGREED PRICE	$0.00	$0.00
ADJUSTMENT	$0.00	$0.00
TOTAL	$20,000.00	$20,000.00

FEDERAL PARTICIPATION

☑ PARTICIPATING ☐ PARTICIPATING IN PART ☐ NONE
☐ NON-PARTICIPATING (MAINTENANCE) ☐ NON-PARTICIPATING

FEDERAL SEGREGATION (if more than one Funding Source or P.I.P. type)
☑ CCO FUNDED PER CONTRACT ☐ CCO FUNDED AS FOLLOWS

FEDERAL FUNDING SOURCE	PERCENT

STATE OF CALIFORNIA - DEPARTMENT OF TRANSPORTATION

CONTRACT CHANGE ORDER

Change Requested by: Engineer

CCO: 29	Suppl. No. 0	Contract No. 04 - 0120R4	Road SF-80-12.6/13.2	FED. AID LOC.: ACBRIM-080-1(097)N

To: **CC MYERS INC**

You are directed to make the following changes from the plans and specifications or do the following described work not included in the plans and specifications for this contract. ***NOTE: This change order is not effective until approved by the Engineer.***

Description of work to be done, estimate of quantities and prices to be paid. (Segregate between additional work at contract price, agreed price and force account.) Unless otherwise stated, rates for rental of equipment cover only such time as equipment is actually used and no allowance will be made for idle time. This last percentage shown is the net accumulated increase or decrease from the original quantity in the Engineer's Estimate.

Extra Work at Lump Sum:

Replace the main entry security gate surveillance camera for the United States Coast Guard base.

For this work, the contractor will be paid the sum of $3,542.00. This sum constitutes full compensation, including markups, for this change.

Total cost of Extra Work at Agreed Lump Sum $3,542.00

Estimated Cost: **Increase** ☑ **Decrease** ☐ **$3,542.00**

By reason of this order the time of completion will be adjusted as follows: 0 days

Submitted by

Signature	Resident Engineer: LOURDES DAVID	Date 2/7/05

Approval Recommended by

Signature	Construction Engineer: LOURDES DAVID	Date 2/7/05

Engineer Approval by

Signature	(Print name and title) LOURDES DAVID - Construction Engineer	Date 3/8/05

We the undersigned contractor, have given careful consideration to the change proposed and agree, if this proposal is approved, that we will provide all equipment, furnish the materials, except as may otherwise be noted above, and perform all services necessary for the work above specified, and will accept as full payment therefor the prices shown above.

NOTE: If you, the contractor, do not sign acceptance of this order, your attention is directed to the requirements of the specifications as to proceeding with the ordered work and filing a written protest within the time therein specified.

Contractor Acceptance by

Signature	(Print name and title) DEWEY C. LEE, JR. Contract Administrator	Date 2/28/05

STATE OF CALIFORNIA - DEPARTMENT OF TRANSPORTATION

CONTRACT CHANGE ORDER MEMORANDUM

TO: AMER BATA / LOURDES DAVID	FILE: **E.A.** 04 - 0120R4
FROM: LOURDES DAVID	**CO-RTE-PM** SF-80-12.6/13.2
	FED. NO. ACBRIM-080-1(097)N
CCO#: **29** SUPPLEMENT#: **0** Category Code: **CBPA**	CONTINGENCY BALANCE (incl. this change): **$1,439,854.59**
COST: **$3,542.00** INCREASE ☑ DECREASE ☐	HEADQUARTERS APPROVAL REQUIRED? ☐ YES ☑ NO
SUPPLEMENTAL FUNDS PROVIDED: **$0.00**	IS THIS REQUEST IN ACCORDANCE WITH ENVIRONMENTAL DOCUMENTS? ☑ YES ☐ NO
CCO DESCRIPTION: Replace surveillance camera	**PROJECT DESCRIPTION:** CONSTRUCT ROUTE 80 TEMP BYPASS STRUCTURE

LOCATION: IN THE CITY AND COUNTY OF SAN FRANCISCO FROM YERBA BUENA TUNNEL TO 0.6 KM EAST OF THE YERBA BUENA TUNNEL

THIS CHANGE ORDER PROVIDES FOR:

replacement of the main entry security gate surveillance camera for the United States Coast Guard (USCG) base.

The main entry security gate surveillance camera for the USCG base sustained water damage during recent storms. This change order replaces this camera.

This change was necessary in order to satisfy the agreement between the USCG and Caltrans.

Mark Shindler, Sr Right of Way Agent, requested this change. Trinh Lai, Project Engineer, concurs with this change. Design concurrence is not required as this change does not affect the design of the project. Maintenance concurrence is not required as this change restores the original intended design.

This work is not covered by any contract items. Therefore, payment for the Extra Work will be at Agreed Lump Sum of $3,542.00, which can be financed from the contingency fund. A detailed cost analysis is on file.

No adjustment of contract time is warranted by this change, as it does not affect the controlling operation.

CONCURRED BY:	
Construction Engineer: Lourdes David	Date 11/3/2004
Bridge Engineer:	Date
FHWA Representative:	Date
Project Engineer: Trinh Lai	Date 11/4/2004
Other (specify): Mark Shindler, Sr Right of Way Agent	Date 0/25/2004
	Date
	Date
District Prior Approval By:	Date
HQ (Issue Approve) By:	Date
Resident Engineer's Signature:	Date 2/7/05

ESTIMATE OF COST

	THIS REQUEST	TOTAL TO DATE
ITEMS	$0.00	$0.00
FORCE ACCOUNT	$0.00	$0.00
AGREED PRICE	$3,542.00	$3,542.00
ADJUSTMENT	$0.00	$0.00
TOTAL	$3,542.00	$3,542.00

FEDERAL PARTICIPATION

☑ PARTICIPATING ☐ PARTICIPATING IN PART ☐ NONE
☐ NON-PARTICIPATING (MAINTENANCE) ☐ NON-PARTICIPATING

FEDERAL SEGREGATION (if more than one Funding Source or P.I.P. type)
☑ CCO FUNDED PER CONTRACT ☐ CCO FUNDED AS FOLLOWS

FEDERAL FUNDING SOURCE	PERCENT

STATE OF CALIFORNIA - DEPARTMENT OF TRANSPORTATION

CONTRACT CHANGE ORDER

Change Requested by: Engineer

CCO: 30	Suppl. No. 0	Contract No. 04 - 0120R4	Road SF-80-12.6/13.2	FED. AID LOC.: ACBRIM-080-1(097)N

To: **CC MYERS INC**

You are directed to make the following changes from the plans and specifications or do the following described work not included in the plans and specifications for this contract. ***NOTE: This change order is not effective until approved by the Engineer.***

Description of work to be done, estimate of quantities and prices to be paid. (Segregate between additional work at contract price, agreed price and force account.) Unless otherwise stated, rates for rental of equipment cover only such time as equipment is actually used and no allowance will be made for idle time. This last percentage shown is the net accumulated increase or decrease from the original quantity in the Engineer's Estimate.

Adjustment of Compensation at Lump Sum:

Conduct additional elastic response spectrum analyses on the Viaduct segment of the proposed Temporary Bypass Structure for the following structural configurations:

a. Strutted columns for Bents 49, 50, 51, and 52 with pinned connections at the column strut/column connection.
b. Bent caps at Bents 49, 50, 51, and 52 with monolithic connections at the cap/column connection.

The structure will be assumed to have the same axial stiffness at the bent cap for the analytical assessment. The cap shall be sized with the expectation that a plastic hinge will form in the cap member prior to the formation of a plastic hinge in the column.

The analyses will be conducted at both D(EE) and D(LS) levels. The analyses shall be conducted with at least 200 modes of vibration included in the response analysis.

For this work, the contractor will be paid the sum of $10,700.00. This sum constitutes full compensation, including markups, for this change.

Total cost of Adjustment of Compensation at Agreed Lump Sum $10,700.00

Estimated Cost: **Increase** ☑ **Decrease** ☐ **$10,700.00**

By reason of this order the time of completion will be adjusted as follows: 0 days

Submitted by

Signature	Resident Engineer: LOURDES DAVID	Date 11-10-04

Approval Recommended by

Signature	Construction Engineer: LOURDES DAVID	Date 11-10-04

Engineer Approval by

Signature	(Print name and title) LOURDES DAVID - Construction Engineer	Date 5/27/05

We the undersigned contractor, have given careful consideration to the change proposed and agree, if this proposal is approved, that we will provide all equipment, furnish the materials, except as may otherwise be noted above, and perform all services necessary for the work above specified, and will accept as full payment therefor the prices shown above.

NOTE: If you, the contractor, do not sign acceptance of this order, your attention is directed to the requirements of the specifications as to proceeding with the ordered work and filing a written protest within the time therein specified.

Contractor Acceptance by

Signature	(Print name and title) DEWEY C. LEE, JR. Contract Administrator	Date 5/19/05

STATE OF CALIFORNIA - DEPARTMENT OF TRANSPORTATION

CONTRACT CHANGE ORDER MEMORANDUM

DATE: 4/18/2005 Page 1 of 1

TO: AMER BATA / LOURDES DAVID	FILE: **E.A.** 04 - 0120R4
	CO-RTE-PM SF-80-12.6/13.2
FROM: LOURDES DAVID	**FED. NO.** ACBRIM-080-1(097)N
CCO#: **30** SUPPLEMENT#: **0** Category Code: **CHSA**	CONTINGENCY BALANCE (incl. this change): **$3,693,372.80**
COST: **$10,700.00** INCREASE ☑ DECREASE ☐	HEADQUARTERS APPROVAL REQUIRED? ☐ YES ☑ NO
SUPPLEMENTAL FUNDS PROVIDED: **$0.00**	IS THIS REQUEST IN ACCORDANCE WITH ENVIRONMENTAL DOCUMENTS? ☑ YES ☐ NO
CCO DESCRIPTION: Additional elastic response analyses	**PROJECT DESCRIPTION:** CONSTRUCT ROUTE 80 TEMP BYPASS STRUCTURE

LOCATION: IN THE CITY AND COUNTY OF SAN FRANCISCO FROM YERBA BUENA TUNNEL TO 0.6 KM EAST OF THE YERBA BUENA TUNNEL

THIS CHANGE ORDER PROVIDES FOR:

conduction of additional elastic response spectrum analyses on the Viaduct segment of the proposed Temporary Bypass Structure.

This Contract requires that a temporary bypass structure (TBS) be designed and constructed by the Contractor to detour traffic on WB and EB Highway 80 between the eastern tunnel portal on Yerba Buena Island to Pier E1 on the San Francisco Oakland Bay Bridge. It is being completed as one segment of the New East Span corridor. The completed structure will allow a future transition structure to be built tying in the New East Span to the existing. This Contract was originally fast tracked for early completion to allow for a westbound opening of the New East Span. The corridor schedule has now been revised and an early completion of the TBS is no longer required. As a result, the State is in the process of determining options for the construction of the TBS and the required design life.

The Engineer is requesting an analysis of the viaduct with different connections at the tops of the columns. This work is in addition to that being completed by the Contractor's design engineers, but not outside the limits of the specifications. The Contractor's current design reflects but one way of satisfying the contract requirements. This work is being completed as a study for the Engineer to make a determination regarding the extension of the lifespan of the structure and cannot be completed by the Engineer. Therefore, the Engineer has directed that the Contractor's design engineers complete this work. The impact of the results of this study shall be determined at a later date.

Tom Ostrom, Structures Design Engineer, concurs with this change. On 4/13/05 Amer Bata, Area Construction Manager - SFOBB, and Lourdes David, Construction Engineer, granted District Prior Approval of this change order. Maintenance concurrence is not required for this change, as it does not impact the maintenance or serviceability of the structure.

Compensation for this work will be at Adjustment of Compensation at Agreed Lump Sum of $10,700.00, which can be financed from the contingency fund. A detailed cost analysis is on file.

No adjustment of contract time is warranted by this change, as it does not affect the controlling operation.

CONCURRED BY:	
Construction Engineer: Lourdes David	Date 0/29/2004
Bridge Engineer: Gary Lai	Date 0/29/2004
FHWA Representative:	Date
Project Engineer:	Date
Other (specify): Tom Ostrom, Structures Design Engineer	Date 0/29/2004
	Date
	Date
District Prior Approval By: Amer Bata, Area Construction Man	Date 4/13/2005
HQ (Issue Approve) By:	Date
Resident Engineer's Signature:	Date 4/19/05

ESTIMATE OF COST

	THIS REQUEST	TOTAL TO DATE
ITEMS	$0.00	$0.00
FORCE ACCOUNT	$0.00	$0.00
AGREED PRICE	$0.00	$0.00
ADJUSTMENT	$10,700.00	$10,700.00
TOTAL	$10,700.00	$10,700.00

FEDERAL PARTICIPATION

☑ PARTICIPATING ☐ PARTICIPATING IN PART ☐ NONE
☐ NON-PARTICIPATING (MAINTENANCE) ☐ NON-PARTICIPATING

FEDERAL SEGREGATION (if more than one Funding Source or P.I.P. type)
☑ CCO FUNDED PER CONTRACT ☐ CCO FUNDED AS FOLLOWS

FEDERAL FUNDING SOURCE	PERCENT

STATE OF CALIFORNIA - DEPARTMENT OF TRANSPORTATION

CONTRACT CHANGE ORDER

Change Requested by: Engineer

CCO: 31	Suppl. No. 0	Contract No. 04 - 0120R4	Road SF-80-12.6/13.2	FED. AID LOC.: ACBRIM-080-1(097)N

To: CC MYERS INC

You are directed to make the following changes from the plans and specifications or do the following described work not included in the plans and specifications for this contract. ***NOTE: This change order is not effective until approved by the Engineer.***

Description of work to be done, estimate of quantities and prices to be paid. (Segregate between additional work at contract price, agreed price and force account.) Unless otherwise stated, rates for rental of equipment cover only such time as equipment is actually used and no allowance will be made for idle time. This last percentage shown is the net accumulated increase or decrease from the original quantity in the Engineer's Estimate.

Extra Work at Force Account:

Implement sampling and analysis of the soils at locations that fall outside horizontal limits of the material classification zones of the excavation material determined to be hazardous as depicted on Contract Plan Sheet C-5 (Sheet 21 of 193), in accordance with Section 10-1.42, "Earthwork - Sampling and Analysis", of the contract Special Provisions, and as authorized by the Engineer.

As provided for in Section 10-1.42 of the Special Provisions: "Sampling and analysis of material excavated from outside the horizontal limits of the material classification zones shown on the plans will be paid for as extra work as provided for in Section 4-1.03D of the Standard Specifications."

Estimated cost of Extra Work at Force Account $20,000.00

Estimated Cost: **Increase** ☑ **Decrease** ☐ **$20,000.00**

By reason of this order the time of completion will be adjusted as follows: 0 days

Submitted by

Signature	Resident Engineer: LOURDES DAVID	Date 5/23/05

Approval Recommended by

Signature	Construction Engineer: LOURDES DAVID	Date 5/23/05

Engineer Approval by

Signature for L David	(Print name and title) LOURDES DAVID - Construction Engineer	Date 15 June 2005

We the undersigned contractor, have given careful consideration to the change proposed and agree, if this proposal is approved, that we will provide all equipment, furnish the materials, except as may otherwise be noted above, and perform all services necessary for the work above specified, and will accept as full payment therefor the prices shown above.

NOTE: If you, the contractor, do not sign acceptance of this order, your attention is directed to the requirements of the specifications as to proceeding with the ordered work and filing a written protest within the time therein specified.

Contractor Acceptance by

Signature	(Print name and title) DEWEY C. LEE, JR. Contract Administrator	Date 6/7/05

STATE OF CALIFORNIA - DEPARTMENT OF TRANSPORTATION

CONTRACT CHANGE ORDER MEMORANDUM

DATE: 5/20/2005 Page 1 of 1

TO: AMER BATA / LOURDES DAVID	FILE: **E.A.** 04 - 0120R4
FROM: LOURDES DAVID	**CO-RTE-PM** SF-80-12.6/13.2
	FED. NO. ACBRIM-080-1(097)N
CCO#: **31** SUPPLEMENT#: **0** Category Code: **CDSA**	CONTINGENCY BALANCE (incl. this change): **$1,393,063.79**
COST: **$20,000.00** INCREASE ☑ DECREASE ☐	HEADQUARTERS APPROVAL REQUIRED? ☐ YES ☑ NO
SUPPLEMENTAL FUNDS PROVIDED: **$20,000.00**	IS THIS REQUEST IN ACCORDANCE WITH ENVIRONMENTAL DOCUMENTS? ☑ YES ☐ NO
CCO DESCRIPTION: Soil analysis outside plan limits	**PROJECT DESCRIPTION:** CONSTRUCT ROUTE 80 TEMP BYPASS STRUCTURE

LOCATION: IN THE CITY AND COUNTY OF SAN FRANCISCO FROM YERBA BUENA TUNNEL TO 0.6 KM EAST OF THE YERBA BUENA TUNNEL

THIS CHANGE ORDER PROVIDES FOR:

compensation for sampling and analysis of material excavated from outside the horizontal limits of the material classification zones shown on the plans as provided for in Section 10-1.42, "Earthwork - Sampling and Analysis", of the contract Special Provisions, and as authorized by the Engineer.

No soil sampling and analysis is available outside the horizontal limits of the material classification zones shown on the plans. Per Charles Smith, Environmental Design Engineer, the location of the contractor's supports was not known prior to bid. Due to the unknowns, the contract was written to compensate the contractor for this work as extra work.

Charles Smith, Environmental Design Engineer, concurs with this change. Maintenance concurrence is not required as this work is contemplated in the contract documents.

This work is not covered by any contract items. Therefore, payment for this work will be at Extra Work at Force Account for an estimated cost of $20,000.00, which can be financed from the supplemental funds of which $500,000.00 was allotted for this work.

No adjustment of contract time is warranted by this change, as it does not affect the controlling operation.

CONCURRED BY:	
Construction Engineer: Lourdes David LD	Date 3/28/2005
Bridge Engineer:	Date
FHWA Representative:	Date
Project Engineer:	Date
Other (specify): Charles Smith, Environmental Design Engr	Date 3/28/2005
	Date
	Date
District Prior Approval By:	Date
HQ (Issue Approve) By:	Date
Resident Engineer's Signature:	Date 5/23/05

ESTIMATE OF COST

	THIS REQUEST	TOTAL TO DATE
ITEMS	$0.00	$0.00
FORCE ACCOUNT	$20,000.00	$20,000.00
AGREED PRICE	$0.00	$0.00
ADJUSTMENT	$0.00	$0.00
TOTAL	$20,000.00	$20,000.00

FEDERAL PARTICIPATION

☑ PARTICIPATING ☐ PARTICIPATING IN PART ☐ NONE
☐ NON-PARTICIPATING (MAINTENANCE) ☐ NON-PARTICIPATING

FEDERAL SEGREGATION (if more than one Funding Source or P.I.P. type)
☑ CCO FUNDED PER CONTRACT ☐ CCO FUNDED AS FOLLOWS

FEDERAL FUNDING SOURCE	PERCENT

STATE OF CALIFORNIA - DEPARTMENT OF TRANSPORTATION

CONTRACT CHANGE ORDER

Change Requested by: Engineer

CCO: 32	Suppl. No. 0	Contract No. 04 - 0120R4	Road SF-80-12.6/13.2	FED. AID LOC.: ACBRIM-080-1(097)N

To: **CC MYERS INC**

You are directed to make the following changes from the plans and specifications or do the following described work not included in the plans and specifications for this contract. ***NOTE: This change order is not effective until approved by the Engineer.***

Description of work to be done, estimate of quantities and prices to be paid. (Segregate between additional work at contract price, agreed price and force account.) Unless otherwise stated, rates for rental of equipment cover only such time as equipment is actually used and no allowance will be made for idle time. This last percentage shown is the net accumulated increase or decrease from the original quantity in the Engineer's Estimate.

Adjustment of Compensation at Lump Sum:

(1) Revision of Section 10-I .04, "Non-Storm Water Discharges - Land-Based Excavation Dewatering," of the Special Provisions such that it states that the Contractor shall dewater the excavation in conformance with the requirements of San Francisco - Public Utilities Commission (SF-PUC) Batch Discharge Permit and Authorization Letter issued on October 5, 2004, rather than San Francisco Bay Regional Water Quality Control Board (RWQCB) Order No. 01-100.

(2) Revision of Excavation and Dewatering Plan to remove existing references to the San Francisco Bay Regional Water Quality Control Board (RWQCB) Order No. 01-100 and include reference to the San Francisco - Public Utilities Commission (SF-PUC) Batch Discharge Permit and Authorization Letter issued on October 5, 2004.

For this work the contractor will be paid the agreed lump sum of $0.00. This sum constitutes full compensation, including markups, for this change.

Total cost of Adjustment of Compensation at Agreed Lump Sum Price $0.00

Estimated Cost: **Increase** ☐ **Decrease** ☐ **$0.00**

By reason of this order the time of completion will be adjusted as follows: 0 days

Submitted by

Signature	Resident Engineer: LOURDES DAVID	Date 3/10/05

Approval Recommended by

Signature	Construction Engineer: LOURDES DAVID	Date 3/10/05

Engineer Approval by

Signature	(Print name and title) LOURDES DAVID - Construction Engineer	Date 5/13/05

We the undersigned contractor, have given careful consideration to the change proposed and agree, if this proposal is approved, that we will provide all equipment, furnish the materials, except as may otherwise be noted above, and perform all services necessary for the work above specified, and will accept as full payment therefor the prices shown above.

NOTE: If you, the contractor, do not sign acceptance of this order, your attention is directed to the requirements of the specifications as to proceeding with the ordered work and filing a written protest within the time therein specified.

Contractor Acceptance by

Signature	(Print name and title)	DEWEY C. LEE, JR. Contract Administrator	Date 5/2/05

STATE OF CALIFORNIA - DEPARTMENT OF TRANSPORTATION

CONTRACT CHANGE ORDER MEMORANDUM

TO: AMER BATA / LOURDES DAVID	FILE: **E.A.** 04 - 0120R4
FROM: LOURDES DAVID	**CO-RTE-PM** SF-80-12.6/13.2
	FED. NO. ACBRIM-080-1(097)N
CCO#: **32** SUPPLEMENT#: **0** Category Code: **CCSA**	CONTINGENCY BALANCE (incl. this change): **$1,439,620.59**
COST: **$0.00** INCREASE ☐ DECREASE ☐	HEADQUARTERS APPROVAL REQUIRED? ☑ YES ☐ NO
SUPPLEMENTAL FUNDS PROVIDED: **$0.00**	IS THIS REQUEST IN ACCORDANCE WITH ENVIRONMENTAL DOCUMENTS? ☑ YES ☐ NO
CCO DESCRIPTION: SFPUC Permit Spec Change	**PROJECT DESCRIPTION:** CONSTRUCT ROUTE 80 TEMP BYPASS STRUCTURE

LOCATION: IN THE CITY AND COUNTY OF SAN FRANCISCO FROM YERBA BUENA TUNNEL TO 0.6 KM EAST OF THE YERBA BUENA TUNNEL

THIS CHANGE ORDER PROVIDES FOR:

(1) Revision of Section 10-l .04, "Non-Storm Water Discharges - Land-Based Excavation Dewatering," of the Special Provisions such that it states that the Contractor shall dewater the excavation in conformance with the requirements of San Francisco - Public Utilities Commission (SF-PUC) Batch Discharge Permit and Authorization Letter issued on October 5, 2004, rather than San Francisco Bay Regional Water Quality Control Board (RWQCB) Order No. 01-100.

(2) Revision of Excavation and Dewatering Plan to remove existing references to the San Francisco Bay Regional Water Quality Control Board (RWQCB) Order No. 01-100 and include reference to the San Francisco - Public Utilities Commission (SF-PUC) Batch Discharge Permit and Authorization Letter issued on October 5, 2004.

The Department obtained a batch discharge permit from the City and County of San Francisco for this 04-0120R4 project. The Department pursued coverage under the SF-PUC batch Discharge permit for several reasons including but not limited to:

1- It's much faster to obtain the SF-PUC permit over the RWQCB permit.
2- SF-PUC does not require EPA application forms or NOI forms.
3- Eliminates the Standard annual fees of $5,688.00 for permit renewal.
4- The effluent limitations are more generous than the RWQCB permit.
5- The reporting requirements are much less than the RWQCB permit.
6- The sampling requirements are much less than the RWQCB permit.
7- The overall risk associated with the SF-PUC permit is less because the water is pre-treated and then treated by the City and then discharged under the City's permit. (In essence it takes RWQCB review and direct oversight out of the Dewatering equation).

Charles Smith and Melissa Barrow, Environmental Engineers, Frank Gorham, SWPPP Coordinator, and Trinh Lai, Project Engineer, concur with this change. Maintenance and Design concurrence is not required, as this work is temporary and does not affect the final design. On 3/9/05 Nancy Bobb, FHWA Representative, granted FHWA Prior Approval of this change order. On 3/14/05 Ken Darby, Division of Construction CCO Engineer, granted conditional Headquarters' Issue and Approve. The condition being to obtain the Contractor's signature on the CCO. On 4/13/05 Amer Bata, Area Construction Manager - SFOBB, and Lourdes David, Construction Engineer, granted District Prior Approval of this change order.

Payment for the work of this change order will be at Adjustment of Compensation at an Agreed Lump Sum of $0.00. This price is found to be fair and reasonable because the work of revising the Excavation and Dewatering Plan will balance out against the future savings in complying with the new permit requirements.

No adjustment of contract time is warranted by this change, as it does not affect the controlling operation.

CONCURRED BY:		
Construction Engineer:	Lourdes David	Date 3/1/2005
Bridge Engineer:		Date
FHWA Representative:	Nancy Bobb	Date 3/9/2005
Project Engineer:	Trinh Lai	Date 3/3/2005
Other (specify): Frank Gorham, SWPPP Coordinator		Date 3/2/2005
Charles Smith & Melissa Barrow, Environmental Eng		Date 3/2/2005
		Date
District Prior Approval By:	Amer Bata, Area Construction Mar	Date 4/13/2005
HQ (Issue Approve) By:	Ken Darby, Division of Constructio	Date 3/14/2005
Resident Engineer's Signature:		Date 4/19/05

ESTIMATE OF COST

	THIS REQUEST	TOTAL TO DATE
ITEMS	$0.00	$0.00
FORCE ACCOUNT	$0.00	$0.00
AGREED PRICE	$0.00	$0.00
ADJUSTMENT	$0.00	$0.00
TOTAL	$0.00	$0.00

FEDERAL PARTICIPATION

☑ PARTICIPATING ☐ PARTICIPATING IN PART ☐ NONE
☐ NON-PARTICIPATING (MAINTENANCE) ☐ NON-PARTICIPATING

FEDERAL SEGREGATION (if more than one Funding Source or P.I.P. type)
☑ CCO FUNDED PER CONTRACT ☐ CCO FUNDED AS FOLLOWS

FEDERAL FUNDING SOURCE	PERCENT

CONTRACT CHANGE ORDER

Change Requested by: Engineer

CCO: 34	Suppl. No. 0	Contract No. 04 - 0120R4	Road SF-80-12.6/13.2	FED. AID LOC.: ACBRIM-080-1(097)N

To: **CC MYERS INC**

You are directed to make the following changes from the plans and specifications or do the following described work not included in the plans and specifications for this contract. ***NOTE: This change order is not effective until approved by the Engineer.***

Description of work to be done, estimate of quantities and prices to be paid. (Segregate between additional work at contract price, agreed price and force account.) Unless otherwise stated, rates for rental of equipment cover only such time as equipment is actually used and no allowance will be made for idle time. This last percentage shown is the net accumulated increase or decrease from the original quantity in the Engineer's Estimate.

Adjustment of Compensation at Lump Sum:

Amend Section 8-3.01, "Welding", of the Special Provisions as follows:

(1) In Section 8-3.01, subsection "Welding Quality Control", the second paragraph shall be changed as follows:

Unless otherwise specified, welding quality control shall apply when any work is welded in conformance with the provisions in Section 49, "Piling", Section 52, "Reinforcement", Section 55, "Steel Structures", or Section 75-1.035, "Bridge Joint Restrainer Units", of the Standard Specifications.

(2) The following subsection shall be added to Section 8-3.01, "Welding", of the Special Provisions:

[Beginning of specification addition]

WELDING FOR OVERHEAD SIGN AND POLE STRUCTURES

The Contractor shall meet the following requirements for any work welded in conformance with the provisions in Section 56-1, "Overhead Sign Structures", or Section 86 2.04, "Standards, Steel Pedestals and Posts", of the Standard Specifications.

Welding inspection personnel or Nondestructive Testing (NDT) firms to be used in the work shall not be employed or compensated by any subcontractor, or by other persons or entities hired by subcontractors, who will provide other services or materials for the project, except for when the welding is performed at a permanent fabrication or manufacturing facility which is certified under the American Institute of Steel Construction (AISC) Quality Certification Program, Category Sbd, Conventional Steel Building Structures.

Welding Qualification Audit

Contractors or subcontractors performing welding operations for overhead sign and pole structures shall not deliver materials to the project without having successfully completed the Department's "Manufacturing Qualification Audit for Overhead Sign and Pole Structures," hereinafter referred to as the audit, not more than one year prior to the delivery of the materials. The Engineer will perform the audit. Copies of the audit form, and procedures for requesting and completing the audit, are available at the Transportation Laboratory or the following website:

http://www.dot.ca.gov/hq/esc/Translab/smbresources.htm

An audit that was approved by the Engineer no more than one year prior to the beginning of work on this contract will be acceptable for the entire period of this contract, provided the Engineer determines the audit was for the same type of work that is to be performed on this contract.

Successful completion of an audit shall not relieve the Contractor of the responsibility for furnishing materials or producing finished work of the quality specified in these special provisions and as shown on the plans.

CONTRACT CHANGE ORDER

Change Requested by: Engineer

CCO: 34	Suppl. No. 0	Contract No. 04 - 0120R4	Road SF-80-12.6/13.2	FED. AID LOC.: ACBRIM-080-1(097)N

Welding Report

A daily production log for welding shall be kept for each day that welding is performed. The log shall clearly indicate the locations of all welding. The log shall include the welders' names, amount of welding performed, any problems or deficiencies discovered, and any testing or repair work performed, at each location. The daily report from each Quality Control (QC) Inspector shall also be included in the log.

A Welding Report shall be submitted to the Engineer 48 hours prior to furnishing a Certificate of Compliance for the material in conformance with the provisions in Section 6 1.07, "Certificates of Compliance", of the Standard Specifications.

The Welding Report shall include the following items:

A. Reports of all visual weld inspections and NDT.
B. Radiographs and radiographic reports, and other required NDT reports.
C. Documentation that the Contractor has evaluated all radiographs and other nondestructive tests and corrected all rejectable deficiencies, and all repaired welds have been reexamined by the required NDT and found acceptable.
D. Daily production log.

For work welded in conformance with the provisions in Section 56 1, "Overhead Sign Structures," or Section 86 2.04, "Standards, Steel Pedestals and Posts," of the Standard Specifications, a Welding Report shall be submitted in conformance with the provisions in "Welding Quality Control," of these special provisions.

[End of specification addition]

For this work the contractor will be paid the agreed lump sum of $0.00. This sum constitutes full compensation, including markups, for this change.

Estimated Cost: **Increase** ☐ **Decrease** ☐ **$0.00**

By reason of this order the time of completion will be adjusted as follows: 0 days

Submitted by

Signature	Resident Engineer: LOURDES DAVID	Date 4/13/05

Approval Recommended by

Signature	Construction Engineer: AMER BATA	Date 4/13/05

Engineer Approval by

Signature	(Print name and title) AMER BATA - Chief	Date 9/27/05

We the undersigned contractor, have given careful consideration to the change proposed and agree, if this proposal is approved, that we will provide all equipment, furnish the materials, except as may otherwise be noted above, and perform all services necessary for the work above specified, and will accept as full payment therefor the prices shown above.

NOTE: If you, the contractor, do not sign acceptance of this order, your attention is directed to the requirements of the specifications as to proceeding with the ordered work and filing a written protest within the time therein specified.

Contractor Acceptance by

Signature	(Print name and title) DEWEY C. LEE, JR. Contract Administrator	Date 9/21/05

STATE OF CALIFORNIA - DEPARTMENT OF TRANSPORTATION

CONTRACT CHANGE ORDER MEMORANDUM

TO: AMER BATA / LOURDES DAVID	FILE: **E.A.** 04 - 0120R4
FROM: LOURDES DAVID	**CO-RTE-PM** SF-80-12.6/13.2
	FED. NO. ACBRIM-080-1(097)N
CCO#: **34** SUPPLEMENT#: **0** Category Code: **CHSA**	CONTINGENCY BALANCE (incl. this change): **$1,439,620.59**
COST: **$0.00** INCREASE ☐ DECREASE ☐	HEADQUARTERS APPROVAL REQUIRED? ☑ YES ☐ NO
SUPPLEMENTAL FUNDS PROVIDED: **$0.00**	IS THIS REQUEST IN ACCORDANCE WITH ENVIRONMENTAL DOCUMENTS? ☑ YES ☐ NO
CCO DESCRIPTION: Pole Structure Welding Spec Revision	**PROJECT DESCRIPTION:** CONSTRUCT ROUTE 80 TEMP BYPASS STRUCTURE

LOCATION: IN THE CITY AND COUNTY OF SAN FRANCISCO FROM YERBA BUENA TUNNEL TO 0.6 KM EAST OF THE YERBA BUENA TUNNEL

THIS CHANGE ORDER PROVIDES FOR:
amending Section 8-3, "Welding", of the Contract Special Provisions.

The Standard Special Provisions (SSPs) that were in effect at bid time for this project have been modified by current SSPs. The Engineer has initiated a specification change order to keep the welding requirements consistent with the currently recognized welding practices of the Department. The work of this change order has not begun and the change affects only the Contractor's Welding Quality Control Program (WQCP). Though the Contractor would incur extra costs associated with a newly required extensive annual audit, these extra costs would be offset by the cost savings to the Contractor's WQCP in that the Contractor would not have to schedule and attend a pre-weld meeting nor develop and submit a project specific WQCP for approval and would only be required to submit one welding report when the material is delivered (as opposed to submitting a welding report any time welding is done on the material).

The current Standard Special Provisions, which are incorporated into this change order, were made available through the Department's specification unit. Dustin Allred, Materials Engineering and Testing Services (METS) Technician, and Rob Kobal, Headquarters' Assistant Construction Coordinator, concur with this change.

On 4/13/05 Amer Bata, Area Construction Manager - SFOBB, and Lourdes David, Construction Engineer, granted District Prior Approval of this change order. On 4/15/05 Nancy Bobb, FHWA Rep, granted FHWA Prior Approval of this change order. On 4/19/05 Ken Darby, Division of Construction Contract Change Order Engineer, granted conditional Headquarters" Issue and Approve (HQs I&A) for this change order. The conditions of the HQs I&A being noting FHWA Prior Approval on the Memo and obtaining the Contractor's signature on the change order.

Design and Maintenance concurrence is not required, as this change does not affect the final design.

Payment for the work of this change order will be at Adjustment of Compensation at an Agreed Lump Sum of $0.00, which can be financed from the contingency fund. This price is found to be fair and reasonable based on a force account analysis prepared by the Engineer. This analysis is on file.

No adjustment of contract time is warranted by this change, as it does not affect the controlling operation.

CONCURRED BY:		
Construction Engineer:	Lourdes David	Date 3/8/2005
Bridge Engineer:	Gary Lai	Date 3/3/2005
FHWA Representative:	Nancy Bobb	Date 4/15/2005
Project Engineer:		Date
Other (specify): Dustin Allred, METS Technician		Date 2/15/2005
Rob Kobal, HQs Assist Construction Coordinator		Date 4/12/2005
		Date
District Prior Approval By:	Amer Bata, Area Constr Manager -	Date 4/13/2005
HQ (Issue Approve) By:	Ken Darby, Division of Constructio	Date 4/19/2005
Resident Engineer's Signature:		Date 4/20/05

ESTIMATE OF COST

	THIS REQUEST	TOTAL TO DATE
ITEMS	$0.00	$0.00
FORCE ACCOUNT	$0.00	$0.00
AGREED PRICE	$0.00	$0.00
ADJUSTMENT	$0.00	$0.00
TOTAL	$0.00	$0.00

FEDERAL PARTICIPATION

☑ PARTICIPATING ☐ PARTICIPATING IN PART ☐ NONE
☐ NON-PARTICIPATING (MAINTENANCE) ☐ NON-PARTICIPATING

FEDERAL SEGREGATION (if more than one Funding Source or P.I.P. type)
☑ CCO FUNDED PER CONTRACT ☐ CCO FUNDED AS FOLLOWS

FEDERAL FUNDING SOURCE	PERCENT

CONTRACT CHANGE ORDER

Change Requested by: Engineer

CCO: 36	Suppl. No. 0	Contract No. 04 - 0120R4	Road SF-80-12.6/13.2	FED. AID LOC.: ACBRIM-080-1(097)N

To: **CC MYERS INC**

You are directed to make the following changes from the plans and specifications or do the following described work not included in the plans and specifications for this contract. ***NOTE: This change order is not effective until approved by the Engineer.***

Description of work to be done, estimate of quantities and prices to be paid. (Segregate between additional work at contract price, agreed price and force account.) Unless otherwise stated, rates for rental of equipment cover only such time as equipment is actually used and no allowance will be made for idle time. This last percentage shown is the net accumulated increase or decrease from the original quantity in the Engineer's Estimate.

Extra Work at Lump Sum:

Remove existing sidewalk, gutter, and retaining wall / parapet from Bent 39 to Bent 42 at the north side of the lower deck of the Bay Bridge in accordance with the detail shown on Contract Plan Sheet 113 of 193 (Sheet 3 of 3 of this Contract Change Order).

For this extra work the Contractor will be paid the sum of $ 16,734.80. This sum constitutes full compensation including markups, for furnishing all labor, materials, tools equipment and incidentals for doing all the work involved in this change.

Consideration of a time adjustment will be deferred until completion of the work specified herein. Determination of a commensurate time extension will be made in accordance with Section 8-1.07, "Liquidated Damages," of the Standard Specifications.

Estimated cost of Extra Work at Lump Sum $16,734.80

Estimated Cost: **Increase** ☑ **Decrease** ☐ **$16,734.80**

By reason of this order the time of completion will be adjusted as follows: Deferred

Submitted by

Signature	Resident Engineer: LOURDES DAVID	Date
Lourdes David		9/13/05

Approval Recommended by

Signature	Construction Engineer: LOURDES DAVID	Date
Lourdes David		9/13/05

Engineer Approval by

Signature	(Print name and title)	Date
Linda Rose	LOURDES DAVID - Construction Engineer	9/30/05

We the undersigned contractor, have given careful consideration to the change proposed and agree, if this proposal is approved, that we will provide all equipment, furnish the materials, except as may otherwise be noted above, and perform all services necessary for the work above specified, and will accept as full payment therefor the prices shown above.

NOTE: If you, the contractor, do not sign acceptance of this order, your attention is directed to the requirements of the specifications as to proceeding with the ordered work and filing a written protest within the time therein specified.

Contractor Acceptance by

Signature	(Print name and title)	Date
Dewey C Lee, Jr	DEWEY C. LEE, JR. Contract Administrator	9/22/05

STATE OF CALIFORNIA - DEPARTMENT OF TRANSPORTATION

CONTRACT CHANGE ORDER MEMORANDUM

TO: AMER BATA / LOURDES DAVID	FILE: **E.A.** 04 - 0120R4
FROM: LOURDES DAVID	**CO-RTE-PM** SF-80-12.6/13.2
	FED. NO. ACBRIM-080-1(097)N
CCO#: **36** SUPPLEMENT#: **0** Category Code: **CHPR**	CONTINGENCY BALANCE (incl. this change) **$1,137,869.90**
COST: **$16,734.80** INCREASE ☑ DECREASE ☐	HEADQUARTERS APPROVAL REQUIRED? ☐ YES ☑ NO
SUPPLEMENTAL FUNDS PROVIDED: **$0.00**	IS THIS REQUEST IN ACCORDANCE WITH ENVIRONMENTAL DOCUMENTS? ☑ YES ☐ NO
CCO DESCRIPTION: SSL A - Additional Demolition Work	**PROJECT DESCRIPTION:** CONSTRUCT ROUTE 80 TEMP BYPASS STRUCTURE

LOCATION: IN THE CITY AND COUNTY OF SAN FRANCISCO FROM YERBA BUENA TUNNEL TO 0.6 KM EAST OF THE YERBA BUENA TUNNEL

THIS CHANGE ORDER PROVIDES FOR:

removing existing sidewalk, gutter, and retaining wall / parapet from Bent 39 to Bent 42 at the north side of the lower deck of the Bay Bridge in accordance with the detail shown on Contract Plan Sheet 113 of 193 (Sheet 3 of 3 of this Contract Change Order).

This Contract requires that a temporary bypass structure (TBS) be designed and constructed by the Contractor to detour traffic on WB and EB Highway 80 between the eastern tunnel portal on Yerba Buena Island to Pier E1 on the San Francisco Oakland Bay Bridge. To divert lower deck traffic onto the TBS, an opening is created through the existing viaduct by removing some of the columns at the south side of the structure.

To facilitate the lower deck detour, new structure support walls must be constructed to maintain the integrity of the viaduct. At the north side of the structure or Structure Support Location A (SSL A), infill walls are constructed between Bents 39 through 47. In between the existing columns are gutters, short parapet / retaining walls and footings that must be removed prior to the construction of these new support walls. The work between Bents 39 to 42 was originally to be completed on the Substation Contract 04-0120G4 with the balance to be completed on the TBS contract. The Substation contract deleted this demolition work during the life of the contract but this was never updated on the TBS contract prior to bid opening. Therefore, the limits of the removal work must be extended to include locations between Bents 39 to 42 in order for the SSL A to be completed. This work will be considered as extra work.

The agreed lump sum of $ 16,734.80, provided in the contract change order, is based on a force account analysis and can be financed from the contingency balance. Records and calculations used to determine the agreed price basis are on file in the project records.

This change has been discussed with Dan T. Adams of the Office of Structure Designs, Trinh Lai of District 04 Toll Bridge Design, and Rob Kobal of Headquarters Construction and they are in agreement with this change.

Maintenance concurrence is not required as this work was anticipated by the contract documents.

Consideration of a time adjustment will be deferred pending completion of the work specified in this change order.

CONCURRED BY:		
Construction Engineer:	Lourdes David	Date4/12/2005
Bridge Engineer:	Dan Adams	Date4/12/2005
FHWA Representative:		Date
Project Engineer:	Trinh Lai	Date8/31/2005
Other (specify): Robert Kobal, HQ Asst. Construction Coordinator		Date 9/1/2005
Gary Lai, Structure Representative		Date4/12/2005
		Date
District Prior Approval By:		Date
HQ (Issue Approve) By:		Date
Resident Engineer's Signature: Lourdes David		Date 9/13/05

ESTIMATE OF COST

	THIS REQUEST	TOTAL TO DATE
ITEMS	$0.00	$0.00
FORCE ACCOUNT	$0.00	$0.00
AGREED PRICE	$16,734.80	$16,734.80
ADJUSTMENT	$0.00	$0.00
TOTAL	$16,734.80	$16,734.80

FEDERAL PARTICIPATION

☑ PARTICIPATING ☐ PARTICIPATING IN PART ☐ NONE
☐ NON-PARTICIPATING (MAINTENANCE) ☐ NON-PARTICIPATING

FEDERAL SEGREGATION (if more than one Funding Source or P.I.P. type)
☑ CCO FUNDED PER CONTRACT ☐ CCO FUNDED AS FOLLOWS

FEDERAL FUNDING SOURCE	PERCENT

STATE OF CALIFORNIA - DEPARTMENT OF TRANSPORTATION

CONTRACT CHANGE ORDER

Change Requested by: Engineer

CCO 36 Suppl. No. 1 Contract No. 04 - 0120R4 Road SF-80-12.6/13.2 FED. AID LOC.: ACBRIM-080-1(097)N

To: CC MYERS INC

You are directed to make the following changes from the plans and specifications or do the following described work not included in the plans and specifications for this contract. ***NOTE: This change order is not effective until approved by the Engineer.***

Description of work to be done, estimate of quantities and prices to be paid. (Segregate between additional work at contract price, agreed price and force account.) Unless otherwise stated, rates for rental of equipment cover only such time as equipment is actually used and no allowance will be made for idle time. This last percentage shown is the net accumulated increase or decrease from the original quantity in the Engineer's Estimate.

Extra Work at Lump Sum:

Delete Contract Change Order No. 36.

A determination of the delay in completion of the contract due to this change has been made in accordance with Section 8-1-07, "Liquidated Damages," of the Standard Specifications.

Total Cost of Extra Work at Lump Sum $0.00

Estimated Cost: Increase ☐ Decrease ☐ $0.00

By reason of this order the time of completion will be adjusted as follows: 0 days

Submitted by

Signature _____ Resident Engineer BILL CASEY Date 2-6-08

Approval Recommended by

Signature _____ Area Construction Manager DENNIS TURCHON Date 2/6/08

Engineer Approval by

Signature _____ Area Construction Manager DENNIS TURCHON Date 3/25/08

We the undersigned contractor, have given careful consideration to the change proposed and agree, if this proposal is approved, that we will provide all equipment, furnish the materials, except as may otherwise be noted above, and perform all services necessary for the work above specified, and will accept as full payment therefor the prices shown above.

NOTE: If you, the contractor, do not sign acceptance of this order, your attention is directed to the requirements of the specifications as to proceeding with the ordered work and filing a written protest within the time therein specified.

Contractor Acceptance by

Signature _____ (Print name and title) DEWEY C. LEE JR. Contract Manager Date 3/12/08

STATE OF CALIFORNIA - DEPARTMENT OF TRANSPORTATION

CONTRACT CHANGE ORDER

Change Requested by: Engineer

CCO: 37	Suppl. No. 0	Contract No. 04 - 0120R4	Road SF-80-12.6/13.2	FED. AID LOC.: ACBRIM-080-1(097)N

To: **CC MYERS INC**

You are directed to make the following changes from the plans and specifications or do the following described work not included in the plans and specifications for this contract. ***NOTE: This change order is not effective until approved by the Engineer.***

Description of work to be done, estimate of quantities and prices to be paid. (Segregate between additional work at contract price, agreed price and force account.) Unless otherwise stated, rates for rental of equipment cover only such time as equipment is actually used and no allowance will be made for idle time. This last percentage shown is the net accumulated increase or decrease from the original quantity in the Engineer's Estimate.

Extra Work at Force Account:

In accordance with Section 7-1.08, "Public Convenience", Section 7-1.09, "Public Safety", and Section 12, "Construction Area Traffic Control Devices", of the Standard Specifications and Sections 5-1.04, "Public Safety", and 10-1.29, "Maintaining Traffic", of the project Special Provisions:

The Contractor shall provide a traveled way as determined by the Engineer that is a minimum of 3.6 meters wide and 3.7 meters high, to allow for a transverse crossing of Southgate Road between Hillcrest Road and Macalla Road, within four (4) hours of the Engineer's notification. The traveled way shall allow the passage of construction equipment or vehicles of any kind, which meet the conditions set forth in Division 15 of the California Vehicle Code.

This work will be paid for in accordance with Section 5-1.24, "Force Account Payment", of the Special Provisions and Section 4-1.03D, "Extra Work", of the Standard Specifications.

Any delays to the Contractor's operations as a direct result of this traveled way installation, operation and removal shall be considered right of way delays within the meaning of Section 8-1.09, "Right of Way Delays", and compensation for the delay will be determined in conformance with the provisions in Section 8-1.09.

Estimated cost of Extra Work at Force Account $20,000.00

Extra Work at Lump Sum:

Compensate the contractor for the preparation and submittal of the above contingency plan.

For this work the contractor will be paid the agreed lump sum of $2,500.00. This sum constitutes full compensation, including markups, for this portion of the change.

Total cost of Extra Work at Agreed Lump Sum $2,500.00

Estimated Cost: **Increase** ☑ **Decrease** ☐ **$22,500.00**

By reason of this order the time of completion will be adjusted as follows: Deferred

Submitted by

Signature	Resident Engineer: LOURDES DAVID	Date 4/7/05

Approval Recommended by

Signature	Construction Engineer: LOURDES DAVID	Date 4/7/05

Engineer Approval by

Signature	(Print name and title) LOURDES DAVID - Construction Engineer	Date 5/13/05

We the undersigned contractor, have given careful consideration to the change proposed and agree, if this proposal is approved, that we will provide all equipment, furnish the materials, except as may otherwise be noted above, and perform all services necessary for the work above specified, and will accept as full payment therefor the prices shown above.

NOTE: If you, the contractor, do not sign acceptance of this order, your attention is directed to the requirements of the specifications as to proceeding with the ordered work and filing a written protest within the time therein specified.

Contractor Acceptance by

Signature	(Print name and title) DEWEY C. LEE, JR. Contract Administrator	Date 5/2/05

STATE OF CALIFORNIA - DEPARTMENT OF TRANSPORTATION

CONTRACT CHANGE ORDER MEMORANDUM

TO: AMER BATA / LOURDES DAVID	FILE: **E.A.** 04 - 0120R4
FROM: LOURDES DAVID	**CO-RTE-PM** SF-80-12.6/13.2
	FED. NO. ACBRIM-080-1(097)N
CCO#: **37** SUPPLEMENT#: **0** Category Code: **AEZZ**	CONTINGENCY BALANCE (incl. this change): **$1,397,108.14**
COST: **$22,500.00** INCREASE ☑ DECREASE ☐	HEADQUARTERS APPROVAL REQUIRED? ☐ YES ☑ NO
SUPPLEMENTAL FUNDS PROVIDED: **$0.00**	IS THIS REQUEST IN ACCORDANCE WITH ENVIRONMENTAL DOCUMENTS? ☑ YES ☐ NO
CCO DESCRIPTION: 4 hour emergency traveled way	**PROJECT DESCRIPTION:** CONSTRUCT ROUTE 80 TEMP BYPASS STRUCTURE

LOCATION: IN THE CITY AND COUNTY OF SAN FRANCISCO FROM YERBA BUENA TUNNEL TO 0.6 KM EAST OF THE YERBA BUENA TUNNEL

THIS CHANGE ORDER PROVIDES FOR:

(1) Construction of a traveled way that is a minimum 3.6 meter wide and 3.7 meter high, to allow for a transverse crossing of Southgate Road between Hillcrest Road and Macalla Road, within four (4) hours of the Engineer's direction.
(2) Compensation for the preparation and submittal of the above contingency plan.

On October 8, 2004 Trinh Lai, Project Engineer, sent a letter addressed to Lourdes David, Senior Resident Engineer, recommending this change order. The Office of Toll Bridge Design recommends this change order in order to make provisions for public access around Yerba Buena Island in case of road closures due to construction activities.

On 4/13/05 Amer Bata, Area Construction Manager - SFOBB, and Lourdes David, Construction Engineer, granted District Prior Approval of this change order. Design and Maintenance concurrence is not required as this work is temporary and will not affect the final design.

(1) This work is not covered by any contract items. Therefore, payment for this work will be at Extra Work at Force Account for an estimated total cost of $20,000.00, which can be financed from the contingency fund.

(2) Payment for providing the contingency plan will be at Extra Work at an Agreed Lump Sum of $2,500.00, which can be financed from the contingency fund. This price is found fair and reasonable based on a force account analysis submitted by the Contractor and verified by the Engineer. This analysis is on file in the project records.

Total estimated cost of this change order is $22,500.00.

Adjustment of contract time is deferred pending completion of the work specified in this change as it may affect or become the controlling operation.

CONCURRED BY:		
Construction Engineer:	Lourdes David LD	Date 3/22/2005
Bridge Engineer:		Date
FHWA Representative:		Date
Project Engineer:	Trinh Lai	Date 10/8/2004
Other (specify):		Date
		Date
		Date
District Prior Approval By:	Amer Bata, Area Construction Mar	Date 4/13/2005
HQ (Issue Approve) By:		Date
Resident Engineer's Signature:	Lourdes David	Date 4/19/05

ESTIMATE OF COST

	THIS REQUEST	TOTAL TO DATE
ITEMS	$0.00	$0.00
FORCE ACCOUNT	$20,000.00	$20,000.00
AGREED PRICE	$2,500.00	$2,500.00
ADJUSTMENT	$0.00	$0.00
TOTAL	$22,500.00	$22,500.00

FEDERAL PARTICIPATION

☑ PARTICIPATING ☐ PARTICIPATING IN PART ☐ NONE
☐ NON-PARTICIPATING (MAINTENANCE) ☐ NON-PARTICIPATING

FEDERAL SEGREGATION (if more than one Funding Source or P.I.P. type)
☑ CCO FUNDED PER CONTRACT ☐ CCO FUNDED AS FOLLOWS

FEDERAL FUNDING SOURCE	PERCENT

STATE OF CALIFORNIA - DEPARTMENT OF TRANSPORTATION

CONTRACT CHANGE ORDER

Change Requested by: Contractor

CCO: 38	Suppl. No. 0	Contract No. 04 - 0120R4	Road SF-80-12.6/13.2	FED. AID LOC.: ACBRIM-080-1(097)N

To: CC MYERS INC

You are directed to make the following changes from the plans and specifications or do the following described work not included in the plans and specifications for this contract. ***NOTE: This change order is not effective until approved by the Engineer.***

Description of work to be done, estimate of quantities and prices to be paid. (Segregate between additional work at contract price, agreed price and force account.) Unless otherwise stated, rates for rental of equipment cover only such time as equipment is actually used and no allowance will be made for idle time. This last percentage shown is the net accumulated increase or decrease from the original quantity in the Engineer's Estimate.

Adjustment of Compensation at Lump Sum:

The fourth paragraph of Design Criteria Section 8.2.1, "Support Structure Design Loads", on contract plan sheet 104 of 193 (Revised Per Addendum No. 11 dated October 06, 2003) shall be revised as follows:

"Existing Viaduct shall remain elastic under Design Evaluation Earthquake (DEE) and Displacement Limit State (DLS) demands. Vertical response shall be in accordance with Section 4 and deflection limits shown on Table 8.7.1."

This modification to Section 8.2.1 shall not relieve the Contractor of the requirements of the other design requirements within the contract plans and specifications.

For this work the contractor will be paid the agreed lump sum of $0.00. This sum constitutes full compensation, including markups, for this change. Any changes to the Contractor's design as a result of this change, or any consequences thereof are included in the full compensation, including markups, of this change.

Total cost of Adjustment of Compensation at Agreed Lump Sum Price $0.00

Estimated Cost: **Increase** ☐ **Decrease** ☐ **$0.00**

By reason of this order the time of completion will be adjusted as follows: 0 days

Submitted by

Signature	Resident Engineer: LOURDES DAVID	Date 4/27/05

Approval Recommended by

Signature	~~Construction Engineer:~~ Chief, Sup. BE AMER BATA	Date 4/27/05

Engineer Approval by

Signature	(Print name and title) AMER BATA - Chief	Date

We the undersigned contractor, have given careful consideration to the change proposed and agree, if this proposal is approved, that we will provide all equipment, furnish the materials, except as may otherwise be noted above, and perform all services necessary for the work above specified, and will accept as full payment therefor the prices shown above.

NOTE: If you, the contractor, do not sign acceptance of this order, your attention is directed to the requirements of the specifications as to proceeding with the ordered work and filing a written protest within the time therein specified.

Contractor Acceptance by

Signature	(Print name and title) DEWEY C. LEE, JR. Contract Administrator	Date 7/7/05

STATE OF CALIFORNIA - DEPARTMENT OF TRANSPORTATION

CONTRACT CHANGE ORDER MEMORANDUM

TO: AMER BATA / LOURDES DAVID	FILE: **E.A.** 04 - 0120R4
FROM: LOURDES DAVID	**CO-RTE-PM** SF-80-12.6/13.2
	FED. NO. ACBRIM-080-1(097)N
CCO#: **38** SUPPLEMENT#: **0** Category Code: **CHSX**	CONTINGENCY BALANCE (incl. this change): **$1,393,063.79**
COST: **$0.00** INCREASE ☐ DECREASE ☐	HEADQUARTERS APPROVAL REQUIRED? ☑ YES ☐ NO
SUPPLEMENTAL FUNDS PROVIDED: **$0.00**	IS THIS REQUEST IN ACCORDANCE WITH ENVIRONMENTAL DOCUMENTS? ☑ YES ☐ NO
CCO DESCRIPTION: Revise West Tie-In Design Criteria	**PROJECT DESCRIPTION:** CONSTRUCT ROUTE 80 TEMP BYPASS STRUCTURE

LOCATION: IN THE CITY AND COUNTY OF SAN FRANCISCO FROM YERBA BUENA TUNNEL TO 0.6 KM EAST OF THE YERBA BUENA TUNNEL

THIS CHANGE ORDER PROVIDES FOR:

Modification of the fourth paragraph of Design Criteria Section 8.2.1, "Support Structure Design Loads", on contract plan sheet 104 of 193 such that the requirements for target fundamental period no longer apply and that the existing structure remain elastic under Design Evaluation Earthquake (DEE) and Displacement Limit State (DLS) demands.

The Contractor requested this change in a letter dated January 12, 2005 addressed to Lourdes David, Resident Engineer. In this letter the Contractor further stated, "There will be no additional cost or savings to the State by reason of this change."

This Contract requires that a Temporary Bypass Structure (TBS) be designed and constructed by the Contractor to detour traffic on WB and EB Highway 80 between the eastern tunnel portal on Yerba Buena Island to Pier E1 on the San Francisco Oakland Bay Bridge. The contract plans and specifications provide the necessary alignments and criteria by which the design is to be developed, but leaves the detailed engineering design of the structure to the Contractor.

The original intent of Article 8.2.1 of the design criteria was to protect the existing viaduct from sustaining damage resulting from movement of the new structure during the design seismic event by establishing a target fundamental period for the new structure at 0.55 ± 0.05 sec. This limits the spectral acceleration as determined by Figure 4.1.2A of the Design Criteria to a value between 0.25 and 0.40g. The spectral acceleration values factor into the calculated load transmitted through to the existing structure.

The Contractor has demonstrated that the target period can be changed and results in a lower load applied to the existing structure during seismic event. By allowing for the design of a structure with a higher fundamental period that yields a lower spectral acceleration value, the loads applied to the existing structure can be significantly lowered. This is a substantial benefit to the Department designed retrofit elements of the existing structure. The Contractor's current design possesses an approximate period of 1 sec that roughly correlates to a spectral acceleration value between 0.1-0.2g. The Contractor's calculations further show that the existing structure will remain elastic during both the DEE and DLS events.

Dan Adams, Structures Design Engineer, Trinh Lai, Project Engineer, and Robert Kobal, Headquarters' Assistant Construction Coordinator, concur with this change. On 4/27/2005 Amer Bata, Area Construction Manager - SFOBB, and Lourdes David, Construction Engineer, granted District Prior Approval of this change order. On 5/2/2005 Nancy Bobb, FHWA Representative, granted FHWA Prior Approval of this change order. On 5/12/2005 Ken Darby, Division of Construction CCO Engineer, granted conditional Headquarters' Issue and Approval of this change order. The HQs I&A is conditional on obtaining the Contractor's signature on the change order.

Maintenance concurrence is not required, as this work does not affect the maintenance of the structure.

Payment for the work of this change order will be at Adjustment of Compensation at an Agreed Lump Sum of $0.00. This price is found to be fair and reasonable because the work of this change order has not begun and the change affects only design parameters. Quantities, equipment and manpower are not affected. Any changes to the contractors design as a result of this change, or any consequences thereof, are included in the full compensation, including markups, of this change.

No adjustment of contract time is warranted by this change, as it does not affect the controlling operation.

CONTRACT CHANGE ORDER MEMORANDUM

CONCURRED BY:		
Construction Engineer:	Lourdes David	Date 4/20/2005
Bridge Engineer:	Gary Lai	Date 4/20/2005
FHWA Representative:	Nancy Bobb	Date 5/2/2005
Project Engineer:	Trinh Lai	Date 4/20/2005
Other (specify): Dan Adams, Structures Design Engineer		Date 4/20/2005
Robert Kobal, HQs Assist Construction Coordinator		Date 4/21/2005
		Date
District Prior Approval By:	Amer Bata, Area Construction Man	Date 4/27/2005
HQ (Issue Approve) By:	Ken Darby, Division of Constructio	Date 5/12/2005
Resident Engineer's Signature:		Date 5/13/05

ESTIMATE OF COST

	THIS REQUEST	TOTAL TO DATE
ITEMS	$0.00	$0.00
FORCE ACCOUNT	$0.00	$0.00
AGREED PRICE	$0.00	$0.00
ADJUSTMENT	$0.00	$0.00
TOTAL	$0.00	$0.00

FEDERAL PARTICIPATION

☑ PARTICIPATING ☐ PARTICIPATING IN PART ☐ NONE
☐ NON-PARTICIPATING (MAINTENANCE) ☐ NON-PARTICIPATING

FEDERAL SEGREGATION (if more than one Funding Source or P.I.P. type)
☑ CCO FUNDED PER CONTRACT ☐ CCO FUNDED AS FOLLOWS

FEDERAL FUNDING SOURCE	PERCENT

STATE OF CALIFORNIA - DEPARTMENT OF TRANSPORTATION

CONTRACT CHANGE ORDER

Change Requested by: Engineer

CCO: 39	Suppl. No. 0	Contract No. 04 - 0120R4	Road SF-80-12.6/13.2	FED. AID LOC.: ACBRIM-080-1(097)N

To: **CC MYERS INC**

You are directed to make the following changes from the plans and specifications or do the following described work not included in the plans and specifications for this contract. ***NOTE: This change order is not effective until approved by the Engineer.***

Description of work to be done, estimate of quantities and prices to be paid. (Segregate between additional work at contract price, agreed price and force account.) Unless otherwise stated, rates for rental of equipment cover only such time as equipment is actually used and no allowance will be made for idle time. This last percentage shown is the net accumulated increase or decrease from the original quantity in the Engineer's Estimate.

Extra Work at Force Account:

Provide shuttle service for United States Coast Guard (USCG) personnel from Treasure Island to the USCG facility when determined by the Engineer.

Estimated cost of Extra Work at Force Account $10,000.00

Estimated Cost: **Increase** ☑ **Decrease** ☐ **$10,000.00**

By reason of this order the time of completion will be adjusted as follows: 0 days

Submitted by

Signature	Lourdes David	Resident Engineer: LOURDES DAVID	Date 5/31/05

Approval Recommended by

Signature	Lourdes David	Construction Engineer: LOURDES DAVID	Date 5/31/05

Engineer Approval by

Signature	for LDavid	(Print name and title) LOURDES DAVID - Construction Engineer	Date 15 June 2005

We the undersigned contractor, have given careful consideration to the change proposed and agree, if this proposal is approved, that we will provide all equipment, furnish the materials, except as may otherwise be noted above, and perform all services necessary for the work above specified, and will accept as full payment therefor the prices shown above.

NOTE: If you, the contractor, do not sign acceptance of this order, your attention is directed to the requirements of the specifications as to proceeding with the ordered work and filing a written protest within the time therein specified.

Contractor Acceptance by

Signature	Dewey C Lee Jr	(Print name and title) DEWEY C. LEE, JR. Contract Administrator	Date 6/9/05

STATE OF CALIFORNIA - DEPARTMENT OF TRANSPORTATION

CONTRACT CHANGE ORDER MEMORANDUM

TO: AMER BATA / LOURDES DAVID	FILE: **E.A.** 04 - 0120R4
	CO-RTE-PM SF-80-12.6/13.2
FROM: LOURDES DAVID	**FED. NO.** ACBRIM-080-1(097)N
CCO#: **39** SUPPLEMENT#: **0** Category Code: **CGAX**	CONTINGENCY BALANCE (incl. this change): **$1,383,063.79**
COST: **$10,000.00** INCREASE ☑ DECREASE ☐	HEADQUARTERS APPROVAL REQUIRED? ☐ YES ☑ NO
SUPPLEMENTAL FUNDS PROVIDED: **$0.00**	IS THIS REQUEST IN ACCORDANCE WITH ENVIRONMENTAL DOCUMENTS? ☑ YES ☐ NO
CCO DESCRIPTION: Provide shuttle service for USCG	**PROJECT DESCRIPTION:** CONSTRUCT ROUTE 80 TEMP BYPASS STRUCTURE

LOCATION: IN THE CITY AND COUNTY OF SAN FRANCISCO FROM YERBA BUENA TUNNEL TO 0.6 KM EAST OF THE YERBA BUENA TUNNEL

THIS CHANGE ORDER PROVIDES FOR:

compensation for providing shuttle service for United States Coast Guard (USCG) personnel from Treasure Island to the USCG facility when determined by the Engineer.

This change order is being issued in accordance with Special Provisions Section "5-1.35, "Relations with the Untied States Coast Guard", which states: "This project is located in San Francisco Bay at Yerba Buena Island, adjacent to a navigable channel, which is under the jurisdiction of the United States Coast Guard (USCG), Eleventh District, Coast Guard Island, Alameda, California, 94501-5100. A USCG Bridge Permit has been issued covering work to be performed under this contract."

In a Memo dated 5/23/05 sent by Trinh Lai, Project Engineer, to Lourdes David, Resident Engineer (RE), the Office of Toll Bridge Design recommended a change order be written to provide shuttle service for USCG personnel from Treasure Island to the USCG Facility for the dates of June 8th and July 15th, 2005. Due to the limited parking area as a result of construction activities on the Temporary Bypass Structure and in conformance with the Memorandum Of Agreement (MOA) between the USCG and the State of California, Department of Transportation dated June 2002; the State should pay for the shuttle service. Section 4b(9) of the referenced MOA states: "Caltrans understands that vehicle parking on the COAST GUARD facility is constrained and will take all reasonable measures to ensure, without cost to the COAST GUARD, that any areas available for parking during the duration of the PROJECT will be made accessible for vehicles." The State feels this CCO is a reasonable measure to uphold the State's end of the agreement.

It is possible that due to future construction activities this shuttle service may be required on future dates as well as the dates of June 8th and July 15th, 2005. Therefore this CCO is being written to also allow for future dates as determined by the Engineer.

Mark Shindler, Right of Way Chief, concurs with this change order. On 6/2/2005 Amer Bata, Area Construction Manager - SFOBB, and Lourdes David, Construction Engineer, granted District Prior Approval of this change order. Design and Maintenance concurrence is not required, as this work will not affect the final design.

This work is not covered by any contract items. Therefore, payment for this work will be at Extra Work at Force Account for an estimated cost of $10,000.00, which can be financed from the contingency funds.

No adjustment of contract time is warranted by this change, as it does not affect the controlling operation.

CONTRACT CHANGE ORDER MEMORANDUM

CONCURRED BY:		
Construction Engineer:	Lourdes David	Date 5/23/2005
Bridge Engineer:		Date
FHWA Representative:		Date
Project Engineer:	Trinh Lai	Date 5/23/2005
Other (specify): Mark Shindler, CT Right of Way Chief		Date 5/23/2005
		Date
		Date
District Prior Approval By:	Amer Bata, Area Construction Man	Date 6/2/2005
HQ (Issue Approve) By:		Date
sident Engineer's Signature:		Date 6/2/05

ESTIMATE OF COST		
	THIS REQUEST	TOTAL TO DATE
ITEMS	$0.00	$0.00
FORCE ACCOUNT	$10,000.00	$10,000.00
AGREED PRICE	$0.00	$0.00
ADJUSTMENT	$0.00	$0.00
TOTAL	$10,000.00	$10,000.00

FEDERAL PARTICIPATION

☑ PARTICIPATING ☐ PARTICIPATING IN PART ☐ NONE
☐ NON-PARTICIPATING (MAINTENANCE) ☐ NON-PARTICIPATING

FEDERAL SEGREGATION (if more than one Funding Source or P.I.P. type)
☑ CCO FUNDED PER CONTRACT ☐ CCO FUNDED AS FOLLOWS

FEDERAL FUNDING SOURCE	PERCENT

DEPARTMENT OF TRANSPORTATION – District 4 Toll Bridge Program
325 Burma Rd.
Oakland, CA 94607
Telephone (510) 622-4200 Fax (510) 622-4266

LETTER OF TRANSMITTAL

To: CC MYERS INC
3286 FITZGERALD ROAD
RANCHO CORDOVA CA 95741

Attn: Bob Coupe

Date: 30-Mar-2009

Contract No: 04-0120R4
04-SF-80-12.6-13.2

Job Name: South – South Detour

Transmittal No.: 05.03.02-001430

Subject : Approved Contract Change Order No. 39 - Supplemental No. 1

Enclosed please find the following items:

[ ]	Shop Drawings	[X]	Change Order	[ ]	Submittal(s)
[ ]	WSWD Report(s)	[ ]	Plans	[ ]	Other
[ ]	Daily Extra Work Reports	[ ]	Progress Payment		
[ ]	RFI Responses	[ ]	Dept. Letter		

Item	Date	Copies	Sheets	Description
1	30-Mar-2009	1	1	Approved Contract Change Order No. 39 - Supplemental No. 1

These Are Transmitted As Checked Below:

[ ]	For Approval or Action	[ ]	Approved as Submitted	[ ]	Resubmit	___	Copies for approval
[X]	For Your Use	[X]	Approved as Noted	[ ]	Submit	___	Copies for distribution
[ ]	As Requested	[ ]	Returned for Corrections	[ ]	Return	___	Corrected prints
[ ]	For Review & Comment	[ ]	Other	[ ]	Sign and Return		

Remarks:

Signed: Andrew Yan

Copy To:
File: 05.03.02, 49.39S1.01

STATE OF CALIFORNIA - DEPARTMENT OF TRANSPORTATION

CONTRACT CHANGE ORDER

Change Requested by: Engineer

CCO 39	Suppl. No. 1	Contract No. 04 - 0120R4	Road SF-80-12.6/13.2	FED. AID LOC.: ACBRIM-080-1(097)N

To: **CC MYERS INC**

You are directed to make the following changes from the plans and specifications or do the following described work not included in the plans and specifications for this contract. ***NOTE: This change order is not effective until approved by the Engineer.***

Description of work to be done, estimate of quantities and prices to be paid. (Segregate between additional work at contract price, agreed price and force account.) Unless otherwise stated, rates for rental of equipment cover only such time as equipment is actually used and no allowance will be made for idle time. This last percentage shown is the net accumulated increase or decrease from the original quantity in the Engineer's Estimate.

Extra Work at Force Account:

Provide additional funds.

As authorized by the Engineer and in accordance with Section 10-1.135, "Temporary Shuttle Van Service" of the Contract Special Provisions, provide temporary shuttle van service for transporting United States Coast Guard personnel to the USCG home base and Yerba Buena Island.

Compensation for this work will be paid for as extra work as provided for in Section 5-1.24 "Force Account Payment" of the Special Provisions, and Section 4-1.03D "Extra Work" of the Standard Specifications.

Estimated Cost of Extra Work at Force Account $500,000.00

Estimated Cost: Increase ☑ Decrease ☐ **$500,000.00**

By reason of this order the time of completion will be adjusted as follows: 0 days

Submitted by		
Signature [signature]	**Resident Engineer** BILL CASEY	**Date** 3-13-09
Approval Recommended by		
Signature Deanna Vilcheck	**Area Construction Manager** DEANNA VILCHECK	**Date** 3/17/09
Engineer Approval by		
Signature Deanna Vilcheck	**Area Construction Manager** DEANNA VILCHECK	**Date** 3/18/09

We the undersigned contractor, have given careful consideration to the change proposed and agree, if this proposal is approved, that we will provide all equipment, furnish the materials, except as may otherwise be noted above, and perform all services necessary for the work above specified, and will accept as full payment therefor the prices shown above.

NOTE: If you, the contractor, do not sign acceptance of this order, your attention is directed to the requirements of the specifications as to proceeding with the ordered work and filing a written protest within the time therein specified.

Contractor Acceptance by		
Signature NOT APPLICABLE	**(Print name and title)** N/A	**Date** N/A

STATE OF CALIFORNIA - DEPARTMENT OF TRANSPORTATION

CONTRACT CHANGE ORDER

Change Requested by: Engineer

CCO: 39	Suppl. No. 2	Contract No. 04 - 0120R4	Road SF-80-12.6/13.2	FED. AID LOC.:

To: **CC MYERS INC**

You are directed to make the following changes from the plans and specifications or do the following described work not included in the plans and specifications for this contract. ***NOTE: This change order is not effective until approved by the Engineer.***

Description of work to be done, estimate of quantities and prices to be paid. (Segregate between additional work at contract price, agreed price and force account.) Unless otherwise stated, rates for rental of equipment cover only such time as equipment is actually used and no allowance will be made for idle time. This last percentage shown is the net accumulated increase or decrease from the original quantity in the Engineer's Estimate.

Extra Work at Force Account:

Provide additional funds for the work specified under Change Order No. 39, Supplement No. 1.

Estimated cost of Extra Work at Force Account $200,000.00

RECEIVED
011626 MAR 16

Estimated Cost: Increase ☑ Decrease ☐ **$200,000.00**

By reason of this order the time of completion will be adjusted as follows: 0 days

Submitted by

Signature Deanna Vilcheck	Resident Engineer BILL CASEY	Date 2/11/10

Approval Recommended by

Signature Deanna Vilcheck	Area Construction Manager DEANNA VILCHECK	Date 2/11/10

Engineer Approval by

Signature Peter S. Siguenthal for	Area Construction Manager DEANNA VILCHECK	Date 2/18/10

We the undersigned contractor, have given careful consideration to the change proposed and agree, if this proposal is approved, that we will provide all equipment, furnish the materials, except as may otherwise be noted above, and perform all services necessary for the work above specified, and will accept as full payment therefor the prices shown above.

NOTE: If you, the contractor, do not sign acceptance of this order, your attention is directed to the requirements of the specifications as to proceeding with the ordered work and filing a written protest within the time therein specified.

Contractor Acceptance by

Signature N/A	(Print name and title)	Date

STATE OF CALIFORNIA - DEPARTMENT OF TRANSPORTATION

CONTRACT CHANGE ORDER MEMORANDUM

TO: MIKE FORNER / DEANNA VILCHECK	FILE: **E.A.** 04 - 0120R4
FROM: BILL CASEY	**CO-RTE-PM** SF-80-12.6/13.2
	FED. NO.
CCO#: **39** SUPPLEMENT#: **2** Category Code: **CGAX**	CONTINGENCY BALANCE (incl. this change) **$41,597,712.59**
COST: **$200,000.00** INCREASE ☑ DECREASE ☐	HEADQUARTERS APPROVAL REQUIRED? ☑ YES ☐ NO
SUPPLEMENTAL FUNDS PROVIDED: **$0.00**	IS THIS REQUEST IN ACCORDANCE WITH ENVIRONMENTAL DOCUMENTS? ☑ YES ☐ NO
CCO DESCRIPTION: USCG Oakland to YBI Shuttle	**PROJECT DESCRIPTION:** CONSTRUCT ROUTE 80 TEMP BYPASS STRUCTURE

Original Contract Time:	Time Adj. This Change:	Previously Approved CCO Time Adjustments:	Percentage Time Adjusted: (including this change)	Total # of Unreconciled Deferred Time CCO(s): (including this change)
475 Day(s)	**0** Day(s)	**1660** Day(s)	**349** %	**0**

THIS CHANGE ORDER PROVIDES FOR:

Additional funding for temporary shuttle van service for transporting US Coast Guard personnel from their home base to Yerba Buena Island.

This project was awarded in March 2004 to construct a detour that will allow for the tie in of the new east span of the San Francisco Oakland Bay Bridge to Yerba Buena Island. The detour encompasses three main structures, the East Tie-In (ETI) to the existing bridge, the West Tie-In (WTI) to Yerba Buena Island and the Viaduct structure between the two tie ins. The contract was issued as a performance based contract with the contractor responsible for providing the design of the structure based on specified design criteria.

Two separate Department strategy memorandums, dated December 14, 2006 and December 25, 2006 and both approved by Tony Anziano – Toll Bridge Program Manager, Richard land – Chief Engineer and subsequently by the Toll Bridge Program Oversight Committee (TBPOC), recommended that the Department assume the design responsibility for the ETI and WTI structures and recommended the advance construction of foundation work for the Yerba Buena Island Transition Structure (YBITS) to be added to this contract. The implementation of these strategies has led to the extension of the contract through the end of 2010 approximately 5 years past the original contract completion date.

Change Order No. 39, Supplement No. 1 provided for the transport of US Coast Guard personnel to and from their station at Yerba Buena Island to their offices in Oakland, CA and Alameda, CA. The offices are located several miles from the YBI station and the shuttle service helps to mitigate Department impacts to the Coast Guard due to the 5 year extension of this contract and the significant increase in work. The only access to the YBI station runs directly through this contract's work site and traffic disruptions occur on a daily basis.

The scope of work has recently been reduced concerning this change order however, existing funding will not be adequate to provide for this work through the end of the contract. It is estimated an additional $200,000.00 will be required to fund this work.

The work shall be performed as extra work at force account at an estimated cost of $200,000 and shall be financed from the contract's contingency funds. A cost analysis is on file.

No adjustment of contract time is warranted as the work will not affect the controlling operation.

Maintenance concurrence is not required as this change order does not affect any permanent roadway features.

ADA Notice: For individuals with sensory disabilities, this document is available in alternate formats. For information call: (916) 654-6410 or TDD (916) 654-3880 or write Records and Forms Management, 1120 N Street, MS-89, Sacramento, CA 95814.

CONCURRED BY:		
Construction Engineer:	for Bill Casey, Resident Engineer	Date 2/11/10
Bridge Engineer:		Date
Project Engineer:	Minh B. Nguyen, PE	Date 2/11/10
Project Manager:	Alec Melkonians	Date 2/10/10
FHWA Rep.:		Date
Environmental:		Date
Other (specify):	Jeannie Balderramos	Date 2-10-10
Other (specify):		Date
District Prior Approval By:		Date
HQ (Issue Approve) By:	Larry Salhaney, HQ CCO Engine	Date 2/16/10
Resident Engineer's Signature:	Deanna Viechec for Bill Casey	Date 2/11/10

ESTIMATE OF COST		
	THIS REQUEST	TOTAL TO DATE
ITEMS	$0.00	$0.00
FORCE ACCOUNT	$200,000.00	$710,000.00
AGREED PRICE	$0.00	$0.00
ADJUSTMENT	$0.00	$0.00
TOTAL	$200,000.00	$710,000.00

FEDERAL PARTICIPATION

☐ PARTICIPATING ☐ PARTICIPATING IN PART ☑ NONE
☐ NON-PARTICIPATING (MAINTENANCE) ☐ NON-PARTICIPATING

FEDERAL SEGREGATION (if more than one Funding Source or P.I.P. type)
☐ CCO FUNDED PER CONTRACT ☐ CCO FUNDED AS FOLLOWS

FEDERAL FUNDING SOURCE	PERCENT

ADA Notice: For individuals with sensory disabilities, this document is available in alternate formats. For information call: (916) 654-6410 or TDD (916) 654-3880 or write Records and Forms Management, 1120 N Street, MS-89, Sacramento, CA 95814.

CONTRACT CHANGE ORDER

Change Requested by: Engineer

CCO: 40	Suppl. No. 0	Contract No. 04 - 0120R4	Road SF-80-12.6/13.2	FED. AID LOC.: ACBRIM-080-1(097)N

To: **CC MYERS INC**

You are directed to make the following changes from the plans and specifications or do the following described work not included in the plans and specifications for this contract. ***NOTE: This change order is not effective until approved by the Engineer.***

Description of work to be done, estimate of quantities and prices to be paid. (Segregate between additional work at contract price, agreed price and force account.) Unless otherwise stated, rates for rental of equipment cover only such time as equipment is actually used and no allowance will be made for idle time. This last percentage shown is the net accumulated increase or decrease from the original quantity in the Engineer's Estimate.

Extra Work at Lump Sum:

Provide compensation for sewer pipe material change to install ductile iron pipe (DIP) in lieu of PVC for the sewer force main at Bent 52.

For this work the contractor will be paid the agreed lump sum of $1,561.95. This sum constitutes full compensation, including markups, for this change.

Estimated cost of Extra Work at Lump Sum $1,561.95

Estimated Cost: **Increase** ☑ **Decrease** ☐ **$1,561.95**

By reason of this order the time of completion will be adjusted as follows: 0 days

Submitted by

Signature	Resident Engineer: LOURDES DAVID	Date 9/16/05

Approval Recommended by

Signature	Construction Engineer: LOURDES DAVID	Date 9/16/05

Engineer Approval by

Signature	(Print name and title) LOURDES DAVID - Construction Engineer	Date 9/26/05

We the undersigned contractor, have given careful consideration to the change proposed and agree, if this proposal is approved, that we will provide all equipment, furnish the materials, except as may otherwise be noted above, and perform all services necessary for the work above specified, and will accept as full payment therefor the prices shown above.

NOTE: If you, the contractor, do not sign acceptance of this order, your attention is directed to the requirements of the specifications as to proceeding with the ordered work and filing a written protest within the time therein specified.

Contractor Acceptance by

Signature	(Print name and title) DEWEY C. LEE, JR. Contract Administrator	Date 9/21/05

STATE OF CALIFORNIA - DEPARTMENT OF TRANSPORTATION

CONTRACT CHANGE ORDER MEMORANDUM

DATE: 9/2/2005 Page 1 of 1

TO: AMER BATA / LOURDES DAVID	FILE: **E.A.** 04 - 0120R4
FROM: LOURDES DAVID	**CO-RTE-PM** SF-80-12.6/13.2
	FED. NO. ACBRIM-080-1(097)N
CCO#: **40** SUPPLEMENT#: **0** Category Code: **AHZZ**	CONTINGENCY BALANCE (incl. this change) **($3,598,176.22)**
COST: **$1,561.95** INCREASE ☑ DECREASE ☐	HEADQUARTERS APPROVAL REQUIRED? ☐ YES ☑ NO
SUPPLEMENTAL FUNDS PROVIDED: **$0.00**	IS THIS REQUEST IN ACCORDANCE WITH ENVIRONMENTAL DOCUMENTS? ☑ YES ☐ NO
CCO DESCRIPTION: Sewer Pipe Material Change	**PROJECT DESCRIPTION:** CONSTRUCT ROUTE 80 TEMP BYPASS STRUCTURE

LOCATION: IN THE CITY AND COUNTY OF SAN FRANCISCO FROM YERBA BUENA TUNNEL TO 0.6 KM EAST OF THE YERBA BUENA TUNNEL

THIS CHANGE ORDER PROVIDES FOR:

compensation for sewer pipe material change to install ductile iron pipe (DIP) in lieu of PVC for the sewer force main at Bent 52.

At Bent 52, a sewer force main was in conflict with a proposed new footing of the Temporary Bypass Structure (TBS), and had to be relocated. The contract plans show this utility as made of PVC pipe. However, during utility potholing work at Bent 52, the Contractor determined that the sewer force main to be relocated was ductile iron pipe (DIP), not PVC as shown on the plans. The decision was made to use DIP to maintain consistency of material for the new section of pipe. This change order provides the compensation for this work as DIP is more expensive than PVC.

Design and Maintenance concurrence is not required, as this change order does not change the design details.

Payment for the work of this change order will be at Extra Work at an Agreed Lump Sum for $1,561.95. This price is found to be fair and reasonable based on a force account analysis submitted by the Contractor and verified by the Engineer. This sum is the difference in cost between the use of DIP and PVC material. This analysis is on file.

No adjustment of contract time is warranted by this change, as it does not affect the controlling operation.

CONCURRED BY:	
Construction Engineer: LOURDES DAVID	Date 9/6/05
Bridge Engineer:	Date
FHWA Representative:	Date
Project Engineer:	Date
Other (specify):	Date
	Date
	Date
District Prior Approval By:	Date
HQ (Issue Approve) By:	Date
Resident Engineer's Signature:	Date 9/6/05

ESTIMATE OF COST

	THIS REQUEST	TOTAL TO DATE
ITEMS	$0.00	$0.00
FORCE ACCOUNT	$0.00	$0.00
AGREED PRICE	$1,561.95	$1,561.95
ADJUSTMENT	$0.00	$0.00
TOTAL	$1,561.95	$1,561.95

FEDERAL PARTICIPATION

☑ PARTICIPATING ☐ PARTICIPATING IN PART ☐ NONE
☐ NON-PARTICIPATING (MAINTENANCE) ☐ NON-PARTICIPATING

FEDERAL SEGREGATION (if more than one Funding Source or P.I.P. type)
☑ CCO FUNDED PER CONTRACT ☐ CCO FUNDED AS FOLLOWS

FEDERAL FUNDING SOURCE	PERCENT

STATE OF CALIFORNIA - DEPARTMENT OF TRANSPORTATION

CONTRACT CHANGE ORDER

Change Requested by: Engineer

CCO: 42	Suppl. No. 0	Contract No. 04 - 0120R4	Road SF-80-12.6/13.2	FED. AID LOC.: ACBRIM-080-1(097)N

To: **CC MYERS INC**

You are directed to make the following changes from the plans and specifications or do the following described work not included in the plans and specifications for this contract. ***NOTE: This change order is not effective until approved by the Engineer.***

Description of work to be done, estimate of quantities and prices to be paid. (Segregate between additional work at contract price, agreed price and force account.) Unless otherwise stated, rates for rental of equipment cover only such time as equipment is actually used and no allowance will be made for idle time. This last percentage shown is the net accumulated increase or decrease from the original quantity in the Engineer's Estimate.

Extra Work at Force Account:

Prepare three piles for a pile load test at Bent 48 Right footing in accordance with Sheet 2 of this change order.

Provide support to the State's Engineer to setup and remove the pile load test equipment by furnishing labor, materials, tools, equipment, and incidentals as required to assist the Engineer in the installation, operation and removal of State-furnished steel load test beams, State-furnished jacks, bearing plates, drills, and other test equipment. This will include supplying a crane capable of lifting a six (6) meter long test beam weighing 7,711.0 kilograms.

Estimated cost of Extra Work at Force Account $20,000.00

Estimated Cost: **Increase** ☑ **Decrease** ☐ **$20,000.00**

By reason of this order the time of completion will be adjusted as follows: 0 days

Submitted by

Signature	Resident Engineer: LOURDES DAVID	Date 8/11/05

Approval Recommended by

Signature	Construction Engineer: LOURDES DAVID	Date 8/11/05

Engineer Approval by

Signature	(Print name and title) LOURDES DAVID - Construction Engineer	Date

We the undersigned contractor, have given careful consideration to the change proposed and agree, if this proposal is approved, that we will provide all equipment, furnish the materials, except as may otherwise be noted above, and perform all services necessary for the work above specified, and will accept as full payment therefor the prices shown above.

NOTE: If you, the contractor, do not sign acceptance of this order, your attention is directed to the requirements of the specifications as to proceeding with the ordered work and filing a written protest within the time therein specified.

Contractor Acceptance by

Signature	(Print name and title) DEWEY C. LEE, JR. Contract Administrator	Date 8/16/05

STATE OF CALIFORNIA - DEPARTMENT OF TRANSPORTATION

CONTRACT CHANGE ORDER MEMORANDUM

DATE: 8/11/2005

TO: AMER BATA / LOURDES DAVID	FILE: **E.A.** 04 - 0120R4
	CO-RTE-PM SF-80-12.6/13.2
FROM: LOURDES DAVID	**FED. NO.** ACBRIM-080-1(097)N
CCO#: **42** SUPPLEMENT#: **0** Category Code: **CHXX**	CONTINGENCY BALANCE (incl. this change): **$1,263,063.79**
COST: **$20,000.00** INCREASE ☑ DECREASE ☐	HEADQUARTERS APPROVAL REQUIRED? ☐ YES ☑ NO
SUPPLEMENTAL FUNDS PROVIDED: **$0.00**	IS THIS REQUEST IN ACCORDANCE WITH ENVIRONMENTAL DOCUMENTS? ☑ YES ☐ NO
CCO DESCRIPTION: Bent 48R Pile Load Test	**PROJECT DESCRIPTION:** CONSTRUCT ROUTE 80 TEMP BYPASS STRUCTURE

LOCATION: IN THE CITY AND COUNTY OF SAN FRANCISCO FROM YERBA BUENA TUNNEL TO 0.6 KM EAST OF THE YERBA BUENA TUNNEL

THIS CHANGE ORDER PROVIDES FOR:

(1) Preparing three piles for a pile load test at Bent 48 Right footing in accordance with Sheet 2 of the change order.
(2) Providing support to the State's Engineer to setup and remove the pile load test equipment.

This Contract requires that a Temporary Bypass Structure (TBS) be designed and constructed by the Contractor to detour traffic on WB and EB Highway 80 between the eastern tunnel portal on Yerba Buena Island to Pier E1 on the San Francisco Oakland Bay Bridge.

On the West Tie-In segment, the Bent 48 footing is founded upon 600 mm driven steel shell piling. The pile demands for uplift at Bent 48 were calculated to be 300 kips per pile; therefore, the piles were tipped to obtain a nominal resistance (tension) to meet or exceed 300 kips per pile. However, several of the piles met refusal during installation and did not obtain the required embedment required for tension.

Additional PDA testing was performed on two piles at this location and resulted in a report generated by the Contractor's Geotechnical Engineer that accepted the piles as driven; however, the State Geotechnical staff is not in agreement with this decision. Since the piles are the only components of the foundation that will resist the tension demands, it is vital that the nominal resistance (tension) be obtained.

In a letter dated 8/8/05 Dan Adams, Bridge Design Engineer, requested that a static pile load test be conducted to verify the nominal resistance (tension) for theses piles. Therefore the State will be performing a pile load test to verify that the reported pile capacity of 300 kips in uplift can be obtained in the field. Should this value not be obtained, the Contractor will be required to re-evaluate or re-design the footing.

This work was not originally contemplated by the contract. It is being performed as additional Quality Assurance by the State to ensure public safety. This change order provides for compensation to the Contractor for preparing the pile heads and for supporting the State's Foundation Testing group in setting up and then removing the State testing equipment.

Trinh Lai, Project Engineer, and Robert Kobal, Caltrans' Headquarters' Assistant Construction Coordinator, concur with this change. On 8/8/05 Rick Morrow, Area Construction Manager - SFOBB, and Lourdes David, Construction Engineer, granted District Prior Approval of this change order. Maintenance concurrence is not required as this work is temporary and does not affect the final design.

This work will be performed under Extra Work at Force Account for an estimated cost of $20,000.00, which can be financed from the contingency funds.

No adjustment of the contract time is warranted, as this change does not affect the controlling operation.

CONTRACT CHANGE ORDER MEMORANDUM

EA: 0120R4 CCO: 42 - 0 DATE: 8/11/2005

CONCURRED BY:		
Construction Engineer:	Lourdes David	Date 8/4/2005
Bridge Engineer:	Gary Lai	Date 8/4/2005
FHWA Representative:		Date
Project Engineer:	Trinh Lai	Date 8/11/2005
Other (specify): Dan Adams, Br. Design Engineer		Date 8/5/2005
Saba Mohan, Br. Foundations		Date 8/5/2005
Robert Kobal, HQs Assist Construction Coordinator		Date 8/8/2005
District Prior Approval By:	Rick Morrow, Area Construction E	Date 8/8/2005
HQ (Issue Approve) By:		Date
Resident Engineer's Signature:		Date 8/11/05

ESTIMATE OF COST

	THIS REQUEST	TOTAL TO DATE
ITEMS	$0.00	$0.00
FORCE ACCOUNT	$20,000.00	$20,000.00
AGREED PRICE	$0.00	$0.00
ADJUSTMENT	$0.00	$0.00
TOTAL	$20,000.00	$20,000.00

FEDERAL PARTICIPATION

☑ PARTICIPATING ☐ PARTICIPATING IN PART ☐ NONE
☐ NON-PARTICIPATING (MAINTENANCE) ☐ NON-PARTICIPATING

FEDERAL SEGREGATION (if more than one Funding Source or P.I.P. type)
☑ CCO FUNDED PER CONTRACT ☐ CCO FUNDED AS FOLLOWS

FEDERAL FUNDING SOURCE	PERCENT

STATE OF CALIFORNIA - DEPARTMENT OF TRANSPORTATION

CONTRACT CHANGE ORDER

Change Requested by: Engineer

CCO: 42	Suppl. No. 1	Contract No. 04 - 0120R4	Road SF-80-12.6/13.2	FED. AID LOC.: ACBRIM-080-1(097)N

To: **CC MYERS INC**

You are directed to make the following changes from the plans and specifications or do the following described work not included in the plans and specifications for this contract. ***NOTE: This change order is not effective until approved by the Engineer.***

Description of work to be done, estimate of quantities and prices to be paid. (Segregate between additional work at contract price, agreed price and force account.) Unless otherwise stated, rates for rental of equipment cover only such time as equipment is actually used and no allowance will be made for idle time. This last percentage shown is the net accumulated increase or decrease from the original quantity in the Engineer's Estimate.

Extra Work at Force Account:

Prepare three piles for a pile load test at Bent 52 Right footing in accordance with Sheet 2 of this Contract Change Order, and as authorized by the State's Engineer.

Provide support to the State's Engineer to setup and remove the pile load test equipment by furnishing labor, materials, tools, equipment, and incidentals as required to assist the State's Engineer in the installation, operation and removal of State-furnished steel load test beams, State-furnished jacks, bearing plates, drills, and other test equipment. This will include supplying a crane capable of lifting a six (6) meter long test beam weighing 7,711.0 kilograms.

This work will be paid for as extra work as provided for in Section 5-1.24 "Force Account Payment" of the Special Provisions, and Section 4-1.03D "Extra Work" of the Standard Specifications.

Estimated cost of Extra Work at Force Account $5,000.00

Estimated Cost: **Increase** ☑ **Decrease** ☐ **$5,000.00**

By reason of this order the time of completion will be adjusted as follows: 0 days

Submitted by

Signature	Resident Engineer: LOURDES DAVID	Date 11/4/05

Approval Recommended by

Signature	Construction Engineer: LOURDES DAVID	Date 11/4/05

Engineer Approval by

Signature	(Print name and title) AMER BATA - Chief / Lourdes David	Date 12/5/05

We the undersigned contractor, have given careful consideration to the change proposed and agree, if this proposal is approved, that we will provide all equipment, furnish the materials, except as may otherwise be noted above, and perform all services necessary for the work above specified, and will accept as full payment therefor the prices shown above.

NOTE: If you, the contractor, do not sign acceptance of this order, your attention is directed to the requirements of the specifications as to proceeding with the ordered work and filing a written protest within the time therein specified.

Contractor Acceptance by

Signature	(Print name and title)	Date
Dewey C. Lee, Jr	DEWEY C. LEE, JR. Contract Administrator	11/14/05

C.C.O. No. 42-S1
Sheet 2 of 2

DESCRIPTION
Bent 52 Right
Load Test

DRAWN BY:
CHKD BY:
DATE:

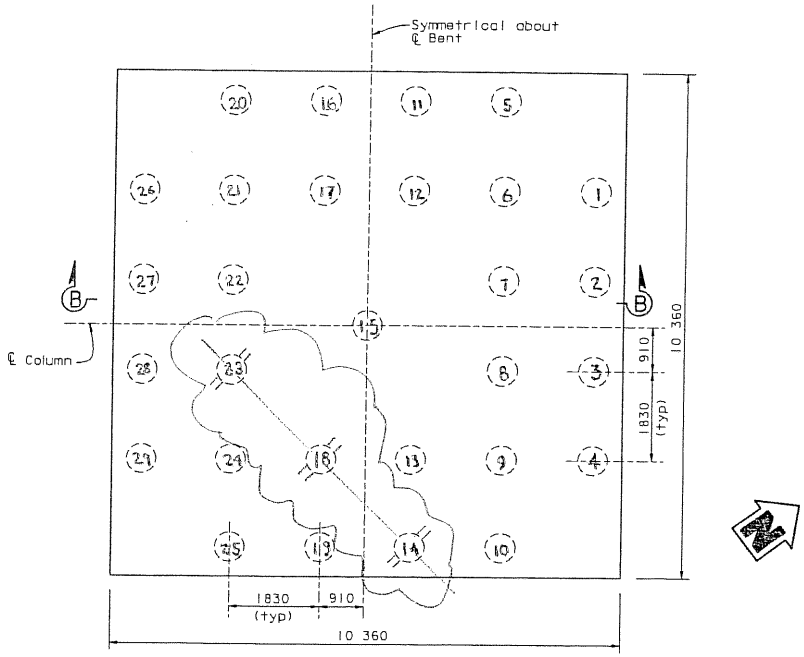

FOOTING PLAN - BENT 52R

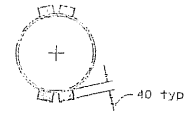

SECTION D-D

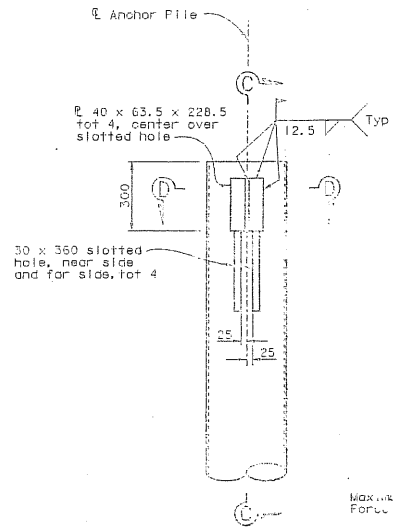

PART ELEVATION

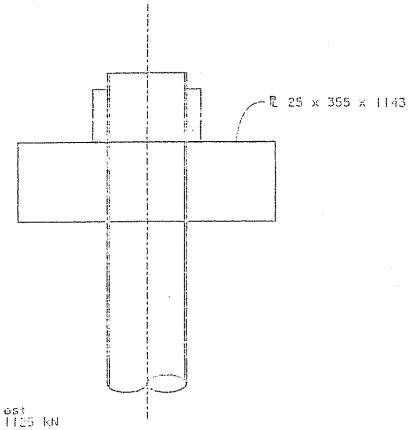

SECTION C-C

ANCHOR PILE DETAIL
1:10

Note:

1. Details are applicable for the test and anchor piles.
2. Only the test pile shall receive the PL 40 x 63.5 x 228.5 blocks.
3. Alignment of the slots and 40 PL's shall permit the PL 25 x 355 x 1143 to pass through the pile.
4. The slots cut into the test and anchor piles shall be in the same orientation for all three piles. Please note the alignment of the test pile and anchor pile group is diagonal to the centerline of the footing and not parallel.
5. Anchor Pile # 23 & 14 shall be cut to the same elevation and 0.5m higher than the Test Pile # 18

CONTRACT CHANGE ORDER

Change Requested by: Contractor

CCO: 43	Suppl. No. 0	Contract No. 04 - 0120R4	Road SF-80-12.6/13.2	FED. AID LOC.: ACBRIM-080-1(097)N

To: **CC MYERS INC**

You are directed to make the following changes from the plans and specifications or do the following described work not included in the plans and specifications for this contract. ***NOTE: This change order is not effective until approved by the Engineer.***

Description of work to be done, estimate of quantities and prices to be paid. (Segregate between additional work at contract price, agreed price and force account.) Unless otherwise stated, rates for rental of equipment cover only such time as equipment is actually used and no allowance will be made for idle time. This last percentage shown is the net accumulated increase or decrease from the original quantity in the Engineer's Estimate.

Adjustment of Compensation at Lump Sum:

Replace the last two paragraphs of the Special Provisions Section 5-1.25, "Payments", with the following:

In determining the partial payments to be made to the Contractor, only the following listed materials will be considered for inclusion in the payment as materials furnished but not incorporated in the work:

A. Temporary Bypass Structure, East Tie-In
B. Temporary Bypass Structure, Viaduct
C. Temporary Bypass Structure, West Tie-In

Materials furnished but not incorporated into the work in fenced areas with locked gates or in locked warehouses will be eligible for partial payment if the Contractor furnishes evidence satisfactory to the Engineer that its storage is subject to or under the control of the Department and that it has been designated or fabricated specifically for this project and is of such character that it is not adaptable to any other use. Such materials are not required to be stored within the State of California.

The total amount paid for materials furnished but not incorporated in the work shall not exceed 25 percent of the total contract amount.

To be eligible for these payments for any material stored outside the United States, the Contractor shall furnish an advance payment bond, first demand bank guarantee, or combination of no more than two thereof to secure the value of potential partial payments for material furnished but not incorporated in the work pursuant to these special provisions and Section 9-1.06, "Partial Payments", of the Standard Specifications. The advance payment bond or first demand bank guarantee shall be in a sum not less than the amount requested for payment by the Contractor, and shall, at a minimum, match the terms of the sample advance payment bond or first demand bank guarantee forms attached to this change order. The value of the advance payment bond or first demand bank guarantee shall not be adjusted more than once per year. The Contractor shall certify in writing to the Engineer that the proposed bonding company or bank complies with these special provisions. The bonding company shall be licensed to do business in the State of California, and shall be certified to write a bond equal to 30% of the executed contract price by the United States Department of the Treasury. The bank shall have United States operations with a minimum rating of "A-" by either AM Best or Standard & Poor. All alterations, extensions of time, extra and additional work, and other changes authorized by these special provisions or any part of the contract may be made without securing the consent of the surety of the bond or the bank.

Adjustment of Compensation at Lump Sum for the amount of $75,953.88 will be for payment of interest on loans for materials listed above for the period beginning April 1, 2005 through the time that this contract change order becomes effective. Payment will be made with the submittal of proper documentation.

By reason of this change, it is agreed that no further compensation is due to the Contractor, including compensation for any finance charges, bonds, sureties or customs custody deposits, for material used for the items listed above, for delays caused by the Department after April 1, 2005.

Estimated cost of Adjustment of Compensation at Lump Sum $75,953.88

CONTRACT CHANGE ORDER

Change Requested by: Contractor

CCO: 43	Suppl. No. 0	Contract No. 04 - 0120R4	Road SF-80-12.6/13.2	FED. AID LOC.: ACBRIM-080-1(097)N

Estimated Cost: Increase ☑ Decrease ☐ **$75,953.88**

By reason of this order the time of completion will be adjusted as follows: 0 days

Submitted by

Signature	Resident Engineer: LOURDES DAVID	Date 9/15/05

Approval Recommended by

Signature	Construction Engineer: LOURDES DAVID	Date 9/15/05

Engineer Approval by

Signature	(Print name and title) AMER BATA - Chief	Date 9/15/05

We the undersigned contractor, have given careful consideration to the change proposed and agree, if this proposal is approved, that we will provide all equipment, furnish the materials, except as may otherwise be noted above, and perform all services necessary for the work above specified, and will accept as full payment therefor the prices shown above.

NOTE: If you, the contractor, do not sign acceptance of this order, your attention is directed to the requirements of the specifications as to proceeding with the ordered work and filing a written protest within the time therein specified.

Contractor Acceptance by

Signature	(Print name and title) L.J. Clifford - CFO	Date 9-15-05

STATE OF CALIFORNIA - DEPARTMENT OF TRANSPORTATION

CONTRACT CHANGE ORDER MEMORANDUM

TO: AMER BATA / LOURDES DAVID	FILE: **E.A.** 04 - 0120R4
FROM: LOURDES DAVID	**CO-RTE-PM** SF-80-12.6/13.2
	FED. NO. ACBRIM-080-1(097)N
CCO#: **43** SUPPLEMENT#: **0** Category Code: **CHSA**	CONTINGENCY BALANCE (incl. this change) **$1,137,869.90**
COST: **$75,953.88** INCREASE ☑ DECREASE ☐	HEADQUARTERS APPROVAL REQUIRED? ☑ YES ☐ NO
SUPPLEMENTAL FUNDS PROVIDED: **$0.00**	IS THIS REQUEST IN ACCORDANCE WITH ENVIRONMENTAL DOCUMENTS? ☑ YES ☐ NO
CCO DESCRIPTION: Materials On Hand Payment Allowance	**PROJECT DESCRIPTION:** CONSTRUCT ROUTE 80 TEMP BYPASS STRUCTURE

LOCATION: IN THE CITY AND COUNTY OF SAN FRANCISCO FROM YERBA BUENA TUNNEL TO 0.6 KM EAST OF THE YERBA BUENA TUNNEL

THIS CHANGE ORDER PROVIDES FOR:

Partial payment for materials furnished but not incorporated into the work (Materials on Hand) that is stored outside of the United States, secured by an advance payment bond provided by the Contractor.

The Contract was awarded in March 2004 with an original construction completion date of July 2005. Since it's inception the project has been under either a full or partial suspension as a result of delays in completion of the Sub-station Contract (preceding this project) or the postponed Self Anchored Suspension (SAS) Bridge Contract, due to the fact that the lone bidder's cost estimate was about double the engineer's estimate.

The South-South Detour (SSD) Temporary Bypass Structure (TBS) Contract was originally designed to be in service for a period of approximately 2 years. Completion of the contract by July 2005 as scheduled would have compromised safety of the structure and the safety of the travelling public, as the TBS would have been under service for twice (approximately 4 years) its intended load carrying service life duration. Also, the negative impact on the travelling public, as a result of the reduced speed imposed on the TBS would increase traveler delays across the bridge, compounded with increased number of accidents on the bridge, due to the inherent nature of the double S-curve bridge geometric layout.

As a result of the ordered suspensions, the contract duration has increased by over 2.5 times its original duration (from 475 days to 1205 days). In order to reduce the Departments exposure to a possible "Change in Character of Work" Claim (as specified under Section 4-1.03C of the Standard Specifications), it is prudent to act proactively by issuing this change order that compensates the contractor for some of the costs of delay by paying for materials furnished but not incorporated into the work that are stored outside of the United States. In order to reduce the Department's exposure to default on these materials, the payments are secured by a contractor provided bond.

Under the current contract there are no clauses that allow for partial payments to be made for materials stored and controlled outside of the United States. As a result of the past and current suspensions noted above, the Contractor has been impacted by having to finance these costs by securing loans without payments from the State. A change in the contract language is necessary to allow the State to make payments to the Contractor with the condition that a bond is secured as collateral for such payments. Allowing for partial payments will enable the Department to compensate the Contractor for finance costs incurred since April 1, 2005. No further finance costs will be warranted once this contract change order is executed as these costs will eventually be paid for by contract items.

The Adjustment of Compensation at Lump Sum for the amount of $75,953.88 will be for payment of interest on loans for materials listed above for the period beginning April 1, 2005 through the time that this contract change order becomes effective. Payment will be made with the submittal of proper documentation.

Note that the proposed change order is part of the currently advertised SAS contract (04-0120F4) special provisions (section 5-1.25, "Payments") requirements.

All other possible options have been exhausted, such as having the steel raw material be shipped and stored in the United States so payment under the current contract special provisions section 5-1.25, "Payments", be made, but this would mean the re-shipping of the steel raw material back to China for fabrication of the structural steel members. To date, fabrication of the steel raw material has not yet commenced, since the TBS design has not been finalized. This option would further delay the contract along with causing undue financial hardship to the Contractor as a result of double handling of the material.

Pete Siegenthaler - Principal Engineer and Amer Bata - Area Construction Manager SFOBB, concur with this change on 9/6/05. On 09/06/2005 Amer Bata and Lourdes David - Construction Engineer, granted District Prior Approval of this change order. Bob Pieplow - Program Manager, Jon Tapping - Toll Bridge Chief concurred with this change on 8/30/05. Jose Aguirre - CT Asst. Chief Counsel concurred with this change on 5/27/05. Trinh Lai - Project Engineer and Janet Adams - Project Manager concurred with this change on 9/13/05 and 9/14/05. Nancy Bobb - FHWA concurred with this change on 09/14/05.

Design and Maintenance concurrence is not required as this change does not affect the final design.

No adjustment of the contract time is warranted as this change does not affect the controlling operation.

CONCURRED BY:		
Construction Engineer:	Lourdes David LD	Date 9/6/2005
Bridge Engineer:		Date
FHWA Representative:	Nancy Bobb	Date9/14/2005
Project Engineer:	Trinh Lai, Project Engineer	Date9/13/2005
Other (specify): Robert Kobal, HQ Asst. Constr. Coordinator		Date8/22/2005
Janet Adams, Project Manager		Date9/14/2005
Jose Aguirre, Asst. Chief Counsel		Date5/27/2005
District Prior Approval By:	Amer Bata - Area Const. Mgr. AB	Date 9/6/2005
HQ (Issue Approve) By:	Bob Pieplow, Program Manager	Date8/30/2005
Resident Engineer's Signature:		Date 9/14/05

ESTIMATE OF COST

	THIS REQUEST	TOTAL TO DATE
ITEMS	$0.00	$0.00
FORCE ACCOUNT	$0.00	$0.00
AGREED PRICE	$0.00	$0.00
ADJUSTMENT	$75,953.88	$75,953.88
TOTAL	$75,953.88	$75,953.88

FEDERAL PARTICIPATION

☑ PARTICIPATING ☐ PARTICIPATING IN PART ☐ NONE
☐ NON-PARTICIPATING (MAINTENANCE) ☐ NON-PARTICIPATING

FEDERAL SEGREGATION (if more than one Funding Source or P.I.P. type)
☑ CCO FUNDED PER CONTRACT ☐ CCO FUNDED AS FOLLOWS

FEDERAL FUNDING SOURCE	PERCENT

CONTRACT CHANGE ORDER

Change Requested by: Engineer

CCO: 44	Suppl. No. 0	Contract No. 04 - 0120R4	Road SF-80-12.6/13.2	FED. AID LOC.: ACBRIM-080-1(097)N

To: **CC MYERS INC**

You are directed to make the following changes from the plans and specifications or do the following described work not included in the plans and specifications for this contract. ***NOTE: This change order is not effective until approved by the Engineer.***

Description of work to be done, estimate of quantities and prices to be paid. (Segregate between additional work at contract price, agreed price and force account.) Unless otherwise stated, rates for rental of equipment cover only such time as equipment is actually used and no allowance will be made for idle time. This last percentage shown is the net accumulated increase or decrease from the original quantity in the Engineer's Estimate.

Extra Work at Lump Sum:

Perform additional design work in order to incorporate the following items of work into the project electrical plans:

1) Relocate 8 call boxes from the existing structure to the new Temporary Bypass Structure. Call boxes to be relocated are identified as CB-139, 239, 140, 240, 339, 439, 340, and 440.

2) Install new power and signal cables from the existing structure to the new call box locations relocated under Item No. 1.

3) Field verify the location of the 4 call boxes located east of Pier E1 and relocate those boxes if necessary. Call boxes to be field verified are identified as CB-141, 241, 341, and 441.

4) Remove existing circuits I.D. Nos. 237 and 239 from junction box in curb of westbound YBI Off Ramp, intercept circuits in Vault 2A, and re-route and connect to existing circuit 237/239 conductors feeding westbound YBI tunnel lights.

5) Incorporate the 13 lighting and navigational-aid circuits concerning the as-built drawings from Contract 04-0120G1 (Circuit 100, 101, 103, 201, 236, 237, 239, 241, 242, 243, 244, 247 and 249) into the new bridge.

6) Abandon Utility Vaults 3 and 4, intercept the bridge ground wire at a manhole between the new YBI substation and the West Tie-In and route to Vaults 2A and 2B.

7) Intercept cables, listed in Table A and B of the original contract plan Sheet E-9, in Vault 2A. Provide for the removal of the temporary cables installed under Contract 04-0120G1 after the cut over to these new cables.

For this work, the Contractor will be compensated a lump sum of $47,480.00. This sum constitutes full and final compensation, including all markups and interest, associated with the work of this change.

This change order provides compensation for additional design costs only. Any additional costs associated with the construction of the electrical system due to the design revisions incorporated due to this change are deferred and shall be paid separately.

Total Cost of Extra Work at Lump Sum $47,480.00

CONTRACT CHANGE ORDER

Change Requested by: Engineer

CCO 44	Suppl. No. 0	Contract No. 04 - 0120R4	Road SF-80-12.6/13.2	FED. AID LOC.: ACBRIM-080-1(097)N

Estimated Cost: Increase ☑ Decrease ☐ $47,480.00

By reason of this order the time of completion will be adjusted as follows: 0 days

Submitted by

Signature	Resident Engineer	Date
	BILL CASEY	4-2-08

Approval Recommended by

Signature	Area Construction Manager	Date
	DENNIS TURCHON	4/4/08

Engineer Approval by

Signature	Area Construction Manager	Date
	DENNIS TURCHON	5/19/08

We the undersigned contractor, have given careful consideration to the change proposed and agree, if this proposal is approved, that we will provide all equipment, furnish the materials, except as may otherwise be noted above, and perform all services necessary for the work above specified, and will accept as full payment therefor the prices shown above.

NOTE: If you, the contractor, do not sign acceptance of this order, your attention is directed to the requirements of the specifications as to proceeding with the ordered work and filing a written protest within the time therein specified.

Contractor Acceptance by

Signature	(Print name and title)	Date
Dewey C. Lee, Jr.	DEWEY C. LEE JR. Contract Manager	5/13/08

STATE OF CALIFORNIA - DEPARTMENT OF TRANSPORTATION

CONTRACT CHANGE ORDER MEMORANDUM

DATE: 3/26/2008 RECEIVED Page 1 of 2

TO: MIKE FORNER / DENNIS TURCHON	FILE: E.A. 04 - 0120R4 CO-RTE-PM SF-80-12.6/13.2 007658 JUN 20 08 FED. NO. ACBRIM-080-1(097)N
FROM: BILL CASEY	
CCO#: **44** SUPPLEMENT#: **0** Category Code: **CBPC**	CONTINGENCY BALANCE (incl. this change) **$46,542,937.12**
COST: **$47,480.00** INCREASE ☑ DECREASE ☐	HEADQUARTERS APPROVAL REQUIRED? ☐ YES ☑ NO
SUPPLEMENTAL FUNDS PROVIDED: **$0.00**	IS THIS REQUEST IN ACCORDANCE WITH ENVIRONMENTAL DOCUMENTS? ☑ YES ☐ NO
CCO DESCRIPTION: Electrical Design	**PROJECT DESCRIPTION:** CONSTRUCT ROUTE 80 TEMP BYPASS STRUCTURE

Original Contract Time:	Time Adj. This Change:	Previously Approved CCO Time Adjustments:	Percentage Time Adjusted: (including this change)	Total # of Unreconciled Deferred Time CCO(s): (including this change)
475 Day(s)	**0** Day(s)	**1195** Day(s)	**252** %	**7**

THIS CHANGE ORDER PROVIDES FOR:

compensation to the contractor for providing design services incorporating various Department-ordered electrical changes into the project plans.

This contract provides for the construction of a temporary detour for both eastbound and westbound I-80 traffic that allows for the tie in of the east span of the new San Francisco Oakland Bay Bridge (SFOBB) to Yerba Buena Island. The detour consists of three main structures, the east tie in to the bridge, the west tie in to the island, and the viaduct structure between the two tie ins. The contract was awarded as a performance based project with the contractor responsible for meeting the design criteria specified in the contract.

This change order compensates the contractor for providing design services in order to incorporate numerous Department-ordered design changes into the contract electrical plans. The changes mainly concern the relocation of existing call boxes from the existing structure to the temporary structure and incorporating electrical changes from an earlier contract (04-0120G1) that were implemented after this contract was awarded.

Compensation shall be paid as extra work at an agreed lump sum of $47,480.00 which shall be financed from the contract's contingency funds. A cost estimate is on file.

This change order provides compensation for additional design costs only. Any additional costs associated with the construction of the electrical system due to the design revisions incorporated due to this change are deferred and shall be paid separately.

No adjustment of contract time is warranted as the work will not affect the controlling operation.

This change was concurred by Alec Melkonians - Asst. Project Manager and Hong Wong - Project Engineer.

Maintenance concurrence is not required as the viaduct is a temporary structure and doesn't affect any permanent roadway features.

ADA Notice: For individuals with sensory disabilities, this document is available in alternate formats. For information call: (916) 654-6410 or TDD (916) 654-3880 or write Records and Forms Management, 1120 N Street, MS-89, Sacramento, CA 95814.

CONCURRED BY:			
Construction Engineer:	Raoul Maltez, Senior TE	Date	
Bridge Engineer:		Date	
Project Engineer:	Hong Wong, PE	Date	4/2/08
Project Manager:	Alec Melkonians	Date	4/2/08
FHWA Rep.:		Date	
Environmental:		Date	
Other (specify):		Date	
Other (specify):		Date	
District Prior Approval By:		Date	
HQ (Issue Approve) By:		Date	
Resident Engineer's Signature:		Date	

4-2-08

ESTIMATE OF COST	THIS REQUEST	TOTAL TO DATE
ITEMS	$0.00	$0.00
FORCE ACCOUNT	$0.00	$0.00
AGREED PRICE	$47,480.00	$47,480.00
ADJUSTMENT	$0.00	$0.00
TOTAL	$47,480.00	$47,480.00

FEDERAL PARTICIPATION

☐ PARTICIPATING ☐ PARTICIPATING IN PART ☐ NONE
☐ NON-PARTICIPATING (MAINTENANCE) ☑ NON-PARTICIPATING

FEDERAL SEGREGATION (if more than one Funding Source or P.I.P. type)
☑ CCO FUNDED PER CONTRACT ☐ CCO FUNDED AS FOLLOWS

FEDERAL FUNDING SOURCE	PERCENT

ADA Notice: For individuals with sensory disabilities, this document is available in alternate formats. For information call: (916) 654-6410 or TDD (916) 654-3880 or write Records and Forms Management, 1120 N Street, MS-89, Sacramento, CA 95814.

STATE OF CALIFORNIA - DEPARTMENT OF TRANSPORTATION

CONTRACT CHANGE ORDER

Change Requested by: Engineer

CCO: 45	Suppl. No. 0	Contract No. 04 - 0120R4	Road SF-80-12.6/13.2	FED. AID LOC.: ACBRIM-080-1(097)N

To: **CC MYERS INC**

You are directed to make the following changes from the plans and specifications or do the following described work not included in the plans and specifications for this contract. ***NOTE: This change order is not effective until approved by the Engineer.***

Description of work to be done, estimate of quantities and prices to be paid. (Segregate between additional work at contract price, agreed price and force account.) Unless otherwise stated, rates for rental of equipment cover only such time as equipment is actually used and no allowance will be made for idle time. This last percentage shown is the net accumulated increase or decrease from the original quantity in the Engineer's Estimate.

Estimate of Increase in Contract Item at Contract Price:

Item No. 21: TEMPORARY COVER

10000 M2 (+200.00%) $5.00 /M2 = +$50,000.00 (+200.00%)

Estimated total cost for Increase in Contract Item.....$50,000.00

Adjustment of Compensation at Unit Price:

Perform additional water pollution control in accordance with Section 10-1.02 'Water Pollution Control', of the Special Provisions and all approved Storm Water Pollution Prevention Plan (SWPPP) Amendments to date.

Cleanup, repair, removal, improper installation, and replacement of water pollution control practices damaged by the Contractor's negligence shall not be considered as included in the cost for performing water pollution control.

For performing additional water pollution control, the sum of $421.00 per day will be paid for Item No. 15 'Water Pollution Control', for the duration of the contract.

For performing work in preparing any required SWPPP Addendums, the sum of $300.00 will be paid for each addendum.

Estimated cost of Adjustment of Compensation at Agreed Unit Price $200,000.00

Estimated Cost: Increase ☑ Decrease ☐ **$250,000.00**

By reason of this order the time of completion will be adjusted as follows: 0 days

Submitted by

Signature	Resident Engineer: LOURDES DAVID	Date 1/4/06

Approval Recommended by

Signature	Construction Engineer: LOURDES DAVID	Date 1/4/06

Engineer Approval by

Signature	(Print name and title) RICK MORROW - Chief	Date 2/15/06

We the undersigned contractor, have given careful consideration to the change proposed and agree, if this proposal is approved, that we will provide all equipment, furnish the materials, except as may otherwise be noted above, and perform all services necessary for the work above specified, and will accept as full payment therefor the prices shown above.

NOTE: If you, the contractor, do not sign acceptance of this order, your attention is directed to the requirements of the specifications as to proceeding with the ordered work and filing a written protest within the time therein specified.

Contractor Acceptance by

Signature	(Print name and title) Daniel B. Hanick, Pres	Date 2/02/06

STATE OF CALIFORNIA - DEPARTMENT OF TRANSPORTATION

CONTRACT CHANGE ORDER MEMORANDUM

TO: RICK MORROW / LOURDES DAVID	FILE: **E.A.** 04 - 0120R4
FROM: LOURDES DAVID	**CO-RTE-PM** SF-80-12.6/13.2
	FED. NO. ACBRIM-080-1(097)N
CCO#: **45** SUPPLEMENT#: **0** Category Code: **CDPF**	CONTINGENCY BALANCE (incl. this change) **$2,973,755.39**
COST: **$250,000.00** INCREASE ☑ DECREASE ☐	HEADQUARTERS APPROVAL REQUIRED? ☑ YES ☐ NO
SUPPLEMENTAL FUNDS PROVIDED: **$0.00**	IS THIS REQUEST IN ACCORDANCE WITH ENVIRONMENTAL DOCUMENTS? ☑ YES ☐ NO
CCO DESCRIPTION: ADDITIONAL SWPPP	**PROJECT DESCRIPTION:** CONSTRUCT ROUTE 80 TEMP BYPASS STRUCTURE

LOCATION: IN THE CITY AND COUNTY OF SAN FRANCISCO FROM YERBA BUENA TUNNEL TO 0.6 KM EAST OF THE YERBA BUENA TUNNEL

THIS CHANGE ORDER PROVIDES FOR:

Performing additional water pollution control in accordance with Section 10-1.02 'Water Pollution Control', of the Special Provisions and all approved Storm Water Pollution Prevention Plan (SWPPP) Amendments to date.

Currently, portions of work in the field for the East Tie-In and West Tie-In segments of the Temporary Bypass Structure (TBS) are suspended to delay switching traffic onto the TBS until 2007 to prevent unnecessary traffic impacts that would occur if the Contractor's "as bid" schedule was followed.

The Department is performing coordination for the whole San Francisco Oakland Bay Bridge (SFOBB) corridor to meet the current delivery schedule for the Self Anchored Suspension (SAS) contract with the least impact to the traveling public. It has been determined that the TBS is not needed until July 2007. However, changes to the SAS and Yerba Buena Island (YBI) Transition contracts may still occur and is to be considered. These changes may affect the time of completion of the TBS and further delay the traffic switch beyond July 2007.

The Contractor's original budget and contract schedule of 475 calendar days necessitated SWPPP implementation for only one rain season. However, with the current projected completion date of Summer 2007, SWPPP implementation is now projected to be required for an additional 2 rain seasons.

For performing additional water pollution control, payment for the Adjustment of Compensation of this change order will be a Unit Price of $421.00 per day, which is the original daily unit price for Contract Item No. 15 'Water Pollution Control'. For performing work in preparing any required SWPPP Addendums, the sum of $300.00 will be paid for each addendum. Total estimated cost for this change is $200,000.00., which can be financed from the contingency fund. A cost analysis for this change order is on file.

Additionally, Contract Item No. 21 'Temporary Cover' has overun by 175% to date. As there is still the balance of the 2005/2006 and 2006/2007 rainy seasons remaining, the contract item must be increased to accommodate the added work. Total estimated cost for this change is $50,000.00, which can be financed from the contingency fund.

Jon Tapping - Project Manager, Rick Morrow - Area Construction Manager, Nancy Bobb - FHWA, concur with this change. Ken Darby - HQ CCO Review also granted approval of this change.

No adjustment of the contract time is warranted, as this change does not affect the controlling operation..

Design and Maintenance concurrence is not required as this suspension does not affect the final design.

CONCURRED BY:	
Construction Engineer: Lourdes David	Date 2/1/06
Bridge Engineer:	Date
FHWA Representative: Nancy Bobb	Date2/14/2006
Project Engineer:	Date
Other (specify): Jon Tapping, Project Manager	Date2/15/2006
Rick Morrow, Supervising Bridge Engineer	Date
	Date
District Prior Approval By:	Date
HQ (Issue Approve) By: Ken Darby, HQ CCO	Date 2/7/2006
Resident Engineer's Signature:	Date 2/15/06

ESTIMATE OF COST

	THIS REQUEST	TOTAL TO DATE
ITEMS	$50,000.00	$50,000.00
FORCE ACCOUNT	$0.00	$0.00
AGREED PRICE	$0.00	$0.00
ADJUSTMENT	$200,000.00	$200,000.00
TOTAL	$250,000.00	$250,000.00

FEDERAL PARTICIPATION

☑ PARTICIPATING ☐ PARTICIPATING IN PART ☐ NONE
☐ NON-PARTICIPATING (MAINTENANCE) ☐ NON-PARTICIPATING

FEDERAL SEGREGATION (if more than one Funding Source or P.I.P. type)
☑ CCO FUNDED PER CONTRACT ☐ CCO FUNDED AS FOLLOWS

FEDERAL FUNDING SOURCE	PERCENT

CONTRACT CHANGE ORDER

Change Requested by: Engineer

CCO: 46	Suppl. No. 0	Contract No. 04 - 0120R4	Road SF-80-12.6/13.2	FED. AID LOC.: ACBRIM-080-1(097)N

To: **CC MYERS INC**

You are directed to make the following changes from the plans and specifications or do the following described work not included in the plans and specifications for this contract. ***NOTE: This change order is not effective until approved by the Engineer.***

Description of work to be done, estimate of quantities and prices to be paid. (Segregate between additional work at contract price, agreed price and force account.) Unless otherwise stated, rates for rental of equipment cover only such time as equipment is actually used and no allowance will be made for idle time. This last percentage shown is the net accumulated increase or decrease from the original quantity in the Engineer's Estimate.

Extra Work at Force Account:

Re-open Southgate Road to one way traffic in accordance with page 2 of 2 of this Contract Change Order (Sheet TH-2), Section 7-1.08 'Public Convenience' of the Standard Specifications, and as authorized by the Engineer.

All work, including asphalt concrete removal, shall be performed in accordance with the Contract Plans, Contract Special Provisions, Standard Specifications, and the Standard Plans, and as authorized by the Engineer.

This work will be paid for in accordance with Section 5-1.24 "Force Account Payment" of the Special Provisions and Section 4-1.03D "Extra Work" of the Standard Specifications.

Compensation for delays resulting from this work or any potential traffic impacts will be made in accordance with Section 8-1.09 "Right of Way Delays" of the Standard Specifications.

Consideration of a time adjustment will be deferred until completion of work specified herein. Determination of a commensurate time extension will be made in accordance with Section 8-1.07 Liquidated Damages of the Standard Specifications.

Estimated cost of Extra Work at Force Account $50,000.00

Estimated Cost: **Increase** ☑ **Decrease** ☐ **$50,000.00**

By reason of this order the time of completion will be adjusted as follows: Deferred

Submitted by

Signature	Resident Engineer: LOURDES DAVID	Date 11/4/06

Approval Recommended by

Signature	Construction Engineer: LOURDES DAVID	Date 11/4/06

Engineer Approval by

Signature	(Print name and title) RICK MORROW - Chief	Date

We the undersigned contractor, have given careful consideration to the change proposed and agree, if this proposal is approved, that we will provide all equipment, furnish the materials, except as may otherwise be noted above, and perform all services necessary for the work above specified, and will accept as full payment therefor the prices shown above.

NOTE: If you, the contractor, do not sign acceptance of this order, your attention is directed to the requirements of the specifications as to proceeding with the ordered work and filing a written protest within the time therein specified.

Contractor Acceptance by

Signature	(Print name and title)	Date

DIST	COUNTY	ROUTE	KILOMETER POST TOTAL PROJECT	SHEET No	TOTAL SHEETS

REGISTERED CIVIL ENGINEER

PLANS APPROVAL DATE

The State of California or its officers or agents shall not be responsible for the accuracy or completeness of electronic copies of this plan sheet.

REGISTERED PROFESSIONAL ENGINEER No. EXP. CIVIL STATE OF CALIFORNIA

Caltrans now has a web site! To get to the web site, go to: http://www.dot.ca.gov

Caltrans Metric

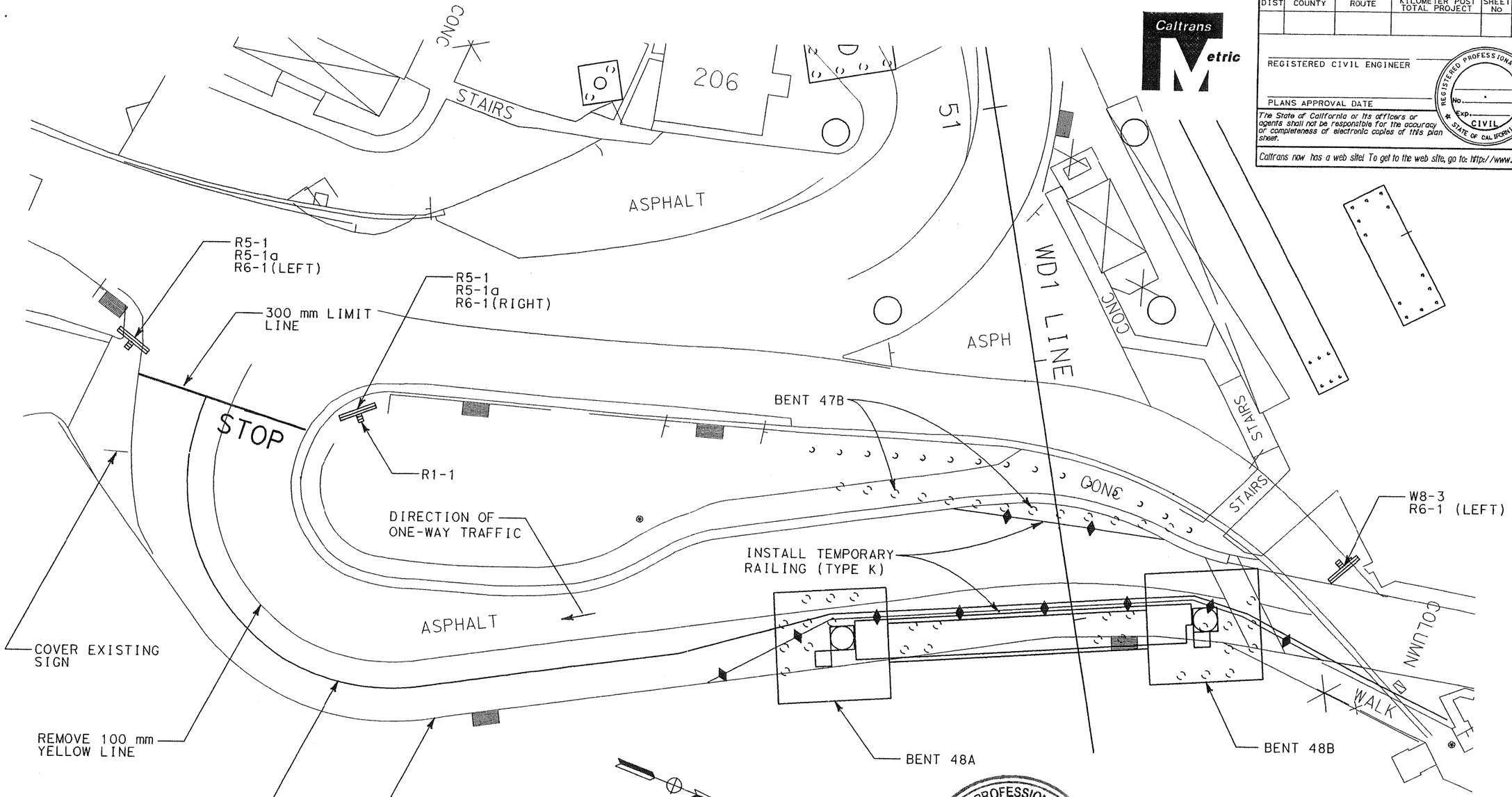

NOTES:

1. REFER TO MUTCD AND STANDARD PLANS FOR SIGN AND STRIPING DETAILS.
2. LOCATION OF SIGNS, MARKINGS AND CONCRETE BARRIERS TO BE DETERMINED BY THE ENGINEER.

REGISTERED PROFESSIONAL ENGINEER TRINH T. LAI C 63630 EXP 9/30/06 CIVIL STATE OF CALIFORNIA

CONTRACT NO. 04-0120R4

CONTRACT CHANGE ORDER NO. 46

SHEET 2 OF 2

TRAFFIC HANDLING

ONE-WAY TRAFFIC THROUGH SOUTHGATE ROAD

NO SCALE

TH-2

DATE	REVISED BY	DATE REVISED

CALCULATED/ DESIGNED BY

CHECKED BY

PROJECT ENGINEER

STATE OF CALIFORNIA - DEPARTMENT OF TRANSPORTATION

Caltrans

RELATIVE BORDER SCALE IS IN MILLIMETERS 0 20 40 60 80

USERNAME => $USER

LAST REVISION 10-14-05

DATE PLOTTED => $DATE

TIME PLOTTED => $TIME

STATE OF CALIFORNIA - DEPARTMENT OF TRANSPORTATION

CONTRACT CHANGE ORDER MEMORANDUM

DATE: 10/28/2005

TO: RICK MORROW / MAHANTESH ANIGOL	FILE: E.A. 04 - 0120R4
	CO-RTE-PM SF-80-12.6/13.2
FROM: MAHANTESH ANIGOL	FED. NO. ACBRIM-080-1(097)N
CCO#: 46 SUPPLEMENT#: 0 Category Code: CKTJ	CONTINGENCY BALANCE (incl. this change) $2,973,755.39
COST: $50,000.00 INCREASE ☑ DECREASE ☐	HEADQUARTERS APPROVAL REQUIRED? ☐ YES ☑ NO
SUPPLEMENTAL FUNDS PROVIDED: $0.00	IS THIS REQUEST IN ACCORDANCE WITH ENVIRONMENTAL DOCUMENTS? ☑ YES ☐ NO
CCO DESCRIPTION: Re-open Southgate road	**PROJECT DESCRIPTION:** CONSTRUCT ROUTE 80 TEMP BYPASS STRUCTURE

LOCATION: IN THE CITY AND COUNTY OF SAN FRANCISCO FROM YERBA BUENA TUNNEL TO 0.6 KM EAST OF THE YERBA BUENA TUNNEL

THIS CHANGE ORDER PROVIDES FOR:

reopening Southgate Road to one way traffic in accordance with page 2 of 2 of this Contract Change Order (Sheet TH-2), Section 7-1.08, Public Convenience, of the Standard Specifications, and as authorized by the Engineer.

For public convenience, the Department has decided to reopen Southgate Road during the current partial suspension for USCG personnel and the travelling public, with one-way traffic provided through Southgate Road from Macalla Road to Hillcrest Road. Proper one-way traffic through Southgate Road requires using temporary concrete barriers, additional signage, striping, intermittent closures (traffic control), additional falsework, and other modifications to construct work.

Re-opening Southgate Road was recommended by the Office of Toll Bridge Design in a letter dated October 14 , 2005 from Trinh Lai - Project Engineer to Lourdes David - Resident Engineer. Trinh Lai also provided the plans for the roadway reopening. John Thomas - Traffic Safety, recommended and concurred with this change on October 4, 2005.

This work is not covered by any contract items. Therefore, payment for this work will be Extra Work at Force Account for an estimated total cost of $50,000, which can be financed from the contingency plan.

Maintenace concurrence is not required as it does not effect the maintenace of the structure.

Since Southgate road will remain open to public traffic, even after the partial suspension is lifted, the Contractor's operations and efficiency will be impacted. Compensation for delays resulting from this work or potential traffic impacts will be made in accordance with Section 8-1.09 "Right of Way Delays" of the Standard Specifications.

Any time adjustments relating to this work will be deferred as it may impact the controlling operation.

004002 MAR 24 06

CONCURRED BY:		
Construction Engineer: Lourdes David	MA for Lourdes	Date 10/14/2005
Bridge Engineer:		Date
FHWA Representative:		Date
Project Engineer: Trinh Lai		Date 10/14/2005
Other (specify): John Thomas, Traffic Safety		Date 10/4/2005
		Date
		Date
District Prior Approval By: Amer Bata		Date 10/11/2005
HQ (Issue Approve) By:		Date
Resident Engineer's Signature: M. U. Anigol		Date 2/6/06.

ESTIMATE OF COST

	THIS REQUEST	TOTAL TO DATE
ITEMS	$0.00	$0.00
FORCE ACCOUNT	$50,000.00	$50,000.00
AGREED PRICE	$0.00	$0.00
ADJUSTMENT	$0.00	$0.00
TOTAL	$50,000.00	$50,000.00

FEDERAL PARTICIPATION

☑ PARTICIPATING ☐ PARTICIPATING IN PART ☐ NONE
☐ NON-PARTICIPATING (MAINTENANCE) ☐ NON-PARTICIPATING

FEDERAL SEGREGATION (if more than one Funding Source or P.I.P. type)
☑ CCO FUNDED PER CONTRACT ☐ CCO FUNDED AS FOLLOWS

FEDERAL FUNDING SOURCE	PERCENT

STATE OF CALIFORNIA - DEPARTMENT OF TRANSPORTATION

CONTRACT CHANGE ORDER

Change Requested by: Engineer

CCO: 47	Suppl. No. 0	Contract No. 04 - 0120R4	Road SF-80-12.6/13.2	FED. AID LOC.: ACBRIM-080-1(097)N

To: **CC MYERS INC**

You are directed to make the following changes from the plans and specifications or do the following described work not included in the plans and specifications for this contract. ***NOTE: This change order is not effective until approved by the Engineer.***

Description of work to be done, estimate of quantities and prices to be paid. (Segregate between additional work at contract price, agreed price and force account.) Unless otherwise stated, rates for rental of equipment cover only such time as equipment is actually used and no allowance will be made for idle time. This last percentage shown is the net accumulated increase or decrease from the original quantity in the Engineer's Estimate.

Extra Work at Force Account:

In accordance with Sections 10-1.42 and 5-1.27 of the Special Provisions, and Section 7-1.13 of the Standard Specifications, provide the labor, materials, and equipment necessary to remove and dispose of additional hazardous, Class II, and non-hazardous soil material to an appropriate disposal facility as authorized by the Engineer.

Removal and disposal of additional hazardous, Class II, and non-hazardous soil material will be paid for as extra work as provided for in Section 5-1.24 "Force Account Payment" of the Special Provisions, and Section 4-1.03D "Extra Work" of the Standard Specifications.

Estimated cost of Extra Work at Force Account $100,000.00

Estimated Cost: **Increase** ☑ **Decrease** ☐ **$100,000.00**

By reason of this order the time of completion will be adjusted as follows: Deferred

Submitted by

Signature	Resident Engineer: LOURDES DAVID	Date 11/21/05

Approval Recommended by

Signature	Construction Engineer: LOURDES DAVID	Date 11/21/05

Engineer Approval by

Signature	(Print name and title) AMER BATA - Chief	Date

We the undersigned contractor, have given careful consideration to the change proposed and agree, if this proposal is approved, that we will provide all equipment, furnish the materials, except as may otherwise be noted above, and perform all services necessary for the work above specified, and will accept as full payment therefor the prices shown above.

NOTE: If you, the contractor, do not sign acceptance of this order, your attention is directed to the requirements of the specifications as to proceeding with the ordered work and filing a written protest within the time therein specified.

Contractor Acceptance by

Signature	(Print name and title) DANIEL E. HINNCK	Date 11/30/05

STATE OF CALIFORNIA - DEPARTMENT OF TRANSPORTATION

CONTRACT CHANGE ORDER MEMORANDUM

TO: AMER BATA / LOURDES DAVID	FILE: **E.A.** 04 - 0120R4
FROM: LOURDES DAVID	**CO-RTE-PM** SF-80-12.6/13.2
	FED. NO. ACBRIM-080-1(097)N
CCO#: **47** SUPPLEMENT#: **0** Category Code: **CDAX**	CONTINGENCY BALANCE (incl. this change) **$974,321.81**
COST: **$100,000.00** INCREASE ☑ DECREASE ☐	HEADQUARTERS APPROVAL REQUIRED? ☐ YES ☑ NO
SUPPLEMENTAL FUNDS PROVIDED: **$100,000.00**	IS THIS REQUEST IN ACCORDANCE WITH ENVIRONMENTAL DOCUMENTS? ☑ YES ☐ NO
CCO DESCRIPTION: Remove -Dispose Haz / Non-Haz Soil	**PROJECT DESCRIPTION:** CONSTRUCT ROUTE 80 TEMP BYPASS STRUCTURE

LOCATION: IN THE CITY AND COUNTY OF SAN FRANCISCO FROM YERBA BUENA TUNNEL TO 0.6 KM EAST OF THE YERBA BUENA TUNNEL

THIS CHANGE ORDER PROVIDES FOR:

compensating the Contractor for providing the labor, materials, and equipment necessary to remove and dispose of additional hazardous, Class II, and non-hazardous soil material to an appropriate disposal facility as authorized by the Engineer.

Removal and disposal of additional hazardous, Class II, and non-hazardous soil material will be performed in accordance with Sections 10-1.42 "Earthwork", 5-1.27 "Hazardous Material, General", of the Special Provisions, and Section 7-1.13 "Disposal of Material Outside the Highway Right of Way" of the Standard Specifications.

This work is not covered under the contract items. Therefore, this work will be performed under Extra Work at Force Account for an estimated cost of $100,000. Supplemental funds have been provided for the work of this change in the amount of $500,000.

Compensation for delays resulting from this work will be made in accordance with Section 8-1.09 "Right of Way Delays" of the Standard Specifications.

Any time adjustments relating to this work will be deferred as it may impact the controlling operation.
Design and Maintenance concurrence is not required as this work is anticipated by the contract documents.

On 10/28/05, Amer Bata, Area Construction Manager - SFOBB, and Lourdes David, Construction Engineer, granted District Prior Approval (C-93) of this change order.

CONCURRED BY:		
Construction Engineer:	Amer Bata, Construction Manager	Date
Bridge Engineer:		Date
FHWA Representative:		Date
Project Engineer:		Date
Other (specify):		Date
		Date
		Date
District Prior Approval By:	Amer Bata, Construction Manage	Date
HQ (Issue Approve) By:		Date
Resident Engineer's Signature:		Date 11/21/05

ESTIMATE OF COST

	THIS REQUEST	TOTAL TO DATE
ITEMS	$0.00	$0.00
FORCE ACCOUNT	$100,000.00	$100,000.00
AGREED PRICE	$0.00	$0.00
ADJUSTMENT	$0.00	$0.00
TOTAL	$100,000.00	$100,000.00

FEDERAL PARTICIPATION

☑ PARTICIPATING ☐ PARTICIPATING IN PART ☐ NONE
☐ NON-PARTICIPATING (MAINTENANCE) ☐ NON-PARTICIPATING

FEDERAL SEGREGATION (if more than one Funding Source or P.I.P. type)
☑ CCO FUNDED PER CONTRACT ☐ CCO FUNDED AS FOLLOWS

FEDERAL FUNDING SOURCE	PERCENT

STATE OF CALIFORNIA - DEPARTMENT OF TRANSPORTATION

CONTRACT CHANGE ORDER

Change Requested by: Engineer

CCO: 48	Suppl. No. 0	Contract No. 04 - 0120R4	Road SF-80-12.6/13.2	FED. AID LOC.: ACBRIM-080-1(097)N

To: **CC MYERS INC**

You are directed to make the following changes from the plans and specifications or do the following described work not included in the plans and specifications for this contract. ***NOTE: This change order is not effective until approved by the Engineer.***

Description of work to be done, estimate of quantities and prices to be paid. (Segregate between additional work at contract price, agreed price and force account.) Unless otherwise stated, rates for rental of equipment cover only such time as equipment is actually used and no allowance will be made for idle time. This last percentage shown is the net accumulated increase or decrease from the original quantity in the Engineer's Estimate.

Extra Work at Force Account:

In accordance with Section 19-1.04 'Removal and Disposal of Buried Man-Made Objects' and Section 7-1.13 'Disposal of Material Outside the Highway Right of Way' of the Standard Specifications, provide the labor, materials and equipment necessary to remove and dispose of buried man-made objects as authorized by the Engineer.

All work shall be performed in accordance with the Contract Plans, Contract Special Provisions, Standard Specifications, and the Standard Plans.

This work will be paid for in accordance with Section 5-1.24 "Force Account Payment" of the Special Provisions and Section 4-1.03D "Extra Work" of the Standard Specifications.

Compensation for delays resulting from this work will be made in accordance with Section 8-1.09 Right of Way Delays of the Standard Specifications.

Consideration of a time adjustment will be deferred until completion of work specified herein. Determination of a commensurate time extension will be made in accordance with Section 8-1.07 Liquidated Damages of the Standard Specifications.

Estimated cost of Extra Work at Force Account $50,000.00

RECEIVED
003703 FEB-1 06

Estimated Cost: **Increase** ☑ **Decrease** ☐ **$50,000.00**

By reason of this order the time of completion will be adjusted as follows: Deferred

Submitted by

Signature	Resident Engineer: LOURDES DAVID	Date 11/21/05

Approval Recommended by

Signature	Construction Engineer: LOURDES DAVID	Date 11/21/05

Engineer Approval by

Signature	(Print name and title) LOURDES DAVID - Construction Engineer	Date 12/6/05

We the undersigned contractor, have given careful consideration to the change proposed and agree, if this proposal is approved, that we will provide all equipment, furnish the materials, except as may otherwise be noted above, and perform all services necessary for the work above specified, and will accept as full payment therefor the prices shown above.

NOTE: If you, the contractor, do not sign acceptance of this order, your attention is directed to the requirements of the specifications as to proceeding with the ordered work and filing a written protest within the time therein specified.

Contractor Acceptance by

Signature	(Print name and title)	DEWEY C. LEE, JR. Contract Administrator	Date 11/30/05

STATE OF CALIFORNIA - DEPARTMENT OF TRANSPORTATION

CONTRACT CHANGE ORDER MEMORANDUM

TO: AMER BATA / LOURDES DAVID	FILE: **E.A.** 04 - 0120R4
FROM: LOURDES DAVID	**CO-RTE-PM** SF-80-12.6/13.2
	FED. NO. ACBRIM-080-1(097)N
CCO#: **48** SUPPLEMENT#: **0** Category Code: **ALZZ**	CONTINGENCY BALANCE (incl. this change) **$789,386.97**
COST: **$50,000.00** INCREASE ☑ DECREASE ☐	HEADQUARTERS APPROVAL REQUIRED? ☐ YES ☑ NO
SUPPLEMENTAL FUNDS PROVIDED: **$50,000.00**	IS THIS REQUEST IN ACCORDANCE WITH ENVIRONMENTAL DOCUMENTS? ☑ YES ☐ NO
CCO DESCRIPTION: Buried Man-Made Objects	**PROJECT DESCRIPTION:** CONSTRUCT ROUTE 80 TEMP BYPASS STRUCTURE

LOCATION: IN THE CITY AND COUNTY OF SAN FRANCISCO FROM YERBA BUENA TUNNEL TO 0.6 KM EAST OF THE YERBA BUENA TUNNEL

THIS CHANGE ORDER PROVIDES FOR:

Compensating the Contractor for the removal and disposal of Buried Man-Made Objects encountered on the jobsite as authorized by the Engineer in accordance with Section 19-1.04 Buried Man-Made Objects and Section 7-1.13 Disposal of Material Outside the Highway Right of Way of the Standard Specifications.

This contract requires that a Temporary Bypass Structure (TBS) be designed and constructed by the Contractor to detour traffic on the WB and EB Highway 80 between the eastern tunnel portal on Yerba Buena Island to Pier E1 on the San Francisco-Oakland Bay Bridge.

The location TBS alignment is within a region proviously occupied by the United States Navy and currently occupied by the United States Coast Guard. The region contains numerous abandoned in place underground utilities and buried abandoned building foundations. The fill overlaying the native ground contains rubble from previously demolished structures and foundations. During the placement of foundations for the TBS, these obstructions have been found which resulted in the necessity of their removal and in some instances modifications to the foundations.

Delays to the Contractor's operations which result from the removal and disposal of Buried Man-Made Objects will be compensated in accordance with Section 8-1.09 Right of Way Delays of the Standard Specifications.

This work is not covered under the contract items. Therefore, this work will be done under Extra Work at Force Account for an estimated total of $ 50,000.00. Supplemental Work funds have been allocated for this work totaling $ 200,000.00, as shown on the Detailed Estimate of Job Cost.

Trinh Lai, Project Engineer, concurs with this change. On November 14, 2005, Amer Bata, Area Construction Manager, granted District Prior Approval of this change order.

Maintenance concurrence is not required for this change as it does not impact the maintenance or serviceability of the structure.

Adjustment of contract time is deferred pending completion of the specified work as it may become the controlling operation.

CONCURRED BY:		
Construction Engineer:	Amer Bata	Date1/14/2005
Bridge Engineer:		Date
FHWA Representative:		Date
Project Engineer:	Trinh Lai	Date1/14/2005
Other (specify):		Date
		Date
		Date
District Prior Approval By:	Amer Bata	Date1/14/2005
HQ (Issue Approve) By:		Date
Resident Engineer's Signature:		Date 11/21/05

ESTIMATE OF COST

	THIS REQUEST	TOTAL TO DATE
ITEMS	$0.00	$0.00
FORCE ACCOUNT	$50,000.00	$50,000.00
AGREED PRICE	$0.00	$0.00
ADJUSTMENT	$0.00	$0.00
TOTAL	$50,000.00	$50,000.00

FEDERAL PARTICIPATION

☑ PARTICIPATING ☐ PARTICIPATING IN PART ☐ NONE
☐ NON-PARTICIPATING (MAINTENANCE) ☐ NON-PARTICIPATING

FEDERAL SEGREGATION (if more than one Funding Source or P.I.P. type)
☑ CCO FUNDED PER CONTRACT ☐ CCO FUNDED AS FOLLOWS

FEDERAL FUNDING SOURCE	PERCENT

STATE OF CALIFORNIA - DEPARTMENT OF TRANSPORTATION

CONTRACT CHANGE ORDER

Change Requested by: Engineer

CCO: 49	Suppl. No. 0	Contract No. 04 - 0120R4	Road SF-80-12.6/13.2	FED. AID LOC.: ACBRIM-080-1(097)N

To: **CC MYERS INC**

You are directed to make the following changes from the plans and specifications or do the following described work not included in the plans and specifications for this contract. ***NOTE: This change order is not effective until approved by the Engineer.***

Description of work to be done, estimate of quantities and prices to be paid. (Segregate between additional work at contract price, agreed price and force account.) Unless otherwise stated, rates for rental of equipment cover only such time as equipment is actually used and no allowance will be made for idle time. This last percentage shown is the net accumulated increase or decrease from the original quantity in the Engineer's Estimate.

Adjustment of Compensation at Lump Sum:

Conduct additional design analysis on the Viaduct segment of the proposed Temporary Bypass Structure for the following structural configurations:

- Bolted stringer to floorbeam connections with the bolts fully tensioned prior to placement of concrete deck surfacing but modeled as stringers simply supported between floor beams. The joint fixity assumptions shall be made consistent with the design model.

The analysis shall be completed by the generation of a full three dimensional (3-D) computer model that incorporates all the proposed stringers as individual members. This model shall be analyzed for the dead load and live load configurations utilized in the original design analysis. The analysis shall determine the overall effect on the floor beams, truss sections, and their connections. The demand to capacity (D/C) ratios shall be recorded for the moments in the stringers.

A final report shall be generated containing the results of the analytical model. The report shall provide a table of floorbeam and truss elements whose demand capacity ratios exceed the value of one (1). The report shall also contain an electronic copy of the 3-D model's working input and output files. No redesign work is required at this time.

No analysis or model modification/revisions will be required beyond the receipt of the final report as a part of this change.

For this work, the Contractor will be paid the sum of $ 109,182.80. This sum constitutes full compensation, including markups, for this change.

Total Cost of Adjustment of Compensation At Agreed Lump Sum $109,182.80

Estimated Cost: **Increase** ☑ **Decrease** ☐ **$109,182.80**

By reason of this order the time of completion will be adjusted as follows: 0 days

Submitted by

Signature	Resident Engineer: MAHANTESH ANIGOL	Date 4/11/06
M. U. Anigol		

Approval Recommended by

Signature	Construction Engineer: MAHANTESH ANIGOL	Date 4/11/06
M. U. Anigol		

Engineer Approval by

Signature	(Print name and title) RICK MORROW - Chief	Date 4/27/06
T. C. Morrow Chief		

We the undersigned contractor have given careful consideration to the change proposed and agree, if this proposal is approved, that we will provide all equipment, furnish the materials, except as may otherwise be noted above, and perform all services necessary for the work above specified, and will accept as full payment therefor the prices shown above.

NOTE: If you, the contractor, do not sign acceptance of this order, your attention is directed to the requirements of the specifications as to proceeding with the ordered work and filing a written protest within the time therein specified.

Contractor Acceptance by

Signature	(Print name and title)	Date
Dewey C Lee, Jr	DEWEY C. LEE, JR. Contract Administrator	4/19/06

OK per DH

STATE OF CALIFORNIA - DEPARTMENT OF TRANSPORTATION

CONTRACT CHANGE ORDER MEMORANDUM

TO: RICK MORROW / MAHANTESH ANIGOL	FILE: **E.A.** 04 - 0120R4
	CO-RTE-PM SF-80-12.6/13.2
FROM: MAHANTESH ANIGOL	**FED. NO.** ACBRIM-080-1(097)N
CCO#: **49** SUPPLEMENT#: **0** Category Code: **AWZZ**	CONTINGENCY BALANCE (incl. this change) **$2,866,905.39**
COST: **$109,182.80** INCREASE ☑ DECREASE ☐	HEADQUARTERS APPROVAL REQUIRED? ☐ YES ☑ NO
SUPPLEMENTAL FUNDS PROVIDED: **$109,182.80**	IS THIS REQUEST IN ACCORDANCE WITH ENVIRONMENTAL DOCUMENTS? ☑ YES ☐ NO
CCO DESCRIPTION: Viaduct- Stringer Floorbean Design Study	**PROJECT DESCRIPTION:** CONSTRUCT ROUTE 80 TEMP BYPASS STRUCTURE

LOCATION: IN THE CITY AND COUNTY OF SAN FRANCISCO FROM YERBA BUENA TUNNEL TO 0.6 KM EAST OF THE YERBA BUENA TUNNEL

THIS CHANGE ORDER PROVIDES FOR:

conducting additional design analysis upon the Viaduct segment of the proposed Temporary Bypass Structure utilizing the structural configuration as detailed in the text of the Change Order document.

This Contract requires that a temporary bypass structure (TBS) be designed and constructed by the Contractor to detour traffic on westbound and eastbound Highway 80 between the eastern portal of the tunnel on Yerba Buena Island to Pier E-1 on the San Francisco-Oakland Bay Bridge. It is being completed as one segment of the New East Span corridor. The completed structure will allow a future transition structure to be built tying in the New East Span to the existing. The Contractor's Engineer is responsible for completing the design of the various segments of the TBS and submits these packages to the State for authorization for construction. By submitting these documents, the Contractor's Engineer acknowledges that the packages are complete and constructible.

The Engineer is requesting that an additional analysis of the stringer to floorbeam connections on the Viaduct segment of the TBS be performed. The Contractor's current design reflects but one way of satisfying the contract requirements. This work is being completed as a study for the Engineer to make a determination regarding an enhancement to the design. Currently, the Contractor's Engineer has designed the bolted stringer to floor beam connection to move during deck casting by incorporating a slotted hole on one side of the stringer connection. The bolts are partially tensioned prior to deck casting and then fully tensioned only after the deck concrete is in place. The State's Design Review Team positions that this connection detail does not provide sufficient tolerances to address allowable industry standards for fabrication tolerances nor do the submitted Supplemental Technical Special Provisions adequately address this issue. As this is not a clearly definitive issue, the State is requesting that this study be performed to determine the effects of fully tensioning the bolted connections prior to casting of the deck. The Design Review Team believes that this method of installation will resolve the design and tolerance issues regarding the stringer floor beam connection. The State cannot complete this analysis as the design is the responsibility of the Contractor's Engineer. The impact of the results of this study shall be determined at a later date.

Dan Adams, Design Engineer, Trinh Lai, Project Engineer, and Robert Kobal, Headquarters' Assistant Construction Coordinator, concur with this change.

Maintenance concurrence is not required, as this work does not affect the maintenance of the structure.

Compensation for this work will be at Adjustment of Compensation at the Agreed Lump Sum of $ 109,182.80, which can be financed from the contingency fund. A detailed cost analysis is on file.

No adjustment of contract time is warranted by this change, as it does not affect the controlling operation.

CONTRACT CHANGE ORDER MEMORANDUM

CONCURRED BY:	
Construction Engineer: Mahantesh Anigol	Date 4/11/06
Bridge Engineer:	Date
FHWA Representative:	Date
Project Engineer: Trinh Lai	Date3/28/2006
Other (specify): Dan Adams, OSD	Date3/15/2006
Robert Kobal, HQ Asst. Contruction Coordinator	Date3/30/2006
	Date
District Prior Approval By:	Date
HQ (Issue Approve) By:	Date
Resident Engineer's Signature: M. M. Anigol	Date 4/11/06

ESTIMATE OF COST

	THIS REQUEST	TOTAL TO DATE
ITEMS	$0.00	$0.00
FORCE ACCOUNT	$0.00	$0.00
AGREED PRICE	$0.00	$0.00
ADJUSTMENT	$109,182.80	$109,182.80
TOTAL	$109,182.80	$109,182.80

FEDERAL PARTICIPATION

☑ PARTICIPATING ☐ PARTICIPATING IN PART ☐ NONE
☐ NON-PARTICIPATING (MAINTENANCE) ☐ NON-PARTICIPATING

FEDERAL SEGREGATION (if more than one Funding Source or P.I.P. type)
☑ CCO FUNDED PER CONTRACT ☐ CCO FUNDED AS FOLLOWS

FEDERAL FUNDING SOURCE	PERCENT

CONTRACT CHANGE ORDER

Change Requested by: Engineer

CCO: 49	Suppl. No. 1	Contract No. 04 - 0120R4	Road SF-80-12.6/13.2	FED. AID LOC.: ACBRIM-080-1(097)N

To: **CC MYERS INC**

You are directed to make the following changes from the plans and specifications or do the following described work not included in the plans and specifications for this contract. ***NOTE: This change order is not effective until approved by the Engineer.***

Description of work to be done, estimate of quantities and prices to be paid. (Segregate between additional work at contract price, agreed price and force account.) Unless otherwise stated, rates for rental of equipment cover only such time as equipment is actually used and no allowance will be made for idle time. This last percentage shown is the net accumulated increase or decrease from the original quantity in the Engineer's Estimate.

Extra Work at Force Account:

Revise the Viaduct stringer to floor beam connections based upon the results of the design study completed under CCO 49. The bolted connections shall be fully tensioned, where possible, prior to deck concrete placement and standard sized bolt holes shall be utilized where applicable.

Perform and submit a complete design and check analysis including revised plan sheets in accordance with the requirements of Special Provisions Section 5-1.14, "Contractor Design," subsection, "Final Design Submittal." The revised stringer floorbeam connection, and any affected portion of the Viaduct segment structure shall be designed to satisfy the Design Criteria contained within the Contract plans. This design submittal package, including functional electronic input and output files, shall be submitted for acceptance, and review for authorization for construction.

The Contractor shall develop a task list and meet with the State to determine the process by which the work is to be executed. This task list may be revised by the State based upon the results of the incrementally completed design tasks.

The Contractor shall submit biweekly invoices for payments of services that shall be certified for completeness and accuracy by an authorized representative of the Contractor's Engineer. These documents may be subject to audit.

The total cost or credit of implementing this change in the field is deferred until completion of the design.

Consideration of a time adjustment will be deferred until completion of work specified herein. Determination of a commensurate time extension will be made in accordance with Section 8-1.07 Liquidated Damages of the Standard Specifications.

All work shall be performed in accordance with the Contract Plans, Contract Special Provisions, Standard Specifications, and the Standard Plans.

Estimated cost of Extra Work at Force Account $150,000.00

CONTRACT CHANGE ORDER

Change Requested by: Engineer

CCO: 49	Suppl. No. 1	Contract No. 04 - 0120R4	Road SF-80-12.6/13.2	FED. AID LOC.: ACBRIM-080-1(097)N

Estimated Cost: Increase ☑ Decrease ☐ **$150,000.00**

By reason of this order the time of completion will be adjusted as follows: Deferred

Submitted by

Signature	Resident Engineer: MAHANTESH ANIGOL	Date 7/5/06

Approval Recommended by

Signature	Construction Engineer: MAHANTESH ANIGOL	Date 7/5/06

Engineer Approval by

Signature	(Print name and title) JASON TOM - Chief	Date 8/3/06

We the undersigned contractor, have given careful consideration to the change proposed and agree, if this proposal is approved, that we will provide all equipment, furnish the materials, except as may otherwise be noted above, and perform all services necessary for the work above specified, and will accept as full payment therefor the prices shown above.

NOTE: If you, the contractor, do not sign acceptance of this order, your attention is directed to the requirements of the specifications as to proceeding with the ordered work and filing a written protest within the time therein specified.

Contractor Acceptance by

Signature	(Print name and title) DANIEL E. HUMICK, PRESIDENT	Date 7/11/06

STATE OF CALIFORNIA - DEPARTMENT OF TRANSPORTATION

CONTRACT CHANGE ORDER MEMORANDUM

TO: RICK MORROW / MAHANTESH ANIGOL	FILE: **E.A.** 04 - 0120R4
FROM: MAHANTESH ANIGOL	**CO-RTE-PM** SF-80-12.6/13.2
	FED. NO. ACBRIM-080-1(097)N
CCO#: **49** SUPPLEMENT#: **1** Category Code: **AWZZ**	CONTINGENCY BALANCE (incl. this change) **$2,756,521.27**
COST: **$150,000.00** INCREASE ☑ DECREASE ☐	HEADQUARTERS APPROVAL REQUIRED? ☐ YES ☑ NO
SUPPLEMENTAL FUNDS PROVIDED: **$65,000.00**	IS THIS REQUEST IN ACCORDANCE WITH ENVIRONMENTAL DOCUMENTS? ☑ YES ☐ NO
CCO DESCRIPTION: Viaduct-Stringer Floorbeam Design Study	**PROJECT DESCRIPTION:** CONSTRUCT ROUTE 80 TEMP BYPASS STRUCTURE

LOCATION: IN THE CITY AND COUNTY OF SAN FRANCISCO FROM YERBA BUENA TUNNEL TO 0.6 KM EAST OF THE YERBA BUENA TUNNEL

THIS CHANGE ORDER PROVIDES FOR:

Revising the Viaduct stringer to floor beam connections based upon the analysis assumptions of the design study completed under CCO 49. The bolted connections shall be fully tensioned prior to deck concrete placement and standard sized bolt holes shall be utilized. Perform and submit a complete design and check analysis including revised plan sheets in accordance with the requirements of Special Provisions Section 5-1.14, "Contractor Design," subsection, "Final Design Submittal.".

This Contract requires that a temporary bypass structure (TBS) be designed and constructed by the Contractor to detour traffic on westbound and eastbound Highway 80 between the eastern portal of the tunnel on Yerba Buena Island to Pier E-1 on the San Francisco-Oakland Bay Bridge. It is being completed as one segment of the New East Span corridor. The completed structure will allow a future transition structure to be built tying in the New East Span to the existing. The Contractor's Engineer is responsible for completing the design of the various segments of the TBS and submits these packages to the State for authorization for construction.

HQ Design is requesting that the stringer to floor beam connection details be revised per the results of the design study completed on CCO 49. This change is considered an enhancement to the overall design and is necessary to provide for extended service life and to improve seismic safety.

The design work will proceed incrementally and the State will be providing direction at each phase of the design requiring flexibility in defining the work tasks. Therefore, this work will be done under extra work at force account for an estimated cost of $ 150,000.00, which can be financed in part from existing supplemental work funds and the remaining balance from the contingency funds available for this project.

The total cost or credit of implementing this change in the field is deferred until completion of the design.

Dan Adams - Design Engineer, Trinh Lai - Project Engineer, concur with this change.

Maintenance concurrence is not required, as this work does not affect the maintenance of the structure.

Any time adjustments relating to this work will be deferred as it may impact the controlling operation.

This Table is provided to depict the status of the Design Enhancement work allotted by the Contract's Supplemental Funds.

CCO No.	Description	Value
49	Design Study of Stringer to Floorbeam connections	$ 109,182.80
50	Viaduct Enhancements	$ 325,000.00
49 Sup 1	Design of Stringer to Floorbeam connections	$ 150,000.00
Summary		$ 584,182.80
Supplemental Funds Allotment		$ 500,000.00
Upper Threshold Before HQ Approval required		$ 700,000.00

CONCURRED BY:		
Construction Engineer:	Mahantesh Anigol	Date 8/3/06
Bridge Engineer:		Date
FHWA Representative:		Date
Project Engineer:	Trinh Lai, Project Engineer	Date6/30/2006
Other (specify): Gary Lai, Struc. Representative		Date 7/5/2006
Dan Adams, Design Engineer		Date 7/5/2006
		Date
District Prior Approval By:		Date
HQ (Issue Approve) By:		Date
Resident Engineer's Signature: M U. Anigol		Date 8/3/06

ESTIMATE OF COST

	THIS REQUEST	TOTAL TO DATE
ITEMS	$0.00	$0.00
FORCE ACCOUNT	$150,000.00	$150,000.00
AGREED PRICE	$0.00	$0.00
ADJUSTMENT	$0.00	$109,182.80
TOTAL	$150,000.00	$259,182.80

FEDERAL PARTICIPATION

☑ PARTICIPATING ☐ PARTICIPATING IN PART ☐ NONE
☐ NON-PARTICIPATING (MAINTENANCE) ☐ NON-PARTICIPATING

FEDERAL SEGREGATION (if more than one Funding Source or P.I.P. type)
☑ CCO FUNDED PER CONTRACT ☐ CCO FUNDED AS FOLLOWS

FEDERAL FUNDING SOURCE	PERCENT

CONTRACT CHANGE ORDER

Change Requested by: Engineer

CCO 49	Suppl. No. 2	Contract No. 04 - 0120R4	Road SF-80-12.6/13.2	FED. AID LOC.: ACBRIM-080-1(097)N

To: **CC MYERS INC**

You are directed to make the following changes from the plans and specifications or do the following described work not included in the plans and specifications for this contract. ***NOTE: This change order is not effective until approved by the Engineer.***

Description of work to be done, estimate of quantities and prices to be paid. (Segregate between additional work at contract price, agreed price and force account.) Unless otherwise stated, rates for rental of equipment cover only such time as equipment is actually used and no allowance will be made for idle time. This last percentage shown is the net accumulated increase or decrease from the original quantity in the Engineer's Estimate.

Extra Work at Force Account:

Additional funds to revise the Viaduct stringer to floor beam connections based upon the results of the design study completed under CCO 49 and CCO 49 S1. The bolted connections shall be fully tensioned, where possible, prior to deck concrete placement and standard sized bolt holes shall be utilized where applicable.

Additional funds to perform and submit a complete design and check analysis including revised plan sheets in accordance with the requirements of Special Provisions Section 5-1.14, "Contractor Design," subsection, "Final Design Submittal." The revised stringer floorbeam connection, and any affected portion of the Viaduct segment structure shall be designed to satisfy the Design Criteria contained within the Contract plans. This design submittal package, including functional electronic input and output files, shall be submitted for acceptance, and review for authorization for construction.

The Contractor shall develop a task list and meet with the State to determine the process by which the work is to be executed. This task list may be revised by the State based upon the results of the incrementally completed design tasks.

The Contractor shall submit biweekly invoices for payments of services that shall be certified for completeness and accuracy by an authorized representative of the Contractor's Engineer. These documents may be subject to audit.

The total cost or credit of implementing this change in the field is deferred until completion of the design.

Consideration of a time adjustment will be deferred until completion of work specified herein. Determination of a commensurate time extension will be made in accordance with Section 8-1.07 Liquidated Damages of the Standard Specifications.

All work shall be performed in accordance with the Contract Plans, Contract Special Provisions, Standard Specifications, and the Standard Plans.

Estimated cost of Extra Work at Force Account $100,000.00

CONTRACT CHANGE ORDER

Change Requested by: Engineer

CCO 49	Suppl. No. 2	Contract No. 04 - 0120R4	Road SF-80-12.6/13.2	FED. AID LOC.: ACBRIM-080-1(097)N

Estimated Cost: Increase ☑ Decrease ☐ $100,000.00

By reason of this order the time of completion will be adjusted as follows: Deferred

Submitted by

Signature M. U. Anigol	Resident Engineer: MAHANTESH ANIGOL	Date 12/7/06

Approval Recommended by

Signature	Construction Engineer: JASON TOM	Date 12/7/06 ~~12/11/06~~

Engineer Approval by

Signature	(Print name and title) JASON TOM - Chief	Date 12/14/06

We the undersigned contractor, have given careful consideration to the change proposed and agree, if this proposal is approved, that we will provide all equipment, furnish the materials, except as may otherwise be noted above, and perform all services necessary for the work above specified, and will accept as full payment therefor the prices shown above.

NOTE: If you, the contractor, do not sign acceptance of this order, your attention is directed to the requirements of the specifications as to proceeding with the ordered work and filing a written protest within the time therein specified.

Contractor Acceptance by

Signature NOT APPLICABLE	(Print name and title)	Date

STATE OF CALIFORNIA - DEPARTMENT OF TRANSPORTATION

RECEIVED

CONTRACT CHANGE ORDER MEMORANDUM

DATE: 12/5/2006

004849 JAN-3

TO: PETER SIEGENTHALER / JASON TOM	FILE: **E.A.** 04 - 0120R4
	CO-RTE-PM SF-80-12.6/13.2
FROM: MAHANTESH ANIGOL	**FED. NO.** ACBRIM-080-1(097)N
CCO#: **49** SUPPLEMENT#: **2** Category Code: **AWZZ**	CONTINGENCY BALANCE (incl. this change) **$1,118,029.81**
COST: **$100,000.00** INCREASE ☑ DECREASE ☐	HEADQUARTERS APPROVAL REQUIRED? ☑ YES ☑ NO
SUPPLEMENTAL FUNDS PROVIDED: **$0.00**	IS THIS REQUEST IN ACCORDANCE WITH ENVIRONMENTAL DOCUMENTS? ☑ YES ☐ NO
CCO DESCRIPTION: Viaduct-Stringer Floorbeam Design Study	**PROJECT DESCRIPTION:** CONSTRUCT ROUTE 80 TEMP BYPASS STRUCTURE

Original Contract Time:	Time Adj. This Change:	Previously Approved CCO Time Adjustments:	Percentage Time Adjusted: (including this change)	Total # of Unreconciled Deferred Time CCO(s): (including this change)
475 Day(s)	**DEF** Day(s)	**381** Day(s)	**80** %	**7**

THIS CHANGE ORDER PROVIDES FOR:

Additional funds to revise the Viaduct stringer to floor beam connections based upon the analysis assumptions of the design study completed under CCO 49 and CCO 49 S1. The bolted connections shall be fully tensioned prior to deck concrete placement and standard sized bolt holes shall be utilized. Additional funds to perform and submit a complete design and check analysis including revised plan sheets in accordance with the requirements of Special Provisions Section 5-1.14, "Contractor Design," subsection, "Final Design Submittal.".

This Contract requires that a temporary bypass structure (TBS) be designed and constructed by the Contractor to detour traffic on westbound and eastbound Highway 80 between the eastern portal of the tunnel on Yerba Buena Island to Pier E-1 on the San Francisco-Oakland Bay Bridge. It is being completed as one segment of the New East Span corridor. The completed structure will allow a future transition structure to be built tying in the New East Span to the existing. The Contractor's Engineer is responsible for completing the design of the various segments of the TBS and submits these packages to the State for authorization for construction.

HQ Design is requesting that the stringer to floor beam connection details be revised per the results of the design study completed on CCO 49 and CCO 49 S1. This change is considered an enhancement to the overall design and is necessary to provide for extended service life and to improve seismic safety.

The design work will proceed incrementally and the State will be providing direction at each phase of the design requiring flexibility in defining the work tasks. Therefore, this work will be done under extra work at force account for an estimated cost of $ 100,000.00, which can be financed from existing contingency funds available for this project.

The Contractor's signature is not required for additional funds for Extra Work at Force Account change orders. Therefore this change order is being issued unilaterally.

The total cost or credit of implementing this change in the field is deferred until completion of the design.

Dan Adams - Design Engineer, Trinh Lai - Project Engineer, and Ken Terpstra - Project Manager concur with this change. HQ CCO Desk provided I & A approval of this change on 12/08/06.

Maintenance concurrence is not required, as this work does not affect the maintenance of the structure.

Any time adjustments relating to this work will be deferred as it may impact the controlling operation.

This Table is provided to depict the status of the Design Enhancement work allotted by the Contract's Supplemental Funds.

CCO No.	Description	Value
49	Design Study of Stringer to Floorbeam connections	$ 109,182.80
50	Viaduct Enhancements	$ 325,000.00
50 Sup 1	Viaduct Enhancements	$ 300,000.00
49 Sup 1	Design of Stringer to Floorbeam connections	$ 150,000.00
49 Sup 2	Design of Stringer to Floorbeam connections	$ 100,000.00

ADA Notice: For individuals with sensory disabilities, this document is available in alternate formats. For information call: (916) 654-6410 or TDD (916) 654-3880 or write Records and Forms Management, 1120 N Street, MS-89, Sacramento, CA 95814.

49.4952.01

Total	$ 984,182.80
Supplemental Funds Allotment	$ 500,000.00
Upper Threshold Before HQ Approval required	$ 700,000.00

CONCURRED BY:			
Construction Engineer:	Mahantesh Anigol, Resident Engin	Date	12/14/06
Bridge Engineer:		Date	
Project Engineer:	Trinh Lai	Date	12/4/06
Project Manager:	Ken Terpstra, Project Manager	Date	12/7/06
FHWA Rep.:		Date	
Environmental:		Date	
Other (specify):	Gary Lai, Struc. Representative	Date	12/4/06
Other (specify):	Dan Adams, Office of Structures D	Date	12/4/06
District Prior Approval By:		Date	
HQ (Issue Approve) By:		Date	
Resident Engineer's Signature:	M. A. Anigol	Date	12/14/06

ESTIMATE OF COST

	THIS REQUEST	TOTAL TO DATE
ITEMS	$0.00	$0.00
FORCE ACCOUNT	$100,000.00	$250,000.00
AGREED PRICE	$0.00	$0.00
ADJUSTMENT	$0.00	$109,182.80
TOTAL	$100,000.00	$359,182.80

FEDERAL PARTICIPATION

☐ PARTICIPATING ☐ PARTICIPATING IN PART ☑ NONE
☐ NON-PARTICIPATING (MAINTENANCE) ☐ NON-PARTICIPATING

FEDERAL SEGREGATION (if more than one Funding Source or P.I.P. type)
☑ CCO FUNDED PER CONTRACT ☐ CCO FUNDED AS FOLLOWS

FEDERAL FUNDING SOURCE	PERCENT

ADA Notice: For individuals with sensory disabilities, this document is available in alternate formats. For information call: (916) 654-6410 or TDD (916) 654-3880 or write Records and Forms Management, 1120 N Street, MS-89, Sacramento, CA 95814.

CONTRACT CHANGE ORDER

Change Requested by: Engineer

CCO: 50	Suppl. No. 0	Contract No. 04 - 0120R4	Road SF-80-12.6/13.2	FED. AID LOC.: ACBRIM-080-1(097)N

To: **CC MYERS INC**

You are directed to make the following changes from the plans and specifications or do the following described work not included in the plans and specifications for this contract. ***NOTE: This change order is not effective until approved by the Engineer.***

Description of work to be done, estimate of quantities and prices to be paid. (Segregate between additional work at contract price, agreed price and force account.) Unless otherwise stated, rates for rental of equipment cover only such time as equipment is actually used and no allowance will be made for idle time. This last percentage shown is the net accumulated increase or decrease from the original quantity in the Engineer's Estimate.

Extra Work at Force Account:

Revise the currently proposed Viaduct segment design to stand alone and be de-coupled from the East Tie-In structure. The boundary conditions at Bents 48 and 52 shall assume no participation between the Viaduct and the West and East Tie-Ins. Perform additional exploratory, design, and check analysis as directed by the State's Engineer to complete this task.

Provide for the following enhancements to the current design:

* Provide connectivity in the form of structural steel struts or concrete bent caps between the columns located at Bents 49, 50, 51, & 52. Incorporate findings as applicable from the Design Study report generated by previous CCO 30.

* Provide additional support between the trusses and the top of columns 49, 50, 51, & 52 to prevent the truss chords from dropping vertically if the bearing keeper system shears off and fails.

The analysis shall be based on the three dimensional (3-D) computer model generated for CCO 49. The Contractor shall develop a task list for each request and coordinate with the Engineer to determine the process by which the work is to be executed. Each request shall be pre-approved by the States's Engineer prior to beginning work.

The foundation and substructure designs shall be re-analyzed based upon the directed changes.

The Contractor shall submit detailed biweekly invoices for payment of services.

Consideration of a time adjustment will be deferred until completion of work specified herein. Determination of a commensurate time extension will be made in accordance with Section 8-1.07 Liquidated Damages of the Standard Specifications.

Estimated cost of Extra Work at Force Account $325,000.00

CONTRACT CHANGE ORDER

Change Requested by: Engineer

CCO: 50	Suppl. No. 0	Contract No. 04 - 0120R4	Road SF-80-12.6/13.2	FED. AID LOC.: ACBRIM-080-1(097)N

Estimated Cost: Increase ☑ Decrease ☐ **$325,000.00**

By reason of this order the time of completion will be adjusted as follows: Deferred

Submitted by

Signature	Resident Engineer: MAHANTESH ANIGOL	Date
M. U. Anigol		04/19/06

Approval Recommended by

Signature	Construction Engineer: MAHANTESH ANIGOL	Date
M. U. Anigol		4/19/06

Engineer Approval by

Signature	(Print name and title)	Date
	RICK MORROW - Chief	5/5/06

We the undersigned contractor, have given careful consideration to the change proposed and agree, if this proposal is approved, that we will provide all equipment, furnish the materials, except as may otherwise be noted above, and perform all services necessary for the work above specified, and will accept as full payment therefor the prices shown above.

NOTE: If you, the contractor, do not sign acceptance of this order, your attention is directed to the requirements of the specifications as to proceeding with the ordered work and filing a written protest within the time therein specified.

Contractor Acceptance by

Signature	(Print name and title)	Date
Dewey C Lee, Jr	DEWEY C. LEE, JR. Contract Administrator	4/28/06

STATE OF CALIFORNIA - DEPARTMENT OF TRANSPORTATION

CONTRACT CHANGE ORDER MEMORANDUM

TO: RICK MORROW / MAHANTESH ANIGOL	FILE: **E.A.** 04 - 0120R4
	CO-RTE-PM SF-80-12.6/13.2
FROM: MAHANTESH ANIGOL	**FED. NO.** ACBRIM-080-1(097)N
CCO#: **50** SUPPLEMENT#: **0** Category Code: **AWZZ**	CONTINGENCY BALANCE (incl. this change) **$2,866,905.39**
COST: **$325,000.00** INCREASE ☑ DECREASE ☐	HEADQUARTERS APPROVAL REQUIRED? ☐ YES ☑ NO
SUPPLEMENTAL FUNDS PROVIDED: **$325,000.00**	IS THIS REQUEST IN ACCORDANCE WITH ENVIRONMENTAL DOCUMENTS? ☑ YES ☐ NO
CCO DESCRIPTION: Viaduct Design Enhancements	**PROJECT DESCRIPTION:** CONSTRUCT ROUTE 80 TEMP BYPASS STRUCTURE

LOCATION: IN THE CITY AND COUNTY OF SAN FRANCISCO FROM YERBA BUENA TUNNEL TO 0.6 KM EAST OF THE YERBA BUENA TUNNEL

THIS CHANGE ORDER PROVIDES FOR:

Revising the current Viaduct Design to stand alone and be de-coupled from the East Tie-In structure and to provide for specific enhancements to the current design as detailed in the CCO.

This Contract requires that a temporary bypass structure (TBS) be designed and constructed by the Contractor to detour traffic on westbound and eastbound Highway 80 between the eastern portal of the tunnel on Yerba Buena Island to Pier E-1 on the San Francisco-Oakland Bay Bridge (SFOBB). The completed structure will allow a future permanent transition structure to be built tying in the New East Span to the existing. It is being completed as one segment of the New East Span corridor.

At the time of bid opening, the TBS was to have been completed within a short time period and be in service for two to three years. Due to changes in other East Span projects, the corridor schedule has been extended, and traffic will be on the detour longer than originally intended. To alleviate the burden upon the traveling public with reduced traffic lanes, construction work on the Tie-In segments will continue to be suspended until the corridor schedule is finalized.

All work is continuing to proceed with the design of the TBS segments and construction has proceeded with the Viaduct foundations and columns.

The requested enhancements are necessary as the Viaduct segment will be constructed ahead of the remaining segments and will need to stand alone for a period of one to two years. The current Viaduct design relies upon the East Tie-In for stability. Additional redundancy will also be included by means of this change to provide for extended service life and to improve seismic and wind response.

The design work will proceed incrementally with the State providing direction at each step. Therefore, this work will be done under extra work at force account for an estimated cost of $ 325,000.00, which can be financed from the project supplemental work funds.

Dan Adams - Design Engineer, Trinh Lai - Project Engineer, and Robert Kobal - Headquarters' Assistant Construction Coordinator concur with this change. Nancy Bobb - FHWA, granted Prior Approval of this change order on 4/13/06. HQ CCO Issue & Approve was not necessary as this change order will utilize existing Supplemental Work Funds.

Maintenance concurrence is not required, as this work does not affect the maintenance of the structure.

Any time adjustments relating to this work will be deferred as it may impact the controlling operation.

RECEIVED
2006 MAY 17 PM 1:09

CONCURRED BY:		
Construction Engineer:	Mahantesh Anigol, RE	Date 4/19/06
Bridge Engineer:	Dan Adams, Office Structure Desig	Date4/13/2006
FHWA Representative:		Date
Project Engineer:	Trinh Lai, Project Engineer	Date4/13/2006
Other (specify): Robert Kobal, HQ Asst. Contruction Coordinator		Date4/13/2006
Nancy Bobb, FHWA		Date 4/13/06
		Date
District Prior Approval By:	Rick Morrow, SFOBB Constructio	Date4/13/2006
HQ (Issue Approve) By:	Ken Darby, HQ CCO Desk	Date n/a
Resident Engineer's Signature: M-U-Anigol		Date 4/19/06

ESTIMATE OF COST

	THIS REQUEST	TOTAL TO DATE
ITEMS	$0.00	$0.00
FORCE ACCOUNT	$325,000.00	$325,000.00
AGREED PRICE	$0.00	$0.00
ADJUSTMENT	$0.00	$0.00
TOTAL	$325,000.00	$325,000.00

FEDERAL PARTICIPATION

☑ PARTICIPATING ☐ PARTICIPATING IN PART ☐ NONE
☐ NON-PARTICIPATING (MAINTENANCE) ☐ NON-PARTICIPATING

FEDERAL SEGREGATION (if more than one Funding Source or P.I.P. type)
☑ CCO FUNDED PER CONTRACT ☐ CCO FUNDED AS FOLLOWS

FEDERAL FUNDING SOURCE	PERCENT

CONTRACT CHANGE ORDER

Change Requested by: Engineer

CCO: 50	Suppl. No. 1	Contract No. 04 - 0120R4	Road SF-80-12.6/13.2	FED. AID LOC.: ACBRIM-080-1(097)N

To: **CC MYERS INC**

You are directed to make the following changes from the plans and specifications or do the following described work not included in the plans and specifications for this contract. ***NOTE: This change order is not effective until approved by the Engineer.***

Description of work to be done, estimate of quantities and prices to be paid. (Segregate between additional work at contract price, agreed price and force account.) Unless otherwise stated, rates for rental of equipment cover only such time as equipment is actually used and no allowance will be made for idle time. This last percentage shown is the net accumulated increase or decrease from the original quantity in the Engineer's Estimate.

Extra Work at Force Account:

Provide additional funds to revise the currently proposed Viaduct segment design to stand alone and be de-coupled from the East Tie-In structure. The boundary conditions at Bents 48 and 52 shall assume no participation between the Viaduct and the West and East Tie-Ins. Perform additional exploratory, design, and check analysis as directed by the State's Engineer to complete this task.

Provide for the following enhancements to the current design:

* Provide connectivity in the form of structural steel struts or concrete bent caps between the columns located at Bents 49, 50, 51, & 52. Incorporate findings as applicable from the Design Study report generated by previous CCO 30.

* Provide additional support between the trusses and the top of columns 49, 50, 51, & 52 to prevent the truss chords from dropping vertically if the bearing keeper system shears off and fails.

The analysis shall be based on the three dimensional (3-D) computer model generated for CCO 49. The Contractor shall develop a task list for each request and coordinate with the Engineer to determine the process by which the work is to be executed. Each request shall be pre-approved by the States's Engineer prior to beginning work.

The foundation and substructure designs shall be re-analyzed based upon the directed changes.

The Contractor shall submit detailed biweekly invoices for payment of services.

Consideration of a time adjustment will be deferred until completion of work specified herein. Determination of a commensurate time extension will be made in accordance with Section 8-1.07 Liquidated Damages of the Standard Specifications.

Estimated cost of Extra Work at Force Account $300,000.00

CONTRACT CHANGE ORDER

Change Requested by: Engineer

CCO: 50	Suppl. No. 1	Contract No. 04 - 0120R4	Road SF-80-12.6/13.2	FED. AID LOC.: ACBRIM-080-1(097)N

Estimated Cost: Increase ☑ Decrease ☐ **$300,000.00**

By reason of this order the time of completion will be adjusted as follows: Deferred

Submitted by

Signature	Resident Engineer: MAHANTESH ANIGOL	Date 10/6/06

Approval Recommended by

Signature	Construction Engineer: MAHANTESH ANIGOL	Date 10/6/06

Engineer Approval by

Signature	(Print name and title) JASON TOM - Chief	Date 10/12/06

We the undersigned contractor, have given careful consideration to the change proposed and agree, if this proposal is approved, that we will provide all equipment, furnish the materials, except as may otherwise be noted above, and perform all services necessary for the work above specified, and will accept as full payment therefor the prices shown above.

NOTE: If you, the contractor, do not sign acceptance of this order, your attention is directed to the requirements of the specifications as to proceeding with the ordered work and filing a written protest within the time therein specified.

Contractor Acceptance by

Signature	(Print name and title)	Date
Not Applicable.		

STATE OF CALIFORNIA - DEPARTMENT OF TRANSPORTATION

CONTRACT CHANGE ORDER MEMORANDUM

DATE: 9/15/2006

TO: JASON TOM / MAHANTESH ANIGOL	FILE: **E.A.** 04 - 0120R4
	CO-RTE-PM SF-80-12.6/13.2
FROM: MAHANTESH ANIGOL	**FED. NO.** ACBRIM-080-1(097)N
CCO#: **50** SUPPLEMENT#: **1** Category Code: **AWZZ**	CONTINGENCY BALANCE (incl. this change) **$1,468,995.58**
COST: **$300,000.00** INCREASE ☑ DECREASE ☐	HEADQUARTERS APPROVAL REQUIRED? ☑ YES ☐ NO
SUPPLEMENTAL FUNDS PROVIDED: **$0.00**	IS THIS REQUEST IN ACCORDANCE WITH ENVIRONMENTAL DOCUMENTS? ☑ YES ☐ NO
CCO DESCRIPTION: Viaduct Design Enhancements	**PROJECT DESCRIPTION:** CONSTRUCT ROUTE 80 TEMP BYPASS STRUCTURE

LOCATION: IN THE CITY AND COUNTY OF SAN FRANCISCO FROM YERBA BUENA TUNNEL TO 0.6 KM EAST OF THE YERBA BUENA TUNNEL

THIS CHANGE ORDER PROVIDES FOR:

Providing additional funds for revising the current Viaduct Design to stand alone and be de-coupled from the East Tie-In structure and to provide for specific enhancements to the current design as detailed in the original CCO 50.

This Contract requires that a temporary bypass structure (TBS) be designed and constructed by the Contractor to detour traffic on westbound and eastbound Highway 80 between the eastern portal of the tunnel on Yerba Buena Island to Pier E-1 on the San Francisco-Oakland Bay Bridge (SFOBB). The completed structure will allow a future permanent transition structure to be built tying in the New East Span to the existing. It is being completed as one segment of the New East Span corridor.

At the time of bid opening, the TBS was to have been completed within a short time period and be in service for two to three years. Due to changes in other East Span projects, the corridor schedule has been extended, and traffic will be on the detour longer than originally intended. To alleviate the burden upon the traveling public with reduced traffic lanes, construction work on the Tie-In segments will continue to be suspended until the corridor schedule is finalized.

All work is continuing to proceed with the design of the TBS segments and construction has proceeded with the Viaduct foundations and columns.

The requested enhancements are necessary as the Viaduct segment will be constructed ahead of the remaining segments and will need to stand alone for a period of one to two years. The current Viaduct design relies upon the East Tie-In for stability. Additional redundancy will also be included by means of this change to provide for extended service life and to improve seismic and wind response.

Under the original CCO 50, the design work was to proceed incrementally with the State providing direction at each step. The State had underestimated the amount of time to complete this design. Therefore, this work will be done under extra work at force account for an estimated cost of $ 300,000.00, which can be financed from the project's contingency funds. The original CCO 50 was financed with the project's supplemental works funds, which have all been used.

The Contractor's signature is not required for additional funds for Extra Work at Force Account change orders. Therefore this change order is being issued unilaterally.

Dan Adams - Design Engineer and Trinh Lai - Project Engineer, concur with this change. FHWA Prior Approval no longer required as federal authorization for this project has been officially withdrawn.

Maintenance concurrence is not required, as this work does not affect the maintenance of the structure.

Any time adjustments relating to this work will be deferred as it may impact the controlling operation.

00455G OCT 23 08

RECEIVED

CONCURRED BY:		
Construction Engineer:	Mahantesh Anigol RA	Date 10/4/06
Bridge Engineer:	Dan Adams, Office Structure Desig	Date9/15/2006
FHWA Representative:		Date
Project Engineer:	Trinh Lai, Project Engineer	Date9/15/2006
Other (specify):		Date
		Date
		Date
District Prior Approval By:		Date
HQ (Issue Approve) By:		Date
Resident Engineer's Signature: M. U. Anigol		Date 10/04/06

ESTIMATE OF COST

	THIS REQUEST	TOTAL TO DATE
ITEMS	$0.00	$0.00
FORCE ACCOUNT	$300,000.00	$625,000.00
AGREED PRICE	$0.00	$0.00
ADJUSTMENT	$0.00	$0.00
TOTAL	$300,000.00	$625,000.00

FEDERAL PARTICIPATION

☑ PARTICIPATING ☐ PARTICIPATING IN PART ☐ NONE
☐ NON-PARTICIPATING (MAINTENANCE) ☐ NON-PARTICIPATING

FEDERAL SEGREGATION (if more than one Funding Source or P.I.P. type)
☑ CCO FUNDED PER CONTRACT ☐ CCO FUNDED AS FOLLOWS

FEDERAL FUNDING SOURCE	PERCENT

CONTRACT CHANGE ORDER

Change Requested by: Engineer

CCO 50	Suppl. No. 2	Contract No. 04 - 0120R4	Road SF-80-12.6/13.2	FED. AID LOC.: ACBRIM-080-1(097)N

To: **CC MYERS INC**

You are directed to make the following changes from the plans and specifications or do the following described work not included in the plans and specifications for this contract. ***NOTE: This change order is not effective until approved by the Engineer.***

Description of work to be done, estimate of quantities and prices to be paid. (Segregate between additional work at contract price, agreed price and force account.) Unless otherwise stated, rates for rental of equipment cover only such time as equipment is actually used and no allowance will be made for idle time. This last percentage shown is the net accumulated increase or decrease from the original quantity in the Engineer's Estimate.

Extra Work at Force Account:

Provide additional funds to revise the currently proposed Viaduct segment design to stand alone and be de-coupled from the East Tie-In structure. The boundary conditions at Bents 48 and 52 shall assume no participation between the Viaduct and the West and East Tie-Ins. Perform additional exploratory, design, and check analysis as directed by the State's Engineer to complete this task.

Provide for the following enhancements to the current design:

* Provide connectivity in the form of structural steel struts or concrete bent caps between the columns located at Bents 49, 50, 51, & 52. Incorporate findings as applicable from the Design Study report generated by previous CCO 30.

* Provide additional support between the trusses and the top of columns 49, 50, 51, & 52 to prevent the truss chords from dropping vertically if the bearing keeper system shears off and fails.

The analysis shall be based on the three dimensional (3-D) computer model generated for CCO 49. The Contractor shall develop a task list for each request and coordinate with the Engineer to determine the process by which the work is to be executed. Each request shall be pre-approved by the States's Engineer prior to beginning work.

The foundation and substructure designs shall be re-analyzed based upon the directed changes.

The Contractor shall submit detailed biweekly invoices for payment of services.

Consideration of a time adjustment will be deferred until completion of work specified herein. Determination of a commensurate time extension will be made in accordance with Section 8-1.07 Liquidated Damages of the Standard Specifications.

Estimated cost of Extra Work at Force Account $100,000.00

CONTRACT CHANGE ORDER

Change Requested by: Engineer

CCO 50	Suppl. No. 2	Contract No. 04 - 0120R4	Road SF-80-12.6/13.2	FED. AID LOC.: ACBRIM-080-1(097)N

Estimated Cost: Increase ☑ Decrease ☐ $100,000.00

By reason of this order the time of completion will be adjusted as follows: Deferred

Submitted by

Signature M.U. Anigol	Resident Engineer: MAHANTESH ANIGOL	Date 12/7/06

Approval Recommended by

Signature	Construction Engineer: JASON TOM	Date 12/7/06

Engineer Approval by

Signature	(Print name and title) JASON TOM - Chief	Date 12/7/06

We the undersigned contractor, have given careful consideration to the change proposed and agree, if this proposal is approved, that we will provide all equipment, furnish the materials, except as may otherwise be noted above, and perform all services necessary for the work above specified, and will accept as full payment therefor the prices shown above.

NOTE: If you, the contractor, do not sign acceptance of this order, your attention is directed to the requirements of the specifications as to proceeding with the ordered work and filing a written protest within the time therein specified.

Contractor Acceptance by

Signature NOT APPLICABLE	(Print name and title)	Date

STATE OF CALIFORNIA - DEPARTMENT OF TRANSPORTATION

CONTRACT CHANGE ORDER MEMORANDUM

DATE: 12/6/2006 RECEIVED

TO: PETER SIEGENTHALER / JASON TOM	FILE: E.A. 04 - 0120R4
FROM: MAHANTESH ANIGOL	CO-RTE-PM SF-80-12.6/13.2 004851 JAN -36
	FED. NO. ACBRIM-080-1(097)N
CCO#: 50 SUPPLEMENT#: 2 Category Code: AWZZ	CONTINGENCY BALANCE (incl. this change) $1,018,029.81
COST: $100,000.00 INCREASE ☑ DECREASE ☐	HEADQUARTERS APPROVAL REQUIRED? ☑ YES ☐ NO
SUPPLEMENTAL FUNDS PROVIDED: $0.00	IS THIS REQUEST IN ACCORDANCE WITH ENVIRONMENTAL DOCUMENTS? ☑ YES ☐ NO
CCO DESCRIPTION: Viaduct Design Enhancements	**PROJECT DESCRIPTION:** CONSTRUCT ROUTE 80 TEMP BYPASS STRUCTURE

Original Contract Time:	Time Adj. This Change:	Previously Approved CCO Time Adjustments:	Percentage Time Adjusted: (including this change)	Total # of Unreconciled Deferred Time CCO(s): (including this change)
475 Day(s)	DEF Day(s)	381 Day(s)	80 %	7

THIS CHANGE ORDER PROVIDES FOR:

Providing additional funds for revising the current Viaduct Design to stand alone and be de-coupled from the East Tie-In structure and to provide for specific enhancements to the current design as detailed in the original CCO 50.

This Contract requires that a temporary bypass structure (TBS) be designed and constructed by the Contractor to detour traffic on westbound and eastbound Highway 80 between the eastern portal of the tunnel on Yerba Buena Island to Pier E-1 on the San Francisco-Oakland Bay Bridge (SFOBB). The completed structure will allow a future permanent transition structure to be built tying in the New East Span to the existing. It is being completed as one segment of the New East Span corridor.

At the time of bid opening, the TBS was to have been completed within a short time period and be in service for two to three years. Due to changes in other East Span projects, the corridor schedule has been extended, and traffic will be on the detour longer than originally intended. To alleviate the burden upon the traveling public with reduced traffic lanes, construction work on the Tie-In segments will continue to be suspended until the corridor schedule is finalized.

All work is continuing to proceed with the design of the TBS segments and construction has proceeded with the Viaduct foundations and columns.

The requested enhancements are necessary as the Viaduct segment will be constructed ahead of the remaining segments and will need to stand alone for a period of one to two years. The current Viaduct design relies upon the East Tie-In for stability. Additional redundancy will also be included by means of this change to provide for extended service life and to improve seismic and wind response.

Under the original CCO 50, the design work was to proceed incrementally with the State providing direction at each step. The State had underestimated the amount of time to complete this design. Therefore, this work will be done under extra work at force account for an estimated cost of $ 100,000.00, which can be financed from the project's contingency funds. The original CCO 50 was financed with the project's supplemental works funds, which have all been used.

The Contractor's signature is not required for additional funds for Extra Work at Force Account change orders. Therefore this change order is being issued unilaterally.

Dan Adams - Design Engineer, Trinh Lai - Project Engineer, Ken Terpstra - Project Manager, and Robert Kobal - Headquarters' Assistant Construction Coordinator concur with this change. HQ CCO Desk provided I & A approval of this change on 12/08/06.

Maintenance concurrence is not required, as this work does not affect the maintenance of the structure.

Any time adjustments relating to this work will be deferred as it may impact the controlling operation.

49.5082.01

ADA Notice: For individuals with sensory disabilities, this document is available in alternate formats. For information call: (916) 654-6410 or TDD (916) 654-3880 or write Records and Forms Management, 1120 N Street, MS-89, Sacramento, CA 95814.

CONCURRED BY:			
Construction Engineer:	Mahantesh Anigol, RE	Date	12/14/06
Bridge Engineer:	Dan Adams, OSD	Date	12/4/06
Project Engineer:	Trinh Lai, Project Engineer	Date	12/4/06
Project Manager:	Ken Terpstra, PM	Date	12/7/06
FHWA Rep.:		Date	
Environmental:		Date	
Other (specify):	Robert Kobal, HQ Asst. Contructio	Date	12/7/06
Other (specify):		Date	
District Prior Approval By:		Date	
HQ (Issue Approve) By:	Ken Darby, HQ CCO Desk	Date	12/8/06
Resident Engineer's Signature:		Date	

M. U. Anigol 12/14/06

ESTIMATE OF COST

	THIS REQUEST	TOTAL TO DATE
ITEMS	$0.00	$0.00
FORCE ACCOUNT	$100,000.00	$725,000.00
AGREED PRICE	$0.00	$0.00
ADJUSTMENT	$0.00	$0.00
TOTAL	$100,000.00	$725,000.00

FEDERAL PARTICIPATION

☐ PARTICIPATING ☐ PARTICIPATING IN PART ☐ NONE
☐ NON-PARTICIPATING (MAINTENANCE) ☐ NON-PARTICIPATING

FEDERAL SEGREGATION (if more than one Funding Source or P.I.P. type)
☑ CCO FUNDED PER CONTRACT ☐ CCO FUNDED AS FOLLOWS

FEDERAL FUNDING SOURCE	PERCENT

ADA Notice: For individuals with sensory disabilities, this document is available in alternate formats. For information call: (916) 654-6410 or TDD (916) 654-3880 or write Records and Forms Management, 1120 N Street, MS-89, Sacramento, CA 95814.

CONTRACT CHANGE ORDER

Change Requested by: Engineer

CCO 50	Suppl. No. 3	Contract No. 04 - 0120R4	Road SF-80-12.6/13.2	FED. AID LOC.: ACBRIM-080-1(097)N

To: **CC MYERS INC**

You are directed to make the following changes from the plans and specifications or do the following described work not included in the plans and specifications for this contract. ***NOTE: This change order is not effective until approved by the Engineer.***

Description of work to be done, estimate of quantities and prices to be paid. (Segregate between additional work at contract price, agreed price and force account.) Unless otherwise stated, rates for rental of equipment cover only such time as equipment is actually used and no allowance will be made for idle time. This last percentage shown is the net accumulated increase or decrease from the original quantity in the Engineer's Estimate.

Extra Work at Force Account:

Provide additional funds to revise the currently proposed Viaduct segment design to stand alone and be de-coupled from the East Tie-In structure. The boundary conditions at Bents 48 and 52 shall assume no participation between the Viaduct and the West and East Tie-Ins. Perform additional exploratory, design, and check analysis as directed by the State's Engineer to complete this task.

Provide for the following enhancements to the current design:

* Provide connectivity in the form of structural steel struts or concrete bent caps between the columns located at Bents 49, 50, 51, & 52. Incorporate findings as applicable from the Design Study report generated by previous CCO 30.

* Provide additional support between the trusses and the top of columns 49, 50, 51, & 52 to prevent the truss chords from dropping vertically if the bearing keeper system shears off and fails.

The analysis shall be based on the three dimensional (3-D) computer model generated for CCO 49. The Contractor shall develop a task list for each request and coordinate with the Engineer to determine the process by which the work is to be executed. Each request shall be pre-approved by the States's Engineer prior to beginning work.

The foundation and substructure designs shall be re-analyzed based upon the directed changes.

The Contractor shall submit detailed biweekly invoices for payment of services.

Consideration of a time adjustment will be deferred until completion of work specified herein. Determination of a commensurate time extension will be made in accordance with Section 8-1.07 Liquidated Damages of the Standard Specifications.

Estimated cost of Extra Work at Force Account $175,000.00

CONTRACT CHANGE ORDER

Change Requested by: Engineer

CCO 50	Suppl. No. 3	Contract No. 04 - 0120R4	Road SF-80-12.6/13.2	FED. AID LOC.: ACBRIM-080-1(097)N

Estimated Cost: Increase ☑ Decrease ☐ **$175,000.00**

By reason of this order the time of completion will be adjusted as follows: Deferred

Submitted by

Signature	Resident Engineer:	Date
M. U. Anigol	MAHANTESH ANIGOL	02/8/07

Approval Recommended by

Signature	Construction Engineer:	Date
	JASON TOM	2/8/07

Engineer Approval by

Signature	(Print name and title)	Date
	JASON TOM - Chief	2/9/07

We the undersigned contractor, have given careful consideration to the change proposed and agree, if this proposal is approved, that we will provide all equipment, furnish the materials, except as may otherwise be noted above, and perform all services necessary for the work above specified, and will accept as full payment therefor the prices shown above.

NOTE: If you, the contractor, do not sign acceptance of this order, your attention is directed to the requirements of the specifications as to proceeding with the ordered work and filing a written protest within the time therein specified.

Contractor Acceptance by

Signature	(Print name and title)	Date
not applicable		

STATE OF CALIFORNIA - DEPARTMENT OF TRANSPORTATION

CONTRACT CHANGE ORDER MEMORANDUM

DATE: 2/8/2007 Page 1 of 2

TO: JASON TOM / JASON TOM	FILE: **E.A.** 04 - 0120R4
FROM: MAHANTESH ANIGOL	**CO-RTE-PM** SF-80-12.6/13.2
	FED. NO. ACBRIM-080-1(097)N
CCO#: **50** SUPPLEMENT#: **3** Category Code: **AWZZ**	CONTINGENCY BALANCE (incl. this change) **$28,649,810.51**
COST: **$175,000.00** INCREASE ☑ DECREASE ☐	HEADQUARTERS APPROVAL REQUIRED? ☑ YES ☐ NO
SUPPLEMENTAL FUNDS PROVIDED: **$0.00**	IS THIS REQUEST IN ACCORDANCE WITH ENVIRONMENTAL DOCUMENTS? ☑ YES ☐ NO
CCO DESCRIPTION: Viaduct Design Enhancements	**PROJECT DESCRIPTION:** CONSTRUCT ROUTE 80 TEMP BYPASS STRUCTURE

Original Contract Time:	Time Adj. This Change:	Previously Approved CCO Time Adjustments:	Percentage Time Adjusted: (including this change)	Total # of Unreconciled Deferred Time CCO(s): (including this change)
475 Day(s)	**DEF** Day(s)	**381** Day(s)	**80** %	**7**

THIS CHANGE ORDER PROVIDES FOR:

Providing additional funds for revising the current Viaduct Design to stand alone and be de-coupled from the East Tie-In structure and to provide for specific enhancements to the current design as detailed in the original CCO 50.

This Contract requires that a temporary bypass structure (TBS) be designed and constructed by the Contractor to detour traffic on westbound and eastbound Highway 80 between the eastern portal of the tunnel on Yerba Buena Island to Pier E-1 on the San Francisco-Oakland Bay Bridge (SFOBB). The completed structure will allow a future permanent transition structure to be built tying in the New East Span to the existing. It is being completed as one segment of the New East Span corridor.

At the time of bid opening, the TBS was to have been completed within a short time period and be in service for two to three years. Due to changes in other East Span projects, the corridor schedule has been extended, and traffic will be on the detour longer than originally intended. To alleviate the burden upon the traveling public with reduced traffic lanes, construction work on the Tie-In segments will continue to be suspended until the corridor schedule is finalized.

All work is continuing to proceed with the design of the TBS segments and construction has proceeded with the Viaduct foundations and columns.

The requested enhancements are necessary as the Viaduct segment will be constructed ahead of the remaining segments and will need to stand alone for a period of one to two years. The current Viaduct design relies upon the East Tie-In for stability. Additional redundancy will also be included by means of this change to provide for extended service life and to improve seismic and wind response.

Under the original CCO 50, the design work was to proceed incrementally with the State providing direction at each step. The State had underestimated the amount of time to complete this design. Therefore, this work will be done under extra work at force account for an estimated cost of $ 175,000.00, which can be financed from the project's contingency funds, bringing the total amount allocated for this change order to $900,000.00. The original CCO 50 was financed with the project's supplemental works funds, which have all been used.

The Contractor's signature is not required for additional funds for Extra Work at Force Account change orders. Therefore this change order is being issued unilaterally.

Dan Adams - Design Engineer, Ken Terpstra - Project Manager, and Robert Kobal - Headquarters' Assistant Construction Coordinator concur with this change. HQ CCO Desk provided I & A approval of this change on 02/09/2007.

Maintenance concurrence is not required, as this work does not affect the maintenance of the structure.

Any time adjustments relating to this work will be deferred as it may impact the controlling operation.

RECEIVED
07 MAR -8 PM 5:10

ADA Notice: For individuals with sensory disabilities, this document is available in alternate formats. For information call: (916) 654-6410 or TDD (916) 654-3880 or write Records and Forms Management, 1120 N Street, MS-89, Sacramento, CA 95814.

CONTRACT CHANGE ORDER MEMORANDUM

CONCURRED BY:		
Construction Engineer:	Mahantesh Anigol MA	Date 2/8/07
Bridge Engineer:	Dan Adams, OSD	Date 2/8/07
Project Engineer:		Date
Project Manager:	Ken Terpstra	Date 2/8/07
FHWA Rep.:		Date
Environmental:		Date
Other (specify):		Date
Other (specify):		Date
District Prior Approval By:		Date
HQ (Issue Approve) By:	Ken Darby, HQ CCO Desk	Date
Resident Engineer's Signature:	M U. Anigol	Date 02/8/07

ESTIMATE OF COST

	THIS REQUEST	TOTAL TO DATE
ITEMS	$0.00	$0.00
FORCE ACCOUNT	$175,000.00	$900,000.00
AGREED PRICE	$0.00	$0.00
ADJUSTMENT	$0.00	$0.00
TOTAL	$175,000.00	$900,000.00

FEDERAL PARTICIPATION

☐ PARTICIPATING ☐ PARTICIPATING IN PART ☑ NONE
☐ NON-PARTICIPATING (MAINTENANCE) ☐ NON-PARTICIPATING

FEDERAL SEGREGATION (if more than one Funding Source or P.I.P. type)
☑ CCO FUNDED PER CONTRACT ☐ CCO FUNDED AS FOLLOWS

FEDERAL FUNDING SOURCE	PERCENT

ADA Notice: For individuals with sensory disabilities, this document is available in alternate formats. For information call: (916) 654-6410 or TDD (916) 654-3880 or write Records and Forms Management, 1120 N Street, MS-89, Sacramento, CA 95814.

STATE OF CALIFORNIA - DEPARTMENT OF TRANSPORTATION

CONTRACT CHANGE ORDER

Change Requested by: Engineer

CCO 50	Suppl. No. 4	Contract No. 04 - 0120R4	Road SF-80-12.6/13.2	FED. AID LOC.:

To: **CC MYERS INC**

You are directed to make the following changes from the plans and specifications or do the following described work not included in the plans and specifications for this contract. ***NOTE: This change order is not effective until approved by the Engineer.***

Description of work to be done, estimate of quantities and prices to be paid. (Segregate between additional work at contract price, agreed price and force account.) Unless otherwise stated, rates for rental of equipment cover only such time as equipment is actually used and no allowance will be made for idle time. This last percentage shown is the net accumulated increase or decrease from the original quantity in the Engineer's Estimate.

Extra Work at Force Account:

Provide additional funds.

Estimated cost of Extra Work at Force Account $30,000.00

RECEIVED
01 543 FEB 3 10

Estimated Cost: Increase ☑ Decrease ☐ **$30,000.00**

By reason of this order the time of completion will be adjusted as follows: 0 days

Submitted by

Signature	Resident Engineer	Date
	BILL CASEY	12-11-09

Approval Recommended by

Signature	Area Construction Manager	Date
Deanna Vilcheck	DEANNA VILCHECK	12/14/09

Engineer Approval by

Signature	Area Construction Manager	Date
Michael C Hamm	DEANNA VILCHECK	12/22/2009

We the undersigned contractor, have given careful consideration to the change proposed and agree, if this proposal is approved, that we will provide all equipment, furnish the materials, except as may otherwise be noted above, and perform all services necessary for the work above specified, and will accept as full payment therefor the prices shown above.

NOTE: If you, the contractor, do not sign acceptance of this order, your attention is directed to the requirements of the specifications as to proceeding with the ordered work and filing a written protest within the time therein specified.

Contractor Acceptance by

Signature	(Print name and title)	Date
N/A	N/A	N/A

STATE OF CALIFORNIA - DEPARTMENT OF TRANSPORTATION

CONTRACT CHANGE ORDER MEMORANDUM

DATE: 12/1/2009

TO: MIKE FORNER / DEANNA VILCHECK	FILE: **E.A.** 04 - 0120R4
	CO-RTE-PM SF-80-12.6/13.2
FROM: BILL CASEY	**FED. NO.**
CCO#: **50** SUPPLEMENT#: **4** Category Code: **AWZZ**	CONTINGENCY BALANCE (incl. this change) **$44,201,726.59**
COST: **$30,000.00** INCREASE ☑ DECREASE ☐	HEADQUARTERS APPROVAL REQUIRED? ☑ YES ☐ NO
SUPPLEMENTAL FUNDS PROVIDED: **$0.00**	IS THIS REQUEST IN ACCORDANCE WITH ENVIRONMENTAL DOCUMENTS? ☑ YES ☐ NO
CCO DESCRIPTION: Add Funds for Stand Alone VIA Design	**PROJECT DESCRIPTION:** CONSTRUCT ROUTE 80 TEMP BYPASS STRUCTURE

Original Contract Time:	Time Adj. This Change:	Previously Approved CCO Time Adjustments:	Percentage Time Adjusted: (including this change)	Total # of Unreconciled Deferred Time CCO(s): (including this change)
475 Day(s)	**0** Day(s)	**1600** Day(s)	**337** %	**0**

THIS CHANGE ORDER PROVIDES FOR:

Providing additional funds for revising the current Viaduct Design to stand alone and be de-coupled from the East Tie-In structure and to provide for specific enhancements to the current design as detailed in the original CCO 50.

This project, the Yerba Buena Island Detour (YBID), was awarded in March 2004 to construct a detour that will allow for the tie in of the new east span of the San Francisco Oakland Bay Bridge to Yerba Buena Island. The YBID encompasses three main structures, the East Tie-In to the existing bridge, the West Tie-In (WTI) to Yerba Buena Island, and the Viaduct structure between the two tie ins.

Two separate Department strategy memorandums, dated December 14, 2006 and December 25, 2006, approved by Tony Anziano - Toll Bridge Program Manager and Richard Land - Chief Engineer, recommended that the Department assume responsibility for the designs of the East Tie-In (ETI) and West Tie-In (WTI) portions of this contract, and incorporated seismic retrofit work of the permanent Yerba Buena Island Transition Structure (YBITS) onto this project. The approval of these strategy memorandums extended the project completion date approximately 5 years.

Under the original CCO 50, the design work was to proceed incrementally with the State providing direction at each step. The State had underestimated the amount of time to complete this design. Therefore, this work will be done under extra work at force account for an estimated cost of $30,000.00, which can be financed from the project's contingency funds, bringing the total amount allocated to this change order to $930,000.00. The original CCO 50 was financed with the project's supplemental works funds, which have all been expended.

The Contractor's signature is not required for additional funds for Extra Work at Force Account change orders. Therefore this change order is being issued unilaterally.

No adjustment of contract time is warranted by this change, as it does not affect the controlling operation.

This change was concurred with by Alec Melkonians - Asst. Project Manager and Minh B. Nguyen - Project Engineer.

Maintenance concurrence is not required, as this work does not affect the maintenance of the structure.

ADA Notice: For individuals with sensory disabilities, this document is available in alternate formats. For information...

CONCURRED BY:		
Construction Engineer:	Bill Casey, Resident Engineer	Date 12-11-09
Bridge Engineer:		Date
Project Engineer:	Minh B. Nguyen, PE	Date 12/2/09
Project Manager:	Alec Melkonians	Date 12/1/09
FHWA Rep.:		Date
Environmental:		Date
Other (specify):		Date
Other (specify):		Date
District Prior Approval By:		Date
HQ (Issue Approve) By:	Bob Molera, HQ CCO Engineer	Date 12-21-09
Resident Engineer's Signature:		Date

12-11-09

ESTIMATE OF COST

	THIS REQUEST	TOTAL TO DATE
ITEMS	$0.00	$0.00
FORCE ACCOUNT	$30,000.00	$930,000.00
AGREED PRICE	$0.00	$0.00
ADJUSTMENT	$0.00	$0.00
TOTAL	$30,000.00	$930,000.00

FEDERAL PARTICIPATION

☐ PARTICIPATING ☐ PARTICIPATING IN PART ☑ NONE
☐ NON-PARTICIPATING (MAINTENANCE) ☐ NON-PARTICIPATING

FEDERAL SEGREGATION (if more than one Funding Source or P.I.P. type)
☐ CCO FUNDED PER CONTRACT ☐ CCO FUNDED AS FOLLOWS

FEDERAL FUNDING SOURCE	PERCENT

ADA Notice: For individuals with sensory disabilities, this document is available in alternate formats. For information call: (916) 654-6410 or TDD (916) 654-3880 or write

STATE OF CALIFORNIA - DEPARTMENT OF TRANSPORTATION

CONTRACT CHANGE ORDER

Change Requested by: Engineer

CCO: 50	Suppl. No. 5	Contract No. 04 - 0120R4	Road SF-80-12.6/13.2	FED. AID LOC.:

To: **CC MYERS INC**

You are directed to make the following changes from the plans and specifications or do the following described work not included in the plans and specifications for this contract. ***NOTE: This change order is not effective until approved by the Engineer.***

Description of work to be done, estimate of quantities and prices to be paid. (Segregate between additional work at contract price, agreed price and force account.) Unless otherwise stated, rates for rental of equipment cover only such time as equipment is actually used and no allowance will be made for idle time. This last percentage shown is the net accumulated increase or decrease from the original quantity in the Engineer's Estimate.

Extra Work at Force Account:

Provide additional funds for the work specified under the original Change Order No. 50.

Estimated cost of Extra Work at Force Account $30,000.00

Estimated Cost: Increase ☑ Decrease ☐ **$30,000.00**

By reason of this order the time of completion will be adjusted as follows: 0 days

Submitted by		
Signature Jeannie Balderramos	Resident Engineer JEANNIE BALDERRAMOS	Date 4/28/10
Recommended by		
Signature Deanna Vilcheck	Area Construction Manager DEANNA VILCHECK	Date 4/29/10
Engineer Approved by		
Signature Deanna Vilcheck	Area Construction Manager DEANNA VILCHECK	Date 5/7/10

We the undersigned contractor, have given careful consideration to the change proposed and agree, if this proposal is approved, that we will provide all equipment, furnish the materials, except as may otherwise be noted above, and perform all services necessary for the work above specified, and will accept as full payment therefor the prices shown above.

NOTE: If you, the contractor, do not sign acceptance of this order, your attention is directed to the requirements of the specifications as to proceeding with the ordered work and filing a written protest within the time therein specified.

Contractor Acceptance by		
Signature NOT REQUIRED	(Print name and title)	Date

CONTRACT CHANGE ORDER

Change Requested by: Engineer

CCO: 51	Suppl. No. 0	Contract No. 04 - 0120R4	Road SF-80-12.6/13.2	FED. AID LOC.: ACBRIM-080-1(097)N

To: **CC MYERS INC**

You are directed to make the following changes from the plans and specifications or do the following described work not included in the plans and specifications for this contract. ***NOTE: This change order is not effective until approved by the Engineer.***

Description of work to be done, estimate of quantities and prices to be paid. (Segregate between additional work at contract price, agreed price and force account.) Unless otherwise stated, rates for rental of equipment cover only such time as equipment is actually used and no allowance will be made for idle time. This last percentage shown is the net accumulated increase or decrease from the original quantity in the Engineer's Estimate.

Adjustment of Compensation at Lump Sum:

Full settlement of Notice of Potential Claim # 12 for the removal of utility lines at Bent 48, as outlined in the Contractor's proposal dated 4/3/06 and referenced in the following correspondences:

215-RFI-00.00017-00, 215-RFI-001.00018-0, 215-STL.00021, 215-STL.00148, 215-STL.00159, 215-STL.00160, 215-STT.00297, 215-STT.00312, 05.03.02-000210, 05.03.01-000172, 05.03.01-000193, 05.03.01-000468, 05.03.01-000494, 05.03.01-00525

For this work, the Contractor will be paid the agreed lump sum price of $25,234.12. This lump sum constitutes full compensation, including all markups, for the work of this change. Acceptance of this agreed lump sum shall constitute full settlement for NOPC # 12.

Additionally, by signing this Contract Change Order, the Contractor also agrees to drop NOPC # 13 for flagging issues on Macalla Road, as outlined in the Contractor's proposal dated 4/3/06 and referenced in the following correspondences:

215-2TT.00382, 215-STL.00183, 215-215.00400, 05.03.01-000452, 05.03.01-000565, 05.03.01-000591

Total Cost of Adjustment of Compensation at Agreed Lump Sum $25,234.12

Estimated Cost: **Increase** ☑ **Decrease** ☐ **$25,234.12**

By reason of this order the time of completion will be adjusted as follows: 0 days

Submitted by

Signature	Resident Engineer: MAHANTESH ANIGOL	Date 06/01/06

Approval Recommended by

Signature	Construction Engineer: MAHANTESH ANIGOL	Date 06/01/06

Engineer Approval by

Signature	(Print name and title) RICK MORROW - Chief	Date 8/3/06

We the undersigned contractor, have given careful consideration to the change proposed and agree, if this proposal is approved, that we will provide all equipment, furnish the materials, except as may otherwise be noted above, and perform all services necessary for the work above specified, and will accept as full payment therefor the prices shown above.

NOTE: If you, the contractor, do not sign acceptance of this order, your attention is directed to the requirements of the specifications as to proceeding with the ordered work and filing a written protest within the time therein specified.

Contractor Acceptance by

Signature	(Print name and title) DEWEY C. LEE JR. Contract Manager	Date 6/19/06

STATE OF CALIFORNIA - DEPARTMENT OF TRANSPORTATION

CONTRACT CHANGE ORDER MEMORANDUM

TO: JASON TOM / MAHANTESH ANIGOL	FILE: **E.A.** 04 - 0120R4
FROM: MAHANTESH ANIGOL	**CO-RTE-PM** SF-80-12.6/13.2
	FED. NO. ACBRIM-080-1(097)N
CCO#: **51** SUPPLEMENT#: **0** Category Code: **EHBB**	CONTINGENCY BALANCE (incl. this change) **$2,841,521.27**
COST: **$25,234.12** INCREASE ☑ DECREASE ☐	HEADQUARTERS APPROVAL REQUIRED? ☐ YES ☑ NO
SUPPLEMENTAL FUNDS PROVIDED: **$0.00**	IS THIS REQUEST IN ACCORDANCE WITH ENVIRONMENTAL DOCUMENTS? ☑ YES ☐ NO
CCO DESCRIPTION: NOPC 12 & 13 Resolution	**PROJECT DESCRIPTION:** CONSTRUCT ROUTE 80 TEMP BYPASS STRUCTURE

LOCATION: IN THE CITY AND COUNTY OF SAN FRANCISCO FROM YERBA BUENA TUNNEL TO 0.6 KM EAST OF THE YERBA BUENA TUNNEL

THIS CHANGE ORDER PROVIDES FOR:

This contract change order compensates the Contractor for additional costs associated with Notice of Potential Claim #12 for issues as outlined in the Contractor's proposal dated 4/3/06 and referenced in the following correspondence:

215-RFI-00.00017-00, 215-RFI-001.00018-0, 215-STL.00021, 215-STL.00148, 215-STL.00159, 215-STL.00160, 215-STT.00297, 215-STT.00312, 05.03.02-000210, 05.03.01-000172, 05.03.01-000193, 05.03.01-000468, 05.03.01-000494, 05.03.01-00525

The Department and the Contractor have agreed to share entitlement for costs to remove and dispose of the utility conduits and vault at Bent 48, as outlined in Notice of Potential Claim #12. The utility lines were shown on the contract plans, however, the utility vault was not shown. The Department will pay the cost for removing and disposing of the utility vault, including any vibration monitoring and restaking costs. The Contractor will pay the cost for the remobilization of the piledriving equipment.

Based on the cost break down submitted by the Contractor, the State agreed to settle this claim for a lump sum amount of $25,234.12, which can be financed from contingency funds available for this project.

Additionally, the Contractor also agrees to drop and no longer pursue NOPC # 13 for flagging issues on Macalla Road, as outlined in the Contractor's proposal dated 4/3/06 and referenced in the following correspondence:

215-2TT.00382, 215-STL.00183, 215-215.00400, 05.03.01-000452, 05.03.01-000565, 05.03.01-000591

Maintenance concurrence is not necessary with this change order as this does not change the final product.

No adjustment of contract time is warranted, as this change does not affect the controlling operation(s) of work.

It is recommended by the Resident Engineer that this Contract Change Order be approved.

CONCURRED BY:		
Construction Engineer: Mahantesh Anigol	Date	8/3/06
Bridge Engineer:	Date	
FHWA Representative:	Date	
Project Engineer:	Date	
Other (specify):	Date	
	Date	
	Date	
District Prior Approval By: Rick Morrow, Constr. Mangr	Date	8/3/2006
HQ (Issue Approve) By:	Date	
Resident Engineer's Signature: M. L. Anigol	Date	8/3/06

ESTIMATE OF COST

	THIS REQUEST	TOTAL TO DATE
ITEMS	$0.00	$0.00
FORCE ACCOUNT	$0.00	$0.00
AGREED PRICE	$0.00	$0.00
ADJUSTMENT	$25,234.12	$25,234.12
TOTAL	$25,234.12	$25,234.12

FEDERAL PARTICIPATION

☑ PARTICIPATING ☐ PARTICIPATING IN PART ☐ NONE
☐ NON-PARTICIPATING (MAINTENANCE) ☐ NON-PARTICIPATING

FEDERAL SEGREGATION (if more than one Funding Source or P.I.P. type)
☑ CCO FUNDED PER CONTRACT ☐ CCO FUNDED AS FOLLOWS

FEDERAL FUNDING SOURCE	PERCENT

CONTRACT CHANGE ORDER

Change Requested by: Engineer

CCO 52	Suppl. No. 0	Contract No. 04 - 0120R4	Road SF-80-12.6/13.2	FED. AID LOC.: ACBRIM-080-1(097)N

To: **CC MYERS INC**

You are directed to make the following changes from the plans and specifications or do the following described work not included in the plans and specifications for this contract. ***NOTE: This change order is not effective until approved by the Engineer.***

Description of work to be done, estimate of quantities and prices to be paid. (Segregate between additional work at contract price, agreed price and force account.) Unless otherwise stated, rates for rental of equipment cover only such time as equipment is actually used and no allowance will be made for idle time. This last percentage shown is the net accumulated increase or decrease from the original quantity in the Engineer's Estimate.

Adjustment of Compensation at Lump Sum:

The Contractor is directed to cease design work on the East and West Tie-In segments of the Temporary Bypass Structure (TBS). Compensation for work completed to date shall be made by item payment.

The State will design, and provide plans and specifications for the Contractor to complete the construction of these segments.

The Contractor, Contractor's Engineer, Geotechnical Engineer, and Design Manager will maintain their responsibilities for the design construction, and certification of the construction for Viaduct segment of the Temporary Bypass Structure in accordance with the plans and specifications. The Viaduct shall be designed to stand alone in accordance with Contract Change Order No. 50.

All design references related to the Temporary Bypass Structure contained within the plans and specifications shall apply only to the Viaduct Segment.

The following separate change orders shall be issued to address the various issues related to this change:

1. Close out of Design Costs and any adjustments in item for work related to the East and West Tie-Ins
2. Construction costs for the State designed East and West Tie-Ins segments

Consideration of a time adjustment will be deferred until completion of the work specified herein. Determination of a commensurate time extension will be made in accordance with Section 8-1.07, "Liquidated Damages," of the Standard Specifications.

For this work the contractor will be paid the agreed lump sum of $0.00. This sum constitutes full compensation, including markups, for this change.

Total cost of Adjustment of Compensation at Lump Sum Price $0.00

RECEIVED
05/08 FEB 27

CONTRACT CHANGE ORDER

Change Requested by: Engineer

CCO 52	Suppl. No. 0	Contract No. 04 - 0120R4	Road SF-80-12.6/13.2	FED. AID LOC.: ACBRIM-080-1(097)N

RECEIVED
05 | 08 FEB 27 07

Estimated Cost: Increase ☐ Decrease ☐ **$0.00**

By reason of this order the time of completion will be adjusted as follows: Deferred

Submitted by

Signature	Resident Engineer: MAHANTESH ANIGOL	Date 02/13/07

Approval Recommended by

Signature	Construction Engineer: JASON TOM	Date 2/13/07

Engineer Approval by

Signature	(Print name and title) PETER SIEGENTHALER - Chief	Date 3/1/07

We the undersigned contractor, have given careful consideration to the change proposed and agree, if this proposal is approved, that we will provide all equipment, furnish the materials, except as may otherwise be noted above, and perform all services necessary for the work above specified, and will accept as full payment therefor the prices shown above.

NOTE: If you, the contractor, do not sign acceptance of this order, your attention is directed to the requirements of the specifications as to proceeding with the ordered work and filing a written protest within the time therein specified.

Contractor Acceptance by

Signature	(Print name and title) DEWEY C. LEE JR. Contract Manager	Date 2/23/07

STATE OF CALIFORNIA - DEPARTMENT OF TRANSPORTATION

CONTRACT CHANGE ORDER MEMORANDUM

DATE: 4/21/2006

TO: PETER SIEGENTHALER / JASON TOM	FILE: **E.A.** 04 - 0120R4
FROM: MAHANTESH ANIGOL	**CO-RTE-PM** SF-80-12.6/13.2
	FED. NO. ACBRIM-080-1(097)N
CCO#: **52** SUPPLEMENT#: **0** Category Code: **CHSA**	CONTINGENCY BALANCE (incl. this change) **$28,829,810.51**
COST: **$0.00** INCREASE ☐ DECREASE ☐	HEADQUARTERS APPROVAL REQUIRED? ☑ YES ☐ NO
SUPPLEMENTAL FUNDS PROVIDED: **$0.00**	IS THIS REQUEST IN ACCORDANCE WITH ENVIRONMENTAL DOCUMENTS? ☑ YES ☐ NO
CCO DESCRIPTION: Elimination of Contract Tie-Ins	**PROJECT DESCRIPTION:** CONSTRUCT ROUTE 80 TEMP BYPASS STRUCTURE

Original Contract Time:	Time Adj. This Change:	Previously Approved CCO Time Adjustments:	Percentage Time Adjusted: (including this change)	Total # of Unreconciled Deferred Time CCO(s): (including this change)
475 Day(s)	**DEF** Day(s)	**0** Day(s)	**0** %	**6**

THIS CHANGE ORDER PROVIDES FOR:

directing the Contractor to cease design work on the East Tie-In (ETI) and West Tie-In (WTI) segments of the Temporary Bypass Structure (TBS). The State will assume the design for the WTI and ETI, and provide plans and specifications to the Contractor for completion of these segments. The Contractor, Contractor's Engineer, and Design Manager shall maintain their roles and responsibilities under the current contract for the design, construction, and certification of the Viaduct segment of the TBS.

The TBS is being constructed to detour traffic from San Francisco Oakland Bay Bridge to allow the completion of the new east span. This Contract uses a performance based design and construct delivery method to expedite completion. The TBS is composed of the ETI, Viaduct, and WTI. At time of contract award the proposed SFOBB corridor was scheduled for completion in late 2006, requiring the TBS to be completed in 2005. Due to extensions in the corridor schedule the TBS detour will not be required to be in service until 2010. Furthermore, early opening of the TBS will impact the traveling public due to the lower posted speed limits, reduced lane width, and unconventional geometry. Therefore, it is desirable to delay the traveling public on the TBS for as long as possible.

West Tie-In

The existing structure within the limits of the WTI is comprised of a double deck concrete viaduct that was originally completed in 1936 and retrofitted in 1962. The State is in the process of designing the retrofit of the existing Yerba Buena Island Viaduct (YBIV) outside the current contract. By assuming design responsibility of the WTI under this change order, the permanent retrofit of YBIV can be combined with the WTI and therefore constructed prior to detouring traffic onto the TBS. Combining the design of the WTI with the necessary retrofit of the existing bridge will benefit the State by achieving seismic safety at an earlier date, reduce the overall time and traffic impacts to the public, and eliminate the need to reduce eastbound traffic lane widths to ten feet. Extensive structural reconfigurations will be avoided in the future with the integration of retrofit work.

East Tie-In

With the current contract, the State expected the contractor would utilize the Roll-Out/Roll-In (RORI) concept for the East Tie-In work. However, being a performance based contract, the bidding process allowed innovation and alternative designs. The Contractor's ETI design submitted to the State included several complexities that increased the risk of disruption to the traveling public during the construction phase, especially load transfer, increased the need for maintenance of the ETI during its service life and introduced unpredictable behavior of lateral loads. By assuming responsibility of the ETI and utilizing the RORI concept the State will advance a more predictable design, which allows accomplishing a load transfer in two stages during a single 24 hr bridge closure. Also, unlike the contractor's submitted design, the RORI design does not rely on material property and performance assumptions of the 70 year old structure, It is considered least disruptive to the traveling public.

The unknown risks associated with the contractors proposed design presents issues that the State found to be unacceptable. It is not certain that the Contractor's design would ever meet the State's requirements for limited risks and minimal impact to the traveling public. As a result, the State has decided that it will be best to assume this task it will be in a better position to manage its risks.

To implement this change, supplemental contract change orders will be necessary to address the following:

ADA Notice: For individuals with sensory disabilities, this document is available in alternate formats. For information call: (916) 654-6410 or TDD (916) 654-3880 or write Records and Forms Management, 1120 N Street, MS-89, Sacramento, CA 95814.

1. Construction of the State designed ETI and WTI structures.
2. Close out of Design costs and any adjustments in the contract items for work related to the East and West Tie-Ins.

Consideration of a time adjustment will be deferred pending completion of the work specified in this change order.

This change was discussed with and concurred by Tony Anziano - Toll Bridge Program Manager, Peter Siegenthaler - SFOBB Construction Manager, and Jon Tapping - Headquarters Construction Coordinator, Tom Ostrom - Office of Structure Design. TBPOC provided authorization to proceed with this change order per their meeting on May 31, 2006. FHWA authorzation is no longer required as federal authorization for this project has been officially withdrawn. This change is in accordance with the approved "SFOBB Corridor Schedule Mitigation - Strategy for South-South Detour Contract Completion".

Supporting documents and information are on file at the office of the Resident Engineer.

This Contract Change Order will be unilaterally approved as the Contractor has refused to sign on the basis that this change order does not contain specific language to address compensation for costs connected to the elimination of the design work. Attached is their letter 215-STT.00711

CONCURRED BY:		
Construction Engineer:	Mahantesh Anigol MA	Date 3/2/07
Bridge Engineer:	Tom Ostrom, OSD	Date 12/14/06
Project Engineer:		Date
Project Manager:	Ken Terpstra	Date 12/14/06
FHWA Rep.:		Date
Environmental:		Date
Other (specify):	TBPOC	Date 5/31/06
Other (specify):	Jon Tapping, HQ Constr. Coord.	Date 12/14/06
District Prior Approval By:	Tony Anziano, TB Prgm Manager	Date 12/14/06
HQ (Issue Approve) By:	Ken Darby, HQ CCO Desk	Date 1/9/07
Resident Engineer's Signature:	M. U. Anigol	Date 03/01/07

ESTIMATE OF COST		
	THIS REQUEST	TOTAL TO DATE
ITEMS	$0.00	$0.00
FORCE ACCOUNT	$0.00	$0.00
AGREED PRICE	$0.00	$0.00
ADJUSTMENT	$0.00	$0.00
TOTAL	$0.00	$0.00

FEDERAL PARTICIPATION

☐ PARTICIPATING ☐ PARTICIPATING IN PART ☑ NONE
☐ NON-PARTICIPATING (MAINTENANCE) ☐ NON-PARTICIPATING

FEDERAL SEGREGATION (if more than one Funding Source or P.I.P. type)
☑ CCO FUNDED PER CONTRACT ☐ CCO FUNDED AS FOLLOWS

FEDERAL FUNDING SOURCE	PERCENT

ADA Notice: For individuals with sensory disabilities, this document is available in alternate formats. For information call: (916) 654-6410 or TDD (916) 654-3880 or write Records and Forms Management, 1120 N Street, MS-89, Sacramento, CA 95814.

STATE OF CALIFORNIA - DEPARTMENT OF TRANSPORTATION

CONTRACT CHANGE ORDER

Change Requested by: Engineer

CCO: 53	Suppl. No. 0	Contract No. 04 - 0120R4	Road SF-80-12.6/13.2	FED. AID LOC.: ACBRIM-080-1(097)N

To: CC MYERS INC

You are directed to make the following changes from the plans and specifications or do the following described work not included in the plans and specifications for this contract. ***NOTE: This change order is not effective until approved by the Engineer.***

Description of work to be done, estimate of quantities and prices to be paid. (Segregate between additional work at contract price, agreed price and force account.) Unless otherwise stated, rates for rental of equipment cover only such time as equipment is actually used and no allowance will be made for idle time. This last percentage shown is the net accumulated increase or decrease from the original quantity in the Engineer's Estimate.

Extra Work at Force Account:

The Contractor is directed to cease further work on the partially completed eleven (11) cell modular joint seal proposed for use at the cantilevered joint on the Viaduct Segment of the Temporary Bypass Structure. The partially fabricated joint seal shall be kept at its currently stored location for salvage by State forces. The Contractor shall provide assistance as necessary to the State to facilitate the removal of the material.

Payment will be in accordance with Section 4-1.03D, Extra Work, of the Standard Specifications, and Section 5-1.24, Force Account Payment, of the Special Provisions, and no other compensation will be allowed therefor.

No adjustment in contract time will be made since this work is not a controlling operation.

A supplemental change order will be issued to take a credit for savings associated with elimination of work related to this change order.

Estimated cost of Extra Work at Force Account $240,000.00

0043

Estimated Cost: Increase ☑ Decrease ☐ $240,000.00

By reason of this order the time of completion will be adjusted as follows: 0 days

Submitted by		
Signature M. U. Anigol	Resident Engineer: MAHANTESH ANIGOL	Date 11/07/06
Approval Recommended by		
Signature M. U. Anigol	Construction Engineer: MAHANTESH ANIGOL	Date 11/7/06
Engineer Approval by		
Signature	(Print name and title) JASON TOM - Chief	Date 12/11/06

We the undersigned contractor, have given careful consideration to the change proposed and agree, if this proposal is approved, that we will provide all equipment, furnish the materials, except as may otherwise be noted above, and perform all services necessary for the work above specified, and will accept as full payment therefor the prices shown above.

NOTE: If you, the contractor, do not sign acceptance of this order, your attention is directed to the requirements of the specifications as to proceeding with the ordered work and filing a written protest within the time therein specified.

Contractor Acceptance by		
Signature Dewey C Lee, Jr	(Print name and title) DEWEY C. LEE JR. Contract Manager	Date 11/22/06

STATE OF CALIFORNIA - DEPARTMENT OF TRANSPORTATION

CONTRACT CHANGE ORDER MEMORANDUM

DATE: 7/10/2006

TO: PETER SIENGENTHALER / JASON TOM	FILE: **E.A.** 04 - 0120R4
FROM: MAHANTESH ANIGOL	**CO-RTE-PM** SF-80-12.6/13.2
	FED. NO. ACBRIM-080-1(097)N
CCO#: **53** SUPPLEMENT#: **0** Category Code: **AXZZ**	CONTINGENCY BALANCE (incl. this change) **$1,491,373.18**
COST: **$240,000.00** INCREASE ☑ DECREASE ☐	HEADQUARTERS APPROVAL REQUIRED? ☑ YES ☒ NO
SUPPLEMENTAL FUNDS PROVIDED: **$0.00**	IS THIS REQUEST IN ACCORDANCE WITH ENVIRONMENTAL DOCUMENTS? ☑ YES ☐ NO
CCO DESCRIPTION: Handling & Storage of Joint Seals	**PROJECT DESCRIPTION:** CONSTRUCT ROUTE 80 TEMP BYPASS STRUCTURE

Original Contract Time:	Time Adj. This Change:	Previously Approved CCO Time Adjustments:	Percentage Time Adjusted: (including this change)	Total # of Unreconciled Deferred Time CCO(s): (including this change)
475 Day(s)	**0** Day(s)	**381** Day(s)	**80** %	**6**

THIS CHANGE ORDER PROVIDES FOR:

Cease further work on the partially completed eleven (11) cell modular joint seal proposed for use at the cantilevered joint on the Viaduct Segment of the Temporary Bypass Structure.

This Contract constructs a temporary bypass structure (TBS) to reroute traffic on existing Highway 80 to allow for the completion of the new San Francisco Oakland Bay Bridge. It was awarded as a "performance based design criteria project," which requires the Contractor to complete both the design and construction of the TBS. This delivery method was chosen to allow early contract award and completion by maximizing Contractor flexibility and efficiency in construction. As a result, early fabrication of the bridge components with long lead times is necessary to meet the construction schedule. This includes but is not limited to modular joint seals.

On March 16, 2006, the State directed the Contractor (Ltr 690) to redesign the Viaduct segment of the TBS to "stand alone" as it would be constructed prior to the adjacent East Tie-In segment. After analyzing the preliminary results of these efforts, it was determined that the joint seals as designed would be in conflict. On May 08, 2006, the Contractor was directed to cease further production on the joint seal and to store the material until such time that the revised joint seal requirements could be determined. After receiving the storage costs, it was determined that shipping the joint seals out to the job site for storage would be more economical as storage costs at the fabricator's shop was excessively high and it was unknown at the time when the East Tie-In design issues driving the joint configuration would be resolved.

On June 14, 2006, the State provided notice to the Contractor (Ltr 713) that the design of the East Tie-In and West Tie-In segments of the TBS would be completed by the State. At this point in time, it was still uncertain whether the partially fabricated joint seals could be reutilized.

On July 31, 2006, the State notified the Contractor (Ltr 730) that the joint seals will not be reused and requested that a final cost be provided. This letter was issued with concurrence from Tom Ostrom, Structures Design. The partially fabricated joint seal material will be salvaged by the Foundations Testing and Instrumentation branch. As the joint seal is currently on site, the cost of transporting the material for salvage exceeds any return value.

The cost for this joint seal was included as part of the lump sum contract item for constructing the Viaduct segment of the TBS. A supplemental change order will be issued to take a credit on this item once the future joint seal requirements are determined.

This change was concurred by Tom Ostrom - Office of Structure Design North, Ken Terpstra - SFOBB Project Manager, Robert Kobal - HQ Asst. Construction Coordinator, and Ken Darby - HQ CCO Desk.

No adjustment of the contract time is warranted, as this change does not affect the controlling operation..

Maintenance concurrence is not required, as this work does not affect the maintenance of the structure.

The Resident Engineer recommends this change order be approved.

ADA Notice: For individuals with sensory disabilities, this document is available in alternate formats. For information call: (916) 654-6410 or TDD (916) 654-3880 or write Records and Forms Management, 1120 N Street, MS-89, Sacramento, CA 95814.

CONCURRED BY:			
Construction Engineer:	Mahantesh Anigol, Resident Engin	Date	12/11/06
Bridge Engineer:	Tom Ostrom, OSD	Date	7/31/06
Project Engineer:		Date	
Project Manager:	Ken Terpstra, SFOBB Project Man	Date	7/22/06
FHWA Rep.:		Date	
Environmental:		Date	
Other (specify):	Robert Kobal, HQ Asst. Constructi	Date	7/20/06
Other (specify):		Date	
District Prior Approval By:		Date	
HQ (Issue Approve) By:	Ken Darby, HQ CCO	Date	11/6/06
Resident Engineer's Signature:	M. U. Anigol	Date	12/11/06

ESTIMATE OF COST

	THIS REQUEST	TOTAL TO DATE
ITEMS	$0.00	$0.00
FORCE ACCOUNT	$240,000.00	$240,000.00
AGREED PRICE	$0.00	$0.00
ADJUSTMENT	$0.00	$0.00
TOTAL	$240,000.00	$240,000.00

FEDERAL PARTICIPATION

☑ PARTICIPATING ☐ PARTICIPATING IN PART ☐ NONE
☐ NON-PARTICIPATING (MAINTENANCE) ☐ NON-PARTICIPATING

FEDERAL SEGREGATION (if more than one Funding Source or P.I.P. type)
☑ CCO FUNDED PER CONTRACT ☐ CCO FUNDED AS FOLLOWS

FEDERAL FUNDING SOURCE	PERCENT

ADA Notice: For individuals with sensory disabilities, this document is available in alternate formats. For information call: (916) 654-6410 or TDD (916) 654-3880 or write Records and Forms Management, 1120 N Street, MS-89, Sacramento, CA 95814.

STATE OF CALIFORNIA - DEPARTMENT OF TRANSPORTATION

CONTRACT CHANGE ORDER

Change Requested by: Engineer

CCO 54	Suppl. No. 0	Contract No. 04 - 0120R4	Road SF-80-12.6/13.2	FED. AID LOC.: ACBRIM-080-1(097)N

To: **CC MYERS INC**

You are directed to make the following changes from the plans and specifications or do the following described work not included in the plans and specifications for this contract. ***NOTE: This change order is not effective until approved by the Engineer.***

Description of work to be done, estimate of quantities and prices to be paid. (Segregate between additional work at contract price, agreed price and force account.) Unless otherwise stated, rates for rental of equipment cover only such time as equipment is actually used and no allowance will be made for idle time. This last percentage shown is the net accumulated increase or decrease from the original quantity in the Engineer's Estimate.

Extra Work at Force Account:

As authorized by the Engineer, redesign the barrier rail incorporating the deck drainage barrier rail and scupper design drawings as per the attached plans and specifications. This redesign shall be incorporated into the deck drainage design as part of the Viaduct Superstructure submittal.

This work will be paid for in accordance with Section 5-1.24 "Force Account Payment" of the Special Provisions and Section 4-1.03D "Extra Work" of the Standard Specifications.

All work shall be performed in accordance with the Contract Plans and Specifications.

No time adjustment is warranted for this change as it does not affect the controlling operation.

Estimated cost of Extra Work at Force Account $8,000.00

Estimated Cost: **Increase** ☑ **Decrease** ☐ **$8,000.00**

By reason of this order the time of completion will be adjusted as follows: 0 days

Submitted by

Signature	Resident Engineer	Date
M U. Anigol	MAHANTESH ANIGOL	02/23/07

Approval Recommended by

Signature	Area Construction Manager	Date
	JASON TOM	2/23/07

Engineer Approval by

Signature	Area Construction Manager	Date
	JASON TOM	4/27/07

We the undersigned contractor, have given careful consideration to the change proposed and agree, if this proposal is approved, that we will provide all equipment, furnish the materials, except as may otherwise be noted above, and perform all services necessary for the work above specified, and will accept as full payment therefor the prices shown above.

NOTE: If you, the contractor, do not sign acceptance of this order, your attention is directed to the requirements of the specifications as to proceeding with the ordered work and filing a written protest within the time therein specified.

Contractor Acceptance by

Signature	(Print name and title)	Date
Dewey C Lee, Jr	DEWEY C. LEE JR. Contract Manager	4/4/07

DIST	COUNTY	ROUTE	KILOMETER POST TOTAL PROJECT	SHEET NO	TOTAL SHEETS
04	SF	80	12.6/13.2		

REGISTERED CIVIL ENGINEER

PLANS APPROVAL DATE

The State of California or its officers or agents shall not be responsible for the accuracy or completeness of electronic copies of this plan sheet.

Caltrans now has a web site! To get to the web site, go to: http://www.dot.ca.gov

Caltrans Metric

DATE	REVISED BY	DATE REVISED

CALCULATED/DESIGNED BY

CHECKED BY

DESIGN OVERSIGHT

T. T. LAI

STATE OF CALIFORNIA - DEPARTMENT OF TRANSPORTATION

Caltrans

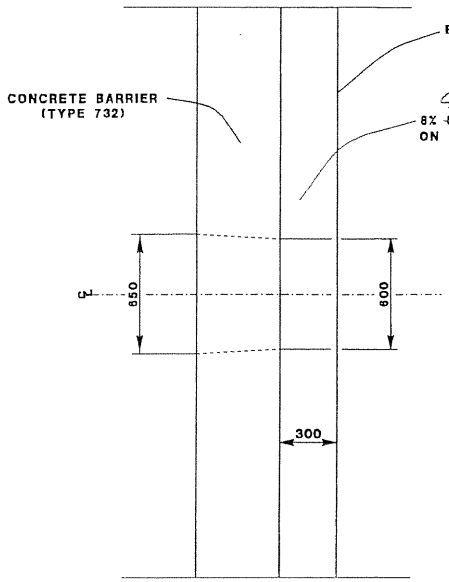

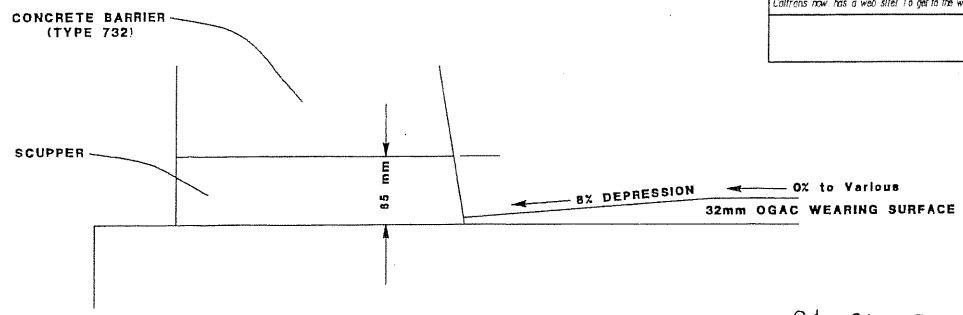

DETAIL A

CONTRACT NO. 04-012084

CONTRACT CHANGE ORDER NO. 54

sheet 2 of 6

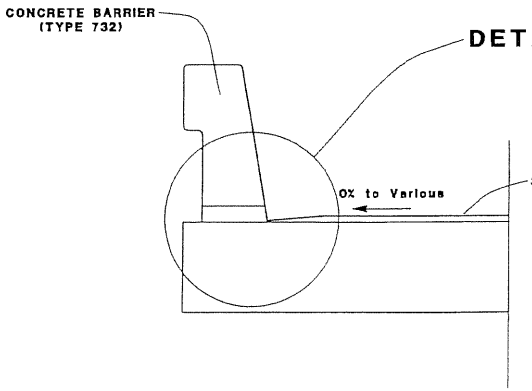

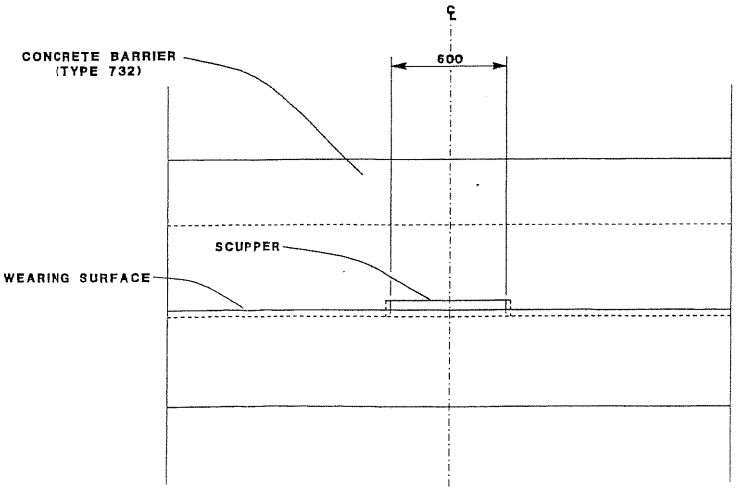

REGISTERED PROFESSIONAL ENGINEER
TRINH T. LAI
C 63630
EXP 9/30/06
CIVIL
STATE OF CALIFORNIA

ALL DIMENSIONS ARE IN MILLIMETERS UNLESS OTHERWISE SHOWN

CONSTRUCTION DETAIL
CONCRETE BARRIER SCUPPERS

NO SCALE

RELATIVE PAPER SCALE 0 20 40 60 80 | DGN FILE =) Scupper Detail (Latest).dgn

LAST REVISION | DATE PLOTTED =) 01-AUG-2006

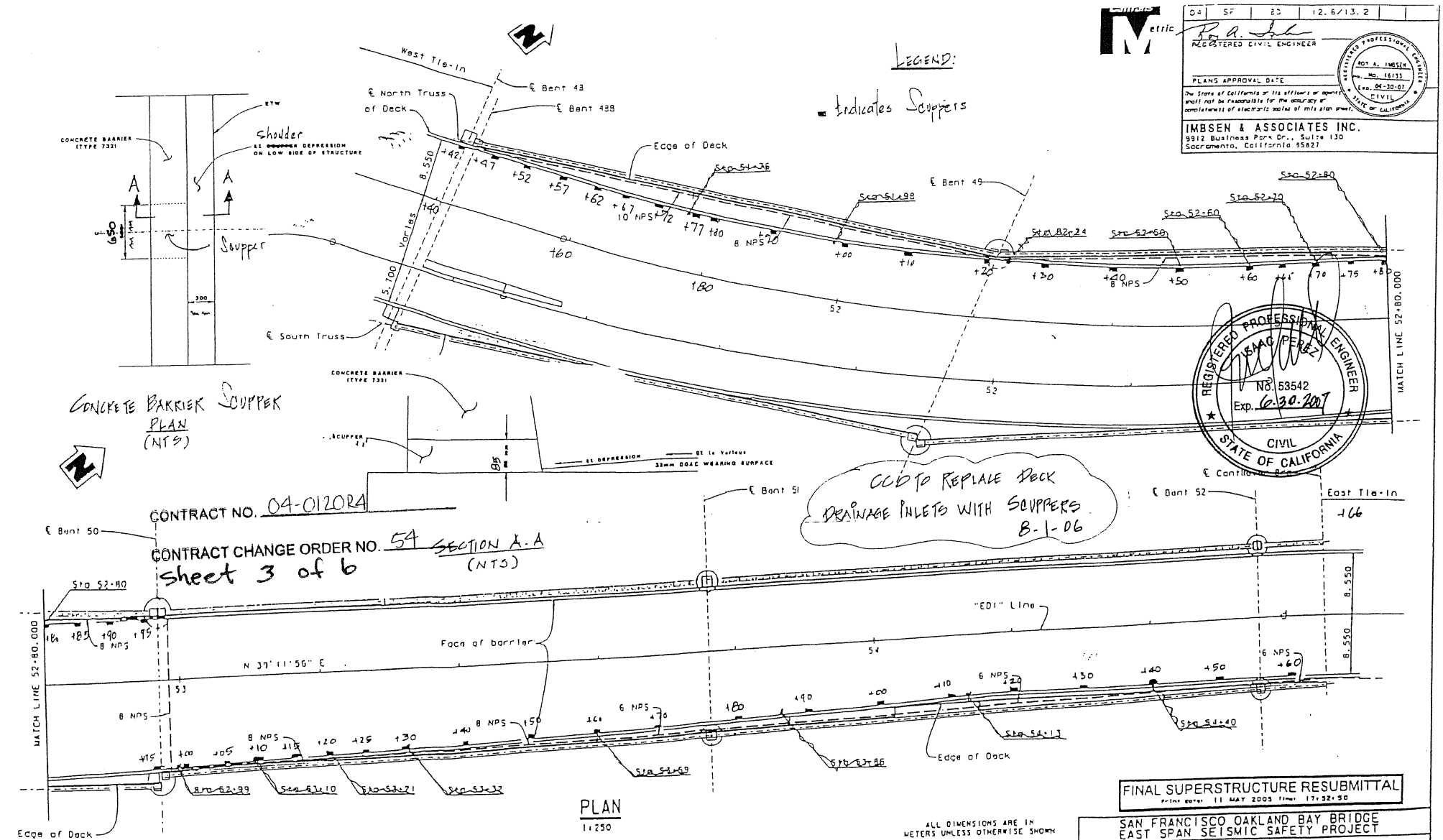

CONTRACT NO. 04-0120R4

CONTRACT CHANGE ORDER NO. 54 SECTION A-A (NTS)

Sheet 3 of 6

REGISTERED CIVIL ENGINEER

PLANS APPROVAL DATE

The State of California or its officers or agents shall not be responsible for the accuracy or completeness of electronic copies of this plan sheet.

IMBSEN & ASSOCIATES INC.
9912 Business Park Dr., Suite 130
Sacramento, California 95827

REGISTERED PROFESSIONAL ENGINEER
ROY A. IMBSEN
No. 16133
Exp. 06-30-07
CIVIL
STATE OF CALIFORNIA

REGISTERED PROFESSIONAL ENGINEER
ISAAC PEREZ
No. 53542
Exp. 6-30-2007
CIVIL
STATE OF CALIFORNIA

FINAL SUPERSTRUCTURE RESUBMITTAL
Print date: 11 MAY 2005 Time: 17:52:50

ALL DIMENSIONS ARE IN METERS UNLESS OTHERWISE SHOWN

SAN FRANCISCO OAKLAND BAY BRIDGE
EAST SPAN SEISMIC SAFETY PROJECT

VIADUCT

DECK DRAINAGE LAYOUT - EASTBOUND

PREPARED FOR THE STATE OF CALIFORNIA DEPARTMENT OF TRANSPORTATION

ROY A. IMBSEN
PROJECT MANAGER

DESIGN: J. GOMEZ
DETAILS: J. VALENTINE
QUANTITIES: C.C. MYERS
CHECKED: J. HOLMAN
CHECKED: L. SCHMEY
CHECKED: C.C. MYERS

CU
EA 0120R4

SHEET 102 OF 108

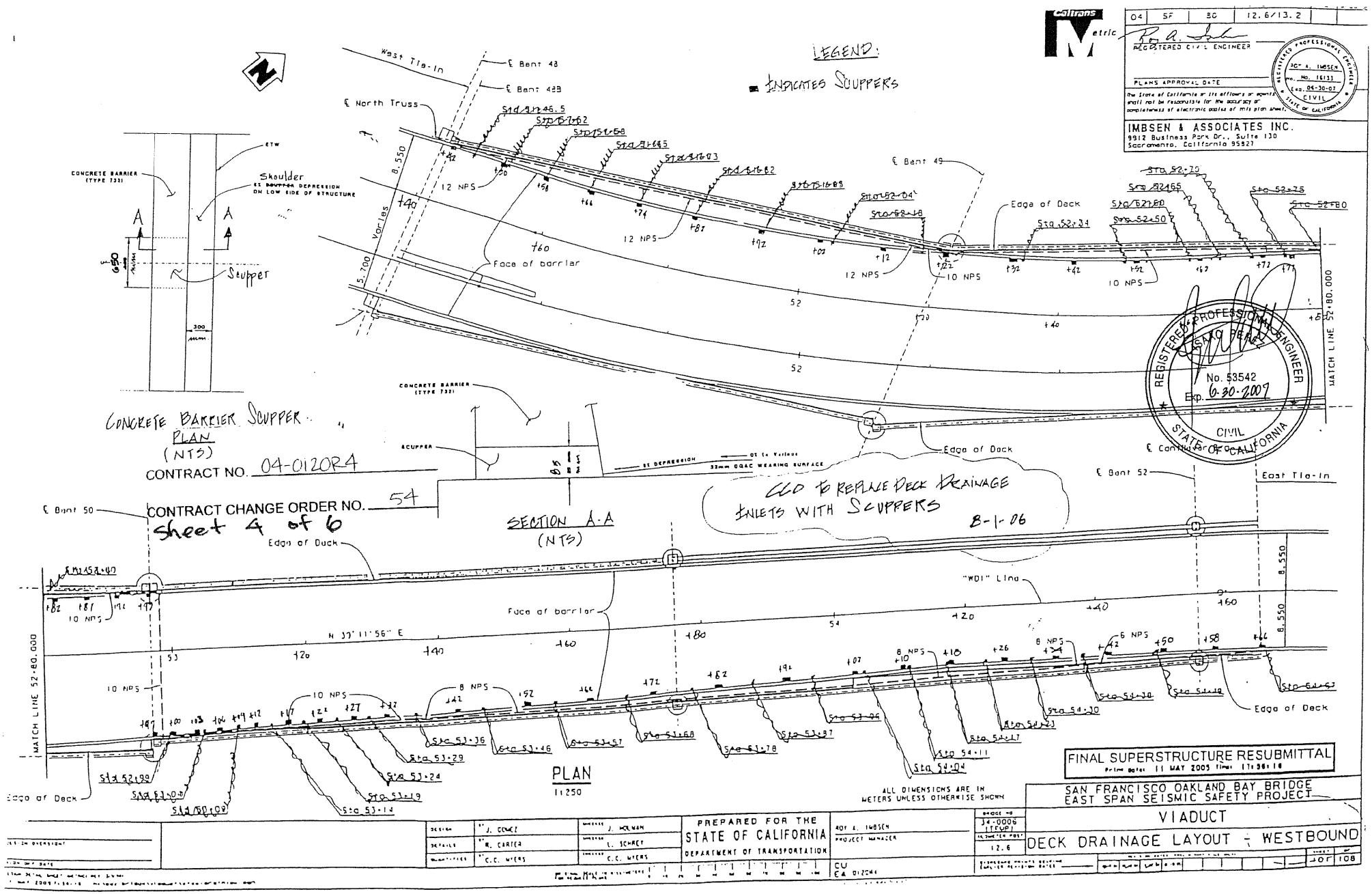

Caltrans Metric

04	SF	80	12.6/13.2

REGISTERED CIVIL ENGINEER

PLANS APPROVAL DATE

The State of California or its officers or agents shall not be responsible for the accuracy or completeness of electronic copies of this plan sheet.

REGISTERED PROFESSIONAL ENGINEER ROY A. IMBSEN No. 16133 Exp. 06-30-07 CIVIL STATE OF CALIFORNIA

IMBSEN & ASSOCIATES INC.
9912 Business Park Dr., Suite 130
Sacramento, California 95827

FINAL SUPERSTRUCTURE RESUBMITTAL
Print date: 11 MAY 2005 Time: 17:56:16

SAN FRANCISCO OAKLAND BAY BRIDGE
EAST SPAN SEISMIC SAFETY PROJECT

VIADUCT

DECK DRAINAGE LAYOUT - WESTBOUND

DESIGN	J. GOMEZ	J. HOLMAN	
DETAILS	R. CARTER	L. SCHREY	
QUANTITIES	C.C. MYERS	C.C. MYERS	

PREPARED FOR THE STATE OF CALIFORNIA DEPARTMENT OF TRANSPORTATION

ROY A. IMBSEN
PROJECT MANAGER

BRIDGE NO. 34-0006 (TEMP)
ALIGNMENT POST 12.6

CU
EA 0120R4

SHEET 108

0.6m x 0.075m scuppers into the barrier rail along the length of the Viaduct Superstructure in lieu of a conventional deck drain system. The opening at the face of the barrier shall be 600 mm with a wider opening of 625 mm on the back face.

The following table summarizes the spacing and location of the scuppers:

"WD1" Line (Upper Deck):

South Edge of Deck Limits	North Edge of Deck Limits	Spacing
54+65.3 – 54+02		8 m
54+02 – 53+32		10 m
53+32 – 52+89		3 m
	53+07 – 52+72	5 m
	52+72 – 51+82	10 m
	51+82 – 51+40.5	8 m

"ED1" Line (Lower Deck):

South Edge of Deck Limits	North Edge of Deck Limits	Spacing
54+65.3 – 53+30		10 m
53+30 – 52+94		5 m
	53+04 – 52+60	5 m
	52+60 – 51+80	10 m
	51+80 – 51+40.5	5 m

The proposed barrier rail shall be modified to incorporate this opening while maintaining its structural integrity.

CONTRACT NO. 04-0120R4

CONTRACT CHANGE ORDER NO. 54

SHEET 5 OF 6

Temporary Bypass Structure – Deck Drainage Design

The Construction and Project Development Offices requested the Hydraulics Branch to provide the Deck Drainage design for the Temporary Bypass Structure (TBS). It was agreed that the TBS drainage should be designed utilizing the most hydraulically efficient and less complex system. Non-standard geometrics, one-foot shoulders, 10.5 feet lane widths, were some of the constraints encountered in designing a drainage system taking into account hydraulics capacity, traffic safety, structural integrity, and maintenance. All these factors were evaluated and it was concluded that the design should only consider scuppers. Scuppers are openings in the concrete barrier through which water can flow from the bridge deck.

Design Criteria

- Storm Design Frequency and Design Spread – Considering that this is a temporary structure that will be utilized for approximately five years, it was determined that a 10-year design frequency should be appropriate. The spread of water should be kept within the proposed one-foot shoulder; thus, proper scupper spacing should be determined to prevent risks associated with water in traffic lanes. However, in certain segments of the structure where the cross slope approaches to zero (superelevation reversals), the spread of water will infringe into the traffic lanes. At these locations the depth of water on the roadway can be considered insignificant; nevertheless a traffic management measure should be ready for implementation in the event that the spread of water on the roadway becomes unsafe to motorists.
- Speed of traffic – Traffic speed was a concern presented to the Traffic Branch, and they agreed that a mandatory traffic speed of 45 MPH would be posted at the approach of the TBS. Hydroplaning is a function of speeds greater than 45 MPH, water depth, and condition of the pavement surface.
- Pavement Surface – The Hydraulics Branch also requested that the Materials Branch should be contacted to recommend a pavement surface that would reduce the hydroplaning potential on the TBS. The use of open-graded asphalt concrete (AC) has been shown to greatly reduce the hydroplaning potential of the roadway surface; this reduction is due to the ability of the water to be forced through the pavement under the tire.
- Use of Scuppers – When scuppers are used to release water into the air, care must be taken that no erosion or damage occurs underneath. Water should never be discharged onto an embankment surface that lacks erosion protection. In locations where the free fall exceeds about 25 feet, the natural air movement will disperse the water enough not to erode the ground surface.

STATE OF CALIFORNIA - DEPARTMENT OF TRANSPORTATION

CONTRACT CHANGE ORDER MEMORANDUM

DATE: 7/10/2006

TO: PETER SIEGENTHALER / JASON TOM	FILE: E.A. 04 - 0120R4
FROM: MAHANTESH ANIGOL	CO-RTE-PM SF-80-12.6/13.2
	FED. NO. ACBRIM-080-1(097)N
CCO#: 54 SUPPLEMENT#: 0 Category Code: CHPX	CONTINGENCY BALANCE (incl. this change) $28,821,810.51
COST: $8,000.00 INCREASE ☑ DECREASE ☐	HEADQUARTERS APPROVAL REQUIRED? ☐ YES ☑ NO
SUPPLEMENTAL FUNDS PROVIDED: $0.00	IS THIS REQUEST IN ACCORDANCE WITH ENVIRONMENTAL DOCUMENTS? ☑ YES ☐ NO
CCO DESCRIPTION: Deck Drainage Redesign	**PROJECT DESCRIPTION:** CONSTRUCT ROUTE 80 TEMP BYPASS STRUCTURE

Original Contract Time:	Time Adj. This Change:	Previously Approved CCO Time Adjustments:	Percentage Time Adjusted: (including this change)	Total # of Unreconciled Deferred Time CCO(s): (including this change)
475 Day(s)	0 Day(s)	381 Day(s)	80 %	6

THIS CHANGE ORDER PROVIDES FOR:

The Contractor to provide a redesign of the barrier rail by incorporating the deck drainage barrier rail and scupper design drawings as per the attached plans and specifications. This redesign shall be incorporated into the deck drainage design as part of the Viaduct Superstructure submittal.

This Contract requires that the Temporary Bypass Structure (TBS) be designed and constructed by the Contractor to detour traffic from the San Francisco Oakland Bay Bridge (SFOBB) to allow for the completion of the new east span. At the time of contract award, the proposed SFOBB corridor was scheduled for completion in late 2006, requiring the TBS to be completed in 2005. Due to extensions in the corridor schedule, the TBS detour will not be required to be in service until 2009 and its service life has been extended an additional 4 - 5 years, thereby increasing the number of rainy seasons the TBS must sustain.

Given the structure geometry and lane configuration (narrow lanes and shoulders) as shown on the Contract plans, the deck drainage as initially proposed indicated water encroachment onto the travel way, which is not allowed per Department design standards. Listed in the design criteria is the Class-1 Drainage requirement that does not allow the use of scuppers. However, Caltrans Hydraulics Design determined that the use of scuppers offered the best solution and therefore recommended that the Class-1 Drainage requirement be eliminated from the design criteria so that scuppers can be incorporated into the design.

This work will be done under extra work at force account for an estimated cost of $ 8,000.00, which can be financed from the contingency fund.

Maintenance concurrence has been granted to gently slope the one-foot shoulder to create additional storage, while considering traffic safety concerns.

Adjustment to contract time in not warranted as this change does not affect the controlling operation.

This change has been discussed with and concurred by Trinh Lai - Project Engineer,Toll Bridge Design, Isacc Perez - CT Hydraulics, and Ken Brown - Maintenance.

Approval of this change order is recommended by the Resident Engineer.

RECEIVED
005547 MAY -2 07

ADA Notice: For individuals with sensory disabilities, this document is available in alternate formats. For information call: (916) 654-6410 or TDD (916) 654-3880 or write Records and Forms Management, 1120 N Street, MS-89, Sacramento, CA 95814.

CONCURRED BY:		
Construction Engineer:	Mahantesh Anigol	Date
Bridge Engineer:		Date
Project Engineer:	Trinh Lai, Toll Bridge Design	Date 7/26/06
Project Manager:		Date
FHWA Rep.:		Date
Environmental:		Date
Other (specify):	Isacc Perez, Hydraulics	Date 7/26/06
Other (specify):	Ken Brown, Maintenance	Date 7/26/06
District Prior Approval By:		Date
HQ (Issue Approve) By:		Date
Resident Engineer's Signature:	M. U. Anigol	Date

ESTIMATE OF COST

	THIS REQUEST	TOTAL TO DATE
ITEMS	$0.00	$0.00
FORCE ACCOUNT	$8,000.00	$8,000.00
AGREED PRICE	$0.00	$0.00
ADJUSTMENT	$0.00	$0.00
TOTAL	$8,000.00	$8,000.00

FEDERAL PARTICIPATION

☐ PARTICIPATING ☐ PARTICIPATING IN PART ☑ NONE
☐ NON-PARTICIPATING (MAINTENANCE) ☐ NON-PARTICIPATING

FEDERAL SEGREGATION (if more than one Funding Source or P.I.P. type)
☑ CCO FUNDED PER CONTRACT ☐ CCO FUNDED AS FOLLOWS

FEDERAL FUNDING SOURCE PERCENT

ADA Notice: For individuals with sensory disabilities, this document is available in alternate formats. For information call: (916) 654-6410 or TDD (916) 654-3880 or write Records and Forms Management, 1120 N Street, MS-89, Sacramento, CA 95814.

CONTRACT CHANGE ORDER

Change Requested by: Engineer

CCO 55	Suppl. No. 0	Contract No. 04 - 0120R4	Road SF-80-12.6/13.2	FED. AID LOC.: ACBRIM-080-1(097)N

To: **CC MYERS INC**

You are directed to make the following changes from the plans and specifications or do the following described work not included in the plans and specifications for this contract. ***NOTE: This change order is not effective until approved by the Engineer.***

Description of work to be done, estimate of quantities and prices to be paid. (Segregate between additional work at contract price, agreed price and force account.) Unless otherwise stated, rates for rental of equipment cover only such time as equipment is actually used and no allowance will be made for idle time. This last percentage shown is the net accumulated increase or decrease from the original quantity in the Engineer's Estimate.

Adjustment of Compensation at Lump Sum:

In accordance with Section 4-1.03 "Changes" of the contract Standard Specifications, compensate the Contractor for all outstanding costs incurred due to Department delays concerning the steel fabrication of the Temporary Bypass Structure, Viaduct (Contract Bid Item No. 11) superstructure at Shanghai Grand Tower Steel Structure Co., Ltd (SGT), located in Shanghai, China and due to the eventual relocation of this fabrication work from SGT to Dongkuk Structures & Construction Co., Ltd (Dongkuk), located in South Korea.

For this work, the Contractor will be compensated a lump sum of $5,665,330.00. This sum constitutes full and final compensation, except as specifically excluded herein, for all outstanding costs, including all markups, incurred due to the termination and relocation of viaduct superstructure fabrication from SGT to Dongkuk.

Compensation provided herein includes, but is not limited to, the following costs:

1) All additional costs incurred by the Contractor pertaining to SGT due to Department delays to the work and the termination of the purchase agreement with SGT.
2) All costs incurred in transporting materials and relocating the fabrication work from SGT to Dongkuk.
3) All additional costs incurred by the Contractor due to the fabrication work being performed by Dongkuk in lieu of SGT.
4) All costs associated with any repairs or heat straightening concerning the materials delivered from SGT to Dongkuk.
5) All costs incurred by the Contractor concerning Imbsen & Associates, Inc. in the review of SGT working drawings.

This change order acts as full and final compensation for all additional costs incurred by the Contractor concerning their original purchase agreement with SGT, dated January 2, 2004, and the amendment to this purchase agreement, entered into as of May 19, 2006, that terminated this purchase agreement.

Compensation for the following 3 items are specifically excluded from this change order:

1) Direct costs incurred by the Engineer of Record, Imbsen & Associates, Inc, as they pertain to the design approval process concerning the Temporary Bypass Structure, Viaduct (Contract Bid Item No. 13) superstructure.
2) Costs incurred by Dongkuk due to Department changes to the Temporary Bypass Structure, Viaduct (Contract Bid Item No. 11) superstructure that were incurred after the Contractor entered into a purchase agreement with Dongkuk on June 2 2006 and that are unrelated to the relocation of the fabrication work from SGT to Dongkuk.
3) Costs incurred by Dongkuk due to any potential Department delays to the fabrication of the Temporary Bypass Structure Viaduct (Contract Bid Item No. 11) superstructure that were incurred after the Contractor entered into a purchase agreement with Dongkuk on June 2 , 2006.

Costs concerning structural steel purchased by Dongkuk that pertains to the Contractor's as-planned steel viaduct superstructure is deferred and shall be paid through a supplemental change order. Compensation shall be paid for steel purchased by Dongkuk and invoiced to the Contractor, as stated in Exhibit A, Item 3 of the June 2, 2006 purchase agreement with Dongkuk. A 10% materials markup shall be added to the invoiced cost.

CONTRACT CHANGE ORDER

Change Requested by: Engineer

CCO 55	Suppl. No. 0	Contract No. 04 - 0120R4	Road SF-80-12.6/13.2	FED. AID LOC.: ACBRIM-080-1(097)N

Compensation provided under this change order includes $653,895.53 in direct costs invoiced by Imbsen & Associates, Inc to the Contractor concerning the review of SGT's viaduct working drawings and no additional compensation shall be paid for this work. Costs concerning the review of Dongkuk working drawings concerning the viaduct are not compensated under this change order. These costs shall remain in dispute as they pertain to Notice of Potential Claim No. 10 concerning the responsibility for the review of working drawings.

Total Cost of Adjustment of Compensation at Lump Sum $5,665,330.00

Estimated Cost: Increase ☑ Decrease ☐ **$5,665,330.00**

By reason of this order the time of completion will be adjusted as follows: 0 days

Submitted by

Signature	Resident Engineer	Date
M. U. Anigol	MAHANTESH ANIGOL	7/3/07

Approval Recommended by

Signature	SFOBB Construction Manager	Date
P E Siegenthaler	PETER SIEGENTHALER	7/3/07

Engineer Approval by

Signature	SFOBB Construction Manager	Date
Michael Fromm	PETER SIEGENTHALER	7/18/07

We the undersigned contractor, have given careful consideration to the change proposed and agree, if this proposal is approved, that we will provide all equipment, furnish the materials, except as may otherwise be noted above, and perform all services necessary for the work above specified, and will accept as full payment therefor the prices shown above.

NOTE: If you, the contractor, do not sign acceptance of this order, your attention is directed to the requirements of the specifications as to proceeding with the ordered work and filing a written protest within the time therein specified.

Contractor Acceptance by

Signature	(Print name and title)	Date
D E Himick	DANIEL E. HIMICK, PRESIDENT	7/11/07

STATE OF CALIFORNIA - DEPARTMENT OF TRANSPORTATION

CONTRACT CHANGE ORDER MEMORANDUM

TO: PETER SIEGENTHALER / JASON TOM	FILE: **E.A.** 04 - 0120R4
FROM: MAHANTESH ANIGOL	**CO-RTE-PM** SF-80-12.6/13.2
	FED. NO. ACBRIM-080-1(097)N
CCO#: **55** SUPPLEMENT#: **0** Category Code: ~~CHXX~~	CONTINGENCY BALANCE (incl. this change) **$1,018,029.81**
COST: **$5,665,330.00** INCREASE ☑ DECREASE ☐	HEADQUARTERS APPROVAL REQUIRED? ☑ YES ☐ NO
SUPPLEMENTAL FUNDS PROVIDED: **$0.00**	IS THIS REQUEST IN ACCORDANCE WITH ENVIRONMENTAL DOCUMENTS? ☑ YES ☐ NO
CCO DESCRIPTION: Change in Viaduct Fabrication	**PROJECT DESCRIPTION:** CONSTRUCT ROUTE 80 TEMP BYPASS STRUCTURE

Original Contract Time:	Time Adj. This Change:	Previously Approved CCO Time Adjustments:	Percentage Time Adjusted: (including this change)	Total # of Unreconciled Deferred Time CCO(s): (including this change)
475 Day(s)	**0** Day(s)	**381** Day(s)	**80** %	**7**

THIS CHANGE ORDER PROVIDES FOR:

Compensation to the contractor for costs concerning the relocation of their viaduct steel fabrication operations from China to South Korea.

This contract was awarded on March 10, 2004 to construct a temporary detour for both eastbound and westbound I-80 traffic that allows for the tie in of the east span of the new San Francisco Oakland Bay Bridge (SFOBB) to Yerba Buena Island. The detour consist of three main structures, the East Tie-In (ETI) to the bridge, the West Tie-In (WTI) to the island and the Viaduct structure between the two tie-ins. The contract was awarded as a performance based project, with the contractor responsible for meeting the design criteria specified in the contract, and was bid to be completed in 475 calendar days at a cost of $78,759,650.

The contract incurred three suspensions of work over the periods from April 9, 2004 through July 9, 2004, due to delays in the completion of the Substation project, and from September 3, 2004 through April 16, 2006, due to delays to the start of the Self Anchored Suspension Bridge project. Contract Change Order No. 14 and No. 24 provided for these suspensions of work. While these suspensions affected progress of the work, the design approval process of the three main structures continued. This change order concerns both Department delays due to both the suspensions of the work and the approval of the design of the steel viaduct structure that resulted in the fabrication of the structure being moved from China to South Korea.

The construction of the steel viaduct structure was bid under Contract Item No. 11 at a lump sum of $27,740,000 and the design of the viaduct was included under Contract Item No. 13, at a lump sum of $5,000,000, that included the design of the viaduct and the east and west tie ins. The contractor originally entered into a purchase agreement with Shanghai Grand Tower Steel Structure Co., Ltd (SGT), located in Shanghai, China, to fabricate the contractor designed steel truss superstructure which would be shipped to the project site and erected on the concrete columns built in place. The agreement called for the 4 truss spans to be shipped between December 1, 2004 and January 15, 2005.

These Department induced suspensions and delays in the viaduct structure design approval process resulted in significant delays to the fabrication work and eventually led to the relocation of the fabrication from SGT to Dongkuk Structures & Construction Co., Ltd (Dongkuk), located in South Korea. The work suspensions and delays to the design approval resulted in the contractor missing their fabrication window at SGT. A chronology and details of the design approval delays are listed below:

1) Rejection of the Use of Pot Bearings:
The contractor's original design submittal for the steel viaduct included the use of fixed pot bearings between the steel truss and their connection to the columns. In July of 2004 the Department rejected the use of these bearings and in response the contractor resubmitted their design employing lead core bearings. This led to added complications to the design of the structure due to the different seismic response realized from the change in bearings. By January of 2005, the Department recognized that the use of pot bearings provided a more predictable structural performance than the substituted lead core bearings and the contractor was allowed to reincorporate the bearing into their design. It wasn't until April of 2005 that the pot bearings gained final acceptance in the incorporated design.

ADA Notice: For individuals with sensory disabilities, this document is available in alternate formats. For information call: (916) 654-6410 or TDD (916) 654-3880 or write Records and Forms Management, 1120 N Street, MS-89, Sacramento, CA 95814.

2) Floor Beam to Stringer Connection:
In December of 2004 the Department responded with numerous comments concerning the proposed connection of the floor beams to the stringers based on concerns regarding constructability and serviceability. By May of 2006, after 18 months of discussions with the designer, the Department elected to order design changes to the floor beam connection in order to satisfy the Department that the safety of the traveling public would be fully addressed. These design changes have now being implemented under Change Order No. 49.

3) Deck Drainage System:
The contractor's design proposed scuppers in the bridge deck to provide drainage for the structure's roadway. This proposal was rejected by the Department in May of 2004 based upon the contractual design criteria. After numerous iterations, the contractor stated their was no feasible alternatives to the proposed scuppers and the Department performed their own analysis. The result of this analysis was that it was determined that the design criteria, concerning the mandated cross slope and shoulders widths, provided in the contract didn't provide for adequate bridge drainage and the design criteria was amended to allow for the use of scuppers in the bridge deck. This issue wasn't fully resolved until June of 2006.

4) Department Adoption of Viaduct Design:
Throughout the viaduct design approval process, the Department had technical concerns and design preference differences with several components of the contractor's proposed design of the viaduct. Delays to the main SFOBB Self Anchored Suspension Bridge presented 2 issues to this project. First, it presented the probability of the detour structure being in use for a significantly longer period than originally anticipated. Second, it provided a schedule window that allowed for a more thorough design review to be conducted. These factors resulted in the Department ordering design changes concerning the floor beam and stringer connection (Change order No. 49) and the addition of bent caps to the as-planned columns (Change Order No. 50). While these changes will act to improve the structure's performance over its anticipated extended service life, they have also resulted in significant delays to the fabrication of the viaduct.

Based on these suspensions of the work and the design delays discussed above, the fabrication of the steel viaduct structure was significantly delayed. The contractor initially intended to begin fabrication work at SGT during the summer of 2004. The actual fabrication of the viaduct didn't fully begin until November of 2006.

By January of 2006, the contractor began notifying the Department that their SGT fabrication window was no longer guaranteed. At this time, SGT had received significant domestic contracts concerning the 2008 Olympics that, after 18 months of delays incurred due to the suspensions and design approval process, pushed the viaduct fabrication work off of their schedule. By April of 2006, the contractor had determined SGT could no longer guarantee delivery of the viaduct structure and an alternative fabricator, Dongkuk, was located in South Korea. This change order provides compensation for this fabrication relocation due to the significant Department delays to the approval of the proposed viaduct steel structure.

Compensation has been determined based upon Section 4-1.03 "Changes" of the Standard Specifications and a review of the original SGT purchase agreement, the close out SGT purchase agreement and the new Dongkuk purchase agreement. Major costs include delays costs incurred at SGT, additional labor and plant costs at Dongkuk inherent in move to a higher cost environment compared to China, transportation costs associated with shipping the purchased raw steel from Shanghai to Dongkuk's fabrication yard in South Korea and SGT shop drawing review costs incurred by the contractor's designer.

Compensation shall be paid as an Adjustment of Compensation at an Agreed Lump Sum of $5,665,330.00 that shall be financed from the contract's contingency fund. A cost analysis is on file.

Compensation concerning any structural steel purchase by Dongkuk required as part of the as-planned viaduct superstructure is deferred as these costs have not been quantified to date. The total costs of this deferred item is estimated to be less than $1,000,000.

This change order provides compensation for all costs incurred due to fabrication delays at SGT, the relocation of the fabrication work from SGT to Dongkuk and the transportation costs of all materials from SGT to Dongkuk. It is anticipated additional costs shall be claimed by the contractor concerning delays and changes to the fabrication of the viaduct steel truss at Dongkuk that occurred after June 2, 2006 when the purchase agreement with Dongkuk was signed. These costs shall be addressed through a subsequent change order.

Costs incurred by the Contractor's designer, Imbsen & Associates, Inc., pertaining to the viaduct design approval process are excluded from this change order. These costs are being addressed on a global basis, along with design approval costs associated with the East and West Tie-In structures, under Notice of Potential Claims No. 2, 3, 8, 9 and 16.

ADA Notice: For individuals with sensory disabilities, this document is available in alternate formats. For information call: (916) 654-6410 or TDD (916) 654-3880 or write Records and Forms Management, 1120 N Street, MS-89, Sacramento, CA 95814.

Despite the significant delays incurred to the viaduct steel fabrication, more extensive delays have been incurred to the design approval to the two tie-in structures with the design now being directed by the Department. No adjustment of contract time is warranted for this change as these tie-in structure designs are the controlling operation on the project.

Approval to negotiate this change was granted by the Toll Bridge Program Oversight Committee (TBPOC) in April 18, 2006. The total cost to terminate the SGT contract, relocate the fabrication to Dongkuk, and to implement the design changes to the viaduct was approved at a cost not to exceed $13,500,00.00. This change was discussed and concurred by Ken Terpstra - Project Manager on 6/7/07.

Maintenance concurrence is not required as the change order does not affect any permanent roadway features.

Supporting documents and information are on file at the office of the Resident Engineer.

CONCURRED BY:		
Construction Engineer:	Mahantesh Anigol, RE	Date 7/3/07
Bridge Engineer:		Date
Project Engineer:		Date
Project Manager:	Ken Terpstra	Date 6/7/07
FHWA Rep.:		Date
Environmental:		Date
Other (specify):	Robert Kobal, HQ Coordinator	Date 11/16/06
Other (specify):		Date
District Prior Approval By:		Date
HQ (Issue Approve) By:	Ken Darby, HQ CCO	Date 7/9/07
Resident Engineer's Signature:		Date
M U Anigol		7/3/07

ESTIMATE OF COST	THIS REQUEST	TOTAL TO DATE
ITEMS	$0.00	$0.00
FORCE ACCOUNT	$0.00	$0.00
AGREED PRICE	$0.00	$0.00
ADJUSTMENT	$5,665,330.00	$5,665,330.00
TOTAL	$5,665,330.00	$5,665,330.00

FEDERAL PARTICIPATION

☑ PARTICIPATING ☐ PARTICIPATING IN PART ☑ NONE
☐ NON-PARTICIPATING (MAINTENANCE) ☐ NON-PARTICIPATING

FEDERAL SEGREGATION (if more than one Funding Source or P.I.P. type)
☑ CCO FUNDED PER CONTRACT ☐ CCO FUNDED AS FOLLOWS

FEDERAL FUNDING SOURCE	PERCENT

ADA Notice: For individuals with sensory disabilities, this document is available in alternate formats. For information call: (916) 654-6410 or TDD (916) 654-3880 or write Records and Forms Management, 1120 N Street, MS-89, Sacramento, CA 95814.

STATE OF CALIFORNIA - DEPARTMENT OF TRANSPORTATION

CONTRACT CHANGE ORDER

Change Requested by: Engineer

CCO 55	Suppl. No. 1	Contract No. 04 - 0120R4	Road SF-80-12.6/13.2	FED. AID LOC.: ACBRIM-080-1(097)N

To: **CC MYERS INC**

You are directed to make the following changes from the plans and specifications or do the following described work not included in the plans and specifications for this contract. ***NOTE: This change order is not effective until approved by the Engineer.***

Description of work to be done, estimate of quantities and prices to be paid. (Segregate between additional work at contract price, agreed price and force account.) Unless otherwise stated, rates for rental of equipment cover only such time as equipment is actually used and no allowance will be made for idle time. This last percentage shown is the net accumulated increase or decrease from the original quantity in the Engineer's Estimate.

Adjustment of Compensation at Lump Sum:

Provide compensation to the Contractor for all costs associated with furnishing raw steel that was incurred due to the relocation of the steel Viaduct superstructure fabrication work of the Temporary Bypass Structure (Bridge No. 34-0006 (TEMP)) from Shanghai Grand Tower Steel Structure Co., Ltd (SGT) to Dongkuk Structures & Construction Co., LTD (Dongkuk) and to all Department ordered design enhancements to the Viaduct that were incorporated into the approved Viaduct plans dated October 9, 2006.

This change order provides full compensation for all costs associated with furnishing raw structural steel that was deferred under the original Contract Change Order No. 55 and for furnishing all raw steel due to the Department ordered design enhancements implemented under Contract Change Orders No. 49 and No. 50 that were incorporated into the approved Viaduct plans dated October 9, 2006.

This change order provides for full and final compensation of all costs associated with furnishing raw steel due to all Department delays, Department ordered design enhancements, and Department impacts to the design pertaining to the approved Viaduct plans dated October 9, 2006.

Compensation for any raw steel purchased due to Department design enhancements ordered under Contract Change Orders No. 50 and No. 67 that were incorporated into the approved Viaduct plans dated July 19, 2007 is not addressed by this change order.

Total Cost of Adjustment of Compensation at Lump Sum $980,600.00

Estimated Cost: **Increase** ☑ **Decrease** ☐ **$980,600.00**

By reason of this order the time of completion will be adjusted as follows: 0 days

Submitted by

Signature	Resident Engineer	Date
	BILL CASEY	1-21-08

Approval Recommended by

Signature	SFOBB Construction Manager	Date
Michael Frorner	MIKE FORNER	1-22-08

Engineer Approval by

Signature	SFOBB Construction Manager	Date
Mike Frorner	MIKE FORNER	3-17-08

We the undersigned contractor, have given careful consideration to the change proposed and agree, if this proposal is approved, that we will provide all equipment, furnish the materials, except as may otherwise be noted above, and perform all services necessary for the work above specified, and will accept as full payment therefor the prices shown above.

NOTE: If you, the contractor, do not sign acceptance of this order, your attention is directed to the requirements of the specifications as to proceeding with the ordered work and filing a written protest within the time therein specified.

Contractor Acceptance by

Signature	(Print name and title)	Date
	DANIEL E. HAMMER, PRESIDENT	3/13/08

STATE OF CALIFORNIA - DEPARTMENT OF TRANSPORTATION

CONTRACT CHANGE ORDER MEMORANDUM

TO: MIKE FORNER / DENNIS TURCHON	FILE: E.A. 04 - 0120R4
FROM: BILL CASEY	CO-RTE-PM SF-80-12.6/13.2
	FED. NO. ACBRIM-080-1(097)N
CCO#: 55 SUPPLEMENT#: 1 Category Code: CHXX	CONTINGENCY BALANCE (incl. this change) $89,927,792.86
COST: $980,600.00 INCREASE ☑ DECREASE ☐	HEADQUARTERS APPROVAL REQUIRED? ☑ YES ☐ NO
SUPPLEMENTAL FUNDS PROVIDED: $0.00	IS THIS REQUEST IN ACCORDANCE WITH ENVIRONMENTAL DOCUMENTS? ☑ YES ☐ NO
CCO DESCRIPTION: SGT to Dongkuk Material Closeout	**PROJECT DESCRIPTION:** CONSTRUCT ROUTE 80 TEMP BYPASS STRUCTURE

Original Contract Time:	Time Adj. This Change:	Previously Approved CCO Time Adjustments:	Percentage Time Adjusted: (including this change)	Total # of Unreconciled Deferred Time CCO(s): (including this change)
475 Day(s)	0 Day(s)	1195 Day(s)	252 %	7

THIS CHANGE ORDER PROVIDES FOR:

Compensation to the contractor for the costs of purchasing raw steel associated with the fabrication of the Viaduct structure.

This contract calls for construction of a temporary detour for both eastbound and westbound I-80 traffic that allows for the tie in of the east span of the new San Francisco Oakland Bay Bridge (SFOBB) to Yerba Buena Island. The detour consist of three main structures, the East Tie-In to the bridge, the West Tie-In to the island and the Viaduct structure between the two tie-ins. The contract was awarded as a performance based project with the contractor responsible for meeting the design criteria specified in the contract.

The original Contract Change Order No. 55 provided compensation for costs incurred in the relocation of the Viaduct fabrication work from Shanghai Grand Tower Steel Structure Co., Ltd (SGT) in China to Dongkuk Structures & Construction Co., LTD (Dongkuk) in South Korea. Costs associated with any additional raw steel purchases required to complete the as-planned fabrication work were deferred under that change order. This supplement compensates the contractor for those deferred costs which have now been documented.

Compensation is also provided for the cost of raw steel purchases associated with Department ordered design enhancements to the Viaduct that were incorporated into the contractor designed plan sheets under executed Change Orders No. 49 and 50. These changes concerned enhancements ordered to the steel truss concerning the connection of the floor beams and stringers and the addition of stopper blocks and brackets at the bent caps. Compensation for the raw steel costs are included under this supplement as the additional steel associated with the as-planned work and the ordered design enhancement were purchased together and are difficult to segregate (both quantitatively and administratively). Additional fabrication costs associated with design enhancements shall be compensated under a separate change order.

Compensation shall be paid as an adjustment of compensation at an agreed lump sum of $980,600.00 that will be financed from the contract's contingency fund. A cost analysis is on file.

The original Contract Change Order No. 55 was approved by the Toll Bridge Program Oversight Committee (TBPOC) on June 27, 2007. At that time, the deferred cost of furnishing raw steel covered under this supplement was approved at a cost not to exceed $1,000,000.00. Approximately $550,000.00 of the total $980,600.00 of costs is directly related to these deferred costs from the original change order with the remaining costs associated with the Department ordered design enhancements.

This change was concurred by Alec Melkonians - Asst. Project Manager.

Maintenance concurrence is not required as the change order doesn't affect any permanent roadway features.

ADA Notice: For individuals with sensory disabilities, this document is available in alternate formats. For information call: (916) 654-6410 or TDD (916) 654-3880 or write Records and Forms Management, 1120 N Street, MS-89, Sacramento, CA 95814.

CONCURRED BY:		
Construction Engineer:		Date
Bridge Engineer:		Date
Project Engineer:		Date
Project Manager:	Alec Melkonians	Date 3-17-08
FHWA Rep.:		Date
Environmental:		Date
Other (specify):	Robert Kobal, HQ Asst.Const.Coor	Date
Other (specify):		Date
District Prior Approval By:		Date
HQ (Issue Approve) By:	Ken Darby, HQ CCO Engineer	Date 1-24-08
Resident Engineer's Signature:		Date 1-21-08

ESTIMATE OF COST		
	THIS REQUEST	TOTAL TO DATE
ITEMS	$0.00	$0.00
FORCE ACCOUNT	$0.00	$0.00
AGREED PRICE	$0.00	$0.00
ADJUSTMENT	$980,600.00	$6,645,930.00
TOTAL	$980,600.00	$6,645,930.00

FEDERAL PARTICIPATION

☐ PARTICIPATING ☐ PARTICIPATING IN PART ☐ NONE
☐ NON-PARTICIPATING (MAINTENANCE) ☐ NON-PARTICIPATING

FEDERAL SEGREGATION (if more than one Funding Source or P.I.P. type)
☐ CCO FUNDED PER CONTRACT ☐ CCO FUNDED AS FOLLOWS

FEDERAL FUNDING SOURCE	PERCENT

ADA Notice: For individuals with sensory disabilities, this document is available in alternate formats. For information call: (916) 654-6410 or TDD (916) 654-3880 or write Records and Forms Management, 1120 N Street, MS-89, Sacramento, CA 95814.

CONTRACT CHANGE ORDER

Change Requested by: Engineer

CCO 56	Suppl. No. 0	Contract No. 04 - 0120R4	Road SF-80-12.6/13.2	FED. AID LOC.: ACBRIM-080-1(097)N

To: **CC MYERS INC**

You are directed to make the following changes from the plans and specifications or do the following described work not included in the plans and specifications for this contract. ***NOTE: This change order is not effective until approved by the Engineer.***

Description of work to be done, estimate of quantities and prices to be paid. (Segregate between additional work at contract price, agreed price and force account.) Unless otherwise stated, rates for rental of equipment cover only such time as equipment is actually used and no allowance will be made for idle time. This last percentage shown is the net accumulated increase or decrease from the original quantity in the Engineer's Estimate.

Adjustment of Compensation at Lump Sum:

In accordance with Section 4-1.03 "Changes" of the contract Standard Specifications and with the Dispute Review Board's recommendation pertaining to Notice of Potential Claim No. 3 "East Tie-In Design Criteria", provide compensation to the Contractor for additional costs incurred by the Contractor's subcontractor TRC Imbsen due to the Department's involvement in the design process concerning Contract Bid Item No. 13 "Contractor Design" and the eventual assumption of the design responsibility of the East Tie-In and West Tie-In structures by the Department.

For this work, the Contractor will be compensated a lump sum of $6,837,310.00 in addition to the lump sum price paid for Contract Bid Item No. 13. Except for outstanding costs pertaining to the 5 change orders mentioned below, this sum constitutes full and final compensation for all outstanding costs, both past and future, pertaining to work performed by TRC Imbsen, including all subsidiaries and subcontractors, and no additional compensation shall be paid concerning these costs.

Outstanding design and review costs, both past and future, incurred by TRC Imbsen associated with Department ordered design enhancements and design coordination implemented under Change Orders No. 49, No. 50, No. 67, No. 105, and No. 109 are excluded from this change order and shall be compensated under those respective change orders.

Except for the 3 items of work specifically excluded below, this change order resolves all outstanding costs associated with the following Notice of Potential Claims and no additional compensation shall be paid:

1) Notice of Potential Claim No. 2 – Bolted Connection Design Criteria
2) Notice of Potential Claim No. 3 – East Tie-In Design Criteria
3) Notice of Potential Claim No. 4 – Pile Dynamic Monitoring
4) Notice of Potential Claim No. 8 – Rejection of Viaduct Pot Bearing Design
5) Notice of Potential Claim No. 9 - Rejection of Viaduct Deck Drainage Design
6) Notice of Potential Claim No. 10 – Review & Approval of Shop Drawings
7) Notice of Potential Claim No. 11 – Testing of Micropiles
8) Notice of Potential Claim No. 14 – CIDH Pile Inspection
9) Notice of Potential Claim No. 16 – Department Involvement in Design Process

Costs associated with the 3 items of work listed below, as they pertain to the 9 notice of potential claims listed above, have not been addressed by this change order and shall remain outstanding:

1) Any outstanding escalation costs incurred by the Contractor or their subcontractor's, excluding TRC Imbsen, due to Department caused delays to the contract work.

2) Any outstanding costs associated with the fabrication and construction of the viaduct structure due to Department ordered design enhancements implemented under Change Orders No. 49, No. 50 and No. 67.

3) Any outstanding costs associated with the actual construction of the approved Viaduct deck drainage system.

The lump sum compensation provided under this change order includes direct compensation of $6,190,000.00 to TRC Imbsen for the full resolution of all outstanding costs incurred on Notice of Potential Claims No. 2, No. 3, No. 8, No. 9 and No. 16.

Total Cost of Adjustment of Compensation at Lump Sum $6,837,310.00

CONTRACT CHANGE ORDER

Change Requested by: Engineer

CCO 56	Suppl. No. 0	Contract No. 04 - 0120R4	Road SF-80-12.6/13.2	FED. AID LOC.: ACBRIM-080-1(097)N

Estimated Cost: Increase ☑ Decrease ☐ **$6,837,310.00**

By reason of this order the time of completion will be adjusted as follows: Deferred

Submitted by

Signature	Resident Engineer	Date
	BILL CASEY	3-12-08

Approval Recommended by

Signature		SFOBB Construction Manager	Date
	for:	MIKE FORNER	3/18/08

Engineer Approval by

Signature		SFOBB Construction Manager	Date
	for	MIKE FORNER	3/18/08

We the undersigned contractor, have given careful consideration to the change proposed and agree, if this proposal is approved, that we will provide all equipment, furnish the materials, except as may otherwise be noted above, and perform all services necessary for the work above specified, and will accept as full payment therefor the prices shown above.

NOTE: If you, the contractor, do not sign acceptance of this order, your attention is directed to the requirements of the specifications as to proceeding with the ordered work and filing a written protest within the time therein specified.

Contractor Acceptance by

Signature	(Print name and title)	Date
	DANIEL F. HOMICK, PRESIDENT	3/17/08

Quantification of the design costs, concerning the application of an appropriate markup and fee, was based on a recently approved consulting contract that the designer, TRC Imbsen, has with the Department. Consulting Services has also confirmed the markup and fee applied is appropriate.

In the review of the contractor's actual documented costs, a significant deduction was also made for perceived contractor design issues unrelated to the Department's involvement. These design issues most appropriately can be attributed to the revised design criteria of the ETI and numerous design issues related to the Viaduct structure. Additionally, submitted costs related to the NOPC's cost quantification and recovery were excluded in accordance with the contract specifications. The resulting compensation owed to the contractor, due to Department caused impacts and delays, was found to be $6,837,300. This sum includes interest and a subcontractor markup as defined within the contract's special provisions. A summary of this cost analysis is attached.

The project's funding agency the Bay Area Toll Authority has performed an independent analysis concerning the contractor's submitted costs which looked at the additional plan sheets required in the submittal review process. The analysis employed historical data reflecting typical design hours incurred per plan sheet. The result of the analysis supported the actual design hours documented by the contractor and resulted in a recommendation of compensation not to exceed $7,529,400.00.

This change order provides compensation in the amount of $6,837,310 for all Department changes and delays in the design process. Compensation shall be paid as an adjustment of compensation at an agreed lump sum of $6,837,310 which shall be financed from the contract's contingency funds. A detailed cost estimate is on file.

The change order will act to resolve all outstanding costs associated with the 9 NOPC's related to the design of the TBS. Escalation costs, excluding design costs, resulting from Department delays, costs associated with the Department's ordered design enhancements and costs associated with the approved deck drainage system aren't addressed by this change order. Costs associated with the Department ordered design enhancements shall be paid under the approved change orders specified for that work.

Adjustment of contract time is deferred as the involvement in the design process may affect the controlling operation.

Maintenance concurrence is not required as this is an administrative change and doesn't affect any permanent roadway features.

CONCURRED BY:		
Construction Engineer:	Date	
Bridge Engineer:	Date	
Project Engineer:	Date	
Project Manager:	Date	
FHWA Rep.:	Date	
Environmental:	Date	
Other (specify):	Date	
Other (specify):	Date	
District Prior Approval By:	Date	
HQ (Issue Approve) By: Elizabeth Dooher, Ast. Div. Chief	Date	2/15/08
Resident Engineer's Signature:	Date	3-12-08

ESTIMATE OF COST		
	THIS REQUEST	TOTAL TO DATE
ITEMS	$0.00	$0.00
FORCE ACCOUNT	$0.00	$0.00
AGREED PRICE	$0.00	$0.00
ADJUSTMENT	$6,837,310.00	$6,837,310.00
TOTAL	$6,837,310.00	$6,837,310.00

FEDERAL PARTICIPATION

☐ PARTICIPATING ☐ PARTICIPATING IN PART ☐ NONE
☐ NON-PARTICIPATING (MAINTENANCE) ☑ NON-PARTICIPATING

FEDERAL SEGREGATION (if more than one Funding Source or P.I.P. type)
☑ CCO FUNDED PER CONTRACT ☐ CCO FUNDED AS FOLLOWS

FEDERAL FUNDING SOURCE	PERCENT

ADA Notice: For individuals with sensory disabilities, this document is available in alternate formats. For information call: (916) 654-6410 or TDD (916) 654-3880 or write

1) The retrofit of a 350 foot section of the concrete deck approaching the Yerba Buena Tunnel was re-sequenced to be performed within the TBS project as opposed to a separate contract after traffic is placed on the new SFOBB.
2) The responsibility for the design of both the WTI and ETI structures were taken from the contractor and assumed by the Department.
3) Numerous design enhancements were ordered to the Viaduct in order to create a stand-alone structure.

This changed Department strategy was documented in a December 14, 2006 strategy memo that was approved by Tony Anziano, Toll Bridge Program Manager, Richard Land, Chief Engineer and the TBPOC.
3) Department Involvement in the Design Process -
During the same 2-year time period that the SAS was experiencing funding issues, the TBS project was experiencing it's own delays concerning the approval of the contractor's design submittals. These delays stemmed from conflicting interpretations of the contract design criteria and the Department's limited comfort level with the proposed design.

One of the more significant issues with the design of the TBS concerned the ETI structure. The contract design criteria for the ETI called for a roll out / roll in design where a new truss span would be constructed adjacent to the existing span. Once completed, the new span would be rolled into place after the existing span was rolled out. Upon the TBS bid opening in December of 2003, the 3 low bidders (of 4 total bidders) all submitted a design that called for the existing structure to be incorporated into the ETI structure as opposed to the roll out / roll in method called for in the plans. After considerable review of this design alternative, the concept was approved by the Department and the contract was awarded to the low bidder CC Myers Inc (CCM) in March of 2004.

This alternative design of the ETI resulted in continuous disputes between the contractor and the Department during the design and review process. One particular dispute (Notice of Potential Claim No 3), concerning the contractor's submittal of a revised design criteria for the alternative design, was brought to the project's Dispute Review Board (DRB). The DRB ruled that the Department's request for a revised design criteria was reasonable but found such fault with the Department's design review and approval process that they recommended the contractor's costs and any delays be compensated by the Department. The DRB commented that "the review process Caltrans employed in the CCM alternative design for the design criteria and for the design was sufficiently protracted, delayed, ambiguous, contradictory and confusing to cause CCM unreasonably delay and extra costs".

While the DRB determination was specific to the ETI design criteria, their observations concerning the Department's involvement in the design process are consistent with the review process of the entire TBS. The Department lacked a comfort level with the proposed design throughout the design process that the safety of the traveling public wasn't being fully addressed. While the extended SFOBB corridor schedule allowed for a more thorough review, these concerns eventually had to be addressed by assuming the design of the ETI and WTI structures and ordering enhancements to the Viaduct. Unfortunately, addressing these concerns often stepped outside of the contractual design criteria parameters.

Based on the Department's strategy memo discussed above, the contractor's design on the ETI and WTI was suspended by Change Order No. 52 and the Department assumed control over the design. Change Orders No. 49 and 50 were issued to compensate the contractor for design costs related to the ordered design enhancements to the Viaduct. These change orders covered only direct costs associated with the ordered enhancements and no compensation for impact costs resulting from the Department's prior review and approval process of the contractor's design submittals were addressed.

The contractor has submitted 9 separate Notices of Potential Claims (NOPC's) concerning the design of the TBS and the Department's involvement in the design process with all of these NOPC's initially being rejected based on merit. After the adverse DRB findings and recommendation concerning NOPC No. 3, these rejections have now been revisited. Based on the DRB's assessment of the Department's involvement in the design process, the extension of the SFOBB corridor schedule and the Department's eventual assumption of the design for the ETI and WTI, it has been determined that the Department's involvement in the contractor's design process constitutes a change in character of the contemplated work.

The total submitted cost of the 9 NOPC's was $9,158,570, including interest through January of 2007. These costs have been analyzed in accordance with Section 4-1.03 "Change in Character" of the Standard Specifications comparing as-planned cost to those actually incurred. Actual design costs were documented on both a daily and individual basis and subcontracted design costs were documented by the actual invoices billed to the designer. These costs have been found to be supportable based upon the Department's knowledge of the work performed within the design campus environment and by an independent analysis performed by the Bay Area Toll Authority (see below).

ADA Notice: For individuals with sensory disabilities, this document is available in alternate formats. For information call: (916) 654-6410 or TDD (916) 654-3880 or write

STATE OF CALIFORNIA - DEPARTMENT OF TRANSPORTATION

CONTRACT CHANGE ORDER MEMORANDUM

TO: MIKE FORNER / DENNIS TURCHON	FILE: E.A. 04 - 0120R4
	CO-RTE-PM SF-80-12.6/13.2
FROM: BILL CASEY	FED. NO. ACBRIM-080-1(097)N
CCO#: 56 SUPPLEMENT#: 0 Category Code: EXCB	CONTINGENCY BALANCE (incl. this change) $89,927,792.86
COST: $6,837,310.00 INCREASE ☑ DECREASE ☐	HEADQUARTERS APPROVAL REQUIRED? ☑ YES ☐ NO
SUPPLEMENTAL FUNDS PROVIDED: $0.00	IS THIS REQUEST IN ACCORDANCE WITH ENVIRONMENTAL DOCUMENTS? ☑ YES ☐ NO
CCO DESCRIPTION: Imbsen NOPC Closeout / Escalation Issues	**PROJECT DESCRIPTION:** CONSTRUCT ROUTE 80 TEMP BYPASS STRUCTURE

Original Contract Time:	Time Adj. This Change:	Previously Approved CCO Time Adjustments:	Percentage Time Adjusted: (including this change)	Total # of Unreconciled Deferred Time CCO(s): (including this change)
475 Day(s)	DEF Day(s)	1195 Day(s)	252 %	8

THIS CHANGE ORDER PROVIDES FOR:

compensation to the contractor for additional costs related to the contractor's performance based design process.

This project, the Temporary Bypass Structure (TBS), was awarded in March 2004 under a construction schedule that anticipated a traffic opening on the new east span of the San Francisco Oakland Bay Bridge (SFOBB) in late 2006. The TBS encompasses three main structures, the East Tie-In (ETI) to the existing bridge, the West Tie-In (WTI) to Yerba Buena Island and the Viaduct structure between the two tie ins. In order to facilitate the 2006 SFOBB milestone, and to implement a traffic switch as early as possible on to the transitional structure , several incentives and permissible delivery mechanisms were included in the TBS contract. These included an A + B bid specification to encourage an aggressive construction schedule and a performance based design criteria to allow contractor efficiencies.

Contract Bid Item No. 13 "Contractor Design" consisted of the contractor designing and providing detailed plan sheets, technical special provisions and quantities for the project's three main structures based upon the design criteria set forth in the contract. The contractor bid $5,000,000 to perform this work. The design process was specified to include 3 progressive design submittals called out as the preliminary design submittal, the final design submittal and the construction submittal with the Department able to review and provide comments to each submittal in order to ensure the design met the specified design criteria. The Department would then authorize the design for construction and the plans would become the contract plans for the project.

Based on a review of the CPM schedule and bid documents, the contractor planned on completing this design process and achieving authorization to construct within 9 months after the project's bid opening. The actual design work ending up taking 34 months to achieve authorization to construct the Viaduct with authorization never obtained for the ETI and WTI structures after over 30 months of design effort was expended. The reasons for this extended design period are outlined below:

1) Extended SFOBB Corridor Schedule –
After the award of the TBS project, the Self Anchored Suspension (SAS) structure, the signature structure of the east span SFOBB replacement, was significantly delayed due to funding issues that stemmed from it's May 2004 bid opening. This SAS delay continued into March of 2006 when a revised funding package was implemented and the contract was successfully re-bid. In April 2006 the revised SFOBB corridor schedule anticipated a westbound traffic opening in 2012 (6 years later than the original schedule).

This corridor delay resulted in construction activities on the TBS project being substantially suspended from September 2004 through January 2007. While the design process continued, the urgency to approve the design was eliminated and this allowed the Department additional time to review and comment on the proposed design.

2) Changed Department Strategy -
The extended delay to the corridor schedule presented challenges to the TBS project in that the Department, via the Toll Bridge Program Oversight Committee (TBPOC), expressed concern about the length of time traffic would be utilizing the TBS and indicated that the schedule should be adjusted to more closely tie the use of the transitional structure to the revised corridor schedule. This schedule adjustment along with the design disputes being realized led the Department to take the following action on the TBS project:

ADA Notice: For individuals with sensory disabilities, this document is available in alternate formats. For information call: (916) 654-6410 or TDD (916) 654-3880 or write

STATE OF CALIFORNIA - DEPARTMENT OF TRANSPORTATION

CONTRACT CHANGE ORDER

Change Requested by: Engineer

CCO: 57	Suppl. No. 0	Contract No. 04 - 0120R4	Road SF-80-12.6/13.2	FED. AID LOC.: ACBRIM-080-1(097)N

To: **CC MYERS INC**

You are directed to make the following changes from the plans and specifications or do the following described work not included in the plans and specifications for this contract. ***NOTE: This change order is not effective until approved by the Engineer.***

Description of work to be done, estimate of quantities and prices to be paid. (Segregate between additional work at contract price, agreed price and force account.) Unless otherwise stated, rates for rental of equipment cover only such time as equipment is actually used and no allowance will be made for idle time. This last percentage shown is the net accumulated increase or decrease from the original quantity in the Engineer's Estimate.

Adjustment of Compensation at Lump Sum:

Remove and dispose of United States Coast Guard Building No. 206, including the building foundation.

Building No. 206 contain asbestos and lead-based paint and shall be handled in accordance with the Special Provisions Section 10-1.38 and Section 7-1.06 "Safety and Health Provisions" of the Standard Specifications.

For demolishing and removing Building No. 206, the contractor is absolved of any responsibility to redesign and reconstruc a building of equal functional utility, as originally required per Special Provisions Section 10-1.38.

For this work the contractor will be paid the agreed lump sum of $22,377.60. This sum constitutes full compensation including all markups, for furnishing all labor, materials, tools, equipment and incidentals for doing all the work stated above in the change.

Estimated cost of Adjustment of Compensation at Lump Sum $22,377.60

Estimated Cost: **Increase** ☑ **Decrease** ☐ **$22,377.60**

By reason of this order the time of completion will be adjusted as follows: 0 days

Submitted by

Signature	Resident Engineer: MAHANTESH ANIGOL	Date 10/6/06
M.U. Anigol		

Approval Recommended by

Signature	Construction Engineer: MAHANTESH ANIGOL	Date 10/6/06
M.U. Anigol		

Engineer Approval by

Signature	(Print name and title) MAHANTESH ANIGOL - Construction Engineer	Date 10/16/06
M.U. Anigol		

We the undersigned contractor, have given careful consideration to the change proposed and agree, if this proposal is approved, that we will provide all equipment, furnish the materials, except as may otherwise be noted above, and perform all services necessary for the work above specified, and will accept as full payment therefor the prices shown above.

NOTE: If you, the contractor, do not sign acceptance of this order, your attention is directed to the requirements of the specifications as to proceeding with the ordered work and filing a written protest within the time therein specified.

Contractor Acceptance by

Signature	(Print name and title) DEWEY C. LEE JR. Contract Manager	Date 10/11/06
Dewey C Lee Jr		

STATE OF CALIFORNIA - DEPARTMENT OF TRANSPORTATION

CONTRACT CHANGE ORDER MEMORANDUM

DATE: 10/2/2006 Page 1 of 1

TO: JASON TOM / MAHANTESH ANIGOL	FILE: **E.A.** 04 - 0120R4
FROM: MAHANTESH ANIGOL	**CO-RTE-PM** SF-80-12.6/13.2
	FED. NO. ACBRIM-080-1(097)N
CCO#: **57** SUPPLEMENT#: **0** Category Code: **CGAX**	CONTINGENCY BALANCE (incl. this change) **$1,468,995.58**
COST: **$22,377.60** INCREASE ☑ DECREASE ☐	HEADQUARTERS APPROVAL REQUIRED? ☐ YES ☑ NO
SUPPLEMENTAL FUNDS PROVIDED: **$0.00**	IS THIS REQUEST IN ACCORDANCE WITH ENVIRONMENTAL DOCUMENTS? ☑ YES ☐ NO
CCO DESCRIPTION: Demolish Building 206	**PROJECT DESCRIPTION:** CONSTRUCT ROUTE 80 TEMP BYPASS STRUCTURE

LOCATION: IN THE CITY AND COUNTY OF SAN FRANCISCO FROM YERBA BUENA TUNNEL TO 0.6 KM EAST OF THE YERBA BUENA TUNNEL

THIS CHANGE ORDER PROVIDES FOR:

compensation for removal and disposal of United States Coast Guard Building No. 206 including the building foundation.

The Office of Toll Bridge Design provided a memorandum recommending a change order be written to demolish Building No. 206. After consulting with the United States Coast Guard and the Office of Right-of-Way, it was determined that Building No. 206 should be demolished at this time due to space constraints and constructability issues over the construction of the Temporary Bypass Structure.

Per agreement with the United States Coast Guard, the contractor is absolved of any responsibility to redesign and reconstruct a building of equal functional utility, as originally required per Special Provisions Section 10-1.38, for demolishing and removing Building No. 206.

Payment for the work of this change order will be at Adjustment of Compensation at an Agreed Lump Sum of $22,377.60. This price is found to be fair and reasonable based on a force account analysis submitted by the Contractor and verified by the Engineer. This analysis is on file.

No adjustment of contract time is warranted, as this change does not affect the controlling operations.

This change has been discussed with and concurred by Scott Peterein - United States Coast Guard and Mark Shindler - Office of Right-of-Way.

Maintenance concurrence is not required, as this work does not affect the maintenance of the structure.

The Resident Engineer recommends this change order be approved.

CONCURRED BY:	
Construction Engineer: Mahantesh Anigol	Date 10/6/06
Bridge Engineer:	Date
FHWA Representative:	Date
Project Engineer: Trinh Lai	Date 9/22/2006
Other (specify): Mark Shindler, Right-of-Way	Date 9/26/2006
Scott Peterein, U.S. Coast Guard	Date 9/26/2006
	Date
District Prior Approval By:	Date
HQ (Issue Approve) By:	Date
Resident Engineer's Signature: M. M. Anigol	Date 10/6/06

ESTIMATE OF COST

	THIS REQUEST	TOTAL TO DATE
ITEMS	$0.00	$0.00
FORCE ACCOUNT	$0.00	$0.00
AGREED PRICE	$0.00	$0.00
ADJUSTMENT	$22,377.60	$22,377.60
TOTAL	$22,377.60	$22,377.60

FEDERAL PARTICIPATION

☑ PARTICIPATING ☐ PARTICIPATING IN PART ☐ NONE
☐ NON-PARTICIPATING (MAINTENANCE) ☐ NON-PARTICIPATING

FEDERAL SEGREGATION (if more than one Funding Source or P.I.P. type)
☑ CCO FUNDED PER CONTRACT ☐ CCO FUNDED AS FOLLOWS

FEDERAL FUNDING SOURCE	PERCENT

CONTRACT CHANGE ORDER

Change Requested by: Engineer

CCO 58	Suppl. No. 1	Contract No. 04 - 0120R4	Road SF-80-12.6/13.2	FED. AID LOC.: ACBRIM-080-1(097)N

To: CC MYERS INC

You are directed to make the following changes from the plans and specifications or do the following described work not included in the plans and specifications for this contract. ***NOTE: This change order is not effective until approved by the Engineer.***

Description of work to be done, estimate of quantities and prices to be paid. (Segregate between additional work at contract price, agreed price and force account.) Unless otherwise stated, rates for rental of equipment cover only such time as equipment is actually used and no allowance will be made for idle time. This last percentage shown is the net accumulated increase or decrease from the original quantity in the Engineer's Estimate.

Extra Work at Force Account:

Provide additional funds to develop a detailed and expedited bridge removal plan for the existing concrete viaduct located between Bents 39 and 48. The Contractor shall utilize the necessary means and methods to achieve the desired goal of complete removal within a twenty-four (24) hour period.

No time adjustment is warranted for this change as it does not affect the controlling operation.

Estimated cost of Extra Work at Force Account $40,000.00

RECEIVED
06286 AUG -8 07

Estimated Cost: Increase ☑ Decrease ☐ **$40,000.00**

By reason of this order the time of completion will be adjusted as follows: 0 days

Submitted by

Signature	Resident Engineer	Date
M. U. Anigol	MAHANTESH ANIGOL	7/5/07

Approval Recommended by

Signature	Area Construction Manager	Date
William Cosby for J. Tom	JASON TOM	7-5-07

Engineer Approval by

Signature	Area Construction Manager	Date
William Cosby for J. Tom	JASON TOM	7-5-07

We the undersigned contractor, have given careful consideration to the change proposed and agree, if this proposal is approved, that we will provide all equipment, furnish the materials, except as may otherwise be noted above, and perform all services necessary for the work above specified, and will accept as full payment therefor the prices shown above.

NOTE: If you, the contractor, do not sign acceptance of this order, your attention is directed to the requirements of the specifications as to proceeding with the ordered work and filing a written protest within the time therein specified.

Contractor Acceptance by

Signature	(Print name and title)	Date
NOT APPLICABLE	N/A	N/A

STATE OF CALIFORNIA - DEPARTMENT OF TRANSPORTATION

CONTRACT CHANGE ORDER MEMORANDUM

DATE: 7/3/2007

TO: PETER SIEGENTHALER / JASON TOM	FILE: **E.A.** 04 - 0120R4
	CO-RTE-PM SF-80-12.6/13.2
FROM: MAHANTESH ANIGOL	**FED. NO.** ACBRIM-080-1(097)N
CCO#: **58** SUPPLEMENT#: **1** Category Code: **CHPA**	CONTINGENCY BALANCE (incl. this change) **$4,618,240.67**
COST: **$40,000.00** INCREASE ☑ DECREASE ☐	HEADQUARTERS APPROVAL REQUIRED? ☐ YES ☑ NO
SUPPLEMENTAL FUNDS PROVIDED: **$0.00**	IS THIS REQUEST IN ACCORDANCE WITH ENVIRONMENTAL DOCUMENTS? ☑ YES ☐ NO
CCO DESCRIPTION: Additional Funds Brdg. Removal Plan VIA	**PROJECT DESCRIPTION:** CONSTRUCT ROUTE 80 TEMP BYPASS STRUCTURE

Original Contract Time:	Time Adj. This Change:	Previously Approved CCO Time Adjustments:	Percentage Time Adjusted: (including this change)	Total # of Unreconciled Deferred Time CCO(s): (including this change)
475 Day(s)	**0** Day(s)	**381** Day(s)	**80** %	**7**

THIS CHANGE ORDER PROVIDES FOR:

additional funds to develop a detailed and expedited bridge removal plan for the existing concrete viaduct located between Bents 39 and 48. The Contractor shall utilize the necessary means and methods to achieve the desired goal of complete removal within a twenty-four (24) hour period. Once determination to implement said plan has been made, a forthcoming Contract Change Order will administer the costs of the actual work.

The Temporary Bypass Structure (TBS) is being constructed to detour traffic on existing Westbound and Eastbound I-80 to facilitate the completion of the new east span of the San Francisco-Oakland Bay Bridge. This Contract uses a performance based Contractor design and construct delivery method to expedite completion. The TBS is composed of three separate segments, the East Tie-In (ETI), the Viaduct, and the West Tie-In (WTI).

On June 14, 2006, the State formally notified the Contractor that the design responsibility for the ETI and WTI would be transferred from the Contractor to the State.

The type selection executed by the State for the WTI structure determined that the removal of the existing concrete viaduct and the "rolling-in" of a replacement structure would offer the best solution with regards to risk and impacts to future traffic. The original WTI plan as proposed by the Contractor did not require the replacement of the existing concrete viaduct.

As part of the selection process, a feasibility study must be completed to determine if the entire operation can be completed within a set time limit requiring the bridge removal plan be produced by the Contractor. The Office of Structure Design has requested that a Contract Change Order be executed to have the Contractor develop a detailed bridge removal plan as constructability analyses.

This work will be done under extra work at force account for an estimated cost of $ 40,000.00, which can be financed from the contingency fund.

The Contractor's signature is not required for additional funds for Extra Work at Force Account change orders. Therefore this change order is being issued unilaterally.

Maintenance concurrence is not required, as this work does not affect the maintenance of the structure.

No time adjustment in contract time will be made since this work is not a controlling item.

Supporting documents and information relative to this change order are on file at the Resident Engineer's office.

ADA Notice: For individuals with sensory disabilities, this document is available in alternate formats. For information call: (916) 654-6410 or TDD (916) 654-3880 or write Records and Forms Management, 1120 N Street, MS-89, Sacramento, CA 95814.

CONCURRED BY:		
Construction Engineer:	Manhantesh Anigol	Date 7/5/07
Bridge Engineer:	Tom Ostrom, OSD	Date 10/16/06
Project Engineer:	Hong Wong	Date 10/16/07
Project Manager:		Date
FHWA Rep.:		Date
Environmental:		Date
Other (specify):		Date
Other (specify):		Date
District Prior Approval By:		Date
HQ (Issue Approve) By:		Date
Resident Engineer's Signature:	M. U. Anigol	Date 7/5/07

ESTIMATE OF COST

	THIS REQUEST	TOTAL TO DATE
ITEMS	$0.00	$0.00
FORCE ACCOUNT	$40,000.00	$100,000.00
AGREED PRICE	$0.00	$0.00
ADJUSTMENT	$0.00	$0.00
TOTAL	$40,000.00	$100,000.00

FEDERAL PARTICIPATION

☐ PARTICIPATING ☐ PARTICIPATING IN PART ☑ NONE
☐ NON-PARTICIPATING (MAINTENANCE) ☐ NON-PARTICIPATING

FEDERAL SEGREGATION (if more than one Funding Source or P.I.P. type)
☑ CCO FUNDED PER CONTRACT ☐ CCO FUNDED AS FOLLOWS

FEDERAL FUNDING SOURCE	PERCENT

ADA Notice: For individuals with sensory disabilities, this document is available in alternate formats. For information call: (916) 654-6410 or TDD (916) 654-3880 or write Records and Forms Management, 1120 N Street, MS-89, Sacramento, CA 95814.

STATE OF CALIFORNIA - DEPARTMENT OF TRANSPORTATION

CONTRACT CHANGE ORDER

Change Requested by: Engineer

CCO 59	Suppl. No. 0	Contract No. 04 - 0120R4	Road SF-80-12.6/13.2	FED. AID LOC.: ACBRIM-080-1(097)N

To: **CC MYERS INC**

You are directed to make the following changes from the plans and specifications or do the following described work not included in the plans and specifications for this contract. ***NOTE: This change order is not effective until approved by the Engineer.***

Description of work to be done, estimate of quantities and prices to be paid. (Segregate between additional work at contract price, agreed price and force account.) Unless otherwise stated, rates for rental of equipment cover only such time as equipment is actually used and no allowance will be made for idle time. This last percentage shown is the net accumulated increase or decrease from the original quantity in the Engineer's Estimate.

Extra Work at Force Account:

Clean column cage reinforcement bars at bents 48, 51L, 52R, 52L, and 53R. Pressure wash reinforcement bars at bents 51L, 52R, and 52L to remove chlorides. Remove surface rust and concrete on exposed reinforcement bars at bents 48, and 53R. Cleaning shall be preformed prior to restarting work at these bents and reinforcement bars shall be protected from further corrosion.

This work will be paid for in accordance with Section 5-1.24 "Force Account Payment" of the Special Provisions and Section 4-1.03D "Extra Work" of the Standard Specifications.

Estimated cost of Extra Work at Force Account $5,000.00

005188 MAR-8 07

RECEIVED

Estimated Cost: Increase ☑ Decrease ☐ **$5,000.00**

By reason of this order the time of completion will be adjusted as follows: 0 days

Submitted by

Signature	Resident Engineer: MAHANTESH ANIGOL	Date
M. U. Anigol		01/09/07

Approval Recommended by

Signature	Construction Engineer: MAHANTESH ANIGOL	Date
M. U. Anigol		01/09/07

Engineer Approval by

Signature	(Print name and title) MAHANTESH ANIGOL - Construction Engineer	Date
M. U. Anigol		02/7/07

We the undersigned contractor, have given careful consideration to the change proposed and agree, if this proposal is approved, that we will provide all equipment, furnish the materials, except as may otherwise be noted above, and perform all services necessary for the work above specified, and will accept as full payment therefor the prices shown above.

NOTE: If you, the contractor, do not sign acceptance of this order, your attention is directed to the requirements of the specifications as to proceeding with the ordered work and filing a written protest within the time therein specified.

Contractor Acceptance by

Signature	(Print name and title)	Date
Dewey C. Lee, Jr.	DEWEY C. LEE JR Contract Manager	2/5/07

STATE OF CALIFORNIA - DEPARTMENT OF TRANSPORTATION

CONTRACT CHANGE ORDER MEMORANDUM

DATE: 11/21/2006 Page 1 of 1

TO: PETER SIEGENTHALER / JASON TOM	FILE: **E.A.** 04 - 0120R4
FROM: MAHANTESH ANIGOL	**CO-RTE-PM** SF-80-12.6/13.2
	FED. NO. ACBRIM-080-1(097)N
CCO#: **59** SUPPLEMENT#: **0** Category Code: **CHPR**	CONTINGENCY BALANCE (incl. this change) **$113,029.81**
COST: **$5,000.00** INCREASE ☑ DECREASE ☐	HEADQUARTERS APPROVAL REQUIRED? ☐ YES ☑ NO
SUPPLEMENTAL FUNDS PROVIDED: **$0.00**	IS THIS REQUEST IN ACCORDANCE WITH ENVIRONMENTAL DOCUMENTS? ☑ YES ☐ NO
CCO DESCRIPTION: Water Blast Rebar Cages	**PROJECT DESCRIPTION:** CONSTRUCT ROUTE 80 TEMP BYPASS STRUCTURE

Original Contract Time:	Time Adj. This Change:	Previously Approved CCO Time Adjustments:	Percentage Time Adjusted: (including this change)	Total # of Unreconciled Deferred Time CCO(s): (including this change)
475 Day(s)	**0** Day(s)	**381** Day(s)	**80** %	**7**

THIS CHANGE ORDER PROVIDES FOR:

Cleaning reinforcement bars for column cages at bents 48, 51L, 52R, 52L, and 53R of the Viaduct section prior to continuing work at these locations.

This Contract originally required that a Temporary Bypass Structure (TBS) be designed and constructed to facilitate the completion of the San Francisco-Oakland Bay Bridge corridor projects by the winter of 2006. The primary goal of the corridor projects is to achieve seismic safety as soon as possible. Due to extensions in the corridor schedule, the TBS will not be required to be in service until late 2009.

The Temporary Bypass Structure is a design and construct project. The Contractor suspended construction of the above-mentioned columns when the Department directed design changes to the contractor's original design. While design changes were being finalized, the reinforcement bars where exposed to the elements and suffered corrosion and chloride accumulation.

The reinforcement bars at bents 51L, 52R, and 52L have chloride accumulation and need to be pressure washed, and the reinforcement bars at bents 48 and 53R have rust and concrete residue and need to be blast cleaned.

This work has been recommend by Andy Rogerson - Office of Chemical Testing and Tom Ostrom - Office of Bridge Design.

This work is not covered under the contract items. Therefore, this work will be done under Extra Work at Force Account for an estimated total of $5,000.00, which can be financed from the contingency plan. A force account analysis is in the project files.

Adjustment to contract time in not warranted as this change does not affect the controlling operation.

CONCURRED BY:		
Construction Engineer:	Mahantesh Anigol MA	Date 01/09/07
Bridge Engineer:	Tom Ostrom, OSD	Date 11/16/06
Project Engineer:	Hong Wong, Project Engineer	Date 11/20/06
Project Manager:	Ken Terpstra, Project Manager	Date 11/20/06
FHWA Rep.:		Date
Environmental:		Date
Other (specify):	Andy Rogerson, Chem Testing	Date 11/16/06
Other (specify):		Date
District Prior Approval By:		Date
HQ (Issue Approve) By:		Date
Resident Engineer's Signature:		Date
M. A. Anigol		01/9/07

ESTIMATE OF COST

	THIS REQUEST	TOTAL TO DATE
ITEMS	$0.00	$0.00
FORCE ACCOUNT	$5,000.00	$5,000.00
AGREED PRICE	$0.00	$0.00
ADJUSTMENT	$0.00	$0.00
TOTAL	$5,000.00	$5,000.00

FEDERAL PARTICIPATION

☐ PARTICIPATING ☐ PARTICIPATING IN PART ☑ NONE
☐ NON-PARTICIPATING (MAINTENANCE) ☐ NON-PARTICIPATING

FEDERAL SEGREGATION (if more than one Funding Source or P.I.P. type)
☑ CCO FUNDED PER CONTRACT ☐ CCO FUNDED AS FOLLOWS

FEDERAL FUNDING SOURCE	PERCENT

ADA Notice: For individuals with sensory disabilities, this document is available in alternate formats. For information call: (916) 654-6410 or TDD (916) 654-3880 or write Records and Forms Management, 1120 N Street, MS-89, Sacramento, CA 95814.

STATE OF CALIFORNIA - DEPARTMENT OF TRANSPORTATION

CONTRACT CHANGE ORDER

Change Requested by: Engineer

CCO 59 Suppl. No. 1 Contract No. 04 - 0120R4 Road SF-80-12.6/13.2 FED. AID LOC.: ACBRIM-080-1(097)N

To: CC MYERS INC

You are directed to make the following changes from the plans and specifications or do the following described work not included in the plans and specifications for this contract. ***NOTE: This change order is not effective until approved by the Engineer.***

Description of work to be done, estimate of quantities and prices to be paid. (Segregate between additional work at contract price, agreed price and force account.) Unless otherwise stated, rates for rental of equipment cover only such time as equipment is actually used and no allowance will be made for idle time. This last percentage shown is the net accumulated increase or decrease from the original quantity in the Engineer's Estimate.

Extra Work at Force Account:

Provide additional funds to clean column cage reinforcement bars at bents 48, 51L, 52R, 52L, and 53R. Pressure wash reinforcement bars at bents 51L, 52R, and 52L to remove chlorides. Remove surface rust and concrete on exposed reinforcement bars at bents 48, and 53R. Cleaning shall be preformed prior to restarting work at these bents and reinforcement bars shall be protected from further corrosion.

This work will be paid for in accordance with Section 5-1.24 "Force Account Payment" of the Special Provisions and Section 4-1.03D "Extra Work" of the Standard Specifications.

Estimated Cost of Extra Work at Force Account $5,000.00

Estimated Cost: Increase ☑ Decrease ☐ $5,000.00

By reason of this order the time of completion will be adjusted as follows: 0 days

Submitted by

Signature	Resident Engineer	Date
	BILL CASEY	11-13-09

Approval Recommended by

Signature	Senior Resident Engineer	Date
	BILL CASEY	11-13-09

Engineer Approval by

Signature	Area Construction Manager	Date
Deanna Vilcheck	DEANNA VILCHECK	11/18/09

We the undersigned contractor, have given careful consideration to the change proposed and agree, if this proposal is approved, that we will provide all equipment, furnish the materials, except as may otherwise be noted above, and perform all services necessary for the work above specified, and will accept as full payment therefor the prices shown above.

NOTE: If you, the contractor, do not sign acceptance of this order, your attention is directed to the requirements of the specifications as to proceeding with the ordered work and filing a written protest within the time therein specified.

Contractor Acceptance by

Signature	(Print name and title)	Date
NOT APPLICABLE		

CONTRACT CHANGE ORDER

Change Requested by: Engineer

CCO: 59	Suppl. No. 2	Contract No. 04 - 0120R4	Road SF-80-12.6/13.2	FED. AID LOC.:

To: CC MYERS INC

You are directed to make the following changes from the plans and specifications or do the following described work not included in the plans and specifications for this contract. ***NOTE: This change order is not effective until approved by the Engineer.***

Description of work to be done, estimate of quantities and prices to be paid. (Segregate between additional work at contract price, agreed price and force account.) Unless otherwise stated, rates for rental of equipment cover only such time as equipment is actually used and no allowance will be made for idle time. This last percentage shown is the net accumulated increase or decrease from the original quantity in the Engineer's Estimate.

Extra Work at Force Account:

Provide additional funds.

Estimated cost of Extra Work at Force Account $15,000.00

Estimated Cost: Increase ☑ Decrease ☐ **$15,000.00**

By reason of this order the time of completion will be adjusted as follows: 0 days

Submitted by

Signature Deanna Vilcheck	Resident Engineer for BILL CASEY	Date 2/11/10

Approval Recommended by

Signature Deanna Vilcheck	Area Construction Manager DEANNA VILCHECK	Date 2/11/10

Engineer Approval by

Signature Deanna Vilcheck	Area Construction Manager DEANNA VILCHECK	Date 2/11/10

We the undersigned contractor, have given careful consideration to the change proposed and agree, if this proposal is approved, that we will provide all equipment, furnish the materials, except as may otherwise be noted above, and perform all services necessary for the work above specified, and will accept as full payment therefor the prices shown above.

NOTE: If you, the contractor, do not sign acceptance of this order, your attention is directed to the requirements of the specifications as to proceeding with the ordered work and filing a written protest within the time therein specified.

Contractor Acceptance by

Signature N/A	(Print name and title)	Date

STATE OF CALIFORNIA - DEPARTMENT OF TRANSPORTATION

CONTRACT CHANGE ORDER MEMORANDUM

DATE: 2/10/2010 Page 1 of 1

TO: MIKE FORNER / DEANNA VILCHECK	FILE: E.A. 04 - 0120R4
	CO-RTE-PM SF-80-12.6/13.2
FROM: BILL CASEY	FED. NO.
CCO#: 59 SUPPLEMENT#: 2 Category Code: CHPR	CONTINGENCY BALANCE (incl. this change) **$41,797,712.59**
COST: **$15,000.00** INCREASE ☑ DECREASE ☐	HEADQUARTERS APPROVAL REQUIRED? ☐ YES ☑ NO
SUPPLEMENTAL FUNDS PROVIDED: **$0.00**	IS THIS REQUEST IN ACCORDANCE WITH ENVIRONMENTAL DOCUMENTS? ☑ YES ☐ NO
CCO DESCRIPTION: Viaduct Rebar Cleaning	**PROJECT DESCRIPTION:** CONSTRUCT ROUTE 80 TEMP BYPASS STRUCTURE

Original Contract Time:	Time Adj. This Change:	Previously Approved CCO Time Adjustments:	Percentage Time Adjusted: (including this change)	Total # of Unreconciled Deferred Time CCO(s): (including this change)
475 Day(s)	0 Day(s)	1660 Day(s)	349 %	0

THIS CHANGE ORDER PROVIDES FOR:

Additional funding for the work defined under the original Change Order No. 59.

The original Change Order No. 59 along with Supplement No. 1 provided for the pressure washing and cleaning of reinforcing steel on the Viaduct structure that had been exposed to the elements over an extended period of time due to Department caused delays to the work. The existing funding has now been depleted and additional funds of $15,000 shall be required to complete the work.

The work shall be performed as extra work at force account at an estimated cost of $15,000 and shall be financed from the contract's contingency funds. A cost analysis is on file.

No adjustment of contract time is warranted as the work will not affect the controlling operation.

Maintenance concurrence is not required as this change order does not affect any permanent roadway features.
Concurrence received from Proj. Engr Minh Nguyen and Proj. Manager Alec Melkonians.

CONCURRED BY:		
Construction Engineer:	Bill Casey, Resident Engineer (for) DN	Date 2/11/10
Bridge Engineer:		Date
Project Engineer:	Minh B. Nguyen, PE	Date 2/10/10
Project Manager:	Alec Melkonians	Date 2/10/10
FHWA Rep.:		Date
Environmental:		Date
Other (specify):		Date
Other (specify):		Date
District Prior Approval By:		Date
HQ (Issue Approve) By:		Date
Resident Engineer's Signature:	Deanna Vilcheck for B. Casey	Date 2/11/10

ESTIMATE OF COST	THIS REQUEST	TOTAL TO DATE
ITEMS	$0.00	$0.00
FORCE ACCOUNT	$15,000.00	$25,000.00
AGREED PRICE	$0.00	$0.00
ADJUSTMENT	$0.00	$0.00
TOTAL	$15,000.00	$25,000.00

FEDERAL PARTICIPATION

☐ PARTICIPATING ☐ PARTICIPATING IN PART ☒ NONE
☐ NON-PARTICIPATING (MAINTENANCE) ☐ NON-PARTICIPATING

FEDERAL SEGREGATION (if more than one Funding Source or P.I.P. type)
☐ CCO FUNDED PER CONTRACT ☐ CCO FUNDED AS FOLLOWS

FEDERAL FUNDING SOURCE	PERCENT

ADA Notice: For individuals with sensory disabilities, this document is available in alternate formats. For information call: (916) 654-6410 or TDD (916) 654-3880 or write Records and Forms Management, 1120 N Street, MS-89, Sacramento, CA 95814.

CONTRACT CHANGE ORDER

Change Requested by: Engineer

CCO 60	Suppl. No. 0	Contract No. 04 - 0120R4	Road SF-80-12.6/13.2	FED. AID LOC.: ACBRIM-080-1(097)N

To: **CC MYERS INC**

You are directed to make the following changes from the plans and specifications or do the following described work not included in the plans and specifications for this contract. ***NOTE: This change order is not effective until approved by the Engineer.***

Description of work to be done, estimate of quantities and prices to be paid. (Segregate between additional work at contract price, agreed price and force account.) Unless otherwise stated, rates for rental of equipment cover only such time as equipment is actually used and no allowance will be made for idle time. This last percentage shown is the net accumulated increase or decrease from the original quantity in the Engineer's Estimate.

Extra Work at Lump Sum:

Furnish labor, equipment, material, supplies and other resources as required to modify the Viaduct portion of the South-South Detour Temporary Bypass Structure (Br. No. 34-0006 Temp.) in accordance with the attached plans and specifications (Sheets 3 through 25 of this Contract Change Order) prepared by the Contractor's Engineer under approved CCO No. 50.

The work includes the following:

1) Construct concrete bent caps at Bents 49R/L, 50R/L, 51R/L, and 52R/L.
2) Remove concrete and reconstruct columns at Bents 49R/L, 50R/L, and 51R.
3) Construct concrete stopper blocks and concrete pedestals at Bents 49R/L, 50R/L, 51R/L, and 52R/L.
4) Furnish and install steel stopper blocks at Bents 49R/L, 50R/L, 51R/L, and 52R/L.
5) Furnish and install bearing anchor bolts at Bents 49R/L, 50R/L, 51R/L, and 52R/L.

Items of work not included as part of this change order:

1) Furnish and install stopper blocks at Bents 49 R/L, 50R/L, 51R/L, and 52R/L that attach to the superstructure floor beams as shown on the attached plans shall be compensated for under separate change order.

2) Compensation for all additional SWPPP work associated with this change shall be compensated for separately.

3) Time related costs and impacts, if any, as a result of this change shall be compensated for under separate change orde

Consideration of a time adjustment will be deferred until completion of work specified herein. Determination of a commensurate time extension will be made in accordance with Section 8-1.07 Liquidated Damages of the Standard Specifications.

For this work, the Contractor will be paid the sum of $7,435,950.00. This amount constitutes full compensation, including all markups, for all labor, equipment, materials, and incidentals to complete the work of this change.

Total Cost of Extra Work at Lump Sum $7,435,950.00

CONTRACT CHANGE ORDER

Change Requested by: Engineer

CCO 60	Suppl. No. 0	Contract No. 04 - 0120R4	Road SF-80-12.6/13.2	FED. AID LOC.: ACBRIM-080-1(097)N

Estimated Cost: Increase ☑ Decrease ☐ **$7,435,950.00**

By reason of this order the time of completion will be adjusted as follows: Deferred

Submitted by

Signature	Resident Engineer	Date
M. U. Anigol	MAHANTESH ANIGOL	6/8/07

Approval Recommended by

Signature	SFOBB Construction Manager	Date
Michael O'Fearn FOR	PETER SIEGENTHALER	6/8/07

Engineer Approval by

Signature	SFOBB Construction Manager	Date
	PETER SIEGENTHALER	

We the undersigned contractor, have given careful consideration to the change proposed and agree, if this proposal is approved, that we will provide all equipment, furnish the materials, except as may otherwise be noted above, and perform all services necessary for the work above specified, and will accept as full payment therefor the prices shown above.

NOTE: If you, the contractor, do not sign acceptance of this order, your attention is directed to the requirements of the specifications as to proceeding with the ordered work and filing a written protest within the time therein specified.

Contractor Acceptance by

Signature	(Print name and title)	Date
	DANIEL E. HAMLICK, PRESIDENT	6/18/07

FINAL

SUPPLEMENTAL TECHNICAL SPECIAL PROVISIONS

FOR

PROJECT EA. NUMBER: 04-0120R4

DISTRICT-COUNTY-ROUTE-KP: 04-SF-80-12.6/13.2

DESCRIPTION: Temporary Bypass Structure/South-South Detour

KEY STRUCTURE NAME:

San Francisco-Oakland Bay Bridge Temporary Bypass Structure
Bridge Number 34-0006 (TEMP)

FINAL VIADUCT SEGMENT RE-SUBMITTAL CCO #50

STRUCTURES SUPPLEMENTAL TECHNICAL SPECIAL PROVISIONS BY:

Edward L. Tyk, P.E.
Imbsen & Associates, Inc.
9912 Business Park Drive, Suite 130
Sacramento, CA 95827-1724
etyk@imbsen.com
916/366-0632

The attached Supplemental Technical Special Provisions are forwarded for your use in preparing or coordinating the contract documents for the above project.

October 9, 2006

CONTRACT NO. 04-0120R4

CONTRACT CHANGE ORDER NO 60

58.98

SHEET 3 OF 25

04-0120R4
04-SF-80-12.6/13.2

The Supplemental Technical Special Provisions contained herein have been prepared by or under the direction of the following Registered Person.

STRUCTURES

Edward L Tyk 11/2/06

Edward L. Tyk, P.E.; Registration Expires December 31, 2007

CONTRACT NO. 04-012024

CONTRACT CHANGE ORDER NO 60

SHEET 4 OF 25

10-5.02 GENERAL DEFINITIONS OF EXISTING HIGHWAY FACILITIES WORK

TYPE OF WORK	DEFINITION
REMOVE	Remove and dispose of.
ABANDON	Render unserviceable, in place, by doing some kind of work.
SALVAGE	Remove, clean, haul, unload, and stack neatly at recycle center.
RESET	Remove and install or place at same station location. May be moved laterally only. No alteration required.
RELOCATE	Remove and install or place in a new location. No alteration required.
RECONSTRUCT	Remove and disassemble and construct again at an existing or new location. New parts or alteration may or may not be required.
ADJUST	Raise or lower a facility to match a new grade line. Generally associated with raising frame and grate or frame and cover of facilities on resurfacing projects. May require some removal. Includes raising or lowering of frame and cover or frame and grate of concrete or brick manholes or circular precast concrete pipe structures by adding or subtracting raising devices only. Any changes to taper of manhole or steps is "remodel."
MODIFY	A change which does not affect the basic framework or structure with an addition and/or subtraction to an appurtenant part. May require some removal. Includes raising or lowering frame and cover or frame and grate of drainage inlets by removing concrete or adding concrete.
REMODEL	Rebuild facility in same location. May require some removal.
RELAY	Remove and lay in an existing or new location. Generally used for pipes or culverts and appurtenances.

10-5.03 RECONSTRUCT SANITARY SEWER

Existing sanitary sewer, at the location shown on the plans, shall be removed and reconstructed to conform to the details shown on the City and County of San Francisco, Department of Public Works, Standard Plans and in accordance with the provisions of the City and County of San Francisco, Department of Public Works, Standard Specifications and these special provisions.

Full compensation for removing and disposing of the existing sanitary sewer and then reconstructing sanitary sewer in its new location shall be considered as included in the contract prices paid for the various items of work involved and no separate payment will be made therefor.

CCO #60

10-5.04 BRIDGE REMOVAL

Removing portions of the As-Built Viaduct substructure shall conform to the provisions in Section 15-4, "Bridge Removal," of the Standard Specifications, the special provisions, and these STSP.

The upper portion, as shown on the plans, of the columns in Bent 49, Bent 50, Bent 51, and Bent 52 shall be removed.

Removed materials that are not to be salvaged or used in the reconstruction shall become the property of the Contractor and shall be disposed of in conformance with the provisions in Section 7-1.13, "Disposal of Material Outside the Highway Right of Way," of the Standard Specifications.

10-5.05 ASPHALT CONCRETE

Asphalt concrete shall be Type Open Graded and shall conform to the provisions in Section 39, "Asphalt Concrete," of the Standard Specifications dated May 2006, the special provisions, and these STSP.

Open graded asphalt concrete may be placed when the atmospheric temperature is below 20° C, but above 10° C, provided the following requirements are met:

A. The aggregate grading shall be 12.5-mm maximum.
B. Open graded asphalt concrete shall not be placed in stockpile. Open graded asphalt concrete shall be transferred directly from the hauling vehicle to the asphalt paver hopper.
C. Open graded asphalt concrete shall be not less than 30-mm in compacted thickness except at scuppers as shown on the plans.

consecutive days, and there are no mass concrete elements to be cast adjacent. Data shall be printed and submitted to the Engineer daily.

Methods of concrete consolidation shall prevent damage to the temperature monitoring and recording system. Wiring from temperature sensors cast into the concrete shall be protected to prevent movement. Wire runs shall be kept as short as possible. The ends of the temperature sensors shall not come into contact with either a support or concrete form, or bar reinforcing steel.

When any equipment used in the temperature control and monitoring and recording system fails during the mass concrete construction operation, the Contractor shall take immediate measures to correct the situation as specified in the Thermal Control Plan. Failure to conform to the temperature requirements will be cause for rejection of the concrete.

Acceptance

Mass concrete shall conform to the concrete acceptance criteria and the following temperature requirements:

A. The maximum allowable temperature of mass concrete shall not exceed 70°C.
B. The maximum temperature differential of mass concrete shall not exceed the requirement as determined in the Thermal Control Plan.

If the Contractor fails to conform to any of the temperature requirements above, the mass concrete elements shall be rejected. The rejected mass concrete shall be removed at the Contractor's expense. The Contractor shall modify the Thermal Control Plan and design calculations to correct the problem and resubmit the revised Thermal Control Plan.

The Contractor shall allow the Engineer 2 weeks for review and approval of the revised Thermal Control Plan. Mass concrete placement shall not begin until the Engineer has approved the revised Thermal Control Plan. No extension of time or compensation will be made for any rejected mass concrete element or revisions of the Thermal Control Plan.

Mass concrete will not be measured for payment.

Full compensation for conforming to the above requirements shall be considered as included in the contract prices paid for the various items of work involved and no additional compensation will be allowed therefor.

FALSEWORK

Falsework shall conform to the provisions in Section 51, "Concrete Structures," of the Standard Specifications and these STSP.

Where falsework is supported on the deck of a structure, construction shall conform to the following:

A. Falsework shall bear directly on the girder stems or bent caps of the supporting structure or shall bear on falsework sills which are structurally adequate to transmit the load to the stems or cap without stress to the deck slab.
B. Additional falsework shall be in place beneath the supporting structure whenever construction loads are imposed upon the supporting structure. Such additional falsework shall be designed and constructed to support all construction loads imposed upon the supporting structure from the upper structure.

CCO #60

Welding and Nondestructive Testing

Welding of steel members, except for previously welded splices and except for when fillet welds are used where load demands are less than or equal to 175 N/mm for each 3 mm of fillet weld, shall conform to AWS D1.1 or other recognized welding standard. The welding standard to be utilized shall be specified by the Contractor on the working drawings. Previously welded splices for falsework members are defined as splices made prior to the member being shipped to the project site.

Splices made by field welding of steel beams at the project site shall undergo nondestructive testing (NDT). At the option of the Contractor, either ultrasonic testing (UT) or radiographic testing (RT) shall be used as the method of NDT for each field weld and any repair made to a previously welded splice in a steel beam. Testing shall be performed at locations selected by the Contractor. The length of a splice weld where NDT is to be performed, shall be a cumulative weld length equal to 25 percent of the original splice weld length. The cover pass shall be ground smooth at the locations to be tested. The acceptance criteria shall conform to the requirements of AWS D1.1, Section 6, for cyclically loaded nontubular connections subject to tensile stress. If repairs are required in a portion

CCO #60

of the weld, additional NDT shall be performed on the repaired sections. The NDT method chosen shall be used for an entire splice evaluation including any required repairs.

For all field welded splices, the Contractor shall furnish to the Engineer a letter of certification which certifies that all welding and NDT, including visual inspection, are in conformance with the specifications and the welding standard shown on the approved working drawings. This letter of certification shall be signed by an engineer who is registered as a Civil Engineer in the State of California and shall be provided prior to placing any concrete for which the falsework is being erected to support.

For previously welded splices, the Contractor shall determine and perform all necessary testing and inspection required to certify the ability of the falsework members to sustain the stresses required by the falsework design. This welding certification shall be in writing, shall be signed by an engineer who is registered as a Civil Engineer in the State of California, and shall be provided prior to placing any concrete for which the falsework is being erected to support.

The Contractor's Construction Engineer who signs the falsework drawings shall also certify in writing that the falsework is constructed in conformance with the approved drawings and the contract specifications prior to placing concrete. This certification shall include performing any testing necessary to verify the ability of the falsework members to sustain the stresses required by the falsework design. The engineer who signs the drawings may designate a representative to perform this certification. Where falsework contains openings for railroads, vehicular traffic, or pedestrians, the designated representative shall be qualified to perform this work, shall have at least three years of combined experience in falsework design or supervising falsework construction, and shall be registered as a Civil Engineer in the State of California. For other falsework, the designated representative shall be qualified to perform this work and shall have at least three years of combined experience in falsework design or supervising falsework construction. The Contractor shall certify the experience of the designated representative in writing and provide supporting documentation demonstrating the required experience if requested by the Engineer.

PERMANENT STEEL DECK FORMS

Forms for the deck slabs between girders, shown as permanent corrugated steel deck forms on the plans, shall be constructed and left in place at those locations shown on the plans in conformance with these STSP. Exposed metal deck used for the upper deck of the Viaduct Segment shall have a noise-reducing coating as designated in the special provisions.

Forms for the deck slabs between stringers of the Temporary Bypass Structure, at the option of the Contractor, shall either be constructed and removed as provided in Section 51-1.05, "Forms," of the Standard Specifications, or shall be constructed and left in place in conformance with these STSP.

Permanent steel deck forms and supports shall be steel conforming to the requirements in ASTM Designation: A 653/A 653M (Designation SS, Grades 33 through 80) having a coating designation G 90. The forms shall be mortar-tight, true to line and grade, and of sufficient strength to support the loads applied.

Detailed working drawings for forms shall be submitted to the Engineer for approval in conformance with the provisions in Section 5-1.02, "Plans and Working Drawings," of the Standard Specifications. Three sets of drawings shall be submitted. These drawings shall show the grade of steel, the physical and section properties for all deck members, the method of support and grade adjustment, accommodation for skew, and methods of sealing against grout leaks.

Working drawings shall be submitted sufficiently in advance of the start of the affected work to allow time for review by the Engineer and correction by the Contractor of the drawings without delaying the work. Such time shall be proportional to the complexity of the work but in no case shall such time be less than 3 weeks after complete drawings and all support data are submitted.

The design of permanent steel deck forms shall be based on the combined dead load of the forms, reinforcement, and plastic concrete plus an allowance for all anticipated construction loads. The allowance for construction loads prior to concrete placement shall be not less than 2400 Pa. The allowance for construction loads during concrete placement shall not be less than 960 Pa. The combined dead load shall be assumed to be not less than 2560 kg/m^3 for normal concrete and not less than 2080 kg/m^3 for lightweight concrete.

Physical design properties shall be computed in conformance with the requirements of the AISI specification for the "Design of Cold Formed Steel Structural Members."

The maximum allowable stresses and deflections used in the design of steel forms shall be as follows:

A. Tensile stress shall not exceed 0.725 of the specified yield strength of the material furnished or 250 MPa.
B. Deflection due to dead load shall not exceed 0.0056 of form span or 13 mm, whichever is less. In no case shall the dead load for deflection calculations be less than 5750 Pa (120 psf).

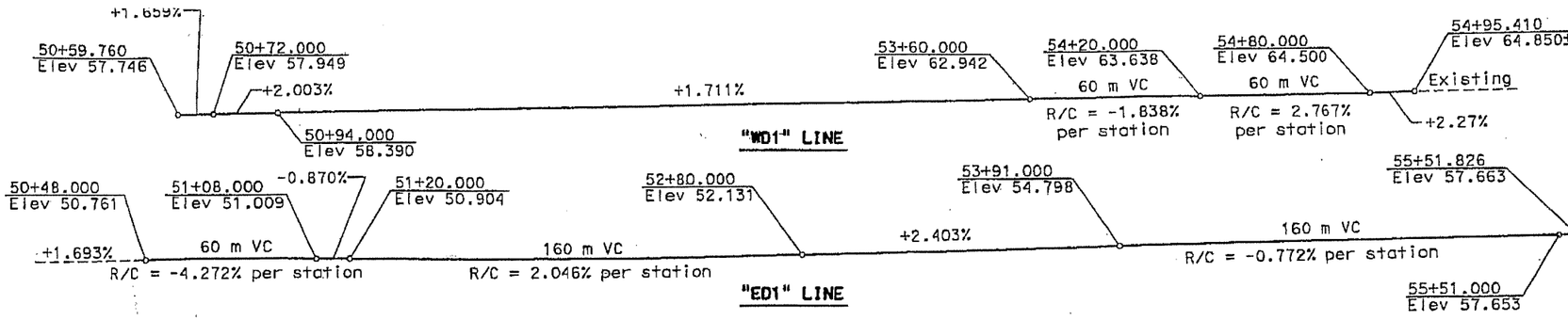

PROFILE GRADE

NO SCALE

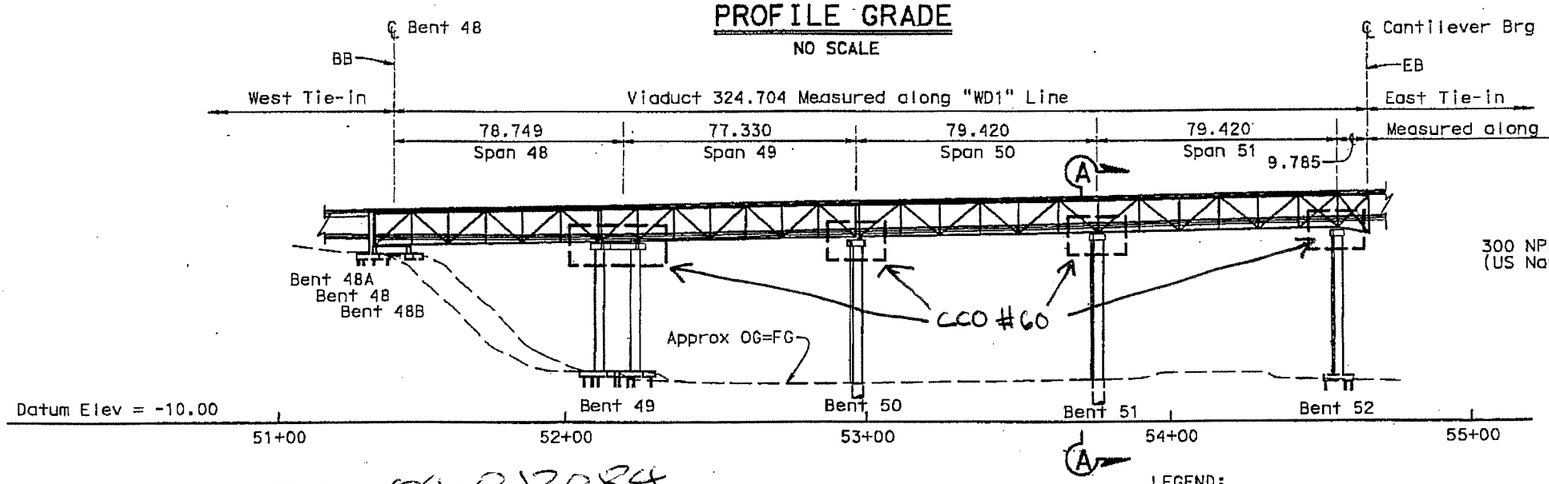

CONTRACT NO. 04-0120R4

CONTRACT CHANGE ORDER NO 60

ELEVATION

1:1000

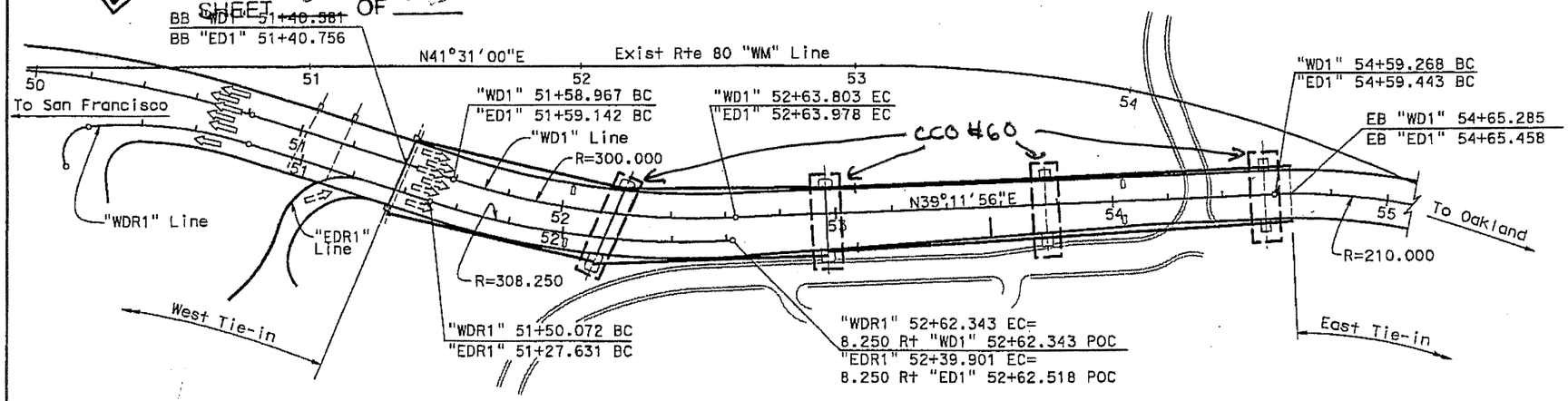

PLAN

1:1000

LEGEND:

⇦ Indicates Westbound Traffic (Top Deck)

⇨ Indicates Eastbound Traffic (Bottom Deck)

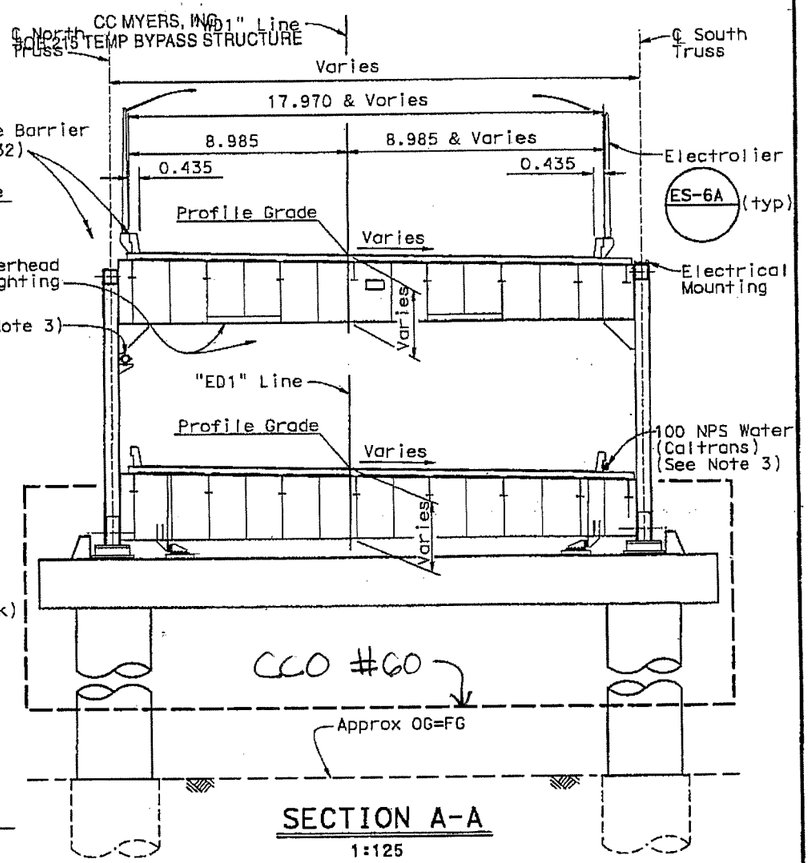

SECTION A-A

1:125

Notes:

1. All components are capacity protected except for the columns which are designed for ductile behavior.
2. For General Notes & Pile Data Table, see "Index to Plans" sheet.
3. For water line details see "Water Line Piping Details" by Pacific Mechanical Corporation.

ALL DIMENSIONS ARE IN METERS UNLESS OTHERWISE SHOWN

FINAL SUPERSTRUCTURE RESUBMITTAL
Print date: 09 OCT 2006 Time: 15:28:33

SAN FRANCISCO OAKLAND BAY BRIDGE EAST SPAN SEISMIC SAFETY PROJECT

VIADUCT

GENERAL PLAN

DESIGN OVERSIGHT	DESIGN	BY G.D./A.K.	CHECKED I.Y./K.N.	LOAD FACTOR DESIGN	LIVE LOADING: HS20-44 AND ALTERNATIVE AND PERMIT DESIGN LOAD		
	DETAILS	BY G. IMBSEN	CHECKED G.D./A.K./K.N.	LAYOUT	BY G. IMBSEN	CHECKED G.D./A.K.	
SIGN OFF DATE	QUANTITIES	BY C.C. MYERS	CHECKED C.C. MYERS	SPECIFICATIONS	BY E. TYK	PLANS AND SPECS COMPARED G.D./E.A.	

PREPARED FOR THE STATE OF CALIFORNIA DEPARTMENT OF TRANSPORTATION

ELI M. ARAMOUNI
PROJECT MANAGER

BRIDGE NO. 34-0006 (TEMP)
KP(PM) 12.6

CU 04-0120R4
EA 0120R4

DISREGARD PRINTS BEARING EARLIER REVISION DATES

REVISION DATES (PRELIMINARY STAGE ONLY) 03-28-06 10-09-06

SHEET 1 OF 112

DESIGN GENERAL PLAN SHEET (METRIC) (REV.3/1/99)
09 OCT 2006 5:28:33 h:\bay bridge\viaduct\a-gp_vi.dgn

ORIGINAL SCALE IN MILLIMETERS FOR REDUCED PLANS 0 10 20 30 40 50 60 70 80 90 100

FILE => $REQUEST

04 | SF | 80 | 12.6/13.2

Eli Aqi
REGISTERED CIVIL ENGINEER

REGISTERED PROFESSIONAL ENGINEER ELI M. ARAMOUNI No. CE 41712 Exp. 03-31-08 CIVIL STATE OF CALIFORNIA

PLANS APPROVAL DATE

The State of California or its officers or agents shall not be responsible for the accuracy or completeness of electronic copies of this plan sheet.

IMBSEN & ASSOCIATES INC.
9912 Business Park Dr., Suite 130
Sacramento, California 95827

215-9050
215-201
IC-3290

RECEIVED
215-9049
OCT 10 2006

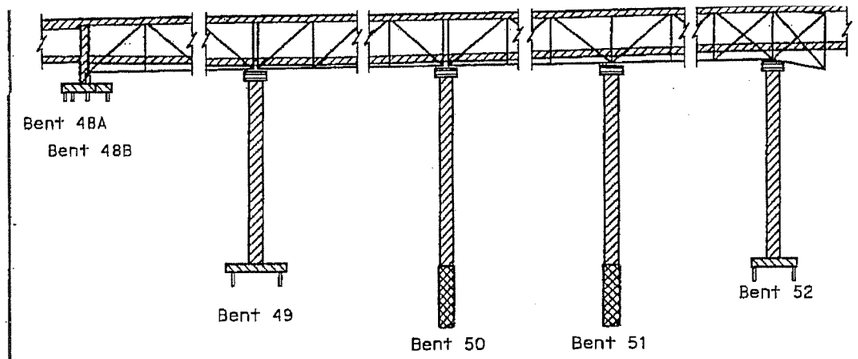

CONCRETE STRENGTH AND TYPE LIMITS

Indicates Structural Concrete, Bridge (f'c = 28 MPa at 28 days)

Indicates Structural Concrete, Bridge (f'c = 35 MPa at 28 days) (Bent Caps, Pedestals & Stopper Blocks)

CCO #60

Indicates Structural Concrete, Bridge Footing (f'c = 25 MPa at 28 days)

Cast-In-Drilled-Hole Concrete Piling (f'c = 28 MPa @ 28 days)

STANDARD PLANS DATED JULY, 1999 WITH ERRATUM NO. 99-1

A10A	ABBREVIATIONS
A10B	SYMBOLS
A62C	LIMITS OF PAYMENT FOR EXCAVATION AND BACKFILL - BRIDGE
B0-1	BRIDGE DETAILS
B0-5	BRIDGE DETAILS
B0-13	BRIDGE DETAILS
B6-21	JOINT SEALS
B7-1	BOX GIRDER DETAILS
B7-7	DECK DRAIN - TYPE D-3
RSP B11-55	CONCRETE BARRIER TYPE 732
B14-5	WATER SUPPLY LINE (DETAILS) (PIPE SIZES LESS THAN NPS 4)
RSP ES-6A	LIGHTING STANDARDS-TYPES 15,21 AND 22
RSP ES-6B	LIGHTING STANDARDS-TYPES 15 AND 20 BARRIER RAIL MOUNTED DETAILS
S1	OVERHEAD SIGNS-TRUSS INSTRUCTIONS AND EXAMPLES
S2	OVERHEAD SIGNS-TRUSS SINGLE POST TYPE POST POST TYPES II THROUGH VII
S4	OVERHEAD SIGNS-TRUSS SINGLE POST TYPE STRUCTURAL FRAME MEMBERS
S6	OVERHEAD SIGNS -TRUSS STRUCTURAL FRAME DETAILS
S7	OVERHEAD SIGNS- TRUSS FRAME JUNCTURE DETAILS
S8C	OVERHEAD SIGNS - TRUSS SIGN MOUNTING DETAILS LAMINATED PANEL - TYPE A
S9	OVERHEAD SIGNS WALKWAY DETAILS NO. 1
S10	OVERHEAD SIGNS WALKWAY DETAILS NO. 2
S11	OVERHEAD SIGNS WALKWAY SAFETY RAILING DETAILS

STANDARD PLAN SHEET NO.

DETAIL NO.

GENERAL NOTES LOAD FACTOR DESIGN

SEE "DESIGN CRITERIA NO. 1" THRU "DESIGN CRITERIA NO. 10" SHEETS OF THE CONTRACT PLANS

DESIGN BASED ON BDS 2000 AND AASHTO LRFD

REINFORCED CONCRETE:

fy = 420MPa

STRUCTURAL STEEL:

UNLESS OTHERWISE NOTED, ALL STEEL SHALL BE ASTM A709, GRADE 345 MPa

FASTENERS:

UNLESS OTHERWISE NOTED, ALL BOLTS ARE ASTM A490 HIGH STRENGTH SLIP-CRITICAL WITH THREADS EXCLUDED FROM SHEAR PLANES.

CCO #60

29 mm ø Bolt = 1⅛"ø Bolt
25 mm ø Bolt = 1" ø Bolt
22 mm ø Bolt = ⅞" ø Bolt
19 mm ø Bolt = ¾" ø Bolt

FOR WASHER REQUIREMENTS SEE ASTM F436

CONTACT SURFACES OF BOLTED SURFACES SHALL BE CLASS B COATING.

WELDING:
THE WELDING MUST BE ACCORDING TO ANSI/AWS D1.5.
THE SIZE OF THE FILLET WELDS ARE ACCORDING TO THE TABLE EXCEPT AS NOTED ON THE PLANS.

FILLET WELDS:

BASE METAL THICKNESS OF THICKER PART JOINTED (T)	MINIMUM SIZE OF FILLET WELD*	
T≤20 mm	6 mm	SINGLE-PASS WELDS MUST BE USED
T>20 mm	8 mm	

* THE WELD SIZE NEED NOT EXCEED THE THICKNESS OF THE THINNER PART JOINED

Design Load Specifications for Expansion Joints:

Live Load: AASHTO HS20-44, Load Factor Design

Bent 48: Thermal movement: 53± mm - Longitudinal
Seismic movement: 400± mm - Longitudinal
300± mm - Transverse

Bent 49 & 50: Thermal movement: 45± mm - Longitudinal
Seismic movement: 50± mm - Longitudinal
0 - Transverse

Span 52 (Cantilever):
Thermal movement: 66± mm - Longitudinal
Seismic movement: 550± mm - Longitudinal
0 - Transverse

PILE DATA TABLE

LOCATION	STATION "WD1" LINE	PILE TYPE	DESIGN LOADING (kN)	NOMINAL RESISTANCE (kN) COMPRESSION	NOMINAL RESISTANCE (kN) TENSION	BOTTOM OF FOOTING ELEVATION (m)	CUT OFF ELEVATION	DESIGN TIP ELEVATION (m)	SPECIFIED TIP ELEVATION WITHOUT SHELL FRICTION(m)
BENT 48	*	*	*	*	*	*	*	*	*
BENT 49 L	52+19.33	PP 610 x 12.7	1335	3115	755	5.0	N/A	-8.0(1),-8.0(2),-3.5(3)	N/A
BENT 49 R	52+19.33	PP 610 x 12.7	1335	3115	455	5.0	N/A	-5.0(1),-5.0(2),-3.5(3)	N/A
BENT 50 L	52+96.66	3660 mm CIDH	N/A	51000	0	N/A	2.73	-23.7(1),-21.0(3)	-23.7
BENT 50 R	52+96.66	3660 mm CIDH	N/A	51000	0	N/A	2.78	-25.7(1),-23.0(3)	-25.7
BENT 51 L	53+76.08	3660 mm CIDH	N/A	61500	0	N/A	6.76	-24.1(1),-19.5(3)	-24.1
BENT 51 R	53+76.08	3660 mm CIDH	N/A	61500	0	N/A	3.39	-27.1(1),-22.5(3)	-27.1
BENT 52 L	54+55.50	PP 610 x 12.7	1335	2670	667	2.5	N/A	-8.0(1),-8.0(2),-6.6(3)	N/A
BENT 52 R	54+55.50	PP 610 x 12.7	1335	2670	1335	3.0	N/A	-13.5(1),-13.5(2),-6.6(3)	N/A

* For Bent 48 information see West Tie-In Segment
Design Tip Elevation is controlled by the following demands (1) Compression, (2) Tension, (3) Lateral.

INDEX TO PLANS

SHEET NO.	TITLE
1.	General Plan
2.	Index to Plans
3.	Structure Plan No. 1
4.	Structure Plan No. 2
5.	Deck Contours-Westbound
6.	Deck Contours-Eastbound
7.	Deck Pouring Sequence
8.	Foundation Plan
9.	Bent 49 Layout
10.	Bent 50 Layout
11.	Column Details No. 1
11A.	Bents 49 & 50 Removal Details
12.	Intentionally Left Blank
13.	Bent 51 Layout
14.	Bent 52 Layout
	BENT CAP DETAILS
14A.	Bent Cap Details No. 1
14B.	Bent Cap Details No. 2
14C.	Bent Cap Details No. 3
14D.	Bent Cap Details No. 4
14E.	Bent Cap Details No. 5
14F.	Bent Cap Details No. 6
14G.	Concrete Pedestal Details
14H.	Stopper Block Details No. 1
14J.	Stopper Block Details No. 2
15.	Footing Details No. 1
16.	Footing Details No. 2
17.	Footing Details No. 2A
18.	Pile Shaft Details
19.	Tiedown Anchor Details
20.	Framing Plan No. 1
21.	Framing Plan No. 2
22.	Typical Section
23.	Floor Beam Details No. 1
24.	Floor Beam Details No. 2
25.	Floor Beam Details No. 3
26.	Floor Beam Details No. 4
27.	Floor Beam Details No. 5
28.	Floor Beam Details No. 6
29.	Floor Beam Details No. 7
30.	Floor Beam Details No. 8
31.	Floor Beam Details No. 9
32.	Stringer Connection Details No. 1
33.	Stringer Connection Details No. 2
34.	Stringer Connection Details No. 3
35.	Stringer Connection Details No. 4
36.	Stringer Connection Details No. 5
37.	Stringer Connection Details No. 6
38.	Stringer Connection Details No. 7
39.	Stringer Connection Details No. 8
40.	Stringer Camber - Span 48 Top Deck
41.	Stringer Camber - Span 48 Bottom Deck
42.	Stringer Camber - Span 49 Top Deck
43.	Stringer Camber - Span 49 Bottom Deck
44.	Stringer Camber - Span 50 Top Deck
45.	Stringer Camber - Span 50 Bottom Deck
46.	Stringer Camber - Span 51 Top Deck
47.	Stringer Camber - Span 51 Bottom Deck
48.	Bottom Lateral Bracing Layout
49.	Bottom Lateral Details No. 1
50.	Bottom Lateral Details No. 2
51.	Bottom Lateral Details No. 3
52.	Bottom Lateral Details No. 4
53.	Top Lateral Bracing Layout
54.	Top Lateral Details No. 1
55.	Top Lateral Details No. 2
55A.	Top Lateral Details No. 3
56.	Hanger Rod & Erection Bracing Details
57.	Truss Layout - Span 48
58.	Truss Layout - Span 49
59.	Truss Layout - Spans 50 & 51
60.	Truss Joint Details No. 1
61.	Truss Joint Details No. 2
62.	Truss Joint Details No. 2A
63.	Truss Joint Details No. 3
64.	Truss Joint Details No. 3A
65.	Truss Joint Details No. 4
66.	Truss Joint Details No. 5
67.	Truss Joint Details No. 5A
68.	Truss Joint Details No. 5B
69.	Truss Joint Details No. 6
70.	Truss Joint Details No. 7
71.	Truss Joint Details No. 8
72.	Truss Joint Details No. 9
73.	Truss Joint Details No. 10
74.	Truss Joint Details No. 11
75.	Truss Joint Details No. 12
76.	Truss Joint Details No. 13
77.	Truss Joint Details No. 14
78.	Truss Joint Details No. 15
79.	Truss Joint Details No. 16
80.	Truss Joint Details No. 17
81.	Truss Joint Details No. 17A
82.	Truss Joint Details No. 18
83.	Truss Joint Details No. 19
84.	Truss Joint Details No. 20
85.	Truss Joint Details No. 21
86.	Portal Strut Details
87.	Man Hole & Hand Hole Details
88.	Bent 48 Expansion Joint Layout No. 1
89.	Bent 48 Expansion Joint Layout No. 2
90.	Bent 48 Expansion Joint Details No. 1
91.	Bent 48 Expansion Joint Details No. 2
92.	Bent 48 Expansion Joint Details No. 3
93.	Span 52 Expansion Joint Layout No. 1
94.	Span 52 Expansion Joint Layout No. 2
95.	Span 52 Expansion Joint Details
96.	Joint Seal Details
97.	Miscellaneous Deck Details
98.	Bearing Details No. 1
99.	Bearing Details No. 2
100.	Bearing Details No. 3
101.	Bearing Details No. 4
102.	Bearing Details No. 5
103.	Restrainer Details No. 1
104.	Restrainer Details No. 2
105.	Deck Drainage Layout - Westbound
106.	Deck Drainage Layout - Eastbound
107.	Deck Drain Details
108.	Utility Connection Details
109.	Overhead Sign Details
110.	Steel Girder Details
111.	Steel Girder Shop Splice Details
112.	Transverse Stiffener and Stud Connector Details

Caltrans Metric

04	SF	80	12.6/13.2		

ELI M. ARAMOUNI
REGISTERED CIVIL ENGINEER

PLANS APPROVAL DATE

REGISTERED PROFESSIONAL ENGINEER — ELI M. ARAMOUNI — No. CE 41712 — Exp. 03-31-08 — CIVIL — STATE OF CALIFORNIA

The State of California or its officers or agents shall not be responsible for the accuracy or completeness of electronic copies of this plan sheet.

IMBSEN & ASSOCIATES INC.
9912 Business Park Dr., Suite 130
Sacramento, California 95827

CONTRACT NO. 04-0120R4

CONTRACT CHANGE ORDER NO 60

Sheet 9 of 25

FINAL SUPERSTRUCTURE RESUBMITTAL
Print date: 09 OCT 2006 Time: 15:52:04

ALL DIMENSIONS ARE IN METERS UNLESS OTHERWISE SHOWN

SAN FRANCISCO OAKLAND BAY BRIDGE
EAST SPAN SEISMIC SAFETY PROJECT

VIADUCT

INDEX TO PLANS

DESIGN OVERSIGHT			
SIGN OFF DATE			
DESIGN	BY G.D./G.W./A.K.	CHECKED I.Y./K.L./K.N.	
DETAILS	BY G. IMBSEN	CHECKED G.D./A.K./K.N.	
QUANTITIES	BY C.C. MYERS	CHECKED C.C. MYERS	

PREPARED FOR THE STATE OF CALIFORNIA DEPARTMENT OF TRANSPORTATION

ELI M. ARAMOUNI
PROJECT MANAGER

BRIDGE NO. 34-0006 (TEMP)
KILOMETER POST 12.6

CU 0120
EA 0120R4

DISREGARD PRINTS BEARING EARLIER REVISION DATES

REVISION DATES (PRELIMINARY STAGE ONLY): 07-24-06, 10-09-06

SHEET 2 OF 112

DESIGN DETAIL SHEET (METRIC) (REV. 3/1/98)
09 OCT 2006 15:52:04 h:\bay bridge\viaduct\o-itp_vi.dgn

ORIGINAL SCALE IN MILLIMETERS FOR REDUCED PLANS 0 10 20 30 40 50 60 70 80 90 100

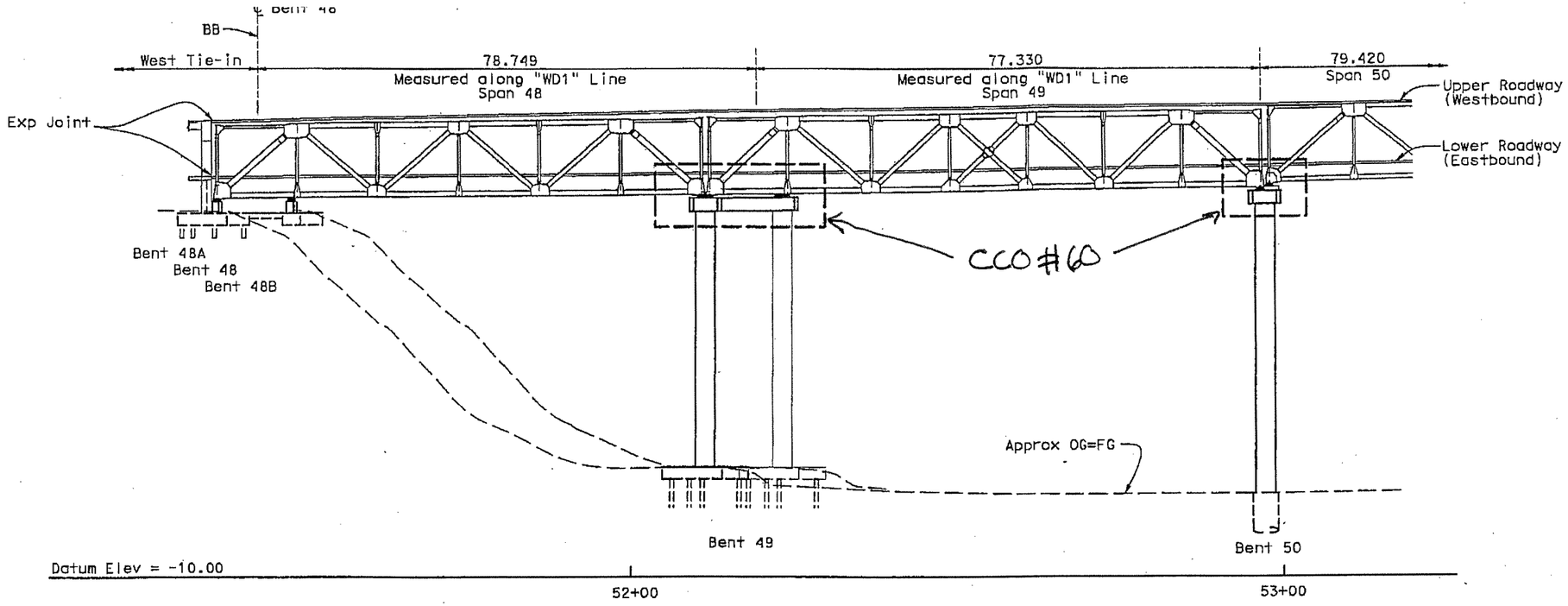

ELEVATION
1:400

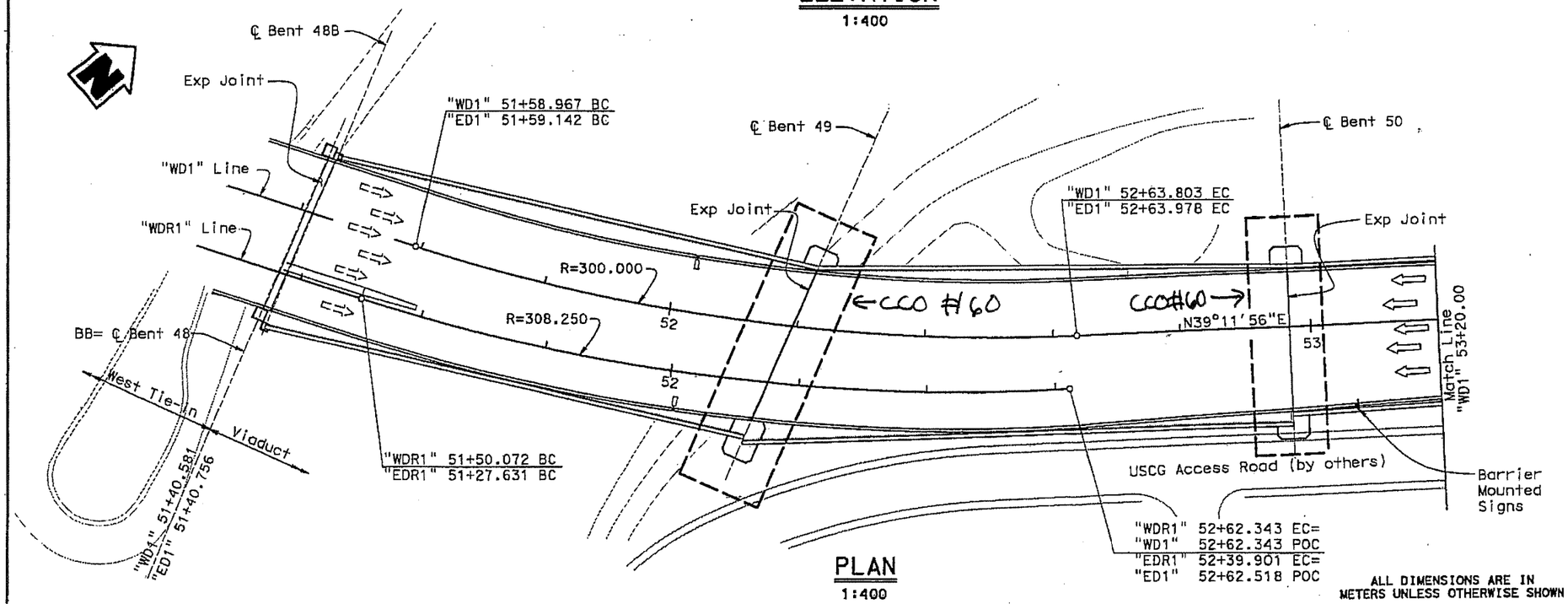

PLAN
1:400

ALL DIMENSIONS ARE IN METERS UNLESS OTHERWISE SHOWN

"WD1" Line	"ED1" Line
R = 300.000	R = 300.000
Δ = 20°01'20"	Δ = 20°01'20"
T = 52.958	T = 52.958
L = 104.836	L = 104.836

"WDR1" Line	"EDR1" Line
R = 308.250	R = 308.250
Δ = 20°52'06"	Δ = 20°52'06"
T = 56.764	T = 56.764
L = 112.271	L = 112.271

LEGEND:

⇦ Indicates Westbound Traffic (Top Deck)

⊏⇨ Indicates Eastbound Traffic (Bottom Deck)

▷ Indicates Call Box, see Electrical Plans

Caltrans Metric

04	SF	80	12.6/13.2		

Eli Aramouni
REGISTERED CIVIL ENGINEER

REGISTERED PROFESSIONAL ENGINEER — ELI M. ARAMOUNI — No. CE 41712 — Exp. 03-31-08 — CIVIL — STATE OF CALIFORNIA

PLANS APPROVAL DATE

The State of California or its officers or agents shall not be responsible for the accuracy or completeness of electronic copies of this plan sheet.

IMBSEN & ASSOCIATES INC.
9912 Business Park Dr., Suite 130
Sacramento, California 95827

CONTRACT NO. 04-0120R4

CONTRACT CHANGE ORDER NO 60

SHEET 10 OF 25

FINAL SUPERSTRUCTURE RESUBMITTAL
Print date: 09 OCT 2006 Time: 13:20:43

SAN FRANCISCO OAKLAND BAY BRIDGE
EAST SPAN SEISMIC SAFETY PROJECT

VIADUCT

STRUCTURE PLAN NO. 1

DESIGN	BY G.D./G.W./A.K.	CHECKED I.Y./K.L./K.N.	PREPARED FOR THE STATE OF CALIFORNIA DEPARTMENT OF TRANSPORTATION
DETAILS	BY G. IMBSEN	CHECKED G.D./A.K./K.N.	
QUANTITIES	BY C.C. MYERS	CHECKED C.C. MYERS	

ELI M. ARAMOUNI
PROJECT MANAGER

BRIDGE NO. 34-0006 (TEMP)
KILOMETER POST 12.6

DESIGN OVERSIGHT

SIGN OFF DATE

DESIGN DETAIL SHEET (METRIC) (REV. 3/1/98)
09 OCT 2006 3:20:43 h:\boy bridge\viaduct\b-ap01_vi.dgn

ORIGINAL SCALE IN MILLIMETERS FOR REDUCED PLANS 0 10 20 30 40 50 60 70 80 90 100

CU
EA 0120R4

DISREGARD PRINTS BEARING EARLIER REVISION DATES

REVISION DATES (PRELIMINARY STAGE ONLY): 07-26-06 | 10-03-06

SHEET 3 OF 112

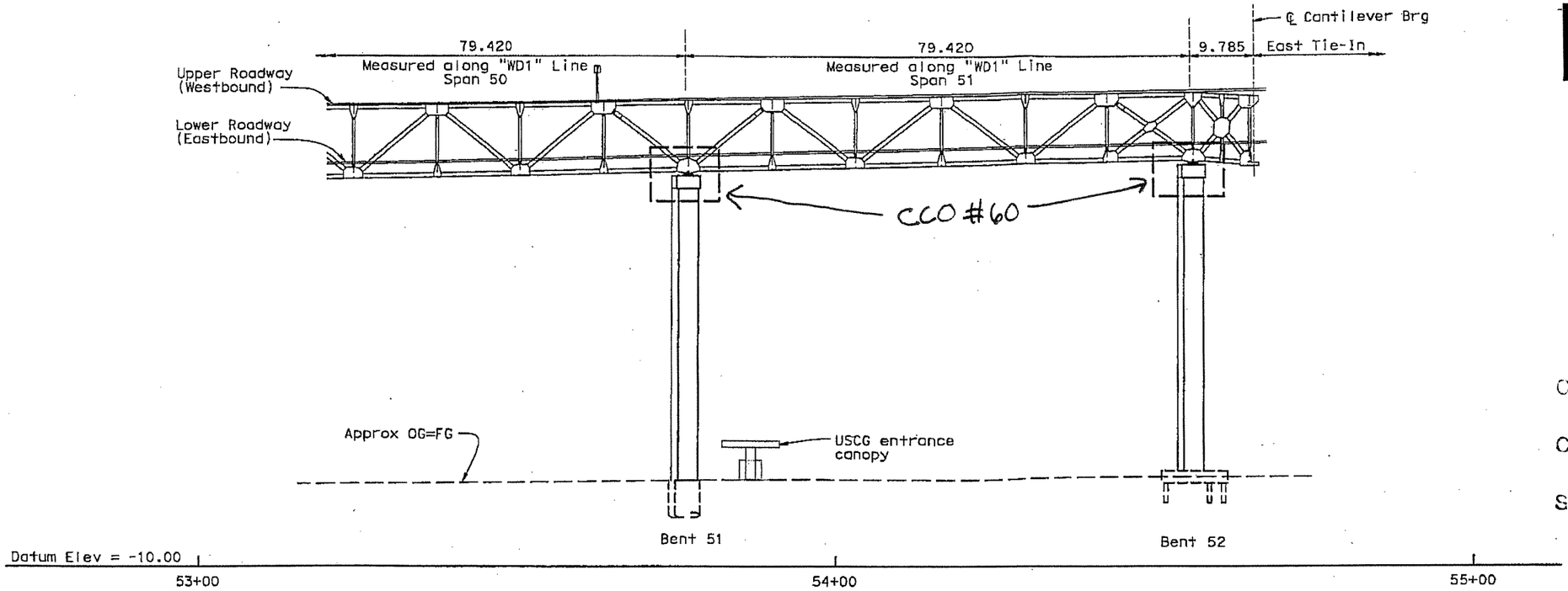

ELEVATION
1:400

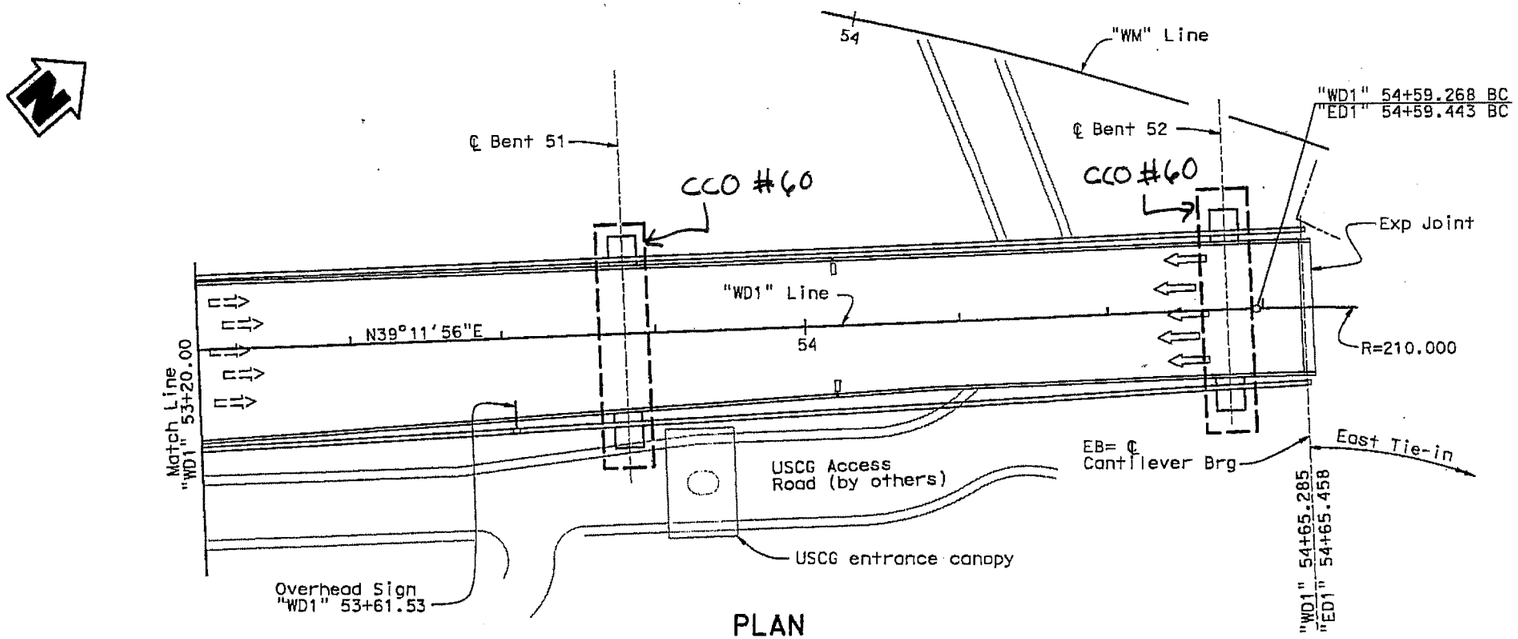

PLAN
1:400

"WD1" Line

R = 210.000
Δ = 30°19'52.27"
T = 56.920
L = 111.170

"ED1" Line

R = 210.000
Δ = 30°19'52.27"
T = 56.920
L = 111.170

Note:

1. For Overhead Sign, see "Overhead Sign Details" sheet.

LEGEND:

⇦ Indicates Westbound Traffic (Top Deck)

⊏⇨ Indicates Eastbound Traffic (Bottom Deck)

▫ Indicates Call Box, see Electrical Plans

ALL DIMENSIONS ARE IN METERS UNLESS OTHERWISE SHOWN

Caltrans Metric

04	SF	80	12.6/13.2		

Eli Arai
REGISTERED CIVIL ENGINEER

REGISTERED PROFESSIONAL ENGINEER — ELI W. ARAMOUNI — No. CE 41712 — Exp. 03-31-08 — CIVIL — STATE OF CALIFORNIA

PLANS APPROVAL DATE

The State of California or its officers or agents shall not be responsible for the accuracy or completeness of electronic copies of this plan sheet.

IMBSEN & ASSOCIATES INC.
9912 Business Park Dr., Suite 130
Sacramento, California 95827

CONTRACT NO. 04-012024

CONTRACT CHANGE ORDER NO 60

SHEET 11 OF 25

FINAL SUPERSTRUCTURE RESUBMITTAL
Print date: 09 OCT 2006 Time: 13:21:05

SAN FRANCISCO OAKLAND BAY BRIDGE
EAST SPAN SEISMIC SAFETY PROJECT

VIADUCT

STRUCTURE PLAN NO. 2

DESIGN	BY G.D./G.W./A.K.	CHECKED I.Y./K.L./K.N.	PREPARED FOR THE STATE OF CALIFORNIA DEPARTMENT OF TRANSPORTATION
DETAILS	BY G. IMBSEN	CHECKED G.D./A.K./K.N.	
QUANTITIES	BY C.C. MYERS	CHECKED C.C. MYERS	

DESIGN OVERSIGHT

SIGN OFF DATE

ELI M. ARAMOUNI
PROJECT MANAGER

BRIDGE NO. 34-0006 (TEMP)
KILOMETER POST 12.6

CU EA 012DR4

DISREGARD PRINTS BEARING EARLIER REVISION DATES

REVISION DATES (PRELIMINARY STAGE ONLY): 01-26-06 10-09-06

SHEET 4 OF 112

DESIGN DETAIL SHEET (METRIC) (REV. 3/1/98)
09 OCT 2006 3:21:05 h:\bay bridge\viaduct\b-ap02_vl.dgn

ORIGINAL SCALE IN MILLIMETERS FOR REDUCED PLANS 0 10 20 30 40 50 60 70 80 90 100

(FILE => apREQUEST)

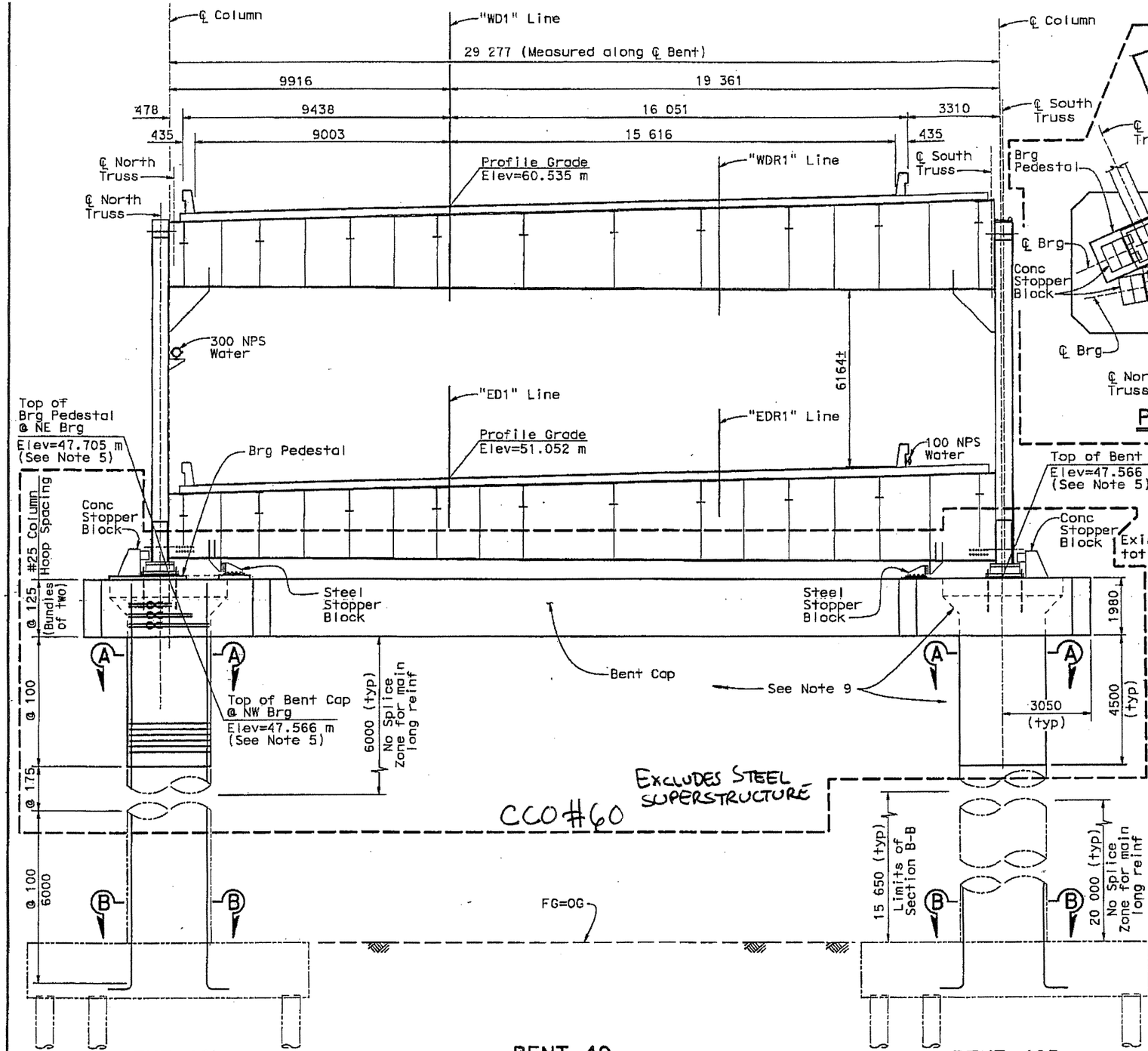

CONTRACT NO. 04-0120R4

STA: "WD1" 52+19.33

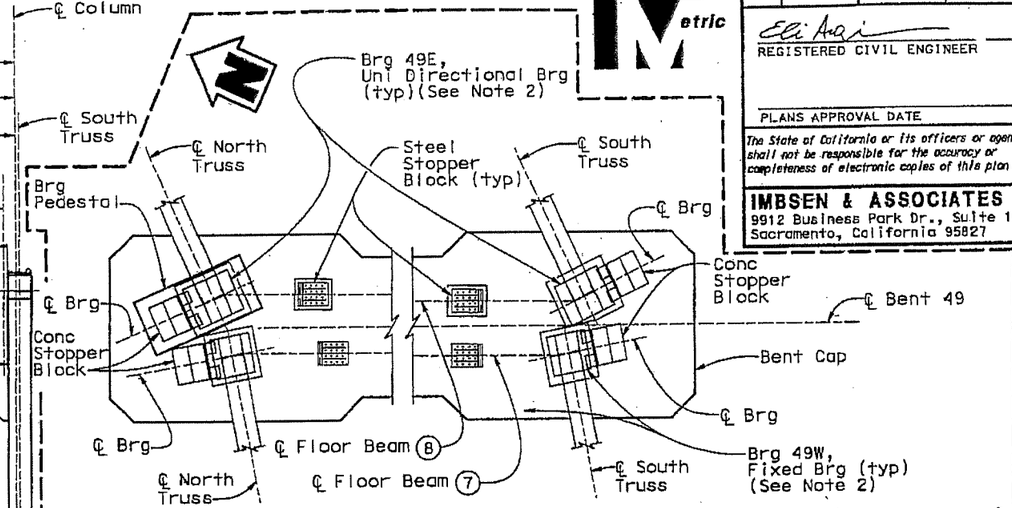

PLAN AT TOP OF BENT CAP

1:80

CCO#60

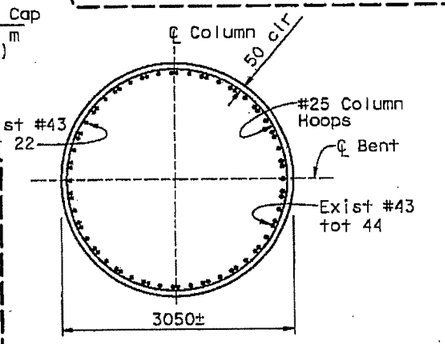

SECTION A-A

1:40

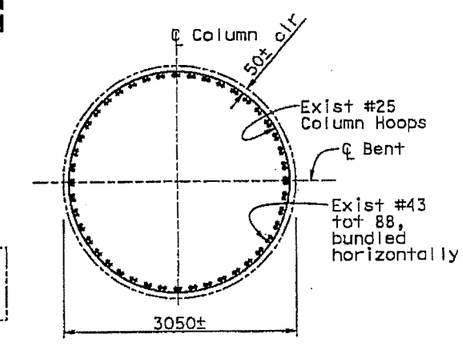

SECTION B-B

1:40

LEGEND:

- Indicates Existing Column
- Indicates Bundled Bars

Notes:

1. For footing information, see "Footing Details No. 1" sheet.
2. For bearing details and anchor rods, see "Bearing Detail" sheets.
3. Splices in main column reinforcement shall be ultimate butt splices.
4. Hoops shall be made continuous with ultimate butt splices.
5. Top of Bent Cap and Brg Pedetal elevations are based on a 50 mm mortar pad and bearing heights shown on "Bearing Detail" sheets.
6. Deck drainage system not shown pending deck drainage resolution.
7. For Bent Cap details, see "Bent Cap Details" sheets.
8. For Stopper Block details, see "Stopper Block Details" sheets.
9. For removal portion of existing Columns, see "Bents 49 & 50 Removal Details" sheet.

04	SF	80	12.6/13.2

REGISTERED CIVIL ENGINEER

PLANS APPROVAL DATE

The State of California or its officers or agents shall not be responsible for the accuracy or completeness of electronic copies of this plan sheet.

REGISTERED PROFESSIONAL ENGINEER ELI M. ARAMOUNI No. CE 41712 Exp. 03-31-08 CIVIL STATE OF CALIFORNIA

IMBSEN & ASSOCIATES INC.
9912 Business Park Dr., Suite 130
Sacramento, California 95827

FINAL SUPERSTRUCTURE RESUBMITTAL
Print date: 09 OCT 2006 Time: 15:32:08

ALL DIMENSIONS ARE IN MILLIMETERS UNLESS OTHERWISE SHOWN

SAN FRANCISCO OAKLAND BAY BRIDGE
EAST SPAN SEISMIC SAFETY PROJECT

VIADUCT

BENT 49 LAYOUT

CONTRACT CHANGE ORDER NO 60

DESIGN OVERSIGHT

SIGN OFF DATE

SHEET 12 OF 35

	BY	CHECKED
DESIGN	L.S./J.E.	J.A./M.P.
DETAILS	G. IMBSEN	L.S./A.K./K.N.
QUANTITIES	C.C. MYERS	C.C. MYERS

PREPARED FOR THE STATE OF CALIFORNIA DEPARTMENT OF TRANSPORTATION

ELI M. ARAMOUNI
PROJECT MANAGER

BRIDGE NO. 34-0006 (TEMP)
KILOMETER POST 12.6

DESIGN DETAIL SHEET (METRIC) (Rev. 9/1/98)
09 OCT 2006 5:32:08 h:\bay bridge\viaduct\steelbent49_v1.dgn

ORIGINAL SCALE IN MILLIMETERS FOR REDUCED PLANS 0 10 20 30 40 50 60 70 80 90 100

CU
EA 0120R4

DISREGARD PRINTS BEARING EARLIER REVISION DATES

REVISION DATES (PRELIMINARY STAGE ONLY) 07-28-06 10-09-06

SHEET 9 OF 112

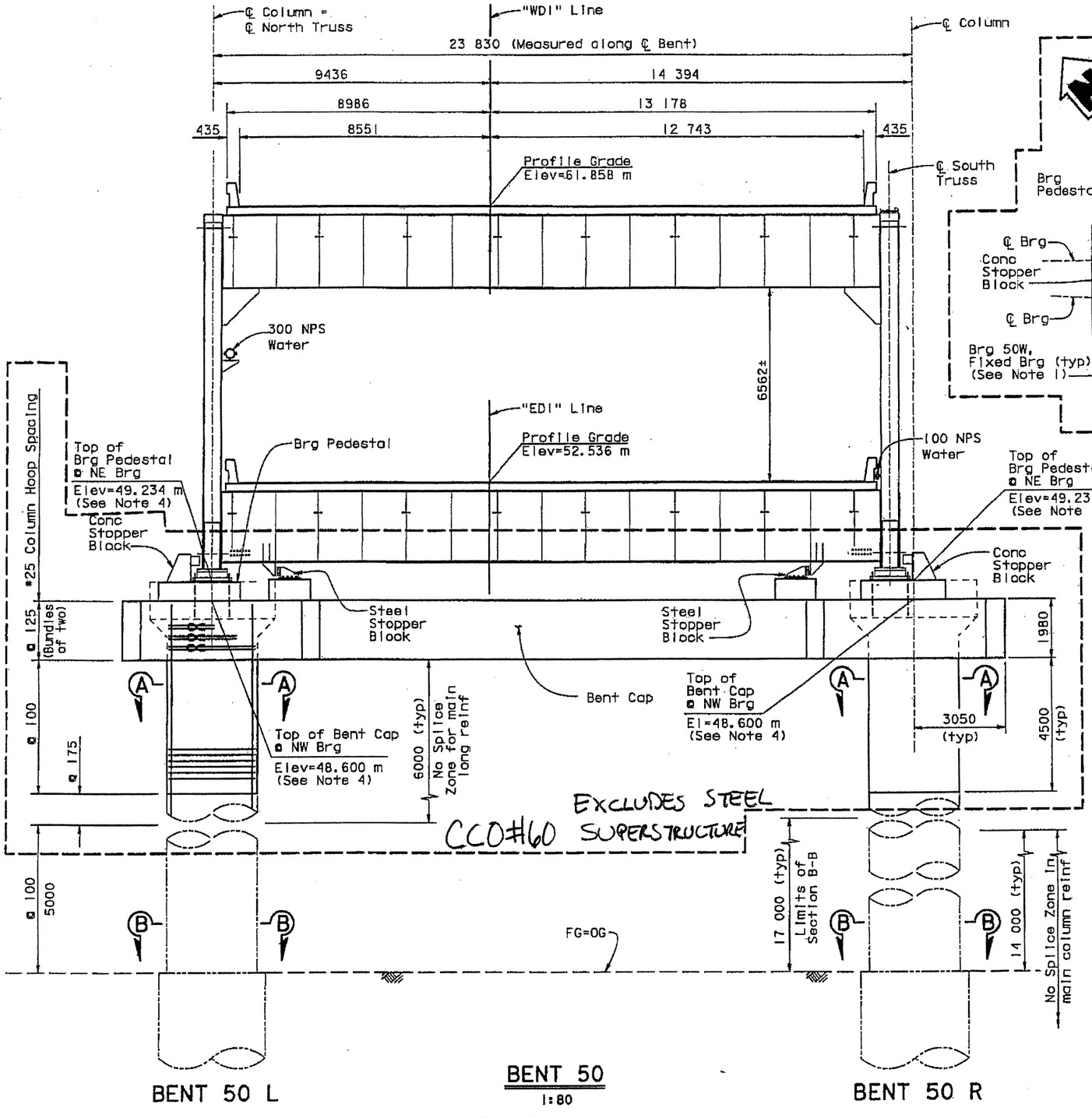

BENT 50 L

BENT 50
1:80

BENT 50 R

STA: "WDI" 52+96.660

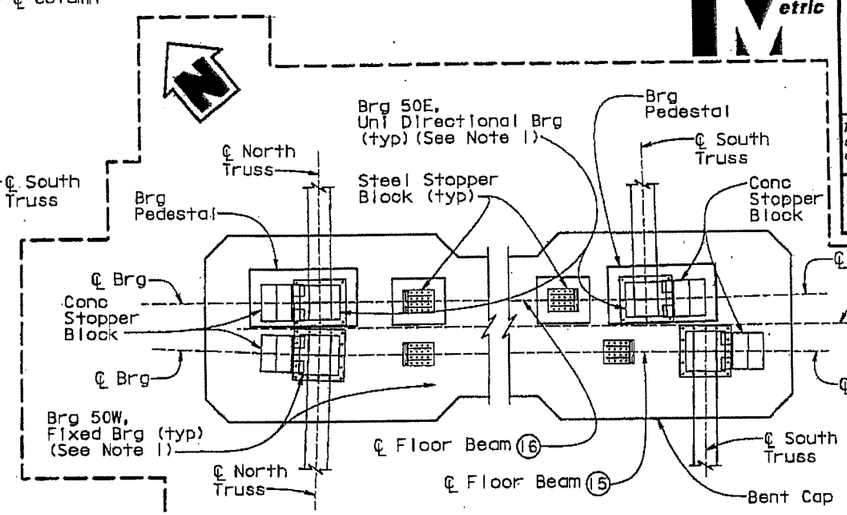

PLAN AT TOP OF BENT CAP
1:80

CCO#60

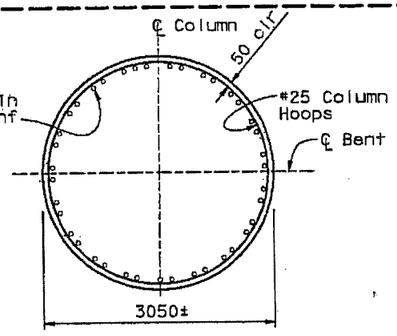

SECTION A-A
1:40

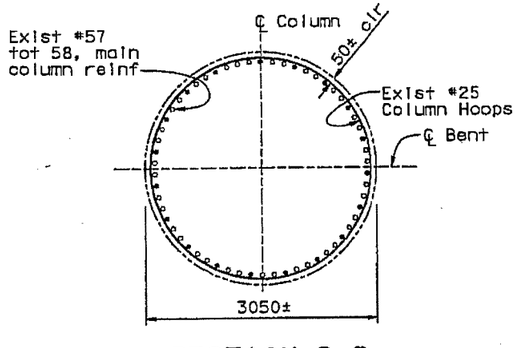

SECTION B-B
1:40

ALL DIMENSIONS ARE IN MILLIMETERS UNLESS OTHERWISE SHOWN

LEGEND:

——— Indicates Existing Column

-oc- Indicates Bundled Bars

Notes:

1. For bearing details and anchor rods, see "Bearing Detail" sheets.
2. Splices in main column reinforcement shall be ultimate butt splices.
3. Hoops shall be made continuous with ultimate butt splices.
4. Top of Bent Cap and Brg Pedestal elevations are based on a 50 mm mortar pad and bearing heights shown on "Bearing Detail" sheets.
5. Deck drainage system not shown pending deck drainage resolution.
6. For Bent Cap details, see "Bent Cap Details" sheets.
7. For Stopper Block details, see "Stopper Block Details" sheets.
8. For removal portion of existing Columns, see "Bents 49 & 50 Removal Details" sheet.

FINAL SUPERSTRUCTURE RESUBMITTAL
Print date: 09 OCT 2006 Time: 14:10:22

04	SF	80	12.6/13.2		

Caltrans Metric

ELI ARAMOUNI
REGISTERED CIVIL ENGINEER

PLANS APPROVAL DATE

REGISTERED PROFESSIONAL ENGINEER — ELI M. ARAMOUNI — No. CE 41712 — Exp. 03-31-08 — CIVIL — STATE OF CALIFORNIA

The State of California or its officers or agents shall not be responsible for the accuracy or completeness of electronic copies of this plan sheet.

IMBSEN & ASSOCIATES INC.
9912 Business Park Dr., Suite 130
Sacramento, California 95827

CONTRACT NO. 64-0120R4 CONTRACT CHANGE ORDER NO 60

SHEET 13 OF 25

SAN FRANCISCO OAKLAND BAY BRIDGE
EAST SPAN SEISMIC SAFETY PROJECT

VIADUCT

BENT 50 LAYOUT

DESIGN	BY L.S./J.E.	CHECKED J.A./M.P.	PREPARED FOR THE STATE OF CALIFORNIA DEPARTMENT OF TRANSPORTATION
DETAILS	BY G. IMBSEN	CHECKED L.S./A.K./K.N.	
QUANTITIES	BY C.C. MYERS	CHECKED C.C. MYERS	

ELI M. ARAMOUNI
PROJECT MANAGER

BRIDGE NO. 34-0006 (TEMP)
KILOMETER POST 12.6

CU EA 0120R4

DESIGN OVERSIGHT

SIGN OFF DATE

DISREGARD PRINTS BEARING EARLIER REVISION DATES

REVISION DATES (PRELIMINARY STAGE ONLY): 01-26-06 | 10-01-06

SHEET 10 OF 112

ORIGINAL SCALE IN MILLIMETERS FOR REDUCED PLANS 0 10 20 30 40 50 60 70 80 90 100

DESIGN DETAIL SHEET (METRIC) (REV. 3/1/88)
09 OCT 2006 11:10:22 h:\bay bridge\viaduct\steelbent50_v1.dgn

LEILE = REQUEST

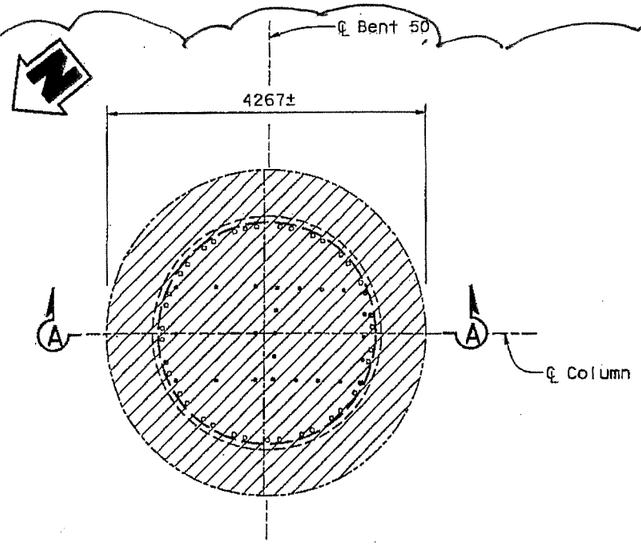

Bent 50L shown, Bent 50R similar

BENT 50 PLAN

1:40

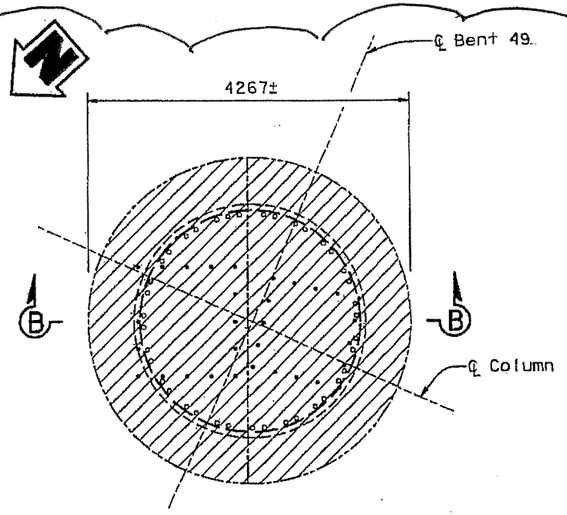

Bent 49L

BENT 49L PLAN

1:40

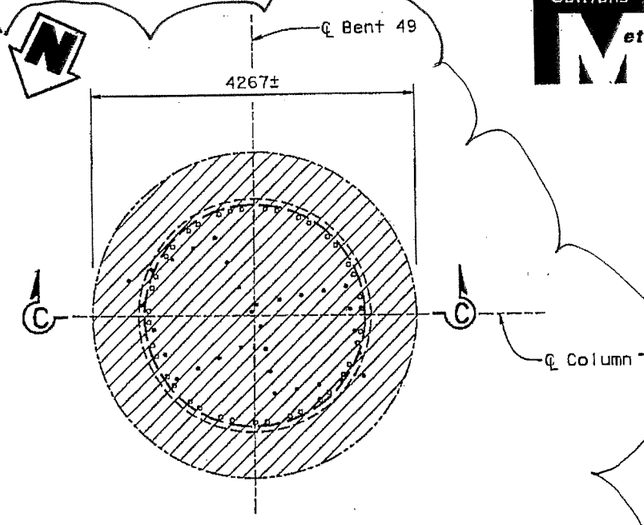

Bent 49R

BENT 49R PLAN

1:40

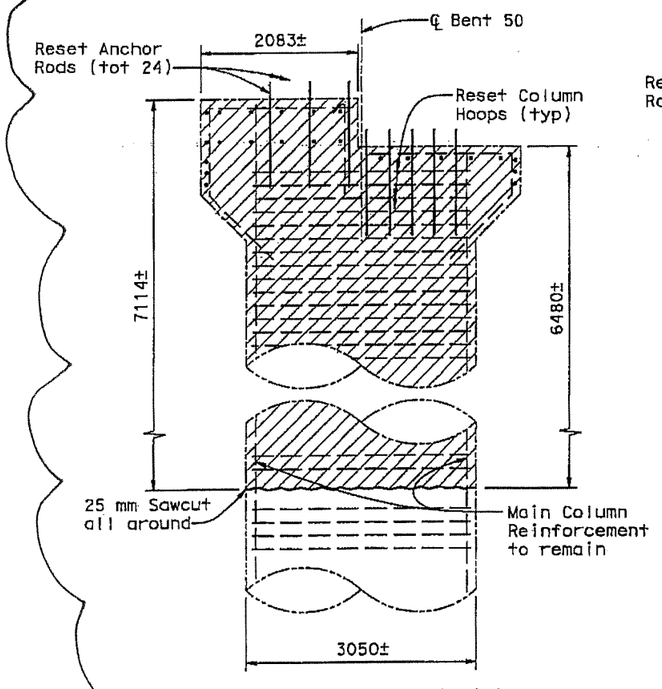

Bent 50L shown, Bent 50R similar

SECTION A-A

1:40

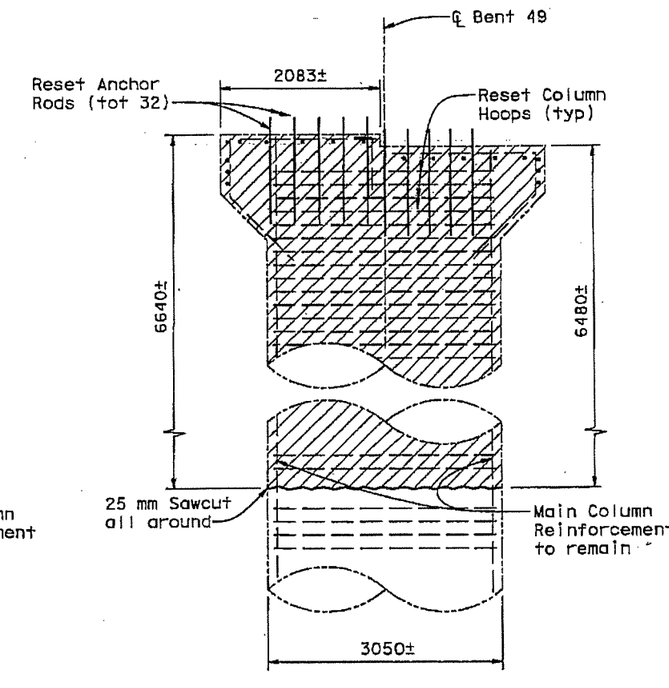

Bent 49L

SECTION B-B

1:40

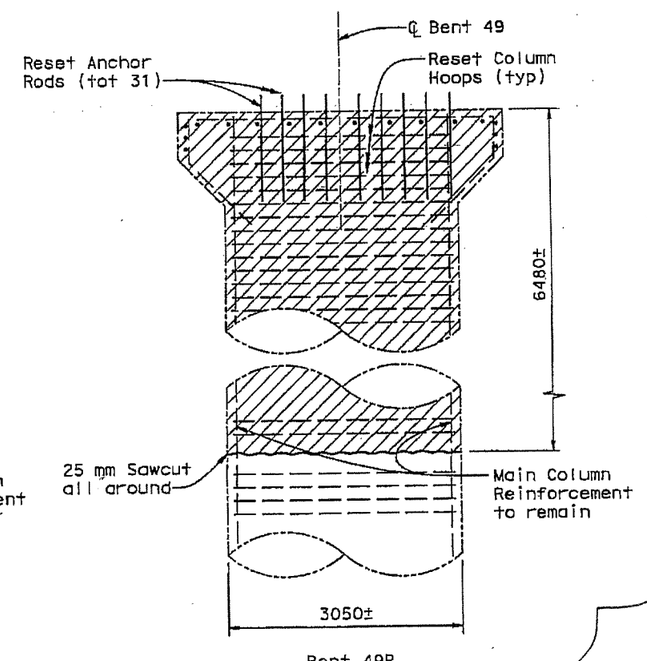

Bent 49R

SECTION C-C

1:40

ALL DIMENSIONS ARE IN MILLIMETERS UNLESS OTHERWISE SHOWN

Caltrans Metric

04	SF	80	12.6/13.2		

Eli Aqi
REGISTERED CIVIL ENGINEER

PLANS APPROVAL DATE

REGISTERED PROFESSIONAL ENGINEER — ELI W. ARAMOUNI — No. CE 41712 — Exp. 03-31-08 — CIVIL — STATE OF CALIFORNIA

The State of California or its officers or agents shall not be responsible for the accuracy or completeness of electronic copies of this plan sheet.

IMBSEN & ASSOCIATES INC.
9912 Business Park Dr., Suite 130
Sacramento, California 95827

CCO#60

CONTRACT NO. 04-0120R4

CONTRACT CHANGE ORDER NO 60

SHEET 14 OF 25

LEGEND:

——— Indicates Existing Structure

▨ Indicates Bridge Removal (Portion)

FINAL SUPERSTRUCTURE RESUBMITTAL
Print date: 09 OCT 2006 Time: 13:24:29

SAN FRANCISCO OAKLAND BAY BRIDGE
EAST SPAN SEISMIC SAFETY PROJECT

VIADUCT

BENTS 49 & 50 REMOVAL DETAILS

DESIGN	BY G.D./A.K.	CHECKED D.S./K.N.	
DETAILS	BY A. CARDOZA	CHECKED G.D./A.K./K.N.	
QUANTITIES	BY C.C. MYERS	CHECKED C.C. MYERS	

PREPARED FOR THE STATE OF CALIFORNIA
DEPARTMENT OF TRANSPORTATION

ELI M. ARAMOUNI
PROJECT MANAGER

BRIDGE NO. 34-0006 (TEMP)
KILOMETER POST 12.6

CU 04
EA 0120R4

DESIGN OVERSIGHT

SIGN OFF DATE

DESIGN DETAIL SHEET (METRIC) (REV. 3/1/88)
09 OCT 2006 3:24:29 h:\boy bridge\viaduct\steelbent50c_v1.dgn

ORIGINAL SCALE IN MILLIMETERS FOR REDUCED PLANS 0 10 20 30 40 50 60 70 80 90 100

DISREGARD PRINTS BEARING EARLIER REVISION DATES

REVISION DATES (PRELIMINARY STAGE ONLY) 09-27-06 10-09-06

SHEET 11A OF 112

Eli Arami
REGISTERED CIVIL ENGINEER
PLANS APPROVAL DATE
ELI M. ARAMOUNI No. CE 41712 Exp. 03-31-08 CIVIL — REGISTERED PROFESSIONAL ENGINEER — STATE OF CALIFORNIA

The State of California or its officers or agents shall not be responsible for the accuracy or completeness of electronic copies of this plan sheet.

IMBSEN & ASSOCIATES INC.
9912 Business Park Dr., Suite 130
Sacramento, California 95827

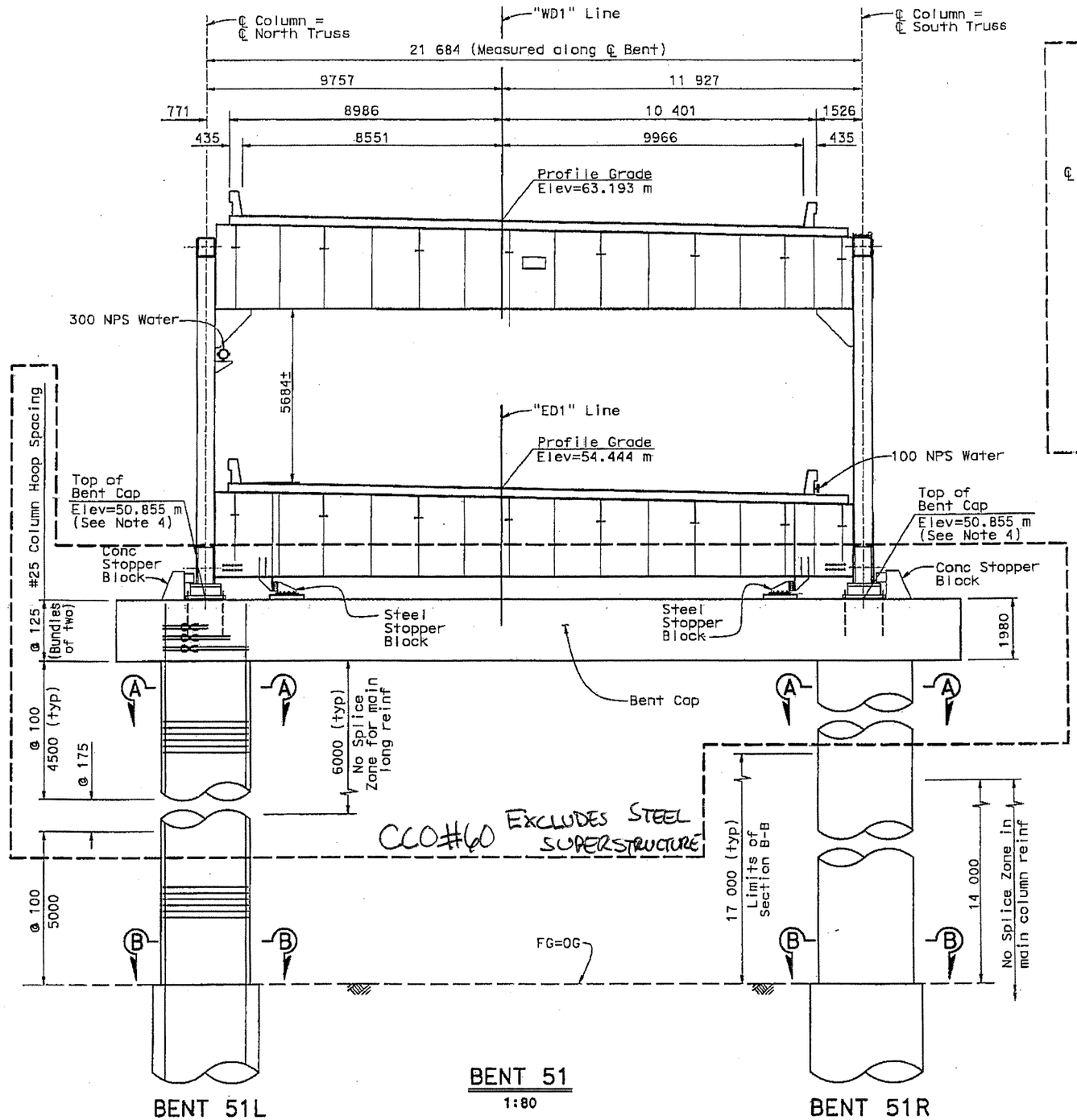

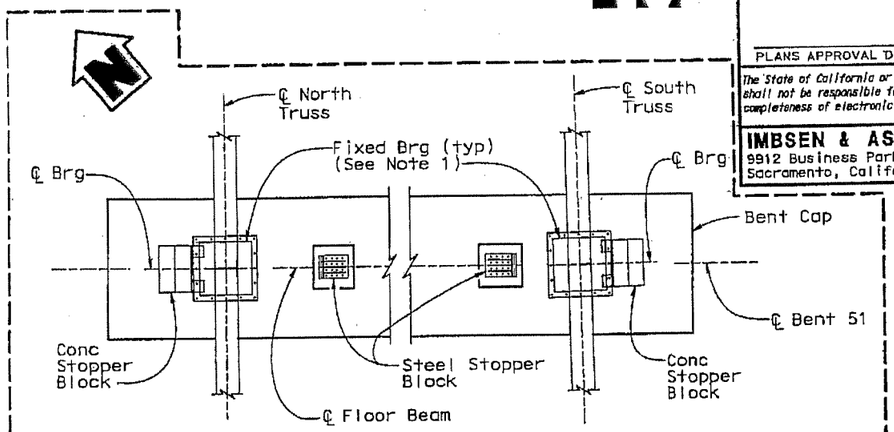

PLAN AT TOP OF BENT CAP CCO#60

1:80

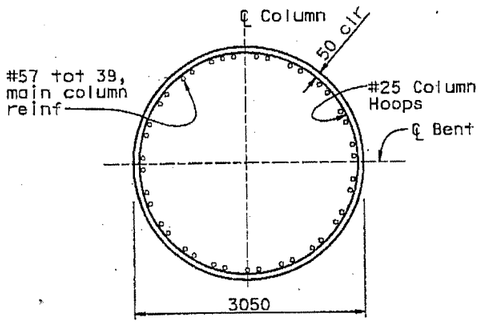

SECTION A-A

1:40

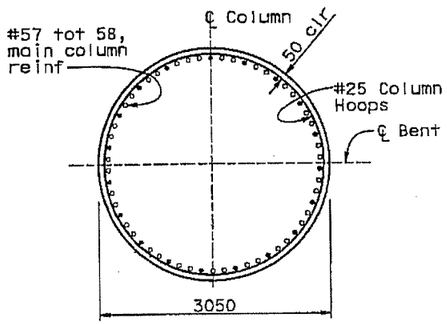

SECTION B-B

1:40

CONTRACT NO. 64-0120R4

CONTRACT CHANGE ORDER NO 60

SHEET 15 OF 25

LEGEND

- ∘ Indicates "A" Bar - #57, tot 39 (continuous)
- • Indicates "B" Bar - #57, tot 19
- ⊖ Indicates Bundled Bars

Notes:

1. For bearing details and anchor rods, see "Bearing Detail" sheets.
2. Splices in main column reinforcement shall be ultimate butt splices.
3. Hoops shall be made continuous with ultimate butt splices.
4. Top of Bent Cap elevations are based on a 50 mm mortar pad and bearing heights shown on "Bearing Detail" sheets.
5. Deck drainage system not shown pending deck drainage resolution.
6. For Bent Cap details, see "Bent Cap Details" sheets.
7. For Stopper Block details, see "Stopper Block Details" sheets.

FINAL SUPERSTRUCTURE RESUBMITTAL
Print date: 09 OCT 2006 Time: 16:00:40

ALL DIMENSIONS ARE IN MILLIMETERS UNLESS OTHERWISE SHOWN

SAN FRANCISCO OAKLAND BAY BRIDGE EAST SPAN SEISMIC SAFETY PROJECT

VIADUCT

BENT 51 LAYOUT

DESIGN OVERSIGHT	DESIGN BY L.S./J.E.	CHECKED J.A./M.P.	PREPARED FOR THE STATE OF CALIFORNIA DEPARTMENT OF TRANSPORTATION
SIGN OFF DATE	DETAILS BY G. IMBSEN	CHECKED L.S./A.K./K.N.	ELI M. ARAMOUNI, PROJECT MANAGER
	QUANTITIES BY C.C. MYERS	CHECKED C.C. MYERS	BRIDGE NO. 34-0006 (TEMP) KILOMETER POST 12.6

DESIGN DETAIL SHEET (METRIC) (REV. 3/1/98)
09 OCT 2006 6:00:40 h:\bay bridge\viaduct\steelbent51_vl.dgn

ORIGINAL SCALE IN MILLIMETERS FOR REDUCED PLANS 0 10 20 30 40 50 60 70 80 90 100

CU EA 0120R4

DISREGARD PRINTS BEARING EARLIER REVISION DATES

REVISION DATES (PRELIMINARY STAGE ONLY): 07-26-06 | 08-11-06 | 08-29-06 | 10-05-06

SHEET 13 OF 112

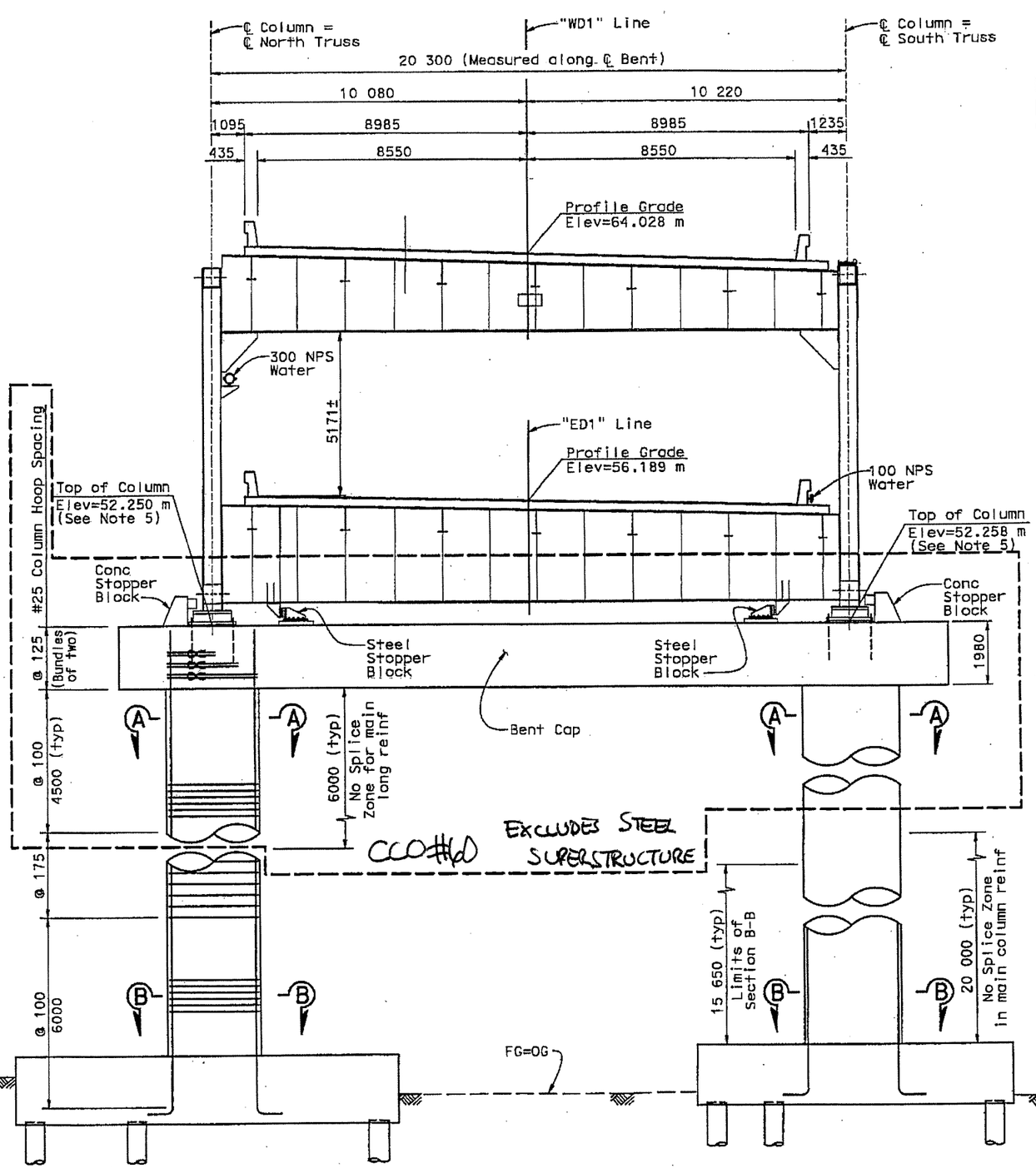

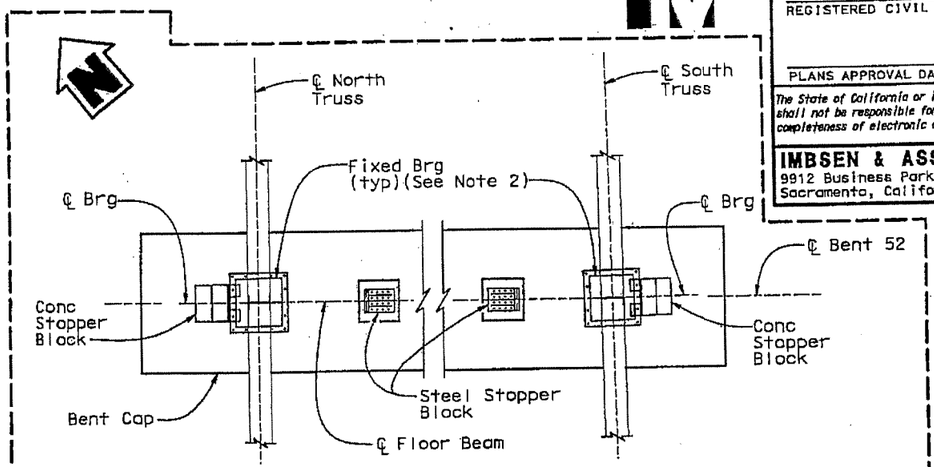

PLAN AT TOP OF BENT CAP CCO#60

1:80

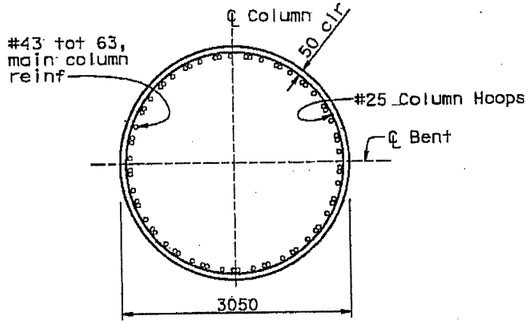

SECTION A-A

1:40

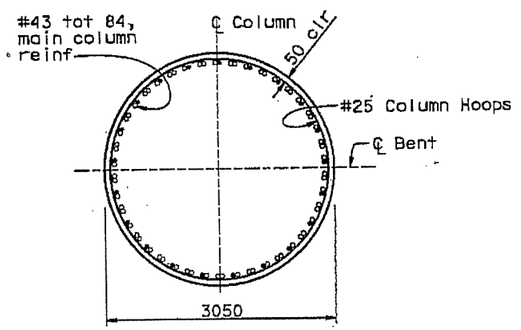

SECTION B-B

1:40

ALL DIMENSIONS ARE IN MILLIMETERS UNLESS OTHERWISE SHOWN

LEGEND

- ◦ Indicates "A" Bar - #43, tot 63
- • Indicates "B" Bar - #43, tot 21
- ~~OC~~ Indicates Bundled Bars

Notes:

1. For footing information, see "Footing Details No. 1" sheet.
2. For bearing details and anchor rods, see "Bearing Detail" sheets.
3. Splices in main column reinforcement shall be ultimate butt splices.
4. Hoops shall be made continuous with ultimate butt splices.
5. Top of Bent Cap elevations are based on a 50 mm mortar pad and bearing heights shown on "Bearing Details" sheets.
6. Deck drainage system not shown pending deck drainage resolution.
7. For Bent Cap details, see "Bent Cap Details" sheets.
8. For Stopper Block details, see "Stopper Block Details" sheets.

Caltrans Metric

04	SF	80	12.6/13.2		

Eli Arami
REGISTERED CIVIL ENGINEER

REGISTERED PROFESSIONAL ENGINEER — ELI M. ARAMOUNI — No. CE 41712 — Exp. 03-31-08 — CIVIL — STATE OF CALIFORNIA

PLANS APPROVAL DATE

The State of California or its officers or agents shall not be responsible for the accuracy or completeness of electronic copies of this plan sheet.

IMBSEN & ASSOCIATES INC.
9912 Business Park Dr., Suite 130
Sacramento, California 95827

CONTRACT NO. 04-0120R4 CONTRACT CHANGE ORDER NO 60

SHEET 16 OF 25

FINAL SUPERSTRUCTURE RESUBMITTAL
Print date: 09 OCT 2006 Time: 16:00:50

SAN FRANCISCO OAKLAND BAY BRIDGE
EAST SPAN SEISMIC SAFETY PROJECT

VIADUCT

BENT 52 LAYOUT

DESIGN	BY L.S./J.E.	CHECKED J.A./M.P.	
DETAILS	BY G. IMBSEN	CHECKED L.S./A.K./K.N.	
QUANTITIES	BY C.C. MYERS	CHECKED C.C. MYERS	

PREPARED FOR THE STATE OF CALIFORNIA DEPARTMENT OF TRANSPORTATION

ELI M. ARAMOUNI
PROJECT MANAGER

DESIGN OVERSIGHT

SIGN OFF DATE

BRIDGE NO. 34-0006 (TEMP)
KILOMETER POST 12.6

CU
EA 0120R4

DISREGARD PRINTS BEARING EARLIER REVISION DATES →

REVISION DATES (PRELIMINARY STAGE ONLY)
07-24-06 | 10-03-06

SHEET 14 OF 112

DESIGN DETAIL SHEET (METRIC) (REV. 3/1/98)
09 OCT 2006 16:00:50 h:\bay bridge\viaduct\ateslpent52_vl.dgn

ORIGINAL SCALE IN MILLIMETERS
FOR REDUCED PLANS 0 10 20 30 40 50 60 70 80 90 100

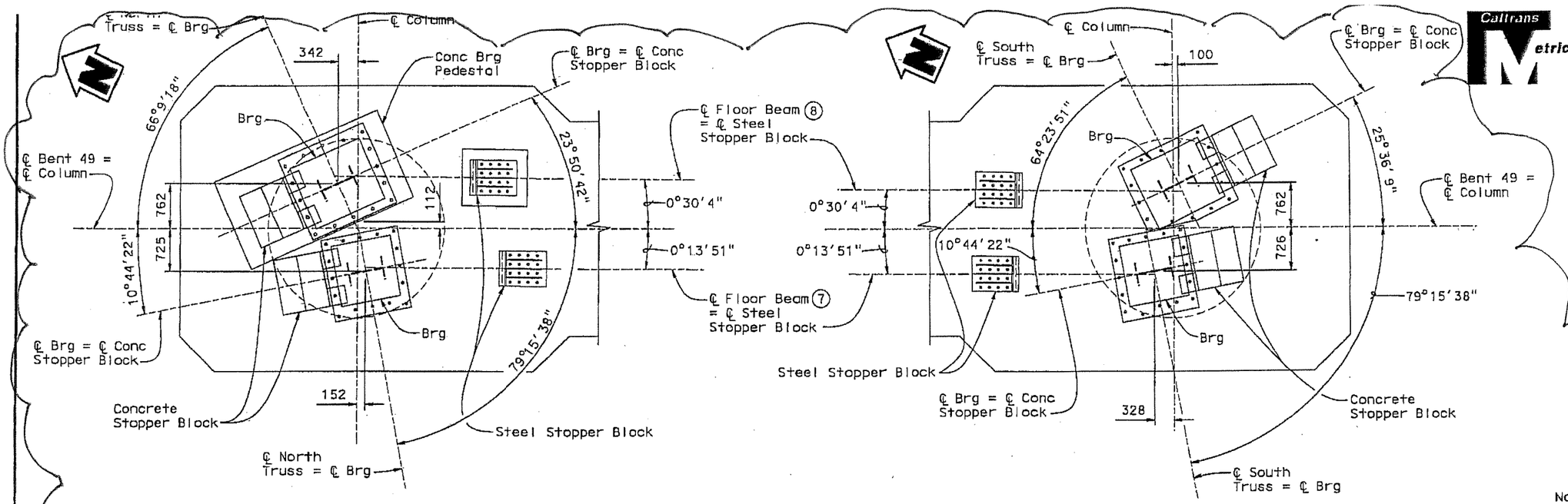

BENT 49L PLAN

1:40

BENT 49R PLAN

1:40

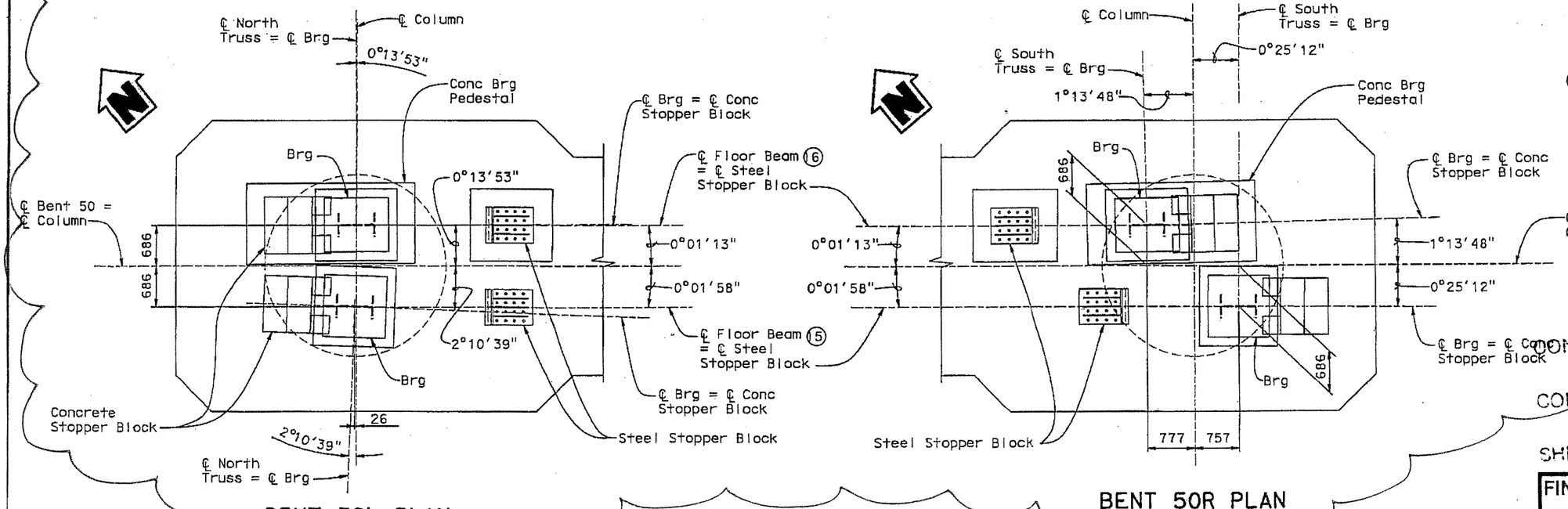

BENT 50L PLAN

1:40

BENT 50R PLAN

1:40

ALL DIMENSIONS ARE IN MILLIMETERS UNLESS OTHERWISE SHOWN

Notes:

1. For bearing details and anchor rods, see "Bearing Detail" sheets.
2. For Stopper Block details, see "Stopper Block Details" sheets.
3. For Concrete Pedestals, see "Concrete Pedestal Details" sheet.

04	SF	80	12.6/13.2

Caltrans Metric

REGISTERED CIVIL ENGINEER

PLANS APPROVAL DATE

The State of California or its officers or agents shall not be responsible for the accuracy or completeness of electronic copies of this plan sheet.

REGISTERED PROFESSIONAL ENGINEER — ELI M. ARAMOUNI — No. CE 41712 — Exp. 03-31-08 — CIVIL — STATE OF CALIFORNIA

IMBSEN & ASSOCIATES INC.
9912 Business Park Dr., Suite 130
Sacramento, California 95827

CCO #60

CONTRACT NO. 04-0120R4

CONTRACT CHANGE ORDER NO 60

SHEET 17 OF 25

FINAL SUPERSTRUCTURE RESUBMITTAL
Print date: 09 OCT 2006 Time: 15:00:11

SAN FRANCISCO OAKLAND BAY BRIDGE EAST SPAN SEISMIC SAFETY PROJECT

VIADUCT

BENT CAP DETAILS NO. 1

	BY	CHECKED
DESIGN	G.D./A.K.	D.S./K.N.
DETAILS	J. VALENTINE	G.D./A.K./K.N.
QUANTITIES	C.C. MYERS	C.C. MYERS

DESIGN OVERSIGHT

SIGN OFF DATE

PREPARED FOR THE STATE OF CALIFORNIA DEPARTMENT OF TRANSPORTATION

ELI M. ARAMOUNI
PROJECT MANAGER

BRIDGE NO. 34-0006 (TEMP)
KILOMETER POST 12.6

CU EA 0120R4

DISREGARD PRINTS BEARING EARLIER REVISION DATES

REVISION DATES (PRELIMINARY STAGE ONLY): 10-09-06

SHEET 14A OF 112

DESIGN DETAIL SHEET (METRIC) (REV. 3/1/98)
09 OCT 2006 6:00:11 h:\bay bridge\viaduct\steelbent50b_vl.dgn

ORIGINAL SCALE IN MILLIMETERS FOR REDUCED PLANS 0 10 20 30 40 50 60 70 80 90 100

FILE => SPREQUEST

04	SF	80	12.6/13.2	

Eli Arai
REGISTERED CIVIL ENGINEER

PLANS APPROVAL DATE

REGISTERED PROFESSIONAL ENGINEER — ELI M. ARAMOUNI — No. CE 41712 — Exp. 03-31-08 — CIVIL — STATE OF CALIFORNIA

The State of California or its officers or agents shall not be responsible for the accuracy or completeness of electronic copies of this plan sheet.

IMBSEN & ASSOCIATES INC.
9912 Business Park Dr., Suite 130
Sacramento, California 95827

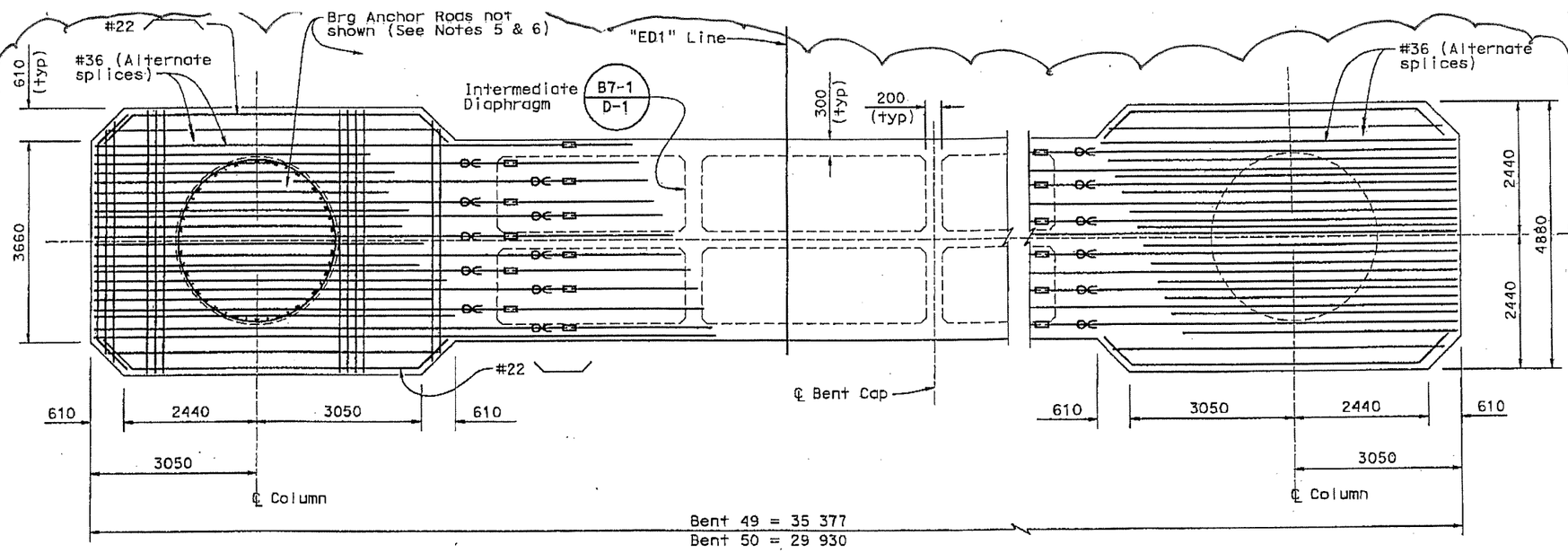

BOTTOM MAT REINFORCMENT

TOP MAT REINFORCMENT

PLAN
1:50

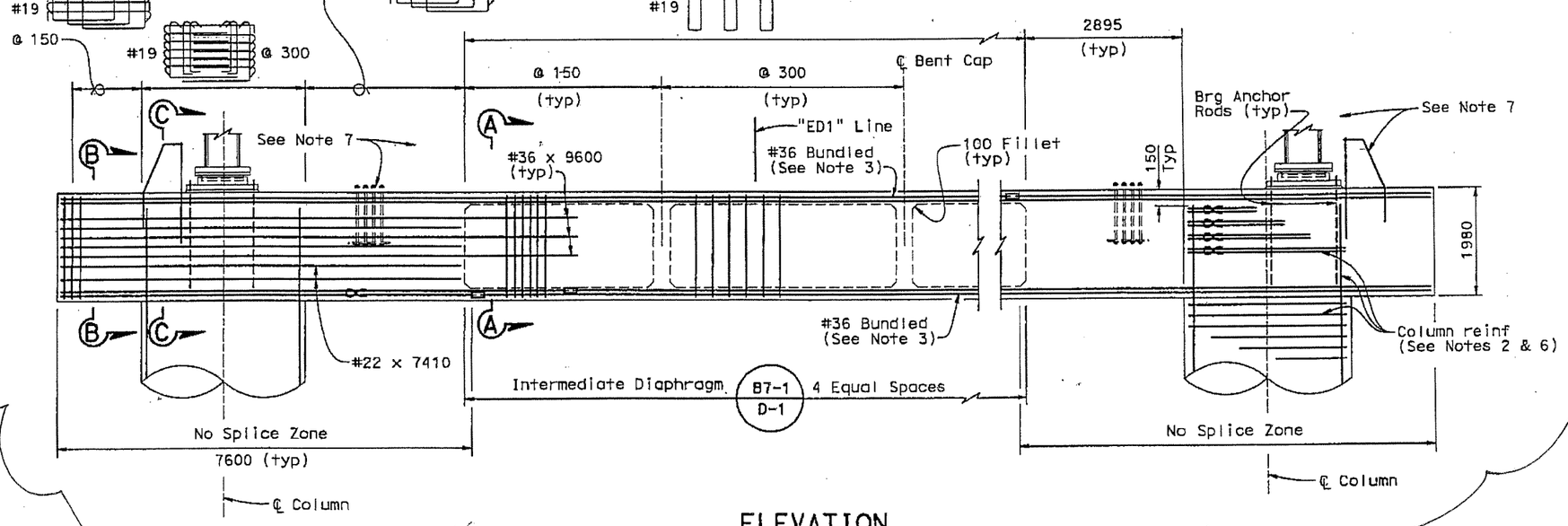

ELEVATION
1:50

BENTS 49 & 50

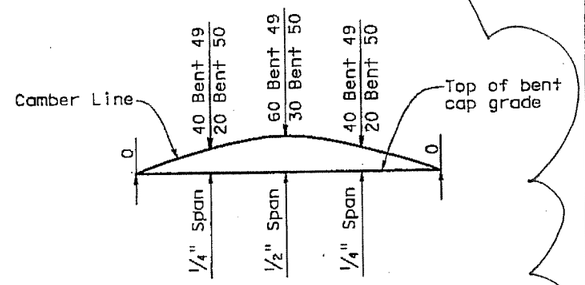

CCO #60

CAMBER DIAGRAM
NO SCALE

(Does not include allowance for falsework settlement)

LEGEND:

Indicates Ultimate Butt Splice

Indicates Bundled Bars

Notes:

1. The Contractor shall verify all controlling field dimensions before ordering or fabricating any material.
2. For column reinforcement, see "Bent 49 and Bent 50L layout" sheets.
3. No more than 25% of ultimate butt splices occur at the same location in the main longitudinal reinforcement.
4. For Sections,"A-A", "B-B" and "C-C", see "Bent Cap Details No.3" sheet.
5. For location of bearing anchor rods, see "Column Details No. 2" sheet and Bearing Details sheets.
6. Adjust location of bent reinforcement to avoid conflict with bearing anchor rods and vertical column reinforcement bars.
7. For stopper block details, see "Stopper Block Details" sheets.

CONTRACT NO. 04-0120R4

CONTRACT CHANGE ORDER NO 60

FINAL SUPERSTRUCTURE RESUBMITTAL
Print date: 09 OCT 2006 Time: 16:01:25

ALL DIMENSIONS ARE IN METERS UNLESS OTHERWISE SHOWN

SAN FRANCISCO OAKLAND BAY BRIDGE
EAST SPAN SEISMIC SAFETY PROJECT

VIADUCT

BENT CAP DETAILS NO. 2

DESIGN OVERSIGHT	SHEET 18 OF 25	DESIGN	BY A. KALIDINDI	CHECKED S. NAGI
SIGN OFF DATE		DETAILS	BY R. CARTER	CHECKED S. NAGI
		QUANTITIES	BY C.C. MYERS	CHECKED C.C. MYERS

PREPARED FOR THE STATE OF CALIFORNIA
DEPARTMENT OF TRANSPORTATION

ELI M. ARAMOUNI
PROJECT MANAGER

BRIDGE NO.	KILOMETER POST
34-0006 (TEMP)	12.6

CU
EA 0120R4

DISREGARD PRINTS BEARING EARLIER REVISION DATES

REVISION DATES (PRELIMINARY STAGE ONLY): 09-06-06 | 10-05-06

SHEET 148 OF 112

DESIGN DETAIL SHEET (METRIC) (REV. 3/1/98)
09 OCT 2006 16:01:25 h:\bay bridge\viaduct\e-bntdet01_vi.dgn

ORIGINAL SCALE IN MILLIMETERS FOR REDUCED PLANS 0 10 20 30 40 50 60 70 80 90 100

04	SF	80	12.6/13.2

Metric

Eli Arai
REGISTERED CIVIL ENGINEER

PLANS APPROVAL DATE

REGISTERED PROFESSIONAL ENGINEER
ELI M. ARAMOUNI
No. CE 41712
Exp. 03-31-08
CIVIL
STATE OF CALIFORNIA

The State of California or its officers or agents shall not be responsible for the accuracy or completeness of electronic copies of this plan sheet.

IMBSEN & ASSOCIATES INC.
9912 Business Park Dr., Suite 130
Sacramento, California 95827

CCO #60

CONTRACT NO. 04-0120R4

CONTRACT CHANGE ORDER NO 60

SHEET 19 OF 25

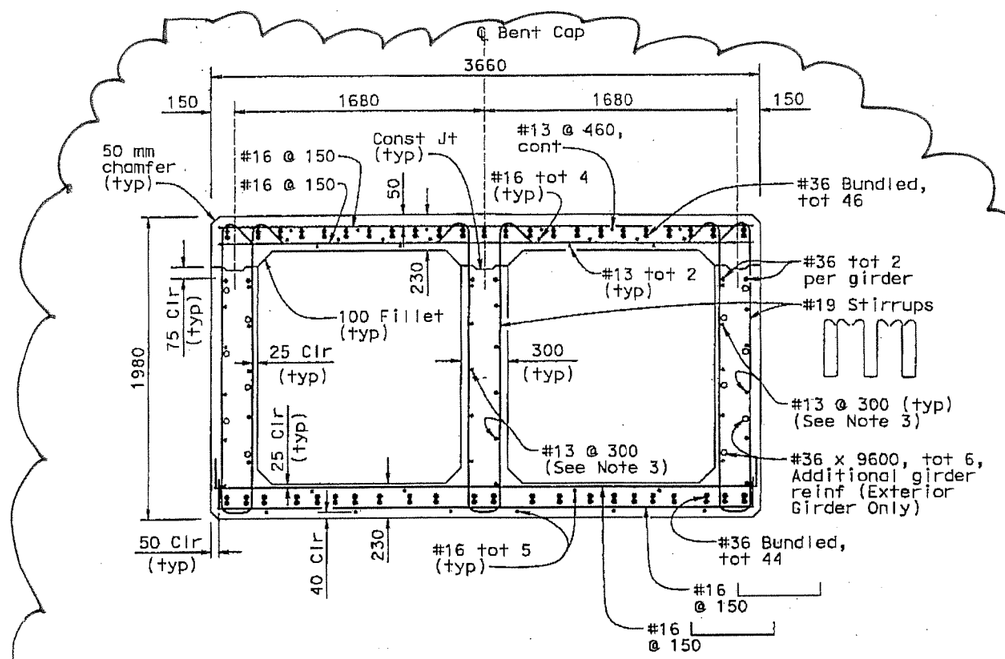

SECTION A-A
1:20

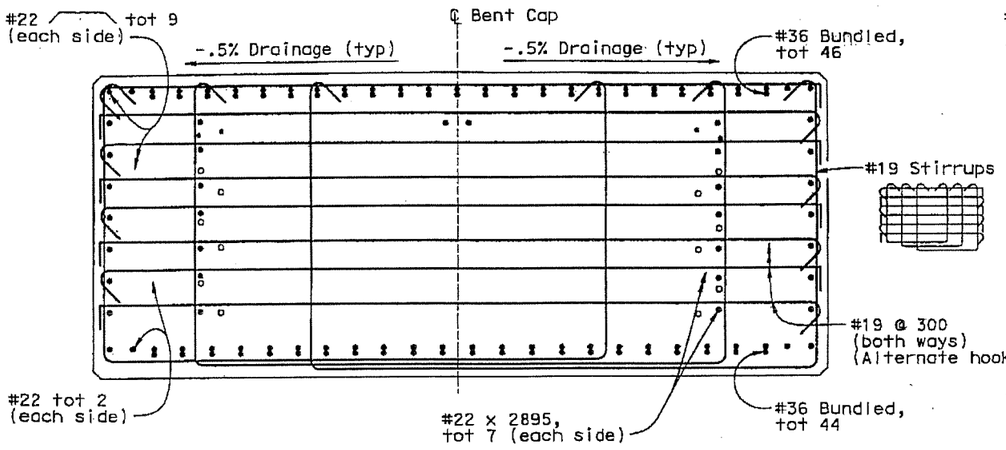

Note: For details not shown, see "Section A-A"

SECTION B-B
1:20

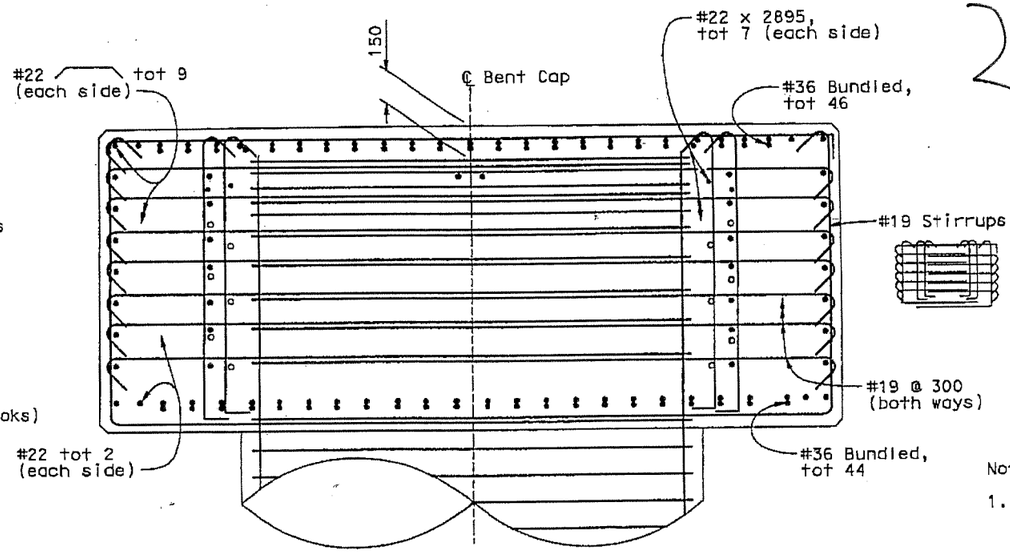

Note: For details not shown, see "Section A-A"

SECTION C-C
1:20

Notes:

1. The Contractor shall verify all controlling field dimensions before ordering or fabricating any material.
2. For column reinforcement, see Bent 49 and Bent 50 layout sheets.
3. Embed 600 mm into cap ends.

FINAL SUPERSTRUCTURE RESUBMITTAL
Print date: 09 OCT 2006 Time: 16:25:12

ALL DIMENSIONS ARE IN METERS UNLESS OTHERWISE SHOWN

SAN FRANCISCO OAKLAND BAY BRIDGE
EAST SPAN SEISMIC SAFETY PROJECT

VIADUCT

BENT CAP DETAILS NO. 3

DESIGN	BY A. KALIDINDI	CHECKED S. NAGI	
DETAILS	BY R. CARTER	CHECKED S. NAGI	
QUANTITIES	BY C.C. MYERS	CHECKED C.C. MYERS	

DESIGN OVERSIGHT

SIGN OFF DATE

PREPARED FOR THE STATE OF CALIFORNIA DEPARTMENT OF TRANSPORTATION

ELI M. ARAMOUNI
PROJECT MANAGER

BRIDGE NO. 34-0006 (TEMP)
KILOMETER POST 12.6

DISREGARD PRINTS BEARING EARLIER REVISION DATES

REVISION DATES (PRELIMINARY STAGE ONLY) 09-06-06 10-09-06

SHEET 14C OF 112

DESIGN DETAIL SHEET (METRIC) (REV. 3/1/98)
09 OCT 2006 6:25:12 h:\bay bridge\viaduct\e-bntdet02_vi.dgn

ORIGINAL SCALE IN MILLIMETERS FOR REDUCED PLANS 0 10 20 30 40 50 60 70 80 90 100

CU
EA 0120R4

FILE -> $REQUEST

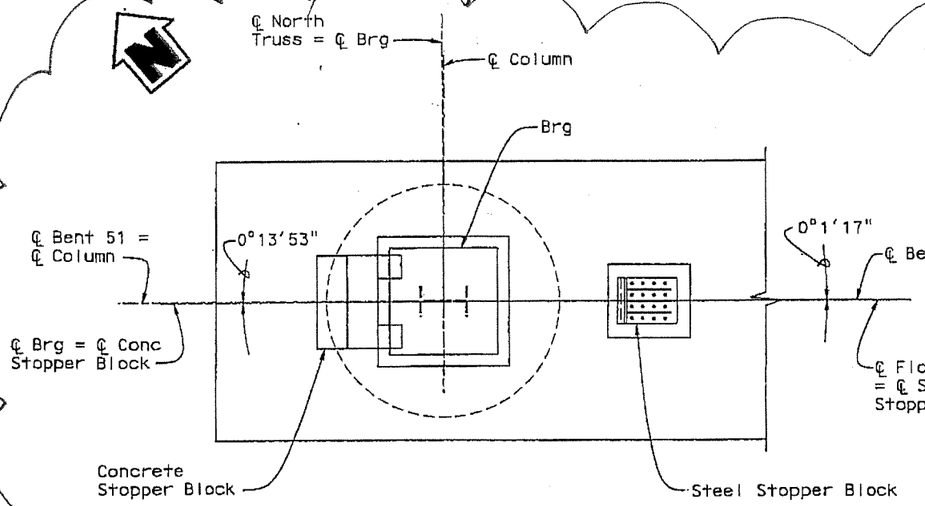

BENT 51L PLAN

1:40

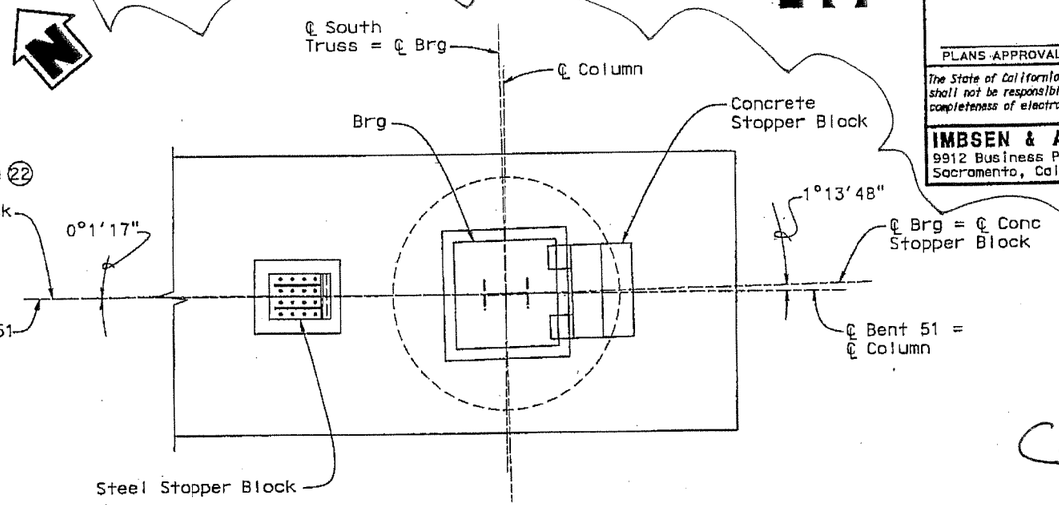

BENT 51R PLAN

1:40

Notes:

1. For bearing details and anchor rods, see "Bearing Detail" sheets.
2. For Stopper Block details, see "Stopper Block Detail" sheets.
3. For Concrete Pedestals, see "Concrete Pedestal Details" sheet.

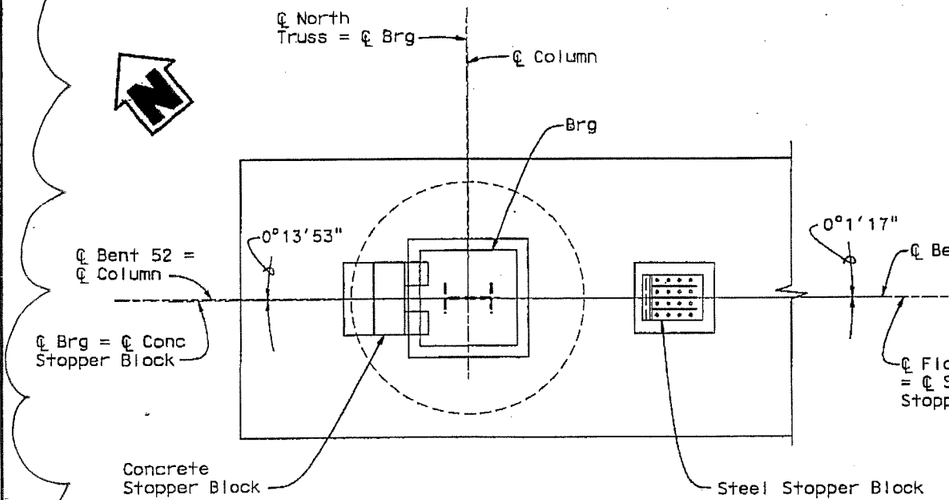

BENT 52L PLAN

1:40

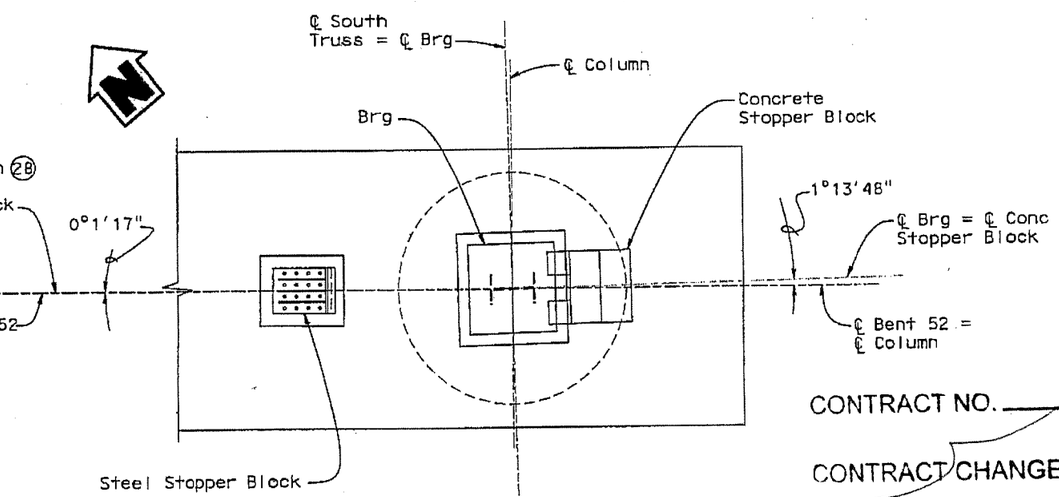

BENT 52R PLAN

1:40

04	SF	80	12.6/13.2		

ELI M. ARAMOUNI
REGISTERED CIVIL ENGINEER

PLANS APPROVAL DATE

REGISTERED PROFESSIONAL ENGINEER — ELI M. ARAMOUNI — No. CE 41712 — Exp. 03-31-08 — CIVIL — STATE OF CALIFORNIA

The State of California or its officers or agents shall not be responsible for the accuracy or completeness of electronic copies of this plan sheet.

IMBSEN & ASSOCIATES INC.
9912 Business Park Dr., Suite 130
Sacramento, California 95827

CCO#60

CONTRACT NO. 04-0120R4

CONTRACT CHANGE ORDER NO 60

SHEET 20 OF 25

FINAL SUPERSTRUCTURE RESUBMITTAL
Print date: 09 OCT 2006 Time: 16:19:08

ALL DIMENSIONS ARE IN MILLIMETERS UNLESS OTHERWISE SHOWN

SAN FRANCISCO OAKLAND BAY BRIDGE
EAST SPAN SEISMIC SAFETY PROJECT

VIADUCT

BENT CAP DETAILS NO. 4

DESIGN	BY G.D./A.K.	CHECKED D.S./K.N.	
DETAILS	BY G. IMBSEN	CHECKED G.D./A.K./K.N.	
QUANTITIES	BY C.C. MYERS	CHECKED C.C. MYERS	

DESIGN OVERSIGHT

SIGN OFF DATE

PREPARED FOR THE STATE OF CALIFORNIA DEPARTMENT OF TRANSPORTATION

ELI M. ARAMOUNI
PROJECT MANAGER

BRIDGE NO. 34-0006 (TEMP)
KILOMETER POST 12.6

CU
EA 0120R4

DISREGARD PRINTS BEARING EARLIER REVISION DATES →

REVISION DATES (PRELIMINARY STAGE ONLY): 07-25-06 | 10-09-06

SHEET 140 OF 112

DESIGN DETAIL SHEET (METRIC) (REV. 3/1/95)
09 OCT 2006 6:19:08 h:\bay bridge\viaduct\steelbent51b_v1.dgn

ORIGINAL SCALE IN MILLIMETERS FOR REDUCED PLANS 0 10 20 30 40 50 60 70 80 90 100

FILE => sPREQUEST

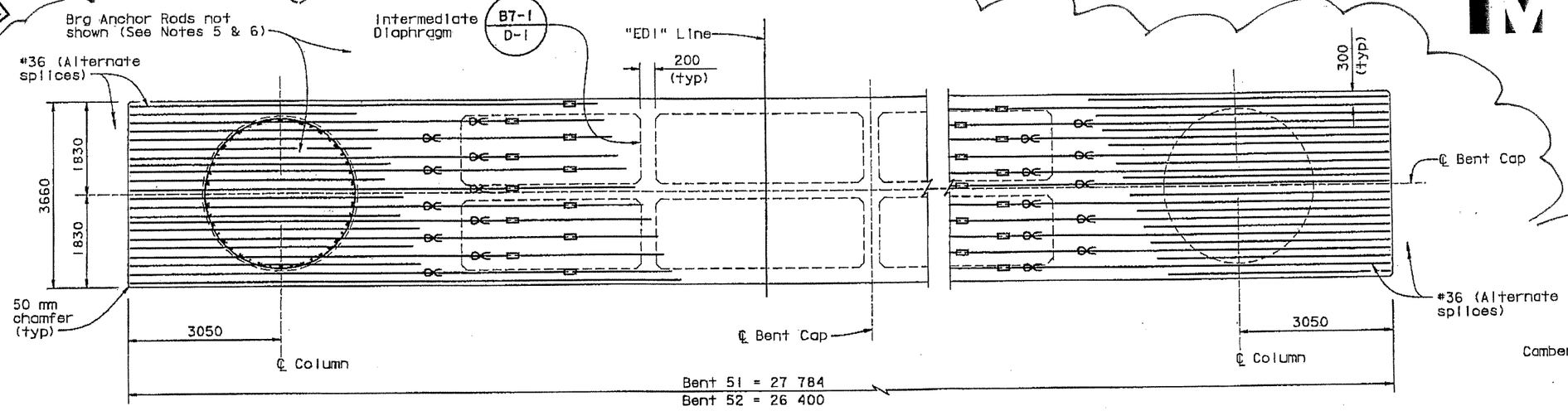

BOTTOM MAT REINFORCMENT

TOP MAT REINFORCMENT

PLAN
1:50

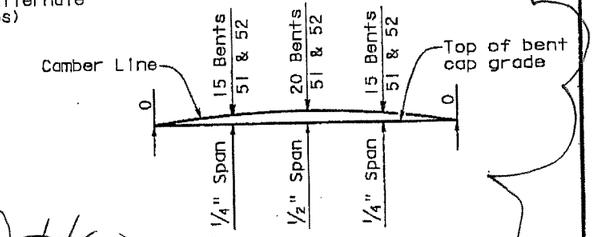

CCO #60

CAMBER DIAGRAM
NO SCALE

(Does not include allowance for falsework settlement)

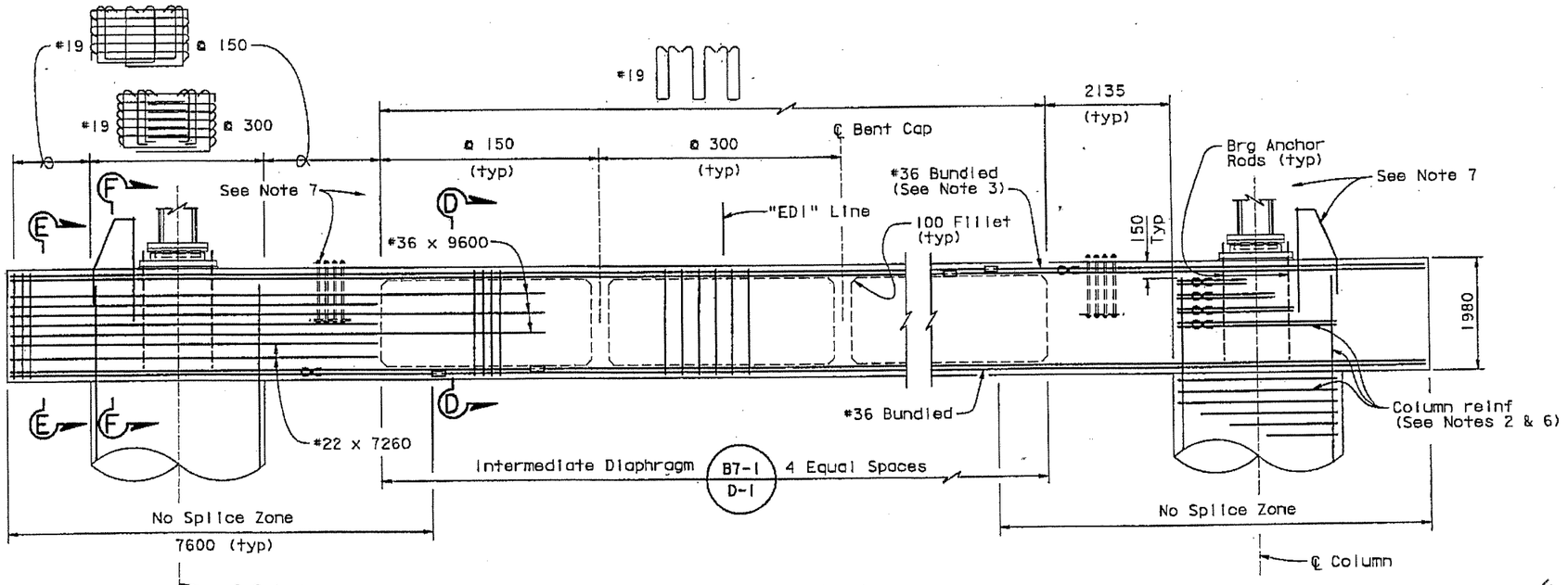

ELEVATION
1:50

BENTS 51 & 52

LEGEND:

- Indicates Ultimate Butt Splice
- Indicates Bundled Bars

Notes:

1. The Contractor shall verify all controlling field dimensions before ordering or fabricating any material.
2. For column reinforcement, see "Bent 51 and Bent 52 Layout" sheets.
3. No more than 25% of ultimate butt splices occur at the same location in the main longitudinal reinforcement.
4. For Sections, "D-D", "E-E" and "F-F", see "Bent Cap Details No.6" sheet.
5. For location of bearing anchor rods, see Bearing Details sheets.
6. Adjust location of bent reinforcement to avoid conflict with bearing anchor rods and vertical column reinforcement bars.
7. For stopper block details, see "Stopper Block Details" sheets.

CONTRACT NO. 04-0120R4

CONTRACT CHANGE ORDER NO 60

SHEET 21 OF 25

ALL DIMENSIONS ARE IN METERS UNLESS OTHERWISE SHOWN

FINAL SUPERSTRUCTURE RESUBMITTAL
Print date: 09 OCT 2006 Time: 14:12:57

SAN FRANCISCO OAKLAND BAY BRIDGE
EAST SPAN SEISMIC SAFETY PROJECT

VIADUCT

BENT CAP DETAILS NO. 5

DESIGN	BY A. KALIDINDI	CHECKED S. NAGI	
DETAILS	BY R. CARTER	CHECKED S. NAGI	
QUANTITIES	BY C.C. MYERS	CHECKED C.C. MYERS	

PREPARED FOR THE STATE OF CALIFORNIA DEPARTMENT OF TRANSPORTATION

ELI M. ARAMOUNI
PROJECT MANAGER

BRIDGE NO. 34-0006 (TEMP)
KILOMETER POST 12.6

DISREGARD PRINTS BEARING EARLIER REVISION DATES

REVISION DATES (PRELIMINARY STAGE ONLY) 09-06-06 10-09-06

SHEET 14E OF 112

DESIGN OVERSIGHT

SIGN OFF DATE

DESIGN DETAIL SHEET (METRIC) (REV. 3/1/98)
09 OCT 2006 4:12:57 h:\bay bridge\viaduct\e-bntdet03_vi.dgn

ORIGINAL SCALE IN MILLIMETERS FOR REDUCED PLANS 0 10 20 30 40 50 60 70 80 90 100

CU
EA 0120R4

FILE => $REQUEST

Metric

Eli Aqi
REGISTERED CIVIL ENGINEER

PLANS APPROVAL DATE

The State of California or its officers or agents shall not be responsible for the accuracy or completeness of electronic copies of this plan sheet.

REGISTERED PROFESSIONAL ENGINEER ELI M. ARAMOUNI No. CE 41712 Exp. 03-31-08 CIVIL STATE OF CALIFORNIA

IMBSEN & ASSOCIATES INC.
9912 Business Park Dr., Suite 130
Sacramento, California 95827

04	SF	80	12.6/13.2	

Eli Arai
REGISTERED CIVIL ENGINEER

PLANS APPROVAL DATE

The State of California or its officers or agents shall not be responsible for the accuracy or completeness of electronic copies of this plan sheet.

ELI M. ARAMOUNI No. CE 41712 Exp. 03-31-08 CIVIL STATE OF CALIFORNIA

IMBSEN & ASSOCIATES INC.
9912 Business Park Dr., Suite 130
Sacramento, California 95827

CCO#60

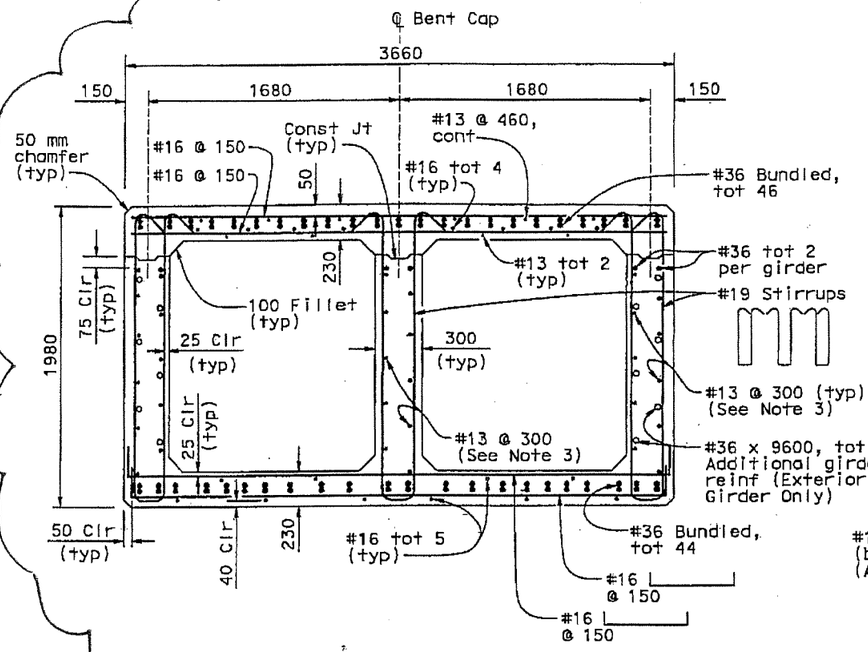

SECTION D-D
1:20

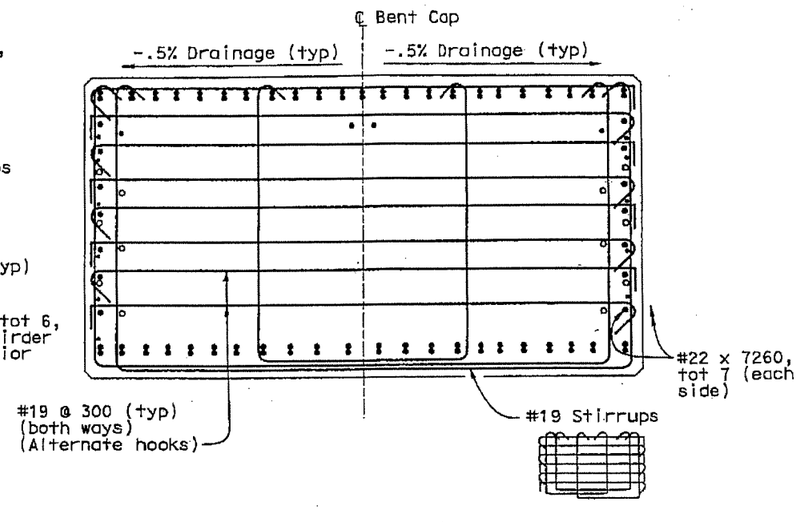

Note: For details not shown, see "Section D-D"

SECTION E-E
1:20

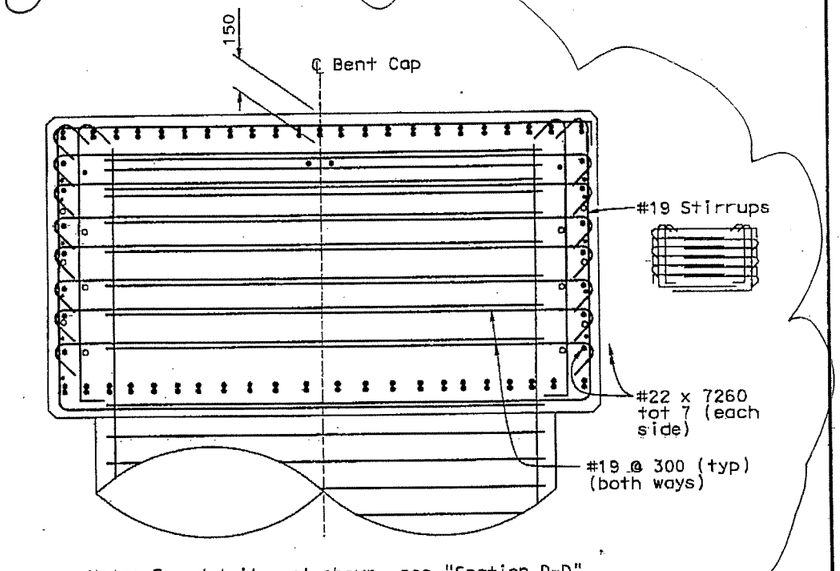

Note: For details not shown, see "Section D-D"

SECTION F-F
1:20

CONTRACT NO. 04-0120R4

CONTRACT CHANGE ORDER NO 60

SHEET 22 OF 25

BENTS 51 & 52

Notes: CCO#60

1. The Conctractor shall verify all controlling field dimensions before ordering or fabricating any material.
2. For column reinforcement, see Bent 51 and Bent 52 layout sheets.
3. Embed 600 mm into cap ends.

FINAL SUPERSTRUCTURE RESUBMITTAL
Print date: 09 OCT 2006 Time: 16:24:37

ALL DIMENSIONS ARE IN METERS-UNLESS OTHERWISE SHOWN

SAN FRANCISCO OAKLAND BAY BRIDGE
EAST SPAN SEISMIC SAFETY PROJECT

VIADUCT

BENT CAP DETAILS NO. 6

DESIGN	A. KALIDINDI	CHECKED	S. NAGI
DETAILS	R. CARTER	CHECKED	S. NAGI
QUANTITIES	C.C. MYERS	CHECKED	C.C. MYERS

PREPARED FOR THE STATE OF CALIFORNIA DEPARTMENT OF TRANSPORTATION

ELI M. ARAMOUNI
PROJECT MANAGER

DESIGN OVERSIGHT

SIGN OFF DATE

BRIDGE NO. 34-0006 (TEMP)
KILOMETER POST 12.6

CU 04
EA 0120R4

DISREGARD PRINTS BEARING EARLIER REVISION DATES →

REVISION DATES (PRELIMINARY STAGE ONLY) 09-04-06 10-09-06

SHEET 14F OF 112

DESIGN DETAIL SHEET (METRIC) (REV. 3/1/98)
09 OCT 2006 6:24:37 n:\bay bridge\viaduct\e-bntdet04_vl.dgn

ORIGINAL SCALE IN MILLIMETERS FOR REDUCED PLANS 0 10 20 30 40 50 60 70 80 90 100

FILE => SPREQUEST

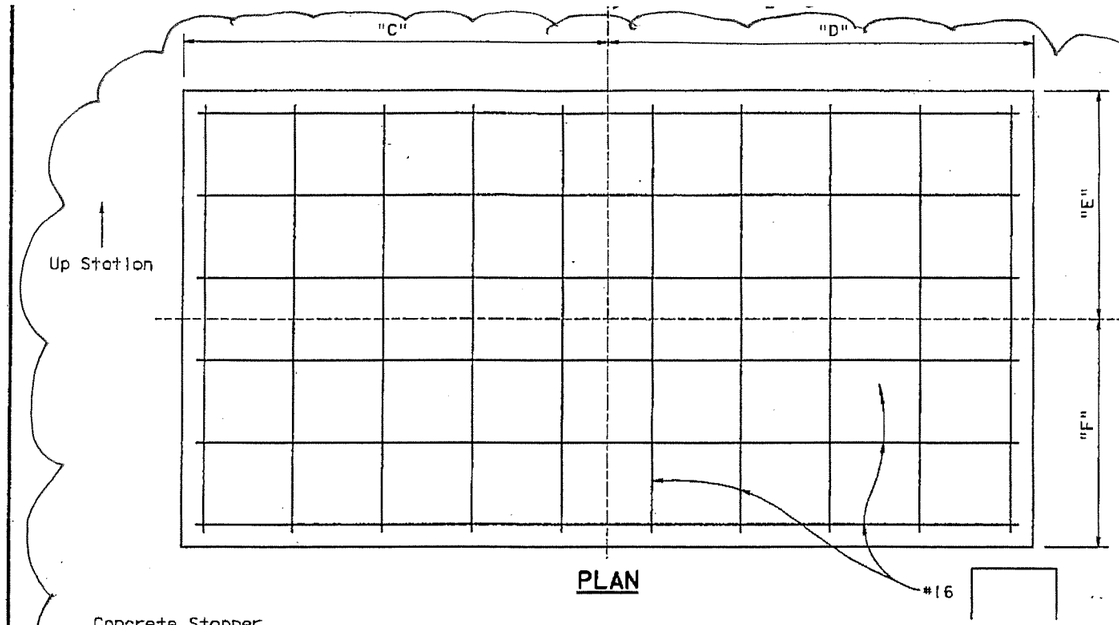

PLAN

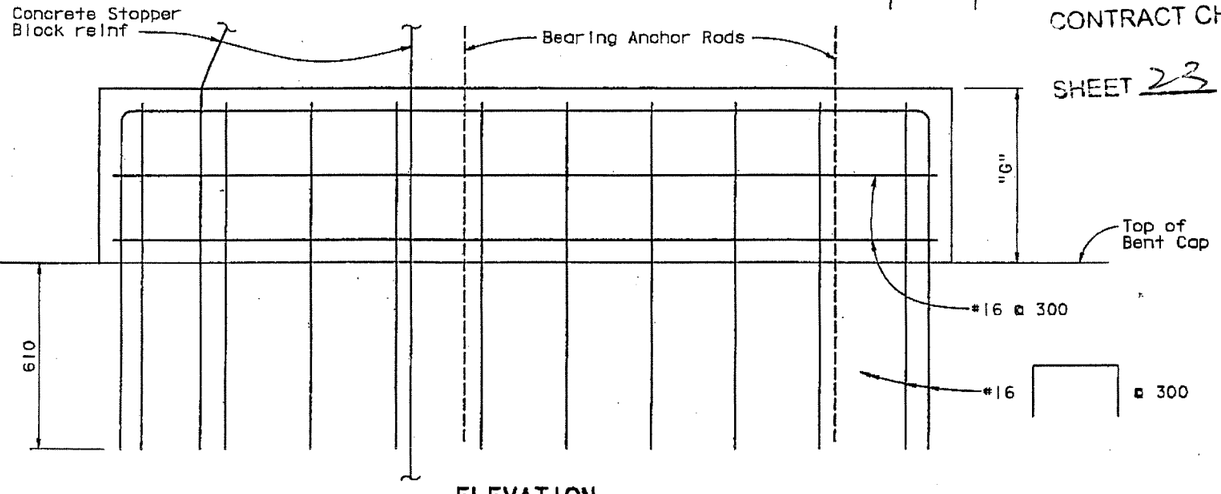

ELEVATION

CONCRETE BEARING PEDESTAL

1:10

Note:

1. For Brg Mounting ℄ details, see "Bearing Details" sheets

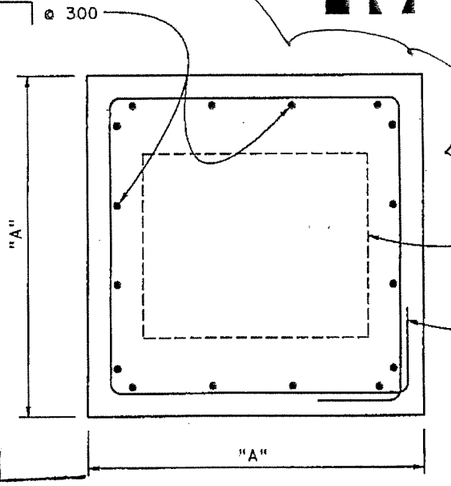

PLAN

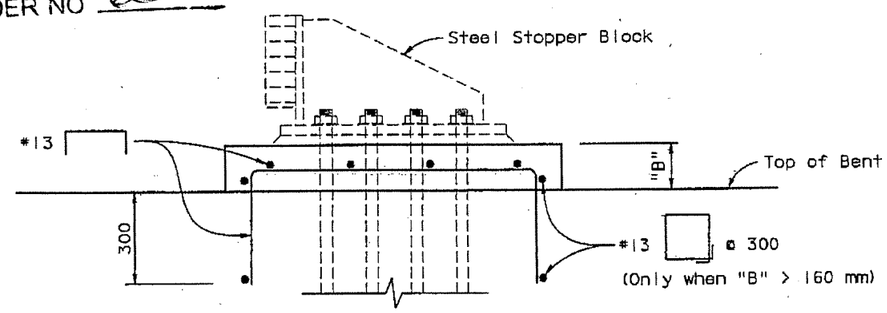

ELEVATION

CONCRETE PEDESTAL @ STEEL STOPPER BLOCKS

1:10

CCO#60

CONTRACT NO. 04-0120R4

CONTRACT CHANGE ORDER NO 60

SHEET 23 OF 25

BEARING PEDESTAL DIMENSIONS

Floor Beam #	"C"		"D"		"E"		"F"		"G"	
	North Truss	South Truss	North Truss	South Truss	North Truss	South Truss	North Truss	South Truss	North Truss	South Truss
⑧	1925	-	1115	-	875	-	740	-	140	-
⑯	1835	988	988	1835	700	700	651	651	635	635

STEEL STOPPER BLOCK PEDESTAL DIMENSIONS

Floor Beam #	"A"		"B"	
	North Truss	South Truss	North Truss	South Truss
⑧	1115	-	150	-
⑯	1425	1425	700	700
㉒	1115	1115	150	150
㉘	1080	1080	130	130

04 | SF | 80 | 12.6/13.2

Eli Arami
REGISTERED CIVIL ENGINEER

PLANS APPROVAL DATE

REGISTERED PROFESSIONAL ENGINEER — ELI M. ARAMOUNI — No. CE 41712 — Exp. 03-31-08 — CIVIL — STATE OF CALIFORNIA

The State of California or its officers or agents shall not be responsible for the accuracy or completeness of electronic copies of this plan sheet.

IMBSEN & ASSOCIATES INC.
9912 Business Park Dr., Suite 130
Sacramento, California 95827

FINAL SUPERSTRUCTURE RESUBMITTAL
Print date: 09 OCT 2006 Time: 14:46:12

ALL DIMENSIONS ARE IN MILLIMETERS UNLESS OTHERWISE SHOWN

SAN FRANCISCO OAKLAND BAY BRIDGE
EAST SPAN SEISMIC SAFETY PROJECT

VIADUCT

CONCRETE PEDESTAL DETAILS

DESIGN OVERSIGHT

SIGN OFF DATE

		CHECKED
DESIGN	BY A. KALIDINDI	S. NAGI
DETAILS	BY K. DRESBACH	S. NAGI
QUANTITIES	BY C.C. MYERS	C.C. MYERS

PREPARED FOR THE STATE OF CALIFORNIA
DEPARTMENT OF TRANSPORTATION

ELI M. ARAMOUNI
PROJECT MANAGER

BRIDGE NO. 34-0006 (TEMP)
KILOMETER POST 12.6

CU EA 0120R4

DISREGARD PRINTS BEARING EARLIER REVISION DATES →

REVISION DATES (PRELIMINARY STAGE ONLY): 10-03-06 | 10-09-06

SHEET 146 OF 112

DESIGN DETAIL SHEET (METRIC) (REV. 3/1/98)
09 OCT 2006 4:46:12 h:\bay bridge\viaduct\conpeds.dgn

ORIGINAL SCALE IN MILLIMETERS FOR REDUCED PLANS 0 10 20 30 40 50 60 70 80 90 100

FILE => SPREQUEST

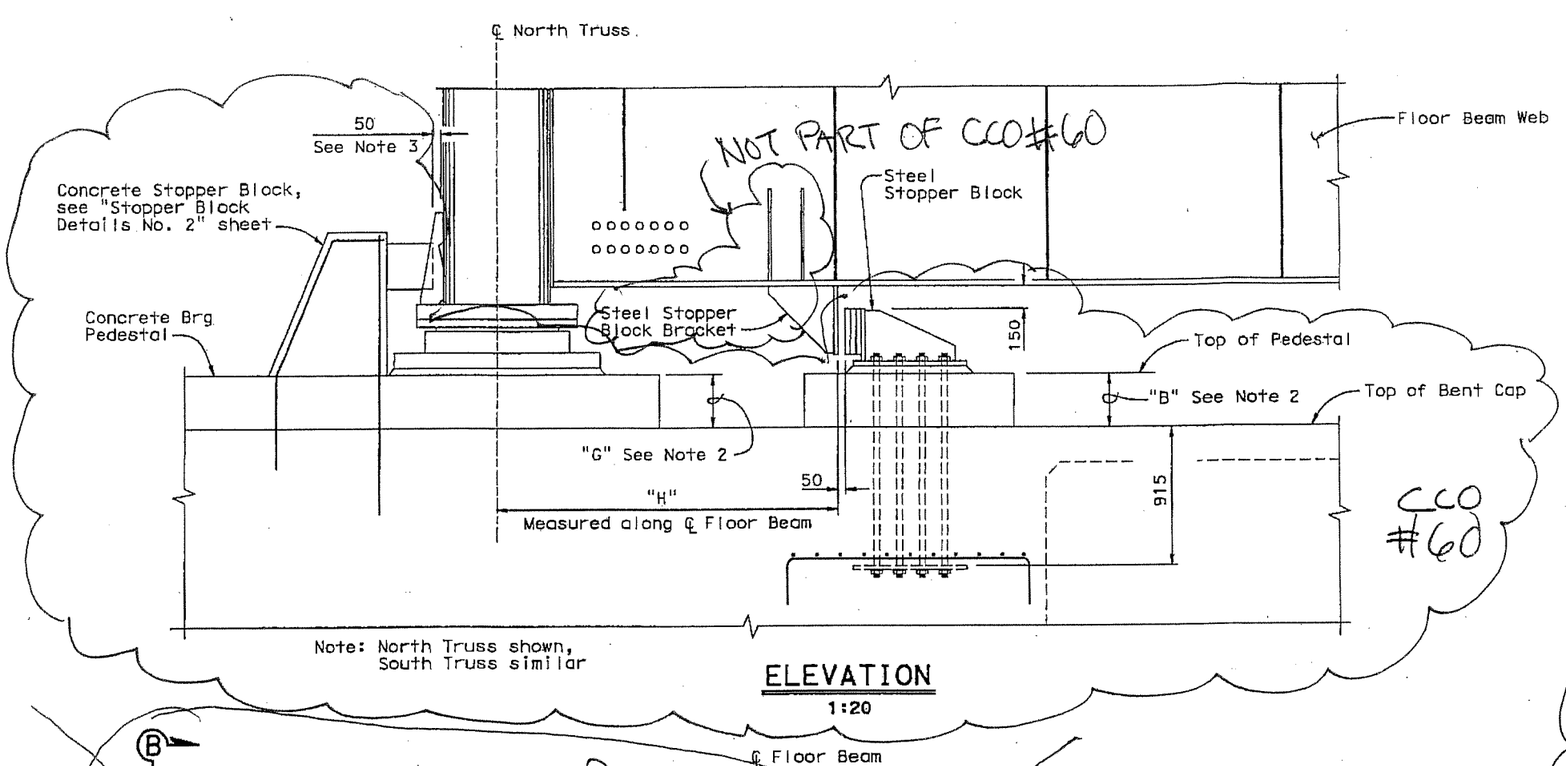

ELEVATION

1:20

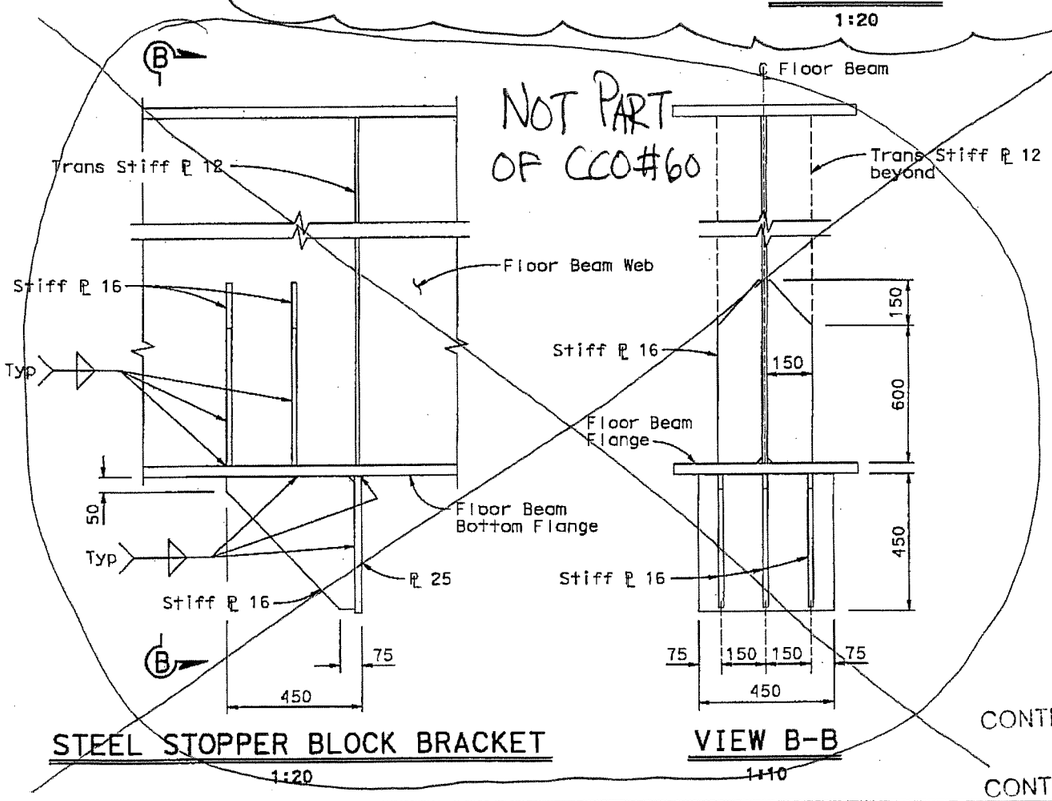

STEEL STOPPER BLOCK BRACKET

1:20

VIEW B-B

1:10

STEEL STOPPER BLOCK DIMENSIONS

Floor Beam #	"H" Dimension	
	North Truss	South Truss
⑦	2277	2277
⑧	2314	2694
⑮	2170	2256
⑯	2157	2259
㉒	2255	2255
㉘	2255	2255

Notes:

1. The Contractor shall verify all controlling field dimensions before ordering or fabricating any material.
2. For dimensions "B" and "G", see "Concrete Pedestal Details" sheet.
3. Clear space between bolt head and ℙ 25.

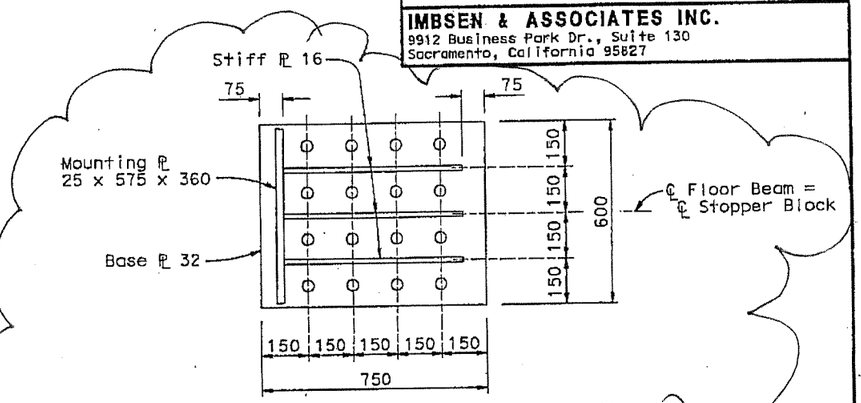

PLAN

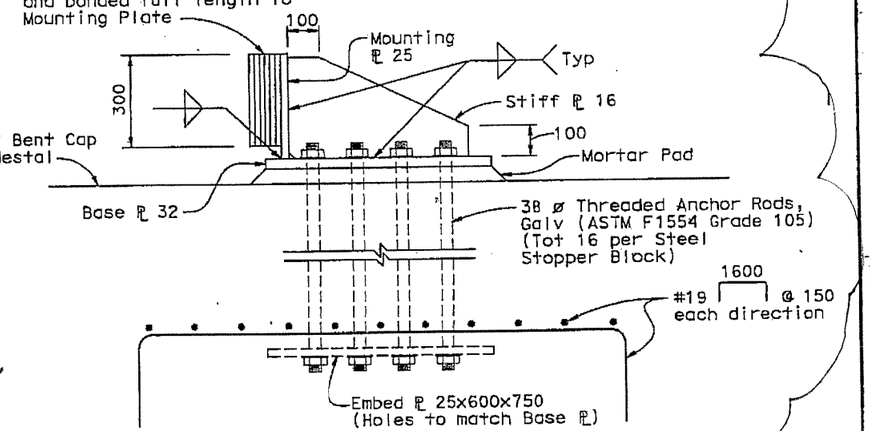

ELEVATION

STEEL STOPPER BLOCK

1:10

CCO #60

Notes:

CONTRACT NO. 04-0120R4

CONTRACT CHANGE ORDER NO 60

ALL DIMENSIONS ARE IN MILLIMETERS UNLESS OTHERWISE SHOWN

04 | SF | 80 | 12.6/13.2

Eli Aragi
REGISTERED CIVIL ENGINEER

REGISTERED PROFESSIONAL ENGINEER — ELI M. ARAMOUNI, No. CE 41712, Exp. 03-31-08, CIVIL, STATE OF CALIFORNIA

PLANS APPROVAL DATE

The State of California or its officers or agents shall not be responsible for the accuracy or completeness of electronic copies of this plan sheet.

IMBSEN & ASSOCIATES INC.
9912 Business Park Dr., Suite 130
Sacramento, California 95827

FINAL SUPERSTRUCTURE RESUBMITTAL
Print date: 09 OCT 2006 Time: 16:21:49

SAN FRANCISCO OAKLAND BAY BRIDGE
EAST SPAN SEISMIC SAFETY PROJECT

VIADUCT

STOPPER BLOCK DETAILS NO. 1

DESIGN	BY A. KALIDINDI	CHECKED S. NAGI	PREPARED FOR THE STATE OF CALIFORNIA DEPARTMENT OF TRANSPORTATION	ELI M. ARAMOUNI, PROJECT MANAGER
DETAILS	BY K. DRESBACH	CHECKED S. NAGI		
QUANTITIES	BY C.C. MYERS	CHECKED C.C. MYERS		

DESIGN OVERSIGHT

SIGN OFF DATE

SHEET 24 OF 27

BRIDGE NO. 34-0006 (TEMP)
KILOMETER POST 12.6
CU EA 0120R4

DISREGARD PRINTS BEARING EARLIER REVISION DATES

REVISION DATES (PRELIMINARY STAGE ONLY): 10-03-06, 10-05-06

SHEET 14H OF 112

DESIGN DETAIL SHEET (METRIC) (REV. 3/1/98)
09 OCT 2006 6:21:49 h:\bay bridge\viaduct\bntshrblks2.dgn

ORIGINAL SCALE IN MILLIMETERS FOR REDUCED PLANS 0 10 20 30 40 50 60 70 80 90 100

FILE => REQUEST

04	SF	80	12.6/13.2

Metric

REGISTERED CIVIL ENGINEER

PLANS APPROVAL DATE

REGISTERED PROFESSIONAL ENGINEER ELI M. ARAMOUNI No. CE 41712 Exp. 03-31-08 CIVIL STATE OF CALIFORNIA

The State of California or its officers or agents shall not be responsible for the accuracy or completeness of electronic copies of this plan sheet.

IMBSEN & ASSOCIATES INC.
9912 Business Park Dr., Suite 130
Sacramento, California 95827

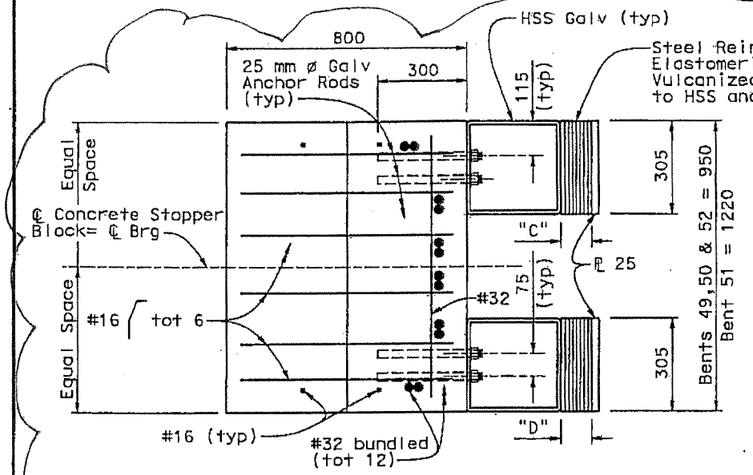

PLAN

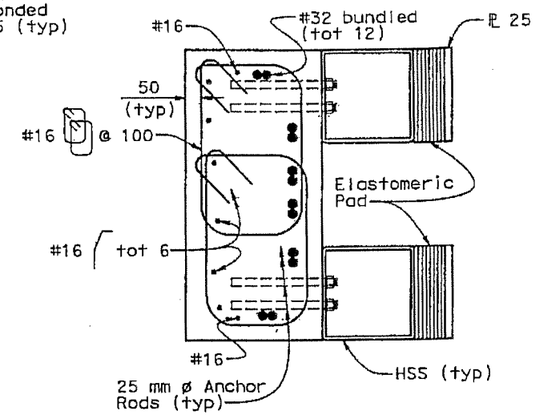

SECTION A-A
1:10

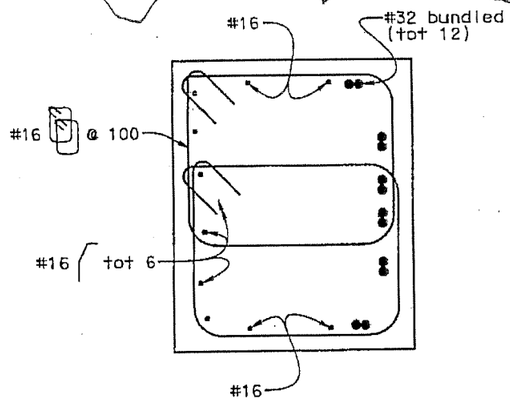

SECTION B-B
1:10

CCO #60

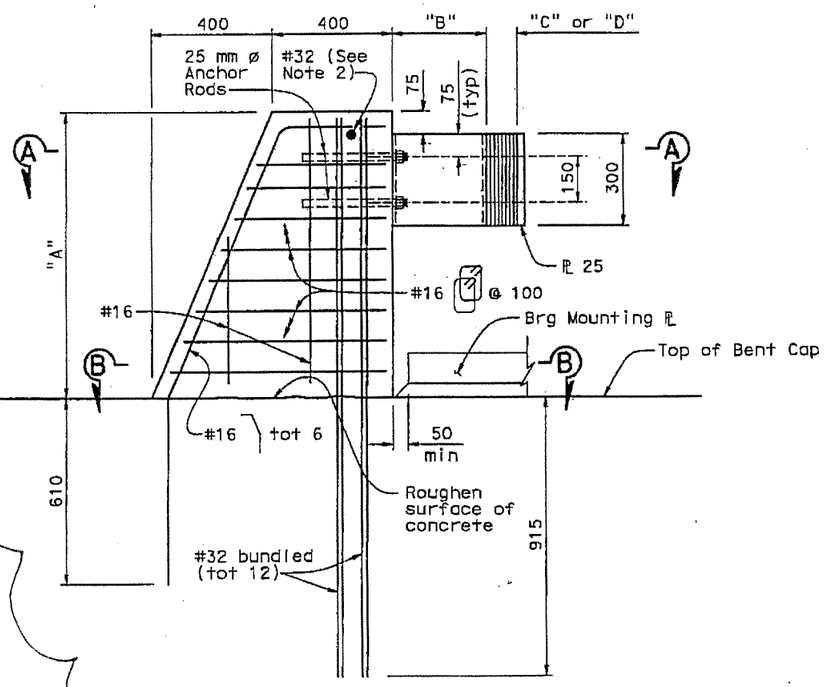

ELEVATION

CONCRETE STOPPER BLOCK
1:10

CONCRETE STOPPER BLOCK DIMENSIONS

Floor Beam #	"A" Dimension		"B" Dimension (HSS)		"C" Dimension		"D" Dimension	
	North Truss	South Truss	North Truss	South Truss	North Truss	South Truss	North Truss	South Truss
*7	860	860	305x203	305x203	80	65	65	80
*8	880	880	305x305	305x305	85	130	100	115
*15	860	860	305x203	305x203	80	70	65	85
*16	840	840	305x203	305x203	70	70	70	70
22	925	925	305x305	305x305	170	170	170	170
28	890	890	305x305	305x305	95	60	95	60

* Dimensions are based upon Bearing Shop Plans

Note:

1. For Brg Mounting ℙ details, see "Bearing Details" sheets
2. Weld to #32 bundled bars.

CONTRACT NO. 04-0120R4

CONTRACT CHANGE ORDER NO 60

SHEET 25 OF 25

FINAL SUPERSTRUCTURE RESUBMITTAL
Print date: 09 OCT 2006 Time: 16:23:48

ALL DIMENSIONS ARE IN MILLIMETERS UNLESS OTHERWISE SHOWN

SAN FRANCISCO OAKLAND BAY BRIDGE
EAST SPAN SEISMIC SAFETY PROJECT

VIADUCT

STOPPER BLOCK DETAILS NO. 2

DESIGN OVERSIGHT	DESIGN	BY A.K.	CHECKED S.N.
	DETAILS	BY A. CARDOZA	CHECKED S.N.
SIGN OFF DATE	QUANTITIES	BY C.C. MYERS	CHECKED C.C. MYERS

PREPARED FOR THE STATE OF CALIFORNIA DEPARTMENT OF TRANSPORTATION

ELI M. ARAMOUNI
PROJECT MANAGER

BRIDGE NO. 34-0006 (TEMP)
KILOMETER POST 12.6

DISREGARD PRINTS BEARING EARLIER REVISION DATES 10-09-06

REVISION DATES (PRELIMINARY STAGE ONLY)

SHEET 14J OF 112

DESIGN DETAIL SHEET (METRIC) (REV. 3/1/98)
09 OCT 2006 6:23:48 h:\bay bridge\viaduct\bntshrblks.dgn

ORIGINAL SCALE IN MILLIMETERS FOR REDUCED PLANS 0 10 20 30 40 50 60 70 80 90 100

CU
EA 0120R4
FILE => $REQUEST

STATE OF CALIFORNIA - DEPARTMENT OF TRANSPORTATION

CONTRACT CHANGE ORDER

Change Requested by: Engineer

CCO 61	Suppl. No. 0	Contract No. 04 - 0120R4	Road SF-80-12.6/13.2	FED. AID LOC.: ACBRIM-080-1(097)N

To: **CC MYERS INC**

You are directed to make the following changes from the plans and specifications or do the following described work not included in the plans and specifications for this contract. ***NOTE: This change order is not effective until approved by the Engineer.***

Description of work to be done, estimate of quantities and prices to be paid. (Segregate between additional work at contract price, agreed price and force account.) Unless otherwise stated, rates for rental of equipment cover only such time as equipment is actually used and no allowance will be made for idle time. This last percentage shown is the net accumulated increase or decrease from the original quantity in the Engineer's Estimate.

Extra Work at Force Account:

Prepare the jobsite and procure material for the Construction of Phase 1 of the West Tie-In structure in accordance with the attached plans and specifications. This work includes but is not limited to the grading of the site, construction of an access road to USCG Quarters 8, and procurement of foundation materials requiring long lead times.

Prepare and submit the necessary submittals in advance of this work to expedite the construction. This includes but is not limited to Cast-In-Drilled-Hole pile placement plan, shoring plans, soil nails, and as directed by the Department's Engineer. Perform prequalification testing for proposed concrete mix designs.

All work shall be performed in accordance with the attached plans and specifications.

For this work the Contractor shall initially be compensated at Extra Work at Force Account. Contract plan sheets for the various stages of the Phase 1 work shall be issued as developed. At such time, the Contractor shall provide a lump sum estimate for the work and a supplemental Change Order will be issued at the final negotiated lump sum minus any funds previously expended at force account.

No adjustment in contract time will be made since this work is not a controlling item.

Estimated cost of Extra Work at Force Account $400,000.00

RECEIVED
05102 FEB 12 07

Estimated Cost: **Increase** ☑ **Decrease** ☐ **$400,000.00**

By reason of this order the time of completion will be adjusted as follows: 0 days

Submitted by

Signature	Resident Engineer: MAHANTESH ANIGOL	Date 01/29/07

Approval Recommended by

Signature	Construction Engineer: JASON TOM	Date 2/23/07

Engineer Approval by

Signature	(Print name and title) JASON TOM - Chief	Date 2/23/07

We the undersigned contractor, have given careful consideration to the change proposed and agree, if this proposal is approved, that we will provide all equipment, furnish the materials, except as may otherwise be noted above, and perform all services necessary for the work above specified, and will accept as full payment therefor the prices shown above.

NOTE: If you, the contractor, do not sign acceptance of this order, your attention is directed to the requirements of the specifications as to proceeding with the ordered work and filing a written protest within the time therein specified.

Contractor Acceptance by

Signature	(Print name and title) DANIEL E. HUMICK, PRESIDENT	Date 2/14/07

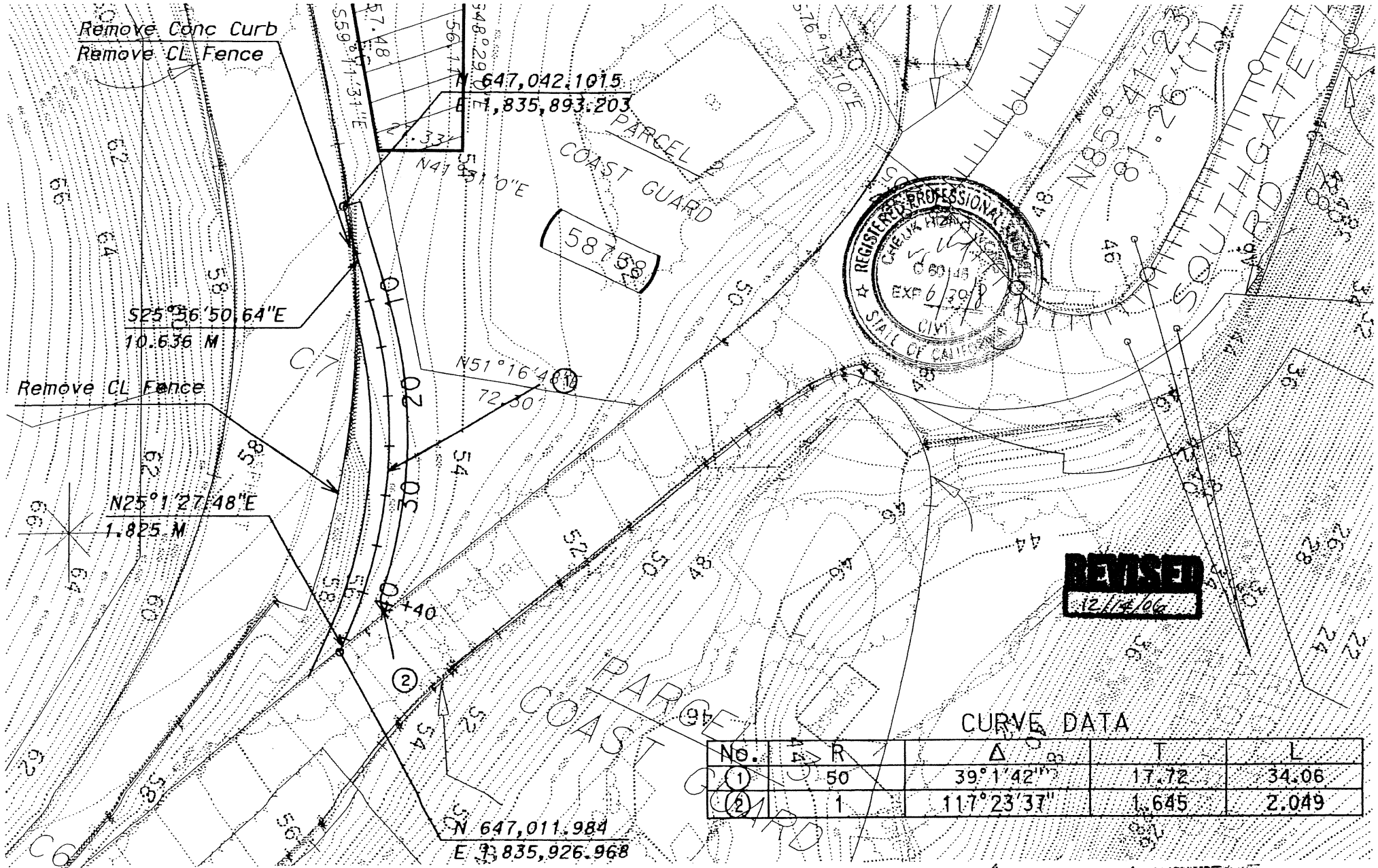

CURVE DATA

No.	R	Δ	T	L
(1)	50	39°1'42"	17.72	34.06
(2)	1	117°23'37"	1.645	2.049

04-0120R4

CONTRACT CHANGE ORDER NO. 61

SHEET 2 OF 85

ONTRACT NO. 04-0120R4

ONTRACT CHANGE ORDER NO. 61

HEET 3 OF 85

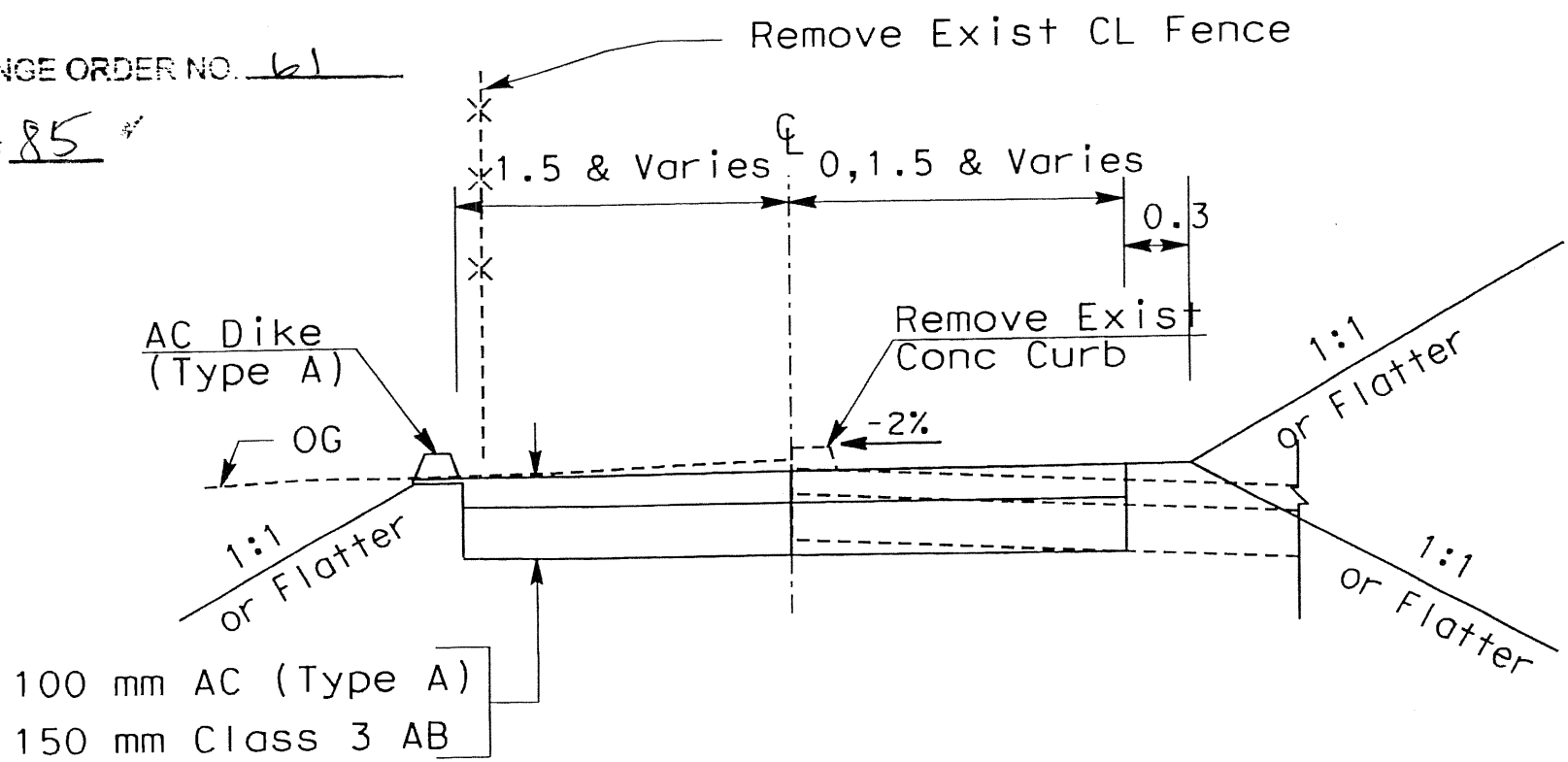

TYPICAL CROSS SECTION

NO SCALE

NOTES:

1. Location and limits of existing Conc Curb and CL Fence removal as directed by the engineer.

REGISTERED PROFESSIONAL ENGINEER
CHEUK HONG
EXP 6/30/08
CIVIL
STATE OF CALIFORNIA

X section.dgn 12/8/2006 3:29:53 PM

DIST	COUNTY	ROUTE	KILOMETER POST TOTAL PROJECT	SHEET No	TOTAL SHEETS
04	SF	80			

REGISTERED CIVIL ENGINEER

PLANS APPROVAL DATE

REGISTERED PROFESSIONAL ENGINEER — Kwong H. Chang — No. C 049590 — Exp. 09-30-08 — CIVIL — STATE OF CALIFORNIA

PARSONS BRINCKERHOFF QUADE & DOUGLAS, INC.
303 Second St., Suite 700N
San Francisco, CA 94107-1317

The State of California or its officers or agents shall not be responsible for the accuracy or completeness of electronic copies of this plan sheet.

Caltrans now has a web site! To get to the web site, go to http://www.dot.ca.gov

Caltrans Metric

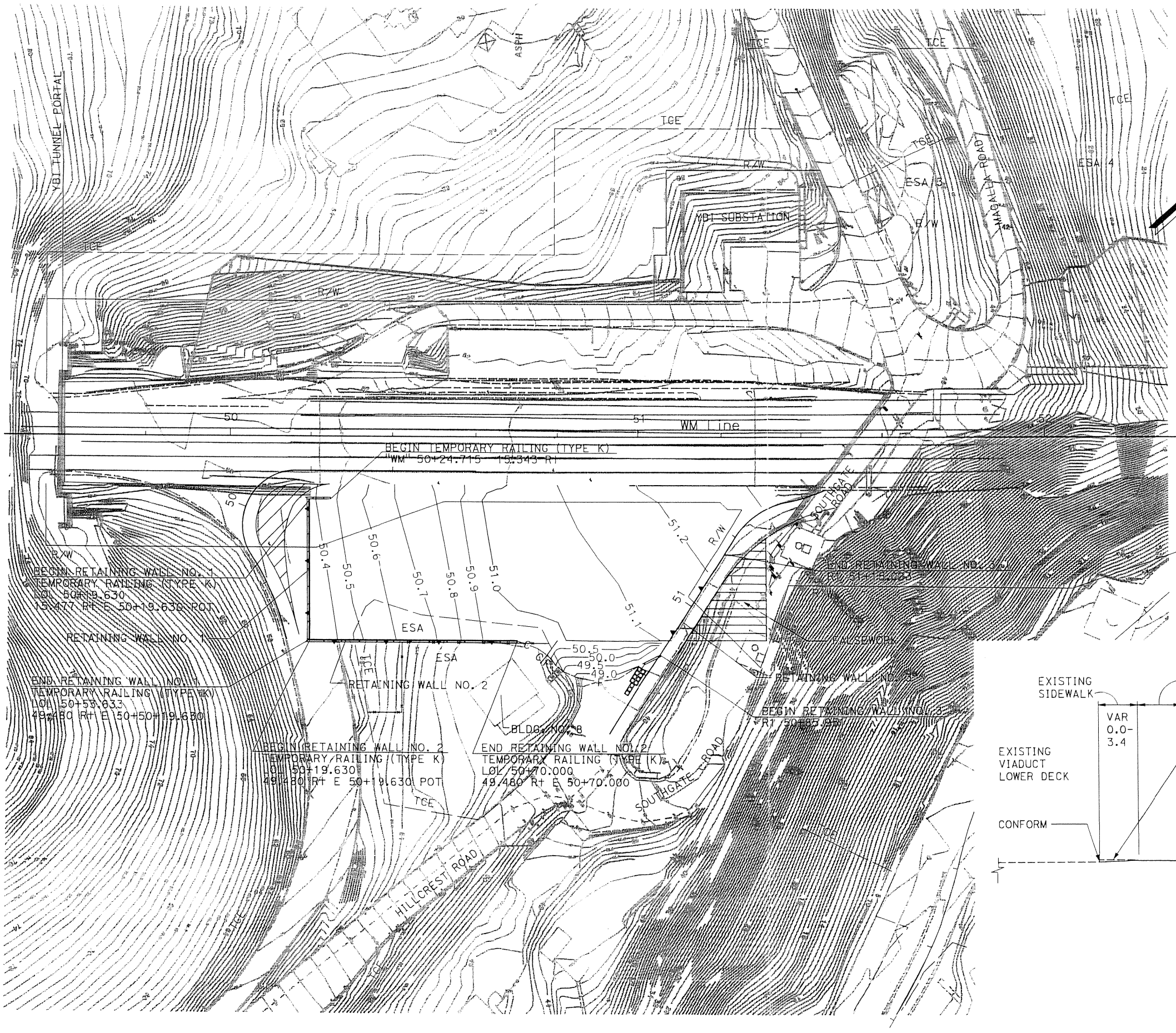

THIS PLAN ACCURATE FOR CONTOUR GRADING ONLY

LEGEND

FALSEWORK OVER SOUTHGATE ROAD

JAN 24 2007

CONTRACT NO. 04-0120R4

CONTRACT CHANGE ORDER NO. 61

SHEET 4 OF 85

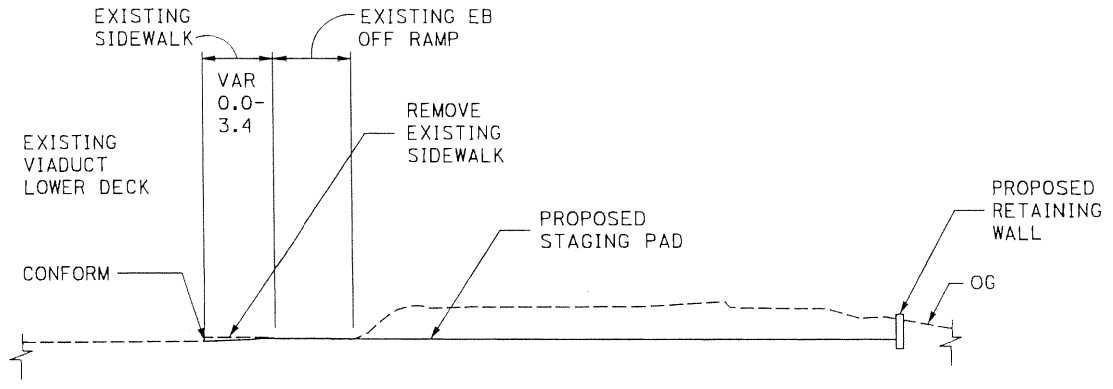

TYPICAL SECTION
STA. 50+70
NO SCALE

CONTOUR GRADING
SCALE: 1:500

G-1

DESIGN OVERSIGHT	CALCULATED/ DESIGNED BY	DRAWN BY	CHECKED BY
C. Hong Wong			

DATE	REVISED BY	DATE REVISED

STATE OF CALIFORNIA - DEPARTMENT OF TRANSPORTATION
Caltrans

LAST REVISION 00-00-00 | DATE PLOTTED => 1/12/2007 | TIME PLOTTED => 1:57:24 PM

RELATIVE BORDER SCALE IS IN MILLIMETERS 0 20 40 60 80

DGN FILE => T:\13103\Replace YBI viaduct\Sheet Files\ha001.dgn
USERNAME => reyesl

CU | EA

CONTRACT NO. 04-0120R4

The special provisions contained herein have been prepared by or under the direction of the following Registered Persons.

STRUCTURES

Milind Desai

REGISTERED CIVIL ENGINEER

CONTRACT NO. 04-0120R4

CONTRACT CHANGE ORDER NO. 61

SHEET 5 OF 85

CALTRANS DIVISION OF STRUCTURES

LOCATION 04-SF-80

EA 0120P1

CU 04

SAN FRANCISCO – OAKLAND BAY BRIDGE
NEW EAST BAY SEGMENT
(BRIDGE NO. 34-0006)

CCO FOR YBI VIADUCT REPLACEMENT/ WEST TIE-IN
STAGING AREA RETAINING WALL

SPECIAL PROVISIONS
VOLUME 1 OF 1

FINAL SUBMITTAL

January 19, 2007

T.Y. LIN INTERNATIONAL
MOFFATT & NICHOL
a joint venture

CONTRACT NO. 04-0120R4

CONTRACT CHANGE ORDER NO. 61

SHEET 6 OF 85

SFOBB – YERBA BUENA ISLAND VIADUCT REPLACEMENT/WEST TIE-IN STAGING AREA RETAINING WALL

STRUCTURE ITEM LIST

Item No.	Item Code		Item Name	Unity of Measure
1	157550		BRIDGE REMOVAL (PORTION)	LS
2	192037	F	STRUCTURE EXCAVATION (RETAINING WALL)	M3
3	192055	F	STRUCTURE EXCAVATION (SOIL NAIL WALL)	M3
4	193013	F	STRUCTURE BACKFILL (RETAINING WALL)	M3
5	193028	F	STRUCTURE BACKFILL (SOIL NAIL WALL)	M3
6	193118A	F	CONCRETE BACKFILL (SOLDIER PILE)	M3
7	197060	P-S	SOIL NAIL ASSEMBLY	M
8	490306	P-S	FURNISH & INSTALL SOLDIER PILES	M
9	490652	S	610 MM DRILLED HOLE (SOLDIER PILE)	M
10	510050	F	STRUCTURAL CONCRETE (BRIDGE)	M3
11	510060	F	STRUCTURAL CONCRETE (RETAINING WALL)	M3
12	511106	F	DRILL AND BOND DOWEL	M
13	511109	S-F	DRILL AND BOND DOWEL (EPOXY CARTRIDGE)	EA
14	520102	P-S-F	BAR REINFORCING STEEL (BRIDGE)	KG
15	520103	P-S-F	BAR REINFORCING STEEL (RETAINING WALL)	KG
16	530100	S-F	SHORTCRETE	M3
17	575004	F	TIMBER LAGGING	M3

CONTRACT NO. 04-012024

CONTRACT CHANGE ORDER NO. 61

SHEET 7 OF 85

8-2. PORTLAND CEMENT CONCRETE

Portland cement concrete shall conform to the provisions in Section 90, "Portland Cement Concrete," of the Standard Specifications and these special provisions.

Cementitious material to be used in Portland cement concrete shall conform to the provisions for cement and mineral admixtures in Section 90-2, "Materials," of the Standard Specifications, and shall be a combination of "Type II Modified" Portland cement and mineral admixture.

References to Section 90-2.01, "Portland Cement," of the Standard Specifications shall mean Section 90-2.01, "Cement," of the Standard Specifications.

Mineral admixture shall be combined with cement in conformance with the provisions in Section 90-4.08, "Required Use of Mineral Admixtures," of the Standard Specifications for the concrete materials specified in Section 56-2, "Roadside Signs," of the Standard Specifications.

The requirements of Section 90-4.08, "Required Use of Mineral Admixture," of the Standard Specifications shall not apply to Section 19-3.025C, "Soil Cement Bedding," of the Standard Specifications.

The Department maintains a list of sources of fine and coarse aggregate that have been approved for use with a reduced amount of mineral admixture in the total amount of cementitious material to be used. A source of aggregate will be considered for addition to the approved list if the producer of the aggregate submits to the Transportation Laboratory certified test results from a qualified testing laboratory that verify the aggregate complies with the requirements. Prior to starting the testing, the aggregate test shall be registered with the Department. A registration number can be obtained by calling (916) 227-7228. The registration number shall be used as the identification for the aggregate sample in correspondence with the Department. Upon request, a split of the tested sample shall be provided to the Department. Approval of aggregate will depend upon compliance with the specifications, based on the certified test results submitted, together with any replicate testing the Department may elect to perform. Approval will expire 3 years from the date the most recent registered and evaluated sample was collected from the aggregate source.

Qualified testing laboratories shall conform to the following requirements:

A. Laboratories performing ASTM Designation: C 1293 shall participate in the Cement and Concrete Reference Laboratory (CCRL) Concrete Proficiency Sample Program and shall have received a score of 3 or better on all tests of the previous 2 sets of concrete samples.
B. Laboratories performing ASTM Designation: C 1260 shall participate in the Cement and Concrete Reference Laboratory (CCRL) Pozzolan Proficiency Sample Program and shall have received a score of 3 or better on the shrinkage and soundness tests of the previous 2 sets of pozzolan samples.

Aggregates on the list shall conform to one of the following requirements:

A. When the aggregate is tested in conformance with the requirements in California Test 554 and ASTM Designation: C 1293, the average expansion at one year shall be less than or equal to 0.040 percent; or
B. When the aggregate is tested in conformance with the requirements in California Test 554 and ASTM Designation: C 1260, the average of the expansion at 16 days shall be less than or equal to 0.15 percent.

The amounts of cement and mineral admixture used in cementitious material shall be sufficient to satisfy the minimum cementitious material content requirements specified in Section 90-1.01, "Description," or Section 90-4.05, "Optional Use of Chemical Admixtures," of the Standard Specifications and shall conform to the following:

A. The minimum amount of cement shall not be less than 75 percent by mass of the specified minimum cementitious material content.
B. The minimum amount of mineral admixture to be combined with cement shall be determined using one of the following criteria:
   1. When the calcium oxide content of a mineral admixture is equal to or less than 2 percent by mass, the amount of mineral admixture shall not be less than 15 percent by mass of the total amount of cementitious material to be used in the mix.
   2. When the calcium oxide content of a mineral admixture is greater than 2 percent by mass, and any of the aggregates used are not listed on the approved list as specified in these special provisions, then the amount of mineral admixture shall not be less than 25 percent by mass of the total amount of cementitious material to be used in the mix.
   3. When the calcium oxide content of a mineral admixture is greater than 2 percent by mass and the fine and coarse aggregates are listed on the approved list as specified in these special provisions, then the amount of mineral admixture shall not be less than 15 percent by mass of the total amount of cementitious material to be used in the mix.
   4. When a mineral admixture that conforms to the provisions for silica fume in Section 90-2.04, "Admixture Materials," of the Standard Specifications is used, the amount of mineral admixture shall not be less than 10 percent by mass of the total amount of cementitious material to be used in the mix.
   5. When a mineral admixture that conforms to the provisions for silica fume in Section 90-2.04, "Admixture Materials," of the Standard Specifications is used and the fine and coarse aggregates are listed on the approved list as specified in these special provisions, then the amount of mineral admixture shall not be less than 7 percent by mass of the total amount of cementitious material to be used in the mix.
C. The total amount of mineral admixture shall not exceed 35 percent by mass of the total amount of cementitious material to be used in the mix. Where Section 90-1.01, "Description," of the Standard Specifications specifies a maximum cementitious content in kilograms per cubic meter, the total mass of cement and mineral admixture per cubic meter shall not exceed the specified maximum cementitious material content.

CONTRACT NO. 04-0120R4 CONTRACT CHANGE ORDER NO. 61 SHEET 9 OF 85

8-1.__ ENGINEERING FABRICS

Engineering fabrics shall conform to the provisions in Section 88, "Engineering Fabrics," of the Standard Specifications and these special provisions.

Filter fabric for this project shall be ultraviolet (UV) ray protected.

10-1.__ EXISTING HIGHWAY FACILITIES

The work performed in connection with various existing highway facilities shall conform to the provisions in Section 15, "Existing Highway Facilities," of the Standard Specifications and these special provisions.

Electronic copies of plans of the existing bridges may be requested by fax from the Office of Structure Maintenance and Investigations, 1801 30th Street, Sacramento, CA, Fax (916) 227-8357.

Plans of the existing bridges available to the Contractor are electronic reproductions of the original contract plans with significant changes noted and working drawings and do not necessarily show normal construction tolerances and variances. Where dimensions of new construction required by this contract are dependent on the dimensions of the existing bridges, the Contractor shall verify the controlling field dimensions and shall be responsible for adjusting dimensions of the work to fit existing conditions.

BRIDGE REMOVAL (PORTION)

Removing bridges or portions of bridges shall conform to the provisions in Section 15-4, "Bridge Removal," of the Standard Specifications and these special provisions.

This work includes removing portions of the existing Route 80 concrete viaduct. Components to be removed include portion of concrete barriers, metal railing, concrete deck, abutment, retaining wall and other miscellaneous items shown on the plans.

Removed materials that are not to be salvaged or used in the reconstruction shall become the property of the Contractor and shall be disposed of in conformance with the provisions in Section 7-1.13, "Disposal of Material Outside the Highway Right of Way," of the Standard Specifications.

The Contractor shall submit a complete bridge removal plan to the Engineer for each bridge listed above, detailing procedures, sequences, and all features required to perform the removal in a safe and controlled manner.

The bridge removal plan shall include, but not be limited to the following:

A. The removal sequence, including staging of removal operations.
B. Equipment locations on the structure during removal operations.
C. Details, locations, and types of protective covers to be used.
D. Details and measures for preventing material, equipment, and debris from falling onto public traffic.

The bridge removal plan shall conform to the provisions in Section 5-1.02, "Plans and Working Drawings," of the Standard Specifications. The number of sets of drawings, design calculations, and the time for reviewing bridge removal plans shall be the same as specified for falsework working drawings in Section 51-1.06A, "Falsework Design and Drawings," of the Standard Specifications.

Where bridge removal is done adjacent to prestress anchorage, care shall be used to ensure the prestress anchorage is not damaged.

Full compensation for patching cut rebar with epoxy grout shall be considered as included in the contract lump sum price paid for bridge removal (portion), and no additional compensation will be allowed therefor.

10-1.__ EARTHWORK

Earthwork shall conform to the provisions in Section 19, "Earthwork," of the Standard Specifications and these special provisions.

Surplus excavated material not designated or determined to contain aerially deposited lead shall become the property of the Contractor and shall be disposed of in conformance with the provisions in Section 7-1.13, "Disposal of Material Outside the Highway Right of Way," of the Standard Specifications.

Reinforcement or metal attached to reinforced concrete rubble placed in embankments shall not protrude above the grading plane. Prior to placement within 0.6-m below the grading plane

CONTRACT OR PURCHASE ORDER NO. 6-4-0120R4
SHEET 10 OF 85

of embankments, reinforcement or metal shall be trimmed to no greater than 20 mm from the face of reinforced concrete rubble. Full compensation for trimming reinforcement or metal shall be considered as included in the contract prices paid per cubic meter for the types of excavation shown in the Engineer's estimate, or the contract prices paid for furnishing and placing imported borrow or embankment material, as the case may be, and no additional compensation will be allowed therefor.

SOLDIER PILE WALL EARTHWORK

General

The Contractor shall submit to the Engineer working drawings, and a construction sequence for the proposed method of soldier pile wall construction for the site in conformance with the provisions in Section 5-1.02, "Plans and Working Drawings," of the Standard Specifications. The drawings shall be signed by an engineer who is registered as a Civil Engineer in the State of California. One set of the drawings and construction sequence shall be furnished to the Engineer. The working drawings and construction sequence shall include, but not be limited to, defining order of work, traffic control, method of installation of soldier piles, method of placing lagging, limits of structure excavation lifts, and type of drilling and excavation equipment to be used. The Contractor shall allow one week after complete drawings and support data are submitted for the review and approval of the proposed method of soldier pile wall construction.

In the event the Engineer fails to complete the review and approval within the time allowed, and if, in the opinion of the Engineer, completion of the work is delayed or interfered with by reason of the Engineer's delay in completing the review, the Contractor will be compensated for any resulting loss, and an extension of time will be granted, in the same manner as provided in Section 8-1.09, "Right of Way Delays," of the Standard Specifications.

Structure Excavation (Soldier Pile Wall)

Excavation and construction of the soldier pile wall shall proceed in lifts from the top down.

Care shall be taken in performing structure excavation (soldier pile wall) for placement of lagging such that a minimal void behind the lagging is required to be backfilled.

At the end of the work shift, lagging shall be in place the full height of the exposed excavation face.

Structure Backfill (Soldier Pile Wall)

Material for structure backfill behind lagging shall conform to the provisions in Section 19-3, "Structure Excavation and Backfill," of the Standard Specifications. Structure backfill behind lagging shall be compacted by hand tamping, mechanical compaction, or other means approved by the Engineer.

Structure backfill in fill areas behind the lagging shall be keyed into the existing or excavated back slope.

Concrete Backfill

Concrete backfill of the types listed in the engineer's estimate encasing the steel soldier piles below the lagging shall be Class 3 concrete conforming to the provisions in Section 90, "Portland Cement Concrete," of the Standard Specifications and these special provisions.

Pervious backfill material placed within the limits of payment for retaining walls will be measured and paid for as structure backfill (retaining wall).

CONTRACT CHANGE ORDER NO. 61

SHEET 11 OF 85

Concrete backfill encasing steel soldier piles below the lagging will be measured and paid for by the cubic meter as concrete backfill (soldier pile) in the same manner specified for structure backfill in Section 19-3.07, "Measurement," and Section 19-3.08, "Payment," of the Standard Specifications.

Full compensation for structure excavation (soldier pile wall) and structure backfill (soldier pile wall) shall be considered as included in the contract price paid per meter for furnish and install soldier piles and no additional compensation will be allowed therefore.

Full compensation for working drawings and construction sequence, and temporary supports and shoring, if required, for soldier pile wall construction shall be considered as included in the contract price paid per meter for furnish and install soldier piles and no additional compensation will be allowed therefor.

10-1. GEOCOMPOSITE DRAIN

At the soil nail walls , the geocomposite drain shall conform to the details shown on the plans and the following:

A. Attention is directed to "Engineering Fabrics" under "Materials" of these special provisions.

B. Geocomposite drain shall consist of a manufactured core not less than 6.35 mm thick nor more than 50 mm thick with one or both sides covered with a layer of filter fabric that will provide a drainage void. The drain shall produce a flow rate, through the drainage void, of at least 25 liters per minute per meter of width at a hydraulic gradient of 1.0 and a minimum externally applied pressure of 239 kPa.

C. A Certificate of Compliance conforming to the provisions in Section 6-1.07, "Certificates of Compliance," of the Standard Specifications shall be furnished for the geocomposite drain certifying that the drain produces the required flow rate and complies with these special provisions. The Certificate of Compliance shall be accompanied by a flow capability graph for the geocomposite drain showing flow rates for externally applied pressures and hydraulic gradients. The flow capability graph shall be stamped with the verification of an independent testing laboratory.

D. Filter fabric for the geocomposite drain shall conform to the provisions for fabric for underdrains in Section 88, "Engineering Fabrics," of the Standard Specifications.

E. The manufactured core shall be either a preformed grid of embossed plastic, a mat of random shapes of plastic fibers, a drainage net consisting of a uniform pattern of polymeric strands forming 2 sets of continuous flow channels, or a system of plastic pillars and interconnections forming a semirigid mat.

F. The core material and filter fabric shall be capable of maintaining the drainage void for the entire height of geocomposite drain. Filter fabric shall be integrally bonded to the side of the core material with the drainage void. Core material manufactured from impermeable plastic sheeting having nonconnecting corrugations shall be placed with the corrugations approximately perpendicular to the drainage collection system.

G. The geocomposite drain shall be installed with the drainage void and the filter fabric facing the embankment. The fabric facing the embankment side shall overlap a minimum of 75 mm at all joints and wrap around the exterior edges a minimum of 75 mm beyond the exterior edge. If additional fabric is needed to provide overlap at joints and wrap-around at edges, the added fabric shall overlap the fabric on the geocomposite drain at least 150 mm and be attached thereto.

CONTRACT NO. 04-0120K4
CONTRACT CHANGE ORDER NO. 1
SHEET 12 OF 85

H. Should the fabric on the geocomposite drain be torn or punctured, the damaged section shall be replaced completely or repaired by placing a piece of fabric that is large enough to cover the damaged area and provide a minimum 150-mm overlap.
I. Plastic pipe shall conform to the provisions for edge drain pipe and edge drain outlets in Section 68-3, "Edge Drains," of the Standard Specifications.

MEASUREMENT AND PAYMENT

Full compensation for furnishing and installing the geocomposite drainage systems behind the soil nail walls shall be considered to be included in the contract price per cubic meter for the structural concrete (retaining wall) and no separate or additional payment will be made therefor.

10-1.__ SOIL NAIL WALL EARTHWORK

Soil nail wall earthwork, consisting of excavating for soil nail wall construction and backfilling around completed soil nail walls, shall conform to the provisions in Section 19-3, "Structure Excavation and Backfill," of the Standard Specifications and these special provisions.

Working Drawings

The Contractor shall submit a complete working drawing submittal for earthwork for each soil nail wall to the Engineer in conformance with the provisions in Section 5-1.02, "Plans and Working Drawings," of the Standard Specifications. Working drawings for soil nail wall earthwork shall be 559 mm by 864 mm in size. For initial review, 5 sets of drawings shall be submitted. After review, between 6 and 12 sets, as requested by the Engineer, shall be submitted for final approval and use during construction.

Working drawings for wall earthwork shall show the State assigned designations for the contract number, structure number, full name of the structure as shown on the contract plans, and District-County-Route-Kilometer Post on each drawing and calculation sheet. The Contractor's name, address, and telephone number shall be shown on the working drawings. Each sheet shall be numbered in the lower right hand corner.

The working drawings for soil nail wall earthwork shall contain all information required for the construction and quality control of the earthwork, including the following:

A. A proposed schedule and detailed construction sequence. Construction sequence shall include measures to ensure wall and slope stability during all stages of wall construction including provisions for discontinuous rows of soil nails.
B. Methods of excavation to the staged lifts indicated and types of excavation equipment.
C. Temporary shoring plans.
D. Drilling methods and equipment including proposed drill hole size and any variation of these along the alignments.
E. Information on space requirements for installation equipment.
F. A detailed construction dewatering plan addressing all elements necessary to divert, control, and dispose of surface water and ground water.

A supplement to the working drawings shall include the following:

A. Independently checked calculations for wall and slope stability during all stages of wall construction including geotechnical assessment of information provided by the Department for this contract. At the Contractor's option, the Contractor may conduct

CONTRACT NO. 04-0125R4 CONTRACT CHANGE ORDER NO. 61 SHEET 13 OF 85

additional geotechnical investigation for the purpose of developing soil nail wall earthwork working drawings.

B. Information on provisions for working in the proximity of underground facilities.

The working drawings and supplement shall be stamped and signed by an engineer who is registered as a Civil Engineer in the State of California.

The Contractor shall allow the Engineer 4 weeks to review the working drawings and supplement after a complete submittal has been received.

Should the Engineer fail to review the complete working drawing submittal within the time specified and if, in the opinion of the Engineer, the Contractor's controlling operation is delayed or interfered with by reason of the delay in reviewing the soil nail wall earthwork working drawing submittal, an extension of time commensurate with the delay in completion of the work thus caused will be granted in conformance with the provisions in Section 8-1.09, "Right of Way Delays," of the Standard Specifications.

Excavation

Care shall be taken during excavation for soil nail walls to prevent disturbing the natural foundation materials behind the face of excavation. During initial mass grading, the Contractor shall not excavate the full wall height to the wall alignment as shown on the plans, but the Contractor shall maintain a working berm of native material in front of the wall to serve as a work bench for the drill equipment. The working berm shall extend out from the wall a minimum distance of 6 m and shall be cut down from that point at the slope shown on the approved wall earthwork working drawings. The original ground beyond the wall alignment for the back or ends of the wall as shown on the plans shall not be over excavated. Any such over excavation shall be restored by the Contractor, at the Contractor's expense, using methods and materials approved in writing by the Engineer. Soil stabilization methods or temporary backing or lagging placed behind the excavation face may be required to prevent disturbing the natural foundation materials.

Excavation for walls shall be limited to that area which can be nailed and covered with shotcrete during the same work shift in which the excavation is done. Subsequent excavation shall not be made within 3 m of previously nailed and covered portions of the wall until those nailed and covered portions are structurally complete. A portion of the wall will be considered structurally complete when the soil nail assemblies have been installed, the shotcrete cover has set, specified testing has been completed for that portion of the wall, and the test results have been furnished to the Engineer.

Excavation to the final wall alignment for the full wall height shall incorporate a working berm which shall be constructed from the top down in a staged lift sequence as shown on the approved wall earthwork working drawings.

At the option of the Contractor, in addition to the working berm described above, the Contractor may maintain a stabilizing berm of undisturbed material to support the excavation face during soil nail installation. The stabilizing berm shall extend horizontally from the bottom of the shotcrete a minimum distance of 0.3-m and shall be cut down from that point at a slope as shown on the approved wall earthwork working drawings.

After soil nails are complete in place for a given lift, the stabilizing berm shall be removed during excavation to the final wall alignment. The complete excavated face shall be cleaned of all loose materials, mud, rebound, and other materials that could prevent or reduce shotcrete bond to the excavated face and soil nails.

CONTRACT NO. 04-0A4804
CONTRACT CHANGE ORDER NO. 161
SHEET 14 OF 85

Temporary backing or lagging for excavation at soil nail walls may be left in place if approved in writing by the Engineer. There shall be no voids behind temporary backing or lagging that is left in place. Fillers used to eliminate voids between the excavation face and temporary backing or lagging shall be dimensionally stable, non-deteriorating material capable of supporting the earth pressures in both water saturated and dry conditions.

Timber backing or lagging at walls which is to remain in place and is greater than 25 mm total thickness shall be pressure treated with wood preservative for soil and fresh water use in conformance with the provisions in Section 58, "Preservative Treatment of Lumber, Timber and Piling," of the Standard Specifications. Wood preservative shall be one of the following: creosote, creosote-coal tar solution, pentachlorophenol, copper naphthenate, ammonia copper arsenate, ammoniacal copper zinc arsenate, acid copper chromate, or chromated copper arsenate.

The Contractor shall remove all cobbles, boulders or portions of boulders, rubble, or debris which are encountered at the final wall alignment during wall face excavation and which protrude from the excavated face more than 50 mm into the design shotcrete thickness as shown on the plans. Such over excavation shall be backfilled with shotcrete.

The Contractor shall immediately notify the Engineer of the occurrence of raveling or local instability of the final wall face excavation due to the presence of groundwater, soil conditions, equipment vibration, or other causes.

Unstable areas shall be temporarily stabilized by means of buttressing the exposed excavation face with an earth berm or other methods approved in writing by the Engineer. Construction of the wall in unstable areas shall be suspended until remedial measures, submitted by the Contractor, and approved by the Engineer, have been taken.

The Contractor shall protect installed soil nails during excavation and subsequent operations. Any soil nails damaged during construction shall be replaced by the Contractor, at the Contractor's expense.

04-012024
CONTRACT CHANGE ORDER NO. 61
SHEET 15 OF 85

Measurement and Payment

Excavation and backfill for soil nail wall construction will be measured and paid for as structure excavation (soil nail wall) and structure backfill (soil nail wall).

Full compensation for working drawings and supplements, and for furnishing, constructing and removing shoring, working berms, and stabilizing berms, if required, for soil nail wall construction shall be considered as included in the contract price paid per cubic meter for structure excavation (soil nail wall) and no additional compensation will be allowed therefor.

Full compensation for shotcrete used to fill voids created by the removal of cobbles and boulders or other obstructions shall be considered as included in the contract price paid per cubic meter for shotcrete and no additional compensation will be allowed therefor.

10-1.__ SOIL NAIL ASSEMBLY

Soil nail assemblies and test soil nail assemblies, consisting of drilling holes in natural foundation materials, installing and grouting steel bars in drilled holes, anchorage systems, and testing of test soil nail assemblies, shall conform to the details shown on the plans, the provisions of the Standard Specifications, and these special provisions.

Attention is directed to "Soil Nail Wall Earthwork" of these special provisions.

WORKING DRAWINGS

The Contractor shall submit a complete working drawing submittal for soil nail assemblies to the Officeof Structure Design (OSD) in conformance with the provisions in Section 5-1.02,

"Plans and Working Drawings," of the Standard Specifications. All working drawings for soil nail assemblies shall be 559 mm by 864 mm in size. For initial review, 5 sets of drawings shall be submitted. After review, between 6 and 12 sets, as requested by the Engineer, shall be submitted to OSDfor final approval and use during construction.

Working drawing submittals for soil nail assemblies shall show the State assigned designations for the contract number, structure number, full name of the structure as shown on the contract plans, and District-County-Route-Kilometer post on each drawing and calculation sheet. The Contractor's name, address, and phone and FAX numbers shall also be shown on the working drawings. Each working drawing sheet shall be numbered in the lower right hand corner of the sheet.

The working drawing submittal for soil nail assemblies shall contain all information required for the construction and quality control of the soil nail wall, including the following:

A. The proposed schedule and detailed construction sequence of the installation and grouting of soil nails, application of shotcrete, and construction of cast-in-place reinforced concrete.
B. Complete details and specifications of the soil nail and test soil nail, including encapsulation materials and method of grouting the encapsulation, anchorage system, and type of packers or other appropriate devices to be used to ensure partial length grouting of test soil nails.
C. Grout mix designs and procedures involved in testing grout.
D. Grout placement procedures and equipment including minimum required cure time.
E. Details of the equipment proposed for testing soil nails, including jacking frame and appurtenant bracing, and the method and equipment for determining any displacement of the test soil nail relative to the grout during application of test loads.
F. Information on space requirements for installation equipment.
G. Drilling methods and equipment.

The working drawing submittal shall be stamped and signed by an engineer who is registered as a Civil Engineer in the State of California.

The Contractor shall allow the Engineer 4 weeks to review the soil nail working drawings after a complete submittal has been received. No soil nails shall be fabricated or installed until the Engineer has approved, in writing, the working drawing submittal for soil nail assemblies.

Should the Engineer fail to review the complete working drawing submittal within the time specified, and if, in the opinion of the Engineer, the Contractor's controlling operation is delayed or interfered with by reason of the delay in reviewing the soil nail working drawing submittal, an extension of time commensurate with the delay in completion of the work thus caused will be granted in conformance with the provisions in Section 8-1.09, "Right of Way Delays," of the Standard Specifications.

MATERIALS

The materials specified below shall be used for construction of soil nail assemblies and test soil nail assemblies.

Soil Nail

Soil nails shall conform to the provisions for bar reinforcement in Section 52, "Reinforcement," of the Standard Specifications. Grade 420 soil nails shall also conform to the

CONTRACT NO. 04-0120Z4
CONTRACT CHANGE ORDER NO. 61
SHEET 16 OF 85

requirements in ASTM Designation: A 615/A 615M or A706/A706M. The soil nail shall be an epoxy coated reinforcing bar partially encapsulated in a grouted corrugated plastic sheathing. The bar shall be centered in the sheathing and the space between the sheathing and the bar shall be filled with grout. The epoxy coating shall have a minimum thickness of 305 μm.

Soil nail assemblies shall be lengthened or additional soil nail assemblies shall be installed when ordered by the Engineer. The lengthening or addition of soil nail assemblies, when ordered by the Engineer, will be paid for as extra work as provided in Section 4-1.03D, "Extra Work," of the Standard Specifications.

Soil nails shall have a minimum length of 150 mm of thread on the anchorage end. Threading may be continuous spiral deformed ribbing provided by the bar deformations or may be cut into a reinforcing bar. If threads are cut into a reinforcing bar, the bar size shall be the next larger bar designation number from that shown on the plans and coarse threads shall be used. The epoxy coating at the anchorage end of epoxy coated bars may be omitted for a maximum length of 150 mm. Metal surfaces of assembled splices of epoxy coated bars shall be epoxy coated.

Corrugated plastic sheathing shall be either polyvinyl chloride (PVC) or high density polyethylene (HDPE). The minimum sheathing wall thickness shall be 1.0 mm.

HDPE shall have a density between 0.940 and 0.960-g/cm^3 when measured in conformance with the requirements in ASTM Designation: D 792, A-2.

The sheathing shall have sufficient strength to prevent damage during construction operations and shall be watertight, chemically stable without embrittlement or softening, and nonreactive with concrete.

Splicing of soil nails shall be made only at the locations shown on the plans or at ends of soil nails which the Engineer has ordered to be lengthened.

Test Soil Nail

Test soil nails shall conform to the provisions for bar reinforcement in Section 52, "Reinforcement," of the Standard Specifications, and shall be of a size and grade determined by the Contractor.

Test soil nail assemblies shall be lengthened or additional test soil nail assemblies shall be installed when ordered by the Engineer. The lengthening or addition of test soil nail assemblies, when ordered by the Engineer, will be paid for as extra work as provided in Section 4-1.03D, "Extra Work," of the Standard Specifications.

Test soil nails need not be epoxy coated or encapsulated in grouted plastic sheathing.

Splicing of test soil nails shall be made only at locations outside of the bonded length.

Anchorage System

Anchorage for soil nails shall conform to the details shown on the plans and the provisions in Section 75-1.02, "Miscellaneous Iron and Steel," of the Standard Specifications, except that nuts, washers, wedges, and bearing plates to be fully encased in concrete, grout, or shotcrete need not be galvanized. Concrete anchors on the bearing plates shall conform to the provisions for stud connectors in Section 55-2, "Materials," of the Standard Specifications.

The ultimate strength of the soil nail anchorage shall be at least the value shown below for the size of the soil nail bar shown on the plans.

CONTRACT CHANGE ORDER NO. 04-012084 Sal

SHEET 17 OF 85

BAR SIZE	ANCHORAGE ULTIMATE STRENGTH (kilonewtons)	
	Grade 420	Grade 520
No. 16	123	137
No. 19	178	198
No. 22	240	267
No. 25	314	350
No. 29	401	446
No. 32	508	565

Grout

Grout shall conform to the provisions in Section 50-1.09, "Bonding and Grouting," of the Standard Specifications. California Test 541 will not be required nor will the grout be required to pass through a screen with a 1.80-mm maximum clear opening prior to being introduced into the grout pump. Fine aggregate may be added to the grout mixture of portland cement and water in drilled holes 150 mm or greater in diameter, but only to the extent that the cement content of the grout is not less than 600 kilograms per cubic meter of grout. Fine aggregate, if used, shall conform to the provisions in Section 90-2, "Materials," and Section 90-3, "Aggregate Gradings," of the Standard Specifications. Grout with fine aggregate shall have a nominal penetration equal to or greater than 90 mm when measured in conformance with California Test 533, and shall have an air content of equal to or less than 2 percent when measured in conformance with California Test 504. Air entraining admixtures shall not be used for grout with fine aggregate.

The consistency of grout with fine aggregate shall be verified prior to use by producing a batch to be tested. The test batch shall be produced and delivered to the project under conditions and in time periods similar to those expected during the placement of grout in the soil nails. Grout for the test batch shall be placed in an excavated hole or suitable container of adequate size to allow testing in conformance with California Test 533. The test batch shall demonstrate that the proposed grout mix achieves the specified nominal penetration. Upon completion of the testing, the grout shall be disposed of in conformance with the provisions in Section 7-1.13, "Disposal of Material Outside the Highway Right of Way," of the Standard Specifications.

CONSTRUCTION

Soil nails shall be installed in drilled holes in an expeditious manner so that caving or deterioration of the drilled hole does not occur. No portion of the drilled hole shall be left open for more than 60 minutes prior to soil nail placement and grouting unless otherwise approved by the Engineer.

Difficult soil nail assembly construction is anticipated due to caving soils,rock, cobbles and boulders, subsurface concrete debris.

Drilling

Drilling equipment shall be designed to drill straight and clean holes. The drilling method and the size and capability of the drilling equipment shall be as approved in the working drawings. Drill rigs shall have the capability of anchorage installation and grout placement through the use of drill casing or hollow-stem augers.

At locations where caving conditions are anticipated, sufficient casing and auger lengths shall be available on site to maintain uninterrupted installation of anchors.

CONTRACT NO. [illegible]
CONTRACT CHANGE ORDER NO. 61
SHEET 18 OF 85

Attention is directed to rock subsurface foundation material at the soil nail wall site. At locations where hard drilling conditions such as rock, cobbles, boulders, or obstructions are anticipated, a down hole pneumatic hammer drill rig and drill bit shall be available on site to drill holes for soil nail assemblies.

Drilled holes for walls shall not extend beyond the right-of-way or easement limits as shown on the plans or as specified in these special provisions.

Holes shall be drilled in the natural foundation materials. Holes for test soil nail assemblies shall be of the same diameter as those for the production soil nail assemblies they represent.

Holes shall be cleaned to remove material resulting from the drilling operations and to remove any other material that would impair the strength of the soil nail assemblies or test soil nail assemblies. Foreign material dislodged or drawn into the holes during construction of the assemblies shall be removed. Water for cleaning holes shall not be used, unless full hole length hollow-stem augers or casing is maintained in the same hole during cleaning and soil nail assembly installation. Soil nail assemblies and test soil nail assemblies shall not be installed in the drilled holes until the holes have been inspected by the Engineer.

Installing Soil Nails and Test Soil Nails

Soil nails and test soil nails shall be installed in the drilled holes using centralizers. Centralizers shall adequately support the bar in the center of the drilled hole and shall be spaced at a maximum of 1.5 m on center along the length of the bar, and 0.5-m from the end of the bar.

Where the soil nail cannot be completely inserted, the Contractor shall remove the bar and clean or redrill the hole to permit unobstructed installation. Partially installed bars shall not be driven or forced into the drilled hole and will be rejected. When open-hole drilling methods are being used, the Contractor shall have hole cleaning tools on-site suitable for cleaning drilled holes along their full length just prior to bar insertion and grouting.

Grouting

The length of drilled hole shall be verified and recorded by the Contractor before grouting.

Grout shall be injected at the low end of the drilled hole and shall fill the drilled hole with a dense grout free of voids or inclusion of foreign material. Cold joints shall not be used in grout placement. Soil nails shall be grouted full length.

Only the bonded length of test soil nails shall be initially grouted. Initial grouting shall be confined to the bonded length by packers or other approved devices. For test soil nails, grouting of the remainder of the drilled hole shall not be done until pullout tests have been completed and approved by the Engineer.

After placing the grout for soil nails and test soil nails, they shall remain undisturbed for the cure time stated in the approved soil nail working drawings.

Securing Soil Nails

Any remaining void at the exterior end of the drilled hole for a soil nail assembly shall be filled with shotcrete and the soil nail secured at the face of the shotcrete. The steel bearing plate shall be seated with full bearing on the shotcrete surface and the nut for the soil nail shall be hand tightened before the initial set of the shotcrete. The nut shall be made wrench tight after the shotcrete has set for 24 hours, unless a shorter time is approved by the Engineer.

Securing Test Soil Nails

Testing shall be performed against a temporary bearing yoke which bears directly on the

CONTRACT CHANGE ORDER NO. 61
04-0120R4
SHEET 19 OF 85

shotcrete facing. Test loads transmitted through the temporary bearing yoke shall not fracture the shotcrete or cause displacement or sloughing of the soil surrounding the drilled hole. No part of the yoke shall bear within 150 mm of the edge of blockout.

Test soil nails shall be removed to behind the front face of the shotcrete after testing has been completed. The remaining length of void in the drilled hole shall be grouted and the blockout in the shotcrete facing filled with either grout or shotcrete.

TESTING

Test soil nail assemblies shall be pullout tested by the Contractor in the presence of the Engineer. A pullout test shall consist of incrementally loading the assembly until either the pullout test load has been held for one minute or the total measured movement of the soil nail exceeds 50 mm, at which point the load shall be recorded as part of the test data and submitted to the Engineer at the conclusion of each test.

The Contractor shall monitor and record total movement of the test soil nail relative to the grout during application of the test load.

Applied test loads shall be determined by using either a calibrated pressure gage or a load cell. Movements of the end of the soil nail, relative to an independent fixed reference point, shall be measured and recorded to the nearest 25 μm at each increment of load, including the ending alignment load, during the load tests.

The pressure gage shall have an accurately reading dial at least 150 mm in diameter. Each jack and its gage shall be calibrated as a unit with the cylinder extension in the approximate position that it will have at final jacking force, and shall be accompanied by a certified calibration chart. Each jack and pressure gage assembly shall be calibrated in conformance with Section 50-1.08, "Prestressing," of the Standard Specifications. The load cell shall be calibrated and shall be provided with an indicator capable of measuring the test load in the soil nail. The range of the load cell shall be such that the lower 10 percent of the manufacturer's rated capacity will not be used in determining the jacking force.

The test load may be verified by State forces with either State-furnished load cells or pressure cells, or with State-furnished Vibra-Tension equipment operated in conformance with the requirements of California Test 677. The Contractor shall provide sufficient labor, equipment, and material to install and support such testing equipment at the soil nails and to remove the testing equipment after the testing is complete, as ordered by the Engineer.

The pullout test procedures shall conform to the following:

A. The pullout test shall be conducted by measuring and recording the test load applied to the test soil nail and the test soil nail end movement at each load listed in the following loading schedule.

PULLOUT TEST LOADING SCHEDULE

AL
0.20M
0.30M
0.40M
0.50M
0.60M
0.70M

CONTRACT NO. 04-012089
CONTRACT CHANGE ORDER NO. 61
SHEET 26 OF 85

0.80M
0.90M
1.00M (PULLOUT TEST LOAD)
AL

(M = MAXIMUM TEST LOAD (kN) = $0.0141\sigma_b D$)
Where σ_b=Ultimate bond stress between grout and drilled hole as shown on the plans, in kPa; and D=actual drilled hole diameter, in millimeters.
(AL = ALIGNMENT LOAD = 0.1M)

B. Each increment of load shall be applied in less than one minute and held for at least one minute but not more than 2 minutes, except that the load equal to 0.70M shall be held for 10 minutes. During the 10-minute load hold, the movement of the end of the soil nail shall be measured at 1, 2, 3, 4, 5, 6, and 10 minutes. The observation period for the 10-minute load hold shall start when the pump begins to apply the increment of load from 0.60M to 0.70M. If the creep movement measured between one minute and 10 minutes at 0.70M is less than one mm, the load shall continue to be increased incrementally to 1.00M, then reduced to the ending alignment load. The test soil nail assembly shall be considered acceptable if 1) the creep movement measured between one minute and 10 minutes is less than one mm, 2) the total measured movement is greater than 80 percent of the theoretical elastic elongation of the test nail unbonded length at the 1.0M load, and 3) the total measured movement is less than 50 mm.
C. If the load of 0.70M cannot be maintained for 10 minutes with one mm or less creep movement, the 0.70M load shall be maintained for an additional 50 minutes. Total movement shall be measured at 15, 20, 25, 30, 45, and 60 minutes. If the test load is held for 60 minutes, a creep curve showing the creep movement between 10 minutes and 60 minutes shall be plotted as a function of the logarithm of time. If the creep curve plotted from the movement data indicates a creep rate of less than 2.0 mm for the last log cycle of time, the load shall continue to be increased incrementally to 1.00M, then reduced to the ending alignment load. The test soil nail assembly shall be considered acceptable if 1) the creep curve plotted from the movement data indicates a creep rate of less than 2.0 mm for the last log cycle of time, 2) the total measured movement is greater than 80 percent of the theoretical elastic elongation of the test nail unbonded length at the 1.0M load, and 3) the total measured movement is less than 50 mm.
D. The soil nail shall be unloaded only after completion of the test.

CONTRACT NO. 04-0120R4
CONTRACT CHANGE ORDER NO. 61
SHEET 21 OF 85

Test soil nails that fail to meet acceptance criteria shall be extracted when requested by the Engineer. Full compensation for extracting test soil nails shall be considered as included in the contract price paid per meter for soil nail assembly, and no separate payment will be made therefor.

The Contractor shall furnish to the Engineer complete test results for each soil nail assembly tested. Data for each test shall list key personnel, test loading equipment, test soil nail location, hole diameter and depth, bond length, type of soil, method of drilling, and amount of ground water encountered within the bond length. Test data shall also include the dates and times of drilling, test soil nail installation, grouting, and testing. The test load and amount of displacement shall be included in the test data when any displacement of the test soil nail relative to the grout occurs during application of the test load.

MEASUREMENT

Soil nail assembly and test soil nail assembly will be measured and paid for by the meter. The length to be paid for will be the length of soil nail assembly or test soil nail assembly measured along the bar centerline from the back face of shotcrete to the tip end shown on the plans or ordered in writing by the Engineer.

PAYMENT

The contract price paid per meter for soil nail assembly shall include full compensation for furnishing all labor, materials, tools, equipment, and incidentals, and for doing all the work involved in constructing the soil nail assemblies, complete in place, as shown on the plans, as specified in the Standard Specifications and these special provisions, and as directed by the Engineer.

Test soil nail assemblies will be paid for as soil nail assembly.

Full compensation for testing of the test soil nail assemblies shown on the plans shall be considered as included in the contract price paid per meter for soil nail assembly, and no separate payment will be made therefor.

Full compensation for repair of all damage to existing structures, restoration of grade in subsided areas, and all other damage done by drilling shall be considered as included in the contract price paid per meter for soil nail assembly, and no additional compensation will be allowed therefor.

Full compensation for furnishing, installing, and removing casing shall be considered as included in the contract price paid per meter for soil nail assembly, and no additional compensation will be allowed therefor.

Full compensation for drilling in the rock subsurface foundation material shall be considered as included in the contract price paid per meter for soil nail assembly, and no additional compensation will be allowed therefore.

The quantities of trial batch grout will not be included in any contract item of work, and full compensation for furnishing, producing, and disposing of trial batches shall be considered as included in the contract price paid per meter for soil nail assembly, and no additional compensation will be allowed therefor.

10-1.__ PILING

GENERAL

Piling shall conform to the provisions in Section 49, "Piling," of the Standard Specifications, and these special provisions.

Unless otherwise specified, welding of any work performed in conformance with the provisions in Section 49, "Piling," of the Standard Specifications, shall be in conformance with the requirements in AWS D1.1.

STEEL SOLDIER PILING

This work shall consist of furnishing and installing steel piling; securing the piling prior to and during concrete encasement, and shaping the tops of the piles.

CONTRACT CHANGE ORDER NO. 61
SHEET 22 OF 85

Construction

Steel soldier piles shall be placed in a drilled hole and shall be plumbed and aligned before placing concrete backfill. Alignment shall be maintained while placing backfill material in the drilled holes.

MEASUREMENT AND PAYMENT (PILING)

Measurement and payment for the various types and classes of piles shall conform to the provisions in Sections 49-6.01, "Measurement," and 49-6.02, "Payment," of the Standard Specifications and these special provisions.

The contract price paid per meter for furnish and install soldier piles shall include full compensation for furnishing all labor, materials, tools, equipment, and incidentals, and for doing all the work involved in furnishing and installing the steel piles at the site to the required penetration, including securing the piling to maintain accurate alignment prior to and during encasing the pile with concrete, shaping pile tops, as specified in the Standard Specifications and these special provisions, and as directed by the Engineer.

10-1.__ DRILLED HOLES

Holes for steel soldier piles shall be drilled into natural foundation materials at the location shown on the plans and shall conform to the provisions in Section 49, "Piling," of the Standard Specifications and these special provisions.

Drilled holes shall be accurately located and shall be straight and true. When the piles are plumbed and aligned, the steel piles shall be at least 25 mm clear of the sides of the hole for the full length of the hole to be filled with concrete backfill and lean concrete backfill. Holes which do not provide the clearance around steel piles shall be reamed or enlarged at the Contractor's expense.

Temporary casings or tremie seals shall be furnished and placed where necessary to control water or to prevent caving of the hole.

Difficult drilling is anticipated due to the presence of caving soils,cobbles and boulders, .

Attention is directed to rock subsurface foundation material at the soldier pile retaining wall site. At locations where hard drilling conditions such a rock, cobbles, boulders or obstructions are anticipated, suitable drilling equipment shall be available on site to drill holes for soldier piles.

Loose materials existing at the bottom of the hole after drilling operations have been completed shall be removed before placing the pile.

Materials resulting from drilling holes shall be disposed of in conformance with the provisions in Section 19-2.06, "Surplus Material," of the Standard Specifications.

Drilling mud or chemical stabilizers shall not be used. Surface water shall not be permitted to enter the hole and all water in the hole shall be removed before placing concrete therein.

Casing, if used in drilling operations, shall be removed from the hole as concrete is placed therein. The bottom of the casing shall be maintained not more than 1500 mm nor less than 300 mm below the top of the concrete during casing withdrawal and concrete placing operations. Separation of the concrete during withdrawal operations shall be avoided by hammering or otherwise vibrating the casing. The methods used to withdraw temporary casings shall preclude contamination of the concrete and commingling of the soil and concrete or of any ground water and concrete.

The contract price paid per meter for 610 mm_drilled hole (soldier pile)_shall include full compensation for furnishing all labor, materials, tools, equipment, and incidentals and for doing all the work involved in drilling holes for soldier piles, including disposing of the material

CONTRACT NO. 04-0120R4
CONTRACT CHANGE ORDER NO. 1e1
SHEET 23 OF 85

resulting from drilled holes, dewatering, casing holes and removing casing, and providing tremie seals, complete in place, as shown on the plans, as specified in the Standard Specifications and these special provisions, and as directed by the Engineer.

Full compensation for drilling in the rock subsurface foundation material shall be considered as included in the contract price paid per meter for 610 mm drilled hole, and no additional compensation will be allowed therefor.

10-1.__ CONCRETE STRUCTURES

Portland cement concrete structures shall conform to the provisions in Section 51, "Concrete Structures," of the Standard Specifications and these special provisions.

The cast-in-place concrete facing at soil nail wall shall conform to the provisions in Section 51, "Concrete Structures", of the Standard Specifications and these special provisions.

Shotcrete shall not be used as an alternative construction method for reinforced concrete members unless otherwise specified.

MEASUREMENT AND PAYMENT

Measurement and payment for concrete in structures shall conform to the provisions in Section 51-1.22, "Measurement," and Section 51-1.23, "Payment," of the Standard Specifications and these special provisions.

Concrete for the cast-in-place facing at soil nail wall will be measured and paid for by the cubic meter as structural concrete, retaining wall.

10-1.__ DRILL AND BOND DOWEL (EPOXY CARTRIDGE)

Drilling and bonding dowels with epoxy cartridges shall conform to the details shown on the plans and these special provisions.

Reinforcing steel dowels shall conform to the provisions in "Reinforcement" of these special provisions.

Threaded rods used as dowels shall conform to the provisions in Section 75-1.03, "Miscellaneous Bridge Metal," of the Standard Specifications. The threaded rods shall be installed in conformance with these requirements for dowels specified herein.

The Contractor shall select an epoxy cartridge system which has passed the testing requirements of the International Conference of Building Officials (ICBO) document - AC58 and additional test requirements as specified in the Caltrans Augmentation/Revisions to ICBO AC58. Testing shall be performed by an independent testing facility and the results will be reviewed and approved by the Transportation Laboratory. The Caltrans Augmentation/Revisions to ICBO AC58 document may be obtained by contacting the Transportation Laboratory, telephone: (916) 227-7000.

The epoxy cartridge system used shall be appropriate for the ambient concrete temperature and installation conditions at the time of installation in conformance with the manufacturer's specifications.

Epoxy cartridges shall be accompanied by a Certificate of Compliance as provided in Section 6-1.07, "Certificates of Compliance," of the Standard Specifications. The certificate shall state that the material complies in all respects to the requirements of ICBO AC58 and Caltrans Augmentation/Revisions to ICBO AC58.

Each epoxy cartridge shall be clearly and permanently marked with the manufacturer's name, model number of the epoxy cartridge system, manufacturing date, and lot number. Each carton of epoxy cartridges shall contain the manufacturer's recommended installation procedures, minimum cure time, and such warning or precautions concerning the contents as may be required by State or Federal Laws and Regulations.

CONTRACT CHANGE ORDER NO. 04-0L2054 61
SHEET 24 OF 85

The holes shall be drilled by methods that will not shatter or damage the concrete adjacent to the holes. If reinforcement is encountered during drilling, before the specified depth is attained, the Engineer shall be notified. Unless the Engineer approves, in writing, coring through the reinforcement, the hole will be rejected and a new hole, in which reinforcement is not encountered, shall be drilled adjacent to the rejected hole to the depth recommended by the manufacturer.

The drilled holes shall be cleaned in conformance with the manufacturer's instructions and shall be dry at the time of placing the epoxy cartridge bonding material and the steel dowels. The bonding material shall be a 2-component epoxy system contained in a cartridge having 2 separate chambers and shall be inserted into the hole using a dispensing gun and replaceable mixing nozzle approved by the manufacturer. Unless otherwise specified, the depth of hole and the installation procedure shall be as recommended by the manufacturer. A copy of the manufacturer's recommended installation procedure shall be provided to the Engineer at least 2 days prior to the start of work.

Immediately after inserting the dowels into the epoxy, the dowels shall be supported as necessary to prevent movement during curing and shall remain undisturbed until the epoxy has cured a minimum time as specified by the manufacturer. Dowels that are improperly bonded, as determined by the Engineer, will be rejected. Adjacent new holes shall be drilled, and new dowels shall be placed and securely bonded to the concrete. All work necessary to correct improperly bonded dowels shall be performed at the Contractor's expense.

Unless otherwise provided, dowels to be bonded into drilled holes will be measured and paid for as bar reinforcing steel (bridge).

Unless otherwise provided, drilling and bonding dowels with epoxy cartridges will be measured and paid for by the unit as drill and bond dowel (epoxy cartridge). The number of units to be paid for will be determined from actual count of the completed units in place.

The contract unit price paid for drill and bond dowel (epoxy cartridge) shall include full compensation for furnishing all labor, materials (except dowels), tools, equipment, and incidentals, and for doing all the work involved in drilling the holes and bonding dowels with epoxy cartridges, including coring through reinforcement when approved by the Engineer, complete in place, as shown on the plans, as specified in the Standard Specifications and these special provisions, and as directed by the Engineer.

CONTRACT CHANGE ORDER NO. 61

SHEET 25 OF 85

10-1.__ DRILL AND BOND DOWELS

Drilling and bonding dowels shall conform to the details shown on the plans, the provisions in Section 83-2.02D(1), "General," of the Standard Specifications, and these special provisions.

Dowels shall conform to the provisions for bar reinforcement in "Reinforcement" of these special provisions.

If reinforcement is encountered during drilling before the specified depth is attained, the Engineer shall be notified. Unless the Engineer approves coring through the reinforcement, the hole will be rejected and a new hole, in which reinforcement is not encountered, shall be drilled adjacent to the rejected hole to the depth shown on the plans.

Unless otherwise provided, dowels to be bonded into drilled holes will be paid for as bar reinforcing steel (bridge).

Unless otherwise provided, drilling and bonding dowels will be measured and paid for by the meter determined by the number and the required depth of holes as shown on the plans or as ordered by the Engineer.

The contract price paid per meter for drill and bond dowel shall include full compensation for furnishing all labor, materials (except reinforcing steel dowels), tools, equipment, and incidentals, and for doing all the work involved in drilling the holes, including coring through reinforcement when approved by the Engineer, and bonding the dowels, complete in place, as shown on the plans, as specified in the Standard Specifications and these special provisions, and as directed by the Engineer.

10-1.__ REINFORCEMENT

Reinforcement shall conform to the provisions in Section 52, "Reinforcement," of the Standard Specifications and these special provisions.

The Department's mechanical splices prequalified list can be found at the following internet site:

http://www.dot.ca.gov/hq/esc/approved_products_list/

The provisions of "Welding Quality Control" of these special provisions shall not apply to resistance butt welding.

MEASUREMENT AND PAYMENT

Measurement and payment for reinforcement in structures shall conform to the provisions in Section 52-1.10, "Measurement," and Section 52-1.11, "Payment," of the Standard Specifications and these special provisions.

10-1.__ SHOTCRETE

Shotcrete shall conform to the provisions in Section 51, "Concrete Structures," and Section 53, "Shotcrete," of the Standard Specifications and these special provisions.

Shotcrete operations shall completely encase all reinforcement and other obstructions shown on the plans. Exceptional care shall be taken to properly encase the reinforcement and other obstructions with shotcrete.

Except for finish coats, shotcrete shall be applied by the wet-mix process only.

Finish coats, applied by the dry-mix process, may be used only when approved by the Engineer.

Shotcrete shall have a minimum compressive strength of 22.5 MPa at 28 days or as shown on the plans, whichever is greater. No shotcrete work shall be performed prior to verification by the Engineer of the required compressive strength.

Splicing of reinforcing bars No. 22 or larger in shotcrete shall be by butt splicing only.

The Contractor shall be responsible for obtaining and testing all required preconstruction and production test cores. All coring and testing shall be at the Contractor's expense and performed in the presence of the Engineer, unless otherwise directed. The Engineer shall be notified a minimum of 24 hours prior to the Contractor performing any coring or testing operations.

All cores shall be obtained and tested for compressive strength in conformance with the requirements in ASTM Designation: C 42. Cores used for determining compressive strength shall not contain any bar reinforcement or other obstructions. The testing shall be performed at an independent testing facility approved by the Engineer. A copy of the test results shall be furnished to the Engineer within 5 days following completion of testing.

CONTRACT NO. 04-0120F4
CONTRACT CHANGE ORDER NO. 61
SHEET 26 OF 85

All test panels shall become the property of the Contractor and shall be disposed of in conformance with the provisions in Section 7-1.13, "Disposal of Material Outside the Highway Right of Way," of the Standard Specifications.

PRECONSTRUCTION REQUIREMENTS

Prior to performing shotcrete work, the Contractor shall construct at least 2 preconstruction shotcrete test panels for each mixture being considered unless otherwise specified.

The nozzleperson shall have a minimum of 3000 hours experience as a nozzleperson on projects with a similar application.

At least 10 working days prior to constructing any shotcrete test panels, the Contractor shall submit to the Engineer for approval, a Quality Control Plan (QCP) for the proposed method of shotcrete placement. The plan shall include the following:

A. The number and qualifications of nozzlepersons available to place shotcrete, the number of nozzlepersons on-site at any time during the shotcrete placement, description of their work schedule, and the procedures for avoiding fatigue of any nozzleperson.
B. The proposed method of placing shotcrete, including, but not limited to, application rates, details of any proposed construction joints and their locations, and methods for achieving the required thickness and surface finish.
C. The procedure for curing shotcrete surfaces.
D. The description of a debris containment system, to be used during the cleaning of bar reinforcing steel and concrete and placing of shotcrete, as required to provide for public safety.

The Engineer shall have 10 working days to review and approve the QCP submittal after a complete plan has been received. No construction of shotcrete test panels shall be performed until the QCP is approved by the Engineer. Should the Engineer fail to complete the review within this time allowance, and if, in the opinion of the Engineer, the Contractor's controlling operation is delayed or interfered with by reason of the delay in approving the QCP, the delay will be considered a right of way delay in conformance with the provisions in Section 8-1.09, "Right of Way Delays," of the Standard Specifications.

Preconstruction shotcrete test panels shall be constructed by the nozzlepersons and application crew scheduled to do the work, using equipment, materials, mixing proportions, ambient temperatures and procedures proposed for the work. The preconstruction shotcrete test panels shall conform to the following:

A. One shotcrete test panel, of the size determined by the Contractor, shall be unreinforced and shall have 3 cores taken from it and tested for compressive strength. The compressive strength shall be the average strength of the 3 cores, except that, if any core should show evidence of improper coring, the core shall be discarded and the compressive strength shall be the average strength of the remaining cores. The test panel shall be identified and submitted to the Engineer with the test results including a description of the mixture, proportions, and ambient temperature.
B. One shotcrete test panel shall have the same (1) thickness, (2) bar size and amount of bar reinforcement or other obstructions and (3) positioning of bar reinforcement or obstructions as the most heavily reinforced section of shotcrete to be placed. The test panel shall be square with the length of the sides equal to at least 3 times the thickness of

CONTRACT NO. 04-0120R4
CONTRACT CHANGE ORDER NO. 61
SHEET 21 OF 85

the most heavily reinforced section of shotcrete to be placed, but not less than 750 mm. After a minimum 7 days of cure, the test panel shall be broken by the Contractor, in the presence of the Engineer, into pieces no larger than 250 mm in greatest dimension. The surfaces of the broken pieces shall be dense and free of laminations and sand pockets, and shall verify that the bar reinforcement or other obstructions are completely encased.

C. Both test panels shall be cured under conditions similar to the actual work.

D. At the option of the Contractor, cores to be used for determining the compressive strength may be taken from the reinforced test panel described above in lieu of making a separate unreinforced test panel as described above. The compressive strength shall be the average strength of the 3 cores, except that, if any core should show evidence of improper coring or contains bar reinforcement or other obstructions, the core shall be discarded and the compressive strength shall be the average strength of the remaining cores. If cores are taken from the reinforced test panel, the panel shall not be broken into pieces, as described above, until it has cured for a minimum of 14 days.

The requirements for constructing preconstruction shotcrete test panels may be eliminated, when approved by the Engineer, if a test panel report and certified compressive strength test data are furnished from a State highway project with a similar application of approximately equal thickness, including similar amounts and placement of reinforcement or other obstructions. The nozzle person, proposed to be used, shall have constructed the test panel described in the test panel report. The test panel report shall list the names of the application crew, equipment used, materials, mixing proportions, ambient temperatures and procedures used to make the test panels. The certified compressive strength test data shall be for cores taken from the same test panels.

CONTRACT NO. 04-0120R
CONTRACT CHANGE ORDER NO. 61
SHEET 28 OF 85

PLACING

An air blowpipe shall be used during shotcrete placement to remove rebound, overspray and other debris from the areas to receive shotcrete.

Construction joints shall be tapered, and shall conform to the provisions in Sections 51-1.13, "Bonding," of the Standard Specifications.

All overspray and rebound shall be removed prior to final set and before placement of shotcrete on adjacent surfaces.

Rebound or any other material which has already exited the nozzle shall not be reused.

Shotcrete shall be cured in conformance with the provisions of Section 90-7.03, "Curing Structures," of the Standard Specifications.

When a finish coat is to be used, all loose, uneven or excess material, glaze, and rebound shall be removed by brooming, scraping, or other means and the surface left scarified. Any surface deposits which take a final set shall be removed by abrasive blasting. Prior to placing the finish coat, the receiving surface shall be washed down with an air-water blast.

Shotcrete extending into the space shown on the plans for cast-in-place concrete shall be removed.

TESTING AND ACCEPTANCE

At least 3 production shotcrete test cores shall be taken from each 30 square meters or portion thereof of shotcrete placed each day. The cores shall be 76 mm in diameter. The location where cores are to be taken will be designated by the Engineer. Test cores shall be identified by the Contractor and a description of the core location and mixture, including

proportions, shall be submitted to the Engineer with the test cores, immediately after coring. Cored holes shall be filled with mortar in conformance with the provisions in Section 51-1.135, "Mortar," of the Standard Specifications.

Upon receipt of the cores, the Engineer will perform a visual examination to determine acceptance, as described below. Within 48 hours after receipt, the Engineer will return the cores to the Contractor for compressive strength testing.

The compressive strength test shall be performed using the shotcrete production test cores described above. The compressive strength shall be the average strength of the 3 cores, except that, if any core should show evidence of improper coring, the core shall be discarded and the compressive strength shall be the average strength of the remaining cores.

The basis of acceptance for production shotcrete test cores shall be (1) that the core is dense and free of laminations and sand pockets, and shows that the reinforcement or other obstructions are completely encased and (2) the same as specified for test cylinders in the fourth and fifth paragraphs of Section 90-9.01, "General," of the Standard Specifications.

If any production test core shows signs of defective shotcrete as described in (1) above, the shotcrete represented by such test core will be rejected, unless the Contractor, at the Contractor's expense, obtains and submits evidence acceptable to the Engineer that the strength and quality of the shotcrete placed in the work are acceptable.

The surface finish of the shotcrete shall conform to the provisions of Section 51-1.18, "Surface Finishes," of the Standard Specifications.

MEASUREMENT AND PAYMENT

Full compensation for the Quality Control Plan, constructing and breaking test panels, furnishing and testing cores and patching cored holes shall be considered as included in the contract price paid per cubic meter for shotcrete and no additional compensation will be allowed therefor.

10-1.__ TIMBER LAGGING

Timber lagging shall conform to the details shown on the plans and the provisions in Sections 57, "Timber Structures," and 58, "Preservative Treatment of Lumber, Timber and Piling," of the Standard Specifications and these special provisions.

All timber members shall be preservative treated Douglas fir of the grades shown on the plans. Timber members shall be full sawn to the dimensions shown on the plans.

Preservative treatment shall conform to AWPA Use Category System: UC4B, Commodity Specification A, except that chromated copper arsenate shall not be used.

Timbers 100 mm thick or less shall be installed with a 10 mm gap between lagging members except where shown on the plans. Timbers greater than 100 mm thick shall be installed with a 13 mm gap between lagging members except where shown on the plans.

CONTRACT NO. 04-0120R4

CONTRACT CHANGE ORDER NO. 61

SHEET 29 OF 85

CONTRACT NO. 04-0120R4

CONTRACT CHANGE ORDER NO. 61

SHEET 36 OF 85

DIST.	COUNTY	ROUTE	KILOMETER POST TOTAL PROJECT	SHEET NO.	TOTAL SHEETS
04	SF	80			

A.I. Ely
REGISTERED ENGINEER - CIVIL

PLANS APPROVAL DATE

The State of California or its officers or agents shall not be responsible for the accuracy or completeness of electronic copies of this plan sheet.

REGISTERED PROFESSIONAL ENGINEER — A.I. ELY — No. 18880 — Exp. 6-30-07 — CIVIL — STATE OF CALIFORNIA

T.Y. LIN / MOFFATT & NICHOL
TWO HARRISON STREET
SAN FRANCISCO, CA 94105

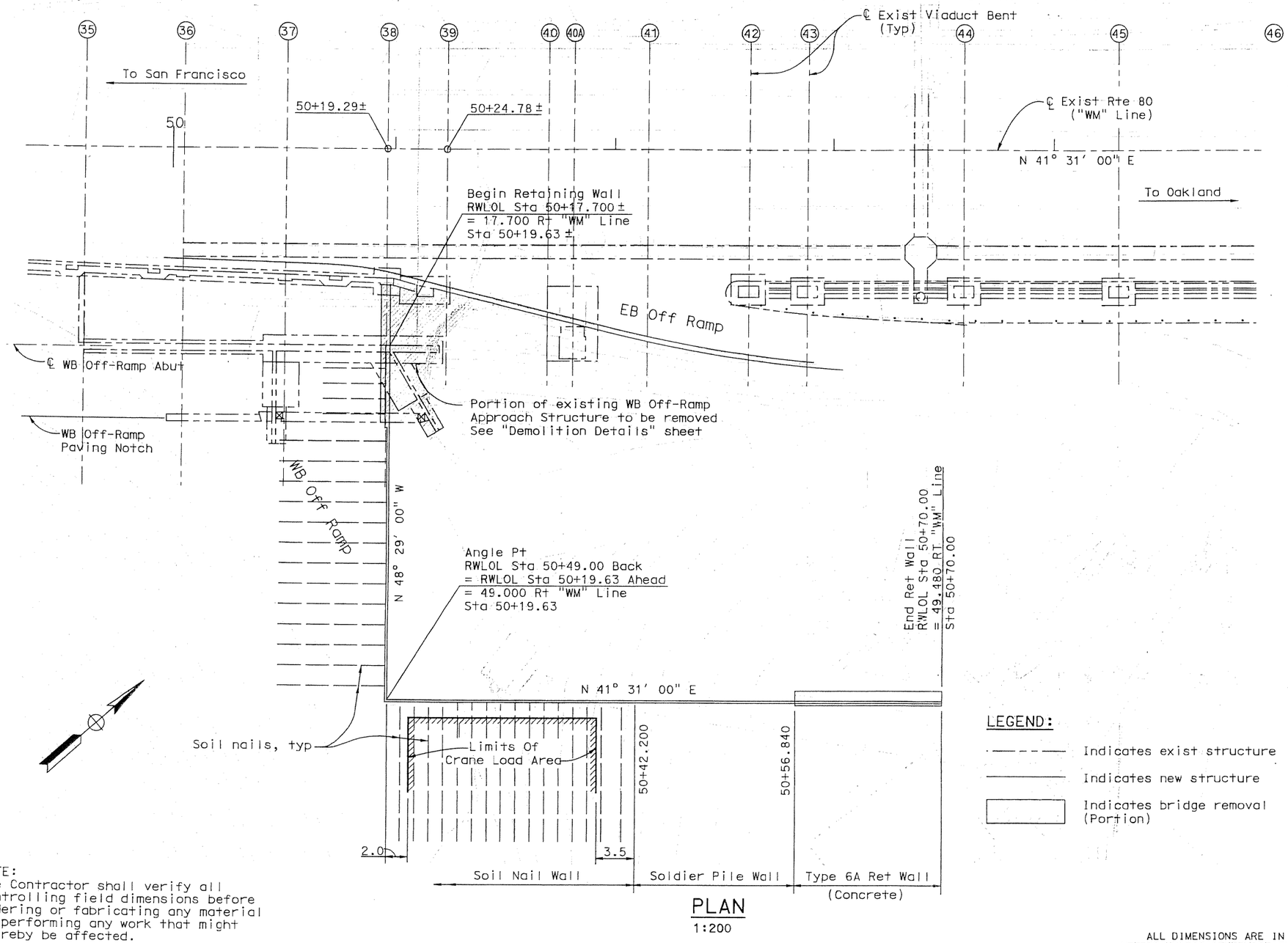

PLAN
1:200

NOTE:
The Contractor shall verify all controlling field dimensions before ordering or fabricating any material or performing any work that might thereby be affected.

GENERAL NOTES

Load Factor Design

Design: Caltrans Design Specifications-April 2000 (LFD)
(1996 AASHTO with interims and revisions by Caltrans)
Reinforced Concrete: Fy = 420 MPa
F'c = 25 MPa
Structural Steel: ASTM Designation A709/A709M
Fy = 250 MPa

Crane Load (On Cribbing):

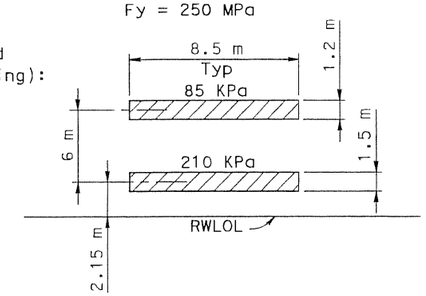

INDEX TO RETAINING WALL PLANS

1. WALL LAYOUT PLAN
2. DEMOLITION DETAILS
3. WALL ELEVATION
4. TYPICAL WALL SECTIONS
5. MISCELLANEOUS WALL DETAILS
6. SOIL NAIL WALL DETAILS
7-9. LOG OF TEST BORINGS (NO.1 TO NO.3)

APPLICABLE STANDARD PLANS (DATED JULY 1999)

A10A	ABBREVIATIONS
A10B	SYMBOLS
A62B	LIMITS OF PAYMENT FOR EXCAVATION AND BACKFILL - BRIDGE SURCHARGE AND WALL
A62C	LIMITS OF PAYMENT FOR EXCAVATION AND BACKFILL - BRIDGE
B0-1	BRIDGE DETAILS
B0-3	BRIDGE DETAILS
B3-11	RETAINING WALL TYPE 6

LEGEND:

- Indicates exist structure
- Indicates new structure
- Indicates bridge removal (Portion)

SUPPLEMENTAL SHEET

CONTRACT CHANGE ORDER NO. ____
SHEET ____ OF ____

FINAL SUBMITTAL
USERNAME => fcamson DATE PLOTTED => 1/19/2007 TIME PLOTTED => 11:29:56 PM

ALL DIMENSIONS ARE IN METERS UNLESS OTHERWISE SHOWN

SAN FRANCISCO OAKLAND BAY BRIDGE
EAST SPAN SEISMIC SAFETY PROJECT

YBI VIADUCT REPLACEMENT / WEST TIE IN

STAGING AREA RETAINING WALL

WALL LAYOUT PLAN

DESIGN OVERSIGHT - MIKE CULLEN

SIGN OFF DATE

Rev. Date: 5-18-98

	BY	CHECKED
DESIGN	Desai	Lee
DETAILS	Lu	Desai
QUANTITIES	Lee	Birdy

PREPARED FOR THE STATE OF CALIFORNIA DEPARTMENT OF TRANSPORTATION

Jal Birdy
PROJECT ENGINEER

BRIDGE NO. 34-0006
KILOMETER POST 12.8

CU 04
EA 0120P1

ORIGINAL SCALE IN MILLIMETERS FOR REDUCED PLANS 0 10 20 30 40 50 60 70 80 90 100

DISREGARD PRINTS BEARING EARLIER REVISION DATES →

REVISION DATES (PRELIMINARY STAGE ONLY): 1/08/07 1/15/07 1/22/07

SHEET 1 OF 9

FILE => D:\4141-06\CADD\Temp Ret Wall 1\Final Submittal\rw1_plan.dgn

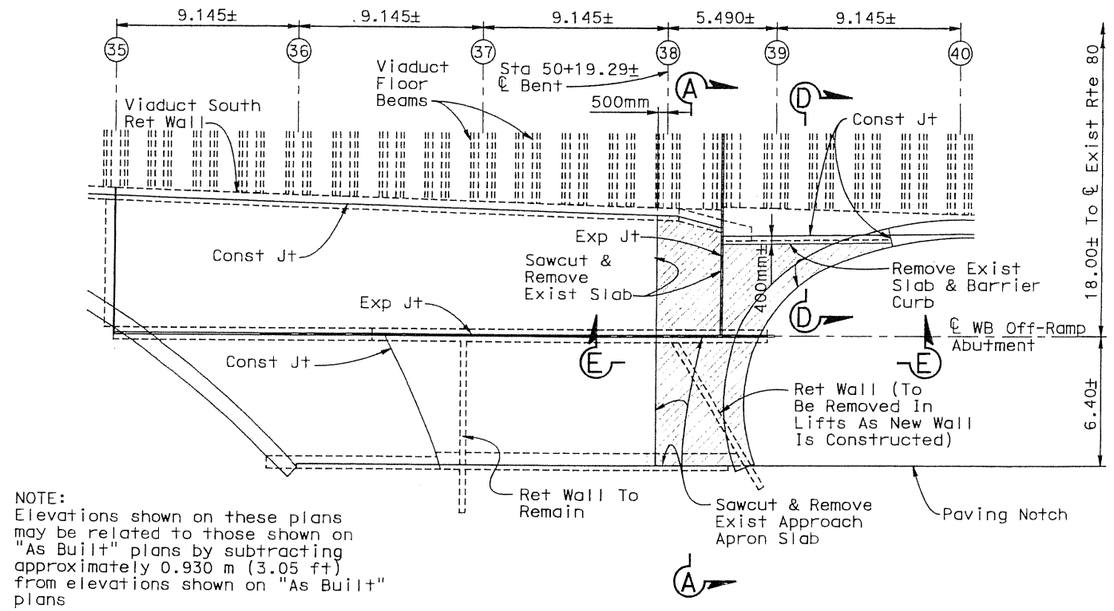

NOTE:
Elevations shown on these plans may be related to those shown on "As Built" plans by subtracting approximately 0.930 m (3.05 ft) from elevations shown on "As Built" plans

PLAN AT WB OFF-RAMP APPROACH
1:150

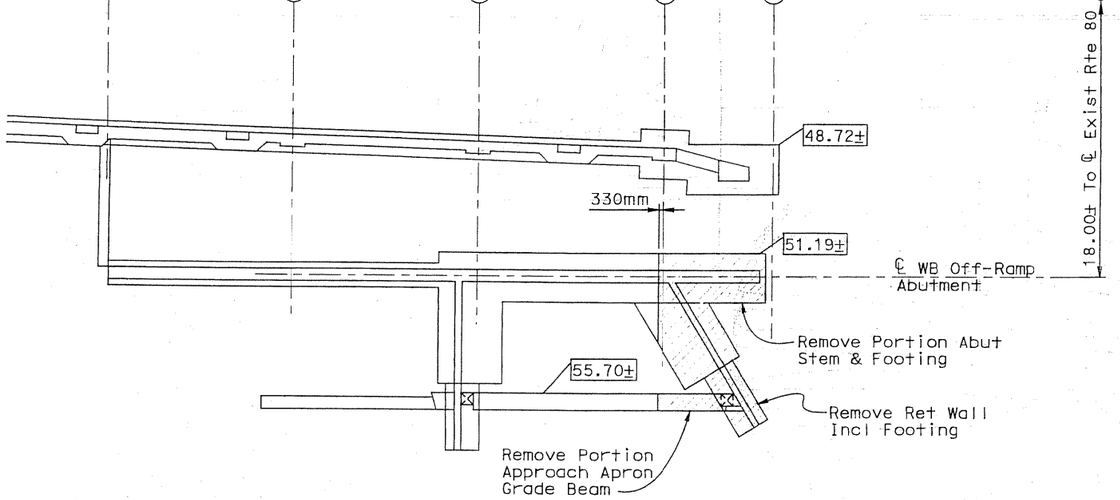

FOOTING PLAN AT WB OFF-RAMP APPROACH
1:150

NOTE:
The Contractor shall verify all controlling field dimensions before ordering or fabricating any material or performing any work that might thereby be affected.

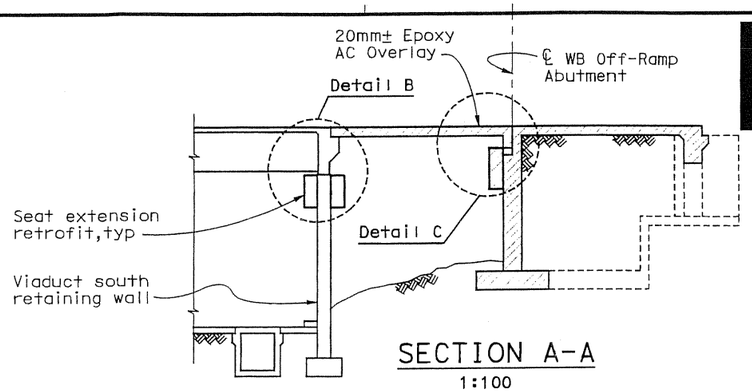

SECTION A-A
1:100

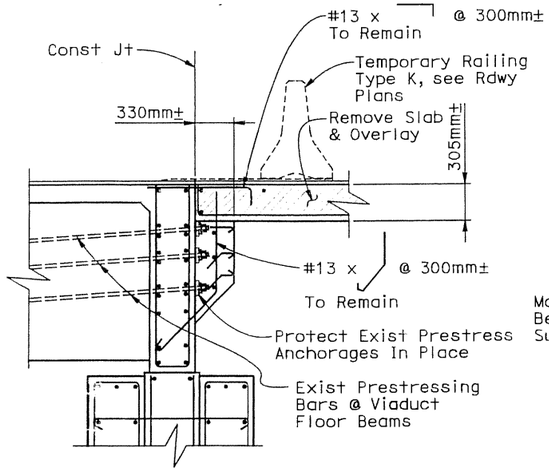

DETAIL B
1:25

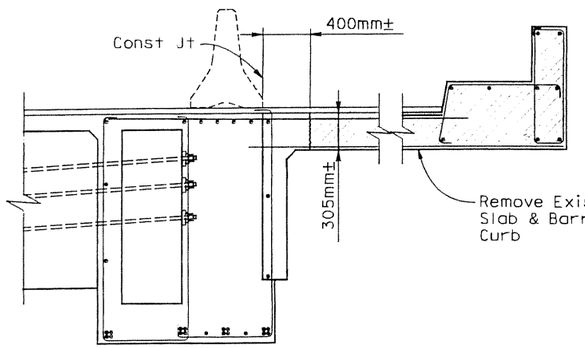

SECTION D-D
1:25

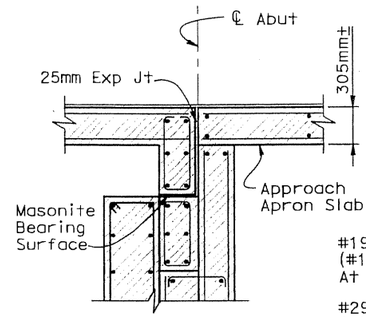

DETAIL C
1:25

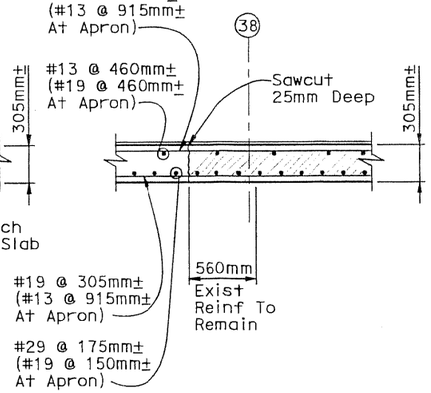

DETAIL F
1:25

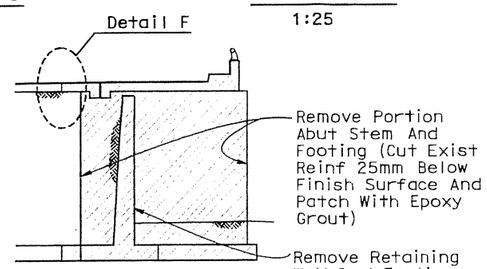

SECTION E-E
1:100

NOTE:
Indicates bottom of footing elevation

LEGEND:

Indicates Bridge Removal (Portion)

DIST.	COUNTY	ROUTE	KILOMETER POST TOTAL PROJECT	SHEET NO.	TOTAL SHEETS
04	SF	80			

REGISTERED ENGINEER - CIVIL

PLANS APPROVAL DATE

REGISTERED PROFESSIONAL ENGINEER — A.L. FLY — No. 18880 — Exp. 6-30-07 — CIVIL — STATE OF CALIFORNIA

The State of California or its officers or agents shall not be responsible for the accuracy or completeness of electronic copies of this plan sheet.

T.Y.LIN / MOFFATT & NICHOL
TWO HARRISON STREET
SAN FRANCISCO, CA 94105

SUPPLEMENTAL SHEET 04-0120R4

CONTRACT CHANGE ORDER NO. 61
SHEET 31 OF 85

FINAL SUBMITTAL

ALL DIMENSIONS ARE IN METERS UNLESS OTHERWISE SHOWN

SAN FRANCISCO OAKLAND BAY BRIDGE
EAST SPAN SEISMIC SAFETY PROJECT

YBI VIADUCT REPLACEMENT / WEST TIE IN
STAGING AREA RETAINING WALL
DEMOLITION DETAILS

DESIGN OVERSIGHT - MIKE CULLEN
SIGN OFF DATE

	BY	CHECKED
DESIGN	Desai	Lee
DETAILS	Lu	Desai
QUANTITIES	Lee	Birdy

PREPARED FOR THE STATE OF CALIFORNIA DEPARTMENT OF TRANSPORTATION

Jal Birdy
PROJECT ENGINEER

BRIDGE NO. 34-0006
KILOMETER POST 12.8

CU 04
EA 0120P1

DISREGARD PRINTS BEARING EARLIER REVISION DATES →

REVISION DATES (PREILIMINARY STAGE ONLY): 1/26/07 1/25/07 1/22/07

SHEET 2 OF 9

Rev. Date: 5-18-98

ORIGINAL SCALE IN MILLIMETERS FOR REDUCED PLANS 0 10 20 30 40 50 60 70 80 90 100

USERNAME => fsomson DATE PLOTTED => 1/19/2007 TIME PLOTTED => 1:31:20 PM

FILE => p:\4141-06\CADD\Temp Ret Wall 1\Final Submittal\DEMOLITION DET.DGN

DIST.	COUNTY	ROUTE	KILOMETER POST TOTAL PROJECT	SHEET NO.	TOTAL SHEETS
04	SF	80			

REGISTERED ENGINEER - CIVIL

PLANS APPROVAL DATE

The State of California or its officers or agents shall not be responsible for the accuracy or completeness of electronic copies of this plan sheet.

REGISTERED PROFESSIONAL ENGINEER — A.L. ELY — No. 18880 — Exp. 6-30-07 — CIVIL — STATE OF CALIFORNIA

T.Y. LIN / MOFFATT & NICHOL
TWO HARRISON STREET
SAN FRANCISCO, CA 94105

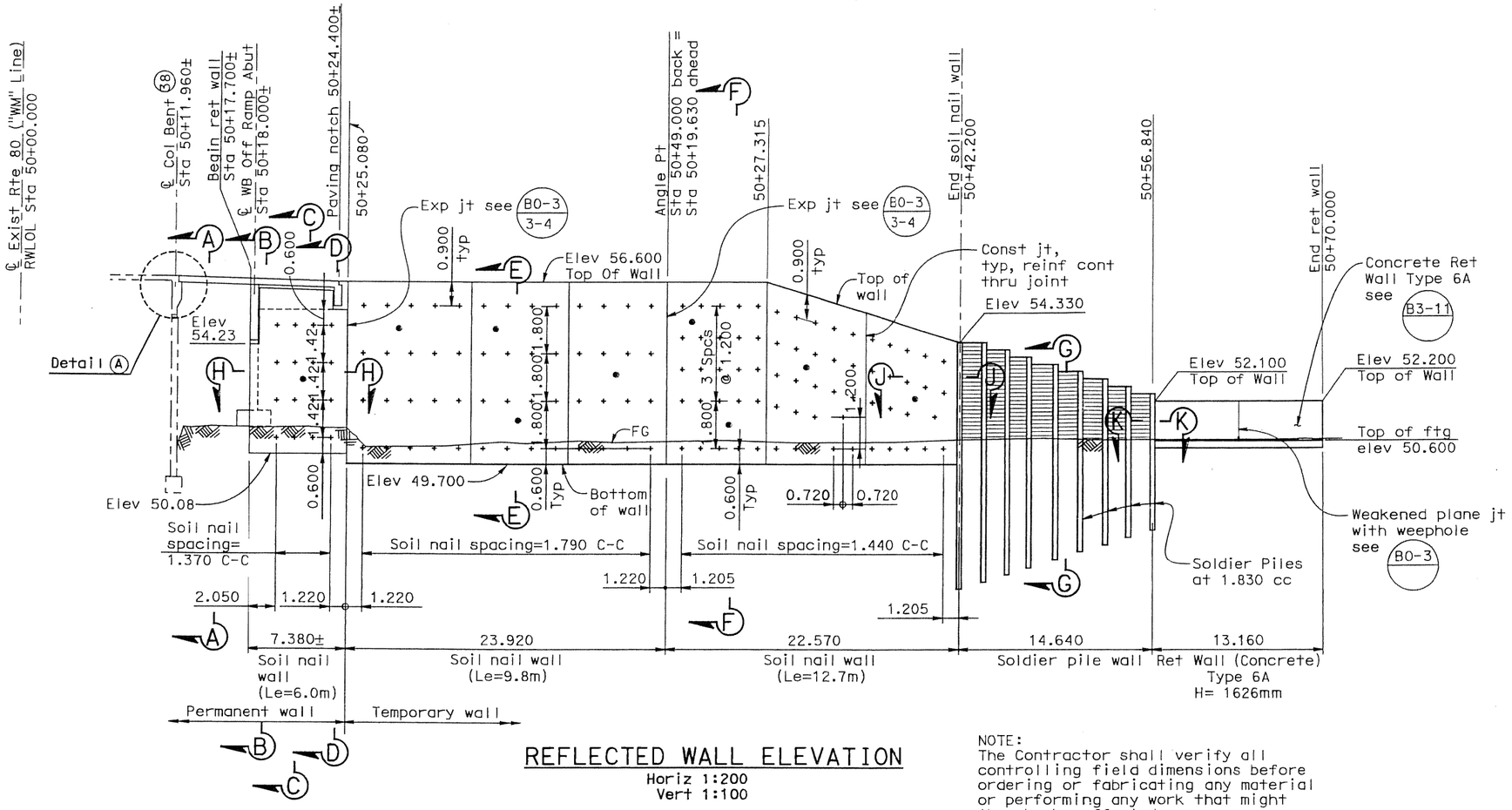

REFLECTED WALL ELEVATION

Horiz 1:200
Vert 1:100

Notes:

1 - Exact location of test soil nails to be determined by Engineer in the field
2 - For weepholes at Soil Nail Wall see "Soil Nail Wall Details" sheet
3 - For Sections A-A thru G-G see "Typical Wall Sections" sheet

+ Indicates location of soil nail assembly

• Indicates location of test soil nail

Le Indicates embedment length of soil nail see "Soil Nail Wall Details" sheet

NOTE:
The Contractor shall verify all controlling field dimensions before ordering or fabricating any material or performing any work that might thereby be affected.

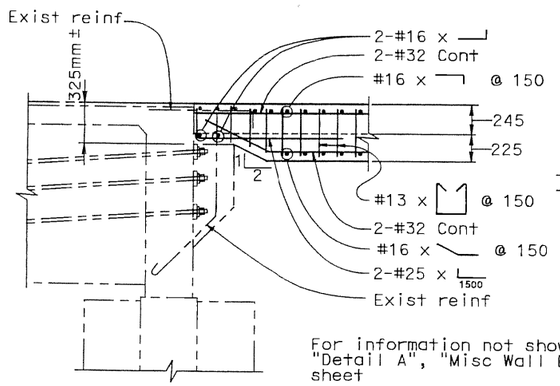

DETAIL A

1:25

For information not shown see "Detail A", "Misc Wall Details" sheet

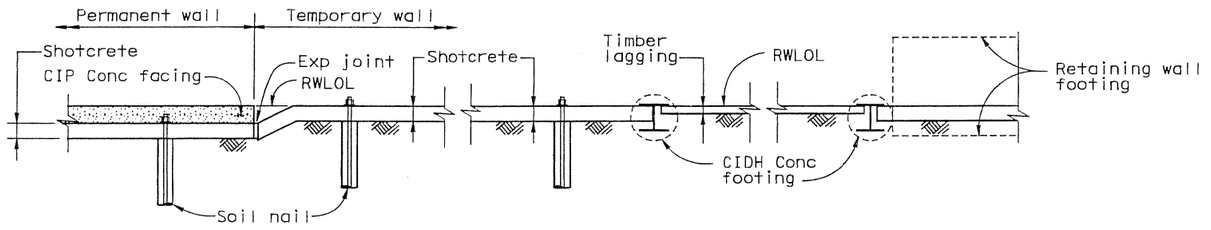

SECTION H-H

1:40

SECTION J-J

1:40

SECTION K-K

1:40

ALL DIMENSIONS ARE IN METERS UNLESS OTHERWISE SHOWN

04-0120R4

SUPPLEMENTAL SHEET

CONTRACT CHANGE ORDER NO. 61
SHEET 32 OF 85

FINAL SUBMITTAL
TIME PLOTTED => 11:31:50 PM
DATE PLOTTED => 1/19/2007
USERNAME => fsomson

SAN FRANCISCO OAKLAND BAY BRIDGE
EAST SPAN SEISMIC SAFETY PROJECT

YBI VIADUCT REPLACEMENT / WEST TIE IN

STAGING AREA RETAINING WALL

WALL ELEVATION

DESIGN OVERSIGHT - MIKE CULLEN	DESIGN	BY Desai	CHECKED Lee
SIGN OFF DATE	DETAILS	BY Lu	CHECKED Desai
Rev. Date: 5-18-98	QUANTITIES	BY Lee	CHECKED Birdy

PREPARED FOR THE STATE OF CALIFORNIA DEPARTMENT OF TRANSPORTATION

Jal Birdy
PROJECT ENGINEER

BRIDGE NO. 34-0006
KILOMETER POST 12.8

ORIGINAL SCALE IN MILLIMETERS FOR REDUCED PLANS 0 10 20 30 40 50 60 70 80 90 100

CU 04
EA 0120P1

DISREGARD PRINTS BEARING EARLIER REVISION DATES →

REVISION DATES (PRELIMINARY STAGE ONLY): 1/08/07 1/15/07 1/22/07

SHEET 3 OF 9

FILE => p:\4141-06\CADD\Temp Ret Wall 1\Final Submittal\rw1 ELEV.dgn

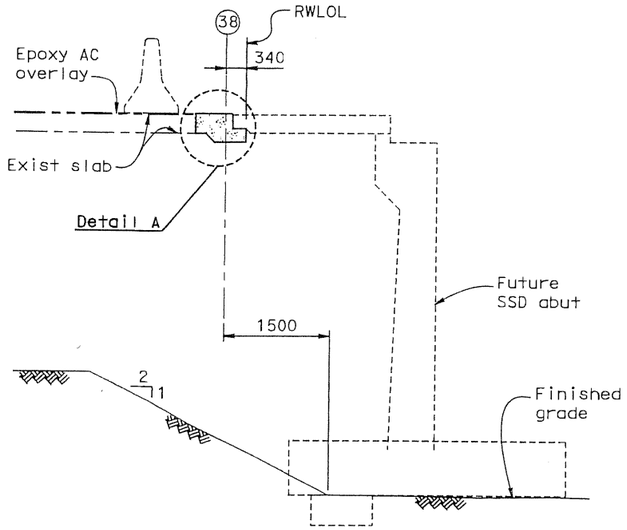

SECTION A-A
1:50

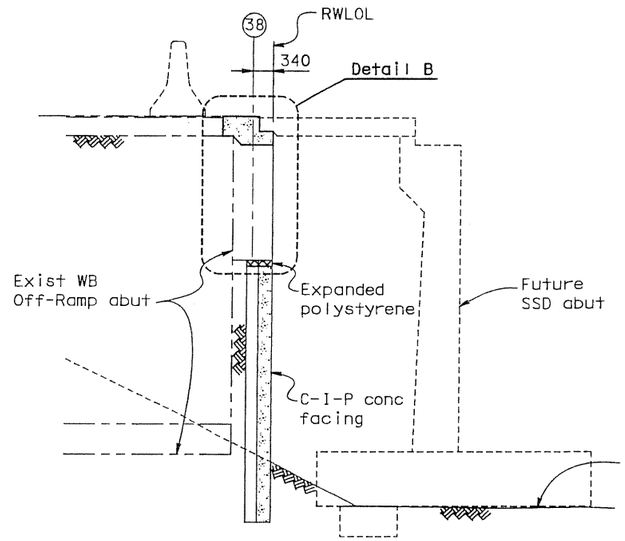

SECTION B-B
1:50

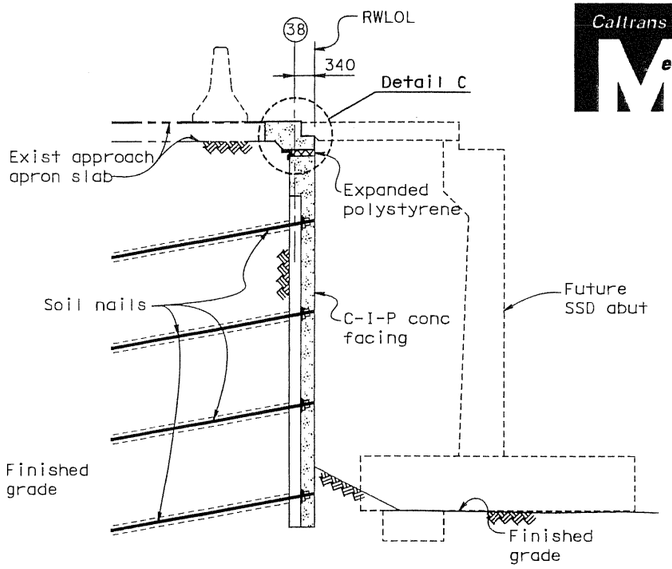

SECTION C-C
1:50

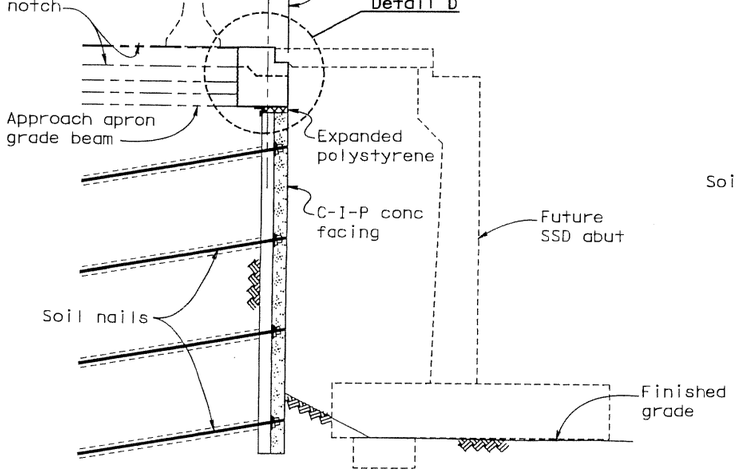

SECTION D-D
1:50

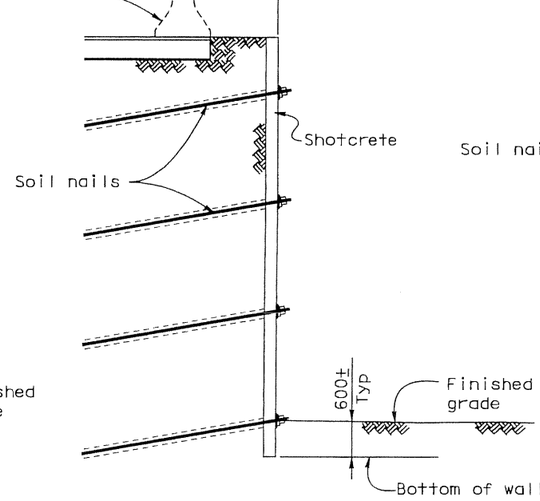

SECTION E-E
1:50

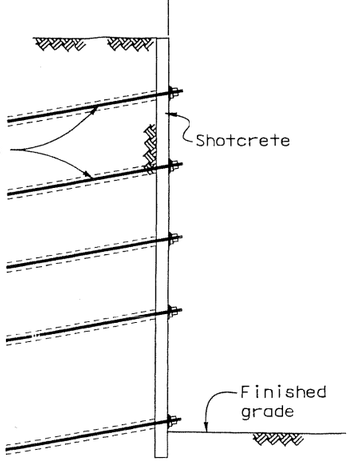

SECTION F-F
1:50

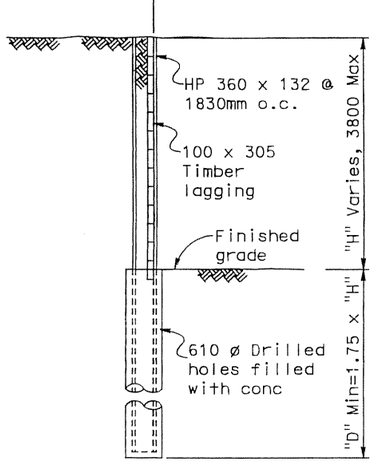

SECTION G-G
1:50

NOTE:
-For locations of sections shown on this sheet see "Wall Elevation" sheet.

-For Details (A),(B),(C) & (D) see "Miscellaneous Wall Details" sheet.

NOTE:
The Contractor shall verify all controlling field dimensions before ordering or fabricating any material or performing any work that might thereby be affected.

ALL DIMENSIONS ARE IN MILLIMETERS UNLESS OTHERWISE SHOWN

Caltrans Metric

DIST.	COUNTY	ROUTE	KILOMETER POST TOTAL PROJECT	SHEET NO.	TOTAL SHEETS
04	SF	80			

REGISTERED ENGINEER - CIVIL

PROFESSIONAL ENGINEER — A.L.ELY — No. 18880 — Exp. 6-30-07 — CIVIL — STATE OF CALIFORNIA

PLANS APPROVAL DATE

The State of California or its officers or agents shall not be responsible for the accuracy or completeness of electronic copies of this plan sheet.

T.Y.LIN / MOFFATT & NICHOL
TWO HARRISON STREET
SAN FRANCISCO, CA 94105

FINAL SUBMITTAL

04-0120R4
SUPPLEMENTAL SHEET

CONTRACT CHANGE ORDER NO. 61
SHEET 33 OF 85

DESIGN OVERSIGHT - MIKE CULLEN	DESIGN	BY Desai	CHECKED Lee
SIGN OFF DATE	DETAILS	BY Lu	CHECKED Desai
Rev. Date: 5-18-98	QUANTITIES	BY Lee	CHECKED Birdy

PREPARED FOR THE STATE OF CALIFORNIA DEPARTMENT OF TRANSPORTATION

Jal Birdy
PROJECT ENGINEER

BRIDGE NO. 34-0006
KILOMETER POST 12.8

SAN FRANCISCO OAKLAND BAY BRIDGE
EAST SPAN SEISMIC SAFETY PROJECT

YBI VIADUCT REPLACEMENT / WEST TIE IN

STAGING AREA RETAINING WALL

TYPICAL WALL SECTIONS

ORIGINAL SCALE IN MILLIMETERS FOR REDUCED PLANS 0 10 20 30 40 50 60 70 80 90 100

CU 04
EA 0120P1

DISREGARD PRINTS BEARING EARLIER REVISION DATES

REVISION DATES (PRELIMINARY STAGE ONLY): 1/08/07 | 1/15/07 | 1/22/07

SHEET 4 OF 9

USERNAME => fsomson DATE PLOTTED => 1/19/2007 TIME PLOTTED => 1:32:26 PM

FILE => p:\4141-06\CADD\Temp Ret Wall 1\Final Submittal\rw1 TYPSEC.dgn

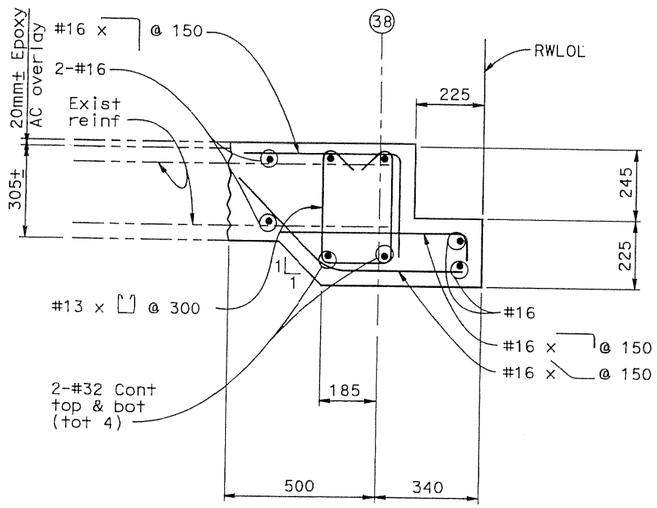

DETAIL A
1:10

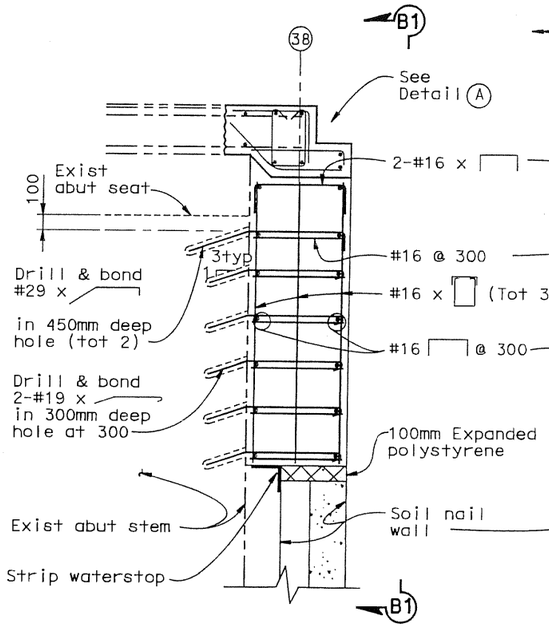

DETAIL B
1:20

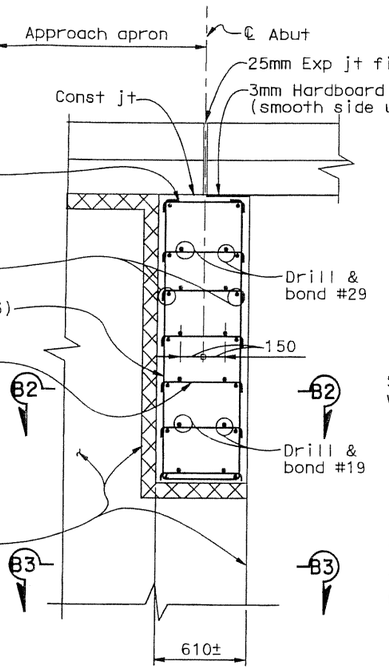

SECTION B1-B1
1:20

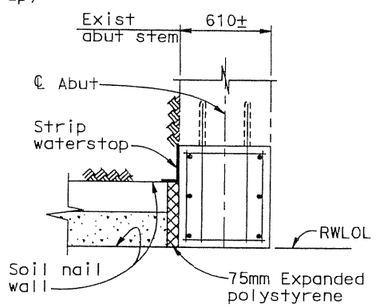

SECTION B2-B2
1:20

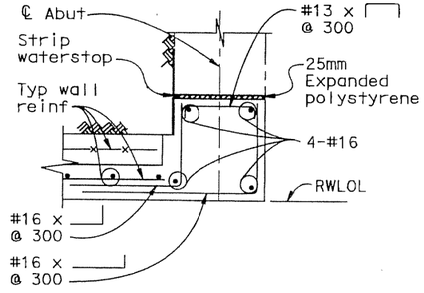

SECTION B3-B3
1:20

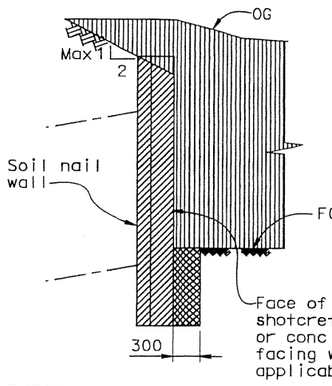

LEGEND:

- Structure Excavation (Soil Nail Wall)
- Structure Backfill (Soil Nail Wall)
- Roadway Excavation (See Road Plans)

EXCAVATION NOTE:

The maximum vertical excavation limit below the row of nails being installed shall not exceed ½ of the spacing to the next row of nails plus 0.150m except below the last row of nails to reach bottom of wall.

LIMITS OF PAYMENT FOR STRUCTURE EXCAVATION & BACKFILL

(For details not shown see A62B)

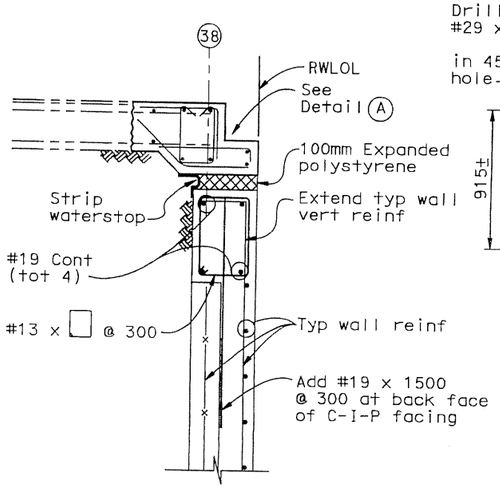

DETAIL C
1:20

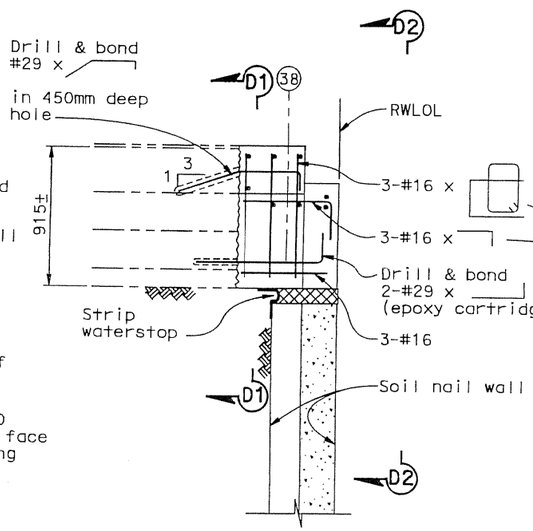

DETAIL D
1:20

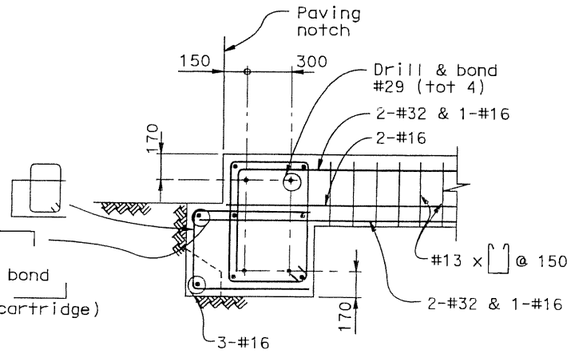

SECTION D1-D1
1:20

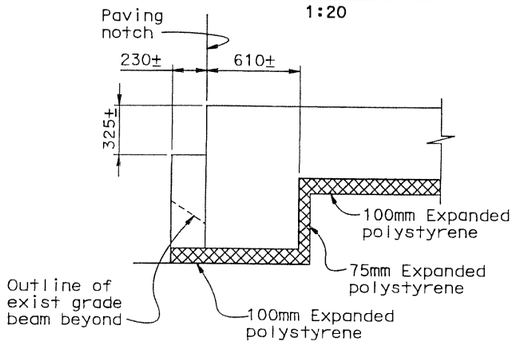

SECTION D2-D2
1:20

NOTE:
The Contractor shall verify all controlling field dimensions before ordering or fabricating any material or performing any work that might thereby be affected.

NOTE:

-For location of Details (A),(B),(C) & (D) see "Typical Wall Sections" sheet

-For Strip Waterstop Details see BO-1

ALL DIMENSIONS ARE IN MILLIMETERS UNLESS OTHERWISE SHOWN

DIST.	COUNTY	ROUTE	KILOMETER POST TOTAL PROJECT	SHEET NO.	TOTAL SHEETS
04	SF	80			

Caltrans Metric

REGISTERED ENGINEER - CIVIL

PLANS APPROVAL DATE

REGISTERED PROFESSIONAL ENGINEER — A.L.ELY — No. 18880 — Exp. 6-30-07 — CIVIL — STATE OF CALIFORNIA

The State of California or its officers or agents shall not be responsible for the accuracy or completeness of electronic copies of this plan sheet.

T.Y. LIN / MOFFATT & NICHOL
TWO HARRISON STREET
SAN FRANCISCO, CA 94105

SUPPLEMENTAL SHEET 04-0120R4

CONTRACT CHANGE ORDER NO. 61
SHEET 34 OF 85

FINAL SUBMITTAL
DATE PLOTTED => 1/19/2007 TIME PLOTTED => 11:33:01 PM
USERNAME => fgonson

DESIGN OVERSIGHT - MIKE CULLEN	DESIGN	BY Desai	CHECKED Lee	PREPARED FOR THE STATE OF CALIFORNIA DEPARTMENT OF TRANSPORTATION	Jal Birdy, PROJECT ENGINEER
SIGN OFF DATE	DETAILS	BY Lu	CHECKED Desai		
Rev. Date: 5-18-98	QUANTITIES	BY Lee	CHECKED Birdy		

ORIGINAL SCALE IN MILLIMETERS FOR REDUCED PLANS 0 10 20 30 40 50 60 70 80 90 100

CU 04
EA 0120P1

DISREGARD PRINTS BEARING EARLIER REVISION DATES

REVISION DATES (PRELIMINARY STAGE ONLY): 1/08/01 1/05/01 1/22/01

BRIDGE NO. 34-0006
KILOMETER POST 12.8
SHEET 5 OF 9

SAN FRANCISCO OAKLAND BAY BRIDGE
EAST SPAN SEISMIC SAFETY PROJECT

YBI VIADUCT REPLACEMENT / WEST TIE IN

STAGING AREA RETAINING WALL

MISCELLANEOUS WALL DETAILS

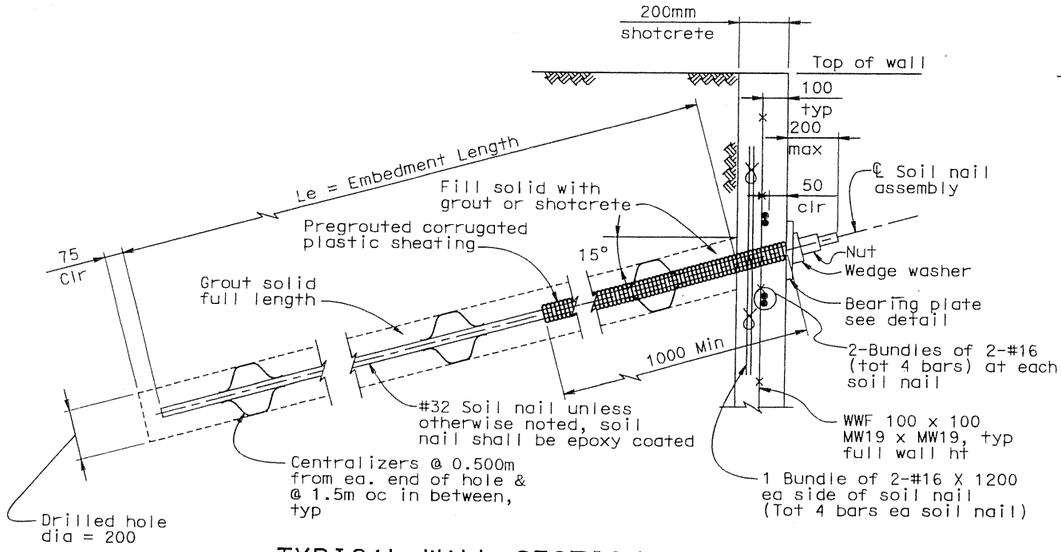

TYPICAL WALL SECTION

NO SCALE

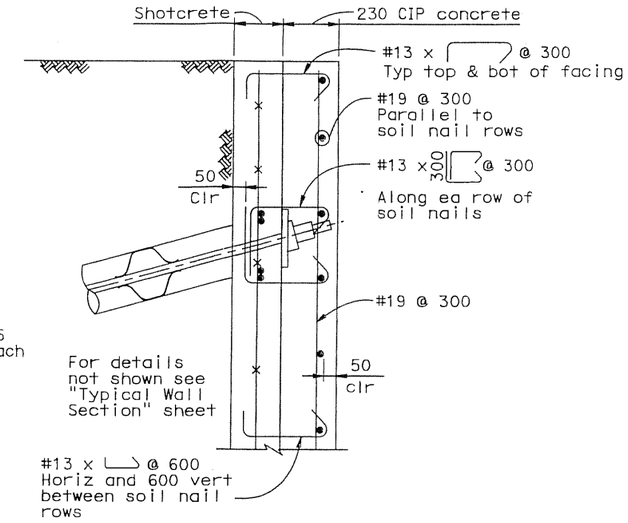

TYPICAL CONCRETE FACING DETAIL

NO SCALE

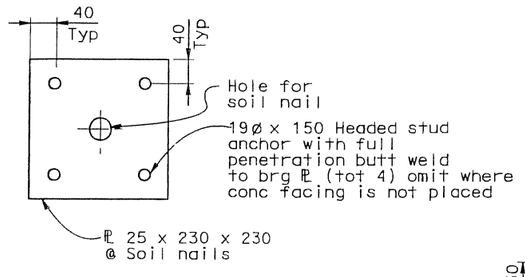

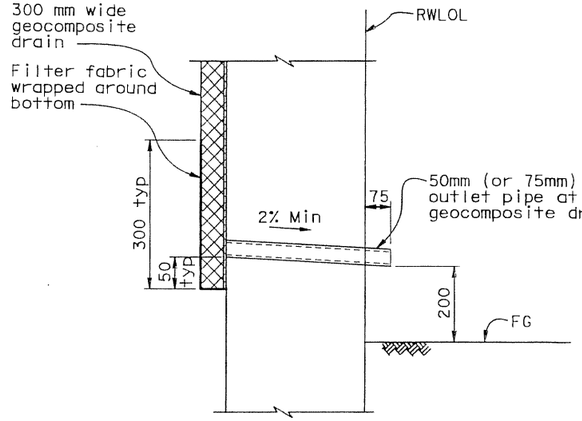

SECTION A-A

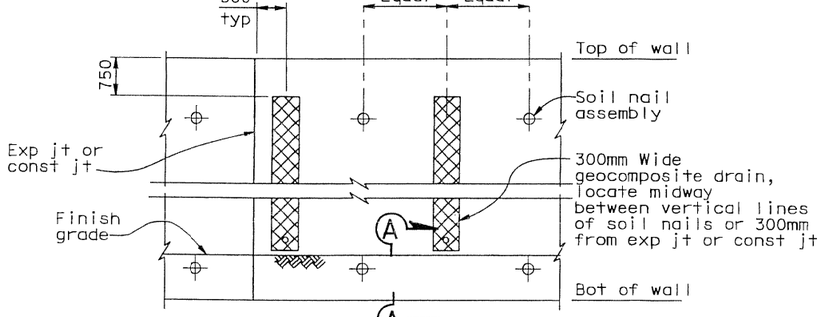

PARTIAL WALL ELEVATION

WALL DRAINAGE DETAILS

NO SCALE

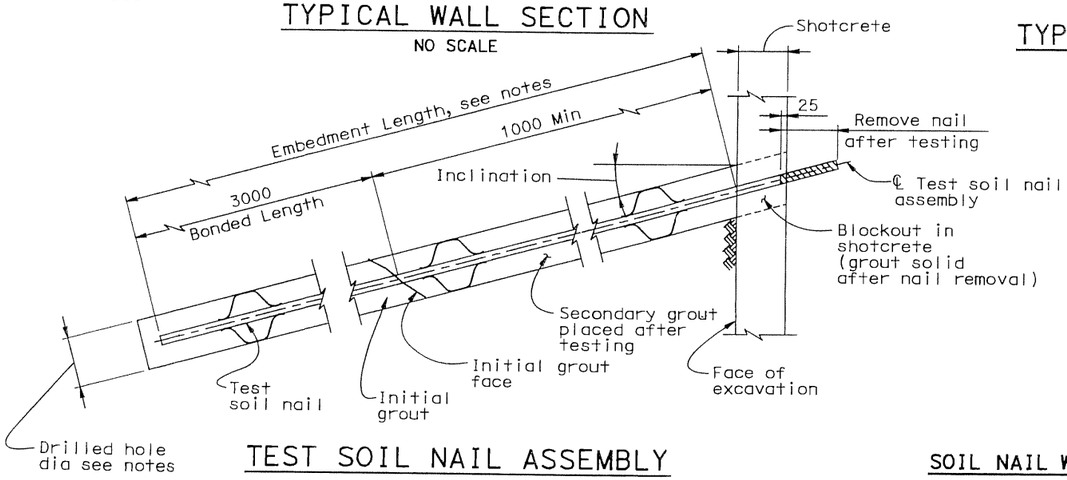

TEST SOIL NAIL ASSEMBLY

NO SCALE

TEST NAIL ASSEMBLY NOTES:

1. Diameter of test soil nail and drilled hole shall be same diameter as adjacent production nails.
2. Embedment length shall be 2/3 the embedment length of adjacent production soil nail assemblies, but not less than 4000 mm.
3. Total length of test soil nail assembly shall be embedment length plus the length required for jacking equipment.
4. The inclination of test soil nail assembly shall be the same as adjacent production soil nail assemblies.
5. The pullout test load for 200mm diameter drilled hole shall be 197 kN.
6. See other sheets for test nail locations. number of test nails shall be not less than 5 percent of the total number of production nails and each row of each wall shall have at least two test nails. Provide at least 2 test nails for each diameter of production nail.

BEARING PLATE DETAIL

1:5

SOIL NAIL WALL DESIGN DATA

Shotcrete: f'c = 22MPa

Soil Nails: ASTM Designation: A615/A615M OR A706/A706M, Epoxy Coated, fy = 420MPa

Soil Parameters:
Unit Weight = 19.6 kN/m3
Soil Friction Angle: 34 degrees
Cohesion: 2.4kPa
Ultimate Bond Stress = 70 kPa (between soil nail grout & drilled hole)

Design Loads:
D = Dead Load
LL = Live Load
E = Lateral Earth Pressure
EQE = Seismic Earth Load = 0.20g

Safety Factors: Minimum Factor Of Safety, DL + LL + E = 1.50
DL + E + EQE = 1.10

DIST.	COUNTY	ROUTE	KILOMETER POST TOTAL PROJECT	SHEET NO.	TOTAL SHEETS
04	SF	80			

REGISTERED ENGINEER - CIVIL
A.L.ELY No. 18880 Exp. 6-30-07 CIVIL
REGISTERED PROFESSIONAL ENGINEER STATE OF CALIFORNIA
PLANS APPROVAL DATE

The State of California or its officers or agents shall not be responsible for the accuracy or completeness of electronic copies of this plan sheet.

T.Y. LIN / MOFFATT & NICHOL
TWO HARRISON STREET
SAN FRANCISCO, CA 94105

SUPPLEMENTAL SHEET 04-0120R4

CONTRACT CHANGE ORDER NO. 61

SHEET 35 OF 85

FINAL SUBMITTAL

USERNAME => tsamson DATE PLOTTED => 1/19/2007 TIME PLOTTED => 1:34:08 PM

ALL DIMENSIONS ARE IN MILLIMETERS UNLESS OTHERWISE SHOWN

SAN FRANCISCO OAKLAND BAY BRIDGE
EAST SPAN SEISMIC SAFETY PROJECT

YBI VIADUCT REPLACEMENT / WEST TIE IN

STAGING AREA RETAINING WALL

SOIL NAIL WALL DETAILS

DESIGN OVERSIGHT - MIKE CULLEN
SIGN OFF DATE
Rev. Date: 5-18-98

	BY	CHECKED
DESIGN	Desai	Lee
DETAILS	Lu	Desai
QUANTITIES	Lee	Birdy

PREPARED FOR THE STATE OF CALIFORNIA DEPARTMENT OF TRANSPORTATION

Jal Birdy
PROJECT ENGINEER

BRIDGE NO. 34-0006
KILOMETER POST 12.8

ORIGINAL SCALE IN MILLIMETERS FOR REDUCED PLANS 0 10 20 30 40 50 60 70 80 90 100

CU 04
EA 0120P1

DISREGARD PRINTS BEARING EARLIER REVISION DATES

REVISION DATES (PRELIMINARY STAGE ONLY) 1/08/07 1/15/07 1/22/07

SHEET 6 OF 9

CONTRACT NO. 04-0120R4

CONTRACT CHANGE ORDER NO. 61

SHEET 36 OF 85

Caltrans Metric

DIST	COUNTY	ROUTE	KILOMETER POST TOTAL PROJECT	SHEET No	TOTAL SHEETS
04	SF	80			

GEOTECHNICAL PROFESSIONAL 01/23/07

PLANS APPROVAL DATE

The State of California or its officers or agents shall not be responsible for the accuracy or completeness of electronic copies of this plan sheet.

REGISTERED PROFESSIONAL ENGINEER MIKE KAPUSKAR NO. GE 2564 EXP. 12-31-08 GEOTECHNICAL STATE OF CALIFORNIA

FUGRO-EARTH MECHANICS
7700 EDGEWATER DR, SUITE 846
OAKLAND, CA 94621

LEGEND OF BORING OPERATIONS

IN-SITU, LAB & FIELD TEST DESIGNATIONS

- (AL) Atterberg Limits
- (CA) Corrosivity
- (CN) Consolidation
- (MD) Maximum Density
- (DS) Direct Shear
- (R) R-Value
- (PP) Pocket Penetrometer
- (SA) Grain Size
- (SE) Sand Equivalent
- (UC) Unconfined Compression
- (UU) Unconsolidated Undrained Triaxial
- (W) Wash Analysis

TYPE OF BORINGS

- 57 MM CONE PENETRATION
- ROTARY WASH
- ELECTRONIC CONE PENETROMETER
- AUGER BORING(DRY)
- TEST PIT
- DIAMOND CORE BORING
- SOIL TUBE

LEGEND FOR EARTH MATERIALS (USCS) BASED ON ASTM D2487, D2488

FILL MATERIAL; CLAY (CL or CH); SILT (ML or MH); PEAT and/or ORGANIC MATTER; WELL-GRADED GRAVEL (GW); POORLY GRADED GRAVEL (GP); SILTY GRAVEL (GM); CLAYEY GRAVEL (GC); POORLY-GRADED SAND (SP); WELL GRADED SAND (SW); SILTY SAND (SM) or SANDY SILT; COBBLES AND BOULDERS; CLAYEY SAND (SC) or SANDY CLAY; IGNEOUS ROCK; SEDIMENTARY ROCK; METAMORPHIC ROCK

NOTE: Visual classification of earth materials are based on field inspection and are confirmed or revised with laboratory test results as necessary.

CONSISTENCY CLASSIFICATION FOR SOILS
According to the Standard Penetration Test (ASTM D-1586)

SPT N-Value (Blows/305mm)	Granular	SPT N-Value (Blows/305mm)	Cohesive
0-4	Very Loose	<2	Very Soft
5-10	Loose	2-4	Soft
11-30	Medium Dense	5-8	Firm
31-50	Dense	9-15	Stiff
>50	Very Dense	16-30	Very Stiff
		>30	Hard

WEATHERING DESCRIPTORS

Modified from United States Bureau of Reclamation, Engineering Geology Field Manual.

Alphanumeric descriptor	Descriptive term	Chemical weathering-Discoloration and/or oxidation: Body of rock	Chemical weathering: Fracture surfaces†	Mechanical weathering-Grain boundary conditions (disaggregation) primarily for granitics and some coarse-grained sediments	Texture and solutioning: Texture	Texture and solutioning: Solutioning	General characteristics (strength, excavation, etc.) §
W1	Fresh	No discoloration, not oxidized.	No discoloration or oxidation.	No separation, intact (tight).	No change.	No solutioning.	Hammer rings when crystalline rocks are struck. Almost always rock excavation except for naturally weak or weakly cemented rocks such as siltstones or shales.
W2	Slightly weathered to fresh°						
W3	Slightly weathered	Discoloration or oxidation is limited to surface of, or short distance from, fractures; some feldspar crystals are dull.	Minor to complete discoloration or oxidation of most surfaces.	No visible separation, intact (tight).	Preserved.	Minor leaching of some soluble minerals may be noted.	Hammer rings when crystalline rocks are struck. Body of rock not weakened. With few exceptions, such as siltstones or shales, classified as rock excavation.
W4	Moderately to slightly weathered °						
W5	Moderately weathered	Discoloration or oxidation extends from fractures usually throughout; Fe-Mg minerals are "rusty," feldspar crystals are "cloudy."	All fracture surfaces are discolored or oxidized.	Partial separation of boundaries visible.	Generally preserved.	Soluble minerals may be mostly leached.	Hammer does not ring when rock is struck. Body of rock is slightly weakened. Depending on fracturing, usually is rock excavation except in naturally weak rocks such as siltstones or shales.
W6	Intensely to moderately weathered°						
W7	Intensely weathered	Discoloration or oxidation throughout; all feldspars and Fe-Mg minerals are altered to clay to some extent; or chemical alteration produces in-situ disaggregation, see grain boundary conditions.	All fracture surfaces are discolored or oxidized, surfaces friable.	Partial separation, rock is friable; in semiarid conditions granitics are disaggregated.	Texture altered by chemical disintegration (hydration, argillation).	Leaching of soluble minerals may be complete.	Dull sound when struck with hammer, usually can be broken with moderate to heavy manual pressure or by light hammer blow without reference to planes of weakness such as incipient or hairline fractures, or veinlets. Rock is significantly weakened. Usually common excavation.
W8	Very intensely weathered						
W9	Decomposed	Discolored or oxidized throughout, but resistant minerals such as quartz may be unaltered; all feldspars and Fe-Mg minerals are completely altered to clay.		Complete separation of grain boundaries (disaggregated).	Resembles a soil, partial or complete remnant rock structure may be preserved; leaching of soluble minerals usually complete.		Can be granulated by hand. Always common excavation. Resistant minerals such as quartz may be present as "stringers" or "dikes."

Note: This chart and its horizontal categories are more readily applied to rocks with feldspars and mafic minerals. Weathering in various sedimentary rocks, particularly limestones and poorly indurated sediments, will not always fit the categories established. This chart and weathering categories may have to be modified for particular site conditions or alteration such as hydrothermal effects; however, the basic framework and similar descriptors are to be used.

° Combination descriptors are permissible where equal distribution of both weathering characteristics are present over significant intervals or where characteristics present are "in between" the diagnostic feature. However, dual descriptors should not be used where significant, identifiable zones can be delineated. When given as a range only two adjacent terms may be combined. "Decomposed to slightly weathered," or "moderately weathered to fresh" are not acceptable.

† Does not include directional weathering along shears or faults and their associated features. For example, a shear zone that carried weathering to great depths into a fresh rock mass would not require the rock mass to be classified as weathered.

§ These are generalizations and should not be used as diagnostic features for weathering or excavation classification. These characteristics vary to a large extent based on naturally weak materials or cementation and type of excavation.

ROCK QUALITY DESIGNATION (RQD) & PERCENT RECOVERY (REC) LOGGING

RQD (ROCK QUALITY DESIGNATION)	DESCRIPTION OF ROCK QUALITY
0 - 25%	VERY POOR
25 - 50%	POOR
50 - 75%	FAIR
75 - 90%	GOOD
90 - 100%	EXCELLENT

REC = Percent Core Recovery

$$REC = \frac{\sum \text{Length of all core pieces}}{\text{Total core run length}}$$

$$RQD = \frac{\sum \text{Length of sound core pieces} \geq 100 \text{ mm}}{\text{Total core run length}}$$

$$RQD = \frac{250+190+200}{1200} \times 100\%$$

RQD = 53% (fair)

(No Scale)
After Deere & Deere, 1989

FRACTURE DENSITY

Modified from United States Bureau of Reclamation, Engineering Geology Field Manual.

FRACTURE DENSITY- Based on the spacing of all natural fractures in an exposure or core recovery lengths in boreholes; excludes mechanical breaks, shears, and shear zones; however, shear-disturbed zones (fracturing outside the shear) are included. Descriptors for fracture density apply to all rock exposures such as tunnel walls, dozer trenches, outcrops, or foundation cut slopes and inverts, as well as boreholes. Descriptive criteria presented below are based on borehole cores where lengths are measured along the core axis, for other exposures the criteria is distance measured between fractures (size of blocks).

UNFRACTURED (FD0): No fractures.

VERY SLIGHTLY FRACTURED (FD1): Core recovered mostly in lengths greater than 1 m.

SLIGHTLY TO VERY SLIGHTLY FRACTURED (FD2)*

SLIGHTLY FRACTURED (FD3): Core recovered mostly in lengths from 300 to 1000 mm, with few scattered lengths less than 300 mm or greater than 1000 mm.

MODERATELY TO SLIGHTLY FRACTURED (FD4)*

MODERATELY FRACTURED (FD5): Core recovered mostly in 100 to 300 mm lengths with most lengths about 200 mm.

INTENSELY TO MODERATELY FRACTURED (FD6)*

INTENSELY FRACTURED (FD7): Lengths average from 30 to 100 mm with scattered fragmented intervals. Core recovered mostly in lengths less than 100 mm.

VERY INTENSELY TO INTENSELY FRACTURED (FD8)*

VERY INTENSELY FRACTURED (FD9): Core recovered mostly as chips and fragments with a few scattered short core lengths.

* Combinations of fracture densities (e.g. very intensely to intensely fractured, or moderately to slightly fractured) are used where equal distribution of both fracture density characteristics are present over a significant interval or exposure, or where characteristics are "in between" the descriptor definitions.

ROCK HARDNESS DESCRIPTORS

Alphanumeric Descriptor	Descriptor	Criteria
H1	Extremely hard	Core, fragment, or exposure cannot be scratched with knife or sharp pick; can only be chipped with repeated heavy hammer blows.
H2	Very hard	Cannot be scratched with knife of sharp pick. Core or fragment breaks with repeated heavy hammer blows.
H3	Hard	Can be scratched with knife or sharp pick with difficulty (heavy pressure). Heavy hammer blow required to break specimen.
H4	Moderately hard	Can be scratched with knife or sharp pick with light or moderate pressure. Core or fragment breaks with moderate hammer blow.
H5	Moderately soft	Can be grooved 2 mm deep by knife or sharp pick with moderate or heavy pressure. Core or fragment breaks with light hammer blow or heavy manual pressure.
H6	Soft	Can be grooved or gouged easily by knife or sharp pick with light pressure, can be scratched with fingernail. Breaks with light to moderate manual pressure.
H7	Very soft	Can be readily indented, grooved or gouged with fingernail, or carved with a knife. Breaks with light manual pressure.

Any bedrock unit softer than H7, very soft, is to be described using ASTM D-2488 consistency descriptors.

Note: Although "sharp pick" is included in these definitions, descriptions of ability to be scratched, grooved or gouged by a knife is the preferred criteria.

Modified from United States Bureau of Reclamation, Engineering Geology Field Manual.

BEDDING, FOLIATION, OR FLOW TEXTURE DESCRIPTORS

Descriptors	Thickness / Spacing
Massive	Greater than 3 m
Very thickly (bedded, foliated, or banded)	1 to 3 m
Thickly	300 mm to 1 m
Moderately	100 to 300 mm
Thinly	30 to 100 mm
Very thinly	10 to 30 mm
Laminated (intensely foliated or banded)	Less than 10 mm

Modified from United States Bureau of Reclamation, Engineering Geology Field Manual.

FINAL SUBMITTAL

DESIGN OVERSIGHT	DRAWN BY	J. CASTLE	11/28/06
SIGN OFF DATE	CHECKED BY	M. KAPUSKAR	01/05/07

NA
FIELD INVESTIGATION BY:
DATE: NA

PREPARED FOR THE STATE OF CALIFORNIA DEPARTMENT OF TRANSPORTATION

M. KAPUSKAR
PROJECT ENGINEER

BRIDGE NO. 34-0006
KILOMETER POST 12.8

YBI VIADUCT REPLACEMENT / WEST TIE IN
STAGING AREA RETAINING WALL
LOG OF TEST BORINGS NO. 1

GEOTECHNICAL LOG OF TEST BORINGS SHEET (METRIC) (REV 2/1/00)

ORIGINAL SCALE IN MILLIMETERS FOR REDUCED PLANS 0 10 20 30 40 50 60 70 80 90 100

CU 04
EA 0120P1

DISREGARD PRINTS BEARING EARLIER REVISION DATES

REVISION DATES (PRELIMINARY STAGE ONLY)

SHEET 7 OF 9

USERNAME => fsamson DATE PLOTTED => 1/24/2007 TIME PLOTTED => 3:04:26 PM

FILE => p:\4141-06\CADD\Temp Ret Wall 1\...

DIST	COUNTY	ROUTE	KILOMETER POST TOTAL PROJECT	SHEET No	TOTAL SHEETS
04	SF	80			

Caltrans Metric

GEOTECHNICAL PROFESSIONAL 01/23/07

REGISTERED PROFESSIONAL ENGINEER — MIKE KAPUSKAR — NO. GE 2564 EXP. 12-31-08 — GEOTECHNICAL — STATE OF CALIFORNIA

PLANS APPROVAL DATE

The State of California or its officers or agents shall not be responsible for the accuracy or completeness of electronic copies of this plan sheet.

FUGRO-EARTH MECHANICS
7700 EDGEWATER DR, SUITE 846
OAKLAND, CA 94621

CONTRACT NO. 04-0120R4

CONTRACT CHANGE ORDER NO. 61

SHEET 37 OF 85

LEGEND OF BORING OPERATIONS

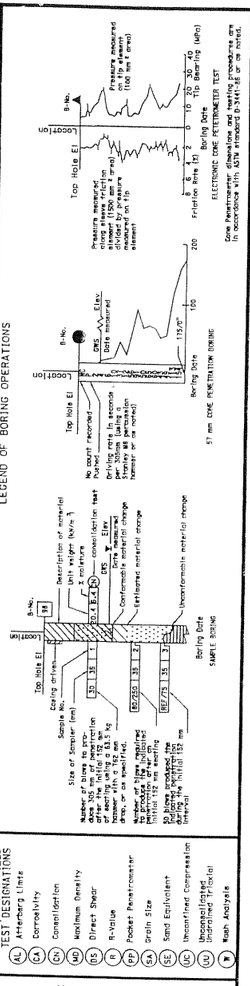

IN-SITU, LAB & FIELD TEST DESIGNATIONS

AL	CN	CR	CO	MD	DS	HV	PP	SA	SE	UC	UU	MA
Atterberg Limits	Corrosivity	Consolidation	Compaction	Maximum Density	Direct Shear	R-Value	Pocket Penetrometer	Grain Size	Sand Equivalent	Unconfined Compression	Unconsolidated Undrained Triaxial	Mech Analysis

TYPE OF BORINGS

ST 140 FOOT PENETRATION	ROTARY WASH	ELECTRONIC CONE PENETROMETER	AUGER (CME 75 POWER AUGER)	TEST PIT	DIAMOND CORE BORING	SOIL TUBE	
	RW	ET	AU		DB	ST	

LEGEND FOR EARTH MATERIALS (USCS) BASED ON ASTM D2487, D2488

FILL MATERIAL	CLAY (CL or CH)	SILT (ML or MH)	PEAT and/or ORGANIC MATTER	WELL-GRADED GRAVEL (GW)	POORLY GRADED GRAVEL (GP)	SILTY GRAVEL (gm)	CLAYEY GRAVEL (gc)	POORLY-GRADED SAND (SP)	WELL GRADED SAND (SW)	SILTY SAND (SM) or SANDY SILT	CLAYEY SAND (SC) or SANDY CLAY	IGNEOUS ROCK	SEDIMENTARY ROCK	METAMORPHIC ROCK	COBBLES AND BOULDERS

CONSISTENCY CLASSIFICATION FOR SOILS According to the Standard Penetration Test (ASTM D-1586)

	Cohesive		Granular	
SPT N-Value (Blows/ 300mm)		SPT N-Value (Blows/ 300mm)		
<2	Very Soft	0-4	Very Loose	
2-4	Soft	5-10	Loose	
5-8	Firm	11-30	Medium Dense	
9-15	Stiff	31-50	Dense	
16-30	Very Stiff	>50	Very Dense	
>30	Hard			

NOTE: Visual classification of earth materials are based on field inspection and are confirmed or revised with laboratory test results as necessary.

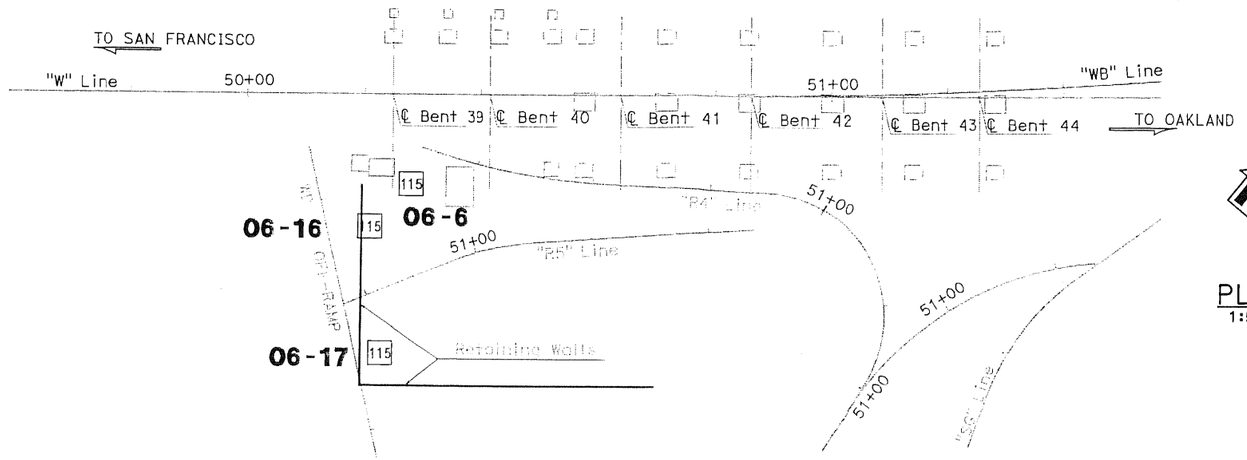

PLAN
1:500

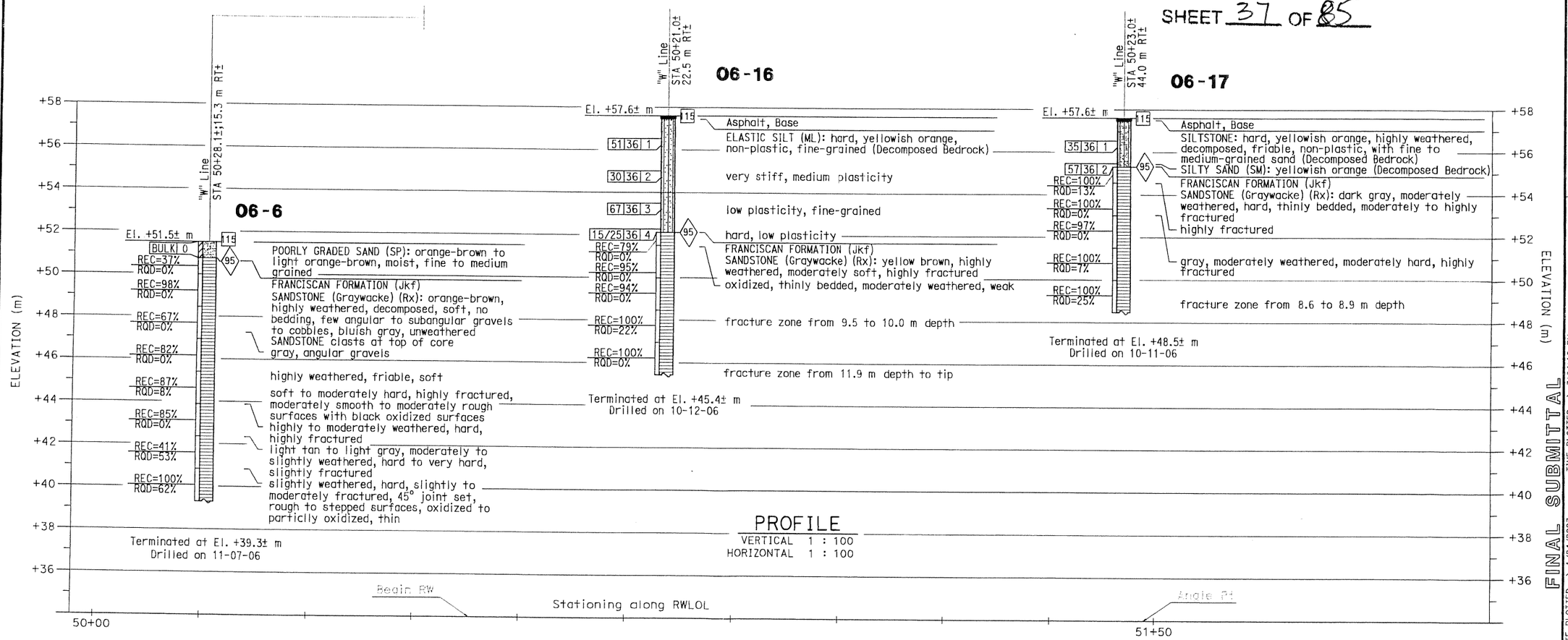

PROFILE
VERTICAL 1 : 100
HORIZONTAL 1 : 100

ALL DIMENSIONS ARE IN METERS UNLESS OTHERWISE SHOWN

DESIGN OVERSIGHT	DRAWN BY	J. CASTLE	12/23/07	M. THAN, V. KHOTAN	
SIGN OFF DATE	CHECKED BY	M. KAPUSKAR	01/23/07	FIELD INVESTIGATION BY:	
				DATE: AS NOTED	

PREPARED FOR THE STATE OF CALIFORNIA DEPARTMENT OF TRANSPORTATION

M. KAPUSKAR
PROJECT ENGINEER

BRIDGE NO.	34-0006
KILOMETER POST	12.8

YBI VIADUCT REPLACEMENT / WEST TIE IN

STAGING AREA RETAINING WALL

LOG OF TEST BORINGS NO. 2

GEOTECHNICAL LOG OF TEST BORINGS SHEET (METRIC) (REV 2/1/00)

ORIGINAL SCALE IN MILLIMETERS FOR REDUCED PLANS 0 10 20 30 40 50 60 70 80 90 100

CU 04
EA 0120P1

DISREGARD PRINTS BEARING EARLIER REVISION DATES

REVISION DATES (PRELIMINARY STAGE ONLY)										SHEET	OF
01/23/07										8	9

FILE => p:\4141-06\CADD\Temp Ret Wall 1\Final Submittal\llfb02.dgn

USERNAME => fsamson DATE PLOTTED => 1/24/2007 TIME PLOTTED => 3:04:10 PM

FINAL SUBMITTAL

DIST	COUNTY	ROUTE	KILOMETER POST TOTAL PROJECT	SHEET No	TOTAL SHEETS
04	SF	80			

Caltrans Metric

01/23/07
GEOTECHNICAL PROFESSIONAL

REGISTERED PROFESSIONAL ENGINEER — MIKE KAPUSKAR — NO. GE 2564 EXP. 12-31-08 — GEOTECHNICAL — STATE OF CALIFORNIA

PLANS APPROVAL DATE

The State of California or its officers or agents shall not be responsible for the accuracy or completeness of electronic copies of this plan sheet.

FUGRO-EARTH MECHANICS
7700 EDGEWATER DRIVE, SUITE 846
OAKLAND, CA 94621

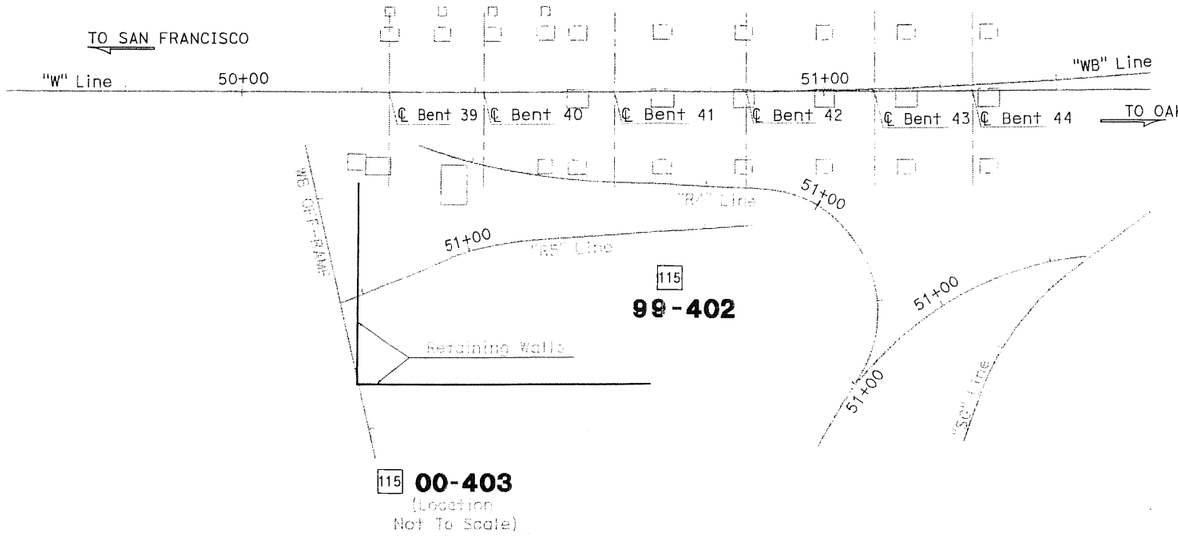

PLAN
1:500

CONTRACT NO. 04-0120R4

CONTRACT CHANGE ORDER NO. 61

SHEET 38 OF 85

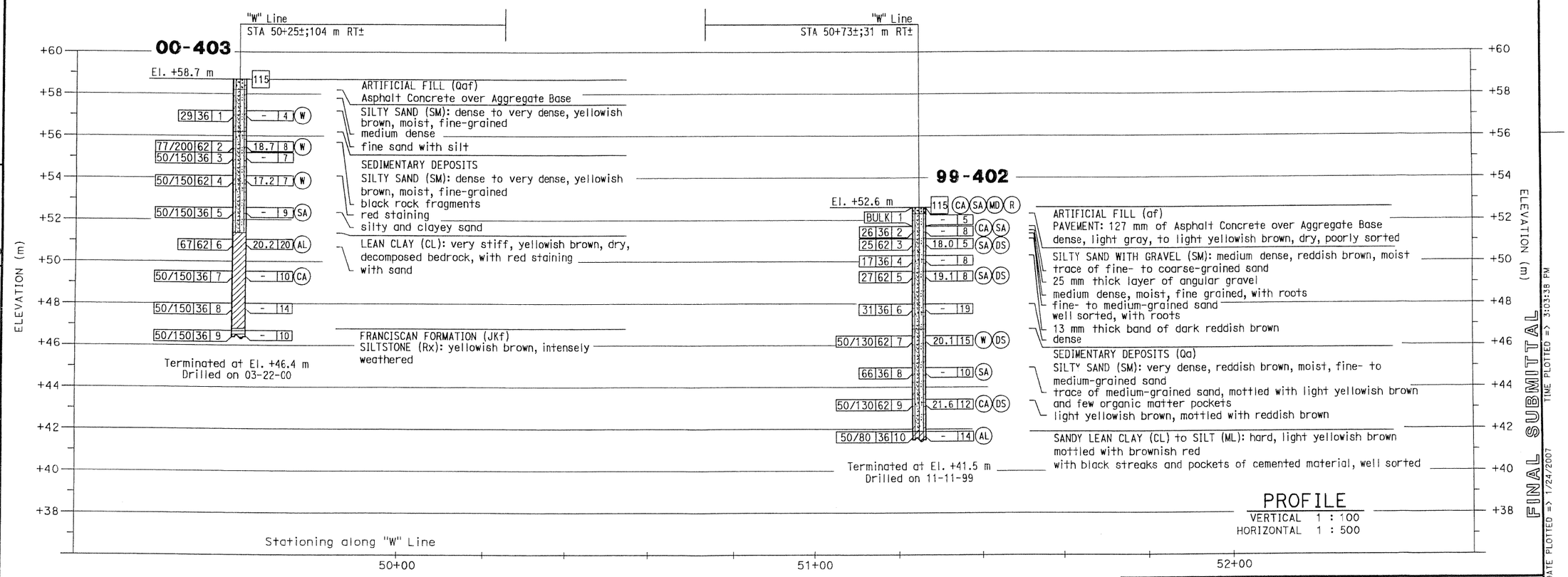

PROFILE
VERTICAL 1 : 100
HORIZONTAL 1 : 500

FINAL SUBMITTAL

TIME PLOTTED => 3:03:38 PM
DATE PLOTTED => 1/24/2007
USERNAME => fsomson

LEGEND OF BORING OPERATIONS

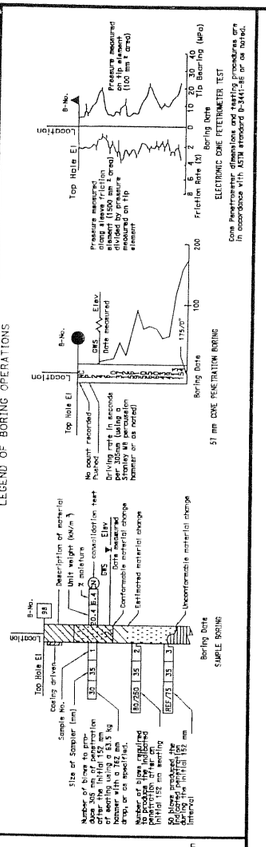

IN-SITU, LAB & FIELD TEST DESIGNATIONS

(AL) Atterberg Limits	(CN) Corrosivity	(CN) Consolidation	(MD) Maximum Density	(DS) Direct Shear	(R) R-Value	(PP) Pocket Penetrometer	(GS) Grain Size	(SE) Sand Equivalent	(UC) Unconfined Compression	(UU) Unconsolidated Undrained Triaxial	(K) Wash Analysis

TYPE OF BORINGS

CPT 144 mm CONE PENETRATION	ROTARY WASH	ELECTRONIC CONE PENETROMETER	AUGER BORING(DRY)	TEST PIT	DIAMOND CORE BORING	SOIL TUBE	

LEGEND FOR EARTH MATERIALS (USCS) BASED ON ASTM D2487, D2488

FILL MATERIAL; CLAY (CL or CH); SILT (ML or MH); SILTY SAND (SM) or SANDY SILT; COBBLES AND BOULDERS; POORLY-GRADED SAND (SP); WELL GRADED SAND (SW); CLAYEY SAND (SC) or SANDY CLAY; IGNEOUS ROCK; SEDIMENTARY ROCK; METAMORPHIC ROCK; PEAT and/or HIGHLY ORGANIC SILT; WELL-GRADED GRAVEL (GW); POORLY GRADED GRAVEL (GP); SILTY GRAVEL (GM); CLAYEY GRAVEL (GC)

CONSISTENCY CLASSIFICATION FOR SOILS
According to the Standard Penetration Test (ASTM D-1586)

SPT N-Value (Blows/305mm)	Granular	SPT N-Value (Blows/305mm)	Cohesive
0-4	Very Loose	<2	Very Soft
5-10	Loose	2-4	Soft
11-30	Medium Dense	5-8	Firm
31-50	Dense	9-15	Stiff
>50	Very Dense	16-30	Very Stiff
		>30	Hard

NOTE: Visual classification of earth materials are based on field inspection and are confirmed or revised with laboratory test results as necessary.

ALL DIMENSIONS ARE IN METERS UNLESS OTHERWISE SHOWN

DESIGN OVERSIGHT	DRAWN BY	G. J. GUNARANJAN 01/03/07	S. SICILIANO, L. FLUKE	PREPARED FOR THE STATE OF CALIFORNIA DEPARTMENT OF TRANSPORTATION	M. KAPUSKAR
SIGN OFF DATE	CHECKED BY	M. KAPUSKAR 01/05/07	FIELD INVESTIGATION BY: DATE: AS NOTED		PROJECT ENGINEER

BRIDGE NO.	YBI VIADUCT REPLACEMENT / WEST TIE IN
34-0006	STAGING AREA RETAINING WALL
KILOMETER POST 12.8	LOG OF TEST BORINGS NO. 3

GEOTECHNICAL LOG OF TEST BORINGS SHEET (METRIC) (REV 2/1/00)

ORIGINAL SCALE IN MILLIMETERS FOR REDUCED PLANS 0 10 20 30 40 50 60 70 80 90 100

CU 04
EA 0120P1

DISREGARD PRINTS BEARING EARLIER REVISION DATES →

REVISION DATES (PRELIMINARY STAGE ONLY)

SHEET 9 OF 9

FILE => p:\4141-06\CADD\Temp Ret Wall 1\Final Submittal\llb03.dgn

RECEIVED
FEB 05 2007
CONDON-JOHNSON

CONTRACT NO. 04-0120R4

The special provisions contained herein have been prepared by or under the direction of the following Registered Persons.

STRUCTURES

Steve Margaris

REGISTERED CIVIL ENGINEER

REGISTERED PROFESSIONAL ENGINEER
STEVE MARGARIS
No. 36845
Exp. 7/22/08
CIVIL
STATE OF CALIFORNIA

CONTRACT NO. 04-0120R4

CONTRACT CHANGE ORDER NO. 61

SHEET 39 OF 85

(Copied from SAS Bid Package 02/03/03)

5-1.01 WORKING DRAWINGS

Working drawings shall conform to the requirements in Section 5-1.02 " Plans and Working Drawings," of the Standard Specifications and these special provisions. Working drawings shall include supplements and calculations that are in addition to drawings.

Working drawings shall be submitted to the following location:

California Department of Transportation
Office of the Resident Engineer, Contract 04-0120F4
345 Burma Rd.
Oakland, CA 94607

Working drawings shall conform to the following:

A. For initial review, 6 sets of the working drawings, shall be submitted. After the Engineer has determined that a submittal is complete, 12 additional sets shall be submitted.
B. Drawings shall be 559 mm x 864 mm or 279 mm x 432 mm in size. Supplements and calculations shall be 215 mm x 280 mm in size.
C. For drawings, text size shall be nominally 2.8 mm high, minimum. For supplement and calculations, font size shall be 12, minimum.
D. Each working drawing sheet and each page of supplement or calculation, shall include the jobsite name of the structure as shown on the contract plans, District-County-Route-Kilometer Post, bridge number and contract number.
E. Text and details shall be legible and suitable for photocopying and reduction.
F. In addition to the paper copies of the working drawings, electronic files shall be submitted. Electronic files shall be portable document format (PDF) and shall be submitted on compact disk (CD) media. Each plan sheet shall be a separate PDF file on the CD. The electronic copy of the calculations and supplement shall be made into separate PDF files so that no more than 50 pages are included in a single file on the CD. The CD shall contain an index consisting of the file names and a description of the corresponding file contents. The files shall be listed in the sequence of: 1) index, 2) drawings, 3) supplement, and 4) calculations. If more than one CD is used for a given working drawing submittal, the index shall be included on each CD.
G. Microfilms are required for approved shop drawings and shall be only a 24x reduction. The edge of the corrected original tracing image shall be clearly visible and visually parallel with the edges of the page. A clear, legible symbol shall be provided on the upper left side of each page to show the amount of reduction, and a horizontal and vertical scale shall be provided on each reduced print to facilitate enlargement to original scale.
H. At the completion of the contract, one compiled set of all approved working drawings (in electronic form and including all corrections and revisions) shall be furnished to the Engineer. The index shall be the first file on the CD.
I. At the completion of the contract, one set of reduced prints on 75-g/m2 (minimum) bond paper, 279 mm x 432 mm in size, of the corrected original tracings of all approved working drawings, including all corrections and revisions shall be furnished to the Engineer. Reduced prints that are common to more than one structure shall be submitted

CONTRACT NO. 04-0120F4
CONTRACT CHANGE ORDER NO. 61
SHEET 41 OF 85

Plans of the existing bridges may be requested by fax from the Office of Structure Maintenance and Investigations, 1801 30th Street, Sacramento, CA, Fax (916) 227-8357.

Plans of the existing bridges available to bidders and Contractors are reproductions of the original contract plans, with significant changes noted, and working drawings, and do not necessarily show normal construction tolerances and variances. Where dimensions of new construction required by this contract are dependent on the dimensions of the existing bridges, the Contractor shall verify the controlling field dimensions and shall be responsible for adjusting dimensions of the work to fit existing conditions.

SECTION 8. MATERIALS

8-1.01 SUBSTITUTION OF NON-METRIC MATERIALS AND PRODUCTS

Only materials and products conforming to the requirements of the specifications shall be incorporated in the work. When metric materials and products are not available, and when approved by the Engineer, and at no cost to the State, materials and products in the United States Standard Measures which are of equal quality and of the required properties and characteristics for the purpose intended, may be substituted for the equivalent metric materials and products, subject to the following provisions:

A. Materials and products shown on the plans or in the special provisions as being equivalent may be substituted for the metric materials and products specified or detailed on the plans.

B. Before other non-metric materials and products will be considered for use, the Contractor shall furnish, at the Contractor's expense, evidence satisfactory to the Engineer that the materials and products proposed for use are equal to or better than the materials and products specified or detailed on the plans. The burden of proof as to the quality and suitability of substitutions shall be upon the Contractor and the Contractor shall furnish necessary information as required by the Engineer. The Engineer will be the sole judge as to the quality and suitability of the substituted materials and products and the Engineer's decision will be final.

C. When the Contractor elects to substitute non-metric materials and products, including materials and products shown on the plans or in the special provisions as being equivalent, the list of sources of material specified in Section 6-1.01, "Source of Supply and Quality of Materials," of the Standard Specification shall include a list of substitutions to be made and contract items involved. In addition, for a change in design or details, the Contractor shall submit plans and working drawings in conformance with the provisions in Section 5-1.02, "Plans and Working Drawings," of the Standard Specifications. The plans and working drawings shall be submitted at least 7 days before the Contractor intends to begin the work involved.

CONTRACT NO. 04-012024
CONTRACT CHANGE ORDER NO. 61
SHEET 42 OF 85

SUBSTITUTION TABLE FOR SIZES OF:

(1) STEEL FASTENERS FOR GENERAL APPLICATIONS (ASTM Designation: A 307 or AASHTO Designation: M 314, Grade 36 or 55), and

(2) HIGH STRENGTH STEEL FASTENERS (ASTM Designation: A 325 or A 449)

METRIC SIZE SHOWN ON THE PLANS mm	SIZE TO BE SUBSTITUTED inch
6 or 6.35	1/4
8 or 7.94	5/16
10 or 9.52	3/8
11 or 11.11	7/16
13, 12.70, or M12	1/2
14 or 14.29	9/16
16, 15.88, or M16	5/8
19, 19.05, or M20	3/4
22, 22.22, or M22	7/8
24, 25, 25.40, or M24	1
29, 28.58, or M27	1-1/8
32, 31.75, or M30	1-1/4
35 or 34.93	1-3/8
38, 38.10, or M36	1-1/2
44 or 44.45	1-3/4
51 or 50.80	2
57 or 57.15	2-1/4
64 or 63.50	2-1/2
70 or 69.85	2-3/4
76 or 76.20	3
83 or 82.55	3-1/4
89 or 88.90	3-1/2
95 or 95.25	3-3/4
102 or 101.60	4

CONTRACT NO. 04-0120R4

CONTRACT CHANGE ORDER NO. 61

SHEET 45 OF 85

SUBSTITUTION TABLE FOR WIRE

METRIC THICKNESS SHOWN ON THE PLANS mm	WIRE THICKNESS TO BE SUBSTITUTED inch	GAGE NO.
6.20	0.244	3
5.72	0.225	4
5.26	0.207	5
4.88	0.192	6
4.50	0.177	7
4.11	0.162	8
3.76	0.148	9
3.43	0.135	10
3.05	0.120	11
2.69	0.106	12
2.34	0.092	13
2.03	0.080	14
1.83	0.072	15
1.57	0.062	16
1.37	0.054	17
1.22	0.048	18
1.04	0.041	19
0.89	0.035	20

SUBSTITUTION TABLE FOR PIPE PILES

METRIC SIZE SHOWN ON THE PLANS mm x mm	SIZE TO BE SUBSTITUTED inch x inch
PP 360 x 4.55	NPS 14 x 0.179
PP 360 x 6.35	NPS 14 x 0.250
PP 360 x 9.53	NPS 14 x 0.375
PP 360 x 11.12	NPS 14 x 0.438
PP 406 x 12.70	NPS 16 x 0.500
PP 460 x T	NPS 18 x T"
PP 508 x T	NPS 20 x T"
PP 559 x T	NPS 22 x T"
PP 610 x T	NPS 24 x T"
PP 660 x T	NPS 26 x T"
PP 711 x T	NPS 28 x T"
PP 762 x T	NPS 30 x T"
PP 813 x T	NPS 32 x T"
PP 864 x T	NPS 34 x T"
PP 914 x T	NPS 36 x T"
PP 965 x T	NPS 38 x T"
PP 1016 x T	NPS 40 x T"
PP 1067 x T	NPS 42 x T"
PP 1118 x T	NPS 44 x T"
PP 1219 x T	NPS 48 x T"
PP 1524 x T	NPS 60 x T"

The thickness in millimeters (T) represents an exact conversion of the thickness in inches (T").

SUBSTITUTION TABLE FOR NAILS AND SPIKES

METRIC COMMON NAIL, SHOWN ON THE PLANS Length, mm Diameter, mm	METRIC BOX NAIL, SHOWN ON THE PLANS Length, mm Diameter, mm	METRIC SPIKE, SHOWN ON THE PLANS Length, mm Diameter, mm	SIZE TO BE SUBSTITUTED Penny-weight
50.80 2.87	50.80 2.51	———	6d
63.50 3.33	63.50 2.87	———	8d
76.20 3.76	76.20 3.25	76.20 4.88	10d
82.55 3.76	82.55 3.25	82.55 4.88	12d
88.90 4.11	88.90 3.43	88.90 5.26	16d
101.60 4.88	101.60 3.76	101.60 5.72	20d
114.30 5.26	114.30 3.76	114.30 6.20	30d
127.00 5.72	127.00 4.11	127.00 6.68	40d
———	———	139.70 7.19	50d
———	———	152.40 7.19	60d

CONTRACT NO. 04-0120R4

CONTRACT CHANGE ORDER NO. 61

SHEET 49 OF 85

the producer of the aggregate submits to the Transportation Laboratory certified test results from a qualified testing laboratory that verify the aggregate complies with the requirements. Prior to starting the testing, the aggregate test shall be registered with the Department. A registration number can be obtained by calling (916) 227-7228. The registration number shall be used as the identification for the aggregate sample in correspondence with the Department. Upon request, a split of the tested sample shall be provided to the Department. Approval of aggregate will depend upon compliance with the specifications, based on the certified test results submitted, together with any replicate testing the Department may elect to perform. Approval will expire 3 years from the date the most recent registered and evaluated sample was collected from the aggregate source.

Qualified testing laboratories shall conform to the following requirements:

A. Laboratories performing ASTM Designation: C 1293 shall participate in the Cement and Concrete Reference Laboratory (CCRL) Concrete Proficiency Sample Program and shall have received a score of 3 or better on all tests of the previous 2 sets of concrete samples.
B. Laboratories performing ASTM Designation: C 1260 shall participate in the Cement and Concrete Reference Laboratory (CCRL) Pozzolan Proficiency Sample Program and shall have received a score of 3 or better on the shrinkage and soundness tests of the previous 2 sets of pozzolan samples.

Aggregates on the list shall conform to one of the following requirements:

A. When the aggregate is tested in conformance with the requirements in California Test 554 and ASTM Designation: C 1293, the average expansion at one year shall be less than or equal to 0.040 percent; or
B. When the aggregate is tested in conformance with the requirements in California Test 554 and ASTM Designation: C 1260, the average of the expansion at 16 days shall be less than or equal to 0.15 percent.

The amounts of cement and mineral admixture used in cementitious material shall be sufficient to satisfy the minimum cementitious material content requirements specified in Section 90-1.01, "Description," or Section 90-4.05, "Optional Use of Chemical Admixtures," of the Standard Specifications and shall conform to the following:

A. The minimum amount of cement shall not be less than 75 percent by mass of the specified minimum cementitious material content.
B. The minimum amount of mineral admixture to be combined with cement shall be determined using one of the following criteria:

    1. When the calcium oxide content of a mineral admixture is equal to or less than 2 percent by mass, the amount of mineral admixture shall not be less than 15 percent by mass of the total amount of cementitious material to be used in the mix.
    2. When the calcium oxide content of a mineral admixture is greater than 2 percent by mass, and any of the aggregates used are not listed on the approved list as specified in these special provisions, then the amount of mineral admixture shall not be less than 25 percent by mass of the total amount of cementitious material to be used in the mix.
    3. When the calcium oxide content of a mineral admixture is greater than 2 percent by mass and the fine and coarse aggregates are listed on the approved list as specified in

The QC Inspector shall be the duly designated person who acts for and on behalf of the Contractor for inspection, testing, and quality related matters for all welding.

Quality Assurance (QA) is the prerogative of the Engineer. The QA Inspector is the duly designated person who acts for and on behalf of the Engineer.

The QC Inspector shall be responsible for quality control acceptance or rejection of materials and workmanship, and shall be currently certified as an AWS Certified Welding Inspector (CWI) in conformance with the requirements in AWS QC1, "Standard for AWS Certification of Welding Inspectors."

The QC Inspector may be assisted by an Assistant QC Inspector provided that this individual is currently certified as an AWS Certified Associate Welding Inspector (CAWI) in conformance with the requirements in AWS QC1, "Standard for AWS Certification of Welding Inspectors." The Assistant QC Inspector may perform inspection under the direct supervision of the QC Inspector provided the assistant is always within visible and audible range of the QC Inspector. The QC Inspector shall be responsible for signing all reports and for determining if welded materials conform to workmanship and acceptance criteria. The ratio of QC Assistants to QC Inspectors shall not exceed 5 to 1.

When the term "Inspector" is used without further qualification, it shall refer to the QC Inspector.

When any work is welded in conformance with the provisions in Section 75, "Miscellaneous Metal," of the Standard Specifications, not including Section 75-1.035, "Bridge Joint Restrainer Units," of the Standard Specifications, Section 6.1.4 of AWS D1.1 is replaced with the following:

The QC Inspector shall be responsible for quality control acceptance or rejection of materials and workmanship and shall be currently certified as an AWS CWI in conformance with the requirements in AWS QC1, "Standard for AWS Certification of Welding Inspectors," or as a Welding Inspector Specialist (WIS) in conformance with the requirements in AWS B5.2, "Specification for the Qualification of Welding Inspector Specialists and Welding Inspector Assistants."

Section 6.14.6, "Personnel Qualification," of AWS D1.1, Section 7.8, "Personnel Qualification," of AWS D1.4, and Section 6.1.3.4, "Personnel Qualification," of AWS D1.5 are replaced with the following:

Personnel performing nondestructive testing (NDT) shall be qualified and certified in conformance with the requirements of the American Society for Nondestructive Testing (ASNT) Recommended Practice No. SNT-TC-1A and the Written Practice of the NDT firm. The Written Practice of the NDT firm shall meet or exceed the guidelines of the ASNT Recommended Practice No. SNT-TC-1A. Individuals who perform NDT, review the results, and prepare the written reports shall be either:

A. Certified NDT Level II technicians, or;
B. Level III technicians who hold a current ASNT Level III certificate in that discipline and are authorized and certified to perform the work of Level II technicians.

Section 6.5.4 of AWS D1.5 is replaced with the following:

CONTRACT NO. [illegible]
CONTRACT CHANGE ORDER NO. 61
SHEET 53 OF 85

for the entire period of the contract, as long as the welder's or welding operator's work remains satisfactory.

In addition to the requirements of AWS D1.1, welding procedures qualification for work welded in conformance with that code shall conform to the following requirements:

A. The travel speed, amperage, and voltage values that are used for tests conducted per AWS D1.1, Section 4.1.1, shall be consistent for each pass in a weld joint and shall in no case vary by more than ±10 percent for travel speed, ±10 percent for amperage, and ±7 percent for voltage as measured from a predetermined target value or average within each weld pass. The travel speed shall in no case vary by more than ±15 percent when using submerged arc welding.
B. When a nonstandard weld joint is to be made using a combination of WPSs, a single test may be conducted combining the WPSs to be used in production, provided the essential variables, including weld bead placement, of each process are limited to those established in Table 4.5.

In addition to the requirements of AWS D1.5, Section 5.12 or 5.13, welding procedures qualification for work welded in conformance with that code shall conform to the following requirements:

A. Unless considered prequalified, fillet welds shall be qualified in each position. The fillet weld soundness test shall be conducted using the essential variables of the WPS as established by the Procedure Qualification Record (PQR).
B. For qualification of joints that do not conform to Figures 2.4 and 2.5 of AWS D1.5, a minimum of two WPS qualification tests are required. The tests shall be conducted using both Figure 5.1 and Figure 5.3. The test conforming to Figure 5.1 shall be conducted in conformance with AWS D1.5, Section 5.12 or 5.13. The test conforming to Figure 5.3 shall be conducted using the welding electrical parameters that were established for the test conducted conforming to Figure 5.1. The ranges of welding electrical parameters established during welding per Figure 5.1 in conformance with AWS D1.5, Section 5.12, shall be further restricted according to the limits in Table 5.3 during welding per Figure 5.3.
C. Multiple zones within a weld joint may be qualified. The travel speed, amperage, and voltage values that are used for tests conducted per AWS D1.5 Section 5.13 shall be consistent for each pass in a weld joint, and shall in no case vary by more than ±10 percent for travel speed, ±10 percent for amperage, and ±7 percent for voltage as measured from a predetermined target value or average within each weld pass or zone. The travel speed shall in no case vary by more than ±15 percent when using submerged arc welding.
D. For a WPS qualified in conformance with AWS D1.5 Section 5.13, the values to be used for calculating ranges for current and voltage shall be based on the average of all weld passes made in the test. Heat input shall be calculated using the average of current and voltage of all weld passes made in the test for a WPS qualified in conformance with Section 5.12 or 5.13.
E. Macroetch tests are required for WPS qualification tests, and acceptance shall be per AWS D1.5 Section 5.19.3.
F. When a nonstandard weld joint is to be made using a combination of WPSs, a test conforming to Figure 5.3 may be conducted combining the WPSs to be used in

CONTRACT NO. 04-0120R4
CONTRACT CHANGE ORDER NO. 61
SHEET 55 OF 85

be compensated for any resulting loss, and an extension of time will be granted, in the same manner as provided for in Section 8-1.09, "Right of Way Delays," of the Standard Specifications. The Contractor shall notify the Engineer one week prior to performing any qualification tests. Witnessing of qualification tests by the Engineer shall not constitute approval of the intended joint locations, welding parameters, or essential variables.

The Contractor shall designate in writing a welding Quality Control Manager (QCM). The QCM shall be responsible directly to the Contractor for the quality of welding, including materials and workmanship, performed by the Contractor and subcontractors.

The QCM shall be the sole individual responsible to the Contractor for submitting, receiving, reviewing, and approving all correspondence, required submittals, and reports to and from the Engineer. The QCM shall be a registered professional engineer or shall be currently certified as a CWI.

Unless the QCM is hired by a subcontractor providing only QC services, the QCM shall not be employed or compensated by any subcontractor, or by other persons or entities hired by subcontractors, who will provide other services or materials for the project. The QCM may be an employee of the Contractor.

Welding inspection personnel or NDT firms to be used in the work shall not be employed or compensated by any subcontractor, or by other persons or entities hired by subcontractors, who will provide other services or materials for the project, except for the following conditions:

A. The work is welded in conformance with AWS D1.5 and is performed at a permanent fabrication or manufacturing facility that is certified under the AISC Quality Certification Program, Category Cbr, Major Steel Bridges and Fracture Critical endorsement F, when applicable.
B. The welding is performed on pipe pile material at a permanent pipe manufacturing facility authorized to apply the American Petroleum Institute (API) monogram for API 5L pipe.

For welding performed at such facilities, the inspection personnel or NDT firms may be employed or compensated by the facility performing the welding provided the facility maintains a QC program that is independent from production.

Prior to submitting the Welding Quality Control Plan (WQCP) required herein, a prewelding meeting between the Engineer, the Contractor's QCM, and a representative from each entity performing welding or inspection for this project, shall be held to discuss the requirements for the WQCP.

The Contractor shall submit to the Engineer, in conformance with the provisions in Section 5-1.02, "Plans and Working Drawings," of the Standard Specifications, 2 copies of a separate WQCP for each subcontractor or supplier for each item of work for which welding is to be performed.

The Contractor shall allow the Engineer 2 weeks to review the WQCP submittal after a complete plan has been received. No welding shall be performed until the WQCP is approved in writing by the Engineer. In the event the Engineer fails to complete the review within the time allowed, and if, in the opinion of the Engineer, completion of the work is delayed or interfered with by reason of the Engineer's delay in completing the review, the Contractor will be compensated for any resulting loss, and an extension of time will be granted, in the same manner as provided for in Section 8-1.09, "Right of Way Delays," of the Standard Specifications.

An amended WQCP or any addendum to the approved WQCP shall be submitted to, and approved in writing by the Engineer, for proposed revisions to the approved WQCP. An

CONTRACT NO. [illegible]
CONTRACT CHANGE ORDER NO. 61
SHEET 57 OF 85

The Engineer will review the Welding Report to determine if the Contractor is in conformance with the WQCP. Unless otherwise specified, the Engineer shall be allowed 2 weeks to review the report and respond in writing after the complete Welding Report has been received. Prior to receiving notification from the Engineer of the Contractor's conformance with the WQCP, the Contractor may encase in concrete or cover welds for which the Welding Report has been submitted. However, should the Contractor elect to encase or cover those welds prior to receiving notification from the Engineer, it is expressly understood that the Contractor shall not be relieved of the responsibility for incorporating material in the work that conforms to the requirements of the plans and specifications. Material not conforming to these requirements will be subject to rejection. Should the Contractor elect to wait to encase or cover welds pending notification by the Engineer, and in the event the Engineer fails to complete the review within the time allowed, and if, in the opinion of the Engineer, completion of the work is delayed or interfered with by reason of the Engineer's delay in completing the review, the Contractor will be compensated for any resulting loss, and an extension of time will be granted, in the same manner as provided for in Section 8-1.09, "Right of Way Delays," of the Standard Specifications.

In addition to the requirements in AWS D1.1 and AWS D1.5, second-time excavations of welds or base metal to repair unacceptable discontinuities, regardless of NDT method, and all repairs of cracks require prior approval of the Engineer.

The Engineer shall be notified immediately in writing when welding problems, deficiencies, base metal repairs, or any other type of repairs not submitted in the WQCP are discovered, and also of the proposed repair procedures to correct them. For requests to perform second-time repairs or repairs of cracks, the Contractor shall include an engineering evaluation of the proposed repair. The engineering evaluation, at a minimum, shall address the following:

A. What is causing each defect?
B. Why the repair will not degrade the material properties?
C. What steps are being taken to prevent similar defects from happening again?

The Contractor shall allow the Engineer one week to review these procedures. No remedial work shall begin until the repair procedures are approved in writing by the Engineer. In the event the Engineer fails to complete the review within the time allowed, and if, in the opinion of the Engineer, completion of the work is delayed or interfered with by reason of the Engineer's delay in completing the review, the Contractor will be compensated for any resulting loss, and an extension of time will be granted, in the same manner as provided for in Section 8-1.09, "Right of Way Delays," of the Standard Specifications.

The QCM shall sign and furnish to the Engineer, a Certificate of Compliance in conformance with the provisions in Section 6-1.07, "Certificates of Compliance," of the Standard Specifications for each item of work for which welding was performed. The certificate shall state that all of the materials and workmanship incorporated in the work, and all required tests and inspections of this work, have been performed in conformance with the details shown on the plans, the Standard Specifications, and these special provisions.

PAYMENT

Full compensation for conforming to the requirements of "Welding" shall be considered as included in the contract prices paid for the various items of work involved and no additional compensation will be allowed therefor.

CONTRACT NO. 04-0120K4
CONTRACT CHANGE ORDER NO. 61
SHEET 59 OF 85

Removed materials that are not to be salvaged or used in the reconstruction shall become the property of the Contractor and shall be disposed of in conformance with the provisions in Section 7-1.13, "Disposal of Material Outside the Highway Right of Way," of the Standard Specifications.

The Contractor shall submit a complete bridge removal plan to the Engineer for each bridge listed above, detailing procedures, sequences, and all features required to perform the removal in a safe and controlled manner.

The bridge removal plan shall include, but not be limited to the following:

A. The removal sequence, including staging of removal operations.
B. Equipment locations on the structure during removal operations.
CLocations where work is to be performed over traffic or utilities.
D. Measures to assure that people, property, utilities, and improvements will not be endangered.

The bridge removal plan shall conform to the provisions in Section "Working drawings" of these special provisions. The number of sets of drawings, design calculations, and unless otherwise specified in the following table, the time for reviewing bridge removal plans shall be the same as specified for falsework working drawings in Section 51-1.06A, "Falsework Design and Drawings," of the Standard Specifications.

10-1.__ EARTHWORK

Earthwork shall conform to the provisions in Section 19, "Earthwork," of the Standard Specifications and these special provisions.

CAST-IN-DRILLED-HOLE CONCRETE PILES

Cast-in-drilled-hole concrete piling shall conform to the provisions in Section 49-4, "Cast-In-Place Concrete Piles," of the Standard Specifications and these special provisions.

The provisions of "Welding" of these special provisions shall not apply to temporary steel casings.

Cast-in-drilled-hole concrete piles 600 mm in diameter or larger may be constructed by excavation and depositing concrete under slurry.

Materials

Concrete deposited under slurry shall have a nominal penetration equal to or greater than 90 mm. Concrete shall be proportioned to prevent excessive bleed water and segregation.

Concrete deposited under slurry shall contain not less than 400 kg of cementitious material per cubic meter.

The combined aggregate grading used in concrete for cast-in-drilled-hole concrete piling shall be either the 25-mm maximum grading, the 12.5-mm maximum grading, or the 9.5-mm maximum grading and shall conform to the requirements in Section 90-3, "Aggregate Gradings," of the Standard Specifications.

Mineral Slurry

Mineral slurry shall be mixed and thoroughly hydrated in slurry tanks, and slurry shall be sampled from the slurry tanks and tested before placement in the drilled hole.

Slurry shall be recirculated or continuously agitated in the drilled hole to maintain the specified properties.

Recirculation shall include removal of drill cuttings from the slurry before discharging the slurry back into the drilled hole. When recirculation is used, the slurry shall be sampled and tested at least every 2 hours after beginning its use until tests show that the samples taken from the slurry tank and from near the bottom of the hole have consistent specified properties. Subsequently, slurry shall be sampled at least twice per shift as long as the specified properties remain consistent.

Slurry that is not recirculated in the drilled hole shall be sampled and tested at least every 2 hours after beginning its use. The slurry shall be sampled mid-height and near the bottom of the hole. Slurry shall be recirculated when tests show that the samples taken from mid-height and near the bottom of the hole do not have consistent specified properties.

Slurry shall also be sampled and tested prior to final cleaning of the bottom of the hole and again just prior to placing concrete. Samples shall be taken from mid-height and near the bottom of the hole. Cleaning of the bottom of the hole and placement of the concrete shall not start until tests show that the samples taken from mid-height and near the bottom of the hole have consistent specified properties.

Synthetic Slurry

Synthetic slurries shall be used in conformance with the manufacturer's recommendations and these special provisions. The following synthetic slurries may be used:

PRODUCT	MANUFACTURER
SlurryPro CDP	KB Technologies Ltd. 3648 FM 1960 West Suite 107 Houston, TX 77068 (800) 525-5237
Super Mud	PDS Company c/o Champion Equipment Company 8140 East Rosecrans Ave. Paramount, CA 90723 (562) 634-8180
Shore Pac GCV	CETCO Drilling Products Group 1350 West Shure Drive Arlington Heights, IL 60004 (847) 392-5800
Novagel Polymer	Geo-Tech Drilling Fluids 220 N. Zapata Hwy, Suite 11A Laredo, TX 78043 (210) 587-4758

Inclusion of a synthetic slurry on the above list may be obtained by meeting the Department's requirements for synthetic slurries. The requirements can be obtained from the Office of Structure Design, P.O. Box 942874, Sacramento, CA 94274-0001.

Synthetic slurries listed may not be appropriate for a given site.

Synthetic slurries shall not be used in holes drilled in primarily soft or very soft cohesive soils as determined by the Engineer.

A manufacturer's representative, as approved by the Engineer, shall provide technical assistance for the use of their product, shall be at the site prior to introduction of the synthetic slurry into a drilled hole, and shall remain at the site until released by the Engineer.

Synthetic slurries shall be sampled and tested at both mid-height and near the bottom of the drilled hole. Samples shall be taken and tested during drilling as necessary to verify the control of the properties of the slurry. Samples shall be taken and tested when drilling is complete, but prior to final cleaning of the bottom of the hole. When samples are in conformance with the requirements shown in the following tables for each slurry product, the bottom of the hole shall be cleaned and any loose or settled material removed. Samples shall be obtained and tested after final cleaning and immediately prior to placing concrete.

Super Mud synthetic slurries shall be tested for conformance to the requirements shown in the following table:

SUPER MUD PDS Company		
PROPERTY	REQUIREMENT	TEST
Density (kg/m^3) - prior to final cleaning - just prior to placing concrete	less than or equal to 1025*	Mud Weight (Density) API 13B-1 Section 1
Viscosity (seconds/liter) - during drilling - prior to final cleaning - just prior to placing concrete	34 to 64 less than or equal to 64	Marsh Funnel and Cup API 13B-1 Section 2.2
pH	8 to 10.0	Glass Electrode pH Meter or pH Paper
Sand Content (percent) - prior to final cleaning -just prior to placing concrete	less than or equal to 0.5	Sand API 13B-1 Section 5
*When approved by the Engineer, slurry may be used in salt water, and the allowable densities may be increased up to 32 kg/m^3. Slurry temperature shall be at least 4°C when tested.		

CONTRACT NO. 04-0120R4

CONTRACT CHANGE ORDER NO. 61

SHEET 67 OF 85

Novagel Polymer synthetic slurries shall be tested for conformance to the requirements shown in the following table:

NOVAGEL POLYMER Geo-Tech Drilling Fluids		
PROPERTY	REQUIREMENT	TEST
Density (kg/m^3) - during drilling - prior to final cleaning - just prior to placing concrete	 less than or equal to 1075* less than or equal to 1025*	Mud Weight (Density) API 13B-1 Section 1
Viscosity (seconds/liter) - during drilling - prior to final cleaning - just prior to placing concrete	 48 to 110 less than or equal to 110	Marsh Funnel and Cup API 13B-1 Section 2.2
pH	6.0 to 11.5	Glass Electrode pH Meter or pH Paper
Sand Content (percent) - prior to final cleaning -just prior to placing concrete	 less than or equal to 0.5	Sand API 13B-1 Section 5
*When approved by the Engineer, slurry may be used in salt water, and the allowable densities may be increased up to 32 kg/m^3. Slurry temperature shall be at least 4°C when tested.		

CONTRACT NO. 04-012024

CONTRACT CHANGE ORDER NO. 61

SHEET 69 OF 85

2. Concrete batching, delivery, and placing systems, including time schedules and capacities therefor. Time schedules shall include the time required for each concrete placing operation at each pile.
3. Concrete placing rate calculations. When requested by the Engineer, calculations shall be based on the initial pump pressures or static head on the concrete and losses throughout the placing system, including anticipated head of slurry and concrete to be displaced.
4. Suppliers' test reports on the physical and chemical properties of the slurry and any proposed slurry chemical additives, including Material Safety Data Sheet.
5. Slurry testing equipment and procedures.
6. Methods of removal and disposal of excavation, slurry, and contaminated concrete, including removal rates.
7. Methods and equipment for slurry agitating, recirculating, and cleaning.

In addition to compressive strength requirements, the consistency of the concrete to be deposited under slurry shall be verified before use by producing a test batch. The test batch shall be produced and delivered to the project under conditions and in time periods similar to those expected during the placement of concrete in the piles. Concrete for the test batch shall be placed in an excavated hole or suitable container of adequate size to allow for testing as specified herein. Depositing of test batch concrete under slurry will not be required. In addition to meeting the specified nominal penetration, the test batch shall meet the following requirements:

A. For piles where the time required for each concrete placing operation, as submitted in the placing plan, will be 2 hours or less, the test batch shall demonstrate that the proposed concrete mix design achieves either a penetration of at least 50 mm or a slump of at least 125 mm after twice that time has elapsed.
B. For piles where the time required for each concrete placing operation, as submitted in the placing plan, will be more than 2 hours, the test batch shall demonstrate that the proposed concrete mix design achieves either a penetration of at least 50 mm or a slump of at least 125 mm after that time plus 2 hours has elapsed.

The time period shall begin at the start of placement. The concrete shall not be vibrated or agitated during the test period. Penetration tests shall be performed in conformance with the requirements in California Test 533. Slump tests shall be performed in conformance with the requirements in ASTM Designation: C 143. Upon completion of testing, the concrete shall be disposed of in conformance with the provisions in Section 7-1.13, "Disposal of Material Outside the Highway Right of Way," of the Standard Specifications.

The concrete deposited under slurry shall be carefully placed in a compact, monolithic mass and by a method that will prevent washing of the concrete. Concrete deposited under slurry need not be vibrated. Placing concrete shall be a continuous operation lasting not more than the time required for each concrete placing operation at each pile, as submitted in the placing plan, unless otherwise approved in writing by the Engineer. The concrete shall be placed with concrete pumps and delivery tube system of adequate number and size to complete the placing of concrete in the time specified. The delivery tube system shall consist of one of the following:

A. A tremie tube or tubes, each of which are at least 250 mm in diameter, fed by one or more concrete pumps.
B. One or more concrete pump tubes, each fed by a single concrete pump.

CONTRACT NO. 04-0120K4
CONTRACT CHANGE ORDER NO. 61
SHEET 11 OF 85

shall not apply to permanent steel casings. Permanent casings shall be watertight and of sufficient strength to withstand the loads from installation procedures.

Acceptance Testing and Mitigation

Vertical inspection pipes for acceptance testing shall be provided in all cast-in-drilled-hole concrete piles that are 600 mm in diameter or larger, except when the holes are dry or when the holes are dewatered without the use of temporary casing to control ground water.

Inspection pipes shall be Schedule 40 polyvinyl chloride pipes with a nominal inside diameter of 50 mm. Each inspection pipe shall be capped top and bottom and shall have watertight couplers to provide a clean, dry and unobstructed 50-mm diameter clear opening from 1.0 m above the pile cutoff down to the bottom of the reinforcing cage.

If the Contractor drills the hole below the specified tip elevation, the reinforcement and the inspection pipes shall be extended to 75 mm clear of the bottom of the drilled hole.

Inspection pipes shall be placed around the pile, inside the outermost spiral or hoop reinforcement, and 75 mm clear of the vertical reinforcement, at a uniform spacing not exceeding 840 mm measured along the circle passing through the centers of inspection pipes. A minimum of 2 inspection pipes per pile shall be used. When the vertical reinforcement is not bundled and each bar is not more than 26 mm in diameter, inspection pipes may be placed 50 mm clear of the vertical reinforcement. The inspection pipes shall be placed to provide the maximum diameter circle that passes through the centers of the inspection pipes while maintaining the clear spacing required herein. The pipes shall be installed in straight alignment, parallel to the main reinforcement, and securely fastened in place to prevent misalignment during installation of the reinforcement and placing of concrete in the hole.

The Contractor shall log the location of the inspection pipe couplers with respect to the plane of pile cut off, and these logs shall be delivered to the Engineer upon completion of the placement of concrete in the drilled hole.

After placing concrete and before requesting acceptance tests, each inspection pipe shall be tested by the Contractor in the presence of the Engineer by passing a 48.3-mm diameter rigid cylinder 610 mm long through the complete length of pipe. If the 48.3-mm diameter rigid cylinder fails to pass any of the inspection pipes, the Contractor shall attempt to pass a 32.0-mm diameter rigid cylinder 1.375 m long through the complete length of those pipes in the presence of the Engineer. If an inspection pipe fails to pass the 32.0-mm diameter cylinder, the Contractor shall immediately fill all inspection pipes in the pile with water.

The Contractor shall replace each inspection pipe that does not pass the 32.0-mm diameter cylinder with a 50.8-mm diameter hole cored through the concrete for the entire length of the pile. Cored holes shall be located as close as possible to the inspection pipes they are replacing and shall be no more than 150 mm inside the reinforcement. Coring shall not damage the pile reinforcement. Cored holes shall be made with a double wall core barrel system utilizing a split tube type inner barrel. Coring with a solid type inner barrel will not be allowed. Coring methods and equipment shall provide intact cores for the entire length of the pile concrete. The coring operation shall be logged by an Engineering Geologist or Civil Engineer licensed in the State of California and experienced in core logging. Coring logs shall include complete descriptions of inclusions and voids encountered during coring, and shall be delivered to the Engineer upon completion. Concrete cores shall be preserved, identified with the exact location the core was recovered from within the pile, and made available for inspection by the Engineer.

Acceptance tests of the concrete will be made by the Engineer, without cost to the Contractor. Acceptance tests will evaluate the homogeneity of the placed concrete. Tests will include gamma-gamma logging. Tests may also include crosshole sonic logging and other means of

CONTRACT CHANGE ORDER NO. 61
SHEET 73 OF 85

A. The designation and location of the pile addressed by the mitigation plan.
B. A review of the structural, geotechnical, and corrosion design requirements of the rejected pile.
C. A step by step description of the mitigation work to be performed, including drawings if necessary.
D. An assessment of how the proposed mitigation work will address the structural, geotechnical, and corrosion design requirements of the rejected pile.
E. Methods for preservation or restoration of existing earthen materials.
F. A list of affected facilities, if any, with methods and equipment for protection of these facilities during mitigation.
G. The State assigned contract number, bridge number, full name of the structure as shown on the contract plans, District-County-Route-Kilometer Post, and the Contractor's (and Subcontractor's if applicable) name on each sheet.
H. A list of materials, with quantity estimates, and personnel, with qualifications, to be used to perform the mitigation work.
I. The seal and signature of an engineer who is licensed as a Civil Engineer by the State of California.

For rejected piles to be repaired, the Contractor shall submit a pile mitigation plan that contains the following additional information:

A. An assessment of the nature and size of the anomalies in the rejected pile.
B. Provisions for access for additional pile testing if required by the Engineer.

For rejected piles to be replaced or supplemented, the Contractor shall submit a pile mitigation plan that contains the following additional information:

A. The proposed location and size of additional piling.
B. Structural details and calculations for any modification to the structure to accommodate the replacement or supplemental piling.

All provisions for cast-in-drilled-hole concrete piling shall apply to replacement piling.

The Contractor shall allow the Engineer 25 days to review the mitigation plan after a complete submittal has been received.

Should the Engineer fail to review the complete pile mitigation submittal within the time specified, and if, in the opinion of the Engineer, the Contractor's controlling operation is delayed or interfered with by reason of the delay in reviewing the pile mitigation plan, an extension of time commensurate with the delay in completion of the work thus caused will be granted in conformance with the provisions in Section 8-1.09, "Right of Way Delays," of the Standard Specifications.

When repairs are performed, the Contractor shall submit a mitigation report to the Engineer within 10 days of completion of the repair. This report shall state exactly what repair work was performed and quantify the success of the repairs relative to the submitted mitigation plan. The mitigation report shall be stamped and signed by an engineer that is licensed as a Civil Engineer by the State of California. The mitigation report shall show the State assigned contract number, bridge number, full name of the structure as shown on the contract plans, District-County-Route-Kilometer Post, and the Contractor (and subcontractor if applicable) name on each sheet. The Engineer will be the sole judge as to whether a mitigation proposal is acceptable, the mitigation

CONTRACT NO. 04-012024
CONTRACT CHANGE ORDER NO. 01
SHEET 75 OF 85

MEASUREMENT AND PAYMENT (PILING)

Measurement and payment for the various types and classes of piles shall conform to the provisions in Sections 49-6.01, "Measurement," and 49-6.02, "Payment," of the Standard Specifications and these special provisions.

Payment for cast-in-place concrete piling shall conform to the provisions in Section 49-6.02, "Payment," of the Standard Specifications and these special provisions except that, when the diameter of cast-in-place concrete piling is shown on the plans as 600 mm or larger, reinforcement in the piling will be paid for by the kilogram as bar reinforcing steel (bridge).

Full compensation for slurry, depositing concrete under slurry, test batches, inspection pipes, filling inspection holes and pipes with grout, drilling oversized cast-in-drilled-hole concrete piling, filling cave-ins and oversized piles with concrete, and redrilling through concrete, shall be considered as included in the contract prices paid per meter for cast-in-drilled-hole concrete piling of the types and sizes listed in the Engineer's Estimate, and no additional compensation will be allowed therefor.

The contract price paid per meter for place permanent steel casing of the sizes listed in the Engineer's Estimate shall include full compensation for furnishing all labor, materials, tools, equipment, and incidentals, and for doing all the work involved in installing permanent steel casing, complete in place, as shown on the plans, as specified in the Standard Specifications and these special provisions, and as directed by the Engineer.

Full compensation for furnishing and installing steel plate cap to permanent steel casing at Bent 41 shall be considered as included in the contract price paid per meter for place permanent steel casing and no additional compensation will be allow

ELASTOMERIC BEARING PADS

Elastomeric bearing pads shall conform to the provisions in Section 51-1.12H, "Elastomeric Bearing Pads," of the Standard Specifications and these special provisions.

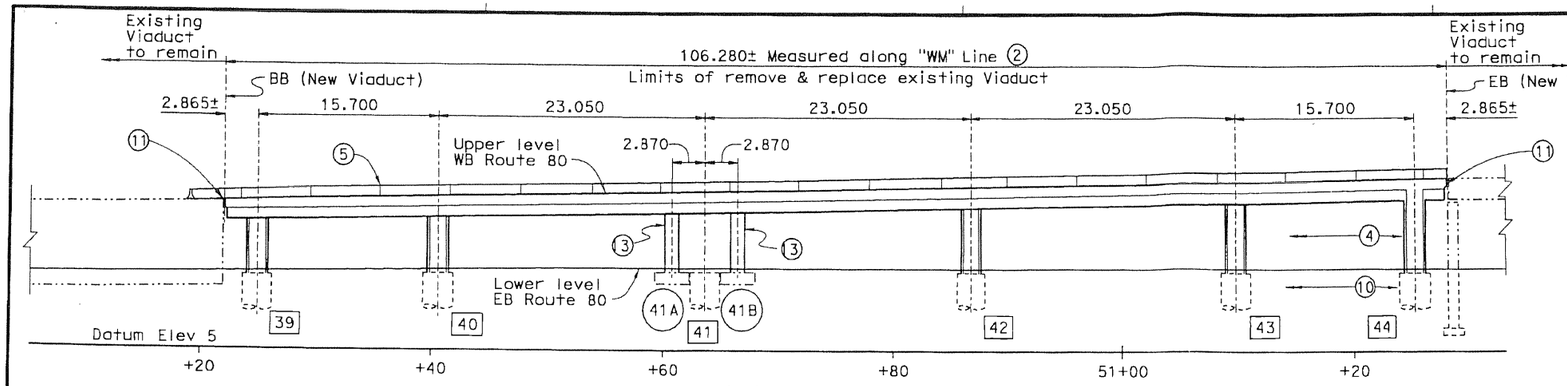

Existing structure not shown (B39 through B-48)

ELEVATION

1:250

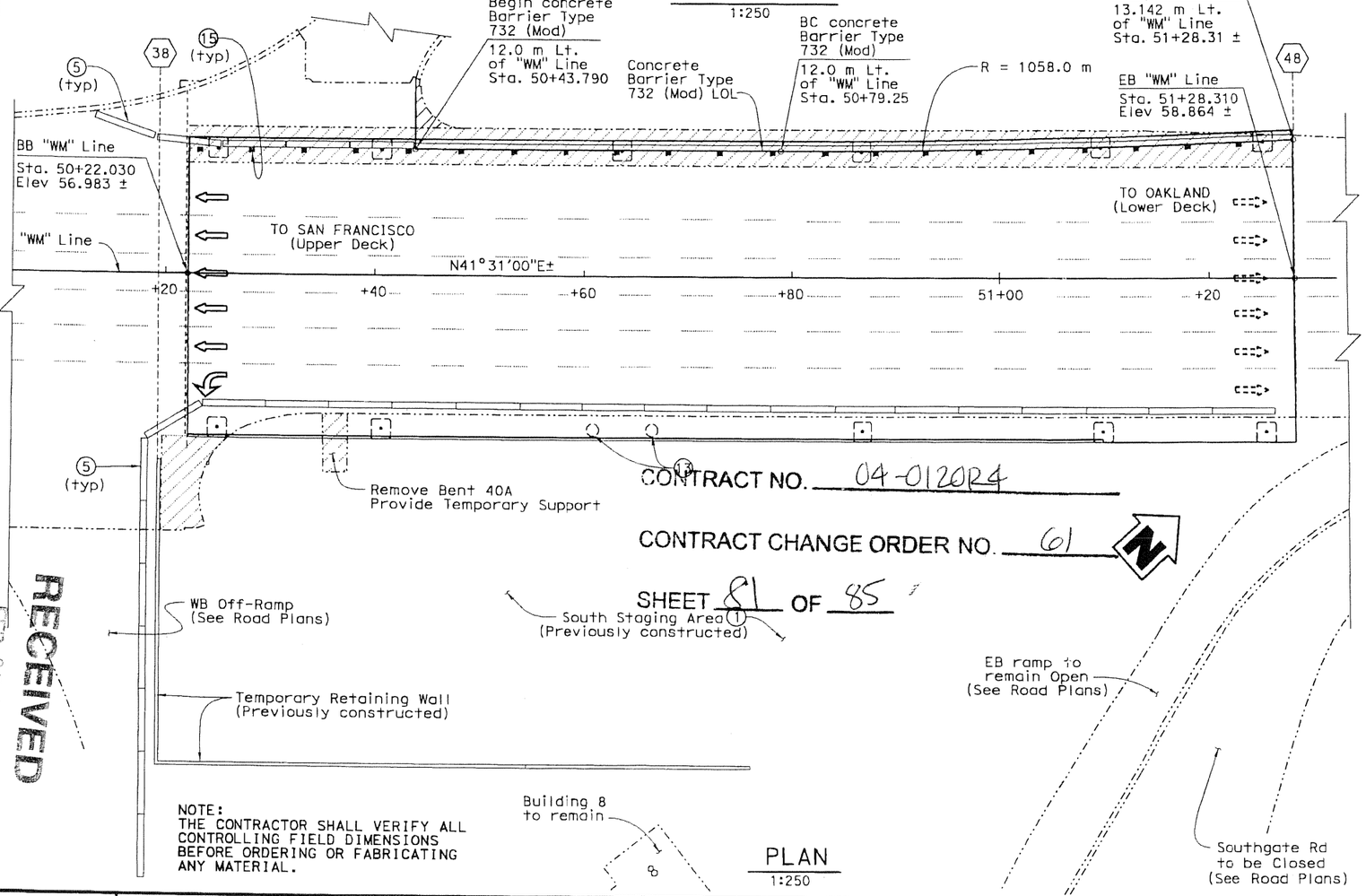

NOTE:
THE CONTRACTOR SHALL VERIFY ALL CONTROLLING FIELD DIMENSIONS BEFORE ORDERING OR FABRICATING ANY MATERIAL.

PLAN

1:250

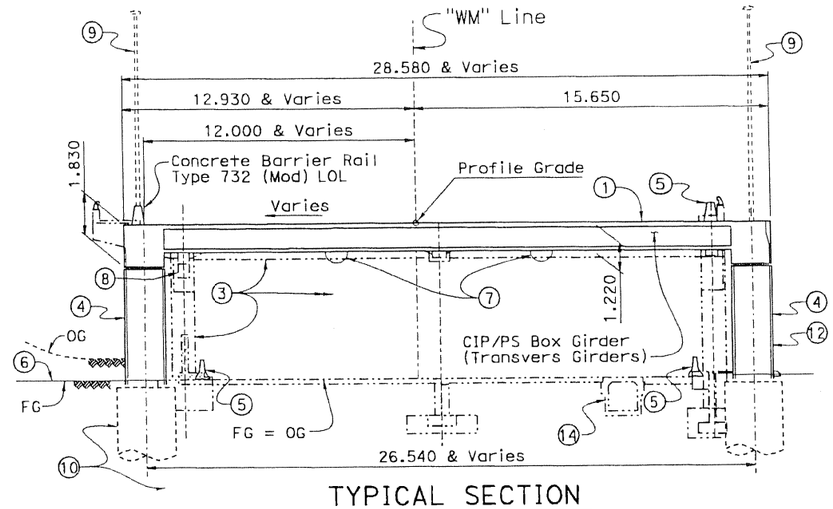

TYPICAL SECTION

1:125

Notes:

1. For construction sequence see "Construction Sequence Details" sheets
2. Contractor shall verify by field measurement
3. Existing Viaduct to be removed (stage 2 demolition)
4. 1.83 m x 1.93 m columns
5. Temporary Concrete Barrier Type K (See Road Plans)
6. Excavate north side level with lower roadway elevation (See Road Plans)
7. Soffit Luminaire
8. Utilities attached to existing bridge to be relocated (See Road Plans)
9. Temporary lighting (See Road Plans)
10. CIDH piles with permanent casing
11. 75 mm ± gap required between new and existing structure for move in operation
12. Column 41 south to be constructed during YBI viaduct final modifications
13. Temporary 1.2 m ø Columns south side only
14. Abandoned utility tunnel to be filled with concrete prior to bridge move
15. Deck Drain, see "Deck Drain Details" sheet

LEGEND:

- Indicates Existing Structure
- Indicates New Structure
- Indicates partial Bridge removal (Stage 1 demolition)
- Indicates Westbound Traffic (upper deck)
- Indicates Eastbound Traffic (lower deck)
- XX — Indicates Bent Number New structure
- XX — Indicates Bent Number Existing structure
- XX — Indicates Temporary Column along South Side

DIST	COUNTY	ROUTE	KILOMETER POST TOTAL PROJECT	SHEET No	TOTAL SHEETS
04	SF	80			

M J Cullen 1-19-07
REGISTERED CIVIL ENGINEER DATE

REGISTERED PROFESSIONAL ENGINEER — W. J. CULLEN No. C 40620 Exp. 03-31-07 CIVIL — STATE OF CALIFORNIA

PLANS APPROVAL DATE

The State of California or its officers or agents shall not be responsible for the accuracy or completeness of electronic copies of this plan sheet.

To get to the Caltrans web site, go to: http://www.dot.ca.gov

SUBMITAL FOR PILE, FOOTING AND COLUMN CONSTRUCTION ONLY

RECEIVED FEB 05 2007 CONDON-JOHNSON

Caltrans Metric		DESIGN	BY G. Schuster	CHECKED M. J. Cullen	LOAD & RESISTANCE FACTOR DESIGN	LIVE LOADING: HL93 W/"LOW-BOY"; PERMIT DESIGN VEHICLE
		DETAILS	BY G. Souza/T. C/A. C	CHECKED M. J. Cullen	LAYOUT	BY G. Schuster / CHECKED M. J. Cullen
	DESIGN ENGINEER	QUANTITIES	BY M. J. Cullen	CHECKED G. Schuster	SPECIFICATIONS	BY S. Margaris / PLANS AND SPECS COMPARED S. Margaris

ALL DIMENSIONS ARE IN METERS UNLESS OTHERWISE SHOWN

ORIGINAL SCALE IN MILLIMETERS FOR REDUCED PLANS 0 10 20 30 40 50 60 70 80 90 100

STATE OF CALIFORNIA DEPARTMENT OF TRANSPORTATION

DIVISION OF ENGINEERING SERVICES STRUCTURE DESIGN

DESIGN BRANCH 5

CU 04
EA 0120P1

FILE => 34-0006-a-gp.dgn

BRIDGE NO. 34-0006
KILOMETER POST

WEST TIE IN PHASE 1
YBI VIADUCT REPLACEMENT
GENERAL PLAN

DISREGARD PRINTS BEARING EARLIER REVISION DATES

REVISION DATES: 12-28-06 | 01-03-07 | 10-26-06 | 11-20-06 | 11-03-06 | 11-20-06 | 11-20-06 | 11-20-06 | 11-16-06 | 12-20-06

SHEET 1 OF 33

STRUCTURES DESIGN GENERAL PLAN SHEET (METRIC) (REV.07-24-06)

DATE PLOTTED => 17-JAN-2007 TIME PLOTTED => 14:57
USERNAME => AChen

DIST	COUNTY	ROUTE	KILOMETER POST TOTAL PROJECT	SHEET NO	TOTAL
04	SF	80			

M.J. Cullen 1-19-07
REGISTERED CIVIL ENGINEER

PLANS APPROVAL DATE

The State of California or its officers or agents shall not be responsible for the accuracy or completeness of electronic copies of this plan sheet.

REGISTERED PROFESSIONAL ENGINEER
W.J. CULLEN
No. 40620
Exp. 3-31-2007
CIVIL
STATE OF CALIFORNIA

SUBMITAL FOR PILE, FOOTING AND COLUMN CONSTRUCTION ONLY

TO SAN FRANCISCO

"WM" Line
N41°31'00"E

50+00
Existing Structure
Foundation Not Shown

11.920 ✳

14.640 ✳

N48°29'00"W

℄ Bent 39
@ "WM" Line
Sta 50+24.895

℄ Bent 40
@ "WM" Line
Sta 50+40.595

N48°29'00"W ℄ spread footings (typ)

11.950 m Lt
of "WM" Line
℄ CIDH Pile

Existing
Utility
Vault

℄ Bent 41
@ "WM" Line
Sta 50+63.645

12.360 m Lt
of "WM" Line
℄ CIDH Pile

12.930 m Lt
of "WM" Line
℄ CIDH Pile

Existing Structure
Foundation Not Shown
"WM" Line
N41°31'00"E

51+00

℄ Bent 42
@ "WM" Line
Sta 50+86.695

℄ Bent 43
@ "WM" Line
Sta 51+9.745

℄ Bent 44
@ "WM" Line
Sta 51+25.445

TO OAKLAND

49.08

49.39

16.720 m Rt
of "WM" Line
℄ CIDH Pile
See Note 1

℄ Temporary 3 m x 5 m
spread footings 14.64 m Rt
of "WM" line, typ

2.875
℄ spread
footing

CONTRACT NO. 04-0120R4

CONTRACT CHANGE ORDER NO. 61

SHEET 82 OF 85

Notes:

1. This pile is required for a future column. Rebar cage and steel casing shall be cut off 300 mm below ground surface. This CIDH Pile shall be constructed before Temporary spread footings. See "Detail A" on "Temporary Column Details" sheet

Indicates existing footings

○ Indicates 2.134 m ø CIDH Piling

✳ ℄ CIDH Piles measured from "WM" line and typical unless otherwise noted

Indicates bottom of spread footing elevation

ALL DIMENSIONS ARE IN METERS UNLESS OTHERWISE SHOWN

PRELIMINARY INVESTIGATION SECTION

SCALE 1:250	VERT. DATUM NGVD29	PHOTOGRAMMETRY AS OF:			
	HORZ. DATUM NAD83	SURVEYED	BY	DRAFTED	BY
ALIGNMENT TIES	DIST. TRAVERSE SHEET	FIELD CHECKED	BY	CHECKED	BY

STRUCTURES FOUNDATION PLAN SHEET (METRIC) (REV. 4/20/00)

DESIGN	BY M. Cullen	CHECKED G. Schuster	
DETAILS	BY G. Souza/A. Chen	CHECKED G. Schuster	
QUANTITIES	BY M. Cullen	CHECKED G. Schuster	

ORIGINAL SCALE IN MILLIMETERS FOR REDUCED PLANS 0 10 20 30 40 50 60 70 80 90 100

STATE OF CALIFORNIA
DEPARTMENT OF TRANSPORTATION

DIVISION OF STRUCTURES
STRUCTURE DESIGN 5

CU 04
EA 0120P1

FILE => 34-0006-e-fp.dgn

BRIDGE NO. 34-0006
KILOMETER POST

YBI VIADUCT REPLACEMENT / WEST TIE IN
FOUNDATION PLAN

DISREGARD PRINTS BEARING EARLIER REVISION DATES →

REVISION DATES (PRELIMINARY STAGE ONLY)
10-12-06 | 11-28-06 | 12-04-06 | 12-04-06 | 12-15-06 | 12-14-06 | 12-22-06 | 1-04-07

SHEET 10 OF 33

DATE PLOTTED => 17-JAN-2007 TIME PLOTTED => 14:58
USERNAME => AChen

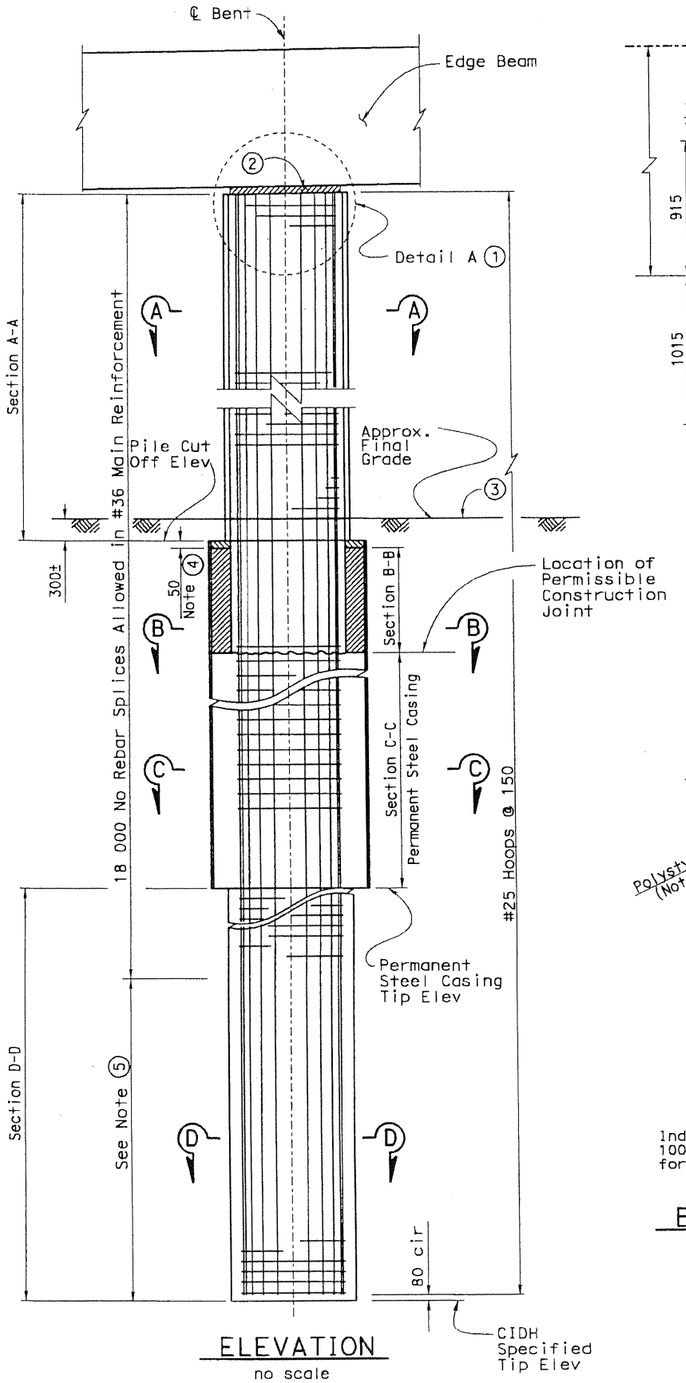

ELEVATION

no scale

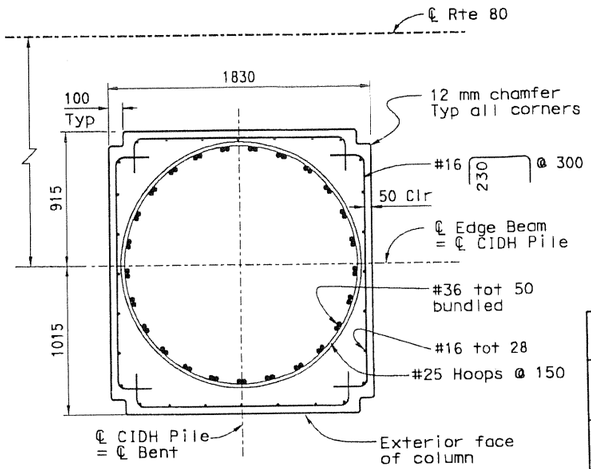

SECTION A-A

1:20

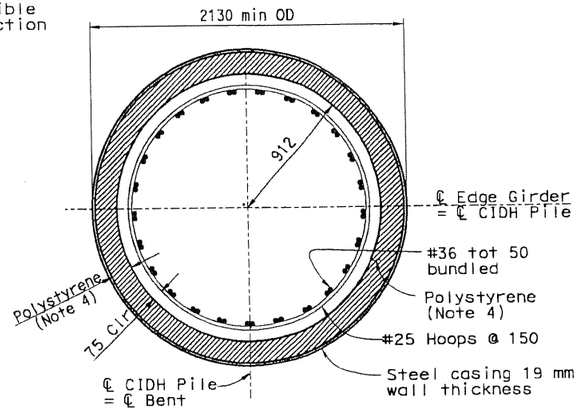

SECTION B-B

1:20

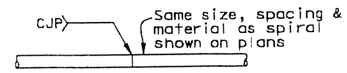

Individual hoops, made continuous with 100% penetration welds, may be substituted for spirals.

BUTT WELDED CONTINUOUS HOOP BAR AND HOOP DETAIL

no scale

CONTRACT NO. 04-0120P4

CONTRACT CHANGE ORDER NO. 6

Notes:

1. For "Detail A", see "Permanent Column/CIDH Pile Details No. 2" sheet
2. Actual top of column elevation shall be with in 5 mm of theoretical top of column elevation and place level with smooth finish
3. For partial removal of existing footing, see "Permanent Column Details No. 2" sheet
4. Place 50 mm concrete cap (similar to Section C-C) at top of steel casing
5. Ultimate Butt Splice shall be used for #36 main column reinforcement.

SUBMITAL FOR PILE, FOOTING AND COLUMN CONSTRUCTION ONLY

DIST	COUNTY	ROUTE	KILOMETER POST TOTAL PROJECT	SHEET NO	TOTAL SHEETS
04	SF	80	12.6/13.2		

Marshall J Cullen 1-19-07
REGISTERED CIVIL ENGINEER DATE

REGISTERED PROFESSIONAL ENGINEER
M. J. CULLEN
No. C 40620
Exp. 03-31-07
CIVIL
STATE OF CALIFORNIA

PLANS APPROVAL DATE

The State of California or its officers or agents shall not be responsible for the accuracy or completeness of electronic copies of this plan sheet.

Caltrans now has a web site! To get to the web site, go to: http://www.dot.ca.gov

PILE DATA - CIDH CONCRETE PILES WITH PERMANENT STEEL CASING

LOCATION		NOMINAL RESISTANCE COMPRESSION	TENSION	PILE CUT OFF ELEV	STEEL CASING TIP ELEV	LIMITS OF SECTION B-B	CIDH PILE DESIGN TIP ELEV (1)	(2)	CIDH SPECIFIED TIP ELEV
Bent 39	North Column	13.8 MN	0	50.2	46.5	2.7 m	36.5	35.0	35.0
	South Column	13.8 MN	0	50.2	43.8	2.6 m	35.0	35.0	35.0
Bent 40	North Column	13.8 MN	0	50.4	42.8	2.6 m	31.5	33.6	31.5
	South Column	13.8 MN	0	50.4	44.3	2.5 m	35.2	35.2	35.2
Bent 41	North Column	13.8 MN	0	50.6	40.7	2.4 m	30.8	30.8	30.8
	South Column	13.8 MN	0	50.6	43.3	2.3 m	36.9	33.8	33.8
Bent 42	North Column	13.8 MN	0	50.8	40.4	2.2 m	26.1	29.5	26.1
	South Column	13.8 MN	0	50.8	38.7	2.1 m	30.1	31.0	30.1
Bent 43	North Column	13.8 MN	0	51.0	40.0	2.0 m	25.4	29.7	25.4
	South Column	13.8 MN	0	51.0	39.5	1.9 m	25.4	29.7	25.4
Bent 44	North Column	13.8 MN	0	51.2	39.0	2.0 m	26.5	29.9	26.5
	South Column	13.8 MN	0	51.2	39.0	1.8 m	25.6	29.9	25.6

Pile Data Notes :

(1) Design Tip Elevation Controlled by Compression Demands

(2) Design Tip Elevation Controlled by Lateral Demands

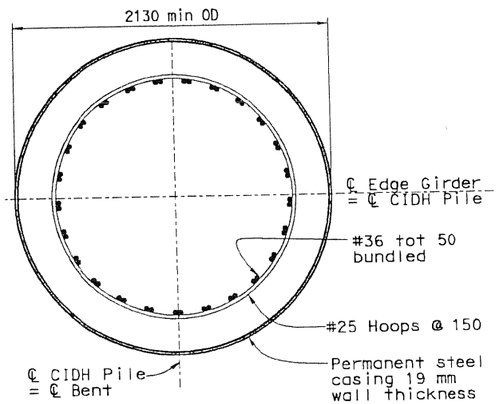

SECTION C-C

1:20

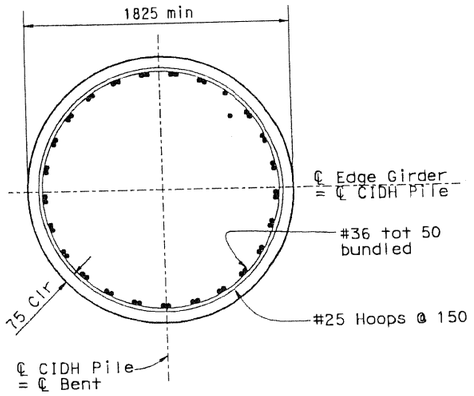

SECTION D-D

1:20

Caltrans Metric

ALL DIMENSIONS ARE IN MILLIMETERS UNLESS OTHERWISE SHOWN

ORIGINAL SCALE IN MILLIMETERS FOR REDUCED PLANS 0 10 20 30 40 50 60 70 80 90 100

	BY	CHECKED
DESIGN	M. J. Cullen	G. Schuster
DETAILS	G. Souza/T.Cotton/A. Chen	G. Schuster
QUANTITIES	M. J. Cullen	G. Schuster

SHEET 83 OF 85

STATE OF CALIFORNIA
DEPARTMENT OF TRANSPORTATION

DIVISION OF ENGINEERING SERVICES
STRUCTURE DESIGN
DESIGN BRANCH 5

CU 04251
EA 0120P1

FILE => 34-0006-1-percoldet01.dgn

BRIDGE NO. 34-0006
KILOMETER POST NA

DISREGARD PRINTS BEARING EARLIER REVISION DATES →

REVISION DATES: 10-16-06 | 11-21-06 | 12-01-06 | 12-18-06 | 12-21-06 | 12-28-06 | 01-03-07 | 01-08-07

WEST TIE IN PHASE 1
YBI VIADUCT REPLACEMENT
PERMANENT COLUMN/CIDH PILE DETAILS NO. 1

SHEET 11 OF 33

STRUCTURES DESIGN DETAIL SHEET (METRIC) (REV.03-17-04)

DATE PLOTTED => 18-JAN-2007
TIME PLOTTED => 11:00
USERNAME => AChen

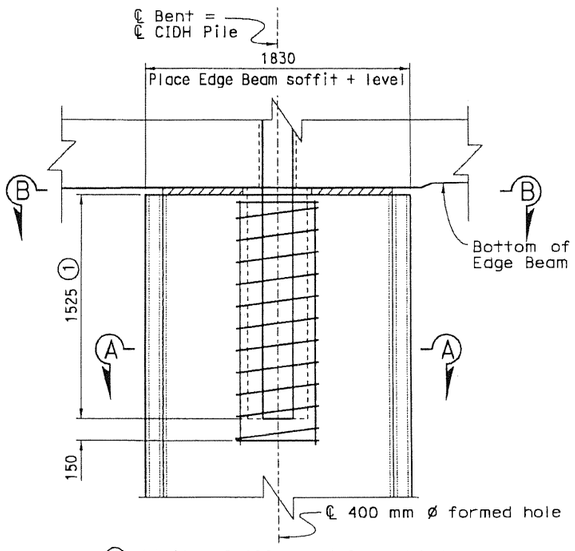

① Limits of 400 mm ø formed hole
Not all reinforcement shown

DETAIL A
1:20

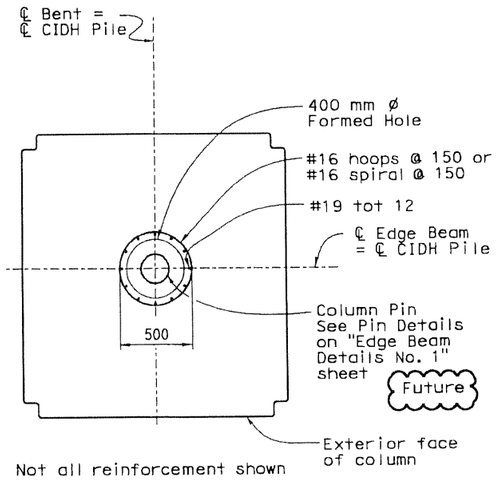

Not all reinforcement shown

SECTION A-A
1:20

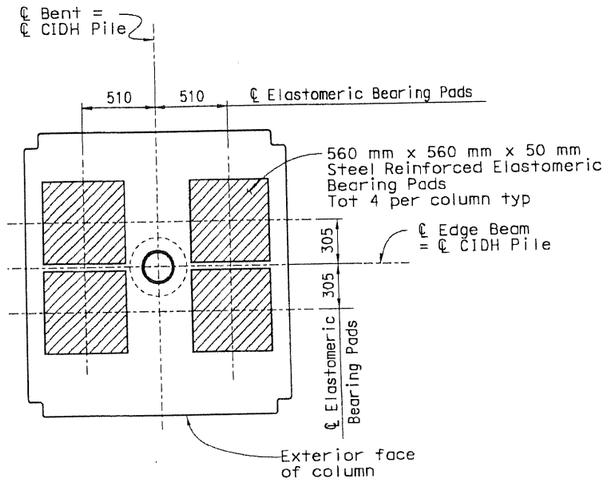

SECTION B-B
1:20

DIST	COUNTY	ROUTE	KILOMETER POST TOTAL PROJECT	SHEET No	TOTAL SHEETS
04	SF	80	12.6/13.2		

M J Cullen 1-19-07
REGISTERED CIVIL ENGINEER DATE

REGISTERED PROFESSIONAL ENGINEER
M. J. CULLEN
No. C 40620
Exp. 03-31-07
CIVIL
STATE OF CALIFORNIA

PLANS APPROVAL DATE

The State of California or its officers or agents shall not be responsible for the accuracy or completeness of electronic copies of this plan sheet.

Caltrans now has a web site! To get to the web site, go to: http://www.dot.ca.gov

SUBMITAL FOR PILE, FOOTING AND COLUMN CONSTRUCTION ONLY

CONTRACT NO. 04-0120R 4

CONTRACT CHANGE ORDER NO. 61

SHEET 84 OF 85

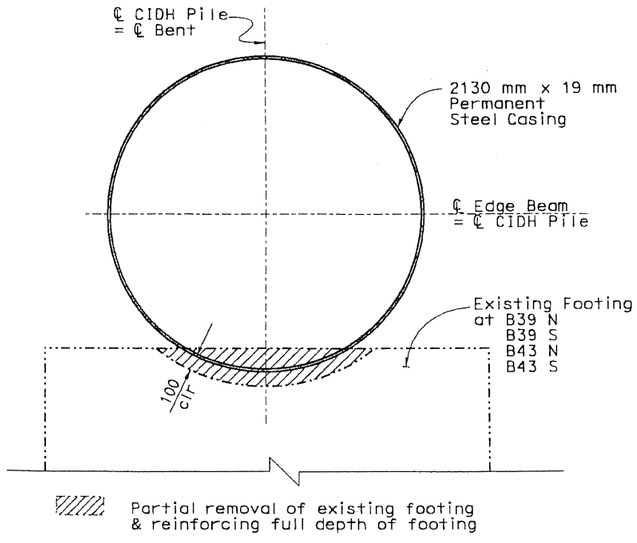

Partial removal of existing footing & reinforcing full depth of footing

PARTIAL REMOVAL OF EXISTING FOOTING
1:20

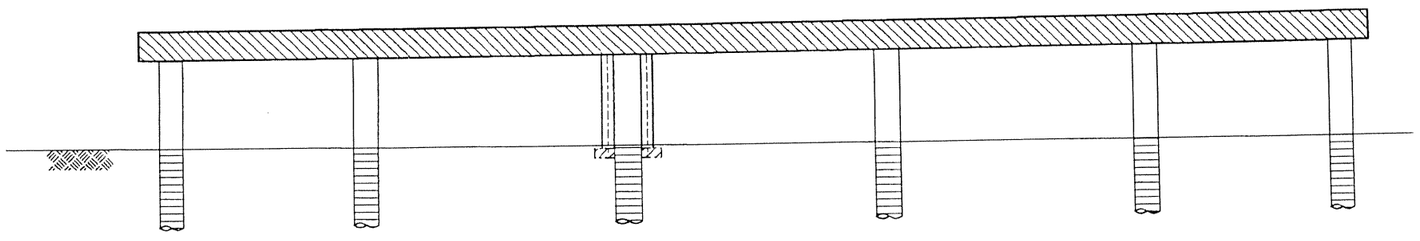

Structural Concrete Bridge
Structural Concrete Bridge (32 MPa @ 28 days)
Structural Concrete CIDH piling
Structural Concrete Bridge Footing

CONCRETE STRENGTH AND TYPE LIMITS
no scale

Caltrans Metric

	BY	CHECKED
DESIGN	G. Schuster	M. J. Cullen
DETAILS	G. Souza/A. Chen	M. J. Cullen
QUANTITIES	M. J. Cullen	G. Schuster

ALL DIMENSIONS ARE IN MILLIMETERS UNLESS OTHERWISE SHOWN

ORIGINAL SCALE IN MILLIMETERS FOR REDUCED PLANS 0 10 20 30 40 50 60 70 80 90 100

STATE OF CALIFORNIA
DEPARTMENT OF TRANSPORTATION

DIVISION OF ENGINEERING SERVICES
STRUCTURE DESIGN
DESIGN BRANCH 5

CU 04251
EA 0120P1

FILE => 34-0006-1-percoldet02.dgn

BRIDGE NO.	34-0006
KILOMETER POST	NA

DISREGARD PRINTS BEARING EARLIER REVISION DATES →

REVISION DATES: 12-16-05 | 12-22-06 | 12-22-06 | 01-04-07 | 01-11-07

WEST TIE IN PHASE 1
YBI VIADUCT REPLACEMENT
PERMANENT COLUMN/CIDH PILE DETAILS NO. 2

SHEET 12 OF 33

STRUCTURES DESIGN DETAIL SHEET (METRIC) (REV.03-17-04)

DATE PLOTTED => 19-JAN-2007 TIME PLOTTED => 11:12
USERNAME => AChen

CONTRACT NO. 04-0120R4

CONTRACT CHANGE ORDER NO. 61

SHEET 85 OF 85

DIST	COUNTY	ROUTE	KILOMETER POST TOTAL PROJECT	SHEET No	TOTAL SHEETS
04	SF	80	12.6/13.2		

M J Cullen 1-19-07
REGISTERED CIVIL ENGINEER DATE

PLANS APPROVAL DATE

REGISTERED PROFESSIONAL ENGINEER — W. J. CULLEN — No. C 40620 — Exp. 03-31-07 — CIVIL — STATE OF CALIFORNIA

The State of California or its officers or agents shall not be responsible for the accuracy or completeness of electronic copies of this plan sheet.

Caltrans now has a web site! To get to the web site, go to: http://www.dot.ca.gov

SUBMITAL FOR PILE, FOOTING AND COLUMN CONSTRUCTION ONLY

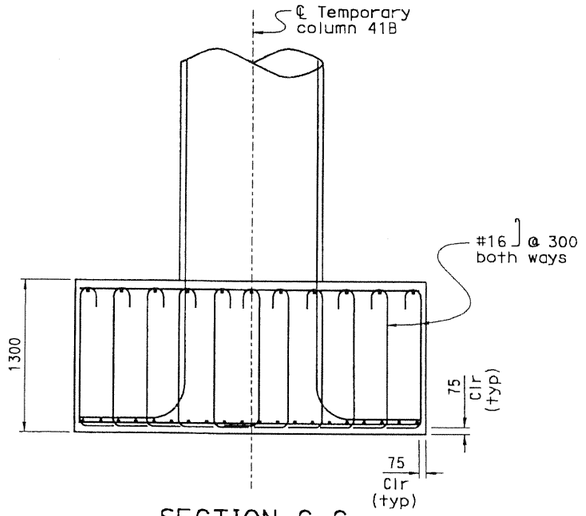

SECTION C-C
1:25

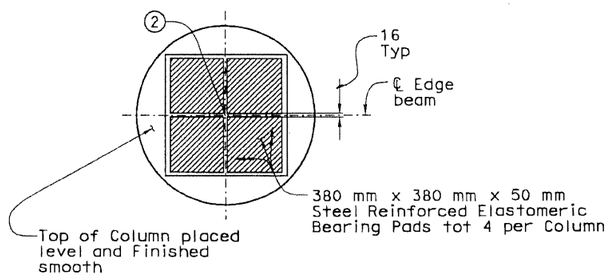

SECTION B-B
1:20

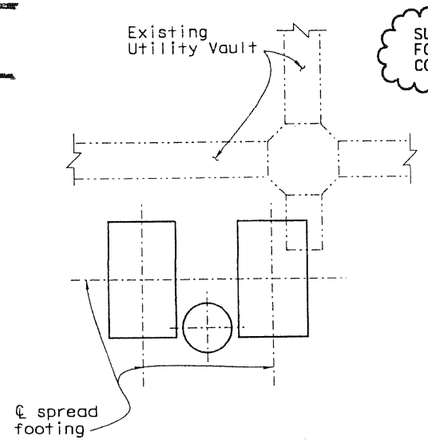

SECTION C-C
1:125

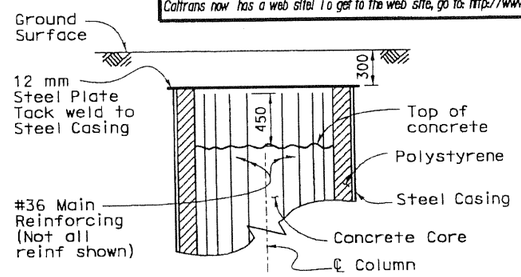

DETAIL A (TOP OF CIDH PILE)
1:25

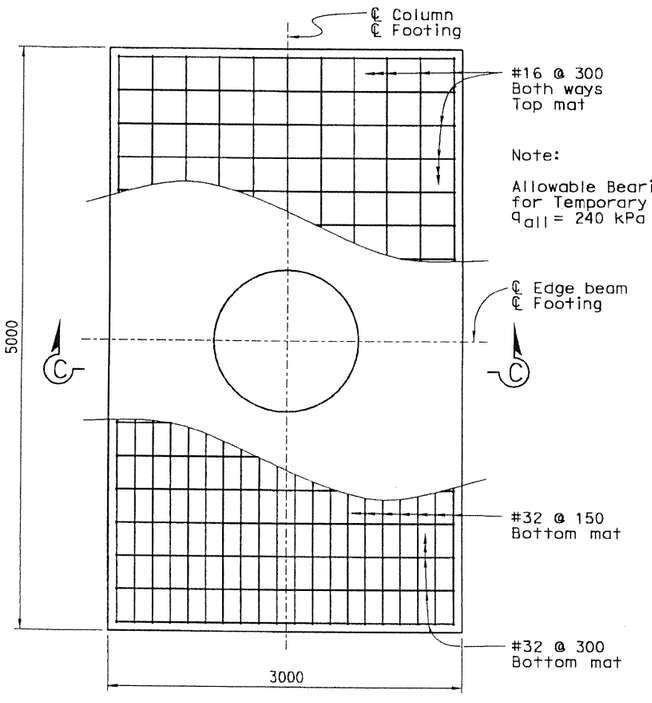

Temporary column 41A shown,
Temporary column 41B similar

FOOTING PLAN
1:25

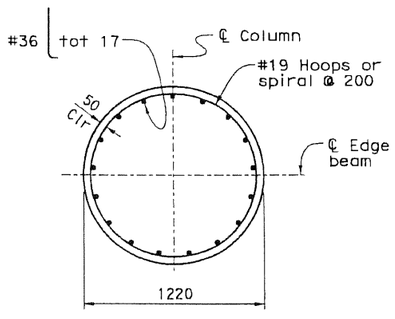

SECTION A-A
1:20

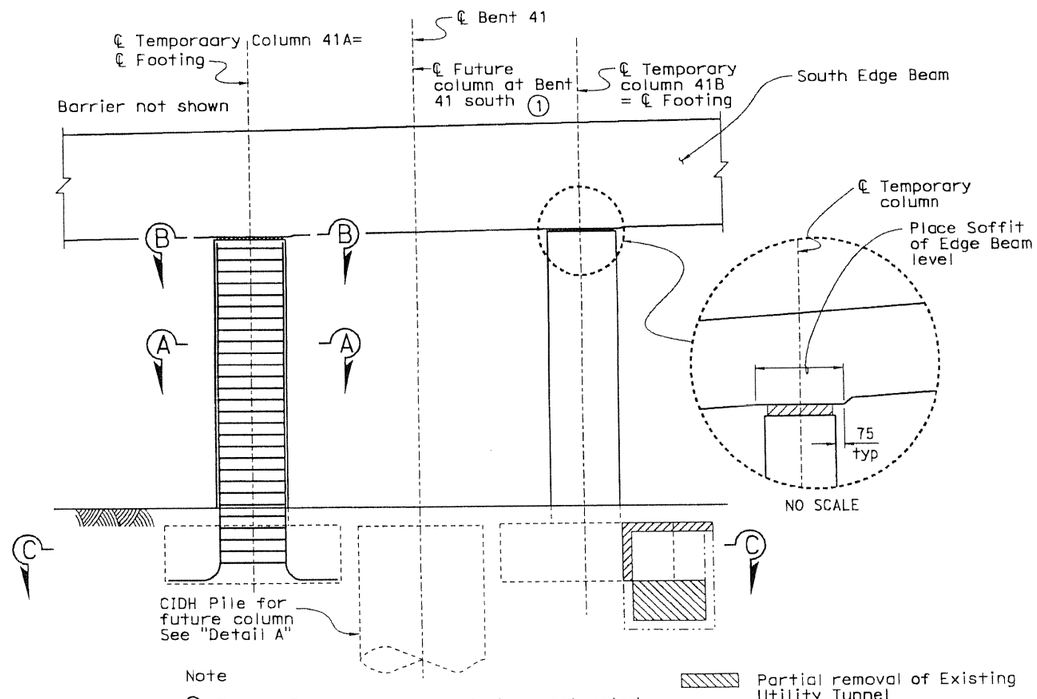

Note
(1) Future Permanent column to be constructed during YBI viaduct final modifications

Partial removal of Existing Utility Tunnel
Structure Backfill

ELEVATION
1:50

DESIGN	BY G. Schuster	CHECKED M. J. Cullen	STATE OF CALIFORNIA DEPARTMENT OF TRANSPORTATION	DIVISION OF ENGINEERING SERVICES STRUCTURE DESIGN DESIGN BRANCH 5	BRIDGE NO. 34-0006
DETAILS	BY G. Souza/A. Chen/T. Cotton	CHECKED M. J. Cullen			KILOMETER POST NA
QUANTITIES	BY M. J. Cullen	CHECKED G. Schuster			

WEST TIE IN PHASE 1
YBI VIADUCT REPLACEMENT
TEMPOPRARY COLUMN DETAILS

ALL DIMENSIONS ARE IN MILLIMETERS UNLESS OTHERWISE SHOWN

ORIGINAL SCALE IN MILLIMETERS FOR REDUCED PLANS 0 10 20 30 40 50 60 70 80 90 100

CU 04251
EA 0120P1

FILE => 34-0006-1-temp_coldet.dgn

DISREGARD PRINTS BEARING EARLIER REVISION DATES →

REVISION DATES: 12-21-06 | 12-21-06 | 01-10-07 | 01-14-07 | 01-16-07

SHEET 13 OF 33

STRUCTURES DESIGN DETAIL SHEET (METRIC) (REV.03-17-04)

DATE PLOTTED => 18-JAN-2007 TIME PLOTTED => 08:43
USERNAME => AChen

STATE OF CALIFORNIA - DEPARTMENT OF TRANSPORTATION

CONTRACT CHANGE ORDER

Change Requested by: Engineer

CCO 64	Suppl. No. 0	Contract No. 04 - 0120R4	Road SF-80-12.6/13.2	FED. AID LOC.: ACBRIM-080-1(097)N

To: CC MYERS INC

You are directed to make the following changes from the plans and specifications or do the following described work not included in the plans and specifications for this contract. ***NOTE: This change order is not effective until approved by the Engineer.***

Description of work to be done, estimate of quantities and prices to be paid. (Segregate between additional work at contract price, agreed price and force account.) Unless otherwise stated, rates for rental of equipment cover only such time as equipment is actually used and no allowance will be made for idle time. This last percentage shown is the net accumulated increase or decrease from the original quantity in the Engineer's Estimate.

Extra Work at Force Account:

Improve the existing access road located to the north of the W3L footing to create an all-weather access road, perform site improvements to create a temporary parking lot adjacent to Macalla Road and the Caltrans field office, and any other necessary work as directed by the Engineer.

For this work, payment will be in accordance with Section 4-1.03D, Extra Work, of the Standard Specifications, and Sectior 5-1.24, Force Account Payment, of the Special Provisions, and no other compensation will be allowed therefor.

No adjustment in contract time will be made since this work is not a controlling operation.

Estimated cost of Extra Work at Force Account $150,000.00

RECEIVED
DEC 11 06
0017136

Estimated Cost: Increase ☑ Decrease ☐ **$150,000.00**

By reason of this order the time of completion will be adjusted as follows: 0 days

Submitted by

Signature	Resident Engineer: MAHANTESH ANIGOL	Date
M U Anigol		12/4/06

Approval Recommended by

Signature	Construction Engineer: MAHANTESH ANIGOL	Date
M U Anigol		12/4/06

Engineer Approval by

Signature	(Print name and title) JASON TOM - Chief	Date
		1/2/07

We the undersigned contractor, have given careful consideration to the change proposed and agree, if this proposal is approved, that we will provide all equipment, furnish the materials, except as may otherwise be noted above, and perform all services necessary for the work above specified, and will accept as full payment therefor the prices shown above.

NOTE: If you, the contractor, do not sign acceptance of this order, your attention is directed to the requirements of the specifications as to proceeding with the ordered work and filing a written protest within the time therein specified.

Contractor Acceptance by

Signature	(Print name and title)	Date
	DANIEL E. Hamick, President	12/11/06

CONTRACT CHANGE ORDER

Change Requested by: Engineer

CCO 64	Suppl. No. 1	Contract No. 04 - 0120R4	Road SF-80-12.6/13.2	FED. AID LOC.: ACBRIM-080-1(097)N

To: **CC MYERS INC**

You are directed to make the following changes from the plans and specifications or do the following described work not included in the plans and specifications for this contract. ***NOTE: This change order is not effective until approved by the Engineer.***

Description of work to be done, estimate of quantities and prices to be paid. (Segregate between additional work at contract price, agreed price and force account.) Unless otherwise stated, rates for rental of equipment cover only such time as equipment is actually used and no allowance will be made for idle time. This last percentage shown is the net accumulated increase or decrease from the original quantity in the Engineer's Estimate.

Extra Work at Force Account:

As authorized by the Engineer, and in accordance with Section 5-1.01, "Working Drawings", and Section 5-1.02 "Integrated Shop Drawings" of the Special Provisions for Contract Change Order No. 64, produce integrated shop drawings (ISD) for the column to footing and column to bent cap interfaces for the YBI Transition Structures, Bridge Nos. 34-0006 L/R, at Bent W3L.

The attached contract plans and specifications are for Bent W3L only.

This work shall be completed prior to the start of column reinforcing steel fabrication. The Contractor shall ensure that all reinforcement be placed in accordance with the conflict-free ISD drawings.

For this work, payment will be in accordance with Section 4-1.03D, Extra Work, of the Standard Specifications, and Section 5-1.24, Force Account Payment, of the Special Provisions, and no other compensation will be allowed therefor.

No adjustment in contract time will be made since this work is not a controlling operation.

Estimated cost of Extra Work at Force Account $80,000.00

Extra Work at Lump Sum:

Construct the footing, and column for the Yerba Buena Island Transition Structures at Bent W3 Left to the elevation of 16M above the top of footing in accordance with the attached plans and specifications, and as authorized by the Engineer. Supply and install tie-downs and backfill the footing to finished grade. The attached contract plans and specifications are for Bent W3L only.

This work shall be completed by March 15, 2007. Should the work not be completed, at no additional cost to the State, the partially completed footing and column shall be protected in place from exposure to the elements and corrosion, and the area shall be backfilled and restored to the existing elevation. At the next available work window, the balance of the outstanding work shall be completed with no additional compensation allowed.

For this work, the Contractor will be paid the sum of $5,755,000.00. This amount constitutes full compensation, including markups, for all labor, equipment, materials, and all incidentals, including concrete washouts, to complete the work of this change except for the following items:

1) All associated SWPPP work, except for concrete washouts, to be paid for separately under their respective bid items, or force account as agreed to in advance between parties.

2) The remaining 50% of all flagging work done under this change order is to be paid by Contract Change Order No. 1

All work shall be performed in accordance with the contract documents.

Total Cost of Extra Work at Lump Sum $5,755,000.00

CONTRACT CHANGE ORDER

Change Requested by: Engineer

CCO 64	Suppl. No. 1	Contract No. 04 - 0120R4	Road SF-80-12.6/13.2	FED. AID LOC.: ACBRIM-080-1(097)N

Estimated Cost: Increase ☑ Decrease ☐ **$5,835,000.00**

By reason of this order the time of completion will be adjusted as follows: 0 days

Submitted by

Signature	Resident Engineer	Date
M. U. Anigol	MAHANTESH ANIGOL	3/14/07

Approval Recommended by

Signature	Area Construction Manager	Date
	JASON TOM	3/14/07

Engineer Approval by

Signature	SFOBB Construction Manager	Date
P Siegenthaler	PETER SIEGENTHALER	3/29/07

We the undersigned contractor, have given careful consideration to the change proposed and agree, if this proposal is approved, that we will provide all equipment, furnish the materials, except as may otherwise be noted above, and perform all services necessary for the work above specified, and will accept as full payment therefor the prices shown above.

NOTE: If you, the contractor, do not sign acceptance of this order, your attention is directed to the requirements of the specifications as to proceeding with the ordered work and filing a written protest within the time therein specified.

Contractor Acceptance by

Signature	(Print name and title)	Date
	DANIEL E. HIMICK, PRESIDENT	3/21/07

Supplemental Specifications for Bent W3 Left footing only

CHANGE
CCO # 64 s1

CONTRACT NO. 64-0120R4

CONTRACT CHANGE ORDER NO. 64-S1

SHEET 3 OF 150

5-1.02 INTEGRATED SHOP DRAWINGS

Difficult reinforcement placement is anticipated at the

A. Reinforcement at column penetrations for drain pipes and electrical conduits
B. Reinforcement at column to footing intersections.
C. Reinforcement at column to bent cap intersections.

These locations are highly congested with reinforcing steel, high strength rods, post-tensioning strand tendons, anchor bolts, and other concrete embedded items as shown on the plans. It is anticipated that various dimensional conflicts may be encountered between the planned locations of these embedded items.

The Contractor shall develop three-dimensional integrated shop drawings (ISD's) for all locations listed above in accordance with the details shown on the plans and the requirements of this section. ISD's shall conform to Section "Working Drawings," of these special provisions. ISD's shall be prepared under the supervision of an engineer who is registered as a Civil Engineer in the State of California. ISD's shall be composite placing drawings to scale and in sufficient detail to show the relative positions of all items that are to be embedded in the concrete and their embedment depth as necessary to demonstrate compatibility of items within the concrete.

Prior to commencing work on the ISD, the Contractor (including any sub-consultants hired to work on the ISD) shall attend a meeting with the Engineer to discuss the ISD work.

Embedded items that are to be shown on the ISD's shall include but are not limited to, the following:

A. Bar reinforcing steel and splices including lap, welded, and mechanical splices
B. Prestressing ducts
C. Drainage pipe
D. Other items, as shown on the plans or added by the Contractor

The three-dimensional ISD's shall be adequate to ensure that there will be no conflict between the planned positions of any embedded items and that concrete cover will be adequate.

If conflicts are discovered during the preparation of ISD's, the Contractor shall revise the working drawings for one or more of the embedded items to eliminate the conflict or provide proper cover or spacing. If a conflict requires that bar reinforcement locations be adjusted, the Contractor shall proceed with performing reinforcing steel adjustments in the ISD's prior to submitting the changes to the Engineer.

The ISD's to be submitted to the Engineer shall include the following:

A. ISD submittal shall be in two-dimensional format utilizing the three-dimensional layouts as input.
B. Three sets of the ISD's corresponding to the details as shown on the plans with incorporation of any Contractor's adjustments in the locations of embedded items. These ISD's shall resolve all conflicts and satisfy concrete cover requirements as shown on the plans. The initial ISD submittal for a particular area shall clearly identify all adjustments to the locations of embedded items made as part of the Contractor's conflict resolution process.
C. Three copies of the ISD's in electronic form on compact discs or tape for use by the Engineer.

CAD files of the contract drawings will not be made available to the Contractor.

After completed ISD's are received by the Engineer, the Contractor shall allow the Engineer 1 week for review and approval. For each revised ISD's submitted by the Contractor, the Contractor shall allow the Engineer an additional 1 week for review and approval. Construction of the items listed above shall not begin until the Engineer reviews and approves the complete ISD's with all conflicts resolved.

No extension of time will be permitted for the Contractor's failure to identify all conflicts or to complete the ISD's as required by these special provisions.

Full compensation for preparing ISD's, including all revisions necessary due to conflict resolution measures taken by the Contractor, shall be considered as included in the contract prices paid for the various items of work involved and no additional compensation will be allowed therefor.

CHANGE
CCO # 64 S1

CONTRACT NO. 04-0120R4

CONTRACT CHANGE ORDER NO. 64-S1

SHEET 4 OF 150

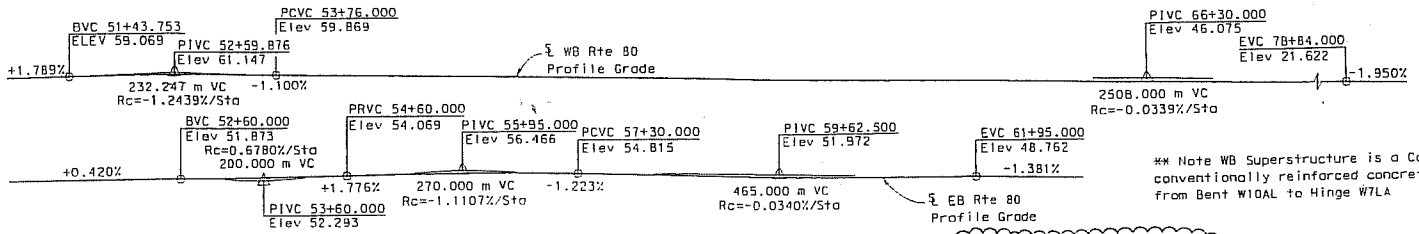

** Note WB Superstructure is a Cast-in-Place conventionally reinforced concrete box girder from Bent W10AL to Hinge W7LA

PROFILE GRADE
NO SCALE

Note: Work shown in addition to that designated as "Advance Const Work" is for informational purposes only.

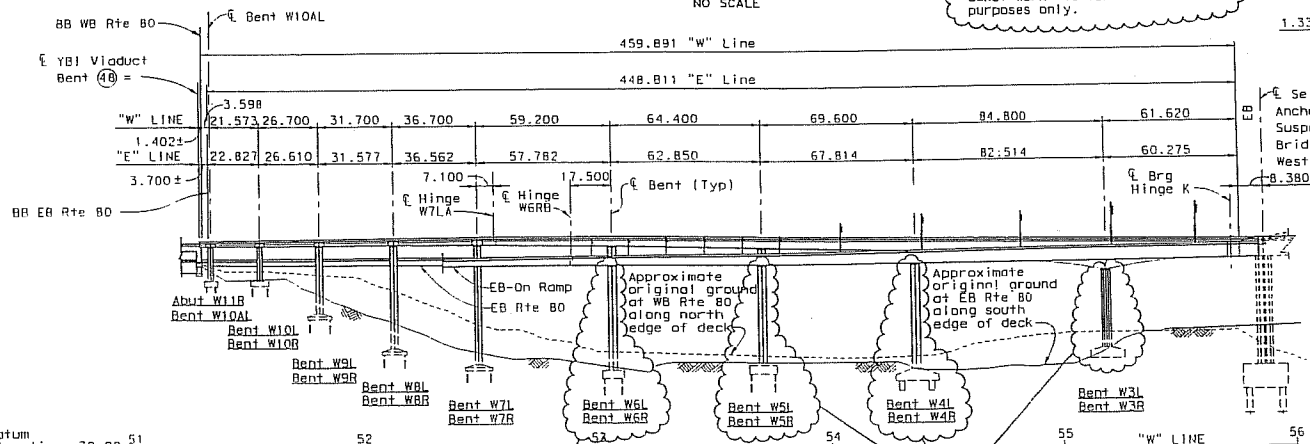

ADVANCE CONST WORK — ELEVATION 1:1000 — ADVANCE CONST WORK

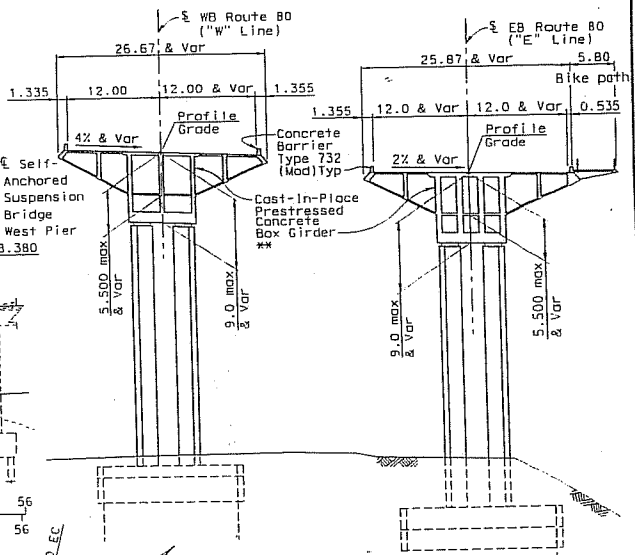

TYPICAL SECTION
(Bent W3L & W3R Shown)
1:300

Notes:
For approximate bridge quantities and pile data table, see "General Notes" sheet.

——— Indicates existing structures.

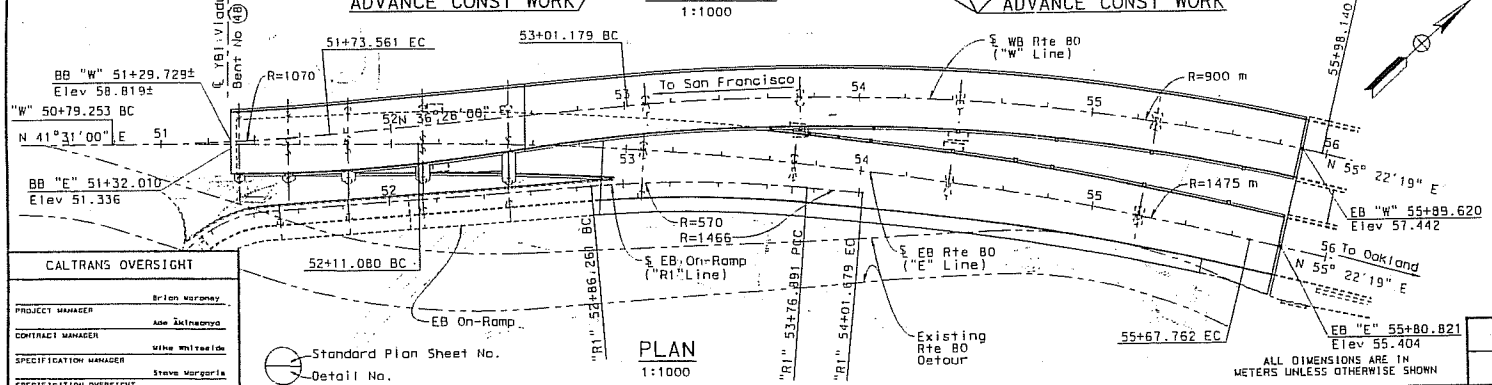

PLAN 1:1000

ALL DIMENSIONS ARE IN METERS UNLESS OTHERWISE SHOWN

DIST	COUNTY	ROUTE	TOTAL PROJECT	NO.	SHEETS
04	SF	80		57	137

REGISTERED ENGINEER - CIVIL
PLANS APPROVAL DATE
The State of California or its officers or agents shall not be responsible for the accuracy or completeness of electronic copies of this plan sheet.
REGISTERED PROFESSIONAL ENGINEER — A.L. ELY — No. 18880 — Exp. 6-30-07 — CIVIL — STATE OF CALIFORNIA

T.Y. LIN / MOFFATT & NICHOL
TWO HARRISON STREET
SAN FRANCISCO, CA 94105

SUPPLEMENTAL SHEET 04-0120R4
CONTRACT CHANGE ORDER NO. 64-S1
SHEET 5 OF 150

CALTRANS OVERSIGHT	
PROJECT MANAGER	Brian Maroney
CONTRACT MANAGER	Ade Akinsanya
SPECIFICATION MANAGER	Mike Whiteside
SPECIFICATION OVERSIGHT	Steve Margaris

DESIGN OVERSIGHT: JOHN HOOK, BERNARD CHAN, JUAN F. CARPIO
SIGN OFF DATE

DESIGN	BY Desai	CHECKED Jain	LOAD FACTOR DESIGN	LIVE LOADING: HS20-44 AND ALTERNATIVE AND PERMIT DESIGN LOAD			
DETAILS	BY van Ryn/Zucchi/Wai	CHECKED Jain	LAYOUT	BY Desai	CHECKED Alcaraz		
QUANTITIES	BY Liao	CHECKED E. Nichol	SPECIFICATIONS	BY J.Ely	PLANS AND SPECS COMPARED Jain		

PREPARED FOR THE STATE OF CALIFORNIA DEPARTMENT OF TRANSPORTATION

Jal Birdy
PROJECT ENGINEER

CU 04251
EA 012051

BRIDGE NO.	
34-0006 L/R	
KILOMETER POST	
12.8	

DISREGARD PRINTS BEARING EARLIER REVISION DATES

REVISION DATES (PRELIMINARY STAGE ONLY)								SHEET	OF
11-04-05	11-07-05	11-14-05	2-24-06	3-24-06	3-31-06	5-26-06	11-20-06	1	65

ORIGINAL SCALE IN MILLIMETERS FOR REDUCED PLANS 0 10 20 30 40 50 60 70 80 90 100

FILE = k:\4141-06\CAD01\SF-Final Const\Adv Const Pkg 1R2\eagp0.dgn

SAN FRANCISCO OAKLAND BAY BRIDGE
EAST SPAN SEISMIC SAFETY PROJECT
YBI TRANSITION STRUCTURES
ADVANCE CONST PACKAGE NO. 1R2
GENERAL PLAN

Caltrans Metric

Nov 29, 2006
DATE PLOTTED = 11/29/2006 TIME PLOTTED = 3:21:35 PM
USERNAME = fsoomsan
0 0 5 1 0 2 6 FEB 13 07

APPROXIMATE BRIDGE QUANTITIES

	WB STRUCTURE	EB STRUCTURE	TOTAL
STRUCTURE EXCAVATION (BRIDGE)	2898	5919	8820 M3
STRUCTURE EXCAVATION (TYPE D)	-	542	540 M3
STRUCTURE EXCAVATION (TYPE H)	244	708	950 M3
STRUCTURE EXCAVATION (CLASS II)	-	54	50 M3
STRUCTURE EXCAVATION (ROCK)	3098	3945	7040 M3
STRUCTURE BACKFILL (BRIDGE)	2223	5355	7580 M3
FURNISH STEEL PILING (W 360 X 237)	6521	4164	10685 M
DRIVE STEEL PILE (W 360 X 237)	352	240	592 EA
2400MM CAST-IN-DRILLED-HOLE CONCRETE PILING	-	109	109 M
2400MM CAST-IN-DRILLED HOLE CONCRETE PILING (ROCK SOCKET)	-	68	68 M
TIEDOWN ANCHOR	68	36	104 EA
STRUCTURAL CONCRETE, BRIDGE FOOTING	3925	5562	9490 M3
STRUCTURAL CONCRETE, BRIDGE	3573	3777	7350 M3
BAR REINFORCING STEEL (BRIDGE)	1375072	1835160	3210230 KG
BRIDGE DECK DRAINAGE SYSTEM	487	341	830 KG

GENERAL NOTES

Load Factor Design

Design: Caltrans Design Specifications-April 2000 (LFD)
(1996 AASHTO with interims and revisions by Caltrans)
Dead Load: Includes 1675 N/m2 for future wearing surface on roadbed
Live Load: HS20-44 and alternative and permit design load
Bike Path Live Load: 4000 N/m2
Future Mass Transit Loading:

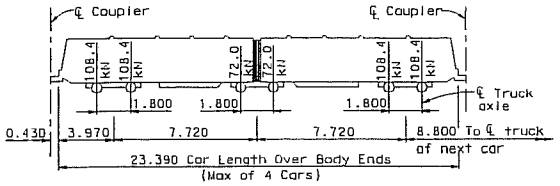

Seismic Loading: Refer to project specific seismic design criteria for San Francisco Oakland Bay Bridge East Span Seismic Safety Project Dated 01-08-00 See "Site Specific Response Spectra"

Reinforced Concrete: Fy = 420 MPa
F'c = See "Concrete Strength & Type Limits"

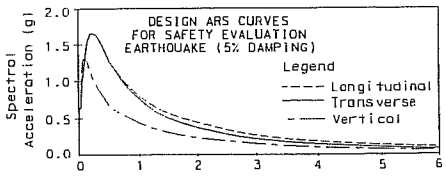

SITE SPECIFIC RESPONSE SPECTRA

PILE DATA

LOCATION	DESIGN LOADING	NOMINAL RESISTANCE COMPRESSION	NOMINAL RESISTANCE TENSION	DESIGN TIP ELEVATION (1)	(2)	(3)	SPECIFIED TIP ELEVATION	MINIMUM ROCK SOCKET LENGTH
PILE TYPE W 360 x 237								
BENT W6L	1350 kN	2700 kN	1350 kN	-11.5	-6.5	-2.0	-11.5	
BENT W5L	1350 kN	2700 kN	1350 kN	-10.5	-6.5	-3.0	-10.5	
BENT W6R NORTH COLUMN	1350 kN	2700 kN	1350 kN	-11.5	-6.5	-2.0	-11.5	
BENT W6R SOUTH COLUMN	1350 kN	2700 kN	1350 kN	-18.0	-13.5	-4.5	-18.0	
BENT W5R	1350 kN	2700 kN	1350 kN	-16.5	-11.0	-5.5	-16.5	
2400 mm DIA CIDH CONCRETE PILES								
BENT W4R PILE NO. 1	-	25200 kN	8900 kN	-15.0	-15.0	-15.0	-15.0	3.5
BENT W4R PILE NOS. 2 & 3	-	25200 kN	8900 kN	-13.5	-13.5	-13.5	-13.5	3.5
BENT W4R PILE NOS. 4,5 & 6	-	25200 kN	8900 kN	-12.5	-12.5	-12.5	-12.5	3.5
BENT W4R PILE NOS. 7 & 8	-	25200 kN	8900 kN	-12.0	-12.0	-12.0	-12.0	4.0
BENT W4R PILE NOS. 9,10 & 11	-	25200 kN	8900 kN	-10.0	-10.0	-10.0	-10.0	4.0
BENT W4R PILE NO.12	-	25200 kN	8900 kN	-9.5	-9.5	-9.5	-9.5	4.5
BENT W4R PILE NOS. 13,14 & 15	-	25200 kN	8900 kN	-8.0	-8.0	-8.0	-8.0	4.5
BENT W4R PILE NOS. 16 & 17	-	25200 kN	8900 kN	-6.0	-6.0	-6.0	-6.0	4.5

Design tip elevation is controlled by the following demands: (1) Compression, (2) Tension, (3) Lateral. Rock socket lengths shown represent minimum embedment into moderately hard rock.

FOOTING PRESSURE	ALLOWABLE	ULTIMATE	MAX DESIGN (SERVICE LOAD)
BENT W4L	1800 kN/m2	5400 kN/m2	765 kN/m2
BENT W3L	1550 kN/m2	4650 kN/m2	765 kN/m2
BENT W3R	1350 kN/m2	4050 kN/m2	765 kN/m2

APPLICABLE STANDARD PLANS (DATED JULY 1999)

A10A	ABBREVIATIONS
A10B	SYMBOLS
A62B	LIMITS OF PAYMENT FOR EXCAVATION AND BACKFILL - BRIDGE SURCHARGE AND WALL
A62C	LIMITS OF PAYMENT FOR EXCAVATION AND BACKFILL - BRIDGE
B0-1	BRIDGE DETAILS
B7-6	DECK DRAINS TYPES D-1 AND D-2

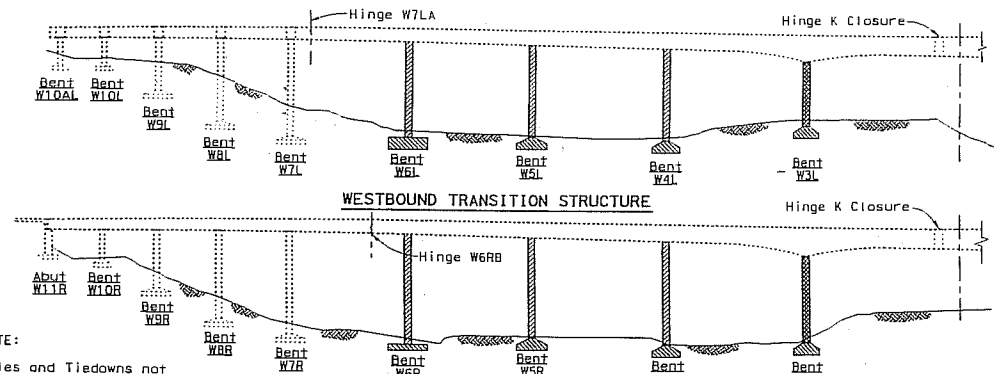

WESTBOUND TRANSITION STRUCTURE

NOTE:
Piles and Tiedowns not shown for clarity.

EASTBOUND TRANSITION STRUCTURE

ALL DIMENSIONS ARE IN METERS UNLESS OTHERWISE SHOWN

CONCRETE STRENGTH & TYPE LIMITS

Structural concrete, bridge (35 MPa at 28 days)
Structural concrete, bridge (25 MPa at 28 days)
Structural concrete, bridge footing (25 MPa at 28 days)

INDEX TO BRIDGE PLANS

1.	GENERAL PLAN	15.	BENT W3L DETAILS NO. 2
2.	GENERAL NOTES	16.	BENT W6R DETAILS NO. 1
3.	FOUNDATION PLAN NO. 1	17.	BENT W6R DETAILS NO. 2
4.	FOUNDATION PLAN NO. 2	18.	BENT W6R DETAILS NO. 3
5.	PILE & TIEDOWN ANCHOR DETAILS	19.	BENT W5R DETAILS NO. 1
6.	BENT ELEVATIONS W6 & W5	20.	BENT W5R DETAILS NO. 2
7.	BENT ELEVATIONS W4 & W3	21.	BENT W4R DETAILS NO. 1
8.	BENT W6L DETAILS NO. 1	22.	BENT W4R DETAILS NO. 2
9.	BENT W6L DETAILS NO. 2	23.	BENT W3R DETAILS NO. 1
10.	BENT W5L DETAILS NO. 1	24.	BENT W3R DETAILS NO. 2
11.	BENT W5L DETAILS NO. 2	25-45.	LOG OF TEST BORINGS NO. 1 TO NO. 21
12.	BENT W4L DETAILS NO. 1	46-65.	"AS BUILT" LOG OF TEST BORINGS NO. 1 TO NO. 20
13.	BENT W4L DETAILS NO. 2		
14.	BENT W3L DETAILS NO. 1		

SUPPLEMENTAL SHEET 04-0120R4

CONTRACT CHANGE ORDER NO. 64-S1
SHEET 62 OF 150

Caltrans Metric

04	SF	80		58	137

REGISTERED ENGINEER - CIVIL
A.L. ELY No. 18880 Exp. 6-30-07 CIVIL STATE OF CALIFORNIA
PLANS APPROVAL DATE
The State of California or its officers or agents shall not be responsible for the accuracy or completeness of electronic copies of this plan sheet.

T.Y. LIN / MOFFATT & NICHOL
TWO HARRISON STREET
SAN FRANCISCO, CA 94105

DESIGN OVERSIGHT: JOHN WOOK, BERNARD CHAN, JUAN F. CARPIO
SIGN OFF DATE
Rev. Date: 5-18-98

	BY	CHECKED
DESIGN	Desai	Jain
DETAILS	van Ryn/Zucchi/Wai	Jain
QUANTITIES	Liao	E. Nichol

PREPARED FOR THE STATE OF CALIFORNIA DEPARTMENT OF TRANSPORTATION

Joi Girdy
PROJECT ENGINEER

CU 04251
EA 012051

BRIDGE NO. 34-0006 L/R
KILOMETER POST 12.8

SAN FRANCISCO OAKLAND BAY BRIDGE
EAST SPAN SEISMIC SAFETY PROJECT

YBI TRANSITION STRUCTURES

ADVANCE CONST PACKAGE NO.1R2

GENERAL NOTES

DISREGARD PRINTS BEARING EARLIER REVISION DATES

REVISION DATES (PRELIMINARY STAGE ONLY)										SHEET	OF
11/24/98	12/2/98	12/11/98	1/26/99	3/26/99	7/23/99	1/24/00	3/24/00	5/26/00	11/24/00	2	65

ORIGINAL SCALE IN MILLIMETERS FOR RECORD PLANS 0 10 20 30 40 50 60 70 80 90 100

FILE => R:\4141-06\CADD\15%final Const\Adv Const Pkg 1R2\edit\p02.dgn

Nov 29, 2006

DATE PLOTTED => 11/29/2006 TIME PLOTTED => 3:21:48 PM
USERNAME => tsamson

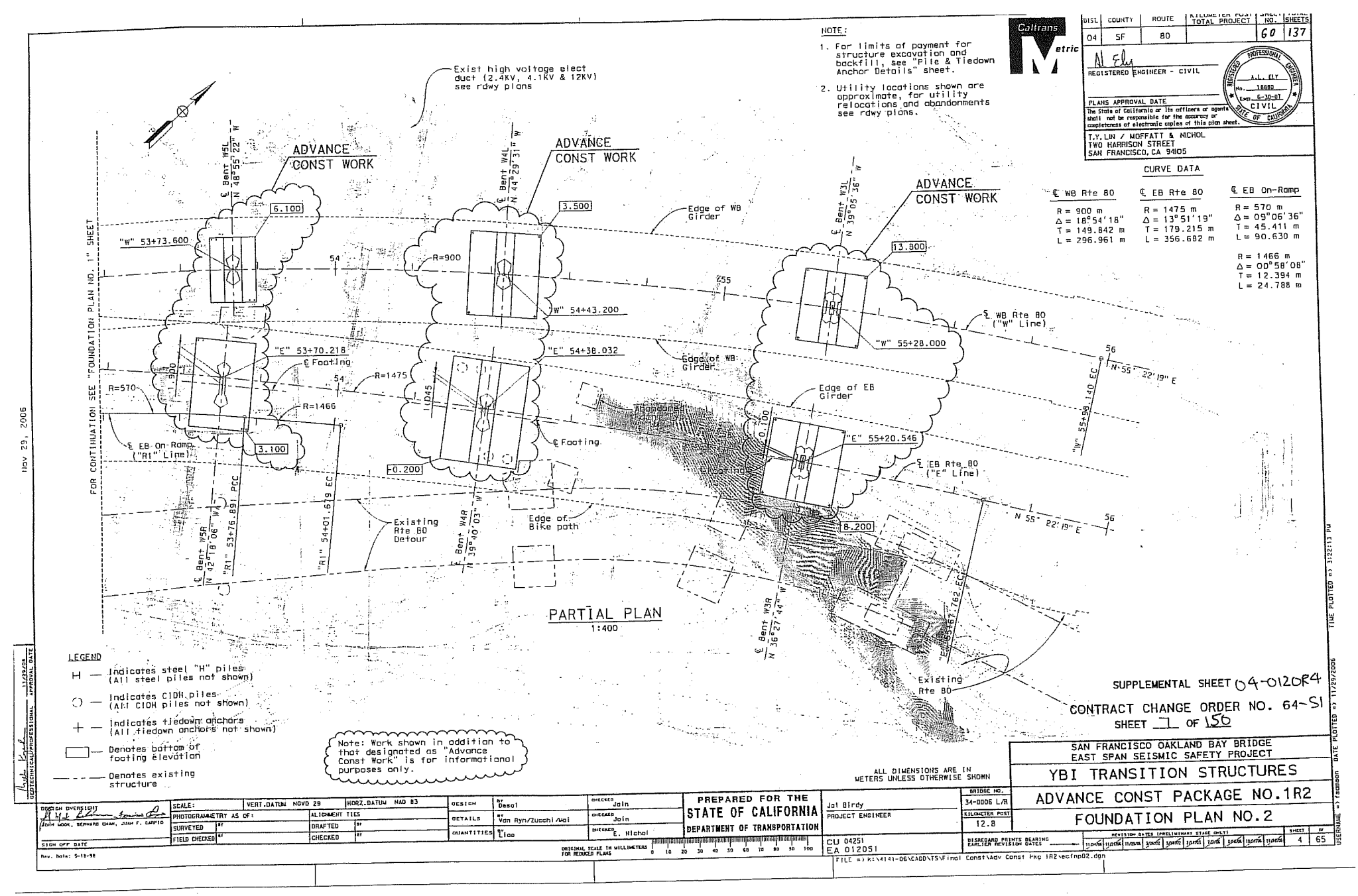
NOTE:
1. For limits of payment for structure excavation and backfill, see "Pile & Tiedown Anchor Details" sheet.
2. Utility locations shown are approximate, for utility relocations and abandonments see rdwy plans.
Caltrans Metric
Exist high voltage elect duct (2.4KV, 4.1KV & 12KV) see rdwy plans
ADVANCE CONST WORK
℄ Bent W5L N 48°55'22" W
℄ Bent W4L N 44°29'31" W
℄ Bent W3L N 39°05'36" W
6.100
3.500
13.800
"W" 53+73.600
"W" 54+43.200
"W" 55+28.000
"E" 53+70.218
"E" 54+38.032
"E" 55+20.546
℄ Footing
Edge of WB Girder
Edge of EB Girder
R=900
R=1475
R=1466
R=570
℄ EB On-Ramp ("R1" Line)
℄ WB Rte 80 ("W" Line)
℄ EB Rte 80 ("E" Line)
3.100
0.200
8.200
"R1" 53+76.891 PCC
"R1" 54+01.619 EC
Existing Rte 80 Detour
Edge of Bike path
Abandoned
℄ Bent W5R N 42°18'06" W
℄ Bent W4R N 39°40'03" W
℄ Bent W3R N 36°27'44" W
N 55° 22' 19" E
"W" 55+99.140 EC
"R1" 55+67.762 EC
Existing Rte 80
FOR CONTINUATION SEE "FOUNDATION PLAN NO. 1" SHEET
PARTIAL PLAN
1:400
LEGEND
H — Indicates steel "H" piles (All steel piles not shown)
○ — Indicates CIDH piles (All CIDH piles not shown)
+ — Indicates tiedown anchors (All tiedown anchors not shown)
Denotes bottom of footing elevation
Denotes existing structure
Note: Work shown in addition to that designated as "Advance Const Work" is for informational purposes only.
ALL DIMENSIONS ARE IN METERS UNLESS OTHERWISE SHOWN
CURVE DATA
℄ WB Rte 80
R = 900 m
Δ = 18°54'18"
T = 149.842 m
L = 296.961 m
℄ EB Rte 80
R = 1475 m
Δ = 13°51'19"
T = 179.215 m
L = 356.682 m
℄ EB On-Ramp
R = 570 m
Δ = 09°06'36"
T = 45.411 m
L = 90.630 m
R = 1466 m
Δ = 00°58'08"
T = 12.394 m
L = 24.788 m
DIST 04 | COUNTY SF | ROUTE 80 | KILOMETER POST TOTAL PROJECT | SHEET NO. 60 | TOTAL SHEETS 137
REGISTERED ENGINEER - CIVIL
PLANS APPROVAL DATE
The State of California or its officers or agents shall not be responsible for the accuracy or completeness of electronic copies of this plan sheet.
REGISTERED PROFESSIONAL ENGINEER A.L. ELY No. 18880 Exp. 6-30-07 CIVIL STATE OF CALIFORNIA
T.Y. LIN / MOFFATT & NICHOL
TWO HARRISON STREET
SAN FRANCISCO, CA 94105
SUPPLEMENTAL SHEET 04-0120R4
CONTRACT CHANGE ORDER NO. 64-51
SHEET 1 OF 156
SAN FRANCISCO OAKLAND BAY BRIDGE
EAST SPAN SEISMIC SAFETY PROJECT
YBI TRANSITION STRUCTURES
ADVANCE CONST PACKAGE NO.1R2
FOUNDATION PLAN NO.2
DESIGN OVERSIGHT
JOHN WOOK, BERNARD CHAM, JUAN F. CARPIO
SIGN OFF DATE
SCALE:
VERT.DATUM NGVD 29
HORZ.DATUM NAD 83
PHOTOGRAMMETRY AS OF:
ALIGNMENT TIES
SURVEYED
DRAFTED
FIELD CHECKED
CHECKED
DESIGN Desai
DETAILS Van Ryn/Zucchi/Wai
QUANTITIES Tiao
CHECKED Jain
CHECKED Jain
CHECKED E. Nichol
PREPARED FOR THE STATE OF CALIFORNIA DEPARTMENT OF TRANSPORTATION
Jal Birdy
PROJECT ENGINEER
CU 04251
EA 012051
BRIDGE NO. 34-0006 L/R
KILOMETER POST 12.8
DISREGARD PRINTS BEARING EARLIER REVISION DATES
REVISION DATES (PRELIMINARY STAGE ONLY)
SHEET 4 OF 65
ORIGINAL SCALE IN MILLIMETERS FOR REDUCED PLANS
FILE => K:\4141-06\CADD\TS\Final Const\Adv Const Pkg 1R2\ecfnp02.dgn
Rev. Date: 5-13-98
Nov 29, 2006
DESIGN/TECHNICAL/PROFESSIONAL APPROVAL DATE 11/29/06
DATE PLOTTED => 11/29/2006
TIME PLOTTED => 3:22:13 PM
USERNAME => fsamson

TRANSITION STRUCTURES				
Location	Hazardous (Type H)		Hazardous Class 11 (Petroleum contamination)	
	D1 (m)	D2 (m)	D1 (m)	D2 (m)
WESTBOUND				
Bent W6L			10.0	14.0
Bent W5L			9.0	13.0
Bent W4L	0.0	0.6		
EASTBOUND				
Bent W6R(N)			10.0	14.0
Bent W6R(S)	0.0	0.6	10.0	14.0
Bent W5R	0.0	0.9	9.0	13.0
Bent W4R	0.0	0.6	7.0	11.0

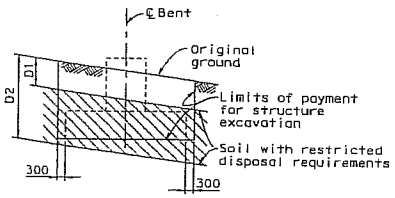

Note:
N - Indicates North footing
S - Indicates South footing

LIMITS OF PAYMENT FOR STRUCTURE EXCAVATION WITH RESTRICTED DISPOSAL

For details not shown see A62C
NO SCALE

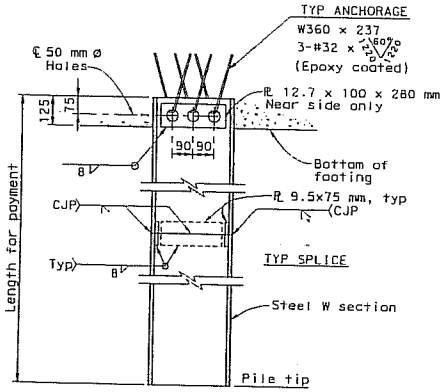

TYPICAL STEEL PILE DETAIL
1:10

TIEDOWN ANCHOR STRESSING NOTES:

T = 525 kN (Design force of anchar)

As = $\frac{1.5 \times T}{0.75\ Fpu}$

Bar = ASTM designation A722

Fpu = Ultimate tensile stress of prestressing steel bar = 1030 MPa

As = Minimum cross-sectional area of prestressing steel bar (mm2)

Lockoff force = 100% T

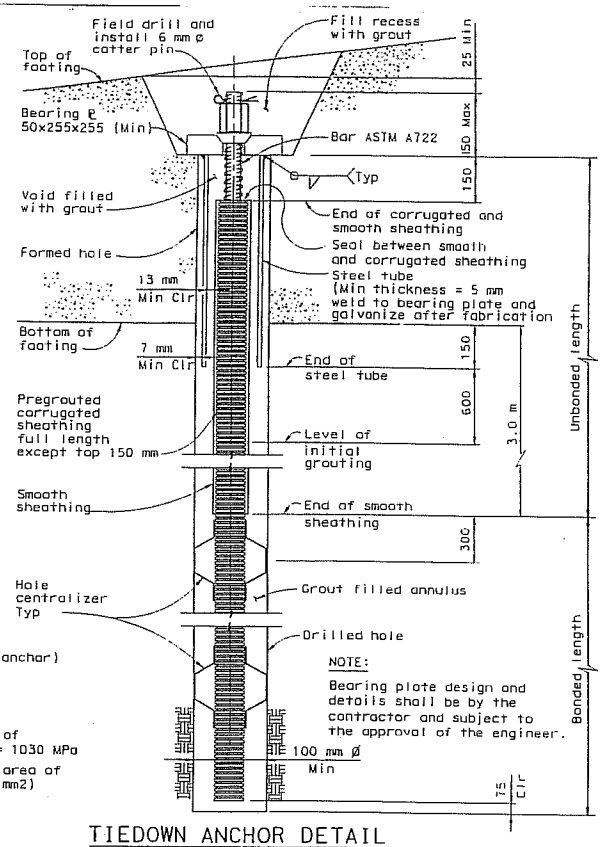

TIEDOWN ANCHOR DETAIL
No scale

NOTES:

1. Concrete for CIDH piles shall have a minimum 28 day compressive strength (F'c) of 25 MPa
2. For hoop splice detail, see "Bent W6L Details No. 1" sheet.
3. ⊠ Indicates bundled bars

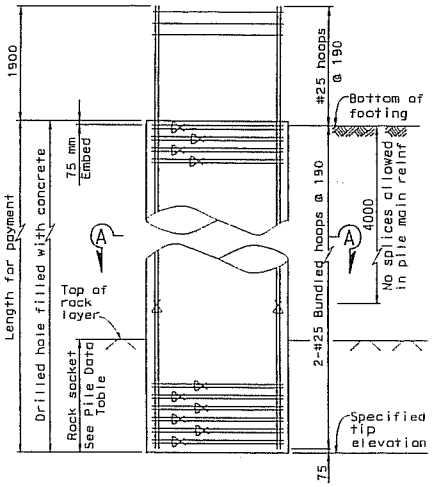

2400mm CIDH PILE DETAIL
1:40

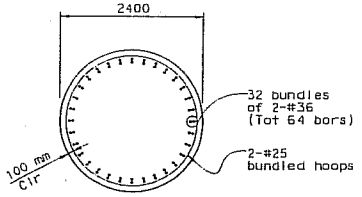

SECTION A-A
1:40

04-0120R4
SUPPLEMENTAL SHEET

CONTRACT CHANGE ORDER NO. 64 -S1
SHEET 8 OF 150

ALL DIMENSIONS ARE IN MILLIMETERS UNLESS OTHERWISE SHOWN

DIST.	COUNTY	ROUTE	KILOMETER POST TOTAL PROJECT	SHEET NO.	TOTAL SHEETS
04	SF	80		61	137

REGISTERED ENGINEER - CIVIL
A.L. ELY No. 18880 Exp. 6-30-07 CIVIL STATE OF CALIFORNIA
PLANS APPROVAL DATE
The State of California or its officers or agents shall not be responsible for the accuracy or completeness of electronic copies of this plan sheet.

T.Y. LIN / MOFFATT & NICHOL
TWO HARRISON STREET
SAN FRANCISCO, CA 94105

RESEARCH OVERSIGHT
HN MOOK, BERNARD CHAN, JUAN F. CARRIO
SIGN OFF DATE
Rev. Dates 5-12-98

DESIGN	BY Desai	CHECKED Jain	
DETAILS	BY Van Ryn/Zucchi/Mai	CHECKED Jain	
QUANTITIES	BY Ligo	CHECKED E. Nichol	

PREPARED FOR THE STATE OF CALIFORNIA DEPARTMENT OF TRANSPORTATION

Jal Birdy
PROJECT ENGINEER

BRIDGE NO.	34-0006 L/R
KILOMETER POST	12.8

CU 04251
EA 0120S1

SAN FRANCISCO OAKLAND BAY BRIDGE
EAST SPAN SEISMIC SAFETY PROJECT

YBI TRANSITION STRUCTURES

ADVANCE CONST PACKAGE NO.1R2

PILE & TIEDOWN ANCHOR DETAILS

DISREGARD PRINTS BEARING EARLIER REVISION DATES

REVISION DATES (PRELIMINARY STAGE ONLY)

SHEET 5 OF 65

ORIGINAL SCALE IN MILLIMETERS FOR REDUCED PLANS 0 10 20 30 40 50 60 70 80 90 100

FILE =j R:\4141-08\CADD\TS\Final Const\Adv Const Pkg 1R2\eepile.dgn

USERNAME =j fmadson DATE PLOTTED =j 11/29/2006 TIME PLOTTED =j 3:22:28 PM

Nov 29, 2006

DIST.	COUNTY	ROUTE	KILOMETER POST TOTAL PROJECT	SHEET NO.	TOTAL SHEETS
04	5F	80		63	137

Caltrans Metric

REGISTERED ENGINEER - CIVIL

PLANS APPROVAL DATE

The State of California or its officers or agents shall not be responsible for the accuracy or completeness of electronic copies of this plan sheet.

REGISTERED PROFESSIONAL ENGINEER A.L. ELY No. 18880 Exp. 6-30-07 CIVIL STATE OF CALIFORNIA

T.Y. LIN / MOFFATT & NICHOL
TWO HARRISON STREET
SAN FRANCISCO, CA 94105

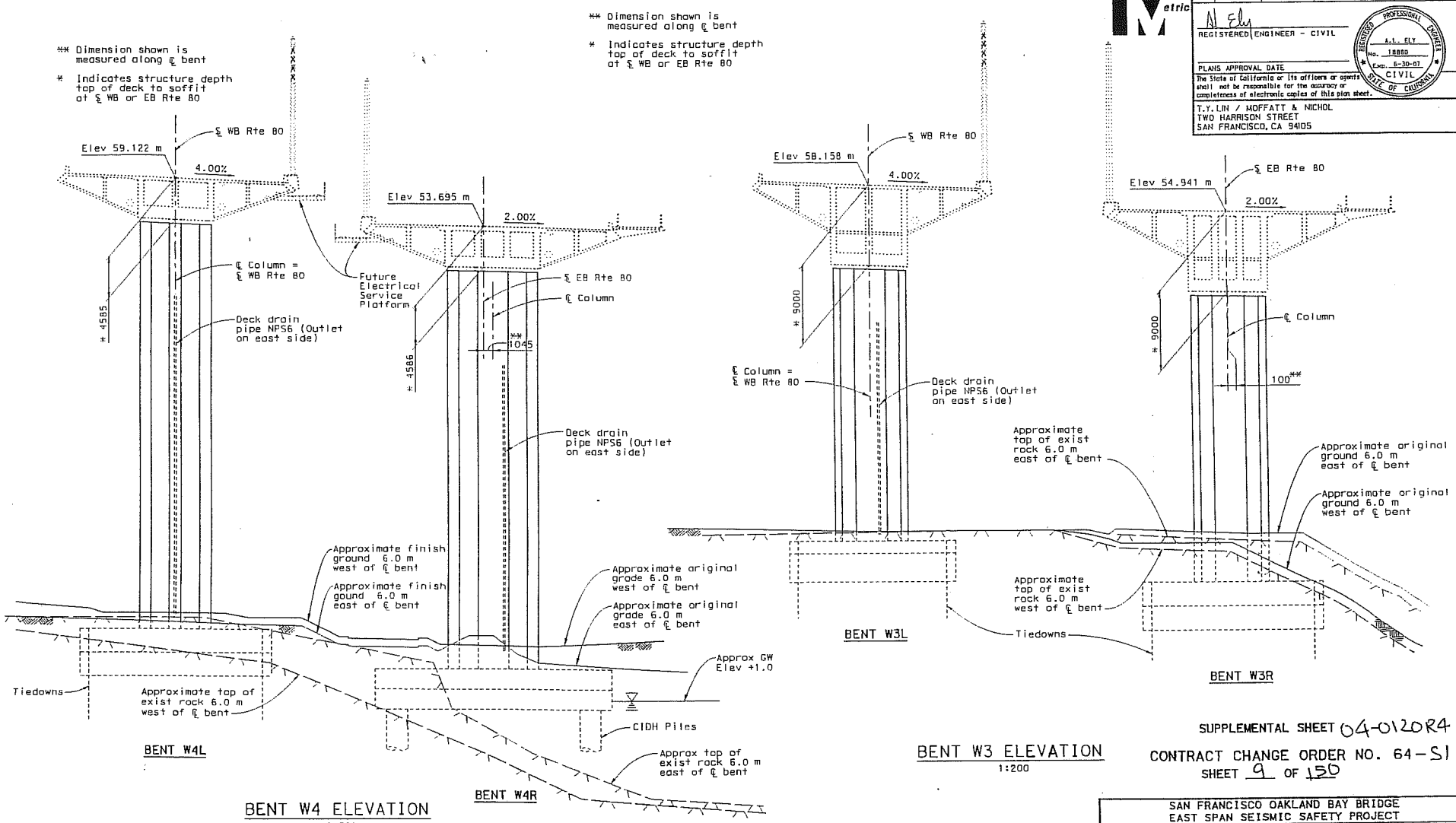

SUPPLEMENTAL SHEET 04-0120R4

CONTRACT CHANGE ORDER NO. 64-S1

SHEET 9 OF 150

ALL DIMENSIONS ARE IN MILLIMETERS UNLESS OTHERWISE SHOWN

SAN FRANCISCO OAKLAND BAY BRIDGE
EAST SPAN SEISMIC SAFETY PROJECT

YBI TRANSITION STRUCTURES

ADVANCE CONST PACKAGE NO.1R2

BENT ELEVATIONS W4 & W3

DESIGN OVERSIGHT
HN MOOK, BERNARD CHAN, JUAN F. CARPIO

SIGN OFF DATE

Rev. Date: 5-16-98

	BY	CHECKED
DESIGN	Desai	Jain
DETAILS	van Ryn/Zucchi/Mai	Jain
QUANTITIES	Liao	E. Nichol

ORIGINAL SCALE IN MILLIMETERS FOR REDUCED PLANS 0 10 20 30 40 50 60 70 80 90 100

PREPARED FOR THE STATE OF CALIFORNIA DEPARTMENT OF TRANSPORTATION

Jal Birdy
PROJECT ENGINEER

BRIDGE NO. 34-0006 L/R
KILOMETER POST 12.8

CU 04251
EA 012051

DISREGARD PRINTS BEARING EARLIER REVISION DATES

REVISION DATES (PRELIMINARY STAGE ONLY)

SHEET 7 OF 65

FILE => k:\4141-06\CADD\TS\Final Const\Adv Const Pkg 1R2\eebnt06elv.dgn

USERNAME => fsamson DATE PLOTTED => 11/29/2006 TIME PLOTTED => 3:23:02 PM

Nov 29, 2006

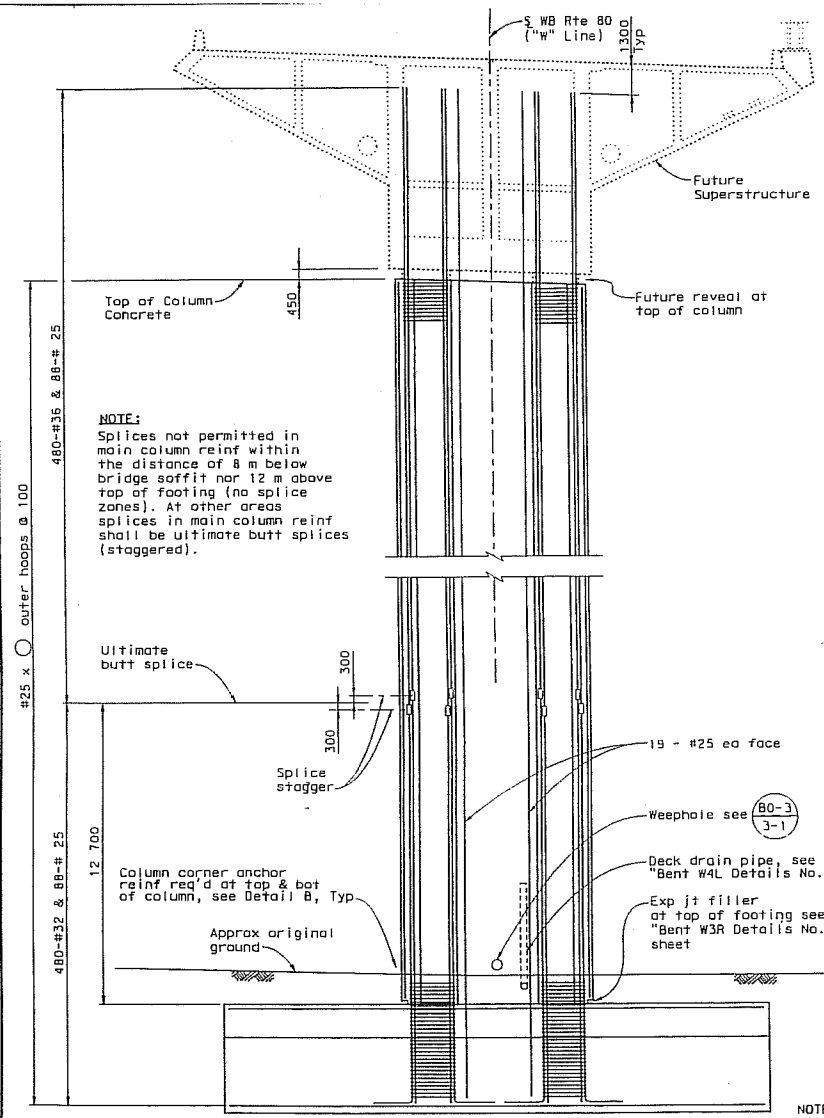

NOTE:
Splices not permitted in main column reinf within the distance of 8 m below bridge soffit nor 12 m above top of footing (no splice zones). At other areas splices in main column reinf shall be ultimate butt splices (staggered).

ELEVATION
1:100

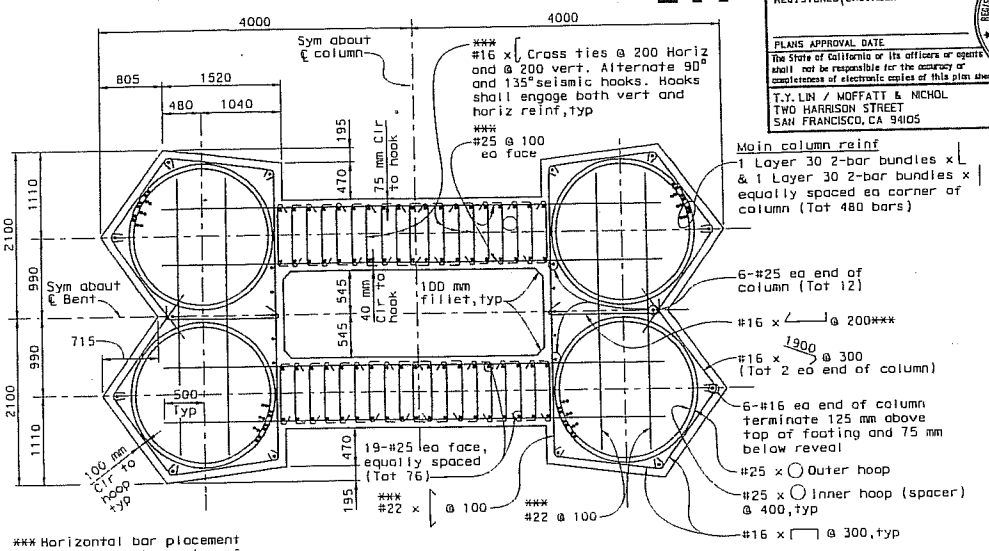

*** Horizontal bar placement to extend between top of footing and bridge soffit.

TYPICAL COLUMN SECTION
1:30

Note:
"Main Column Reinf" bars are #32 bars at footing spliced to #36 bars which extend into bent cap, see elevation.

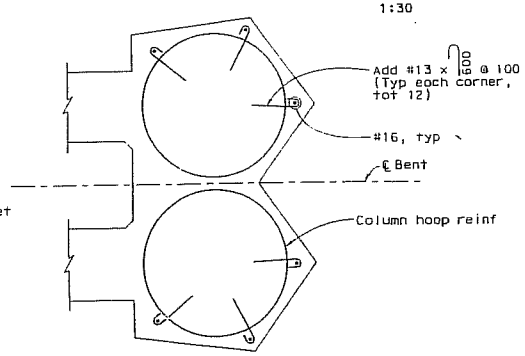

DETAIL B - COLUMN CORNER ANCHOR REINFORCEMENT
(Column corner anchor reinf to be provided in regions within 3000 mm of bridge soffit or top of footing)
No Scale

NOTE:
Tiedowns not shown.

ALL DIMENSIONS ARE IN MILLIMETERS UNLESS OTHERWISE SHOWN

Nov 29, 2006

Caltrans Metric

04	SF	80		70	137

REGISTERED ENGINEER - CIVIL
PLANS APPROVAL DATE
The State of California or its officers or agents shall not be responsible for the accuracy or completeness of electronic copies of this plan sheet.
REGISTERED PROFESSIONAL ENGINEER A.L. ELY No. 18880 Exp. 6-30-07 CIVIL STATE OF CALIFORNIA
T.Y. LIN / MOFFATT & NICHOL
TWO HARRISON STREET
SAN FRANCISCO, CA 94105

SUPPLEMENTAL SHEET 04-0120R4
CONTRACT CHANGE ORDER NO. 64-S1
SHEET 10 OF 150

SAN FRANCISCO OAKLAND BAY BRIDGE
EAST SPAN SEISMIC SAFETY PROJECT
YBI TRANSITION STRUCTURES
ADVANCE CONST PACKAGE NO.1R2
BENT W3L DETAILS NO.1

DESIGN OVERSIGHT
JOHN MOOK, BERNARD CHAN, JUAN F. CARPIO
SIGN OFF DATE
Rev. Date: 5-12-98

	BY	CHECKED
DESIGN	Darrah/Shangkuan	Ahn
DETAILS	van Ryn/Zucchi/Mai	Jain
QUANTITIES	Liao	E. Nichol

ORIGINAL SCALE IN MILLIMETERS FOR REDUCED PLANS 0 10 20 30 40 50 60 70 80 90 100

PREPARED FOR THE STATE OF CALIFORNIA DEPARTMENT OF TRANSPORTATION

Jal Birdy
PROJECT ENGINEER

BRIDGE NO. 34-0006 L/R
KILOMETER POST 12.8

CU 04251
EA 0120S1

DISREGARD PRINTS BEARING EARLIER REVISION DATES
REVISION DATES (PRELIMINARY STAGE ONLY) 11/20/06 11/20/06 11/20/06 10/20/06 10/20/06 10/20/06 10/20/06 10/20/06 10/20/06 11/20/06
SHEET 14 OF 65

FILE => h:\4141-06\CADD\TS\Final Const\Adv Const Pkg 1R2\eebnt28det.dgn

USERNAME => fsamson DATE PLOTTED => 11/29/2006 TIME PLOTTED => 3:24:29 PM

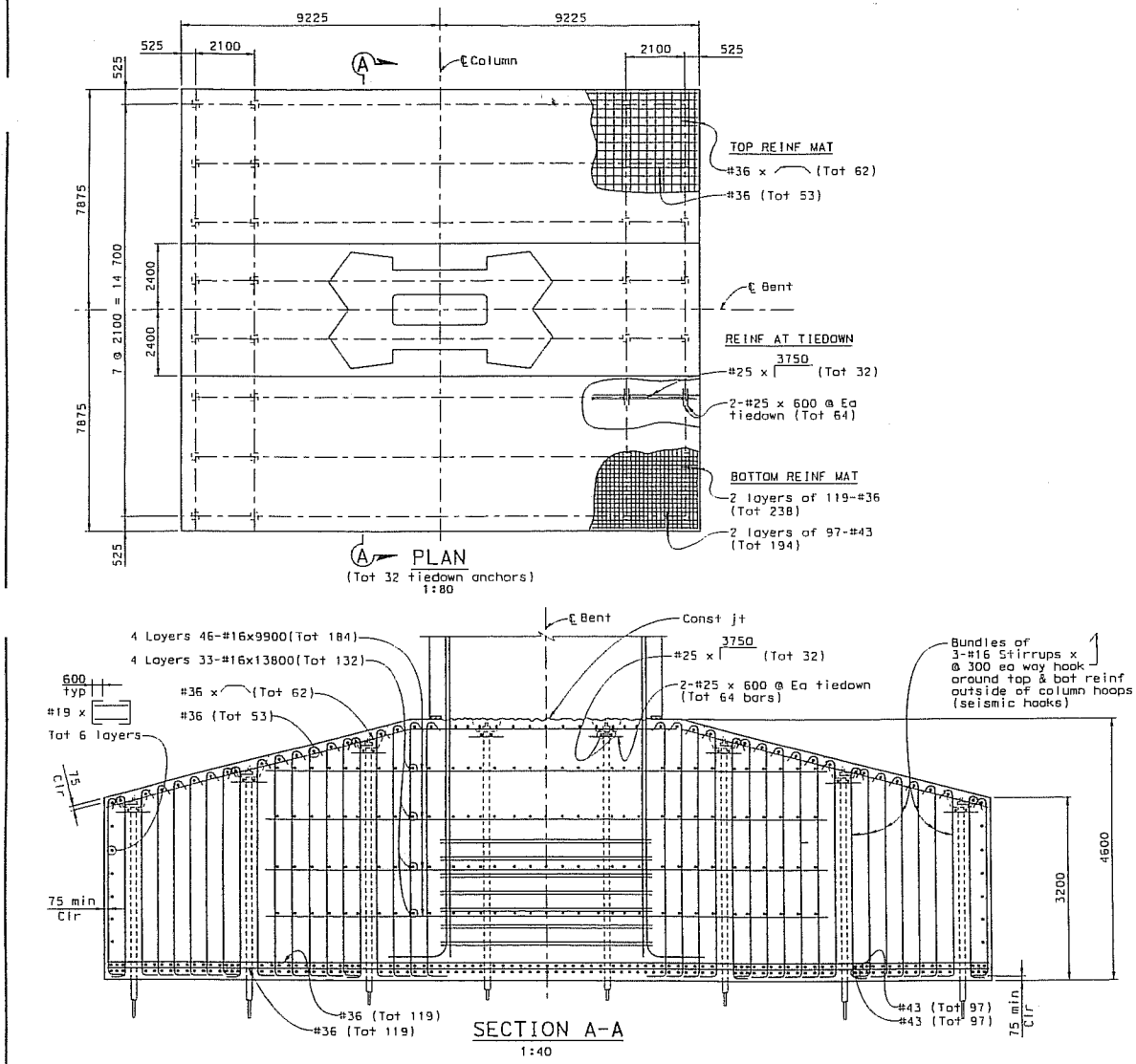

DIST.	COUNTY	ROUTE	KILOMETER POST TOTAL PROJECT	SHEET NO.	TOTAL SHEETS
04	SF	80		71	137

Caltrans Metric

REGISTERED ENGINEER - CIVIL

PLANS APPROVAL DATE

The State of California or its officers or agents shall not be responsible for the accuracy or completeness of electronic copies of this plan sheet.

REGISTERED PROFESSIONAL ENGINEER A.L. ELY No. 18880 Exp. 6-30-07 CIVIL STATE OF CALIFORNIA

T.Y. LIN / MOFFATT & NICHOL
TWO HARRISON STREET
SAN FRANCISCO, CA 94105

SUPPLEMENTAL SHEET 04-0120R4

CONTRACT CHANGE ORDER NO. 64-S1

SHEET 11 OF 150

SAN FRANCISCO OAKLAND BAY BRIDGE
EAST SPAN SEISMIC SAFETY PROJECT

YBI TRANSITION STRUCTURES

ADVANCE CONST PACKAGE NO.1R2

BENT W3L DETAILS NO.2

ALL DIMENSIONS ARE IN MILLIMETERS UNLESS OTHERWISE SHOWN

DESIGN OVERSIGHT
JOHN HOOK, BERNARD CHAN, JUAN F. CARPIO

SIGN OFF DATE

Rev. Date: 5-18-99

DESIGN	BY Dodd	CHECKED Desai
DETAILS	BY van Ryn/Zucchi/Mai	CHECKED Jain
QUANTITIES	BY Liao	CHECKED E. Nichol

ORIGINAL SCALE IN MILLIMETERS FOR REDUCED PLANS 0 10 20 30 40 50 60 70 80 90 100

PREPARED FOR THE STATE OF CALIFORNIA DEPARTMENT OF TRANSPORTATION

Jal Birdy
PROJECT ENGINEER

BRIDGE NO. 34-0006 L/R
KILOMETER POST 12.8

CU 04251
EA 012051

DISREGARD PRINTS BEARING EARLIER-REVISION DATES

REVISION DATES (PRELIMINARY STAGE ONLY) 11/01/06 11/21/06 11/29/06 3/28/02 5/30/02 7/01/02 9/01/02 10/01/02 11/01/02 11/01/02

SHEET 15 OF 65

FILE => k:\4141-06\CADD\TS\Final Const\Adv Const Pkg 1R2\eebnt30det.dgn

USERNAME => fsamson DATE PLOTTED => 11/29/2006 TIME PLOTTED => 3:24:43 PM

Nov 29, 2006

CONTRACT NO. 04-0120R4
(Contract Change Order No. 64)

The special provisions contained herein have been prepared by or under the direction of the following Registered Persons.

STRUCTURES

REGISTERED CIVIL ENGINEER

REGISTERED PROFESSIONAL ENGINEER
Jal N. Birdy
No. 41547
Exp. 12-31-07
CIVIL
STATE OF CALIFORNIA

CONTRACT NO. 04-0120R4

CONTRACT CHANGE ORDER NO. 64-S1

SHEET 12 OF 150

CONTRACT NO. 04-0120R4
(Contract Change Order No. 64)

The special provisions contained herein have been prepared by or under the direction of the following Registered Persons.

HIGHWAYS

Heng K. Tay 11-28-06

REGISTERED CIVIL ENGINEER

REGISTERED PROFESSIONAL ENGINEER
H. K. Tay
No. 41465
Exp. 12-31-07
CIVIL
STATE OF CALIFORNIA

CONTRACT NO. 04-0120R4

CONTRACT CHANGE ORDER NO. 64-61

SHEET 13 OF 150

CONTRACT NO. 04-0120R4
(Contract Change Order No. 64)

The special provisions contained herein have been prepared by or under the direction of the following Registered Persons.

ENVIRONMENTAL ENGINEERING

Charles D. Smith

REGISTERED CIVIL ENGINEER

CONTRACT NO. 04-0120R4

CONTRACT CHANGE ORDER NO. 64-SI

SHEET 14 OF 150

CONTRACT NO. 04-0120R4
(Contract Change Order No. 64)

The special provisions contained herein have been prepared by or under the direction of the following Registered Person.

WATER POLLUTION CONTROL

REGISTERED CIVIL ENGINEER

REGISTERED PROFESSIONAL ENGINEER
Faramarz Farahani
No. C 45671
Exp 12/31/08
CIVIL
STATE OF CALIFORNIA

CONTRACT NO. 04-0120R4

CONTRACT CHANGE ORDER NO. 64-S1

SHEET 15 OF 150

CONTRACT 04-0120R4
(Contract Change Order No. 64)

The special provisions contained herein have been prepared by or under the direction of the following Licensed Person.

EROSION CONTROL

Chris Padick

LICENSED LANDSCAPE ARCHITECT

CONTRACT NO. 04-0120R4

CONTRACT CHANGE ORDER NO. 64-S1

SHEET 16 OF 150

CONTRACT NO. 04-0120R4
(Contract Change Order No. 64)

The special provisions contained herein have been prepared by or under the direction of the following Registered Persons:

ELECTRICAL ENGINEERING

Jens Erlingsson 1/21/08
DATE

REGISTERED PROFESSIONAL ENGINEER
JENS ERLINGSSON
NO. 8249
EXP. 9/30/08
ELECTRICAL
STATE OF CALIFORNIA

CONTRACT NO. 04-0120R4

CONTRACT CHANGE ORDER NO. 64-S1

SHEET 17 OF 150

TABLE OF CONTENTS

SCOPE OF WORK (CCO No. 64) 21
ENGINEER'S ESTIMATE 22
5-1.01 WORKING DRAWINGS 25
5-1.02 INTEGRATED SHOP DRAWINGS 26
5-1.03 PAYMENTS 27
5-1.04 PROJECT INFORMATION 28
5-1.05 AREAS FOR CONTRACTOR'S USE 28
5-1.06 UTILITIES 29
5-1.07 SANITARY PROVISIONS 29
5-1.08 BRIDGE TOLLS 30
5-1.09 PERMITS AND LICENSES 30
5-1.10 HAZARDOUS MATERIAL, GENERAL 30
APPLICABLE RULES AND REGULATIONS 31
PERMITS AND LICENSES 31
SITE HEALTH AND SAFETY PLAN 32
SAFETY TRAINING 32
PAYMENT 32
5-1.11 ENVIRONMENTALLY SENSITIVE AREAS (GENERAL) 32
A. ENVIRONMENTALLY SENSITIVE AREAS 32
B. AREA TO BE MONITOR (ATM) 35
C. SPECIAL CONSTRUCTION AREA (SCA) 35
5-1.12 SOUND CONTROL REQUIREMENTS 36
8-1.01 SUBSTITUTION OF NON-METRIC MATERIALS AND PRODUCTS 36
8-2.02 PORTLAND CEMENT CONCRETE 43
8-2.03 CORROSION CONTROL FOR PORTLAND CEMENT CONCRETE 45
SECTION 8-3. WELDING 47
8-3.01 WELDING 47
GENERAL 47
WELDING QUALITY CONTROL 50
PAYMENT 53
SECTION 9. DESCRIPTION OF BRIDGE WORK 53
SECTION 10. CONSTRUCTION DETAILS 54
SECTION 10-1. GENERAL 54
10-1.01 ORDER OF WORK 54
10-1.02 WATER POLLUTION CONTROL 54
COST BREAK-DOWN 55
PAYMENT 57
10-1.03 NON-STORM WATER DISCHARGES 59
MARINE EXCAVATION DEWATERING 59
LAND-BASED EXCAVATION DEWATERING 60
EFFLUENT TREATMENT FACILITY 64
INSPECTION 65
SPILL CONTINGENCY 66

LIQUIDS, RESIDUES AND DEBRIS 66
PAYMENT 66
10-1.04 TEMPORARY DRAINAGE INLET PROTECTION 66
10-1.05 TEMPORARY COVER 73
10-1.06 TEMPORARY CONCRETE WASHOUT FACILITY 76
10-1.07 TEMPORARY SILT FENCE 79
10-1.08 TEMPORARY CONSTRUCTION ENTRANCE 81
10-1.09 EROSION CONTROL (NETTING) 83
MATERIALS 84
INSTALLATION 84
MAINTENANCE 84
MEASUREMENT AND PAYMENT 85
10-1.10 OBSTRUCTIONS 85
10-1.11 DUST CONTROL 87
10-1.12 CONSTRUCTION AREA SIGNS 87
10-1.13 MAINTAINING TRAFFIC 88
10-1.14 TRAFFIC CONTROL SYSTEM FOR LANE CLOSURE 89
10-1.15 EXISTING HIGHWAY FACILITIES 90
ABANDON PIPE LINE 90
REMOVE FIRE HYDRANT 90
RELOCATE FIRE HYDRANT 91
REMOVE ABADON UTILITY AND NON-HIGHWAY FACILITIES 91
REMOVE TRAFFIC STRIPE ANDPAVEMENT MARKER 91
REMOVE DRAINAGE FACILITY 91
REPLACE EXISTING PAVEMENT DELINEATION 92
10-1.16 SEWER VIDEO SURVEY 92
SEWER VIDEO SURVEY LOCATIONS 92
SAFETY PROCEDURES 93
PRE-ENTRY AND CONFINED SPACE OPERATIONS 93
ADDITIONAL REQUIREMENTS 93
PAYMENT 94
10-1.17 CLEARING AND GRUBBING 94
10-1.18 EARTHWORK 95
HAZARDOUS MATERIAL EXCAVATION 96
SAMPLING AND ANALYSIS 97
10-1.19 STRUCTURE EXCAVATION (ROCK) 98
10-1.20 MOVE-IN/MOVE-OUT (EROSION CONTROL) 99
10-1.21 EROSION CONTROL (TYPE D) 100
MATERIALS 100
APPLICATION 102
MEASUREMENT AND PAYMENT 103
10-1.22 AGGREGATE BASE 103
10-1.23 ASPHALT CONCRETE 104
10-1.24 PILING 106
GENERAL 106
CAST-IN-DRILLED-HOLE CONCRETE PILES 107

MEASUREMENT AND PAYMENT (PILING) 120
10-1.25 TIEDOWN ANCHORS 120
MATERIALS 121
CONSTRUCTION 121
MEASUREMENT AND PAYMENT 124
10-1.25 CONCRETE STRUCTURES 124
MASS CONCRETE 125
MEASUREMENT AND PAYMENT 130
10-1.26 REINFORCEMENT 130
MEASUREMENT AND PAYMENT 130
10-1.27 ROADSIDE SIGNS 130
10-1.28 FURNISH SIGN 130
QUALITY CONTROL FOR SIGNS 131
SHEET ALUMINUM 133
RETROREFLECTIVE SHEETING 133
PROCESS COLOR AND FILM 133
10-1.29 ALTERNATIVE PIPE 134
10-1.30 PLASTIC PIPE 134
10-1.31 REINFORCED CONCRETE PIPE 134
10-1.32 CORRUGATED METAL PIPE 135
10-1.33 WELDED STEEL PIPE 135
10-1.34 BRIDGE DECK DRAINAGE SYSTEM 135
10-1.35 COMPRESSED AIR PIPE 136
10-1.36 WATER MAINS 136
MEASUREMENT AND PAYMENT 144
10-1.37 THERMOPLASTIC DELINEATION (ESA) 145
MEEASUREMENT AND PAYMENT 145
SECTION 10-3. ELECTRICAL SYSTEMS 145
10-3.01 DESCRIPTION 145
10-3.02 ABBREVIATIONS 146
10-3.03 COST BREAK-DOWN 147
10-3.04 NUMBERING ELECTRICAL EQUIPMENT 147
10-3.05 RIGID GALVANIZED STEEL CONDUIT, THREADED COUPLINGS AND ELBOWS 147
10-3.06 UNDERGROUND RACEWAYS 147
DUCTBANKS 147
MANHOLES 148
MANHOLE FRAMES AND COVERS 148
10-3.07 BONDING AND GROUNDING 148
10-3.08 PAYMENT 149

SCOPE OF WORK (CCO No. 64)

Scope of the work for Contract Change Order No. 64 for the construction consists of the following facilities:

1. Bridge No. 34-0006L/R: Only Bents W3, W4, W5, W6 of the westbound and eastbound Yerba Buena Island Transition Structures, and Bent 7 of the eastbound on-ramp as shown on the plans
2. Electrical Duct Bank at locations a shown on the plans.
3. Miscellaneous roadway work, including utilities as shown on the plans

ENGINEER'S ESTIMATE

Item	Item Code	Item	Unit of Measure	Estimated Quantity
1	074019A	PREPARE AMENDMENT TO STORM WATER POLLUTION PREVENTION PLAN	LS	LUMP SUM
2	074020	WATER POLLUTION CONTROL	LS	LUMP SUM
3 (S)	074029	TEMPORARY SILT FENCE	M	1000
4 (S)	074032	TEMPORARY CONCRETE WASHOUT FACILITY	EA	2
5 (S)	074033	TEMPORARY CONSTRUCTION ENTRANCE	EA	1
6 (S)	074034	TEMPORARY COVER	M2	2000
7 (S)	031078	TEMPORARY DRAINAGE INLET PROTECTION	EA	12
8	129000	TEMPORARY RAILING (TYPE K)	M	90
9	129100	TEMPORARY CRASH CUSHION MODULE	EA	22
10 (S)	120090	CONSTRUCTION AREA SIGNS	LS	LUMP SUM
11 (S)	120100	TRAFFIC CONTROL SYSTEM	LS	LUMP SUM
12 (S)	120165	CHANNELIZER (SURFACE MOUNTED)	EA	10
13 (S)	120300	TEMPORARY PAVEMENT MARKER	EA	50
14	150241	ABANDON SEWER	EA	2
15	150242A	SEWER VIDEO SURVEY	LS	LUMP SUM
16	152427A	RELOCATE FIRE HYDRANT	EA	2
17	152428A	REMOVE FIRE HYDRANT	EA	1
18	152444A	ABANDON WATER MAIN	EA	7
19	150805	REMOVE CULVERT	M	225
20	150820	REMOVE INLET	EA	5
21	160101	CLEARING AND GRUBBING	LS	LUMP SUM
22	190101	ROADWAY EXCAVATION	M3	135
23	192000A	STRUCTURE EXCAVATION (DUCT BANK)	M3	5250
24	192010A	STRUCTURE EXCAVATION (TYPE H) (DUCT BANK)	M3	750
25 (F)B	192003	STRUCTURE EXCAVATION (BRIDGE)	M3	9400
26 (F)B	192020	STRUCTURE EXCAVATION (TYPE D)	M3	540
27 (S-F)B	192023	STRUCTURE EXCAVATION (TYPE H)	M3	1040

Item	Item Code	Item	Unit of Measure	Estimated Quantity
28 (S-F)B	192024A	STRUCTURE EXCAVATION (CLASS II)	M3	50
29 (F)B	192035	STRUCTURE EXCAVATION (ROCK)	M3	7040
30 (F)B	193003	STRUCTURE BACKFILL (BRIDGE)	M3	7840
31 (S)	031083	EROSION CONTROL (NETTING)	M2	1000
32 (S)	203003	STRAW (EROSION CONTROL)	TONN	3.2
33 (S)	203014	FIBER (EROSION CONTROL)	KG	450
34 (S)	203021	FIBER ROLLS	M	250
35 (S)	203024	COMPOST (EROSION CONTROL)	M3	2.8
36 (S)	203026	MOVE -IN/MOVE-OUT (EROSION CONTROL)	EA	2
37 (S)	203045	PURE LIVE SEED (EROSION CONTROL)	KG	47
38 (S)	203061	STABILIZING EMULSION (EROSION CONTROL)	KG	98
39	260301	CLASS 3 AGGREGATE BASE	M3	62
40	390102	ASPHALT CONCRETE (TYPE A)	TONN	72
41 B	490566	FURNISH STEEL PILING (HP 360 X 132)	M	1103
42 (S)B	490567	DRIVE STEEL PILE (HP 360 X 132)	EA	91
43 B	490570A	FURNISH STEEL PILING (W 360 X 237)	M	10685
44 (S)B	490571A	DRIVE STEEL PILE (W 360 X 237)	EA	592
45 (S)B	490671	2.4 M CAST-IN-DRILLED-HOLE CONCRETE PILING	M	109
46 (S)B	490671A	2.4 M CAST-IN-DRILLED-HOLE CONCRETE PILING (ROCK SOCKET)	M	68
47 (S)B	500060	TIEDOWN ANCHOR	EA	104
48 (F)	510502	MINOR CONCRETE (MINOR STRUCTURE)	M3	34.5
49 (F)B	510051	STRUCTURAL CONCRETE, BRIDGE FOOTING	M3	9890
50 (F)B	510053	STRUCTURAL CONCRETE, BRIDGE	M3	7670
51 (S-F)B	520102	BAR REINFORCING STEEL (BRIDGE)	KG	3300400
52	620904	300 MM ALTERNATIVE PIPE CULVERT	M	54
53	620909	450 MM ALTERNATIVE PIPE CULVERT	M	95
54	620913	600 MM ALTERNATIVE PIPE CULVERT	M	31
55	703522	150 MM WELDED STEEL PIPE (3.40 MM THICK)	M	53

Item	Item Code	Item	Unit of Measure	Estimated Quantity
56	718036	150 MM CAST IRON SEWER PIPE	M	50
57	718044A	150 MM COMPRESSED AIR PIPE	M	330
58 (S)	718045A	200 MM WATER DUCTILE IRON PIPE	M	400
59 (S-F)	750001	MISCELLANEOUS IRON AND STEEL	KG	1600
60 (S-F)B	750505	BRIDGE DECK DRAINAGE SYSTEM	KG	830
61	840563A	200 MM THERMOPLASTIC TRAFFIC STRIPE (ESA)	M	260
62 (S)	860556A	UNDERGROUND RACEWAYS ELECTRICAL SYSTEM	LS	LUMP SUM

5-1.01 WORKING DRAWINGS

Working drawings shall conform to the requirements in Section 5-1.02, "Plans and Working Drawings," of the Standard Specifications and these special provisions. Working drawings shall include supplements and calculations that are in addition to drawings.

Working drawings shall be submitted to the following location:

California Department of Transportation
Office of the Resident Engineer, Contract 04-0120R4
280 Beale Street
San Francisco, CA 94105

Working drawings shall conform to the following:

A. For initial review, 6 sets of the working drawings, shall be submitted. After the Engineer has determined that a submittal is complete, 12 additional sets shall be submitted.
B. Drawings shall be 559 mm x 864 mm or 279 mm x 432 mm in size. Supplements and calculations shall be 216 mm x 280 mm n size.
C. For drawings, text size shall be nominally 2.8 mm high, minimum. For supplement and calculations, font size shall be 12, minimum.
D. Each working drawing sheet and each page of supplement or calculation, shall include the jobsite name of the structure as shown on the contract plans, District-County-Route-Kilometer Post, bridge number and contract number.
E. Text and details shall be legible and suitable for photocopying and reduction.
F. In addition to the paper copies of the working drawings, electronic files shall be submitted. Electronic files shall be portable document format (PDF) and shall be submitted on compact disk (CD) media. Each plan sheet shall be a separate PDF file on the CD. The electronic copy of the calculations and supplement shall be made into separate PDF files so that no more than 50 pages are included in a single file on the CD. The CD shall contain an index consisting of the file names and a description of the corresponding file contents. The files shall be listed in the sequence of: 1) index, 2) drawings, 3) supplement, and 4) calculations. If more than one CD is used for a given working drawing submittal, the index shall be included on each CD.
G. Microfilms are required for approved shop drawings and shall be only a 24x reduction. The edge of the corrected original tracing image shall be clearly visible and visually parallel with the edges of the page. A clear, legible symbol shall be provided on the upper left side of each page to show the amount of reduction, and a horizontal and vertical scale shall be provided on each reduced print to facilitate enlargement to original scale.
H. At the completion of the contract, one compiled set of all approved working drawings (in electronic form and including all corrections and revisions) shall be furnished to the Engineer. The index shall be the first file on the CD.
I. At the completion of the contract, one set of reduced prints on 75-g/m2 (minimum) bond paper, 279 mm x 432 mm in size, of the corrected original tracings of all approved working drawings, including all corrections and revisions shall be furnished to the Engineer. Reduced prints that are common to more than one structure shall be submitted for each structure. An

index prepared specifically for the drawings for each structure containing sheet numbers and titles shall be included on the first reduced print in the set for each structure. Reduced prints for each structure shall be arranged in the order of drawing numbers shown in the index.

Working drawings shall be stamped and signed by an engineer who is registered as a Civil Engineer in the State of California. When independently checked calculations are required, these calculations shall be stamped and signed by another engineer who is registered as a Civil Engineer in the State of California.

Working drawings shall be submitted sufficiently in advance of the start of the affected work to allow time for review by the Engineer and correction by the Contractor of the drawings without delaying the work. The time shall be proportional to the complexity of the work, but in no case shall the time be less than the review time as specified for the type of working drawings as required elsewhere in these special provisions.

The Engineer will review a working drawing submittal for completeness. Within ten working days of the receipt of the submittal by the Engineer, the Engineer will notify the Contractor in writing if the submittal is determined to be incomplete. If the submittal is determined to be complete, thirty working days from the day of receipt shall be allowed for approval or return for correction of each submittal or resubmittal, unless specified otherwise in the special provisions.

Should the Engineer fail to review the complete working drawing submittal within the time specified, and the Contractor's controlling operation on the critical path is delayed (as determined by the Engineer) by the Engineer's failure to review within the time specified, an extension of time will be granted in conformance with the provisions in Section 8-1.07, "Liquidated Damages," of the Standard Specifications and in "Progress Schedule (Critical Path Method)," of these special provisions. Should the Engineer fail to review the complete working drawing submittal within the time specified, compensation, if any, will be made in accordance with Section 8-1.09, "Right of Way Delays," of the Standard Specifications, and "Time Related Overhead," of these special provisions.

5-1.02 INTEGRATED SHOP DRAWINGS

Difficult reinforcement placement is anticipated at the:

A. Reinforcement at column penetrations for drain pipes and electrical conduits
B. Reinforcement at column/footing intersections.

These locations are especially highly congested with reinforcing steel, high strength rods, post-tensioning strand tendons, anchor bolts, and other concrete embedded items as shown on the plans. It is anticipated that various dimensional conflicts may be encountered between the planned locations of these embedded items.

The Contractor shall develop three-dimensional integrated shop drawings (ISD's) for all locations listed above in accordance with the details shown on the plans and the requirements of this section. ISD's shall conform to Section "Working Drawings," of these special provisions. ISD's shall be prepared under the supervision of an engineer who is registered as a Civil Engineer in the State of California. ISD's shall be composite placing drawings to scale and in sufficient detail to show the relative positions of all items that are to be embedded in the concrete and their embedment depth as necessary to demonstrate compatibility of items within the concrete.

Prior to commencing work on the ISD, the Contractor (including any sub-consultants hired to work on the ISD) shall attend a meeting with the Engineer to discuss the ISD work.

Embedded items that are to be shown on the ISD's shall include but are not limited to, the following:

A. Bar reinforcing steel and splices including lap, welded, and mechanical splices
B. Drainage pipe
C. Other items, as shown on the plans or added by the Contractor

The three-dimensional ISD's shall be adequate to ensure that there will be no conflict between the planned positions of any embedded items and that concrete cover will be adequate.

If conflicts are discovered during the preparation of ISD's, the Contractor shall revise the working drawings for one or more of the embedded items to eliminate the conflict or provide proper cover or spacing. If a conflict requires that bar reinforcement locations be adjusted, the Contractor shall proceed with performing reinforcing steel adjustments in the ISD's prior to submitting the changes to the Engineer.

The ISD's to be submitted to the Engineer shall include the following:

A. ISD submittal shall be in two-dimensional format utilizing the three-dimensional layouts as input.
B. Three sets of the ISD's corresponding to the details as shown on the plans with incorporation of any Contractor's adjustments in the locations of embedded items. These ISD's shall resolve all conflicts and satisfy concrete cover requirements as shown on the plans. The initial ISD submittal for a particular area shall clearly identify all adjustments to the locations of embedded items made as part of the Contractor's conflict resolution process.
C. Three copies of the ISD's in electronic form on compact discs or tape for use by the Engineer.

CAD files of the contract drawings will not be made available to the Contractor.

After completed ISD's are received by the Engineer, the Contractor shall allow the Engineer 8 weeks for review and approval. For each revised ISD's submitted by the Contractor, the Contractor shall allow the Engineer an additional 2 weeks for review and approval. Construction of the items listed above shall not begin until the Engineer reviews and approves the complete ISD's with all conflicts resolved.

No extension of time will be permitted for the Contractor's failure to identify all conflicts or to complete the ISD's as required by these special provisions.

Full compensation for preparing ISD's, including all revisions necessary due to conflict resolution measures taken by the Contractor, shall be considered as included in the contract lump sum price paid for this contract change order 64 work involved, including all supplements, and no additional compensation will be allowed therefor.

5-1.03 PAYMENTS

Attention is directed to Sections 9-1.06, "Partial Payments," and 9-1.07, "Payment After Acceptance," of the Standard Specifications and these special provisions.

In determining the partial payments to be made to the Contractor, only the following listed materials will be considered for inclusion in the payment as materials furnished but not incorporated in the work:

A. Steel Piling
B. Tiedown anchor
C. Bar reinforcing steel
D. Bridge deck drainage system

5-1.04 PROJECT INFORMATION

The information in this section has been compiled specifically for this project and is made available for bidders and Contractors. Other information referenced in the Standard Specifications and these special provisions do not appear in this section. The information is subject to the conditions and limitations set forth in Section 2-1.03, "Examination of Plans, Specifications, Contract, and Site of Work," and Section 6-2, "Local Materials," of the Standard Specifications. Bidders and Contractors shall be responsible for knowing the procedures for obtaining information.

Information attached to the project plans is as follows:

A. Log of Test Borings

Information available for inspection at the District Office is as follows:

Cross sections are available in paper copy.

Bidders and Contractors may contact the Transportation Laboratory to request viewing rock cores via electronic mail at the following address:

Coreroom@dot.ca.gov

Request shall be submitted at least 5 working days before the intended date for viewing, and shall include the District-County-Route, bridge number, contract number, viewing date, and contact information including telephone number.

Plans of the existing bridges may be requested by fax from the Office of Structure Maintenance and Investigations, 1801 30th Street, Sacramento, CA, Fax (916) 227-8357.

Plans of the existing bridges may be requested by fax from the Office of Structure Maintenance and Investigations, 1801 30th Street, Sacramento, CA, Fax (916) 227-8357, and are available at the Office of Structure Maintenance and Investigations, Los Angeles, CA, Telephone (213) 897-0877.

5-1.05 AREAS FOR CONTRACTOR'S USE

Attention is directed to the requirements specified in Section 7-1.19, "Rights in Land and Improvements," of the Standard Specifications, plans and these special provisions.

The highway right of way shall be used only for purposes that are necessary to perform the required work. The Contractor shall not occupy the right of way, or allow others to occupy the right of way, for purposes which are not necessary to perform the required work.

The Contractor's attention is directed to "Cooperation," of these special provisions, and the Contractor shall use only the designated areas for Contractor's use as specified in this section, and as shown on the plans and as follows:

1. **Area PR:** it is available for the contractor's use for the entire contract period except as limited by other areas as defined on the contract plans and these special provisions. The Contractor shall permit access by other contractors as directed by the Engineer.

2. **Area FPR:** it. is primarily available to Contract 04-0120R4 until May 1, 2007. Prior to May 1, 2007, the Contractor shall coordinate any planned work in area FPR with the Engineer and Contract 04-0120R4 contractor. After May 1, 2007, area FPR shall be considered a part of area FP.
3. **Area FP:** it is available for use by the 04-0120F4 contract until November 30, 2007. The area FP shall then be made available to the contractor constructing the YBI transition structures under contract 04-0120S4 until May 1, 2009.
4. **Area EF:** is primarily available to Contract 04-0120E4 until March 31, 2008, and then to this contract after that date. Prior to March 31, 2008, the Contractor shall coordinate any planned work in area EF with the Engineer and Contract 04-0120E4 contractor. Additionally, footings at tower T1 and footing and piers at Pier E2 to be constructed by others under Contract 04-0120E4 will be substantially complete by March 31, 2008, to allow the Contractor to complete the tower and E2 work specified under the contract.
5. **Area CE:** is designated for use by Contract 04-0120E4 until March 31, 2008. The Contractor shall have access through area CE to the work area at Pier W2. After March 31, 2008, the area CE becomes a part of the area provided to the Yerba Buena Island Structures contractor on contract 04-0120S4. The Contractor shall continue to have access through the area to the work area at Pier W2.

The Contractor shall maintain access to the Torpedo Factory area at the east end of Yerba Buena Island at all times during the contract. Access may be via the existing Torpedo Factory Road or other routing as approved by the Engineer.

No area is available within the contract limits for the exclusive use of the Contractor. However, temporary storage of equipment and materials on State property may be arranged with the Engineer, subject to the prior demands of State maintenance forces and to other contract requirements. Use of the Contractor's work areas and other State-owned property shall be at the Contractor's own risk. The State shall not be held liable for damage to or loss of materials or equipment located within these areas.

Toll plaza parking lots shall not be used for the Contractor's employees private vehicles and the Contractor's equipment and vehicles.

The Contractor shall remove the equipment, materials, and rubbish from the work areas and other State-owned property which the Contractor occupies and shall leave the areas in a presentable condition, in conformance with the provisions in Section 4-1.02, "Final Cleaning Up," of the Standard Specifications.

The Contractor shall secure, at the Contractor's own expense, areas required for storage of plant, equipment, and materials, or for other purposes if sufficient area is not available to the Contractor within the contract limits.

5-1.06 UTILITIES

The Contractor shall make arrangements to obtain electrical power, water or compressed air or other utilities required for the Contractor's operations and shall make and maintain the necessary service connections at the Contractor's own expense.

5-1.07 SANITARY PROVISIONS

State sanitary facilities will not be available for use by the Contractor's employees.

5-1.08 BRIDGE TOLLS

Toll-free passage on the San Francisco-Oakland Bay Bridge will be granted only for cars, trucks and special construction equipment which are clearly marked on the exterior with the Contractor's identification and which are being operated by the Contractor exclusively for the project, and which are used for the purpose of transporting materials and workers directly to and from the project site.

The Contractor shall make application to the Engineer in advance for toll-free passage. The Contractor will be held accountable for the proper use of passes issued, and upon completion of the work, shall return unused passes to the Engineer.

Attention is directed to Section 23302, "Evasion of Toll," of the Vehicle Code.

5-1.09 PERMITS AND LICENSES

Attention is directed to Section 7-1.04, "Permits and Licenses," of the Standard Specifications and these special provisions.

The Department has obtained the permits and licenses from the following agencies for this project:

A. California Regional Water Quality Control Board (RWQCB)
B. U.S. Army Corps of Engineers (ACOE)
C. San Francisco Bay Conservation Development Commission (BCDC)
D. United States Coast Guard (USCG)
E. California Department of Fish and Game (CDFG)

These permits has been made available to the Contractor as part of the information handout for the 04-0120R4 Contract.

For updated versions of environmental permits, the Contractor shall visit the website:

www.biomitigation.org

Full compensation for conforming to the requirements in these permits and licenses shall be considered as included in the contract lump sum price paid for this contract change order 64 work involved, including all supplements, and no additional compensation will be allowed therefor.

5-1.10 HAZARDOUS MATERIAL, GENERAL

Attention is directed to "Earthwork" of these special provisions regarding the removal and disposal of hazardous material described in this section.

Contaminants have been discovered through testing within the project limits. Testing consisted of collecting and analyzing in situ samples from within the project limits. Summary tables of the test results are included in the "Materials Information." The complete report entitled "Site Investigation Report, SFOBB East Span Seismic Safety Project, Yerba Buena Island" is available for inspection at the office of the Duty Senior, 111 Grand Avenue, Oakland, CA 94612, email: , telephone (510) 286-5209, and fax number: (510) 622-1805. These test results have been used for disposal characterization of material within the excavation limits and shall not be construed as identifying all locations within the project limits that contain contaminants.

Wherever the following terms are used in the contract documents, the meaning and intent shall be interpreted as provided below:

A. Hazardous material – Material that contains contaminants at concentrations equal to or greater than the threshold limit concentrations listed in Section 66261.24 of Title 22 of the California Code of Regulations.
B. Class II material – Material that contains contaminants, typically petroleum hydrocarbons, at concentrations that require handling of the material as a Designated Waste as defined in Section 13173 of the California Water Code but does not contain contaminants at concentrations equal to or greater than the threshold limit concentrations listed in Section 66261.24 of Title 22 of the California Code of Regulations. This material is unsuitable for reuse within the project limits.

Characterization and disposal of additional material resulting from excavations performed outside of the pay limits shown on the plans, specified in the Standard Specifications, or specified or directed by the Engineer, for the Contractor's convenience, shall be at the Contractor's expense. This resultant material shall be presumed to be either non-hazardous material or hazardous material if the test results for the location indicate that the material being excavated is non-hazardous material or hazardous material. The Contractor shall dispose of the resultant material in conformance with the provisions in "Earthwork" of these special provisions. When the material must be removed from highway right of way, the Contractor shall furnish replacement material suitable for the purpose intended in conformance with the provisions in Section 19, "Earthwork," of the Standard Specifications.

APPLICABLE RULES AND REGULATIONS

Excavation, transport and disposal of hazardous material shall be in conformance with the rules and regulations of the following agencies:

United States Department of Transportation (USDOT)
United States Environmental Protection Agency (USEPA)
California Environmental Protection Agency (CAL-EPA)
1. Department of Toxic Substance Control (DTSC)
2. Integrated Waste Management Board
3. Regional Water Quality Control Board, Region 2 (RWQCB)
4. State Air Resources Board

Bay Area Air Quality Management District (BAAQMD)
California Division of Occupational Safety and Health Administration (CAL-OSHA)

PERMITS AND LICENSES

The Contractor shall procure all permits and licenses, pay all charges and fees, and give all notices necessary and incident to the due and lawful prosecution of the work, including registration for transporting vehicles carrying hazardous material, in conformance with the provisions in Section 7-1.04, "Permits and Licenses," of the Standard Specifications.

The Engineer will obtain the Environmental Protection Agency Generator Identification Number and Board of Equalization Identification Number and sign all manifests as the Generator.

SITE HEALTH AND SAFETY PLAN

The Contractor shall prepare a detailed Site Health and Safety Plan for all site personnel, including State personnel, that identifies potential health and safety hazards associated with each operation and specifies work practices that will be used to protect workers from those hazards in conformance with the DTSC and CAL-OSHA regulations. At a minimum, the Site Health and Safety Plan shall identify key site safety personnel, describe risks associated with the work, describe training requirements, describe appropriate personal protective equipment, describe any site-specific medical surveillance requirements, describe any periodic air monitoring requirements, define appropriate site work zones, and describe any decontamination requirements. The Site Health and Safety Plan shall be submitted at least 15 working days prior to beginning any excavation work for review and acceptance by the Engineer. Prior to submittal, the Contractor shall have the Site Health and Safety Plan approved by an Industrial Hygienist certified by the American Board of Industrial Hygiene. Subcontractors shall use the Site Health and Safety Plan prepared by the Contractor or prepare and submit a separate Site Health and Safety Plan in conformance with the provisions in this section.

SAFETY TRAINING

Prior to performing any work, all personnel, including State personnel, shall complete a safety training program that communicates the potential health and safety hazards associated with work on the site and instructs the personnel in procedures for doing the work safely. The level of training provided shall be consistent with the personnel's job function and conform to CAL-OSHA regulations. The training, including subsequent training required until completion of the project, shall be provided by the Contractor. The Contractor shall provide a certification of completion of the Safety Training Program to all personnel. Personal protective equipment required by State personnel to inspect the work shall be provided by the Contractor. The number of State personnel requiring the above mentioned safety training program and personal protective equipment will be 25.

PAYMENT

Full compensation for conforming to the requirements of this section shall be considered as included in the contract lump sum price paid for this contract change order 64 work involved, including all supplements, and no additional compensation will be allowed therefor.

5-1.11 ENVIRONMENTALLY SENSITIVE AREAS (GENERAL)

A. ENVIRONMENTALLY SENSITIVE AREAS

Environmentally sensitive areas (ESA) shall consist of areas within and near the limits of construction where access is prohibited or limited for the preservation of archeological site, historic architectural resource or existing vegetation, or protection of biological habitat as shown on the plans. The Engineer will determine the exact location of the boundaries of the ESAs. No work shall be conducted within the ESAs, except ESAs 1a and 1b:

1. ESA 1a and 1b, Environmentally Sensitive Areas
   ESA 1a consists of asphalt concrete paved area and unpaved slope area.
   ESA 1b is located within the asphalt concrete paved area.

The boundaries of the paved areas of the ESAs 1a and 1b shall be installed with a 200-mm white thermoplastic delineation.

Within the paved areas and delineated boundaries of the ESAs 1a and 1b, no work involving asphalt removal or earth disturbance and/or removal, including but not limited to driving posts for fencing, signing, or utility trenching, shall be allowed.. Limited access to these ESAs may be allowed for vehicle and equipment access, storage or transport of materials or equipment vehicle or equipment access, storage and stockpiling, or transport of materials, when approved in writing by the Engineer.

Within the unpaved slope area of ESA 1a, no work involving earth disturbance, including but not limited to driving posts for fencing, or signing, shall be allowed. The Contractor shall submit to the Engineer the protection plans including the scope of the work, in conformance with the requirements in "Working Drawings," of these special provisions. The Contractor equipment access will not be allowed, unless the Contractor has obtained a written approval from the Engineer.

2. ESA 2a, 2b and 2c
   ESA 2a consists of Building No. 262 (Torpedo Factory), Historic Architectural Resource
   ESA 2b consists of the Senior Officers' Quarters Historic District (Quarters 1 through 7), Historic Architectural Resource, and grounds.
   ESA 2c consists of Quarters 8, and grounds
3. ESA 3, Quarters 10, Building 267 (garage), and grounds.
4. ESA 5, Vegetation, Environmentally Sensitive Areas, including mature vegetation screen located on slope southwest of Quarters 1 (Nimitz House), and pittosporum trees
5. ESA 6, Tidal wetlands, water-based ESA (by others), located on the north side of YBI
6. ESA 7, Eelgrass beds, water-based ESA (by others), located on the south sides of YBI
7. ESA 8, Eelgrass beds, water-based ESA (by others), located on the north sides of YBI
8. ESA 9a and 9b, concrete retaining walls and weir,Historic Architectural Resource

Attention is directed to Section 7—1.01 "Laws to be Observed," and Section 7—1.04 "Permits and Licenses," of the Standard Specifications regarding State and Federal regulations, permits, or agreements which pertain to an ESA.

Water-based ESA boundaries have been marked with USCG-approved buoys, and have been established and will be maintained by others.

Land-based ESA boundaries shall be clearly marked by either the installation of Temporary Fence (Type ESA) or thermoplastic pavement delineation as specified elsewhere in these special provisions. The boundaries shall be checked periodically and the markings repaired or replaced as necessary during construction.

Within the boundaries of land-based ESAs 1a (unpaved area), ESAs 2b and 2c, ESA 3, ESA 5, and ESA 9a and 9b and water-based ESAs 6, 7, and 8, no project related activities shall take place, without the written approval from the Engineer. This specifically prohibits vehicle and barge access, storage or transport of any materials, including hydrocarbon and lead contaminated material, or any other project related activities. The Contractor shall take such measures, including the posting of written notices to his employees and subcontractors, to ensure that ESAs are not entered or disturbed.

The Contractor shall mitigate damage or impacts to the ESAs caused by the Contractor's operations, at the Contractor's expense in accordance with Section 7-1.11 of the Standard Specifications. Any additional mitigation assessed to the Department will be the responsibility of

the Contractor. If necessary, deductions from moneys due or to become due the Contractor will be made for the mitigation costs.

RESOURCE REGULATIONS AND MANDATES

In compliance with Section 106 of the National Historic Preservation Act of 1966, any archaeological resource discovered during construction activities must be evaluated by the Department of Transportation Archaeologist.

The California Public Resources Code (PRC) Sections 5097.00 and 5097.98 require protection of Native American remains which might be discovered and outlines procedures for handling any burials found. The California PRC Section 5097.9 and Health and Safety Code Section 7050 require coordination with the Native American Heritage Commission.

Under California PRC, Chapter 1.7, Section 5097.5, it is a misdemeanor charge for anyone to knowingly disturb a historical feature or steal an archaeological resource. The California Administrative Code, Title 14, Section 4307, mandates that no person shall disfigure any object of historical interest or value. Under California Penal Code, Title 14, Part 1, Section 622-1.2, it is a misdemeanor to destroy anything of historical value within any public place.

All archaeological resources located on Department of Transportation property are property of the State of California. All archaeological resources located on Federal property are property of the Federal government and are governed by federal environmental laws, such as, but not limited to, the Antiquities Act of 1906, the Archaeological Resources Protection Act, and the Native American Graves Protection and Repatriation Act.

PROTECTION OF ESA 2a, BUILDING No. 262

Attention is directed to Section 7-1.12, "Preservation of Property," and Section 7-1.12, "Responsibility for Damage," of the Standard Specifications, and the provisions in "Photo Survey of Existing Facilities," and "Vibration Monitoring," of these special provisions, regarding Building No. 262, a historical building that is included in ESA 2.

Attention is directed to "Project Information," of the special provisions, regarding the as-built plans of Building No. 262.

The Contractor shall take measures to protect the building from damage caused by the Contractor's operations. The Contractor shall submit a building protection plan for the Engineer's review at least 30 days prior to the start of adjacent or overhead construction. The Contractor shall also notify the Engineer at least 48 hours prior to the start of adjacent or overhead construction.

The Contractor shall bear full liability for any damage to Building No. 262 caused by the Contractor's operations.

Should any damage to Building No. 262 occur, the Contractor shall notify the Engineer within 24 hours. The Engineer may order the suspension of construction operations until the Contractor takes all necessary measures to prevent further damage to the building, and until an approved repair is completed. The Contractor shall submit a repair plan to the Engineer for approval prior to the start of such work. The Engineer will review the plan within 90 days. All repairs must follow the Secretary of the Interior's Standards for the Treatment of Historic Properties (http://www2.cr.nps.gov/tps/standguide/index.htm), and must be undertaken by a licensed preservation architect who meets the Secretary of the Interior's Professional Qualifications Standards for Historic Architecture (http://www.cr.nps.gov/local-law/arch_stnds_9.htm). The Department may

retain not less than $2,100,000 from moneys due or that may become due the Contractor under the contract, until an approved repair or reconstruction is complete.

B. AREA TO BE MONITOR (ATM)

The Department Archeologist will monitor the delineated ATM area.

No construction activities involving asphalt removal or earth disturbance and/or removal shall be allowed within the ATM area shown on the plans, unless the Contractor has obtained a writing approval from the Engineer.

The Contractor shall obtained the Engineer's approval in writing at least 20 days in advance of the beginning of the removal of the top 0.6-m in depth of roadway excavation within the ATM, in order to have the Department Archaeologist begin to mobilize

CONSTRUCTION

The Department Archaeologist shall have the authority to halt construction operations in the vicinity of an archaeological find, if significant or potentially significant cultural resources are exposed or if the find will be adversely affected by construction operations.

In the event that human skeletal material or archaeological resources should be uncovered within the ATM area and/or contract limits, the Contractor shall immediately notify the Engineer, who in turn will notify the Department Archaeologist and the State may conduct an archaeological investigation. The Contractor's construction activities within 15-m of the find shall be halted immediately and shall not be resumed until so permitted, in writing by the Engineer.

When determined by the Department Archeologist that an archeological investigation is required, and as requested by the Engineer, the Contractor shall provide construction equipment and operators and/or laborers and shall cooperate with and assist Department Archaeologist(s) in their conducting of any of the archaeological work, if necessary.

The Contractor shall provide, within 24 hours at the request of the Engineer:

1. A grading bucket with flat blade.
2. Suitable access/egress ramp or ladders or stairs in the ATM area as directed by the Engineer.

The above equipment and material items required for the archaeological work as specified in this section will be paid for as extra work as provided in Section 4-1.03D of the Standard Specifications.

If, in the opinion of the Engineer, the Contractor's operations are delayed or interfered with by reason of such discoveries, the State will compensate the Contractor for the delays to the extent provided in Section 8-1.09, "Right of Way Delays," of the Standard Specifications, and not otherwise, except as provided in Section 8-1.10, "Utility and Non-Highway Facilities," of the Standard Specifications.

C. SPECIAL CONSTRUCTION AREA (SCA)

The special construction area is designated as the landscaping restoration area to be constructed by others.

The Contractor will be allowed inside SCA area. The Contractor shall not encroach into the designated ESA area bounded by ESA 2b, the Senior Officers' Quarters Historic District (Quarters 1

through 7), as shown on the plans. Damages to the existing pavement, sidewalk and cub caused by the Contractor's operations, shall be replaced in kind at the Contractor's expenses.

PAYMENT

Full compensation for checking, repairing or replacing the land-based ESA marking shall be considered as included in the contract lump sum price paid for this contract change order 64 work involved, including all supplements, and no separate payment will be made therefor.

Full compensation for protecting and submitting the protection plan for the unpaved slope area of the ESA 1a shall be considered as included in the contract lump sum price paid for this contract change order 64 work involved, including all supplements, and no separate payment will be made therefor.

5-1.12 SOUND CONTROL REQUIREMENTS

Sound control shall conform to the provisions in Section 7-1.01I, "Sound Control Requirements," of the Standard Specifications and these special provisions.

The noise level from the Contractor's operations, between the hours of 7:00 p.m. and 7:00 a.m., shall not exceed 78 dbA at a distance of 15 m from the source. Impact-type mechanical operations, such as pile-driving and jack-hammering shall not be conducted between the hours of 7:00 p.m. and 7:00 a.m. At all times, the Contractor shall be responsible for complying with local ordinances regulating noise levels as well as the sound requirements of this section.

The noise level requirement shall apply to the equipment on the job or related to the job, including but not limited to trucks, transit mixers or transient equipment that may or may not be owned by the Contractor. The use of loud sound signals shall be avoided in favor of light warnings except those required by safety laws for the protection of personnel.

Full compensation for conforming to the requirements of this section shall be considered as included in the contract lump sum price paid for this contract change order 64 work involved, including all supplements, and no additional compensation will be allowed therefor.

Noise monitoring activities will be conducted by the Department of Transportation. The Contractor shall coordinate with the Department of Transportation monitors and allow them access to noise monitoring locations.

8-1.01 SUBSTITUTION OF NON-METRIC MATERIALS AND PRODUCTS

Only materials and products conforming to the requirements of the specifications shall be incorporated in the work. When metric materials and products are not available, and when approved by the Engineer, and at no cost to the State, materials and products in the United States Standard Measures which are of equal quality and of the required properties and characteristics for the purpose intended, may be substituted for the equivalent metric materials and products, subject to the following provisions:

A. Materials and products shown on the plans or in the special provisions as being equivalent may be substituted for the metric materials and products specified or detailed on the plans.
B. Before other non-metric materials and products will be considered for use, the Contractor shall furnish, at the Contractor's expense, evidence satisfactory to the Engineer that the materials and products proposed for use are equal to or better than the materials and products specified or detailed on the plans. The burden of proof as to the quality and suitability of

substitutions shall be upon the Contractor and the Contractor shall furnish necessary information as required by the Engineer. The Engineer will be the sole judge as to the quality and suitability of the substituted materials and products and the Engineer's decision will be final.

C. When the Contractor elects to substitute non-metric materials and products, including materials and products shown on the plans or in the special provisions as being equivalent, the list of sources of material specified in Section 6-1.01, "Source of Supply and Quality of Materials," of the Standard Specification shall include a list of substitutions to be made and contract items involved. In addition, for a change in design or details, the Contractor shall submit plans and working drawings in conformance with the provisions in Section "Working Drawings," of these special provisions. The plans and working drawings shall be submitted at least 7 days before the Contractor intends to begin the work involved.

Unless otherwise specified, the following substitutions of materials and products will be allowed:

SUBSTITUTION TABLE FOR PLAIN WIRE REINFORCEMENT
ASTM Designation: A 82

METRIC SIZE SHOWN ON THE PLANS mm^2	SIZE TO BE SUBSTITUTED $inch^2 \times 100$
MW9	W1.4
MW10	W1.6
MW13	W2.0
MW15	W2.3
MW19	W2.9
MW20	W3.1
MW22	W3.5
MW25	W3.9, except W3.5 in piles only
MW26	W4.0
MW30	W4.7
MW32	W5.0
MW35	W5.4
MW40	W6.2
MW45	W6.5
MW50	W7.8
MW55	W8.5, except W8.0 in piles only
MW60	W9.3
MW70	W10.9, except W11.0 in piles only
MW80	W12.4
MW90	W14.0
MW100	W15.5

SUBSTITUTION TABLE FOR BAR REINFORCEMENT

METRIC BAR DESIGNATION NUMBER[1] SHOWN ON THE PLANS	BAR DESIGNATION NUMBER[2] TO BE SUBSTITUTED
10	3
13	4
16	5
19	6
22	7
25	8
29	9
32	10
36	11
43	14
57	18

[1]Bar designation numbers approximate the number of millimeters of the nominal diameter of the bars.

[2]Bar numbers are based on the number of eighths of an inch included in the nominal diameter of the bars.

No adjustment will be required in spacing or total number of reinforcing bars due to a difference in minimum yield strength between metric and non-metric bars.

SUBSTITUTION TABLE FOR SIZES OF:

(1) STEEL FASTENERS FOR GENERAL APPLICATIONS (ASTM Designation: A 307 or AASHTO Designation: M 314, Grade 36 or 55), and

(2) HIGH STRENGTH STEEL FASTENERS (ASTM Designation: A 325 or A 449)

METRIC SIZE SHOWN ON THE PLANS mm	SIZE TO BE SUBSTITUTED inch
6 or 6.35	1/4
8 or 7.94	5/16
10 or 9.52	3/8
11 or 11.11	7/16
13, 12.70, or M12	1/2
14 or 14.29	9/16
16, 15.88, or M16	5/8
19, 19.05, or M20	3/4
22, 22.22, or M22	7/8
24, 25, 25.40, or M24	1
29, 28.58, or M27	1-1/8
32, 31.75, or M30	1-1/4
35 or 34.93	1-3/8
38, 38.10, or M36	1-1/2
44 or 44.45	1-3/4
51 or 50.80	2
57 or 57.15	2-1/4
64 or 63.50	2-1/2
70 or 69.85	2-3/4
76 or 76.20	3
83 or 82.55	3-1/4
89 or 88.90	3-1/2
95 or 95.25	3-3/4
102 or 101.60	4

SUBSTITUTION TABLE FOR NOMINAL THICKNESS OF SHEET METAL

UNCOATED HOT AND COLD ROLLED SHEETS		HOT-DIPPED ZINC COATED SHEETS (GALVANIZED)	
METRIC THICKNESS SHOWN ON THE PLANS mm	GAGE TO BE SUBSTITUTED inch	METRIC THICKNESS SHOWN ON THE PLANS mm	GAGE TO BE SUBSTITUTED inch
7.94	0.3125	4.270	0.1681
6.07	0.2391	3.891	0.1532
5.69	0.2242	3.510	0.1382
5.31	0.2092	3.132	0.1233
4.94	0.1943	2.753	0.1084
4.55	0.1793	2.372	0.0934
4.18	0.1644	1.994	0.0785
3.80	0.1495	1.803	0.0710
3.42	0.1345	1.613	0.0635
3.04	0.1196	1.461	0.0575
2.66	0.1046	1.311	0.0516
2.28	0.0897	1.158	0.0456
1.90	0.0747	1.006 or 1.016	0.0396
1.71	0.0673	0.930	0.0366
1.52	0.0598	0.853	0.0336
1.37	0.0538	0.777	0.0306
1.21	0.0478	0.701	0.0276
1.06	0.0418	0.627	0.0247
0.91	0.0359	0.551	0.0217
0.84	0.0329	0.513	0.0202
0.76	0.0299	0.475	0.0187
0.68	0.0269	--------	--------
0.61	0.0239	--------	--------
0.53	0.0209	--------	--------
0.45	0.0179	--------	--------
0.42	0.0164	--------	--------
0.38	0.0149	--------	--------

SUBSTITUTION TABLE FOR WIRE

METRIC THICKNESS SHOWN ON THE PLANS mm	WIRE THICKNESS TO BE SUBSTITUTED inch	GAGE NO.
6.20	0.244	3
5.72	0.225	4
5.26	0.207	5
4.88	0.192	6
4.50	0.177	7
4.11	0.162	8
3.76	0.148	9
3.43	0.135	10
3.05	0.120	11
2.69	0.106	12
2.34	0.092	13
2.03	0.080	14
1.83	0.072	15
1.57	0.062	16
1.37	0.054	17
1.22	0.048	18
1.04	0.041	19
0.89	0.035	20

SUBSTITUTION TABLE FOR PIPE PILES

METRIC SIZE SHOWN ON THE PLANS mm x mm	SIZE TO BE SUBSTITUTED inch x inch
PP 360 x 4.55	NPS 14 x 0.179
PP 360 x 6.35	NPS 14 x 0.250
PP 360 x 9.53	NPS 14 x 0.375
PP 360 x 11.12	NPS 14 x 0.438
PP 406 x 12.70	NPS 16 x 0.500
PP 460 x T	NPS 18 x T"
PP 508 x T	NPS 20 x T"
PP 559 x T	NPS 22 x T"
PP 610 x T	NPS 24 x T"
PP 660 x T	NPS 26 x T"
PP 711 x T	NPS 28 x T"
PP 762 x T	NPS 30 x T"
PP 813 x T	NPS 32 x T"
PP 864 x T	NPS 34 x T"
PP 914 x T	NPS 36 x T"
PP 965 x T	NPS 38 x T"
PP 1016 x T	NPS 40 x T"
PP 1067 x T	NPS 42 x T"
PP 1118 x T	NPS 44 x T"
PP 1219 x T	NPS 48 x T"
PP 1524 x T	NPS 60 x T"

The thickness in millimeters (T) represents an exact conversion of the thickness in inches (T").

SUBSTITUTION TABLE FOR CIDH CONCRETE PILING

METRIC SIZE SHOWN ON THE PLANS	ACTUAL AUGER SIZE TO BE SUBSTITUTED inches
350 mm	14
400 mm	16
450 mm	18
600 mm	24
750 mm	30
900 mm	36
1.0 m	42
1.2 m	48
1.5 m	60
1.8 m	72
2.1 m	84
2.4 m	96
2.7 m	108
3.0 m	120
3.3 m	132
3.6 m	144
4.0 m	156

SUBSTITUTION TABLE FOR STRUCTURAL TIMBER AND LUMBER

METRIC MINIMUM DRESSED DRY, SHOWN ON THE PLANS mm x mm	METRIC MINIMUM DRESSED GREEN, SHOWN ON THE PLANS mm x mm	NOMINAL SIZE TO BE SUBSTITUTED inch x inch
19x89	20x90	1x4
38x89	40x90	2x4
64x89	65x90	3x4
89x89	90x90	4x4
140x140	143x143	6x6
140x184	143x190	6x8
184x184	190x190	8x8
235x235	241x241	10x10
286x286	292x292	12x12

SUBSTITUTION TABLE FOR NAILS AND SPIKES

METRIC COMMON NAIL, SHOWN ON THE PLANS Length, mm Diameter, mm	METRIC BOX NAIL, SHOWN ON THE PLANS Length, mm Diameter, mm	METRIC SPIKE, SHOWN ON THE PLANS Length, mm Diameter, mm	SIZE TO BE SUBSTITUTED Penny-weight
50.80 2.87	50.80 2.51	———	6d
63.50 3.33	63.50 2.87	———	8d
76.20 3.76	76.20 3.25	76.20 4.88	10d
82.55 3.76	82.55 3.25	82.55 4.88	12d
88.90 4.11	88.90 3.43	88.90 5.26	16d
101.60 4.88	101.60 3.76	101.60 5.72	20d
114.30 5.26	114.30 3.76	114.30 6.20	30d
127.00 5.72	127.00 4.11	127.00 6.68	40d
———	———	139.70 7.19	50d
———	———	152.40 7.19	60d

SUBSTITUTION TABLE FOR IRRIGATION COMPONENTS

METRIC WATER METERS, TRUCK LOADING STANDPIPES, VALVES, BACKFLOW PREVENTERS, FLOW SENSORS, WYE STRAINERS, FILTER ASSEMBLY UNITS, PIPE SUPPLY LINES, AND PIPE IRRIGATION SUPPLY LINES SHOWN ON THE PLANS DIAMETER NOMINAL (DN) mm	NOMINAL SIZE TO BE SUBSTITUTED inch
15	1/2
20	3/4
25	1
32	1-1/4
40	1-1/2
50	2
65	2-1/2
75	3
100	4
150	6
200	8
250	10
300	12
350	14
400	16

Unless otherwise specified, substitutions of United States Standard Measures standard structural shapes corresponding to the metric designations shown on the plans and in conformance with the requirements in ASTM Designation: A 6/A 6M, Annex 2, will be allowed.

8-2.02 PORTLAND CEMENT CONCRETE

Portland cement concrete shall conform to the provisions in Section 90, "Portland Cement Concrete," of the Standard Specifications and these special provisions.

Cementitious material to be used in portland cement concrete shall conform to the provisions for cement and mineral admixtures in Section 90-2, "Materials," of the Standard Specifications, and shall be a combination of "Type II Modified" Portland cement and mineral admixture.

References to Section 90-2.01, "Portland Cement," of the Standard Specifications shall mean Section 90-2.01, "Cement," of the Standard Specifications.

Mineral admixture shall be combined with cement in conformance with the provisions in Section 90-4.08, "Required Use of Mineral Admixtures," of the Standard Specifications for the concrete materials specified in Section 56-2, "Roadside Signs," of the Standard Specifications.

The requirements of Section 90-4.08, "Required Use of Mineral Admixture," of the Standard Specifications shall not apply to Section 19-3.025C, "Soil Cement Bedding," of the Standard Specifications.

The Department maintains a list of sources of fine and coarse aggregate that have been approved for use with a reduced amount of mineral admixture in the total amount of cementitious material to be used. A source of aggregate will be considered for addition to the approved list if the producer of the aggregate submits to the Transportation Laboratory certified test results from a qualified testing laboratory that verify the aggregate complies with the requirements. Prior to starting the testing, the aggregate test shall be registered with the Department. A registration number can be obtained by calling (916) 227-7228. The registration number shall be used as the identification for the aggregate sample in correspondence with the Department. Upon request, a split of the tested sample shall be provided to the Department. Approval of aggregate will depend upon compliance with the specifications, based on the certified test results submitted, together with any replicate testing the Department may elect to perform. Approval will expire 3 years from the date the most recent registered and evaluated sample was collected from the aggregate source.

Qualified testing laboratories shall conform to the following requirements:

A. Laboratories performing ASTM Designation: C 1293 shall participate in the Cement and Concrete Reference Laboratory (CCRL) Concrete Proficiency Sample Program and shall have received a score of 3 or better on all tests of the previous 2 sets of concrete samples.
B. Laboratories performing ASTM Designation: C 1260 shall participate in the Cement and Concrete Reference Laboratory (CCRL) Pozzolan Proficiency Sample Program and shall have received a score of 3 or better on the shrinkage and soundness tests of the previous 2 sets of pozzolan samples.

Aggregates on the list shall conform to one of the following requirements:

A. When the aggregate is tested in conformance with the requirements in California Test 554 and ASTM Designation: C 1293, the average expansion at one year shall be less than or equal to 0.040 percent; or
B. When the aggregate is tested in conformance with the requirements in California Test 554 and ASTM Designation: C 1260, the average of the expansion at 16 days shall be less than or equal to 0.15 percent.

The amounts of cement and mineral admixture used in cementitious material shall be sufficient to satisfy the minimum cementitious material content requirements specified in Section 90-1.01, "Description," or Section 90-4.05, "Optional Use of Chemical Admixtures," of the Standard Specifications and shall conform to the following:

A. The minimum amount of cement shall not be less than 75 percent by mass of the specified minimum cementitious material content.
B. The minimum amount of mineral admixture to be combined with cement shall be determined using one of the following criteria:

    1. When the calcium oxide content of a mineral admixture is equal to or less than 2 percent by mass, the amount of mineral admixture shall not be less than 15 percent by mass of the total amount of cementitious material to be used in the mix.
    2. When the calcium oxide content of a mineral admixture is greater than 2 percent by mass, and any of the aggregates used are not listed on the approved list as specified in these

special provisions, then the amount of mineral admixture shall not be less than 25 percent by mass of the total amount of cementitious material to be used in the mix.

3. When the calcium oxide content of a mineral admixture is greater than 2 percent by mass and the fine and coarse aggregates are listed on the approved list as specified in these special provisions, then the amount of mineral admixture shall not be less than 15 percent by mass of the total amount of cementitious material to be used in the mix.
4. When a mineral admixture that conforms to the provisions for silica fume in Section 90-2.04, "Admixture Materials," of the Standard Specifications is used, the amount of mineral admixture shall not be less than 10 percent by mass of the total amount of cementitious material to be used in the mix.
5. When a mineral admixture that conforms to the provisions for silica fume in Section 90-2.04, "Admixture Materials," of the Standard Specifications is used and the fine and coarse aggregates are listed on the approved list as specified in these special provisions, then the amount of mineral admixture shall not be less than 7 percent by mass of the total amount of cementitious material to be used in the mix.

C. The total amount of mineral admixture shall not exceed 35 percent by mass of the total amount of cementitious material to be used in the mix. Where Section 90-1.01, "Description," of the Standard Specifications specifies a maximum cementitious content in kilograms per cubic meter, the total mass of cement and mineral admixture per cubic meter shall not exceed the specified maximum cementitious material content.

8-2.03 CORROSION CONTROL FOR PORTLAND CEMENT CONCRETE

Permanent structures with portland cement concrete in contact with soil or rock including that utilized for cast-in-drilled-hole concrete piles, footings, retaining walls and columns, are considered to be in a corrosive environment and shall conform to the provisions in Section 90, "Portland Cement Concrete," of the Standard Specifications and these special provisions.

Cementitious material to be used in portland cement concrete shall conform to the provisions for cement and mineral admixtures in Section 90-2, "Materials," of the Standard Specifications, and shall be a combination of "Type II Modified" portland cement and mineral admixture.

Concrete in a corrosive environment shall contain not less than 400 kg of cementitous material per cubic meter.

No reduction in the cementitious material content specified or ordered, in conformance with the provisions in Section 90-4.05, "Optional Use of Chemical Admixtures," of the Standard Specifications, will be allowed for concrete in a corrosive environment.

Unless otherwise specified, for concrete in a corrosive environment, the amount of cement shall be 75 percent by mass, and the amount of mineral admixture to be combined with cement shall be 25 percent by mass, of the total amount of cementitious material to be used in the concrete mix. The calcium oxide content of mineral admixtures shall not exceed 10 percent.

Mineral admixture for concrete in a corrosive environment shall conform to ASTM Designation: C618 Class F or N.

The amount of free water used in concrete in a corrosive environment shall not exceed 160 kg/ m^3, plus 40 kg for each 100 kg of cementitious material in excess of 400 kg/ m^3.

Full compensation for conforming to the above requirements shall be considered as included in the contract lump sum price paid for this contract change order 64 work involved, including all supplements, and no additional compensation will be allowed therefor.

SECTION 8-3. WELDING

8-3.01 WELDING

GENERAL

Flux core welding electrodes conforming to the requirements of AWS A5.20 E6XT-4 or E7XT-4 shall not be used to perform welding for this project.

Wherever reference is made to the following AWS welding codes in the Standard Specifications, on the plans, or in these special provisions, the year of adoption for these codes shall be as listed:

AWS Code	Year of Adoption
D1.1	2002
D1.4	1998
D1.5	2002
D1.6	1999

Requirements of the AWS welding codes shall apply unless specified otherwise in the Standard Specifications, on the plans, or in these special provisions. Wherever the abbreviation AWS is used, it shall be equivalent to the abbreviations ANSI/AWS or AASHTO/AWS.

Section 6.1.1.1 of AWS D1.5 is replaced with the following:

Quality Control (QC) shall be the responsibility of the Contractor. As a minimum, the Contractor shall perform inspection and testing of each weld joint prior to welding, during welding, and after welding as specified in this section and as necessary to ensure that materials and workmanship conform to the requirements of the contract documents.

Sections 6.1.3 through 6.1.4.3 of AWS D1.1, Section 7.1.2 of AWS D1.4, and Sections 6.1.1.2 through 6.1.3.3 of AWS D1.5 are replaced with the following:

The QC Inspector shall be the duly designated person who acts for and on behalf of the Contractor for inspection, testing, and quality related matters for all welding.

Quality Assurance (QA) is the prerogative of the Engineer. The QA Inspector is the duly designated person who acts for and on behalf of the Engineer.

The QC Inspector shall be responsible for quality control acceptance or rejection of materials and workmanship, and shall be currently certified as an AWS Certified Welding Inspector (CWI) in conformance with the requirements in AWS QC1, " Standard for AWS Certification of Welding Inspectors."

The QC Inspector may be assisted by an Assistant QC Inspector provided that this individual is currently certified as an AWS Certified Associate Welding Inspector (CAWI) in conformance with the requirements in AWS QC1, "Standard for AWS Certification of Welding Inspectors." The Assistant QC Inspector may perform inspection under the direct supervision of the QC Inspector provided the Assistant is always within visible and audible range of the QC Inspector. The QC Inspector shall be responsible for signing all reports and for determining if welded materials conform to workmanship and acceptance criteria. The ratio of QC Assistants to QC Inspectors shall not exceed 5 to 1.

When the term "Inspector" is used without further qualification, it shall refer to the QC Inspector.

Section 6.14.6, "Personnel Qualification," of AWS D1.1, Section 7.8, "Personnel Qualification," of AWS D1.4, and Section 6.1.3.4, "Personnel Qualification," of AWS D1.5 are replaced with the following:

Personnel performing nondestructive testing (NDT) shall be qualified and certified in conformance with the requirements of the American Society for Nondestructive Testing (ASNT) Recommended Practice No. SNT-TC-1A and the Written Practice of the NDT firm. The Written Practice of the NDT firm shall meet or exceed the guidelines of the ASNT Recommended Practice No. SNT-TC-1A. Individuals who perform NDT, review the results, and prepare the written reports shall be either:

A. Certified NDT Level II technicians, or;
B. Level III technicians who hold a current ASNT Level III certificate in that discipline and are authorized and certified to perform the work of Level II technicians.

Section 6.5.4 of AWS D1.5 is replaced with the following:

The QC Inspector shall inspect and approve each joint preparation, assembly practice, welding technique, joint fit-up, and the performance of each welder, welding operator, and tack welder to make certain that the applicable requirements of this code and the approved Welding Procedure Specification (WPS) are met. The QC Inspector shall examine the work to make certain that it meets the requirements of Sections 3 and 6.26. The size and contour of all welds shall be measured using suitable gages. Visual inspection for cracks in welds and base metal, and for other discontinuities should be aided by strong light magnifiers, or such other devices as may be helpful. Acceptance criteria different from those specified in this code may be used when approved by the Engineer.

Section 6.6.5, "Nonspecified NDT Other than Visual," of AWS D1.1, Section 6.6.5 of AWS D1.4 and Section 6.6.5 of AWS D1.5 shall not apply.

For any welding, the Engineer may direct the Contractor to perform NDT that is in addition to the visual inspection or NDT specified in the AWS or other specified welding codes, in the Standard Specifications, or in these special provisions. Additional NDT required by the Engineer will be paid for as extra work as provided in Section 4-1.03D, "Extra Work," of the Standard Specifications. Should any welding deficiencies be discovered by this additional NDT, all costs associated with the repair of the deficient area, including NDT of the weld and of the weld repair, and any delays caused by the repair, shall be at the Contractor's expense.

Repair work to correct welding deficiencies discovered by visual inspection or NDT, or by additional NDT directed or performed by the Engineer, and any associated delays or expenses caused to the Contractor by performing these repairs, shall be at the Contractor's expense.

The Engineer shall have the authority to verify the qualifications or certifications of any welder, QC Inspector, or NDT personnel to specified levels by retests or other means approved by the Engineer.

Continuous inspection shall be provided when any welding is being performed. Continuous inspection, as a minimum, shall include having a QC Inspector within such close proximity of all

welders or welding operators so that inspections by the QC Inspector of each welding operation at each welding location shall not lapse for a period exceeding 30 minutes.

Inspection and approval of all joint preparations, assembly practices, joint fit-ups, welding techniques, and the performance of each welder, welding operator, and tack welder shall be documented by the QC Inspector on a daily basis for each day welding is performed. For each inspection, including fit-up, Welding Procedure Specification (WPS) verification, and final weld inspection, the QC Inspector shall confirm and document compliance with the requirements of the AWS or other specified code criteria and the requirements of these special provisions on all welded joints before welding, during welding, and after the completion of each weld.

When joint weld details that are not prequalified to the details of Section 3 of AWS D1.1 or to the details of Figure 2.4 or 2.5 of AWS D1.5 are proposed for use in the work, the joint details, their intended locations, and the proposed welding parameters and essential variables, will be approved by the Engineer. The Engineer shall have 2 weeks to complete the review of the proposed joint detail locations. In the event the Engineer fails to complete the review within the time allowed, and if, in the opinion of the Engineer, completion of the work is delayed or interfered with by reason of the Engineer's delay in completing the review, the Contractor will be compensated for any resulting loss, and an extension of time will be granted, in the same manner as provided for in Section 8-1.09, "Right of Way Delays," of the Standard Specifications. Upon approval of the proposed joint detail locations and qualification of the proposed joint details, welders and welding operators using these details shall perform a qualification test plate using the WPS variables and the joint detail to be used in production. The test plate shall have the maximum thickness to be used in production and a minimum length of 180 mm and minimum finish welded width 460 mm. The test plate shall be mechanically and radiographically tested. Mechanical and radiographic testing and acceptance criteria shall be as specified in the applicable AWS codes.

In addition to the requirements specified in the applicable code, the period of effectiveness for a welder's or welding operator's qualification shall be a maximum of 3 years for the same weld process, welding position, and weld type. If production welding will be performed without gas shielding, then qualification shall also be without gas shielding. Excluding welding of fracture critical members, a valid qualification at the beginning of work on a contract will be acceptable for the entire period of the contract, as long as the welder's or welding operator's work remains satisfactory.

The Engineer will witness all qualification tests for WPSs that were not previously approved by the Department. An approved independent third party will witness the qualification tests for welders or welding operators. The independent third party shall be a current CWI and shall not be employed by the contractor performing the welding. The Engineer shall have 2 weeks to review the qualifications and copy of the current certification of the independent third party. In the event the Engineer fails to complete the review within the time allowed, and if, in the opinion of the Engineer, completion of the work is delayed or interfered with by reason of the Engineer's delay in completing the review, the Contractor will be compensated for any resulting loss, and an extension of time will be granted, in the same manner as provided for in Section 8-1.09, "Right of Way Delays," of the Standard Specifications. The Contractor shall notify the Engineer one week prior to performing any qualification tests. Witnessing of qualification tests by the Engineer shall not constitute approval of the intended joint locations, welding parameters, or essential variables.

In addition to the requirements of AWS D1.5 Section 5.12 or 5.13, welding procedures qualification, for work welded in conformance with that code, shall conform to the following requirements:

A. Unless considered prequalified, fillet welds, including reinforcing fillet welds, shall be qualified in each position. The fillet weld soundness test shall be conducted using the essential variables of the WPS as established by the Procedure Qualification Record (PQR.)
B. For qualification of joints that do not conform to Figures 2.4 and 2.5 of AWS D1.5, two WPS qualification tests are required. The tests conforming to AWS D1.5 Section 5.13 shall be conducted using both Figure 5.1 and Figure 5.3. The test conforming to Figure 5.3 shall be conducted using the same welding electrical parameters that were established for the test conducted conforming to Figure 5.1.
C. The travel speed, current, and voltage values that are used for tests conducted per AWS D1.5 Section 5.12 or 5.13 shall be consistent for each weld joint, and shall in no case vary by more than 10 percent for travel speed, 10 percent for current, and 7 percent for voltage.
D. For a WPS qualified in conformance with AWS D1.5 Section 5.13, the values to be used for calculating ranges for current and voltage shall be based on the average of all weld passes made in the test. Heat input shall be calculated using the average of current and voltage of all weld passes made in the test for a WPS qualified in conformance with Section 5.12 or 5.13.
E. To qualify for unlimited material thickness, two qualification tests are required for WPSs utilized for welding material thicknesses greater than 38 mm. One test shall be conducted using 20-mm thick test plates, and one test shall be conducted using test plates with a thickness between 38 mm and 50 mm. Two maximum heat input tests may be conducted for unlimited thickness qualification.
F. Macroetch tests are required for WPS qualification tests, and acceptance shall be per AWS D1.5 Section 5.19.3.
G. When a weld joint is to be made using a combination of qualified WPSs, each process shall be qualified separately.
H. When a weld joint is to be made using a combination of qualified and prequalified processes, the WPS shall reflect both processes and the limitations of essential variables, including weld bead placement, for both processes.
I. Prior to preparing mechanical test specimens, the PQR welds shall be inspected by visual and radiographic tests. Backing bar shall be 75 mm in width and shall remain in place during NDT testing. Results of the visual and radiographic tests shall comply with AWS D1.5 Section 6.26.2, excluding Section 6.26.2.2. Test plates that do not comply with both tests shall not be used.

WELDING QUALITY CONTROL

Welding quality control shall conform to the requirements in the AWS or other specified welding codes, the Standard Specifications, and these special provisions.

Unless otherwise specified, welding quality control shall apply when any work is welded in conformance with the provisions in Section 49, "Piling," Section 52, "Reinforcement," Section 55, "Steel Structures," or Section 75-1.035, "Bridge Joint Restrainer Units," of the Standard Specifications.

The welding of fracture critical members (FCMs) shall conform to the provisions specified in the Fracture Control Plan (FCP) and herein.

The Contractor shall designate in writing a welding Quality Control Manager (QCM). The QCM shall be responsible directly to the Contractor for the quality of welding, including materials and workmanship, performed by the Contractor and subcontractors.

The QCM shall be the sole individual responsible to the Contractor for submitting, receiving, reviewing, and approving all correspondence, required submittals, and reports to and from the Engineer. The QCM shall be a registered professional engineer or shall be currently certified as a CWI or a CAWI.

The QCM shall not be employed or compensated by any subcontractor, or by other persons or entities hired by subcontractors, who will provide other services or materials for the project. The QCM may be an employee of the Contractor.

Welding inspection personnel or NDT firms to be used in the work shall not be employed or compensated by any subcontractor, or by other persons or entities hired by subcontractors, who will provide other services or materials for the project, except for the following conditions:

A. The work is welded in conformance with AWS D1.5 and is performed at a permanent fabrication or manufacturing facility which is certified under the AISC Quality Certification Program, Category Cbr, Major Steel Bridges and Fracture Critical endorsement F.
B. The welding is performed on pipe pile material at a permanent pipe manufacturing facility authorized to apply the American Petroleum Institute (API) monogram for API 5L pipe.

For welding performed at such facilities, the inspection personnel or NDT firms may be employed or compensated by the facility performing the welding.

Prior to submitting the Welding Quality Control Plan (WQCP) required herein, a pre-welding meeting between the Engineer, the Contractor's QCM, and a representative from each entity performing welding or inspection for this project, shall be held to discuss the requirements for the WQCP.

The Contractor shall submit to the Engineer, in conformance with the provisions in "Working Drawings," of these special provisions, 2 copies of a separate WQCP for each subcontractor or supplier for each item of work for which welding is to be performed.

The Contractor shall allow the Engineer 2 weeks to review the WQCP submittal after a complete plan has been received. No welding shall be performed until the WQCP is approved in writing by the Engineer. In the event the Engineer fails to complete the review within the time allowed, and if, in the opinion of the Engineer, completion of the work is delayed or interfered with by reason of the Engineer's delay in completing the review, the Contractor will be compensated for any resulting loss, and an extension of time will be granted, in the same manner as provided for in Section 8-1.09, "Right of Way Delays," of the Standard Specifications.

An amended WQCP or any addendum to the approved WQCP shall be submitted to, and approved in writing by the Engineer, for proposed revisions to the approved WQCP. An amended WQCP or addendum will be required for revisions to the WQCP, including but not limited to a revised WPS; additional welders; changes in NDT firms, QC, or NDT personnel or procedures; or updated systems for tracking and identifying welds. The Engineer shall have 1 week to complete the review of the amended WQCP or addendum. Work affected by the proposed revisions shall not be performed until the amended WQCP or addendum has been approved. In the event the Engineer fails to complete the review within the time allowed, and if, in the opinion of the Engineer, completion of the work is delayed or interfered with by reason of the Engineer's delay in completing the review, the Contractor will be compensated for any resulting loss, and an extension of time will

be granted, in the same manner as provided for in Section 8-1.09, "Right of Way Delays," of the Standard Specifications.

Information regarding the contents, format, and organization of a WQCP, is available at the Transportation Laboratory or the following website:

http://www.dot.ca.gov/hq/esc/Translab/smbresources.htm

After final approval of the WQCP, amended WQCP, or addendum, the Contractor shall submit 7 copies to the Engineer of the approved documents. A copy of the Engineer approved document shall be available at each location where welding is to be performed.

A daily production log for welding shall be kept for each day that welding is performed. The log shall clearly indicate the locations of all welding. The log shall include the welders' names, amount of welding performed, any problems or deficiencies discovered, and any testing or repair work performed, at each location. The daily report from each QC Inspector shall also be included in the log.

The following items shall be included in a Welding Report that is to be submitted to the Engineer within 10 days following the performance of any welding:

A. Reports of all visual weld inspections and NDT.
B. Radiographs and radiographic reports, and other required NDT reports.
C. Documentation that the Contractor has evaluated all radiographs and other nondestructive tests and corrected all rejectable deficiencies, and all repaired welds have been reexamined by the required NDT and found acceptable.
D. Daily production log.

The following information shall be clearly written on the outside of radiographic envelopes: name of the QCM, name of the nondestructive testing firm, name of the radiographer, date, contract number, complete part description, and all included weld numbers or a report number, as detailed in the WQCP. In addition, all innerleaves shall have clearly written on them the part description and all included weld numbers, as detailed in the WQCP.

Reports regarding NDT shall be signed by both the NDT technician and the person that performed the review, and then submitted directly to the QCM for review and signature prior to submittal to the Engineer. Corresponding names shall be clearly printed or typewritten next to all signatures.

The Engineer will review the Welding Report to determine if the Contractor is in conformance with the WQCP. Unless otherwise specified, the Engineer shall be allowed 10 days to review the report and respond in writing after a complete Welding Report has been received. Prior to receiving notification from the Engineer of the Contractor's conformance with the WQCP, the Contractor may encase in concrete or cover welds for which a Welding Report has been submitted. However, should the Contractor elect to encase or cover those welds prior to receiving notification from the Engineer, it is expressly understood that the Contractor shall not be relieved of the responsibility for incorporating material in the work that conforms to the requirements of the plans and specifications. Material not conforming to these requirements will be subject to rejection. Should the Contractor elect to wait to encase or cover welds pending notification by the Engineer, and in the event the Engineer fails to complete the review within the time allowed, and if, in the opinion of the Engineer, completion of the work is delayed or interfered with by reason of the Engineer's delay in completing

the review, the Contractor will be compensated for any resulting loss, and an extension of time will be granted, in the same manner as provided for in Section 8-1.09, "Right of Way Delays," of the Standard Specifications.

The QC Inspector shall provide reports to the QCM on a daily basis for each day that welding is performed.

Except for noncritical weld repairs, the Engineer shall be notified immediately in writing when welding problems, deficiencies, base metal repairs, or any other type of repairs not submitted in the WQCP are discovered, and also of the proposed repair procedures to correct them. The Contractor shall allow the Engineer one week to review these procedures. No remedial work shall begin until the repair procedures are approved in writing by the Engineer. In the event the Engineer fails to complete the review within the time allowed, and if, in the opinion of the Engineer, completion of the work is delayed or interfered with by reason of the Engineer's delay in completing the review, the Contractor will be compensated for any resulting loss, and an extension of time will be granted, in the same manner as provided for in Section 8-1.09, "Right of Way Delays," of the Standard Specifications.

The QCM shall sign and furnish to the Engineer, a Certificate of Compliance in conformance with the provisions in Section 6-1.07, "Certificates of Compliance," of the Standard Specifications for each item of work for which welding was performed. The certificate shall state that all of the materials and workmanship incorporated in the work, and all required tests and inspections of this work, have been performed in conformance with the details shown on the plans, the Standard Specifications, and these special provisions.

PAYMENT

Full compensation for conforming to the requirements of "Welding" shall be considered as included in the contract lump sum price paid for this contract change order 64 work involved, including all supplements involved and no additional compensation will be allowed therefor.

SECTION 9. DESCRIPTION OF BRIDGE WORK

The bridge work to be done consists, in general, of constructing portions of the following structures as shown on the plans:

SAN FRANCISCO OAKLAND BAY BRIDGE EAST SPAN
YBI TRANSITION STRUCTURES
SUBSTRUCTURE ONLY
(Bridge No. 34-0006 L/R)

SAN FRANCISCO OAKLAND BAY BRIDGE EAST SPAN
YBI EB ON-RAMP STRUCTURE (INITIAL)
SUBSTRUCTURE FOR BENT W7 ONLY
(Bridge No. 34-0006 R)

SECTION 10. CONSTRUCTION DETAILS

SECTION 10-1. GENERAL

10-1.01 ORDER OF WORK

Order of work shall conform to the provisions in Section 5-1.05, "Order of Work," of the Standard Specifications and these special provisions.

Attention is directed to "Thermoplastic Delineation (EAS)," of these special provisions.

The first order of work shall be to install the 200-mm thermoplastic delineation (ESA) along boundaries of the paved areas of the ESA 1a and 1b, before excavation and piling work is begun.

Temporary railing (Type K) and temporary crash cushions shall be secured in place prior to commencing work for which the temporary railing and crash cushions are required.

Attention is directed to "Replace Concrete Pavement (Rapid Strength Concrete)" of these special provisions in regards to providing Pre-Operation Conference and the Just-In-Time Training prior to commencing pavement replacement operations.

Attention is directed to "Environmentally Sensitive Area (General)"of these special provisions. Prior to beginning work, the boundaries of the Environmentally Sensitive Areas (ESA) shall be clearly delineated in the field. The boundaries shall be delineated by the installation of temporary fence (Type ESA).

Attention is directed to "Water Pollution Control" of these special provisions for an amendment to the Storm Water Pollution Prevention Plan Preparation, which is required for the scope of work for the Contract Change Order, prior to performing work having potential to cause water pollution.

Not less than 60 days prior to applying seeds, the Contractor shall furnish the Engineer a statement from the vendor that the order for the seed required for this contract has been received and accepted by the vendor. The statement from the vendor shall include the names and quantity of seed ordered and the anticipated date of delivery.

10-1.02 WATER POLLUTION CONTROL

The Contractor shall fully comply with "Water Pollution Control," of the contract special provisions for the Contract 04-0120R4 for preparation of an amendment to the existing Storm Water Pollution Prevention Plan (SWPPP) and amending the Sampling and Analysis Plan (SAP) to cover the scope of work for the Contract Change Order.

Attention is directed to "Retention of Funds", "SWPPP Implementation", "Maintenance", "Reporting Requirements", "Sampling and Analytical Requirements" within "Water Pollution Control," of the contract special provisions for the Contract 04-0120R4.

The SWPPP amendment shall conform to the Section "Storm Water Pollution Prevention Plan Preparation, Approval and Amendments," of Section 10-1.02 "Water Pollution Control, of the Contract special provisions.

The Contractor shall develop a Water Pollution Control Schedule that describes the timing of grading or other work activities that could affect water pollution. The Water Pollution Control Schedule shall be updated by the Contractor to reflect changes in the Contractor's operations that would affect the necessary implementation of water pollution control practices.

The Contractor shall complete the "Construction Site BMPs Consideration Checklist" presented in the Preparation Manual and shall incorporate water pollution control practices into the SWPPP amendment. Water pollution control practices include the "Minimum Requirements" and other

Contractor-selected water pollution control practices from the "Construction Site BMPs Consideration Checklist" and the "Project-Specific Minimum Requirements" identified in the Water Pollution Control Cost Break-Down of this section.

The following contract items of work shall be incorporated into the SWPPP amendment as "Temporary Water Pollution Control Practices": Temporary Cover, Temporary Silt Fence, Temporary Drainage Inlet Protection, Temporary Concrete Washout Facility, Temporary Construction Entrance. The Contractor's attention is directed to the special provisions provided for Temporary Water Pollution Control Practices.

The following contract items of work, as shown on the project plans or as specified elsewhere in these special provisions, shall be identified in the SWPPP amendment as permanent water pollution control practices: Erosion Control Netting, and Fiber Rolls. These permanent water pollution control practices shall be constructed as specified in these special provisions, and utilized during the construction period. The Contractor shall maintain and protect the permanent water pollution control practices throughout the duration of the project and shall restore these controls to the lines, grades and condition shown on the plans prior to acceptance of the contract.

The SWPPP amendment shall include, but not be limited to, the items described in the Manuals, Permits and related information contained in the contract documents.

The Contractor shall prepare an amendment to the SWPPP when there is a change in construction activities or operations which may affect the discharge of pollutants to surface waters, ground waters, municipal storm drain systems, or when the Contractor's activities or operations violate a condition of the Permits, or when directed by the Engineer. Amendments shall identify additional water pollution control practices or revised operations, including those areas or operations not identified in the initially approved SWPPP. Amendments to the SWPPP shall be prepared and submitted for review and approval within a time approved by the Engineer, but in no case longer than the time specified for the initial submittal and review of the SWPPP. At a minimum, the SWPPP shall be amended annually and submitted to the Engineer 25 days prior to the defined rainy season.

The Contractor shall keep one copy of the approved SWPPP and approved amendments at the project site. The SWPPP shall be made available upon request by a representative of the Regional Water Quality Control Board, State Water Resources Control Board, United States Environmental Protection Agency, or the local storm water management agency. Requests by the public shall be directed to the Engineer.

COST BREAK-DOWN

The Contractor shall include a Water Pollution Control Cost Break-Down in the SWPPP amendment which itemizes the contract lump sum for water pollution control work. The Contractor shall use the Water Pollution Control Cost Break-Down provided in this section as the basis for the cost break-down submitted with the SWPPP amendment. The Contractor shall use the Water Pollution Control Cost Break-Down to identify items, quantities and values for water pollution control work, excluding Temporary Water Pollution Control Practices for which there are separate bid items. The Contractor shall be responsible for the accuracy of the quantities and values used in the cost break-down submitted with the SWPPP amendment. Partial payment for the item of water pollution control will not be made until the Water Pollution Control Cost Break-Down is approved by the Engineer.

Line items indicated in the Water Pollution Control Cost Break-Down in this section with a specified Estimated Quantity shall be considered "Project-Specific Minimum Requirements." The

Contractor shall incorporate Project-Specific Minimum Requirements with Contractor-designated quantities and values into the Water Pollution Control Cost Break-Down submitted with the SWPPP amendment.

Line items indicated in the Water Pollution Control Cost Break-Down in this section without a specified Estimated Quantity shall be considered by the Contractor for selection to meet the applicable "Minimum Requirements" as defined in the Manuals, or for other water pollution control work as identified in the "Construction Site BMPs Consideration Checklist" presented in the Preparation Manual. In the Water Pollution Control Cost Break-Down submitted with the SWPPP amendment, the Contractor shall list only those water pollution control practices selected for this Contract Change Order , including quantities and values required to complete the work for those items.

The sum of the amounts for the items of work listed in the Water Pollution Control Cost Break-Down shall be equal to the contract lump sum price bid for water pollution control. Overhead and profit, shall be considered as included in the contract lump sum price paid for this contract change order 64 work involved, including all supplements, and no additional compensation will be allowed therefor.

WATER POLLUTION CONTROL COST BREAK-DOWN

(CCO No. 64)

ITEM	ITEM DESCRIPTION	UNIT	ESTIMATED QUANTITY	VALUE	AMOUNT
SS-8	Wood Mulching	M2			
SS-9	Earth Dikes/Drainage Swales & Lined Ditches	M			
SS-10	Outlet Protection/Velocity Dissipation Devices	EA			
SS-11	Slope Drains	M			
SC-7	Street Sweeping and Vacuuming	LS			
WE-1	Wind Erosion Control	LS			
NS-3	Paving and Grinding Operations	LS			
NS-6	Illicit Connection/Illegal Discharge Detection and Reporting	LS			
NS-8	Vehicle and Equipment Cleaning	LS			
NS-9	Vehicle and Equipment Fueling	LS			
NS-10	Vehicle and Equipment Maintenance	LS			
WM-1	Material Delivery and Storage	LS			
WM-2	Material Use	LS			
WM-4	Spill Prevention and Control	LS			
WM-5	Solid Waste Management	LS			

ITEM	ITEM DESCRIPTION	UNIT	ESTIMATED QUANTITY	VALUE	AMOUNT
WM-6	Hazardous Waste Management	LS			
WM-9	Sanitary/Septic Waste Management	LS			

TOTAL _____

Adjustments in the items of work and quantities listed in the approved cost break-down shall be made when required to address amendments to the SWPPP, except when the adjusted items are paid for as extra work.

No adjustment in compensation will be made to the contract lump sum price paid for water pollution control due to differences between the quantities shown in the approved cost break-down and the quantities required to complete the work as shown on the approved SWPPP amendment. No adjustment in compensation will be made for ordered changes to correct SWPPP work resulting from the Contractor's own operations or from the Contractor's negligence.

The approved cost break-down will be used to determine partial payments during the progress of the work and as the basis for calculating the adjustment in compensation for the item of water pollution control due to increases or decreases of quantities ordered by the Engineer. When an ordered change increases or decreases the quantities of an approved cost break-down item, the adjustment in compensation will be determined in the same manner specified for increases and decreases in the quantity of a contract item of work in conformance with the provisions in Section 4-1.03B, "Increased or Decreased Quantities," of the Standard Specifications. If an ordered change requires a new item which is not on the approved cost break-down, the adjustment in compensation will be determined in the same manner specified for extra work in conformance with Section 4-1.03D, "Extra Work," of the Standard Specifications.

If requested by the Contractor and approved by the Engineer, changes to the water pollution control practices listed in the approved cost break-down, including addition of new water pollution control practices, will be allowed. Changes shall be included in the approved amendment of the SWPPP. If the requested changes result in a net cost increase to the lump sum price for water pollution control, an adjustment in compensation will be made without change to the water pollution control item. The net cost increase to the water pollution control item will be paid for as extra work as provided in Section 4-1.03D, "Extra Work," of the Standard Specifications.

PAYMENT

The contract lump sum price paid for prepare storm water pollution prevention plan amendment shall be considered as included in the contract lump sum price paid for this contract change order 64 work involved, including all supplements, for furnishing all labor, materials, tools, equipment, and incidentals for doing all the work involved in developing, preparing, obtaining approval of, revising, and amending the SWPPP, as specified in the Standard Specifications and these special provisions, as directed by the Engineer, and no additional compensation will be allowed therefor.

Attention is directed to Section 9-1.06, "Partial Payments," and Section 9-1.07, "Payment After Acceptance," of the Standard Specifications. Payments for prepare storm water pollution prevention plan will be made as follows:

A. After the SWPPP Amendment has been approved by the Engineer, 75 percent of the contract item price for prepare storm water pollution prevention plan will be included in the monthly partial payment estimate.
B. After acceptance of the contract in conformance with the provisions in Section 7-1.17, "Acceptance of Contract," of the Standard Specifications, payment for the remaining 25 percent of the contract item price for prepare storm water pollution prevention plan amendment will be made in conformance with the provisions in Section 9-1.07.

The contract lump sum price paid for water pollution control shall be considered as included in the contract lump sum price paid for this contract change order 64 work involved, including all supplements, for furnishing all labor, materials, tools, equipment, and incidentals, and for doing all the work involved in installing, constructing, removing, and disposing of water pollution control practices, including non-storm water management, and waste management and materials pollution water pollution control practices, except those for which there is a contract item of work as specified in the Standard Specifications and these special provisions, as directed by the Engineer, and no additional compensation will be allowed therefor.

Storm water sampling and analysis will be paid for as extra work as provided in Section 4-1.03D, "Extra Work," of the Standard Specifications. No payment will be made for the preparation, collection, analysis, and reporting of storm water samples required where appropriate BMPs are not implemented prior to a rain event, or if a failure of a BMP is not corrected prior to a rain event.

For items identified on the approved Water Pollution Control Cost Break-Down, the cost of maintaining the temporary water pollution control practices shall be divided equally by the State and the Contractor as follows:

Soil Stabilization

Temporary water pollution control practices except:
SS-1 Scheduling
SS-2 Preservation of Existing Vegetation

Sediment Control

Temporary water pollution control practices except:
SC-7 Street Sweeping and Vacuuming

Wind Erosion Control

No sharing of maintenance costs will be allowed.

Tracking Control

No sharing of maintenance costs will be allowed.

Non-Storm Water Management

No sharing of maintenance costs will be allowed.

Waste Management & Materials Pollution Control

No sharing of maintenance costs will be allowed.

The division of cost will be made by determining the cost of maintaining water pollution control practices in conformance with the provisions in Section 9-1.03, "Force Account Payment," of the Standard Specifications and paying to the Contractor one-half of that cost. Cleanup, repair, removal, disposal, improper installation, and replacement of water pollution control practices damaged by the Contractor's negligence, shall not be considered as included in the cost for performing maintenance.

The provisions for sharing maintenance costs shall not relieve the Contractor from the responsibility for providing appropriate maintenance on items with no shared maintenance costs.

Full compensation for non-shared maintenance costs of water pollution control practices, as specified in this section, "Water Pollution Control," shall be considered as included in the contract lump sum price paid for this contract change order 64 work involved, including all supplements, and no additional compensation will be allowed therefor.

Water pollution control practices for which there is a contract item of work, will be measured and paid for as that contract item of work.

10-1.03 NON-STORM WATER DISCHARGES

Non-storm water discharges shall conform to the requirements in Section 7-1.01G, "Water Pollution" of the Standard Specifications, "Water Pollution Control" of these special provisions, and these special provisions.

MARINE EXCAVATION DEWATERING

The discharge of floating oil or other floating materials is prohibited. Suspended solids shall be removed to the extent that deleterious bottom deposits, turbidity, and discoloration are not caused by the discharge. Turbidity shall be measured in Nephelometric Turbidity Units (NTU). The point of effluent discharge shall not cause bottom sediments or aquatic vegetation to become dislodged or disturbed.

The Contractor shall describe dewatering operation in the Dewatering Plan as specified under "Land-Based Excavation Dewatering."

The Contractor shall monitor both the discharge and the receiving water body in conformance with the provisions in Order No. R2-2002-0011, "Waste Discharge Requirements for San Francisco-Oakland Bay Bridge East Span Seismic Safety Project (East Span Project), City and County of San Francisco and City of Oakland, Alameda County," issued by the San Francisco Bay Regional Water Quality Control Board and these special provisions. Copies of the permit are available for inspection at the Department of Transportation, Duty Senior's Desk, 111 Grand Avenue, Oakland, California, email; duty_senior_district04@dot.ca.gov, telephone (510) 286-5209 The observations made during monitoring shall include the color difference, presence of suspended material, presence of water fowl or aquatic wildlife, wind direction and velocity, tidal condition, atmospheric condition, time, and date. In addition, the Contractor shall supplement the observations with photographs. During monitoring events, the Contractor shall obtain depth-averaged turbidity, dissolved oxygen, and pH measurements for the discharge and receiving water. Depth-averaged measurements shall be obtained by taking measurements from 3 points within the water column and averaging the 3 measurements: one at 0.3 m below the surface, one at mid depth, and one at 0.3 m above the bottom. In receiving waters that are less than 1.0 meter in depth, only one measurement shall be taken at 0.3 m below the surface. All field recorded data shall be obtained and recorded in the presence of the Engineer. Only meters that are approved by the Engineer shall be used for obtaining field

measurements. The Contractor shall submit a copy of the manufacturer specifications for all measuring instruments used including the operating instructions, the calibration instructions and calibration log. All calibrations shall be done in accordance with the manufacturer's instructions and in the presence of the Engineer.

The Contractor shall conduct monitoring, at a minimum, one hour before discharge, ten minutes after initiating discharge, four hours after initiating discharge, once daily after the initial startup monitoring, and upon cessation of discharge. The receiving water turbidity, dissolved oxygen, and pH shall be measured at a location that is unaffected by the discharge at the same frequency as the discharge monitoring. The observations, turbidity, dissolved oxygen, and pH measurements shall be recorded daily in a tabular format provided within the Storm Water Pollution Prevention Plan, as described within "Water Pollution Control" of these special provisions. The daily report shall include photographs and shall be provided daily to the Engineer prior to close of business for each working day.

The following increases in natural background turbidity, pH, and dissolved oxygen of the receiving water will be allowed:

Water Quality Parameter	Water Quality Limit
Natural Background Turbidity	
0 to 49 NTU	Receiving water turbidity may be increased to 50 NTU
50 NTU and greater	10 percent incremental increase
Natural background pH	± 0.5 pH units
Natural Background Dissolved Oxygen	5 mg/L minimum

In the event that observations and measurements indicate that a discharge is having an effect on receiving water by more than allowed and the effect is confirmed by an additional measurement obtained no less than 15 minutes and no more than 1 hour after the initial measurement, the discharge activity shall immediately cease, and corrective actions undertaken to modify, repair, or replace the equipment used for the discharge. The resumption of discharge activities will be allowed upon approval of the corrective measures by the Engineer.

LAND-BASED EXCAVATION DEWATERING

This work shall include discharging water from land-based excavations including, but not limited to, excavations for pile caps or footings, piles, storm drainage systems, sanitary sewer systems, utility facilities, walls and appurtenances. These provisions shall not apply to seepage from seasonal percolation of rainwater at elevations greater than 6.0 m, except that those dewatering operations shall be described in the Dewatering Plan as specified herein. Discharges from elevations greater than 6.0 m shall be performed in conformance with Order No. R2-2002-0011, including allowable increases in natural background turbidity, pH, and dissolved oxygen, and "Water Pollution Control" of these special provisions.

Excavation dewatering shall be performed in conformance with the requirements of San Francisco - Public Utilities Commission (SF-PUC) Batch Discharge Permit and Authorization Letter issued on October 5, 2004.

The Contractor shall be fully informed of the provisions of the permit and conduct the work accordingly.

At the option of the Contractor, water removed from the excavation may be hauled off site to an appropriately licensed liquid disposal facility in accordance with Section 7-1.13, "Disposal of Material Outside the Highway Right of Way," of the Standard Specifications.

Surface runoff shall not be allowed to enter the excavation. Groundwater contaminated by the Contractor's operations, such as the use of slurry to construct cast-in-place piles, shall be treated to meet the permit requirements for discharge or removed from the site to an appropriately licensed liquid disposal facility in accordance with Section 7-1.13, "Disposal of Material Outside the Highway Right of Way," of the Standard Specifications.

Based on the material type and groundwater gradients within the project limits, it is expected that the groundwater flow rate will be up to 180.0 L/minute. The treatment facility shall be designed to accommodate this flow rate. Continuous pumping from well points outside the excavations will not be allowed. The Contractor shall use construction methods that prevent cross-contamination of water-bearing zones caused by the flow of contaminated groundwater into piling excavations including, but not limited to, sheet piling, pipe pile extensions, and casing or shells. Seal course and cofferdams shall be used to control water in conformance with the provisions of Section 19-3.04, "Water Control and Foundation Treatment," of the Standard Specifications from "WD1" 52+40 to "WD1" 54+80 when groundwater is to be encountered. A meter that has been approved by the Engineer shall be used to measure all excavation discharges.

Treated groundwater shall be used for dust control up to the extent that sheet flow or ponding becomes imminent. When further use of the treated water as dust control would result in sheet flow or ponding, the water shall be discharged at an approved dedicated discharge point.

Analysis results of grab samples from groundwater within the limits of the project are summarized in the following table:

GROUNDWATER CONTAMINANT SUMMARY

Sample ID.	W5LC	EB6R	EB7R
Metals			
Antimony	0.010		
Arsenic	0.22		
Barium	2.5		
Beryllium	<0.0030		
Cadmium	<0.0030		
Chromium	1.2		
Cobalt	0.34		
Copper	0.27		
Lead	0.10		
Mercury	<0.0040		
Molybdenum	<0.0050		
Nickel	1.4		
Selenium	<0.0050		
Silver	<0.0030		
Thallium	<0.0050		
Vanadium	0.66		
Zinc	0.71		
VOCs	Benzene = 0.00088 M,p-Xylene = 0.00080 o-Xylene = 0.0016 1,2,4-Trimethyl-benzene = 0.0063 Naphthalene = 0.039	< 0.005	< 0.005
SVOCs	2-Methyl-naphthalene = 0.068 Fluorene = 0.011 Naphthalene = 0.031 Phenanthrene = 0.011	ND	ND
TPHg	0.57	< 0.050	0.12
TPHd	13	160	1200
TPHmo	9.1		

GROUNDWATER CONTAMINANT SUMMARY (CONT.)

Sample ID.	EB8L	EB9L	EB10R	EB13L	EB14R
Metals					
Antimony				0.0093	0.010
Arsenic				0.010	0.030
Barium				0.67	1.1
Beryllium				<0.0010	<0.0010
Cadmium				<0.0030	<0.0030
Chromium				<0.0030	0.050
Cobalt				0.0036	0.010
Copper				0.040	0.29
Lead				0.14	4.1
Mercury				<0.0040	<0.0040
Molybdenum				0.010	0.010
Nickel				<0.0030	0.040
Selenium				0.0079	0.0060
Silver				0.0096	0.010
Thallium				<0.0050	<0.0050
Vanadium				0.0041	0.040
Zinc				0.21	2.4
VOCs	< 5.0			<0.005	< 0.005
SVOCs	2-Methyl-naphthalene = 13 Phenanthrene = 12	ND	ND	Phenanthrene = .093	ND
TPHg	0.3			0.33	0.48
TPHd	44	3.1	5.6	36	440
TPHmo					

Notes:
Concentrations are shown in milligrams per liter.
Sample locations are shown in the "Materials Information"
When no concentration is given, samples were not analyzed for that group of contaminants.
Abbreviations:
ND Not detected above laboratory reporting limit
VOCs Volatile Organic Compounds
SVOCs Semi-Volatile Organic Compounds
TPHg Total Petroleum Hydrocarbons as gasoline
TPHd Total Petroleum Hydrocarbons as diesel
TPHmo Total Petroleum Hydrocarbons as motor oil

The Contractor shall submit to the Engineer, as specified in "Working Drawing," of these special provisions, a Dewatering Plan that includes the following:

A. Dewatering Operation Description - written description of all dewatering operations that shall include, but is not limited to, start up date of discharge, an estimate of the discharge volume, flow rate, frequency, and maximum capacity of the treatment facility.
B. Certification of Treatment Facility Design - report describing the adequacy of (1) the process and design of the treatment facility to meet treatment objectives, (2) the startup and operation instruction manuals, (3) the treatment facility maintenance and testing program; and (4) the influent and effluent sampling locations. This certification shall be prepared and signed by an engineer who is registered as a Civil Engineer in the State of California.

C. Treatment Facility Operation and Maintenance Manual - manual of operation for the treatment facility that describes staffing and training, quality control and assurance, inspection and maintenance, monitoring, records keeping, and preventative and contingency plans for controlling accidental discharges.

D. Working Drawings - working drawings of dewatering operations showing both a sectional and plan view that details the removal techniques for suspended solids and known or introduced groundwater contaminants. The drawings shall define the flow path and placement of pipes, hoses, pumps, treatment systems, holding tanks, and other equipment used to convey the discharge; the general position of the dewatering measures relative to the excavations undergoing dewatering; and the point of effluent discharge.

The plan shall be submitted 25 working days before beginning dewatering operations for review and approval by the Engineer. Excavation operations that require dewatering will not be allowed until the plan has been approved by the Engineer. At the time of approval, the Contractor shall incorporate the dewatering plan into the approved SWPPP via the established amendment process as described within "Water Pollution Control" of these special provisions.

Monitoring of discharges shall conform to the requirements of the SF-PUC Batch Discharge Permit and Authorization Letter and these special provisions.

In addition to the monitoring requirements of the SF-PUC Batch Discharge Permit and Authorization Letter, the Contractor shall monitor the discharge for turbidity. Turbidity shall be measured in Nephelometric Turbidity Units (NTU).

In the event of a violation of the maximum daily limits or turbidity measurement greater than 50 NTU occurs and is confirmed by an additional measurement obtained no less than 15 minutes and no more than 1 hour after the initial measurement, the discharge activity shall be shutdown and corrective actions shall be taken to modify, repair, or replace the equipment used for the discharge. The resumption of discharge activities shall be allowed upon approval of the corrective measures by the Engineer.

EFFLUENT TREATMENT FACILITY

An effluent treatment facility shall be provided to treat petroleum contaminated water discharged from dewatering operations. Effluent shall be considered as the water and any other material discharged from the dewatering operations.

The Contractor shall use the effluent treatment facility to treat water from excavations before discharging to an approved discharge site in accordance with the SF-PUC Batch Discharge Permit and Authorization Letter and these special provisions.

Materials shall conform to the provisions in Section 6, "Control of Materials," Section 7-1.16, "Contractor's Responsibility for the Work and Materials," Section 20-5.03E, "Pipe," and Section 74-2, "Drainage Pump Equipment" of the Standard Specifications and these special provisions.

Holding tanks for pretreatment storage shall be transportable and totally enclosed, with a minimum holding capacity sufficient to prevent delay of other work and capable of connecting multiple tanks in series. Holding tanks shall have an inlet and outlet capable of receiving and discharging minimum flows, at a rate sufficient to reach the treatment goals. Holding tanks shall be able to accommodate temporary installation of submersible pumps. All tanks shall remain within the project limits until dewatering operations are no longer necessary as determined by the Engineer.

Granulated activated carbon (GAC) shall be used as the medium to treat groundwater contaminated with petroleum hydrocarbons as noted in the contaminant summary table. The GAC

treatment system shall be designed to meet the treatment goals specified in the SF-PUC Batch Discharge Permit and Authorization Letter. The GAC treatment vessels shall be readily removed and replaced or interchanged when required. The GAC treatment system shall have appropriate fittings for pipe connections designed to accommodate the required flow rate. Throughout the operation, the Contractor shall have additional GAC treatment vessels available for transport and use at the site if the monitoring results indicate that the GAC treatment vessels currently in use will not continue to meet the treatment goals of the SF-PUC Batch Discharge Permit and Authorization Letter. Pretreatment of the groundwater to prevent sediment build up within the GAC treatment vessels shall be provided when necessary.

Sampling ports shall be spigots attached to the piping system and capable of obtaining a representative sample of water at locations within the effluent treatment facility where constituent concentrations are needed to ensure compliance with the SF-PUC Batch Discharge Permit and Authorization Letter and to inspect the efficiency of the facility. The effluent treatment facility shall be capable of sustaining temporary fluctuations in water pressure due to monitoring activities.

Pumps shall be capable of being submerged in water and discharging water and other materials including, but not limited to small rocks, gravel, sand and sediments. The submersible pumps shall be capable, at all times, of discharging at a flow rate that will match the flow rate through the GAC vessels. An additional submersible pump shall be provided by the Contractor that is capable of discharging treated effluent from a temporary holding container to the dedicated discharge location.

The Contractor shall be responsible for providing and installing all piping required to circulate the effluent through the treatment facility and all piping required to convey the treated effluent from the temporary holding container to the point of release at the dedicated discharge location.

A holding tank shall be provided between the GAC treatment system outlet and the discharge location with a minimum storage capacity of 1800 L. The holding container shall have an inlet and outlet capable of receiving and discharging minimum flows that can match the flow rate through the GAC vessels. The holding container shall be open to the air and sealed on all sides and the bottom to prevent any leakage.

Sediments removed during maintenance of the treatment facility shall be characterized by laboratory analysis before disposal. Contaminated sediments shall be removed from the site to an appropriately licensed waste management facility in accordance with Section 7-1.13, "Disposal of Material Outside the Highway Right of Way," of the Standard Specifications. Disposal of contaminated sediments, as determined by analysis, will be paid for as extra work as provided in Section 4-1.03D of the Standard Specifications.

INSPECTION

The Contractor shall conduct a daily inspection of the dewatering equipment, when in use, and ensure that all components are functional and routinely maintained to prevent leakage before removal of suspended solids and petroleum hydrocarbons. If any component of the dewatering equipment is damaged so that the performance of the equipment is diminished below allowable operational levels, the dewatering operation shall be discontinued and the component shall be repaired or replaced with substitute equipment.

SPILL CONTINGENCY

The Contractor shall prepare and submit to the Engineer a contingency plan for the management of spills or leaks of any materials or wastes that may impact the water quality of the San Francisco Bay.

The spill contingency plan shall be incorporated within the SWPPP, as specified in "Water Pollution Control (Storm Water Pollution Prevention Plan)" of these special provisions.

The contingency plan shall include instructions and procedures for reporting spills, and a list of spill containment and collection materials and equipment to be maintained onsite. The contingency plan shall be reviewed and updated quarterly.

LIQUIDS, RESIDUES AND DEBRIS

The Contractor shall prevent the discharge of slurries, liquids, residues, or debris produced during the work to storm water facilities or surface waters of the State. The SWPPP shall, at a minimum, depict and describe the procedural and structural methods of containing, collecting, and disposing of all slurries, liquids, residues, and debris associated with the operations. Sufficient redundancy shall be incorporated into the procedural and structural methods such that the slurries, liquids, residues, and debris are not conveyed into or become present in drainage systems, San Francisco Bay, or other water bodies.

PAYMENT

The contract lump sum price paid for non-storm water shall be considered as included in the contract lump sum price paid for this contract change order 64 work involved, including all supplements, for furnishing all labor, materials, tools, equipment, and incidentals and for doing all the work involved in non-storm water discharges, complete in place, as shown on the plans, as specified in the Standard Specifications, and these special provisions, and as directed by the Engineer.

10-1.04 TEMPORARY DRAINAGE INLET PROTECTION

Temporary drainage inlet protection shall be constructed, maintained, and removed from all drainage inlets exposed to construction activity and at the locations shown on the approved Storm Water Pollution Prevention Plan (SWPPP) in accordance with "Water Pollution Control" of these special provisions, and in accordance with the details shown on the plans and these special provisions.

Temporary drainage inlet protection shall be one of the water pollution control practices for sediment control. The amendment to the SWPPP shall include the use of temporary drainage inlet protection.

The Contractor shall select the appropriate drainage inlet protection in accordance with the details to meet the conditions around the drainage inlet. Throughout the duration of the contract, the Contractor shall provide protection to meet the changing conditions around the drainage inlet.

Temporary drainage inlet protection shall be Type 1,3A,3B,4A,4B or 5.

MATERIALS

Erosion Control Blanket

The erosion control blanket shall be a rolled erosion control product (RECP) and shall be classified either as temporary and degradable or long-term and nondegradable, and shall conform to one of the following:

A. Temporary and degradable:

1. Machine produced mats consisting of curled wood excelsior with 80 percent of the fiber 150 mm or longer. The excelsior blanket shall be of consistent thickness with wood fiber evenly distributed over the entire area of the blanket. The top surface of the blanket shall be covered with an extruded photodegradable plastic netting or lightweight nonsynthetic netting. The blanket shall be smolder resistant without the use of chemical additives and shall be nontoxic and noninjurious to plant and animal life. The excelsior blanket shall be furnished in rolled strips with a minimum mass per unit area of 0.40-kg/m^2.
2. Machine produced mats consisting of 70 percent straw and 30 percent coconut fiber with an extruded photodegradable plastic netting or lightweight nonsynthetic netting on the top and bottom surfaces of the blanket. The straw and coconut shall adhere to the netting using thread or glue strip. The straw and coconut blanket shall be of consistent thickness, and straw and coconut fiber shall be evenly distributed over the entire area of the blanket. The straw and coconut fiber blanket shall be furnished in rolled strips with a minimum mass per unit area of 0.27-kg/m^2.
3. Machine produced mats that are 100 percent coir consisting of coconut fiber with an extruded photodegradable plastic netting or lightweight nonsynthetic netting on the top and bottom surfaces of the blanket. The coconut fiber shall adhere to the netting using thread or glue strip. The coconut blanket shall be of consistent thickness, with coconut fiber evenly distributed over the entire area of the blanket. The coconut fiber blanket shall be furnished in rolled strips with a minimum mass per unit area of 0.27-kg/m^2.
4. Machine woven netting that is 100 percent spun coir consisting of coconut fiber with an average open area of 63 percent to 70 percent. Coconut coir netting shall be furnished in rolled strips with a minimum mass per unit area of 0.40-kg/m^2.

B. Long-term and nondegradable:

1. Geotextile blanket shall conform to the provisions for rock slope protection fabric (Type A) in Section 88-1.04, "Rock Slope Protection Fabric," of the Standard Specifications.

Staples

Staples shall be as shown on the plans. An alternative attachment device such as geotextile pins or plastic pegs may be used instead of staples. The Contractor shall submit a sample of the alternative attachment device for the Engineer's approval before installation.

Rocks

Rocks shall conform to the requirements in Section 72-2.02, "Materials," of the Standard Specifications except that grading shall conform to the following sizes:

Square Screen Size (mm)	Percentage Passing	Percentage Retained
150	100	0
75	0	100

Fiber Roll

A fiber roll shall be one of the following:

A. Constructed with a premanufactured blanket made of one material or a combination of materials consisting of wood excelsior, rice or wheat straw, or coconut fibers. The blanket shall be between 2.0 m and 2.4 m in width and between 20 m and 29 m in length. Wood excelsior shall be individual fibers, of which 80 percent shall be 150 mm or longer in length. The blanket shall have a photodegradable plastic netting or biodegradable jute, sisal, or coir fiber netting on at least one side. The blanket shall be rolled along the width and secured with jute twine spaced 2 m apart along the full length of the roll and placed 150 mm from the ends of each roll. The finished roll shall be between 200 mm and 250 mm in diameter, between 3 m and 6 m in length, and shall weigh at least 0.81-kg/m. More than one blanket may be required to achieve the finished roll diameter. When more than one blanket is required, blankets shall be jointed longitudinally with an overlap of 150 mm along the length of the blanket.

B. A premanufactured roll of rice or wheat straw, wood excelsior, or coconut fiber encapsulated within a photodegradable plastic or biodegradable jute, sisal, or coir fiber netting. The rolls shall be between 200 mm and 250 mm in diameter, between 3 m and 6 m in length, and shall weigh at least 1.6 kg/m. The netting shall have a minimum durability of one year after installation. The netting shall be secured tightly at each end of the roll.

Wood Stakes

Wood stakes shall be a minimum of 19 mm x 19 mm x 450 mm in size for Type 1 installation, or shall be a minimum of 19 mm x 38 mm x 450 mm in size for Type 2 installation. Wood stakes shall be untreated fir, redwood, cedar, or pine and cut from sound timber. They shall be straight and free of loose or unsound knots and other defects which would render them unfit for the purpose intended.

Rope

Rope shall be biodegradable, such as sisal or manila, with a minimum diameter of 6.35 mm.

Gravel-filled Bags

Gravel-filled bag fabric shall be nonwoven polypropylene geotextile or polymer material and shall conform to the following requirements:

Specification	Requirements
Mass per unit area, grams per square meter, minimum. ASTM Designation: D 5261	270
Grab tensile strength (25-mm grip), kilonewtons, minimum. ASTM Designation: D4632*	0.89
Ultraviolet stability, percent tensile strength retained after 500 hours, ASTM Designation: D4355, xenon arc lamp method	70

* or appropriate test method for specific polymer

Gravel-filled bags shall be between 600 mm and 800 mm in length, and between 400 mm and 500 mm in width.

Yarn used for binding gravel bags shall be as recommended by the manufacturer or bag supplier and shall be of a contrasting color.

Gravel shall be between 10 mm and 20 mm in diameter, and shall be clean and free from clay balls, organic matter, and other deleterious materials. The opening of gravel-filled bags shall be secured to prevent gravel from escaping. Gravel-filled bags shall be between 13 kg and 22 kg in mass.

Silt Fence

At the Contractor's option, temporary silt fence shall be prefabricated or constructed with silt fence fabric, posts, and fasteners.

Silt fence fabric shall conform to the following requirements:

Specification	Requirements
Width, mm, min.	900
Grab tensile strength (25-mm grip), kilonewtons, minimum. in each direction ASTM Designation: D 4632 or appropriate test method for specific polymer	0.55
Elongation, percent minimum in each direction ASTM Designation: D 4632 or appropriate test method for specific polymer	15
Permittivity, 1/sec., minimum. ASTM Designation: D 4491	1.5
Flow rate, liters per minute per square meter, minimum. ASTM Designation: D 4491	400
Ultraviolet stability, percent tensile strength retained after 500 hours, minimum. ASTM Designation: D 4355 (xenon-arc lamp and water spray weathering method)	70

Silt fence fabric shall be geotextile manufactured from woven polypropylene or polymer material. Silt fence fabric may be made of recycled materials. No materials shall contain biodegradable filler materials that can degrade the physical or chemical characteristics of the finished fabric. The Engineer may order tests to confirm the absence of biodegradable filler materials in conformance to the requirements in ASTM Designation: E 204.

Posts for temporary silt fences shall be one of the following:

A. Posts shall be untreated fir, redwood, cedar, or pine, shall be cut from sound timber, and shall be straight and free of loose or unsound knots and other defects which would render them unfit for the purpose intended. Wood post shall be a minimum of 34 mm x 40 mm in size, and 4 feet in length. The end of the post to be embedded in the soil shall be pointed.

B. Posts shall be steel and have a "U," "T," "L," or other cross sectional shape that can resist failure from lateral loads. The steel posts shall have a minimum mass per length of 1.1 kg/m and a minimum length of 1.2 m. One end of the steel posts shall be pointed and the other end shall be capped with an orange or red plastic safety cap which fits snugly to the steel post. The Contractor shall submit to the Engineer for approval a sample of the capped steel post before installation.

Fasteners for attaching silt fence fabric to posts shall be as follows:

A. When prefabricated silt fence is used, posts shall be inserted into sewn pockets.
B. Silt fence fabric shall be attached to wooden posts with nails or staples as shown on the plans or as recommended by the manufacturer or supplier. Tie wire or locking plastic fasteners shall be used to fasten the silt fence fabric to steel posts. Maximum spacing of fasteners shall be 200 mm along the length of the steel post.

Foam Barriers

The foam barrier fabric cover and skirt shall be a woven polypropylene fabric with a minimum tensile strength of 0.44-kN, conforming to ASTM Designation: D 4632. The prefabricated fabric shall be high visibility orange in color that is integral to the fabric; painting shall not be allowed. The fabric shall have an ultraviolet stability exceeding 70 percent.

The foam core shall be urethane foam and shall be shaped and dimensioned as shown on the plans.

Adhesive for foam barriers shall be a solvent-free rubber modified asphalt emulsion. The color of the emulsion shall be brown when wet and shall have a drying period of not more than 3 hours.

Anchoring nails or spikes for foam barriers shall be a minimum of 25 mm in length and capable of penetrating concrete or asphalt surfaces.

Sediment Filter Bag

Sediment filter bag fabric shall be geotextile manufactured from woven polypropylene or polymer material. Sediment filter bag fabric may be made from recycled polymer materials. Polymer materials shall not contain biodegradable filler materials and shall conform to the requirements in ASTM Designation: E 204.

Sediment filter bag fabric shall conform to the following requirements:

Specification	Requirements
Grab tensile strength (25-mm grip), kilonewtons, minimum. in each direction ASTM Designation: D 4632 or appropriate test method for specific polymer	1.35
Elongation, percent minimum in each direction ASTM Designation: D 4632 or appropriate test method for specific polymer	15
Permittivity, 1/sec., minimum. ASTM Designation: D 4491	1.5
Flow rate, liters per minute per square meter, minimum. ASTM Designation: D 4491	8140
Ultraviolet stability, percent tensile strength retained after 500 hours, minimum. ASTM Designation: D 4355 (xenon-arc lamp and water spray weathering method)	80

The sediment filter bag shall be sized to fit the catch basin or drainage inlet and shall be complete with lifting loops and dump straps attached at the bottom to facilitate emptying of the sediment filter bag. The sediment filter bags shall have a restraint cord approximately halfway up the bag to keep the sides away from the catch basin walls.

INSTALLATION

Temporary drainage inlet protection shall be installed at drainage inlets in paved and unpaved areas as follows:

A. Temporary drainage inlet protection shall be installed such that ponded runoff does not encroach on the traveled way or overtop the curb or dike. Gravel-filled bags shall be placed to control ponding and prevent runoff from overtopping the curb or dike.
B. The bedding area for the temporary drainage inlet protection shall be cleared of obstructions including rocks, clods, and debris greater than 25 mm in diameter before installation.
C. A temporary linear sediment barrier shall be installed up-slope of the existing drainage inlet and parallel with the curb, dike, or flow line to prevent sediment from entering the drainage inlet.

Erosion Control Blanket and Geotextile Fabric

The erosion control blanket and geotextile fabric shall be secured to the surface of the excavated sediment trap with staples and embedded in a trench adjacent to the drainage inlet. The perimeter edge of the erosion control blanket and geotextile fabric shall be anchored in a trench.

Silt Fence

Silt fence shall be installed along the perimeter of the erosion control blanket or geotextile fabric, with the posts facing the drainage inlet. The trench shall be backfilled and tamped to secure the silt fence fabric in the bottom of the trench.

Gravel-filled Bags

Gravel-filled bags shall be stacked to form a gravel bag barrier. The gravel-filled bags shall be placed so that the bags are tightly abutted and overlap the joints in adjacent rows. A spillway shall be created by removing one or more gravel-filled bags from the upper layer of the gravel bag barrier.

Gravel-filled bags shall only be use within shoulder areas when placed behind temporary railing (Type K).

Fiber Rolls

Fiber rolls shall be placed over the erosion control blanket or geotextile fabric with the ends of the fiber roll abutted tightly together. Fiber rolls shall be secured with stakes installed along the length of the fiber rolls. Stakes shall not be installed within 300 mm of the end of the rolls.

Foam Barriers

Foam barriers shall be installed in individual sections adjacent to existing drainage inlets. Foam barriers shall be securely attached to the pavement according to the angle and spacing shown on the plans. Foam barriers shall be installed flush against the sides of concrete or asphalt concrete curbs,

dikes, and pavement with the inner material and fabric cover cut smoothly and evenly to provide a tight flush joint.

Sediment Filter Bags

Sediment filter bags shall be installed by removing the drainage inlet grate, placing the sediment bag in the opening, and replacing the grate to secure the sediment filter bag in place.

MAINTENANCE

Temporary drainage inlet protection shall be maintained to provide sediment holding capacity and to reduce runoff velocities. Temporary drainage inlet protection shall be repaired or replaced immediately after the damage occurs.

Sediment deposits, trash, and debris shall be removed from temporary drainage inlet protection as needed or when directed by the Engineer. Removed sediment shall be deposited within the project limits so that the sediment is not subject to erosion by wind or by water. Trash and debris shall be removed and disposed of in accordance with the provisions in Section 7-1.13, "Disposal of Material Outside the Highway Right of Way," of the Standard Specifications.

At locations where rills and other evidence of concentrated runoff have occurred beneath the drainage inlet protection, the protection shall be adjusted to prevent another occurrence.

Temporary silt fence shall be repaired or replaced when silt fence fabric becomes split, torn, or unraveled. Sagging or slumping silt fence shall be repaired with additional stakes or replaced. Broken or split stakes shall be replaced. Temporary silt fence shall be maintained to provide a sediment holding capacity of approximately 1/3 the height of the silt fence fabric above ground.

Sediment in excess of 50 mm above the surface of the erosion control blanket or geotextile fabric shall be removed.

Sediment deposits shall be removed when the deposit is 1/3 the height of the gravel bag barrier or one half the height of the spillway; whichever is less.

Gravel-filled bags shall be replaced when the bag material ruptures or when the binding fails.

Split, torn, unraveling, sagging, or slumping fiber rolls shall be replaced or repaired.

Foam barriers shall be repaired or replaced when the geotextile fabric cover becomes split, torn, or unraveled. Foam barriers that become detached or dislodged shall be reattached to the pavement. Sediment deposits shall be removed when the deposit reaches 1/3 of the foam barrier height.

Sediment filter bags shall be emptied when the restraint cords are no longer visible. Sediment filter bags shall be emptied by placing 25 mm steel reinforcing bars through the lifting loops. The bag shall be emptied of its contents and rinsed before replacement in the drainage inlet.

REMOVAL

When the temporary drainage inlet protection is no longer required the protection materials shall be removed and disposed of in accordance with the provisions in Section 7-1.13, "Disposal of Material Outside the Highway Right of Way," of the Standard Specifications.

Holes, depressions, or other ground disturbance caused by the removal of the temporary drainage inlet protection shall be backfilled and repaired in accordance with the provisions in Section 15-1.02, "Preservation of Property," of the Standard Specifications.

MEASUREMENT

Quantities of temporary drainage inlet protection will be determined from actual count in place. The protection will be measured one time only and no additional measurement will be recognized.

PAYMENT

The contract unit price paid for temporary drainage inlet protection shall include full compensation for furnishing all labor, materials, tools, equipment, and incidentals, and for doing all the work involved in constructing the temporary drainage inlet protection, complete in place, including maintenance, removal of materials, including cleanup and disposal of retained sediment and debris, and backfilling and repairing holes, depressions and other ground disturbance, as shown on the plans, as specified in the Standard Specifications and these special provisions, and as directed by the Engineer.

No additional compensation will be made if the temporary drainage inlet protection changes during the course of construction.

10-1.05 TEMPORARY COVER

Temporary cover shall be furnished, installed, maintained, and later removed at the locations shown on the approved Storm Water Pollution Prevention Plan in conformance with "Water Pollution Control" of these special provisions, and in conformance with details shown on the plans and these special provisions.

Temporary cover shall be one of the water pollution control practices for soil stabilization. The Storm Water Pollution Prevention Plan shall include the use of temporary cover.

MATERIALS

Temporary Cover Fabric

Temporary cover fabric shall be either a geotextile (engineering fabric) or a geomembrane (plastic sheeting) conforming to the following requirements:

A. Geotextile shall be a woven, slit film fabric which is also known as woven tape. The fabric shall be nonbiodegradable, resistant to deterioration by sunlight, and inert to most soil chemicals. Edges of the film fabric shall be selvage or serge to prevent unraveling. The film fabric shall also conform to the following requirements:

Specification	Requirements
Grab tensile strength (25-mm grip), kilonewtons, min. ASTM Designation: D4632*	0.89
Elongation at break, percent min. ASTM Designation: D4632*	15
Toughness, kilonewtons, min. (percent elongation x grab tensile strength)	13.3
Permittivity, 1/sec, max. (liters per minute per square meter) ASTM Designation: D 4491	0.08 (244)
Ultraviolet light stability, percent tensile strength retained after 500 hours, min. ASTM Designation: D 4355 (xenon arc lamp method)	70

* or appropriate test method for specific polymer

B. The geomembrane shall consist of 0.25-mm thick, single-ply material in conformance with the requirements in ASTM Designation: D 5199.

Temporary cover fabric shall be manufactured from polyethylene, polypropylene, or comparable polymers. The polymer materials may be virgin, recycled, or a combination of virgin and recycled materials. The polymer materials shall not contain biodegradable filler materials that can degrade the physical or chemical characteristics of the finished fabric. The Engineer may order tests to confirm the absence of biodegradable filler materials in conformance with the requirements in ASTM Designation: E 204 (Fourier Transformed Infrared Spectroscopy-FTIR).

Restrainers

Restrainers for securing the temporary cover fabric on slopes and stockpiles shall consist of one or a combination of the following:

A. Gravel-filled bags used as restrainers shall be knotted, roped, and placed at a maximum of 2 m apart on the temporary cover fabric as shown on the plans. Gravel-filled bags shall be between 13 kg and 22 kg in mass, between 600 mm and 800 mm in length, and between 400 mm and 500 mm in width. Gravel bag fabric shall be nonwoven polypropylene geotextile with a minimum unit weight of 270 g/m^2. The fabric shall have a minimum grab tensile strength (25-mm grip) of 0.89-kN in conformance with the requirements in ASTM Designation: D 4632, and an ultraviolet (UV) stability of 70 percent tensile strength retained after 500 hours in conformance with the requirements in ASTM Designation: D 4355, xenon arc lamp method. Gravel shall consist of noncohesive material between 10 mm and 20 mm in diameter, free of clay balls, organic matter, and other deleterious material. The openings of gravel-filled bags shall be secured to prevent escape of gravel.
B. Restrainers consisting of a steel anchor with a wooden lath shall be fabricated and placed as shown on the plans. Wooden lath shall conform to the provisions in Section 20-2.12, "Lumber," of the Standard Specifications and shall be fir or pine, 38 mm x 89 mm in size, and 2.4 m in length. The wooden lath shall be secured to the temporary cover with steel anchors placed 1.2 m apart along the lath.

The Contractor may use an alternative restrainer if approved by the Engineer in writing. The Contractor shall submit details for an alternative restrainer to the Engineer prior to installation. The alternative restrainer shall be installed and maintained in conformance with these special provisions.

INSTALLATION

Temporary cover shall be installed as follows:

A. Temporary cover fabric shall be placed and anchored as shown on the plans.
B. Abutting edges of the temporary cover fabric shall overlap a minimum of 600 mm. Nonabutting edges shall be embedded in the soil a minimum of 150 mm.
C. Restrainers shall be placed at the overlap area and along the toe of the slope. Restrainers outside the overlap areas shall be placed at a maximum spacing of 2.4 m.
D. Steel anchors shall be installed to allow the leg of the steel anchor to pierce through the temporary cover fabric into the slope with the crown section securing the wooden lath firmly against the slope.
E. Earthen berm, a linear sediment barrier, shall be constructed adjacent to the toe of the slope with a minimum height of 200 mm and a minimum width of 940 mm. The earthen berm shall be hand or mechanically compacted. Alternative linear sediment barrier may be used at the Contractor's expense if approved by the Engineer in writing.

If the Contractor removes the temporary cover in order to facilitate other work, the temporary cover shall be replaced and secured at the Contractor's expense.

When no longer required as determined by the Engineer, temporary cover shall become the property of the Contractor and be removed and disposed of in conformance with the provisions in Section 7-1.13, "Disposal of Material Outside the Highway Right of Way," of the Standard Specifications.

Ground disturbances, including holes and depressions, caused by the installation and removal of the temporary cover shall be backfilled and repaired in conformance with the provisions in Section 15-1.02, "Preservation of Property," of the Standard Specifications.

MAINTENANCE

The Contractor shall maintain the temporary cover throughout the contract to prevent displacement or migration of the material on the slope or stockpiled.

Temporary cover shall be maintained to minimize exposure of the protected area. Restrainers shall be relocated and secured as needed to restrain the temporary cover fabric in place. Temporary cover that breaks free shall be immediately secured. Holes, tears, and voids in the temporary cover fabric shall be patched, repaired, or replaced. When patches or repairs are unacceptable as determined by the Engineer, the temporary cover shall be replaced.

Temporary cover shall be repaired or replaced on the same day when the damage occurs. Damage to the temporary cover resulting from the Contractor's vehicles, equipment, or operations shall be repaired at the Contractor's expense.

MEASUREMENT AND PAYMENT

The quantity of temporary cover to be paid for will be measured by the square meter for the actual area covered.

The contract price paid per square meter for temporary cover shall include full compensation for furnishing all labor, materials, tools, equipment, and incidentals, and for doing all the work involved in installing temporary cover, complete in place, including trench excavation and backfill, maintenance, and removal of temporary cover, as shown on the plans, as specified in the Standard Specifications and these special provisions, and as directed by the Engineer.

10-1.06 TEMPORARY CONCRETE WASHOUT FACILITY

Temporary concrete washout facilities shall be constructed, maintained, and later removed at the locations shown on the approved Storm Water Pollution Prevention Plan in conformance with "Water Pollution Control" of these special provisions, and in conformance with details shown on the plans and these special provisions.

Temporary concrete washout facilities shall be one of the water pollution control practices for waste management and materials pollution control. The Storm Water Pollution Prevention Plan shall include the use of temporary concrete washout facilities.

MATERIALS

Plastic Liner

Plastic liners shall be single ply, new polyethylene sheeting, a minimum of 0.25-mm thick and shall be free of holes, punctures, tears or other defects that compromise the impermeability of the material. Plastic liners shall not have seams or overlapping joints.

Gravel-filled Bags

Gravel bag fabric shall be nonwoven polypropylene geotextile (or comparable polymer) and shall conform to the following requirements:

Specification	Requirements
Mass per unit area, grams per square meter, min. ASTM Designation: D 5261	270
Grab tensile strength (25-mm grip), kilonewtons, min. ASTM Designation: D4632*	0.89
Ultraviolet stability, percent tensile strength retained after 500 hours, ASTM Designation: D4355, xenon arc lamp method	70

* or appropriate test method for specific polymer

Gravel bags shall be between 600 mm and 800 mm in length, and between 400 mm and 500 mm in width.

Yarn used for binding gravel bags shall be as recommended by the manufacturer or bag supplier and shall be of a contrasting color.

Gravel shall be between 10 mm and 20 mm in diameter, and shall be clean and free from clay balls, organic matter, and other deleterious materials.

The opening of gravel-filled bags shall be secured to prevent gravel from escaping. Gravel-filled bags shall be between 13 kg and 22 kg in mass.

Straw Bales

Straw for straw bales shall conform to the provisions in Section 20-2.06, "Straw," of the Standard Specifications.

Straw bales shall be a minimum of 360 mm in width, 450 mm in height, 900 mm in length and shall have a minimum mass of 23 kg. The straw bale shall be composed entirely of vegetative matter, except for binding material.

Straw bales shall be bound by either wire, nylon or polypropylene string. Jute or cotton binding shall not be used. Baling wire shall be a minimum 1.57 mm in diameter. Nylon or polypropylene string shall be approximately 2 mm in diameter with 360 N of breaking strength.

Stakes

Stakes shall be wood or metal. Wood stakes shall be untreated fir, redwood, cedar, or pine and cut from sound timber. They shall be straight and free of loose or unsound knots or other defects which would render them unfit for the purpose intended. Wood stakes shall be a minimum 50 mm x 50 mm in size. Metal stakes may be used as an alternative, and shall be a minimum 13 mm in diameter. Stakes shall be a minimum 1.2 m in length. The tops of the metal stakes shall be bent at a 90-degree angle or capped with an orange or red plastic safety cap that fits snugly to the metal stake. The Contractor shall submit a sample of the metal stake and plastic cap, if used, for the Engineer's approval prior to installation.

Staples

Staples shall be as shown on the plans. An alternative attachment device such as geotextile pins or plastic pegs may be used instead of staples. The Contractor shall submit a sample of the alternative attachment device for the Engineer's approval prior to installation.

Signs

Wood posts for signs shall conform to the provisions in Section 56-2.02B, "Wood Posts," of the Standard Specifications. Lag screws shall conform to the provisions in Section 56-2.02D, "Sign Panel Fastening Hardware," of the Standard Specifications.

Plywood shall be freshly painted for each installation with not less than 2 applications of flat white paint. Sign letters shown on the plans shall be stenciled with commercial quality exterior black paint. Testing of paint will not be required.

INSTALLATION

Temporary concrete washout facilities shall be as follows:

A. Temporary concrete washout facilities shall be installed prior to beginning placement of concrete and located a minimum of 15 m from storm drain inlets, open drainage facilities, and water courses unless determined infeasible by the Engineer. Temporary concrete washout facilities shall be located away from construction traffic or access areas at a location determined by the Contractor and approved by the Engineer.

B. A sign shall be installed adjacent to each washout facility at a location determined by the Contractor and approved by the Engineer. Signs shall be installed in conformance with the provisions in Section 56-2.03, "Construction," and Section 56-2.04, "Sign Panel Installation," of the Standard Specifications.

C. The length and width of a temporary concrete washout facility may be increased from the minimum dimensions shown on the plans, at the Contractor's expense and upon approval of the Engineer.

D. Temporary concrete washout facilities shall be constructed in sufficient quantity and size to contain liquid and concrete waste generated by washout operations for concrete wastes. These facilities shall be constructed to contain liquid and concrete waste without seepage, spills, or overflow.
E. Berms for below grade temporary concrete washout facilities shall be constructed from compacted native material. Gravel may be used in conjunction with compacted native material.
F. A plastic liner shall be installed in below grade temporary concrete washout facilities.

Details for an alternative temporary concrete washout facility shall be submitted to the Engineer for approval at least 7 days prior to installation.

When temporary concrete washout facilities are no longer required for the work, as determined by the Engineer, the hardened concrete and liquid residue shall be removed and disposed of in conformance with the provisions in Section 15-3.02, "Removal Methods," of the Standard Specifications. Temporary concrete washout facilities shall be disposed of in conformance with the provisions in Section 7-1.13, "Disposal of Material Outside the Highway Right of Way," of the Standard Specifications.

Ground disturbance, including holes and depressions, caused by the installation and removal of the temporary concrete washout facilities shall be backfilled and repaired in conformance with the provisions in Section 15-1.02, "Preservation of Property," of the Standard Specifications.

MAINTENANCE

Temporary concrete washout facilities shall be maintained to provide adequate holding capacity with a minimum freeboard of 300 mm. Maintaining temporary concrete washout facilities shall include removing and disposing of hardened concrete and returning the facilities to a functional condition. Hardened concrete materials shall be removed and disposed of in conformance with the provisions in Section 15-3.02, "Removal Methods," of the Standard Specifications. Holes, rips, and voids in the plastic liner shall be patched and repaired by taping or the plastic liner shall be replaced. The plastic liner shall be replaced when patches or repairs compromise the impermeability of the material as determined by the Engineer.

Gravel bags shall be replaced when the bag material is ruptured or when the yarn has failed, allowing the bag contents to spill out.

Temporary concrete washout facilities shall be repaired or replaced on the same day the damage occurs. Damage to temporary concrete washout facilities resulting from the Contractor's vehicles, equipment, or operations shall be repaired at the Contractor's expense.

MEASUREMENT AND PAYMENT

Quantities of temporary concrete washout facilities will be measured as units determined from actual count in place.

The contract unit price paid for temporary concrete washout facility shall include full compensation for furnishing all labor, materials, tools, equipment and incidentals, and for doing all the work involved in constructing a temporary concrete washout facility, complete in place, including excavation and backfill, maintenance, and removal, as shown on the plans, as specified in the Standard Specifications and these special provisions, and as directed by the Engineer.

10-1.07 TEMPORARY SILT FENCE

Temporary silt fence shall be furnished, installed, maintained, and later removed at the locations shown on the approved Storm Water Pollution Prevention Plan in conformance with "Water Pollution Control" of these special provisions, and in conformance with details shown on the plans and these special provisions.

Temporary silt fence shall be one of the water pollution control practices for sediment control. The Storm Water Pollution Prevention Plan shall include the use of temporary silt fence.

MATERIALS

At the Contractor's option, temporary silt fence shall be prefabricated or constructed with silt fence fabric, posts, and fasteners.

Silt Fence Fabric

Silt fence fabric shall be geotextile manufactured from woven polypropylene or polymer material. Silt fence fabric may be virgin, recycled, or a combination of virgin and recycled polymer materials. No virgin or recycled polymer materials shall contain biodegradable filler materials that can degrade the physical or chemical characteristics of the finished fabric. The Engineer may order tests to confirm the absence of biodegradable filler materials in conformance to the requirements in ASTM Designation: E 204 (Fourier Transformed Infrared Spectroscopy-FTIR).

Silt fence fabric shall conform to the following requirements:

Specification	Requirements
Width, mm, min.	900
Grab tensile strength (25-mm grip), kilonewtons, min. in each direction ASTM Designation: D 4632*	0.55
Elongation, percent minimum in each direction ASTM Designation: D 4632*	15
Permittivity, 1/sec., min. ASTM Designation: D 4491	0.05
Flow rate, liters per minute per square meter, min. ASTM Designation: D 4491	400
Ultraviolet stability, percent tensile strength retained after 500 hours, min. ASTM Designation: D 4355 (xenon-arc lamp and water spray weathering method)	70

* or appropriate test method for specific polymer

Posts

Posts for temporary silt fence shall be one of the following:

A. Untreated fir or pine, a minimum of 34 mm x 40 mm in size, and 1.2 m in length. One end of the post shall be pointed.
B. Steel and have a "U," "T," "L," or other cross sectional shape that can resist failure from lateral loads. The steel posts shall have a minimum mass per length of 1.1 kg/m and a minimum length of 1.2 m. One end of the steel posts shall be pointed and the other end shall be capped with an orange or red plastic safety cap which fits snugly to the steel post. The Contractor shall submit to the Engineer for approval a sample of the capped steel post prior to installation.

Fasteners

Fasteners for attaching silt fence fabric to posts shall be as follows:

A. When prefabricated silt fence is used, posts shall be inserted into sewn pockets.
B. Silt fence fabric shall be attached to wooden posts with nails or staples as shown on the plans or as recommended by the manufacturer or supplier. Tie wire or locking plastic fasteners shall be used to fasten the silt fence fabric to steel posts. Maximum spacing of fasteners shall be 200 mm along the length of the steel post.

INSTALLATION

Temporary silt fence shall be installed parallel with the slope contour in reaches not to exceed 150 m. A reach is considered a continuous run of temporary silt fence from end to end or from an end to an opening, including joined panels. Each reach shall be constructed so that the elevation at the base of the fence does not deviate from the contour more than 1/3 of the fence height.

The silt fence fabric shall be installed on the side of the posts facing the slope. The silt fence fabric shall be anchored in a trench as shown on the plans. The trench shall be backfilled and mechanically or hand tamped to secure the silt fence fabric in the bottom of the trench.

Mechanically pushing 300 mm of the silt fence fabric vertically through the soil may be allowed if the Contractor can demonstrate to the Engineer that the silt fence fabric will not be damaged and will not slip out of the soil resulting in sediment passing under the silt fence fabric.

At the option of the Contractor, the maximum post spacing may increase to 3 m if the fence is reinforced by a wire or plastic material by prefabrication or by field installation. The field-assembled reinforced temporary silt fence shall be able to retain saturated sediment without collapsing.

Temporary silt fence shall be joined as shown on the plans. The tops of the posts shall be tied together by minimum of 2 wraps of tie wire of a minimum 1.5 mm diameter. The silt fence fabric shall be attached to the posts at the joint as specified in these special provisions.

When no longer required as determined by the Engineer, temporary silt fence shall be removed and disposed of in conformance with the provisions in Section 7-1.13, "Disposal of Material Outside the Highway Right of Way," of the Standard Specifications. Trimming the silt fence fabric and leaving it in place will not be allowed.

Ground disturbance, including holes and depressions, caused by the installation and removal of the temporary silt fence shall be backfilled and repaired in conformance with the provisions in Section 15-1.02, "Preservation of Property," of the Standard Specifications.

MAINTENANCE

Temporary silt fence shall be maintained to provide a sediment holding capacity of approximately 1/3 the height of the silt fence fabric above ground. When sediment exceeds this height or when directed by the Engineer, sediment shall be removed. The removed sediment shall be deposited within the project limits so that the sediment is not subject to erosion by wind or by water.

Temporary silt fence shall be repaired or replaced the same day the damage occurs. Damage to the temporary silt fence resulting from the Contractor's vehicles, equipment, or operations shall be repaired at the Contractor's expense.

MEASUREMENT AND PAYMENT

Quantities of temporary silt fence to be paid for will be determined by the meter, measured parallel with the ground slope along the line of the installed temporary silt fence, deducting the widths of openings.

The contract price paid per meter for temporary silt fence shall include full compensation for furnishing all labor, materials, tools, equipment, and incidentals, and for doing all the work involved in installing temporary silt fence, complete in place, including trench excavation and backfill, maintenance, and removal, as shown on the plans, as specified in the Standard Specifications and these special provisions, and as directed by the Engineer.

10-1.08 TEMPORARY CONSTRUCTION ENTRANCE

Temporary construction entrances shall be constructed, maintained, and later removed at the locations shown on the approved Storm Water Pollution Prevention Plan in conformance with "Water Pollution Control" of these special provisions, and in conformance with details shown on the plans and these special provisions.

Temporary construction entrances shall be one of the water pollution control practices for tracking control. The Storm Water Pollution Prevention Plan shall include the use of temporary construction entrances.

At the option of the Contractor, temporary construction entrances shall be Type 1 or Type 2.

MATERIALS

Temporary Entrance Fabric

Temporary entrance fabric shall be manufactured from polyester, nylon, or polypropylene material, or any combination thereof. Temporary entrance fabric shall be a nonwoven, needle-punched fabric, free of needles which may have broken off during the manufacturing process. Temporary entrance fabric shall be permeable and shall not act as a wicking agent.

Temporary entrance fabric shall be manufactured from virgin, recycled, or a combination of virgin and recycled polymer materials. No virgin or recycled materials shall contain biodegradable filler materials that can degrade the physical or chemical characteristics of the finished fabric. The Engineer may order tests to confirm the absence of biodegradable filler materials in conformance to the requirements in ASTM Designation: E 204 (Fourier Transformed Infrared Spectroscopy-FTIR).

Temporary entrance fabric shall conform to the following requirements:

Specification	Requirements
Mass per unit area, grams per square meter, min. ASTM Designation: D 5261	235
Grab tensile strength (25-mm grip), kilonewtons, min. ASTM Designation: D4632*	0.89
Elongation at break, percent min. ASTM Designation: D4632*	50
Toughness, kilonewtons, min. (percent elongation x grab tensile strength)	53

* or appropriate test method for specific polymer

Rocks

Rocks shall conform to the material quality requirements in Section 72-2.02, "Materials," of the Standard Specifications for shape and for apparent specific gravity, absorption, and durability index. Rocks used for the temporary entrance shall conform to the following sizes:

Square Screen Size (mm)	Percentage Passing	Percentage Retained
150	100	0
75	0	100

Corrugated Steel Panels

Corrugated steel panels shall be prefabricated and shall be pressed or shop welded, with a slot or hooked section to facilitate coupling at the ends of the panels.

INSTALLATION

Temporary construction entrances shall be installed as follows:

A. Prior to placing the temporary entrance fabric, the areas shall be cleared of all trash and debris. Vegetation shall be removed to the ground level. Trash, debris, and removed vegetation shall be disposed of in conformance with the provisions in Section 7-1.13, "Disposal of Material Outside the Highway Right of Way," of the Standard Specifications.
B. A sump shall be constructed within 6 m of each temporary construction entrance as shown on the plans.
C. Before placing the temporary entrance fabric, the ground shall be graded to a uniform plane. The relative compaction of the top 0.5-m shall be not less than 90 percent. The ground surface shall be free of sharp objects that may damage the temporary entrance fabric, and shall be graded to drain to the sump as shown on the plans.
D. Temporary entrance fabric shall be positioned longitudinally along the alignment of the entrance, as directed by the Engineer.
E. The adjacent ends of the fabric shall be overlapped a minimum length of 300 mm.
F. Rocks to be placed directly over the fabric shall be spread in the direction of traffic, longitudinally and along the alignment of the temporary construction entrance.
G. During spreading of the rocks, vehicles or equipment shall not be driven directly on the fabric. A layer of rocks a minimum 150 mm thick shall be placed between the fabric and the spreading equipment to prevent damage to the fabric.
H. For Type 2 temporary construction entrances, a minimum of 6 coupled panel sections shall be installed for each temporary construction entrance. Prior to installing the panels, the ground surface shall be cleared of all debris to ensure uniform contact with the ground surface.

Fabric damaged during rock placement shall be repaired by placing a new piece of fabric over the damaged area. The piece of fabric shall be large enough to cover the damaged area and provide a minimum 450-mm overlap on all edges.

Details for a proposed alternative temporary construction entrance or alternative sump shall be submitted to the Engineer for approval at least 7 days prior to installation. The Contractor may eliminate the sump if approved in writing by the Engineer.

If buildup of soil and sediment deter the function of the temporary construction entrance, the Contractor shall immediately remove and dispose of the soil and sediment, and install additional corrugated steel panels and spread additional rocks to increase the capacity of the temporary construction entrance at the Contractor's expense.

When no longer required as determined by the Engineer, temporary construction entrances shall be removed and disposed of in conformance with the provisions in Section 7-1.13, "Disposal of Material Outside the Highway Right of Way," of the Standard Specifications.

Ground disturbance, including holes and depressions, caused by the installation and removal of the temporary construction entrance, including the sumps, shall be backfilled and repaired in conformance with the provisions in Section 15-1.02, "Preservation of Property," of the Standard Specifications.

While the temporary construction entrance is in use, pavement shall be cleaned and sediment removed at least once a day, and as often as necessary when directed by the Engineer. Soil and sediment or other extraneous material tracked onto existing pavement shall not be allowed to enter drainage facilities.

MAINTENANCE

The Contractor shall maintain temporary construction entrances throughout the contract or until removed. The Contractor shall prevent displacement or migration of the rock surfacing or corrugated steel panels. Significant depressions resulting from settlement or heavy equipment shall be repaired by the Contractor, as directed by the Engineer.

Temporary construction entrances shall be maintained to minimize tracking of soil and sediment onto existing public roads.

Temporary construction entrances shall be repaired or replaced on the same day the damage occurs. Damage to the temporary construction entrance resulting from the Contractor's vehicles, equipment, or operations shall be repaired at the Contractor's expense.

MEASUREMENT AND PAYMENT

Quantities of temporary construction entrances will be determined from actual count in place.

The contract unit price paid for temporary construction entrance shall include full compensation for furnishing all labor, materials, tools, equipment, and incidentals, and for doing all the work involved in constructing temporary construction entrance, complete in place, including excavation and backfill, maintenance, and removal, as shown on the plans, as specified in the Standard Specifications and these special provisions, and as directed by the Engineer.

The cost of maintaining the temporary construction entrance will be borne equally by the State and the Contractor. The division of cost will be made be determining the cost of maintaining temporary construction entrance in conformance with the provisions in Section 9-1.03, "Force Account Payment," of the Standard Specifications and paying to the Contractor one-half of that cost.

Cleanup, repair, removal, disposal, or replacement due to improper installation or the Contractor's negligence will not be considered as included in the cost for performing maintenance.

10-1.09 EROSION CONTROL (NETTING)

Erosion control (netting) shall conform with the details as shown on the plans, as specified in these special provisions, and as directed by the Engineer.

Erosion control (netting) work shall consist of furnishing, installing, and maintaining control netting in ditches or swales, on embankment slopes, excavation slopes and other locations as shown on the plans.

Following the installation of erosion control (netting), erosion control materials shall be applied onto the netting face as specified in "Erosion Control (Type D)," of these special provisions.

MATERIALS

Materials for the erosion control (netting) shall conform to the provisions in Section 20-2, "Materials," of the Standard Specifications and these special provisions.

Erosion Control Netting

Erosion control netting shall consist of 100 percent spun coir fiber and shall conform to the following:

Specification	Requirement
Weight, grams per square meter ASTM Designation: D 3776	400
Minimum Tensile Strength, kilonewtons, ASTM Designation: D 4595-86	9.0 to 11.3 kN/m in longitudinal direction (dry) 5.0 to 10.7 kN/m in cross-direction (dry) 6.0 to 9.8 kN/m in longitudinal direction (wet) 4.0 to 9.4 kN/m in cross- direction (wet)
Roll Width, meters, min.	4
Area/Roll, square meters, min.	200
Open Area, percent	63-70

Staples

Staples shall be as shown on the plans.

INSTALLATION

Erosion control (netting) shall be installed in ditches or swales, on embankment slopes, or excavation slopes as follows:

A. Erosion control (netting) strips shall be placed loosely along the ditch or swale with the longitudinal edges and joints parallel to the centerline of the ditch or swale. Longitudinal joints of netting shall be overlapped and stapled. Transverse joints of netting shall be secured in intermediate joint trenches. Staples shall be driven perpendicular to the slopes. Ends of the netting shall be secured in place in key trenches.

B. Erosion control (netting) strips shall be placed loosely on the embankment or excavation slope with the longitudinal joints perpendicular to the slope contour lines. Longitudinal and transverse joints of netting shall be overlapped and stapled. Staples shall be driven perpendicular to the slopes. Ends of the netting shall be secured in place in key trenches.

MAINTENANCE

Erosion control (netting) shall be repaired or replaced on the same day the damage occurs. Damaged netting shall be replaced. Washouts between joints or beneath the erosion control (netting) shall be repaired.

Erosion control (netting) damaged during the progress of work or resulting from the Contractor's vehicles, equipment, or operations shall be repaired or replaced at the expense of the Contractor.

MEASUREMENT AND PAYMENT

The quantity of erosion control (netting) will be measured by the square meter as determined from actual slope measurements of the areas covered by the erosion control (netting) excluding overlaps.

The contract price paid per square meter for erosion control (netting) shall include full compensation for furnishing all labor, materials, tools, equipment, and incidentals, and for doing all the work involved in installing erosion control (netting), complete in place, including trench excavation and backfill, as shown on the plans, as specified in the Standard Specifications and these special provisions, and as directed by the Engineer.

10-1.10 OBSTRUCTIONS

Attention is directed to Section 8-1.10, "Utility and Non-Highway Facilities," and Section 15, "Existing Highway Facilities," and Section 51-1.19, "Utility Facilities," of the Standard Specifications and these special provisions.

Attention is directed to the existence of certain underground facilities that may require special precautions be taken by the Contractor to protect the health, safety and welfare of workers and of the public. Facilities requiring special precautions include, but are not limited to: conductors of petroleum products, oxygen, chlorine, and toxic or flammable gases; natural gas in pipelines greater than 150 mm in diameter or pipelines operating at pressures greater than 415 kPa (gage); underground electric supply system conductors or cables, with potential to ground of more than 300 V, either directly buried or in a duct or conduit which do not have concentric grounded or other effectively grounded metal shields or sheaths.

The Contractor shall notify the Engineer and the appropriate regional notification center for operators of subsurface installations at least 2 working days, but not more than 14 calendar days, prior to performing any excavation or other work close to any underground pipeline, conduit, duct, wire or other structure. Regional notification centers include, but are not limited to, the following:

Notification Center	Telephone Number
Underground Service Alert-Northern California (USA)	1-800-642-2444 1-800-227-2600
Underground Service Alert-Southern California (USA)	1-800-422-4133 1-800-227-2600

The following utility facilities will be relocated during the progress of the contract. The Contractor shall notify the Engineer, in writing, prior to doing work in the vicinity of the facility. The utility facility will be relocated within the listed working days, as defined in Section 8-1.06, "Time of Completion," of the Standard Specifications, after the notification is received by the Engineer:

Utility	Location	Working Days
TV Cable (Comcast)	East of Bent W6	15

The Contractor shall notify the Engineer and Comcast at (415) 503-4505, at least 48 hours before excavation and piling work is begun.

Installation of the water mains will require coordination with the Contractor's operations. The Contractor shall make the necessary arrangements with the San Francisco Public Utilities Commission/Water Department (SFWD), through the Engineer, and shall submit a schedule of work, verified by a representative of the utility company, to the Engineer. The schedule of work shall provide not less than the following number of working days, as defined in Section 8-1.06, "Time of Completion," of the Standard Specifications for the utility company to complete their work:

Utility (address)	Work Performed by the SFWD	Working Days
Water Main	Making a connection to an existing main	5
	Chlorination test including laboratory results	5
	Service change over services larger than 50-mm (per each service)	5
	Service change over services less than 50 mm (for up to 6 services)	1
	Excavation Safety Plans review	15

The Contractor shall notify in writing the Engineer and SFWD, at least 15 working days in advance before any work to be performed by SFWD forces for disconnecting, and connecting of the water main, and disinfection. Furthermore, the Contractor shall confirm the scheduled work with the Engineer, and SFWD at (415)550-4956, at least 3 working days before the actual field work by SFWD.

The existing ground seismographic station, and sanitary sewer lift pump station, including pump station, underground vault and sanitary main system, will remain in service for the duration of this contract. The Contractor shall notify the Engineer and City and County of San Francisco Public Utilities Commission at (415) 648-6882 x 1290, and the Berkeley Seismology Specialist at (510) 486-7314 or 882-9816, at least 10 working days before excavation and piling work is begun. The Contractor shall field verify the location of the cable and ensure that the monitoring cable shall not damaged.

The existing electrical concrete duct bank (2.4 kV, 4.1 kV, and 12 kV) shown on the plans, will remain in service for the duration of this contract. The Contractor shall notify the Engineer and City and County of San Francisco Public Utilities Commission at (415) 648-6882 x 1290, at least 10 working days before excavation and piling work is begun. The electrical line shall be physically located in the presence of the authorized representative from the City and County of San Francisco Public Utilities Commission. The Contractor shall not perform any excavation of piling close to the electrical line without the utility owner.

Full compensation for protecting the existing ground seismographic station and monitoring cable, and sanitary sewer lift pump station, including pump station, underground vault and sanitary

main system, and electrical concrete duct bank (2.4 kV, 4.1 kV, and 12 kV) shall be considered as included in the contract lump sum price paid for this contract change order 64 work involved, including all supplements, and no separate payment will be made therefor.

In the event that the utility facilities mentioned above are not removed or relocated by the date specified and, if in the opinion of the Engineer, the Contractor's operations are delayed or interfered with by reason of the utility facilities not being removed or relocated by the date specified, the State will compensate the Contractor for the delays to the extent provided in Section 8-1.09, "Right of Way Delays," of the Standard Specifications, and not otherwise, except as provided in Section 8-1.10, "Utility and Non-Highway Facilities," of the Standard Specifications.

10-1.11 DUST CONTROL

Dust control shall conform to the provisions in Section 10, "Dust Control," of the Standard Specifications .

10-1.12 CONSTRUCTION AREA SIGNS

Construction area signs for temporary traffic control shall be furnished, installed, maintained, and removed when no longer required in conformance with the provisions in Section 12, "Construction Area Traffic Control Devices," of the Standard Specifications and these special provisions.

Attention is directed to "Furnish Sign" of these special provisions.

Attention is directed to the provisions in "Prequalified and Tested Signing and Delineation Materials" of these special provisions. Type II retroreflective sheeting shall not be used on construction area sign panels. Type III, IV, VII, VIII, or IX retroreflective sheeting shall be used for stationary mounted construction area sign panels.

Unless otherwise shown on the plans or specified in these special provisions, the color of construction area warning and guide signs shall have black legend and border on orange background, except W10-1 or W47(CA) (Highway-Rail Grade Crossing Advance Warning) sign shall have black legend and border on yellow background.

Orange background on construction area signs shall be fluorescent orange.

Repair to construction area sign panels will not be allowed, except when approved by the Engineer. At nighttime under vehicular headlight illumination, sign panels that exhibit irregular luminance, shadowing or dark blotches shall be immediately replaced at the Contractor's expense.

The Contractor shall notify the appropriate regional notification center for operators of subsurface installations at least 2 working days, but not more than 14 calendar days, prior to commencing excavation for construction area sign posts. The regional notification centers include, but are not limited to, the following:

Notification Center	Telephone Number
Underground Service Alert-Northern California (USA)	(800) 642-2444 (800) 227-2600
Underground Service Alert-Southern California (USA)	(800) 422-4133

Excavations required to install construction area signs shall be performed by hand methods without the use of power equipment, except that power equipment may be used if it is determined there are no utility facilities in the area of the proposed post holes. The post hole diameter, if

backfilled with portland cement concrete, shall be at least 100 mm greater than the longer dimension of the post cross-section.

Construction area signs placed within 4.6 m from the edge of the travel way shall be mounted on stationary mounted sign supports as specified in "Construction Area Traffic Control Devices" of these special provisions.

The Contractor shall maintain accurate information on construction area signs. Signs that are no longer required shall be immediately covered or removed. Signs that convey inaccurate information shall be immediately replaced or the information shall be corrected. Covers shall be replaced when they no longer cover the signs properly. The Contractor shall immediately restore to the original position and location any sign that is displaced or overturned, from any cause, during the progress of work.

10-1.13 MAINTAINING TRAFFIC

Attention is directed to Sections 7-1.08, "Public Convenience," 7-1.09, "Public Safety," and 12, "Construction Area Traffic Control Devices," of the Standard Specifications and to the provisions in "Public Safety" of these special provisions and these special provisions. Nothing in these special provisions shall be construed as relieving the Contractor from the responsibilities specified in Section 7-1.09.

Lane closures shall conform to the provisions in section "Traffic Control System for Lane Closure," of these special provisions.

Personal vehicles of the Contractor's employees shall not be parked on the traveled way or shoulders including any section closed to public traffic, except in the area proposed by the Contractor and approved by the Engineer .

The Contractor shall notify United States of Coast Guard Officer, at (415) 399-3504 of the Contractor's intent to begin work at least 5 working days before work is begun. The Contractor shall cooperate with United States of Coast Guard relative to handling traffic on USCG Road., through the area and shall make arrangements relative to keeping the working area clear of parked vehicles.

The Contractor shall provide and maintain a minimum of one paved traffic lane, not less than 3.6 m wide on USCG Road, during the construction of the electrical duct bank and drainage system across the USCG Road, and bridge bent adjacent to the USCG Road.

The Contractor shall provide and maintain a 3.6 m lane access road to Sanitary Sewer Lift Pump Station, at all time. The Contractor shall submit a written request for an approval from San Francisco Public Utilities Commission through the Engineer at least 96 hours in advance for any construction operation that may block the access road to the sanitary sewer lift pump station.

Full compensation for providing and maintaining the above access shall be considered as included in the contract lump sum price paid for this contract change order 64 work involved, including all supplements involved and no additional compensation will be allowed therefor.

Attention is directed to "Bridge Tolls" of these special specifications. The access of the contractor's trucks hauling materials to the project site, from westbound Route 80 and westbound bus lanes, located along north side of San Francisco-Oakland Bay Bridge toll plaza, shall not be allowed, during the peak periods from 5:00 a.m. to 10:00 a.m., and 3:00 p.m. to 7:00 p.m., on weekdays.

Designated legal holidays are: January 1st, the third Monday in February, the last Monday in May, July 4th, the first Monday in September, November 11th, Thanksgiving Day, and December 25th. When a designated legal holiday falls on a Sunday, the following Monday shall be a

designated legal holiday. When November 11th falls on a Saturday, the preceding Friday shall be a designated legal holiday.

Minor deviations from the requirements of this section concerning hours of work which do not significantly change the cost of the work may be permitted upon the written request of the Contractor if, in the opinion of the Engineer, public traffic will be better served and the work expedited. These deviations shall not be adopted by the Contractor until the Engineer has approved the deviations in writing. Other modifications will be made by contract change order.

10-1.14 TRAFFIC CONTROL SYSTEM FOR LANE CLOSURE

A traffic control system shall consist of closing traffic lanes in conformance with the details shown on the plans, the provisions in Section 12, "Construction Area Traffic Control Devices," of the Standard Specifications, the provisions under "Maintaining Traffic" and "Construction Area Signs" of these special provisions, and these special provisions.

The provisions in this section will not relieve the Contractor from the responsibility to provide additional devices or take measures as may be necessary to comply with the provisions in Section 7-1.09, "Public Safety," of the Standard Specifications.

If components in the traffic control system are displaced or cease to operate or function as specified, from any cause, during the progress of the work, the Contractor shall immediately repair the components to the original condition or replace the components and shall restore the components to the original location.

When lane closures are made for work periods only, at the end of each work period, components of the traffic control system, except portable delineators placed along open trenches or excavation adjacent to the traveled way, shall be removed from the traveled way and shoulder. If the Contractor so elects, the components may be stored at selected central locations designated by the Engineer within the limits of the highway right of way.

One-way traffic shall be controlled on USCG Road., during the construction of the electrical duct bank and drainage system across the USCG Road, and bridge bent adjacent to the USCG Road, in conformance with the plan entitled "Traffic Control System for Lane Closure on Two Lane Conventional Highways" and these special provisions.

Additional advance flaggers will be required.

Utilizing a pilot car will be at the option of the Contractor. If the Contractor elects to use a pilot car, the cones shown along the centerline on the plan need not be placed. The pilot car shall have radio contact with personnel in the work area. The maximum speed of the pilot car through the traffic control zone shall be 40 kilometers per hour (25 mph).

The contract lump sum price paid for traffic control system shall be considered as included in the contract lump sum price paid for this contract change order 64 work involved, including all supplements, for furnishing all labor (except for flagging costs), materials (including signs), tools, equipment, and incidentals, and for doing all the work involved in placing, removing, storing, maintaining, moving to new locations, replacing, and disposing of the components of the traffic control system and for furnishing and operating the pilot car, (including driver, radios, other equipment, and labor required), as shown on the plans, as specified in the Standard Specifications and these special provisions, and as directed by the Engineer. Flagging costs will be paid for as provided in Section 12-2.02, "Flagging Costs," of the Standard Specifications.

The adjustment provisions in Section 4-1.03, "Changes," of the Standard Specifications shall not apply to the item of traffic control system. Adjustments in compensation for traffic control system will be made only for increased or decreased traffic control system required by changes ordered by

the Engineer and will be made on the basis of the cost of the increased or decreased traffic control necessary. The adjustment will be made on a force account basis as provided in Section 9-1.03, "Force Account Payment," of the Standard Specifications for increased work and estimated on the same basis in the case of decreased work.

Traffic control system required by work which is classed as extra work, as provided in Section 4-1.03D of the Standard Specifications, will be paid for as a part of the extra work.

10-1.15 EXISTING HIGHWAY FACILITIES

The work performed in connection with various existing highway facilities shall conform to the provisions in Section 15, "Existing Highway Facilities," of the Standard Specifications and these special provisions.

ABANDON PIPE LINE

Existing water mains, and sewers, where shown on the plans to be abandoned, shall be abandoned in place or, at the option of the Contractor, the water mains, and sewers shall be removed and disposed of. Resulting openings into existing structures that are to remain in place shall be plugged with commercial quality concrete containing not less than 300 kg of cement per cubic meter.

Abandoning water mains, and sewers in place shall conform to the following:

A. Water mains, and sewers that intersect the side slopes shall be removed to a depth of not less than one meter measured normal to the plane of the finished side slope, before being abandoned.
B. Water mains, and sewers 300 mm in diameter and larger, shall, at the Contractor's option, be backfilled with either sand, controlled low strength material or slurry cement backfill conforming to the provisions in Section 19-3.062, "Slurry Cement Backfill," of the Standard Specifications by any method acceptable to the Engineer that completely fills the pipe. Sand backfill material shall be clean, free draining, and free from roots and other deleterious substances.
C. The ends of water mains, and sewers shall be securely closed by a 150 mm thick tight fitting plug or wall of commercial quality concrete.

Water mains, and sewers shall not be abandoned until their use is no longer required. The Contractor shall notify the Engineer in advance of any intended culvert or pipeline abandonment.

Full compensation for concrete plugs, pipe removal, structure excavation, and backfill (including sand, controlled low strength material or slurry cement backfill) shall be considered as included in the contract lump sum price paid for this contract change order 64 work involved, including all supplements, and no additional compensation will be allowed therefor.

REMOVE FIRE HYDRANT

Existing fire hydrants, at locations shown on the plans to be removed, shall be removed. Holes at the existing locations shall be backfilled and graded to conform to adjacent conditions where necessary.

The contract unit price paid for remove fire hydrant shall include full compensation for furnishing all labor, materials, tools, equipment, and incidentals, and for doing all the work involved

in remove fire hydrant, complete, including removal, transportation and disposal of fire hydrant, related pipes, fittings, valves and accessories, and backfilling and grading the area to match existing conditions and to drain, as shown on the plans, as specified in the Standard Specifications and these special provisions, and as directed by the Engineer.

RELOCATE FIRE HYDRANT

Existing fire hydrants, at locations shown on the plans to be relocated, shall be relocated. Holes at the existing locations shall be backfilled and graded to conform to adjacent conditions where necessary.

The contract unit price paid for relocate fire hydrant shall include full compensation for furnishing all labor, materials, tools, equipment, and incidentals, and for doing all the work involved in remove fire hydrant, complete, including removal, transportation and disposal of fire hydrant, related pipes, fittings, valves and accessories, and backfilling and grading the area to match existing conditions and to drain, as shown on the plans, as specified in the Standard Specifications and these special provisions, and as directed by the Engineer.

REMOVE ABADON UTILITY AND NON-HIGHWAY FACILITIES

Attention is directed to Section 8-1.10, "Utility and Non-Highway Facilities," and Section 15, "Existing Highway Facilities," and Section 51-1.19, "Utility Facilities," of the Standard Specifications and these special provisions, and "Obstructions," of the special provisions.

Existing abandon utilities and non-highway facilities to be removed as shown on the plans within the limits of structure excavation for the bridge footings, and electrical duct bank as shown on the plan, shall be removed and disposed of, except for the removal and relocation of the fire hydrants.

Full compensation for removing abandon utilities and non-highway facilities within the limits of structure excavation for the bridge footings, and electrical duct bank, shall be considered as included in the contract lump sum price paid for this contract change order 64 work involved, including all supplements, and no additional compensation will be allowed therefor.

Removed existing abandon utilities and non-highway facilities shall be disposed of outside the highway right of way in conformance with the provisions in Section 7-1.13, "Disposal of Material Outside the Highway Right of Way," of the Standard Specifications.

REMOVE TRAFFIC STRIPE ANDPAVEMENT MARKER

Existing traffic stripe and pavement markers, including under lying adhesive, shall be removed at the locations where the electrical duct bank is to be constructed across USCG Road, as shown on the plans and as directed by the Engineer.

Attention is directed to "Water Pollution Control" of these special provisions.

Full compensation for removing traffic stripe, and removing and disposing of pavement markers and underlying adhesive shall be considered as included in the contract lump sum price paid for this contract change order 64 work involved, including all supplements, and no additional compensation will be allowed therefor.

REMOVE DRAINAGE FACILITY

Existing culvert, and Inlet where shown on the plans to be removed, shall be completely removed and disposed of.

Full compensation for salvaging existing frames and grates shall be considered as included in the contract lump sum price paid for this contract change order 64 work involved, including all supplements, and no additional compensation will be allowed therefor.

REPLACE EXISTING PAVEMENT DELINEATION

Whenever existing pavement delineation is removed, or damaged due to the work involved in installing the electrical duct bank crossing the USCG Road at locations shown on the plans, the Contractor shall replace the pavement delineation in kind to match the existing pavement delineation. Replacement delineation shall be installed at existing or new locations, shall conform to the design of the existing delineation and shall be equal in all respects to the best portions of the existing delineation. The work of replacing existing delineation shall be performed in conformance with the requirements for new work of similar character as specified in the specifications.

Full compensation for replacing or repairing pavement delineation shall be considered as included in the contract lump sum price paid for this contract change order 64 work involved, including all supplements, and no separate payment will be made therefor.

10-1.16 SEWER VIDEO SURVEY

This work shall consist of investigating, sewer cleaning as necessary to facilitate the survey, documenting, and reporting on the structural condition of the existing sewer lines both before and after seismic retrofit construction from manhole to manhole at the following locations:

SEWER VIDEO SURVEY LOCATIONS

No.	Location	Sewer Pipe Size
1	West of Bent W4	300-mm VCP
2	West of Bent W4	150-mm VCP
3	North of Bent W3	200-mm VCP

The Contractor shall videotape with narration the condition of the sewer to show any and all structural deficiencies including cracks, holes, exposed aggregates and reinforcing bars, honey combed areas, damaged construction joints, deteriorated concrete surfaces, infiltrations, root intrusions and missing pieces. The locations of all deficiencies shall be shown by stationing with reference points agreed upon by the Contractor and the Engineer. The Contractor shall provide the dimensions of all major structural deficiencies and provide supplemental photographs of such deficiencies when requested by the City and County of San Francisco, Bureau of Engineering.

For all the sewer locations as listed above and for all other sewer locations subjected to live loads exceeding AASHTO Standard HS-20, the Contractor shall investigate, document and report the sewer conditions before commencement and after final completion of the project.

At least 10 working days prior to investigation, the Contractor shall submit for acceptance 5 copies of the proposed operations and safety procedure to the Engineer.

The Engineer will either accept or reject such procedures within 5 working days of receipt. Approval of the procedures will be contingent on them being satisfactory to the City and County of San Francisco. Such procedures must comply with the Safety Procedures Section of this special provision.

The Contractor shall call the general foreman of the City and County of San Francisco Bureau of Street and Sewer Repair two days in advance at (415) 695-2095 for coordination and to gain access to the sewer.

The Contractor shall cooperate with local authorities relative to handling traffic through the area and shall make his own arrangements relative to keeping the working area clear of parked vehicles.

The Contractor shall prepare for the Engineer's approval, a written report documenting the results of its investigation. Approval of the report will be contingent on it being satisfactory to the City and County of San Francisco. In this report, the Contractor shall place its emphasis on; first, the deficiencies discovered during the investigation; secondly; the proposed measures to remedy such deficiencies and; thirdly, the serviceability of the present sewer.

The Contractor shall: (a) after the pre-construction sewer investigation, deliver 2 copies of the report and 2 copies of the videotape 5 working days before actual start of construction and; (b) after post-construction sewer investigation, deliver 5 copies of the final report and 2 copies of the post-construction videotape, all to the Manager of the Hydraulics Section, Bureau of Engineering, City and County of San Francisco.

SAFETY PROCEDURES

Except to the extent that more explicit or more stringent requirements are stated herein, the Contractor shall comply with all applicable federal, State and local safety and health requirements and standards.

PRE-ENTRY AND CONFINED SPACE OPERATIONS

Pre-entry and confined space operations shall be performed in accordance with the provisions of Article 108 of the General Industry Safety Orders and Section 1532 of the Construction Safety Orders of Title 8 of the California Code of Regulations. These provisions shall govern:

A. Blocking of laterals.
B. Testing for the existence of dangerous water and air contamination.
C. Ventilation requirements.
D. Entry rate work within confined spaces.
E. Precautions for emergencies involving work in the sewer.
F. Other related work.

Testing shall take place for the following suspected conditions prior to entering the sewer, and at times during inspection:

1. Oxygen deficiencies.
2. Carbon dioxide.
3. Combustible gases.
4. Contaminated and infectious waste.

ADDITIONAL REQUIREMENTS

The Contractor shall provide safeguards, including traffic barriers, warning signs, barricades, temporary fences and other similar safeguards that are required for the protection of all personnel during the performance of this contract.

The Contractor shall provide to all workers and inspectors, protective, disposable clothing for sewage conditions consisting of fullbody coveralls, gloves, boot type covers on reusable footwear, eye protection, hardhats and safety tools as required by job conditions and CAL-OSHA safety rules and regulations.

The Contractor shall provide air ventilation and respiratory protection to workers and inspectors in accordance with an operation and safety procedures plan required by CAL-OSHA and accepted by the City and County of San Francisco.

The Contractor shall provide a plan for rescue of workers and investigators for review by the Engineer and for approval by the City and County of San Francisco.

PAYMENT

The contract lump sum price paid for sewer video survey shall be considered as included in the contract lump sum price paid for this contract change order 64 work involved, including all supplements, for furnishing all labor, materials, tools, equipment, sewer cleaning as necessary to facilitate the survey, and incidentals, and for doing all the work involved in conducting the sewer video survey, including providing plans, reports and video tape, safety devices and precautions, as shown on the plans, as specified in the Standard Specifications and these special provisions, and as directed by the Engineer, and no other compensation will be allowed therefor.

10-1.17 CLEARING AND GRUBBING

Clearing and grubbing shall conform to the provisions in Section 16, "Clearing and Grubbing," of the Standard Specifications and these special provisions.

Attention is directed to "Hazardous Material Excavation" of "Earthwork," of these specifications.

Clearing and grubbing operations shall result in no visible dust.

Vegetation shall be cleared and grubbed only within the excavation and embankment slope line.

At locations adjacent to a bridge or other structure, clearing and grubbing of vegetation shall be limited to 1.5 m outside the physical limits of the bridge or structure except as specified herein except as specified herein.

Trees, bushes, and shrubs at locations where there is no temporary or permanent grading adjacent to or beneath the temporary bypass structure shall be protected in place from injury or damage resulting from the construction activities. Trees, bushes, and shrubs protected in-place beneath the temporary bypass structure shall be topped or pruned to a level that is 3000 mm, plus or minus 1000 mm, below the lowest elevation of the bridge at the point of the pruning.

Pruning and topping shall be performed under the continuous field supervision of an arborist with current certification by the International Society of Arboriculture (ISA) or as directed by the Engineer. In cases where the arborist concludes that topping or pruning may result in permanent damage to vegetation, the Contractor shall be instructed to clear the vegetation.

Existing vegetation outside the areas to be cleared and grubbed shall be protected from injury or damage resulting from the Contractor's operations. Existing vegetation and trees within the limits of the Environmentally Sensitive Areas (ESA) shall be protected throughout the duration of the Contract.

Activities controlled by the Contractor, except cleanup or other required work, shall be confined within the graded areas of the roadway.

Nothing herein shall be construed as relieving the Contractor of the Contractor's responsibility for final cleanup of the highway as provided in Section 4-1.02, "Final Cleaning Up," of the Standard Specifications.

The area of clearing and grubbing shown on the plans includes all areas of clearing and grubbing, pruning, and topping. Full compensation for pruning and topping, and providing an arborist shall be considered as included in the contract lump sum price paid for this contract change order 64 work involved, including all supplements, and no additional compensation will be allowed therefor.

10-1.18 EARTHWORK

Earthwork shall conform to the provisions in Section 19, "Earthwork," of the Standard Specifications and these special provisions.

Attention is directed to "Hazardous Material Excavation," of these special provisions.

Surplus excavated material shall become the property of the Contractor and shall be disposed of in conformance with the provisions in Section 7-1.13, "Disposal of Material Outside the Highway Right of Way," of the Standard Specifications.

Where a portion of the existing surfacing is to be removed, the outline of the area to be removed shall be cut on a neat line with a power-driven saw to a minimum depth of 50 mm before removing the surfacing. Full compensation for cutting the existing surfacing shall be considered as included in the contract lump sum price paid for this contract change order 64 work involved, including all supplements, and no additional compensation will be allowed therefor.

Reinforcement or metal attached to reinforced concrete rubble placed in embankments shall not protrude above the grading plane. Prior to placement within 0.6-m below the grading plane of embankments, reinforcement or metal shall be trimmed to no greater than 20 mm from the face of reinforced concrete rubble. Full compensation for trimming reinforcement or metal per cubic meter for the types of excavation shown in the Engineer's estimate, or the contract prices paid for furnishing and placing imported borrow or embankment material, as the case may be, shall be considered as included in the contract lump sum price paid for this contract change order 64 work involved, including all supplements, and no additional compensation will be allowed therefor.

At the option of the Contractor, slurry cement backfill, conforming to the provisions in Section 19-3.062, "Slurry Cement Backfill," of the Standard Specifications, may be used as structure backfill for pipe culverts, including aluminum and aluminum coated pipe culverts.

COMPACTION FOR DUCK BANK BACKFILL

Duck bank backfill shall conform to the provisions in Section 19-3, "Structure Excavation and Backfill," of the Standard Specifications. Backfill placed in duct bank trenches which are to be outside of slope lines and not under pavement shall be compacted to a relative compaction of not less than 90 percent. Backfill on slopes and in areas where pavement is to be constructed shall be compacted to a relative compaction of not less than 95 percent.

If structure excavation or structure backfill for bridges is not otherwise designated by type and payment for the structure excavation or structure backfill has not otherwise been provided for in the Standard Specifications or these special provisions, the structure excavation or structure backfill will be measured and paid for as structure excavation (bridge) or structure backfill (bridge), respectively.

Structure excavation designated as (Type D), for footings at the locations shown on the plans, will be measured and paid for as structure excavation (Type D). Ground water or surface water is

expected to be encountered at these locations, but seal course concrete is not shown or specified. Structure excavation for footings at locations not designated on the plans as structure excavation (Type D), and where ground or surface water is encountered, will be measured and paid for as structure excavation (bridge).

Structure excavation designated as (Type H), for footings at the locations shown on the plans, will be measured and paid for as structure excavation (Type H). Hazardous materials are expected to be encountered during excavation.

Structure excavation designated as (Class II), for footings at the locations shown on the plans, will be measured and paid for as structure excavation (Class II). Petroleum contamination is expected to be encountered during excavation.

HAZARDOUS MATERIAL EXCAVATION

Hazardous material excavation shall consist of excavating hazardous material and Class II material identified on the plans as being within excavation limits shown on the plans, specified in the Standard Specifications, or specified or directed by the Engineer and stockpiling and disposing of the material as specified in this section.

Excavated hazardous material and Class II material shall be managed as follows:

A. Hazardous material – Haul and dispose of the material at a permitted hazardous waste management facility in conformance with Section 2521 of Title 23 of the California Code of Regulations, Section 7-1.13, "Disposal of Material Outside the Highway Right of Way," of the Standard Specifications, and these special provisions.
B. Class II material – Haul and dispose of the material at a permitted Class II waste management facility in conformance with Section 20210 of Title 27 of the California Code of Regulations, Section 7-1.13, "Disposal of Material Outside the Highway Right of Way," of the Standard Specifications, and these special provisions.

Hazardous materials shall be transferred directly from the excavation to a registered transport vehicle, a storage container approved for transport of hazardous waste by the United States Department of Transportation, or a stockpile location approved by the Engineer. Class II material shall be transferred directly from the excavation to a transport vehicle, a storage container, or a stockpile location approved by the Engineer. Stockpile locations for Class II material shall be maintained in conformance with the provisions in "Water Pollution Control" of these special provisions. Stockpile locations for hazardous material shall be maintained as follows:

A. The material shall not contain free liquids that separate readily from the material. The presence or absence of free liquids shall be demonstrated by United States Environmental Protection Agency Method 9095 as modified by Section 66264.314 of Title 22 of the California Code of Regulations.
B. The material shall be stored on undamaged 1.5-mm high-density polyethylene or an equivalent impermeable barrier unless the stockpiling location is on a paved surface. If the location is on a paved surface the thickness of the barrier can be reduced to 0.5-mm high-density polyethylene or its equivalent. The dimensions of the barrier shall exceed the dimensions of the stockpile at all times. Any seams in the barrier shall be sealed to prevent leakage.

C. At the end of each day or prior to a storm event the material shall be covered with undamaged 0.3-mm polyethylene or an equivalent impermeable barrier to prevent windblown dispersion and precipitation run-off and run-on. When more than one sheet is required to cover the material, the sheets shall be overlapped a minimum of 0.45-m in a manner that prevents water from flowing onto the material. The cover shall be secured in a manner that keeps it in place at all times. Driven anchors shall not be used except at the perimeter of the stockpile. The cover shall be inspected and maintained in conformance with the provisions in "Water Pollution Control" of these special provisions.

These stockpiling requirements apply to temporary storage outside of an excavation or a transport container including, but not limited to, staging of excavated material next to the excavation prior to pick up by loading equipment, accumulating material for full transport loads, and awaiting test results required by a disposal facility. The removal of hazardous material stockpiles shall begin within 90 days of accumulating 100 kg of hazardous material. After final removal has occurred the Contractor shall be responsible for any cleanup deemed necessary by the Engineer.

Hazardous material and Class II material on exteriors of transport vehicles shall be removed and placed either into the current transport vehicle or the excavation prior to the vehicle leaving the loading area. No hazardous material shall be deposited on public roads. The Contractor shall indemnify the State from any costs due to spillage during the transport of the hazardous material to the disposal facility.

Attention is directed to "Hazardous Material, General" of these special provisions.

SAMPLING AND ANALYSIS

The Contractor shall test the material to be excavated for any additional acceptance requirements of the disposal facility. Sampling and analysis shall be performed using the sampling and analysis procedure approved by the Engineer and the disposal facility.

The Contractor may perform additional tests on the material to be excavated for confirmation of the classification as hazardous material or Class II material. Sampling and analysis shall be based on guidelines in USEPA, SW 846, "Test Methods for Evaluating Solid Waste, Volume II: Field Manual Physical/Chemical Methods." Changes in classification of materials will be handled in accordance with Section 4-1.03, "Changes," of the Standard Specifications.

The Contractor shall submit, for approval by the Engineer, a Sampling and Analysis Plan that describes the scope of the investigation, along with the name, address, and certification number of the testing laboratory, 15 working days prior to beginning any sampling or analysis for additional disposal facility requirements, reclassification of material, characterization of material outside of the excavation pay limits or the horizontal limits of the classification zones shown on the plans. The Sampling and Analysis Plan shall be prepared under the guidance of a registered professional experienced in site characterization. The Engineer will make the final decision on reclassification or characterization of material after review of the test data. Six working days shall be allowed for review of test data.

Sampling and analysis of material excavated from outside the horizontal limits of the material classification zones shown on the plans will be paid for as extra work as provided in Section 4-1.03D of the Standard Specifications

Operations shall be conducted in a manner that prevents increases in the quantities of hazardous material resulting from mixing with material containing lower contaminant concentrations. No

additional compensation will be made for material requiring reclassification due to failure to segregate the material after excavation.

Hazardous material and Class II material will be measured in conformance with the Standard Specifications and these special provisions for the type of excavation involved.

The contract price paid per cubic meter for structure excavation (Duct Bank) (Type H) and structure excavation (Type H) shall include full compensation for furnishing all labor, materials, tools, equipment, and incidentals and for doing all the work involved in excavating, stockpiling, loading, sampling and analyzing, hauling, and disposing of hazardous material, complete in place, as shown on the plans, as specified in the Standard Specifications and these special provisions, and as directed by the Engineer.

The contract price paid per cubic meter for structure excavation (Class II) shall include full compensation for furnishing all labor, materials, tools, equipment, and incidentals and for doing all the work involved in excavating, stockpiling, loading, sampling and analyzing, hauling, and disposing of Class II material, complete in place, as shown on the plans, as specified in the Standard Specifications and these special provisions, and as directed by the Engineer.

Full compensation for all excavation work involving loading, stockpiling, transporting, and disposing of hazardous material and Class II material, which is not otherwise designated by type or class, and is not otherwise paid for under separate contract items, shall be considered as included in the contract lump sum price paid for this contract change order 64 work involved, including all supplements, and no additional compensation will be allowed therefor.

10-1.19 STRUCTURE EXCAVATION (ROCK)

Structure excavation (rock) shall conform to the provisions in Section 19, "Earthwork," of the Standard Specifications and these special provisions.

Structure excavation (rock) shall be performed using mechanical expansion devices and mechanical impact equipment. The use of explosives or chemical expansion devices will not be allowed.

The Contractor shall submit a rock excavation plan to the Engineer for approval a minimum of 20 working days prior to commencing rock excavation operations. The Contractor shall not perform rock excavation prior to approval of the rock excavation plan. The rock excavation plan shall, at a minimum, include a list of materials and equipment to be used, methods to be used to control and confine the excavated materials, and proposed haul routes to remove the excavated materials from the site.

The Contractor shall remove overburden soil and loose weathered rock for a distance that will be adequate to prevent caving of these materials during rock excavation. The removal of the overburden shall be considered as included in the contract lump sum price paid for this contract change order 64 work involved, including all supplements, and no separate payment will be made therefor.

Where hazardous materials are encountered during rock excavation, excavation shall conform to the additional requirements for special testing, handling, and disposal as specified for Type H excavation in "Earthwork" of these special provisions.

When footing concrete or masonry is to rest upon rock, the rock shall be fully uncovered and the surface thereof shall be removed to a depth sufficient to expose sound (moderately hard) rock. The rock shall be roughly leveled or cut to steps, and shall be roughened. Seams in the rock shall be grouted under pressure or treated as the Engineer may direct and the cost thereof will be paid for as extra work as provided in Section 4-1.03D, "Extra Work," of the Standard Specifications.

For footing construction on or in rock adjacent to existing footings or other structures, excavation limits shall match the limits shown on the plans as closely as possible. Rock shall not be overexcavated beneath existing footings or closer to existing footings than shown on the plans.

Where groundwater is encountered during rock excavation, it shall be the Contractor's responsibility to provide adequate means for groundwater control and removal as necessary to accomplish construction of the work.

Quantities to be paid for as structure excavation (rock) will be determined from limits shown on the plans. Removal of material entering the excavation as a result of slides or slip-outs shall be considered as included in the contract lump sum price paid for this contract change order 64 work involved, including all supplements, for the various types of excavation involved and no separate payment will be made therefor.

The contract price paid per cubic meter for structure excavation (rock) shall include full compensation for furnishing all labor, materials, tools, equipment, and incidentals and for doing all the work involved in structure excavation (rock) complete in place, including groundwater control and removal, special testing, handling and disposal where required, rock surface preparation and preparing and submitting the work plan and disposal of the excavated materials, as shown on the plans, as specified in the Standard Specifications and these special provisions, and as directed by the Engineer.

10-1.20 MOVE-IN/MOVE-OUT (EROSION CONTROL)

Move-in/move-out (erosion control) shall include moving onto the project when an area is ready to receive erosion control as determined by the Engineer, setting up all required personnel and equipment for the application of erosion control materials and moving out all personnel and equipment when erosion control in that area is completed.

When areas are ready to receive applications of erosion control (Types D), as determined by the Engineer, the Contractor shall begin erosion control work in that area within 5 working days of the Engineer's notification to perform the erosion control work.

Attention is directed to the requirements of erosion control (Types D) elsewhere in these special provisions.

Quantities of move-in/move-out (erosion control) will be determined as units from actual count as determined by the Engineer. For measurement purposes, a move-in followed by a move-out will be considered as one unit.

The contract unit price paid for move-in/move-out (erosion control) shall include full compensation for furnishing all labor, materials (excluding erosion control materials), tools, equipment, and incidentals and for doing all the work involved in moving in and removing from the project all personnel and equipment necessary for application of erosion control ((Types D), installation of Fiber Rolls, and installation of Erosion Control (Netting), , as shown on the plans, as specified in the Standard Specifications and these special provisions, and as directed by the Engineer.

No adjustment of compensation will be made for any increase or decrease in the quantities of move-in/move-out (erosion control) required, regardless of the reason for the increase or decrease. The provisions in Section 4-1.03B, "Increased or Decreased Quantities," of the Standard Specifications shall not apply to the item of move-in/move-out (erosion control).

10-1.21 EROSION CONTROL (TYPE D)

Erosion control (Type D) shall conform to the provisions in Section 20-3, "Erosion Control," of the Standard Specifications and these special provisions and shall consist of applying erosion control materials to embankment and excavation slopes and all other areas disturbed by construction activities.

Erosion control (Type D) shall be applied when an area is ready to receive erosion control as determined by the Engineer and in conformance with the provisions in "Move-in/Move-out (Erosion Control)" of these special provisions.

Prior to installing erosion control materials, soil surface preparation shall conform to the provisions in Section 19-2.05, "Slopes," of the Standard Specifications, except that rills and gullies exceeding 50 mm in depth or width shall be leveled. Vegetative growth, temporary erosion control materials, and other debris shall be removed from areas to receive erosion control.

MATERIALS

Materials shall conform to the provisions in Section 20-2, "Materials," of the Standard Specifications and these special provisions.

Seed

Seed shall conform to the provisions in Section 20-2.10, "Seed," of the Standard Specifications. Individual seed species shall be measured and mixed in the presence of the Engineer.

Seed shall be delivered to the project site in unopened separate containers with the seed tag attached. Containers without a seed tag attached will not be accepted.

A sample of approximately 30 g of seed will be taken from each seed container by the Engineer.

Legume Seed

Legume seed shall be pellet-inoculated or industrial-inoculated and shall conform to the following:

A. Inoculated seed shall be inoculated in conformance with the provisions in Section 20-2.10, "Seed," of the Standard Specifications.
B. Inoculated seed shall have a calcium carbonate coating.
C. Industrial-inoculated seed shall be inoculated with Rhizobia and coated using an industrial process by a manufacturer whose principal business is seed coating and seed inoculation.
D. Industrial-inoculated seed shall be sown within 180 calendar days after inoculation.
E. Legume seed shall consist of the following:

LEGUME SEED

Botanical Name (Common Name)	Percent Germination (Minimum)	Kilograms Pure Live Seed Per Hectare (Slope Measurement)
Lupinus albinfrons (Silver Bush Lupine)	40	10
Lupinus bicolor (Pygmy-leaf Lupine)	40	5
Trifolium tridentatum (Tomcat Clover)	50	5

Non-Legume Seed

Non-legume seed shall consist of the following:

NON-LEGUME SEED

Botanical Name (Common Name)	Percent Germination (Minimum)	Kilograms Pure Live Seed Per Hectare (Slope Measurement)
Achillea millefolium (White Yarrow)	50	2
Bromus carinatus* (California Brome)	40	10
Eschscholzia californica* (California Poppy)	35	6
Festuca californa (California Fescue)	30	8
Festuca rubra molate (Red Fescue Molate))	40	10
Nassella cernua (Nodding Needlegrass)	40	11

Straw

Straw shall conform to the provisions in Section 20-2.06, "Straw," of the Standard Specifications and these special provisions.

Wheat and barley straw shall be derived from irrigated crops.

Prior to delivery of wheat or barley straw to the project site, the Contractor shall provide the name, address and telephone number of the grower.

Straw shall be free of plastic, glass, metal, rocks, and refuse or other deleterious material.

Compost

At the option of the Contractor, compost may be either A, B, or any combination of both:

A. Green material consisting of chipped, shredded, or ground vegetation; or clean processed recycled wood products.

B. Class A , exceptional quality biosolids composts, conforming to the requirements in United States Environmental Protection Agency (EPA) regulation 40 CFR, Part 503c.

Compost shall not contain paint, petroleum products, herbicides, fungicides or other chemical residues harmful to plant or animal life. Other deleterious material, plastic, glass, metal or rock shall not exceed 0.1-percent by weight or volume.

Compost shall be thermophilically processed for 15 days. During this process, the compost shall be maintained at minimum internal temperature of 55°C and be thoroughly turned at least 5 times. A 90-day curing period shall follow the thermophilic process.

Compost shall be screened through a screen no larger than 12 mm.

Compost shall measure at least 6 on the maturity and stability scale with a Solvita test kit.

A Certificate of Compliance for compost shall be furnished to the Engineer in conformance with the provisions in Section 6-1.07, "Certificates of Compliance," of the Standard Specifications. The Certificate of Compliance shall state the Solvita maturity and stability scale test result of the compost.

Stabilizing Emulsion

Stabilizing emulsion shall conform to the provisions in Section 20-2.11, "Stabilizing Emulsion," of the Standard Specifications and these special provisions.

Stabilizing emulsion shall be in a dry powder form, may be reemulsifiable, and shall be a processed organic adhesive used as a soil tackifier.

APPLICATION

Erosion control materials shall be applied in separate applications in the following sequence:

A. Legume seed shall be applied by a dry method at the rate of __ kg per hectare (slope measurement). Legume seed shall not be applied with hydro-seeding equipment.

B. The following mixture in the rates indicated shall be applied with hydro-seeding equipment within 60 minutes after the seed has been added to the mixture:

Material	Kilograms Per Hectare (Slope Measurement)
Legume Seed	20
Non-Legume Seed	47
Fiber	47

Material	Cubic Meter Per Hectare (Slope Measurement)
Compost	2

D. Straw shall be applied at the rate of 4.0 tonnes per hectare based on slope measurements. Incorporation of straw will not be required. Straw shall be distributed evenly without clumping or piling.

E. The following mixture in the rates indicated shall be applied with hydro-seeding equipment:

Material	Kilograms Per Hectare (Slope Measurement)
Fiber	320
Stabilizing Emulsion (Solids)	140

Material	Cubic Meter Per Hectare (Slope Measurement)
Compost	2

The ratio of total water to total stabilizing emulsion in the mixture shall be as recommended by the manufacturer.

Once straw work is started in an area, stabilizing emulsion applications shall be completed in that area on the same working day.

The rates of erosion control materials may be changed by the Engineer to meet field conditions.

MEASUREMENT AND PAYMENT

Compost (erosion control) will be measured by the cubic meter in the vehicle at the point of delivery in conformance with the provisions in Section 9-1.01, "Measurement of Quantities," of the Standard Specifications.

The contract price paid per cubic meter for compost (erosion control) shall include full compensation for furnishing all labor, materials, tools, equipment, and incidentals, and for doing all the work involved in applying compost for erosion control, complete in place, as shown on the plans, as specified in the Standard Specifications and these special provisions, and as directed by the Engineer.

10-1.22 AGGREGATE BASE

Aggregate base shall be Class 3 and shall conform to the provisions in Section 26, "Aggregate Bases," of the Standard Specifications and these special provisions.

The restriction that the amount of reclaimed material included in Class 3 aggregate base not exceed 50 percent of the total volume of the aggregate used shall not apply. Aggregate for Class 3 aggregate base may include reclaimed glass. Aggregate base incorporating reclaimed glass shall not be placed at locations where surfacing will not be placed over the aggregate base.

Aggregate for Class 3 aggregate base shall conform to the following requirements:

Grading Requirements (Percentage Passing)

Sieve Sizes	19 mm Maximum		37.5 mm Maximum	
	Operating Range	Contract Compliance	Operating Range	Contract Compliance
50-mm			100	100
37.5-mm			90-100	87-100
25-mm	100	100	-----	-----
19-mm	90-100	87-100	50-85	45-90
4.75-mm	35-60	35-65	25-45	20-50
600-µm	10-30	5-35	10-25	6-29
75-µm	2-11	0-14	2-11	0-14

Quality Requirements

Tests	Operating Range	Contract Compliance
Sand Equivalent	25 Min.	22 Min.
Resistance (R-value)	-	78 Min.
Durability Index	-	35 Min.

The aggregate shall not be treated with lime, cement or other chemical material before the Durability Index test is performed. Untreated reclaimed asphalt concrete and portland cement concrete will not be considered to be treated with lime, cement or other chemical material for purposes of performing the Durability Index test.

10-1.23 ASPHALT CONCRETE

Asphalt concrete shall be Type A and shall conform to the provisions in Section 39, "Asphalt Concrete," of the Standard Specifications and these special provisions.

The amount of asphalt binder used in asphalt concrete placed in dikes and overside drains shall be increased one percent by mass of the aggregate over the amount of asphalt binder determined for use in asphalt concrete placed on the traveled way.

The asphalt content of the asphalt mixture will be determined in conformance with the requirements in California Test 379, or in conformance with the requirements in California Test 382.

Paint binder (tack coat) shall be applied to existing surfaces to be surfaced and between layers of asphalt concrete, except when eliminated by the Engineer.

Paint binder (tack coat) shall be, at the option of the Contractor, either slow-setting type asphaltic emulsion, rapid setting asphaltic emulsion or paving asphalt. Slow-setting type asphaltic emulsion and rapid setting asphaltic emulsion shall conform to the provisions in Section 39-4.02, "Prime Coat and Paint Binder (Tack Coat)," and the provisions in Section 94, "Asphaltic Emulsions," of the Standard Specifications. When paving asphalt is used for paint binder, the grade will be determined by the Engineer. Paving asphalt shall conform to the provisions in Section 39-4.02, "Prime Coat and Paint Binder (Tack Coat)," and the provisions in Section 92, "Asphalts," of the Standard Specifications.

Paint binder (tack coat) shall be applied in the liter per square meter range limits specified for the surfaces to receive asphalt concrete in the tables below. The exact application rate within the range will be determined by the Engineer.

Application Rates for Asphaltic Emulsion Paint Binder (Tack Coat) for Asphalt Concrete (except Open Graded) and on Portland Cement Concrete Pavement		
Type of surface to receive paint binder (tack coat)	Slow-Setting Asphaltic Emulsion L/m^2(Note A)	Rapid-Setting Asphaltic Emulsion L/m^2(Note B)
Dense, compact surfaces, between layers, and on PCCP	0.20 – 0.35	0.10 – 0.20
Open textured, or dry, aged surfaces	0.35 – 0.90	0.20 – 0.40

Note A: Slow-setting asphaltic emulsion is asphaltic emulsion diluted with additional water. Water shall be added and mixed with the asphaltic emulsion (containing up to 43 percent water) so the resulting mixture contains one part asphaltic emulsion and not more than one part added water. The water shall be added by the emulsion producer or at a facility that has the capability to mix or agitate the combined blend.

Note B: Undiluted rapid-setting asphaltic emulsion.

Application Rates for Paint Binder (Tack Coat) for Asphalt Concrete (except Open Graded)	
Type of surface to receive paint binder (tack coat)	Paving Asphalt L/m^2
Dense, compact surfaces and between layers	0.05 – 0.10
Open textured, or dry, aged surfaces	0.10 – 0.25

When asphaltic emulsion is used as paint binder (tack coat), asphalt concrete shall not be placed until the applied asphaltic emulsion has completely changed color from brown to black.

The miscellaneous areas to be paid for at the contract price per square meter for place asphalt concrete (miscellaneous area), in addition to the prices paid for the materials involved, shall be limited to the areas listed on the plans.

In addition to the provisions in Section 39-5.01, "Spreading Equipment," of the Standard Specifications, asphalt paving equipment shall be equipped with automatic screed controls and a sensing device or devices.

When placing asphalt concrete to the lines and grades established by the Engineer, the automatic controls shall control the longitudinal grade and transverse slope of the screed. Grade and slope references shall be furnished, installed, and maintained by the Contractor. Should the Contractor elect to use a ski device, the minimum length of the ski device shall be 9 m. The ski device shall be a rigid one piece unit and the entire length shall be utilized in activating the sensor.

When placing the initial mat of asphalt concrete on existing pavement, the end of the screed nearest the centerline shall be controlled by a sensor activated by a ski device not less than 9 m long. The end of the screed farthest from centerline shall be controlled by an automatic transverse slope device set to reproduce the cross slope designated by the Engineer.

When paving contiguously with previously placed mats, the end of the screed adjacent to the previously placed mat shall be controlled by a sensor that responds to the grade of the previously placed mat and will reproduce the grade in the new mat within a 3-mm tolerance. The end of the screed farthest from the previously placed mat shall be controlled in the same way it was controlled when placing the initial mat.

Should the methods and equipment furnished by the Contractor fail to produce a layer of asphalt concrete conforming to the provisions, including straightedge tolerance, of Section 39-6.03, "Compacting," of the Standard Specifications, the paving operations shall be discontinued and the Contractor shall modify the equipment or methods, or furnish substitute equipment.

Should the automatic screed controls fail to operate properly during a day's work, the Contractor may manually control the spreading equipment for the remainder of that day. However, the equipment shall be corrected or replaced with alternative automatically controlled equipment conforming to the provisions in this section before starting another day's work.

The area to which paint binder has been applied shall be closed to public traffic. Care shall be taken to avoid tracking binder material onto existing pavement surfaces beyond the limits of construction.

A drop-off of more than 45 mm will not be allowed at any time between adjacent lanes open to public traffic.

Half-width surfacing operations shall be performed in a manner that, at the end of each day's work, the distance between the ends of adjacent surfaced lanes shall not be greater than can be completed in the following day of normal surfacing operations.

Where the existing pavement is to be widened by constructing a new structural section adjacent to the existing pavement, the new structural section shall be completed to match the elevation of the

edge of the existing pavement at each location prior to spreading and compacting asphalt concrete over the adjacent existing pavement.

Asphalt concrete surfacing shall be placed on existing surfacing, including curve widening, chain control lanes, turnouts, left turn lanes, and public and private road connections shown on the plans, unless otherwise directed by the Engineer.

10-1.24 PILING

GENERAL

Piling shall conform to the provisions in Section 49, "Piling," of the Standard Specifications, and these special provisions.

Unless otherwise specified, welding of any work performed in conformance with the provisions in Section 49, "Piling," of the Standard Specifications, shall be in conformance with the requirements in AWS D1.1.

Epoxy coated reinforcement for pile anchorages shall conform to "Epoxy-Coated Prefabricated Reinforcement," of these special provisions.

Foundation recommendations are included in the "Information Handout" available to the Contractor as provided for in Section 2-1.03, "Examination of Plans, Specifications, Contract, and Site of Work," of the Standard Specifications.

Attention is directed to "Welding" of these special provisions.

If at any time during pile driving the blow count exceeds three times the required blow count as determined from Section 49, "Piling," of the Standard Specifications, the Contractor shall discontinue driving and notify the Engineer. Driving shall not resume until so ordered by the Engineer.

Difficult pile installation is anticipated due to the presence of caving soils, hazardous and contaminated materials, high ground water, cobbles and boulders, rock cuttings, timber piles, subsurface concrete debris, underground utilities, and the requirements of pile embedment into rock.

Drill cuttings from areas within the limits of hazardous materials shall be managed in conformance with the provisions of "Hazardous Material Excavation" in "Earthwork," of these special provisions.

When a calculated ultimate geotechnical capacity is shown on the plans for piling, that value shall be utilized in lieu of nominal resistance in Section 49, "Piling," of the Standard Specifications, and these special provisions.

Jetting and Drilling

Jetting to obtain the specified penetration in conformance with the provisions in Section 49-1.05, "Driving Equipment," of the Standard Specifications shall not be used for driven type piles.

Drilling to obtain the specified penetration in conformance with the provisions in Section 49-1.05, "Driving Equipment," of the Standard Specifications shall not be used for driven type piles except at the locations shown in the following table or where obstructions to pile penetration are encountered. Should such obstructions be encountered, the Contractor shall provide special driving tips or heavier pile sections, subexcavate below the bottom of footing, predrill or core holes not greater than the least dimension of the pile to the proper depth, spud the piles, or take other measures to prevent damage to the pile during driving.

Materials resulting from jetting or drilling holes shall be disposed of in conformance with the provisions in Section 19-2.06, "Surplus Material," of the Standard Specifications.

Bridge Name or Number	Abutment Number	Bent Number	Elevation of Bottom of Jet or Hole
	--		

Full compensation for providing special tips, heavier sections, or for subexcavating, predrilling, coring, spudding or employing other measures to prevent damage to the piles shall be considered as included in the contract lump sum price paid for this contract change order 64 work involved, including all supplements, paid per unit for drive steel pile of the size shown on the plans, and no additional compensation will be allowed therefor.

CAST-IN-DRILLED-HOLE CONCRETE PILES

Cast-in-drilled-hole concrete piling shall conform to the provisions in Section 49-4, "Cast-In-Place Concrete Piles," of the Standard Specifications and these special provisions.

Cast-in-drilled-hole concrete piling (rock socket) shall consist of drilling or coring sockets in bedrock to the depths or lengths specified and filling with reinforced concrete in conformance with the details shown on the plans and these special provisions. Cored holes, if used, shall conform to the provisions of Section 49-4.03, "Drilled Holes," of the Standard Specifications.

The provisions of "Welding" of these special provisions shall not apply to temporary steel casings.

Cast-in-drilled-hole concrete piles 600 mm in diameter or larger may be constructed by excavation and depositing concrete under slurry.

Materials

Concrete deposited under slurry shall have a nominal penetration equal to or greater than 90 mm. Concrete shall be proportioned to prevent excessive bleed water and segregation.

Concrete deposited under slurry shall contain not less than 400 kg of cementitious material per cubic meter.

Attention is directed to "Corrosion Control for Portland Cement Concrete," of these special provisions.

The combined aggregate grading used in concrete for cast-in-drilled-hole concrete piling shall be either the 25-mm maximum grading, the 12.5-mm maximum grading, or the 9.5-mm maximum grading and shall conform to the requirements in Section 90-3 "Aggregate Gradings," of the Standard Specifications.

Mineral Slurry

Mineral slurry shall be mixed and thoroughly hydrated in slurry tanks, and slurry shall be sampled from the slurry tanks and tested before placement in the drilled hole.

Slurry shall be recirculated or continuously agitated in the drilled hole to maintain the specified properties.

Recirculation shall include removal of drill cuttings from the slurry before discharging the slurry back into the drilled hole. When recirculation is used, the slurry shall be sampled and tested at least every 2 hours after beginning its use until tests show that the samples taken from the slurry tank and

from near the bottom of the hole have consistent specified properties. Subsequently, slurry shall be sampled at least twice per shift as long as the specified properties remain consistent.

Slurry that is not recirculated in the drilled hole shall be sampled and tested at least every 2 hours after beginning its use. The slurry shall be sampled mid-height and near the bottom of the hole. Slurry shall be recirculated when tests show that the samples taken from mid-height and near the bottom of the hole do not have consistent specified properties.

Slurry shall also be sampled and tested prior to final cleaning of the bottom of the hole and again just prior to placing concrete. Samples shall be taken from mid-height and near the bottom of the hole. Cleaning of the bottom of the hole and placement of the concrete shall not start until tests show that the samples taken from mid-height and near the bottom of the hole have consistent specified properties.

Mineral slurry shall be tested for conformance to the requirements shown in the following table:

MINERAL SLURRY		
PROPERTY	REQUIREMENT	TEST
Density (kg/m^3) - before placement in the drilled hole - during drilling - prior to final cleaning - immediately prior to placing concrete	1030* to 1110* 1030* to 1200*	Mud Weight (Density) API 13B-1 Section 1
Viscosity (seconds/liter) bentonite attapulgite	29 to 53 29 to 42	Marsh Funnel and Cup API 13B-1 Section 2.2
pH	8 to 10.5	Glass Electrode pH Meter or pH Paper
Sand Content (percent) - prior to final cleaning - immediately prior to placing concrete	less than or equal to 4.0	Sand API 13B-1 Section 5
*When approved by the Engineer, slurry may be used in salt water, and the allowable densities may be increased up to 32 kg/m^3. Slurry temperature shall be at least 4°C when tested.		

Any caked slurry on the sides or bottom of hole shall be removed before placing reinforcement. If concrete is not placed immediately after placing reinforcement, the reinforcement shall be removed and cleaned of slurry, the sides of the drilled hole cleaned of caked slurry, and the reinforcement again placed in the hole for concrete placement.

Synthetic Slurry

Synthetic slurries shall be used in conformance with the manufacturer's recommendations and these special provisions. The following synthetic slurries may be used:

PRODUCT	MANUFACTURER
SlurryPro CDP	KB Technologies Ltd. 3648 FM 1960 West Suite 107 Houston, TX 77068 (800) 525-5237
Super Mud	PDS Company c/o Champion Equipment Company 8140 East Rosecrans Ave. Paramount, CA 90723 (562) 634-8180
Shore Pac GCV	CETCO Drilling Products Group 1350 West Shure Drive Arlington Heights, IL 60004 (847) 392-5800
Novagel Polymer	Geo-Tech Drilling Fluids 220 N. Zapata Hwy, Suite 11A Laredo, TX 78043 (210) 587-4758

Inclusion of a synthetic slurry on the above list may be obtained by meeting the Department's requirements for synthetic slurries. The requirements can be obtained from the Office of Structure Design, P.O. Box 942874, Sacramento, CA 94274-0001.

Synthetic slurries listed may not be appropriate for a given site.

Synthetic slurries shall not be used in holes drilled in primarily soft or very soft cohesive soils as determined by the Engineer.

A manufacturer's representative, as approved by the Engineer, shall provide technical assistance for the use of their product, shall be at the site prior to introduction of the synthetic slurry into a drilled hole, and shall remain at the site until released by the Engineer.

Synthetic slurries shall be sampled and tested at both mid-height and near the bottom of the drilled hole. Samples shall be taken and tested during drilling as necessary to verify the control of the properties of the slurry. Samples shall be taken and tested when drilling is complete, but prior to final cleaning of the bottom of the hole. When samples are in conformance with the requirements shown in the following tables for each slurry product, the bottom of the hole shall be cleaned and any loose or settled material removed. Samples shall be obtained and tested after final cleaning and immediately prior to placing concrete.

SlurryPro CDP synthetic slurries shall be tested for conformance to the requirements shown in the following table:

SLURRYPRO CDP KB Technologies Ltd.		
PROPERTY	REQUIREMENT	TEST
Density (kg/m^3) - during drilling - prior to final cleaning - just prior to placing concrete	 less than or equal to 1075* less than or equal to 1025*	Mud Weight (Density) API 13B-1 Section 1
Viscosity (seconds/liter) - during drilling -prior to final cleaning - just prior to placing concrete	 53 to 127 less than or equal to 74	Marsh Funnel and Cup API 13B-1 Section 2.2
pH	6 to 11.5	Glass Electrode pH Meter or pH Paper
Sand Content (percent) - prior to final cleaning - just prior to placing concrete	 less than or equal to 0.5	Sand API 13B-1 Section 5
*When approved by the Engineer, slurry may be used in salt water, and the allowable densities may be increased up to 32 kg/m^3. Slurry temperature shall be at least 4°C when tested.		

Super Mud synthetic slurries shall be tested for conformance to the requirements shown in the following table:

SUPER MUD PDS Company		
PROPERTY	REQUIREMENT	TEST
Density (kg/m^3) - prior to final cleaning - just prior to placing concrete	less than or equal to 1025*	Mud Weight (Density) API 13B-1 Section 1
Viscosity (seconds/liter) - during drilling - prior to final cleaning - just prior to placing concrete	34 to 64 less than or equal to 64	Marsh Funnel and Cup API 13B-1 Section 2.2
pH	8 to 10.0	Glass Electrode pH Meter or pH Paper
Sand Content (percent) - prior to final cleaning -just prior to placing concrete	less than or equal to 0.5	Sand API 13B-1 Section 5
*When approved by the Engineer, slurry may be used in salt water, and the allowable densities may be increased up to 32 kg/m^3. Slurry temperature shall be at least 4°C when tested.		

Shore Pac GCV synthetic slurries shall be tested for conformance to the requirements shown in the following table:

Shore Pac GCV CETCO Drilling Products Group		
PROPERTY	REQUIREMENT	TEST
Density (kg/m^3) - prior to final cleaning - just prior to placing concrete	less than or equal to 1025*	Mud Weight (Density) API 13B-1 Section 1
Viscosity (seconds/liter) - during drilling - prior to final cleaning - just prior to placing concrete	35 to 78 less than or equal to 60	Marsh Funnel and Cup API 13B-1 Section 2.2
pH	8.0 to 11.0	Glass Electrode pH Meter or pH Paper
Sand Content (percent) - prior to final cleaning -just prior to placing concrete	less than or equal to 0.5	Sand API 13B-1 Section 5
*When approved by the Engineer, slurry may be used in salt water, and the allowable densities may be increased up to 32 kg/m^3. Slurry temperature shall be at least 4°C when tested.		

Novagel Polymer synthetic slurries shall be tested for conformance to the requirements shown in the following table:

NOVAGEL POLYMER Geo-Tech Drilling Fluids		
PROPERTY	REQUIREMENT	TEST
Density (kg/m^3) - during drilling - prior to final cleaning - just prior to placing concrete	 less than or equal to 1075* less than or equal to 1025*	Mud Weight (Density) API 13B-1 Section 1
Viscosity (seconds/liter) - during drilling - prior to final cleaning - just prior to placing concrete	 48 to 110 less than or equal to 110	Marsh Funnel and Cup API 13B-1 Section 2.2
pH	6.0 to 11.5	Glass Electrode pH Meter or pH Paper
Sand Content (percent) - prior to final cleaning -just prior to placing concrete	 less than or equal to 0.5	Sand API 13B-1 Section 5
*When approved by the Engineer, slurry may be used in salt water, and the allowable densities may be increased up to 32 kg/m^3. Slurry temperature shall be at least 4°C when tested.		

Water Slurry

At the option of the Contractor, water may be used as slurry when casing is used for the entire length of the drilled hole.

Water slurry shall be tested for conformance to the requirements shown in the following table:

WATER SLURRY		
PROPERTY	REQUIREMENT	TEST
Density (kg/m^3) - prior to final cleaning - just prior to placing concrete	1017 *	Mud Weight (Density) API 13B-1 Section 1
Sand Content (percent) - prior to final cleaning -just prior to placing concrete	less than or equal to 0.5	Sand API 13B-1 Section 5
*When approved by the Engineer, salt water slurry may be used, and the allowable densities may be increased up to 32 kg/m^3.		

Construction

The Contractor shall submit a placing plan to the Engineer for approval prior to producing the test batch for cast-in-drilled-hole concrete piling and at least 10 working days prior to constructing piling. The plan shall include complete descriptions, details, and supporting calculations as listed below:

A. Requirements for all cast-in-drilled hole concrete piling:

1. Concrete mix design, certified test data, and trial batch reports.
2. Drilling or coring methods and equipment.
3. Proposed method for casing installation and removal when necessary.
4. Plan view drawing of pile showing reinforcement and inspection pipes, if required.
5. Methods for placing, positioning, and supporting bar reinforcement.
6. Methods and equipment for accurately determining the depth of concrete and actual and theoretical volume placed, including effects on volume of concrete when any casings are withdrawn.
7. Methods and equipment for verifying that the bottom of the drilled hole is clean prior to placing concrete.
8. Methods and equipment for preventing upward movement of reinforcement, including the Contractor's means of detecting and measuring upward movement during concrete placement operations.

B. Additional requirements when concrete is placed under slurry:

1. Concrete batching, delivery, and placing systems, including time schedules and capacities therefor. Time schedules shall include the time required for each concrete placing operation at each pile.
2. Concrete placing rate calculations. When requested by the Engineer, calculations shall be based on the initial pump pressures or static head on the concrete and losses throughout the placing system, including anticipated head of slurry and concrete to be displaced.

3. Suppliers' test reports on the physical and chemical properties of the slurry and any proposed slurry chemical additives, including Material Safety Data Sheet.
4. Slurry testing equipment and procedures.
5. Methods of removal and disposal of excavation, slurry, and contaminated concrete, including removal rates.
6. Methods and equipment for slurry agitating, recirculating, and cleaning.

In addition to compressive strength requirements, the consistency of the concrete to be deposited under slurry shall be verified before use by producing a test batch. The test batch shall be produced and delivered to the project under conditions and in time periods similar to those expected during the placement of concrete in the piles. Concrete for the test batch shall be placed in an excavated hole or suitable container of adequate size to allow for testing as specified herein. Depositing of test batch concrete under slurry will not be required. In addition to meeting the specified nominal penetration, the test batch shall meet the following requirements:

A. For piles where the time required for each concrete placing operation, as submitted in the placing plan, will be 2 hours or less, the test batch shall demonstrate that the proposed concrete mix design achieves either a penetration of at least 50 mm or a slump of at least 125 mm after twice that time has elapsed.
B. For piles where the time required for each concrete placing operation, as submitted in the placing plan, will be more than 2 hours, the test batch shall demonstrate that the proposed concrete mix design achieves either a penetration of at least 50 mm or a slump of at least 125 mm after that time plus 2 hours has elapsed.

The time period shall begin at the start of placement. The concrete shall not be vibrated or agitated during the test period. Penetration tests shall be performed in conformance with the requirements in California Test 533. Slump tests shall be performed in conformance with the requirements in ASTM Designation: C 143. Upon completion of testing, the concrete shall be disposed of in conformance with the provisions in Section 7-1.13, "Disposal of Material Outside the Highway Right of Way," of the Standard Specifications.

The concrete deposited under slurry shall be carefully placed in a compact, monolithic mass and by a method that will prevent washing of the concrete. Concrete deposited under slurry need not be vibrated. Placing concrete shall be a continuous operation lasting not more than the time required for each concrete placing operation at each pile, as submitted in the placing plan, unless otherwise approved in writing by the Engineer. The concrete shall be placed with concrete pumps and delivery tube system of adequate number and size to complete the placing of concrete in the time specified. The delivery tube system shall consist of one of the following:

A. A tremie tube or tubes, each of which are at least 250 mm in diameter, fed by one or more concrete pumps.
B. One or more concrete pump tubes, each fed by a single concrete pump.

The delivery tube system shall consist of watertight tubes with sufficient rigidity to keep the ends always in the mass of concrete placed. If only one delivery tube is utilized to place the concrete, the tube shall be placed near the center of the drilled hole. Multiple tubes shall be uniformly spaced in

the hole. Internal bracing for the steel reinforcing cage shall accommodate the delivery tube system. Tremies shall not be used for piles without space for a 250-mm tube.

Spillage of concrete into the slurry during concrete placing operations shall not be allowed. Delivery tubes shall be capped with a watertight cap, or plugged above the slurry level with a good quality, tight fitting, moving plug that will expel the slurry from the tube as the tube is charged with concrete. The cap or plug shall be designed to be released as the tube is charged. The pump discharge or tremie tube shall extend to the bottom of the hole before charging the tube with concrete. After charging the delivery tube system with concrete, the flow of concrete through a tube shall be induced by slightly raising the discharge end. During concrete placement, the tip of the delivery tube shall be maintained as follows to prevent reentry of the slurry into the tube. Until at least 3 m of concrete has been placed, the tip of the delivery tube shall be within 150 mm of the bottom of the drilled hole, and then the embedment of the tip shall be maintained at least 3 m below the top surface of the concrete. Rapid raising or lowering of the delivery tube shall not be permitted. If the seal is lost or the delivery tube becomes plugged and must be removed, the tube shall be withdrawn, the tube cleaned, the tip of the tube capped to prevent entrance of the slurry, and the operation restarted by pushing the capped tube 3 m into the concrete and then reinitiating the flow of concrete.

When slurry is used, a fully operational standby concrete pump, adequate to complete the work in the time specified, shall be provided at the site during concrete placement. The slurry level shall be maintained within 300 mm of the top of the drilled hole.

A log of concrete placement for each drilled hole shall be maintained by the Contractor when concrete is deposited under slurry. The log shall show the pile location, tip elevation, dates of excavation and concrete placement, total quantity of concrete deposited, length and tip elevation of any casing, and details of any hole stabilization method and materials used. The log shall include a 215 mm x 280 mm sized graph of the concrete placed versus depth of hole filled. The graph shall be plotted continuously throughout placing of concrete. The depth of drilled hole filled shall be plotted vertically with the pile tip oriented at the bottom and the quantity of concrete shall be plotted horizontally. Readings shall be made at least at each 1.5 m of pile depth, and the time of the reading shall be indicated. The graph shall be labeled with the pile location, tip elevation, cutoff elevation, and the dates of excavation and concrete placement. The log shall be delivered to the Engineer within one working day of completion of placing concrete in the pile.

After placing reinforcement and prior to placing concrete in the drilled hole, if drill cuttings settle out of the slurry, the bottom of the drilled hole shall be cleaned. The Contractor shall verify that the bottom of the drilled hole is clean.

If temporary casing is used, concrete placed under slurry shall be maintained at a level at least 1.5 m above the bottom of the casing. The withdrawal of casings shall not cause contamination of the concrete with slurry.

Material resulting from using slurry shall be disposed of in conformance with the provisions in Section 7-1.13, "Disposal of Material Outside the Highway Right of Way," of the Standard Specifications.

Acceptance Testing and Mitigation

Vertical inspection pipes for acceptance testing shall be provided in all cast-in-drilled-hole concrete piles that are larger than 600 mm in diameter, except when the holes are dry or when the holes are dewatered without the use of temporary casing to control ground water.

Inspection pipes shall be Schedule 40 polyvinyl chloride pipes with a nominal inside diameter of 50 mm. Each inspection pipe shall be capped top and bottom and shall have watertight couplers to provide a clean, dry and unobstructed 50-mm diameter clear opening from 1.0 m above the pile cutoff down to the bottom of the reinforcing cage.

If the Contractor drills the hole below the specified tip elevation, the reinforcement and the inspection pipes shall be extended to 75 mm clear of the bottom of the drilled hole.

Inspection pipes shall be placed around the pile, inside the outermost spiral or hoop reinforcement, and 75 mm clear of the vertical reinforcement, at a uniform spacing not exceeding 840 mm measured along the circle passing through the centers of inspection pipes. A minimum of 2 inspection pipes per pile shall be used. When the vertical reinforcement is not bundled and each bar is not more than 26 mm in diameter, inspection pipes may be placed 50 mm clear of the vertical reinforcement. The inspection pipes shall be placed to provide the maximum diameter circle that passes through the centers of the inspection pipes while maintaining the clear spacing required herein. The pipes shall be installed in straight alignment, parallel to the main reinforcement, and securely fastened in place to prevent misalignment during installation of the reinforcement and placing of concrete in the hole.

The Contractor shall log the location of the inspection pipe couplers with respect to the plane of pile cut off, and these logs shall be delivered to the Engineer upon completion of the placement of concrete in the drilled hole.

After placing concrete and before requesting acceptance tests, each inspection pipe shall be tested by the Contractor in the presence of the Engineer by passing a 48.3-mm diameter rigid cylinder 610 mm long through the complete length of pipe. If the 48.3-mm diameter rigid cylinder fails to pass any of the inspection pipes, the Contractor shall attempt to pass a 32.0-mm diameter rigid cylinder 1.375 m long through the complete length of those pipes in the presence of the Engineer. If an inspection pipe fails to pass the 32.0-mm diameter cylinder, the Contractor shall immediately fill all inspection pipes in the pile with water.

The Contractor shall replace each inspection pipe that does not pass the 32.0-mm diameter cylinder with a 50.8-mm diameter hole cored through the concrete for the entire length of the pile. Cored holes shall be located as close as possible to the inspection pipes they are replacing and shall be no more than 150 mm inside the reinforcement. Coring shall not damage the pile reinforcement. Cored holes shall be made with a double wall core barrel system utilizing a split tube type inner barrel. Coring with a solid type inner barrel will not be allowed. Coring methods and equipment shall provide intact cores for the entire length of the pile concrete. The coring operation shall be logged by an Engineering Geologist or Civil Engineer licensed in the State of California and experienced in core logging. Coring logs shall include complete descriptions of inclusions and voids encountered during coring, and shall be delivered to the Engineer upon completion. Concrete cores shall be preserved, identified with the exact location the core was recovered from within the pile, and made available for inspection by the Engineer.

Acceptance tests of the concrete will be made by the Engineer, without cost to the Contractor. Acceptance tests will evaluate the homogeneity of the placed concrete. Tests will include gamma-gamma logging. Tests may also include crosshole sonic logging and other means of inspection selected by the Engineer. The Contractor shall not conduct operations within 8.0 m of the gamma-gamma logging operations. The Contractor shall separate reinforcing steel as necessary to allow the Engineer access to the inspection pipes to perform gamma-gamma logging or other acceptance testing. After requesting acceptance tests and providing access to the piling, the Contractor shall allow 3 weeks for the Engineer to conduct these tests and make determination of acceptance if the

48.3-mm diameter cylinder passed all inspection pipes, and 4 weeks if only the 32.0-mm diameter cylinder passed all inspection pipes. Should the Engineer fail to complete these tests within the time allowance, and if in the opinion of the Engineer, the Contractor's controlling operation is delayed or interfered with by reason of the delay in inspection, the delay will be considered a right of way delay as specified in Section 8-1.09, "Right of Way Delays," of the Standard Specifications.

All inspection pipes and cored holes in a pile shall be dewatered and filled with grout after notification by the Engineer that the pile is acceptable. Placement and removal of water in the inspection pipes shall be at the Contractor's expense. Grout shall conform to the provisions in Section 50-1.09, "Bonding and Grouting," of the Standard Specifications. The inspection pipes and holes shall be filled using grout tubes that extend to the bottom of the pipe or hole or into the grout already placed.

If acceptance testing performed by the Engineer determines that a pile does not meet the requirements of the specifications, then that pile will be rejected and all depositing of concrete under slurry or concrete placed using temporary casing for the purpose of controlling groundwater shall be suspended until written changes to the methods of pile construction are approved in writing by the Engineer.

The Contractor shall submit to the Engineer for approval a mitigation plan for repair, supplementation, or replacement for each rejected cast-in-drilled-hole concrete pile, and this plan shall conform to the provisions in Section "Working drawings," of these special provisions. Prior to submitting this mitigation plan, the Engineer will hold a repair feasibility meeting with the Contractor to discuss the feasibility of repairing rejected piling. The Engineer will consider the size of the defect, the location of the defect, and the design information and corrosion protection considerations for the pile. This information will be made available to the Contractor, if appropriate, for the development of the mitigation plan. If the Engineer determines that it is not feasible to repair the rejected pile, the Contractor shall not include repair as a means of mitigation and shall proceed with the submittal of a mitigation plan for replacement or supplementation of the rejected pile.

If the Engineer determines that a rejected pile does not require mitigation due to structural, geotechnical, or corrosion concerns, the Contractor may elect to 1) repair the pile per the approved mitigation plan, or 2) not repair anomalies found during acceptance testing of that pile. For such unrepaired piles, the Contractor shall pay to the State, $400 per cubic meter for the portion of the pile affected by the anomalies. The volume, in cubic meters, of the portion of the pile affected by the anomalies, shall be calculated as the area of the cross-section of the pile affected by each anomaly, in square meters, as determined by the Engineer, multiplied by the distance, in meters, from the top of each anomaly to the specified tip of the pile. If the volume calculated for one anomaly overlaps the volume calculated for additional anomalies within the pile, the calculated volume for the overlap shall only be counted once. In no case shall the amount of the payment to the State for any such pile be less than $400. The Department may deduct the amount from any moneys due, or that may become due the Contractor under the contract.

Pile mitigation plans shall include the following:

A. The designation and location of the pile addressed by the mitigation plan.
B. A review of the structural, geotechnical, and corrosion design requirements of the rejected pile.
C. A step by step description of the mitigation work to be performed, including drawings if necessary.

D. An assessment of how the proposed mitigation work will address the structural, geotechnical, and corrosion design requirements of the rejected pile.
E. Methods for preservation or restoration of existing earthen materials.
F. A list of affected facilities, if any, with methods and equipment for protection of these facilities during mitigation.
G. The State assigned contract number, bridge number, full name of the structure as shown on the contract plans, District-County-Route-Kilometer Post, and the Contractor's (and Subcontractor's if applicable) name on each sheet.
H. A list of materials, with quantity estimates, and personnel, with qualifications, to be used to perform the mitigation work.
I. The seal and signature of an engineer who is licensed as a Civil Engineer by the State of California.

For rejected piles to be repaired, the Contractor shall submit a pile mitigation plan that contains the following additional information:

A. An assessment of the nature and size of the anomalies in the rejected pile.
B. Provisions for access for additional pile testing if required by the Engineer.

For rejected piles to be replaced or supplemented, the Contractor shall submit a pile mitigation plan that contains the following additional information:

A. The proposed location and size of additional piling.
B. Structural details and calculations for any modification to the structure to accommodate the replacement or supplemental piling.

All provisions for cast-in-drilled-hole concrete piling shall apply to replacement piling.

The Contractor shall allow the Engineer 3 weeks to review the mitigation plan after a complete submittal has been received.

Should the Engineer fail to review the complete pile mitigation submittal within the time specified, and if, in the opinion of the Engineer, the Contractor's controlling operation is delayed or interfered with by reason of the delay in reviewing the pile mitigation plan, an extension of time commensurate with the delay in completion of the work thus caused will be granted in conformance with the provisions in Section 8-1.09, "Right of Way Delays," of the Standard Specifications.

When repairs are performed, the Contractor shall submit a mitigation report to the Engineer within 10 days of completion of the repair. This report shall state exactly what repair work was performed and quantify the success of the repairs relative to the submitted mitigation plan. The mitigation report shall be stamped and signed by an engineer that is licensed as a Civil Engineer by the State of California. The mitigation report shall show the State assigned contract number, bridge number, full name of the structure as shown on the contract plans, District-County-Route-Kilometer Post, and the Contractor (and Subcontractor if applicable) name on each sheet. The Engineer will be the sole judge as to whether a mitigation proposal is acceptable, the mitigation efforts are successful, and to whether additional repairs, removal and replacement, or construction of a supplemental foundation is required.

MEASUREMENT AND PAYMENT (PILING)

Measurement and payment for the various types and classes of piles shall conform to the provisions in Sections 49-6.01, "Measurement," and 49-6.02, "Payment," of the Standard Specifications and these special provisions.

Payment for cast-in-place concrete piling shall conform to the provisions in Section 49-6.02, "Payment," of the Standard Specifications and these special provisions except that, when the diameter of cast-in-place concrete piling is shown on the plans as 600 mm or larger, reinforcement in the piling will be paid for by the kilogram as bar reinforcing steel (bridge).

Full compensation for slurry, depositing concrete under slurry, test batches, inspection pipes, filling inspection holes and pipes with grout, drilling oversized cast-in-drilled-hole concrete piling, filling cave-ins and oversized piles with concrete, and redrilling through concrete, shall be considered as included in the contract lump sum price paid for this contract change order 64 work involved, including all supplements, per meter for cast-in-drilled-hole concrete piling of the types and sizes listed in the Engineer's Estimate, and no additional compensation will be allowed therefor.

The contract price paid per meter for cast-in-drilled-hole concrete piling (rock socket) of the sizes listed in the Engineer's Estimate shall include full compensation for furnishing all labor, materials, tools, equipment, and incidentals, and for doing all the work involved in drilling or coring holes, disposing of the material resulting from drilling or coring holes, and furnishing and placing concrete , complete in place, to the required penetration, as shown on the plans, as specified in the Standard Specifications and these special provisions, and as directed by the Engineer. Reinforcement in cast-in-drilled-hole concrete piling (rock socket) will be paid for by the kilogram as bar reinforcement steel (bridge).

When the elevation of the moderately hard rock surface is lower than anticipated on the bridge plans, the additional cast-in-drilled-hole concrete piling, including inspection pipes, and bar reinforcing steel, required to maintain the length of cast-in-drilled-hole concrete piling (rock socket) into bedrock, as shown on the plans, will be paid for as extra work as provided in Section 4-1.03D, "Extra Work," of the Standard Specifications.

When the elevation of the moderately hard rock surface is higher than anticipated on the bridge plans, the additional rock drilling or coring, required to extend the piling to the specified tip elevation, as shown on the plans, will be paid for as extra work as provided in Section 4-1.03D, "Extra Work," of the Standard Specifications.

Full compensation for conforming to the provisions in "Steel Pipe Piling" and "Nondestructive Testing" of these special provisions shall be considered as included in the contract lump sum price paid for this contract change order 64 work involved, including all supplements, and no additional compensation will be allowed therefor.

10-1.25 TIEDOWN ANCHORS

Tiedown anchors in bridge footings; consisting of steel bar tendons with anchorage assemblies that are grouted in cored, formed, and drilled holes; shall conform to the provisions in Section 50, "Prestressing Concrete," of the Standard Specifications, these special provisions, and the details shown on the plans.

Whenever "member" is referred to in Section 50, "Prestressing Concrete," of the Standard Specifications it shall be considered to mean tiedown anchor.

Foundation recommendations are included in the "Materials Information" available to the Contractor in conformance with the provisions in Section 2-1.03, "Examination of Plans, Specifications, Contract, and Site of Work," of the Standard Specifications.

Difficult tiedown installation is anticipated due to the presence of caving soils, hazardous and contaminated materials, high ground water, cobbles and boulders, subsurface concrete debris, rock cuttings, timber piles, low overhead clearance, underground utilities, overhead utilities, and the requirements of tiedown embedment into rock.

The Contractor shall determine the bond length necessary to meet acceptance criteria specified herein.

The submittal of microfilms will not be required for tiedown anchor installations.

Alternative details for the anchorage enclosure device may be submitted to the Engineer for approval if necessary to accommodate the anchorage assembly being used.

MATERIALS

The steel tube and bearing plate of the anchorage assembly shall conform to the provisions of Section 75-1.03, "Miscellaneous Bridge Metal," of the Standard Specifications. The steel tube and bearing plate shall be galvanized after fabrication.

Grout shall conform to the provisions in Section 50-1.09, "Bonding and Grouting," of the Standard Specifications. The grout will not be required to pass through a screen with a 1.7 mm maximum clear opening prior to being introduced into the grout pump. Fine aggregate may be added to the grout mixture of portland cement and water outside of the grouted sheathing in drilled holes that are 200 mm or greater in diameter, but only to the extent that the cement content of the grout is not less than 500 kg/m^3 of grout. Fine aggregate, if used, shall conform to the provisions in Section 90-2, "Materials," and Section 90-3, "Aggregate Gradings," of the Standard Specifications.

When a bond breaker is shown on the plans near the bearing plate, the bond breaker shall be a 6 mm premolded joint filler conforming to the provisions in Section 51-1.12C, "Premolded Expansion Joint Fillers," of the Standard Specifications.

Smooth and corrugated plastic sheathing, including joints, shall be watertight. Polyvinyl chloride (PVC) sheathing shall conform to ASTM Designation: D 1784, Class 13464-B. High density polyethylene (HDPE) sheathing shall have a density between 0.940 and 0.960-g/cm^3 as measured in accordance with ASTM Designation: D 792, A-2. Corrugated plastic sheathing shall be PVC or HDPE.

The transition between the corrugated plastic sheathing and the anchorage assembly shall be an approved detail that allows stressing to the design force without evidence of distress in the corrugated plastic sheathing.

Corrugated sheathing for bar tendons shall have a nominal wall thickness of 1.0 mm.

Strand type tendons shall not be used.

CONSTRUCTION

Tiedown anchors shall be installed in accordance with the manufacturer's recommendations. In case of a conflict between the manufacturer's recommendations and these special provisions, these special provisions shall prevail.

Water and grout from tiedown anchor construction operations shall not be permitted to fall on public traffic, to flow across shoulders or lanes occupied by public traffic, or to flow into

landscaping, gutters, or other drainage facilities. Excessive amounts of water shall not be used in any of the drilling and the tiedown anchor installation procedures.

The holes drilled in the foundation materials shall be drilled to a depth sufficient to provide the necessary bond length beyond the minimum unbonded length shown on the plans. The diameter of the hole shall be large enough to provide a minimum of 25 mm grout cover over the corrugated plastic sheathing for the full-length of the tendon. Centralizers shall be used full-length of the tendon.

Tiedown anchor holes in foundation material shall be drilled by either the rotary or percussion drilling method.

Prior to installing each tiedown anchor into the anchor hole, the anchor shall be clean and free of oil, grease, dirt, or other extraneous substance.

The transition between the corrugated plastic sheathing and the anchorage assembly shall be an approved detail that allows stressing to the design force without evidence of distress in the corrugated plastic sheathing.

Tiedown anchor steel shall be protected prior to completion of all grouting against rust, corrosion, and physical damage in conformance with the provisions in Section 50, "Prestressing Concrete," of the Standard Specifications. In addition, there shall be no evidence of distress in the plastic sheathing or crushing of the cement grout within the sheathing.

Pregrouting shall occur at least 48 hours before placing the tendon in the drilled hole.

Tiedown anchor grout placed in the drilled hole shall be placed using grout tubes.

Grout for all stages shall be injected at the low end of the void being filled and shall be expelled at the high end until there is no evidence of entrapped air, water, or diluted grout.

After initial grouting, the tiedown anchor shall remain undisturbed until the grout has reached a strength sufficient to provide anchorage during load testing.

Secondary grouting shall be completed after the tiedown anchor has been locked off at the required load.

The bar tendons in the unbonded area shall be sheathed with smooth plastic that extends into the steel tube of the permanent tiedown anchorage assembly, as shown on the plans. For this portion of smooth sheathing there is no minimum wall thickness and the sheathing shall be either PVC or HDPE.

In addition, bar tendons shall be sheathed full-length with corrugated plastic where shown on the plans. The annular space between the bar and the corrugated sheathing shall be pregrouted prior to placing the tendons in the drilled hole.

There shall be a seal between the smooth sheathing and the corrugated sheathing at the top and bottom of the length of smooth sheathing.

For bar tendons, the initial grout in the drilled hole may be placed before or after insertion of the bar tendons.

For drilled holes 150 mm in diameter or less, the initial grouting outside of the corrugated plastic sheathing shall extend to 600 mm below the end of the steel tube of the anchorage assembly. For drilled holes greater than 150 mm in diameter the initial grouting outside of the corrugated plastic sheathing shall be within the limits of the bonded length.

Testing

All tiedowns shall be load tested by either a performance test or a proof test. The magnitude of applied test loads shall be determined with a calibrated pressure gauge or a load cell. Movements of the end of the tiedown anchor, relative to an independent fixed reference point, shall be measured

and recorded to the nearest 0.025-mm at each load increment during the load tests. The Contractor shall perform the measuring and recording.

At the completion of testing tiedown anchors, or when requested by the Engineer, the Contractor shall furnish to the Engineer complete test results for each tiedown anchor tested. Data for each test shall list key personnel, test loading equipment, tiedown anchor location, hole diameter, method of drilling, and bonded and unbonded length of tiedown anchor. Test data shall also list quantity of grout and grout pressure used within the bonded length of the tiedown anchor, amount of ground water encountered, the time and dates of drilling, tiedown anchor installation, grouting, and testing. The tiedown anchor end movements at each increment of load or at each increment of time during the load hold period of the loading schedule shall be included in the test data.

Load testing shall be performed against temporary bearing yokes that bear directly against the permanent bearing plate. Tiedown anchors shall not be stressed against new footing concrete until the concrete has attained a compressive strength of 18 MPa. Temporary yokes shall remain the property of the Contractor.

A minimum of 10 percent of the total number of tiedown anchors, but not less than two anchors shall be performance tested at each footing. The Engineer shall determine the location of the tiedown anchors to be performance tested.

The performance test or proof test shall be conducted by measuring the test load applied to the tiedown anchor and recording the tiedown anchor end movement (measured at the end of the tiedown anchor) during incremental loading and unloading the tiedown anchor in accordance with the loading schedule. The test load shall be held constant for 10 minutes. During the load hold, the movement of the end of the tiedown anchor shall be measured at 1, 2, 3, 4, 5, 6, and 10 minutes. If the total recorded movement between one minute and 10 minutes exceeds 1.0 mm, the test load shall be held for an additional 50 minutes. Total movement shall be measured at 15, 20, 25, 30, 45, and 60 minutes. If the load is held for 60 minutes, a creep curve showing the creep movement between one minute and 60 minutes shall be plotted as a function of the logarithm of time.

LOADING SCHEDULES		
PERFORMANCE TEST		PROOF TEST
	(CONT'D)	
AL	AL	AL
0.25T	0.25T	0.25T
AL	0.50T	0.50T
0.25T	0.75T	0.75T
0.50T	1.00T	1.00T
AL	1.25T	1.25T
0.25T	AL	1.50T (TEST LOAD)
0.50T	0.25T	AL
0.75T	0.50T	
AL	0.75T	
0.25T	1.00T	
0.50T	1.25T	
0.75T	1.50T (TEST LOAD)	
1.00T (CONT'D)	AL	
T = Design force for the anchor shown on the plans		
AL = Alignment load		

For performance and proof tests, each increment of load shall be applied in less than one minute and held for at least one minute but not more than 2 minutes or as specified above. The observation period for the load hold shall start when the pump begins to apply the last increment of load.

The jacking equipment, including the tiedown anchor movement measuring system, shall be stable during all phases of the tiedown anchor loading operations.

All tiedown anchors not performance tested shall be proof tested. If 1.5 times the design force cannot be obtained, the tiedown anchor shall be replaced. Tiedown anchors shall not be retested unless the tiedown bond length is post-grouted after the unacceptable test.

A performance tested or proof tested tiedown anchor shall conform to the following acceptance criteria:

A. The measured elastic movement of the end of the tiedown tendon exceeds 0.80 of the theoretical elongation of the unbonded length plus the jacking length at the maximum test load; and
B. The creep movement of the end of the tiedown anchor, between one and 10 minutes, is less than 1.0 mm.

Lock-off

After successful testing of the tiedown anchors, the tiedown anchors shall be locked off at the force shown on the plans. The lock-off force is the load on the jacks that is maintained while the tiedown anchor head or anchor nuts on the tiedown anchor are permanently set. Immediately after lock-off, a lift-off test shall be performed to demonstrate that the specified lock-off force was obtained. Adjustments in the shim thickness shall be made if required to achieve the specified lock-off force.

After lock-off, the grout shall be extended to the secondary grout level shown on the plans. At least 24 hours after the secondary grout has set, the remaining void in the steel tube and bearing plate shall be filled with grout. Grout shall be injected at the low end and expelled at the high end until there is no evidence of entrapped air or water. A minimum grout head of 600 mm shall be maintained until the grout has set.

MEASUREMENT AND PAYMENT

No payment will be made for tiedown anchors that do not pass the specified testing requirements.

Tiedown anchors will be measured and paid for by the unit, and the number for payment will be determined by the requirements of the details shown on the plans.

The contract unit price paid for tiedown anchor shall include full compensation for furnishing all labor, materials, tools, equipment, and incidentals, and for doing all the work involved in constructing the tiedown anchors (including testing), complete in place, as shown on the plans, as specified in the Standard Specifications and these special provisions, and as directed by the Engineer.

10-1.25 CONCRETE STRUCTURES

Portland cement concrete structures shall conform to the provisions in Section 51, "Concrete Structures," of the Standard Specifications and these special provisions.

Shotcrete shall not be used as an alternative construction method for reinforced concrete members unless otherwise specified.

In particularly congested areas of the structures, such as the columns, a maximum combined aggregate grading of 12.5-mmconforming to the requirements in Section 90-3, "Aggregate Gradings," of the Standard Specifications may be used when approved by the Engineer.

MASS CONCRETE

Mass concrete shall conform to the requirements of Section 90, "Portland Cement Concrete," of the Standard Specifications and these special provisions. Mass concrete construction shall include modeling, providing temperature control and monitoring during placement.

Components listed in the table below shall be considered mass concrete:

Location	Mass Concrete Components
Bents W3L, W4L, W5L, W6L, W3R, W4R, W5R, W6R (North), and Bent 7	Footing

The Contractor shall control the internal and surface temperature of mass concrete during curing in accordance with the Thermal Control Plan specified herein. Temperature modeling and temperature monitoring is required for the placement of mass concrete. The maximum internal temperature of the mass concrete once placed shall not exceed 65°C and the maximum temperature difference between any surface of the mass concrete and the calculated hottest point will be controlled as described in the Thermal Control Plan.

The concrete temperature shall be monitored by thermocouples or other temperature sensors placed into the concrete, as required in the Thermal Control Plan. Use of ice, liquid nitrogen, insulated curing blankets, insulated forms, cooling pipes and other measures may be necessary to satisfy the temperature requirements.

Materials

Cementitious material for mass concrete may be a combination of mineral admixture conforming to Section 90-2.04 of the Standard Specifications and portland cement or a combination of slag cement mineral admixture conforming to Grade 100 or 120 of ASTM Designation: C989 and portland cement.

The cement content for mass concrete not containing slag cement mineral admixtures shall be a minimum of 50 percent by mass, and the content of mineral admixture conforming to Section 90-2.04 of the Standard Specifications shall be a maximum of 50 percent by mass, of the cementitious material content.

The cement content for mass concrete containing a slag cement mineral admixture shall be a minimum of 40 percent by mass, and the content of slag cement mineral admixture shall be from 40 percent to 60 percent by mass of the total cementitious material to be used in the mix.

Whenever the cementitious material content of mass concrete is composed of more than 35% mineral admixture by mass as provided in these special provisions, an additional 62 days will be allowed to obtain the specified compressive strength shown on the plans.

Thermal Control Plan

Prior to commencing any mass concrete placement, the Contractor shall submit a Thermal Control Plan with design calculations in conformance with the provisions in "Working Drawings" of these special provisions to the Engineer for approval for each mass concrete structure component. The number of sets of the Thermal Control Plan and design calculations shall be the same as those specified for falsework working drawings in Section 51-1.06A, "Falsework Design and Drawings," of the Standard Specifications. After the final Thermal Control Plan is submitted, the Contractor shall allow the Engineer 20 working days for review and acceptance. The Thermal Control Plan shall be based on the design assumption that cracking of the concrete as a result of heat of hydration shall not occur. Analysis shall be performed to determine the maximum allowable temperature differentials between the hottest point of the concrete and the exterior faces. The Thermal Control Plan shall include the following:

A. Mix design.
B. Duration and method of curing.
C. Procedures to control concrete temperature at time of placement.
D. Methods of controlling temperature differentials.
E. Temperature sensor types and locations.
F. Temperature monitoring and recording system.
G. Dimensions of each typical mass concrete placement, including all locations in the structure to be represented by that placement.
H. Types and dimensions of materials to be used for mass concrete forms and insulation, and time frames for when the concrete forms and insulation will be removed, including time periods for removal and reinstallation of insulation where required as part of the thermal control plan
I. Assumptions for average ambient air and average surface rock temperature for time period of placement and curing of each typical mass concrete element.
J. If multiple lifts with time delay are proposed, provide lift height and define time delay between lifts.
K. Include a placing diagram showing the typical mass concrete placement sequence and construction joint locations, if any.
L. Identify areas where steep cooling gradients may occur, and how cracking will be avoided.
M. Predict peak temperature, peak differential temperatures and at what approximate times they will occur.
N. Define allowable time periods for placing or removing insulation and or forms.
O. A summary of the modeling assumptions used in the analysis.
P. Field measures to ensure conformance with the maximum concrete temperature and temperature differential requirements.
Q. Identify contingency operations to be implemented to control the internal temperature of the concrete should the maximum allowable or the maximum allowable differential temperature be exceeded. For post cooling systems after the peak internal temperature is reached, include the maximum cooling rate at which cracking will not occur.

Temperature modeling for each typical placement shall be included with each thermal control plan submittal. As a minimum, the modeling for each typical placement shall consist of performing a two-dimensional finite-difference analysis (see ACI 207.1R-96). The analysis shall be based on the Contractor's actual mix designs. The coefficient of thermal expansion of the concrete used in the modeling shall be determined by testing of the proposed mixes in accordance with US Army Corps of Engineer's Method CRD-C39-81, "Test Method of Coefficient of Linear Thermal Expansion of Concrete." The heat of hydration used in the modeling for the cementitious blend used in the proposed mix designs shall be tested at 1, 3, 7, and 28 days in accordance with the requirements in ASTM Designation: C 186, "Heat of Hydration of Hydraulic Cement".

Construction

Prior to mass concrete placement, an engineer for the Contractor who is registered as a Civil Engineer in the State of California shall inspect and test the temperature monitoring and recording system. The Contractor's registered engineer shall be present at the jobsite when the mass concrete operation is in progress and shall report to the Engineer in writing on a daily basis the progress of the operation. A copy of the daily report shall be available at the jobsite.

If the Contractor elects to use a mechanical cooling system, the mechanical cooling system shall be designed in conformance with the Thermal Control Plan and the following requirements:

A. The mechanical cooling system shall be embedded within mass concrete elements and surface connections to cooling pipes shall be removable to a depth of 100 mm from the surface.
B. Aluminum, copper, or any other dissimilar metal that can cause a corrosion cell with the steel reinforcing shall not be used as cooling pipes.
C. Forms shall be designed so that removal of the forms shall not disrupt the cooling or temperature monitoring.
D. Cooling pipes shall not break or deform during mass concrete placement and shall be secured to prevent movement. Damaged cooling pipes shall be removed and replaced immediately.
E. The mechanical cooling system shall be pressure tested in the presence of the Engineer at 120 percent of the maximum service pressure. The test pressure shall be held for 15 minutes. All leaks shall be repaired and the cooling pipe system shall be retested by the Contractor until the system is free of leaks.
F. After cooling is completed the cooling water shall be discharged and the cooling pipes shall be thoroughly flushed with potable water. Cooling water and wash water shall be discharged in conformance with "Non-Storm Water Discharges" of these special provisions.
G. After the mechanical cooling system is no longer needed the cooling pipes shall be fully grouted under pressure with a nonshrink grout mixture in conformance with ASTM Designation: C 1107 and ASTM Designation: C 827 for 0.0 percent shrinkage, and 0.0 percent minimum and 4.0 percent maximum expansion. The placement of nonshrink grout shall be in conformance with the manufacturer's recommendations.
H. After surface connections to the cooling pipes are removed, the holes shall be reamed and filled with mortar conforming to Section 51-1.135, "Mortar," of the Standard Specifications.

The Contractor may use seawater as cooling water provided that the final temperature of the seawater before discharging back into the bay does not exceed the permit requirements. Holding tanks may be used to cool the water to the required temperature before discharging back into the bay.

The Contractor shall house the pump intake in a manner that prevents injury to fish or other aquatic species and prevent fish entrapment.

Temperature sensors shall be located such that the maximum temperature difference within a mass concrete element can be monitored. As a minimum, the concrete temperature shall be monitored at the calculated hottest point of the concrete, on at least two vertical faces, two corners, and at the center of the top and bottom faces of each pour. For all mass concrete placements, air temperature shall be measured and recorded. If a post-cooling system is used, inlet and outlet water temperatures shall be measured and recorded. The outlet sensors shall be placed within 75 mm of the concrete surface.

Temperature readings shall be automatically recorded on an hourly basis. A redundant set of sensors shall be installed near the primary set. Provision shall be made for recording the redundant set, but records of the redundant sensors need not be made if the primary set is operational. Temperature monitoring may be discontinued when the maximum internal temperature is falling, the maximum allowable temperature difference is greater than the difference between the interior concrete temperature and the average daily temperature for three consecutive days, and there are no mass concrete elements to be cast adjacent.

Methods of concrete consolidation shall prevent damage to the temperature monitoring and recording system. Wiring from thermocouples that must be cast into the concrete shall be protected to prevent movement. Wire runs shall be as short as possible. The ends of the temperature sensors shall not come into contact with either a support or concrete form, or bar reinforcing steel. Temperature monitoring equipment shall be capable of printing and storing data and shall be able to download monitoring data to a computer. Data shall be downloaded and submitted daily to the Engineer.

After the mass concrete pour has been topped out and finished, it shall be revibrated and refinished. Revibration shall extend below the top mat of reinforcement and shall be done as late as the concrete will again respond to vibration. For concrete pours without top reinforcement, revibration shall extend to a depth of 150 mm.

During monitoring, should the specified maximum internal temperature of the mass concrete be exceeded or the maximum allowable temperature difference between any surface of the mass concrete and the hottest point be exceeded, the Contractor shall take immediate measures to correct the situation as specified in the Thermal Control Plan. At the completion of monitoring, the actual readings for the mass concrete element shall be compared with those predicted by the modeling and a summary report shall be prepared by the Contractor's engineer. The report shall include all supplementary or contingency measures implemented and suggested corrections to any future modeling or monitoring to be performed. The summary report shall contain all the temperature data collected for each instrument, both in hard copy and in digital form on diskette. Digital data shall be in Microsoft Excel format or as otherwise approved by the Engineer. The summary report shall also have the data shown in a graphical format with all instruments for a given mass concrete element shown on the same page with time as the horizontal axis. The summary report shall be submitted within one week of completing the monitoring of the mass concrete element.

Acceptance

Mass concrete shall conform to the concrete acceptance criteria and the following temperature requirements:

A. The maximum allowable temperature of mass concrete shall not exceed 65°C.
B. The maximum temperature differential of mass concrete shall not exceed the requirement as determined in the Thermal Control Plan.

If the Contractor fails to conform to any of the temperature requirements above, the mass concrete elements will be rejected. The rejected mass concrete shall be removed at the Contractor's expense. The Contractor shall modify the Thermal Control Plan and design calculations to correct the problem and resubmit the revised Thermal Control Plan.

The Contractor shall allow the Engineer 2 weeks for review and approval of the revised Thermal Control Plan. Mass concrete placement shall not begin until the Engineer has approved the revised Thermal Control Plan. No extension of time or compensation will be made for any rejected mass concrete element or revisions of the Thermal Control Plan.

The Contractor shall remove all equipment and materials from the mass concrete element and clean the surface for the Engineer to measure the crack intensity. Surface crack intensity will be determined after monitoring shows the maximum internal temperature has dropped to within 5°C of the outer concrete temperature. Cracking shall be considered excessive if a surface crack intensity on any face of a concrete surface where cracks greater than 0.15 mm in width measure more than 1.0 m in cumulative length within any 2 m square area or where individual cracks greater than 0.15 mm in width measure more than 300 mm in length.

In case of excessive cracking, the Contractor shall suspend further work on members of similar size and configuration, submit a written explanation of the thermal cracking and additional steps to be taken in future to eliminate excessive cracking, and submit proposed modifications in writing to the Engineer for review. Concrete placement shall not be resumed until the Engineer approves the proposed modifications.

Cracks greater than 0.15 mm in width shall be repaired. Cracks greater than 0.15 mm in width and longer than 300 mm shall be filled with pressure-injected epoxy. Cracks to be filled shall be cleaned and filled by pressure injection methods so that all portions of the crack are completely filled with epoxy. No repairs shall begin until the Engineer has approved the repair plan.

Core drilling may be necessary, as determined by the Engineer and at the Contractor's expense, to sample and examine the extent of the cracking and crack filling. The minimum depth of core sampling for mass concrete shall be 0.6 m and the number of cores taken per mass concrete element shall be in accordance with ASTM Designation: C 823. Prior to coring, the Contractor shall identify the location of the main reinforcing steel. The holes shall be cored by methods that will not shatter or damage the concrete adjacent to the holes. Water for core drilling operations shall be fresh water. The coring water shall be disposed in conformance with the requirements in "Non-Storm Water Discharges" of these special provisions. Immediately after coring, the concrete cores shall be identified by the Contractor with a description of the core locations and submitted to the Engineer for inspection.

If any reinforcement is cut during coring, coring operations shall be terminated, and the Contractor shall submit to the Engineer for approval, the procedure proposed to repair the cut reinforcement and to prevent further cutting of reinforcement. All cored holes shall be filled with nonshrink grout. Cracks not showing full penetration with epoxy shall be reinjected.

Full compensation for conforming to the above requirements shall be considered as included in the contract lump sum price paid for this contract change order 64 work involved, including all supplements, and no additional compensation will be allowed therefor.

MEASUREMENT AND PAYMENT

Measurement and payment for concrete in structures shall conform to the provisions in Section 51-1.22, "Measurement," and Section 51-1.23, "Payment," of the Standard Specifications and these special provisions.

10-1.26 REINFORCEMENT

Reinforcement shall conform to the provisions in Section 52, "Reinforcement," of the Standard Specifications and these special provisions.

The Department's mechanical splices prequalified list can be found at the following internet site:

http://www.dot.ca.gov/hq/esc/approved_products_list/

The provisions of "Welding Quality Control" of these special provisions shall not apply to resistance butt welding.

MEASUREMENT AND PAYMENT

Measurement and payment for reinforcement in structures shall conform to the provisions in Section 52-1.10, "Measurement," and Section 52-1.11, "Payment," of the Standard Specifications and these special provisions.

Full compensation for couplers as shown on the plans shall be considered as included in the contract lump sum price paid for this contract change order 64 work involved, including all supplements, paid per kilogram for bar reinforcing steel (bridge) and no additional compensation will be allowed therefor.

10-1.27 ROADSIDE SIGNS

Roadside signs shall be furnished and installed at the locations shown on the plans or where designated by the Engineer and in conformance with the provisions in Section 56-2, "Roadside Signs," of the Standard Specifications and these special provisions.

The Contractor shall furnish roadside sign panels in conformance with the provisions in "Furnish Sign" of these special provisions.

Wood posts shall be pressure treated after fabrication in conformance with the provisions in Section 58, "Preservative Treatment of Lumber, Timber and Piling," of the Standard Specifications and AWPA Use Category System: UC4A, Commodity Specification A or B.Type N, Type P, and Type R marker panels mounted on a post with a roadside sign shall be considered to be sign panels and will not be paid for as markers.

10-1.28 FURNISH SIGN

Signs shall be fabricated and furnished in accordance with details shown on the plans, the Traffic Sign Specifications, and these special provisions.

Traffic Sign Specifications for California sign codes are available for review at the Department's internet site:

http://www.dot.ca.gov/hq/traffops/signtech/signdel/specs.htm

Traffic Sign Specifications for signs referenced with Federal MUTCD sign codes can be found in Standard Highway Signs Book, administered by the Federal Highway Administration, which is available for review at the following Internet website:

http://mutcd.fhwa.dot.gov/ser-pubs.htm

Information on cross-referencing California sign codes with the Federal MUTCD sign codes is available at the Department's internet site:

http://www.dot.ca.gov/hq/traffops/signtech/signdel/specs.htm

Temporary or permanent signs shall be free from blemishes that may affect the serviceability and detract from the general sign color and appearance when viewing during daytime and nighttime from a distance of 8 m. The face of each finished sign shall be uniform, flat, smooth, and free of defects, scratches, wrinkles, gel, hard spots, streaks, extrusion marks, and air bubbles. The front, back, and edges of the sign panels shall be free of router chatter marks, burns, sharp edges, loose rivets, delaminated skins, excessive adhesive over spray and aluminum marks.

QUALITY CONTROL FOR SIGNS

The requirements of "Quality Control for Signs" in this section shall not apply to construction area signs.

No later than 14 days before sign fabrication, the Contractor shall submit a written copy of the quality control plan for signs to the Transportation Laboratory, Materials Engineering and Testing Services (METS), Telephone (916) 227-7291. METS will have 10 days to review the quality control plan. Sign fabrication shall not begin until METS approves the Contractor's quality control plan in writing. The Contractor shall submit to the Engineer at least 3 copies of the approved quality control plan. The quality control plan shall include, but not be limited to the following requirements:

1. Identification of the party responsible for quality control of signs,
2. Basis of acceptance for incoming raw materials at the fabrication facility,
3. Type, method and frequency of quality control testing at the fabrication facility,
4. List (by manufacturer and product name) of process colors, protective overlay film, retroreflective sheeting and black non-reflective film,
5. Recommended cleaning procedure for each product,
6. Method of packaging, transport and storage for signs.

No legend shall be installed at the project site. Legend shall include letters, numerals, tildes, bars, arrows, route shields, symbols, logos, borders, artwork, and miscellaneous characters. The style, font, size, and spacing of the legend shall conform to the Standard Alphabets published in the FHWA Standard Highway Signs Book. The legend shall be oriented in the same direction in accordance with the manufacturer's orientation marks found on the retroreflective sheeting.

On multiple panel signs, legend shall be placed across joints without affecting the size, shape, spacing, and appearance of the legend. Background and legend shall be wrapped around interior edges of formed panel signs as shown on plans to prevent delamination.

The following notation shall be placed on the lower right side of the back of each sign where the notation will not be blocked by the sign post or frame:

1. PROPERTY OF STATE OF CALIFORNIA.
2. Name of the sign manufacturer.
3. Month and year of fabrication.
4. Type of retroreflective sheeting
5. Manufacturer's identification and lot number of retroreflective sheeting.

The above notation shall be applied directly to the aluminum sign panels in 6-mm upper case letters and numerals by die-stamp and applied by similar method to the fiberglass reinforced plastic signs. Painting, screening, or engraving the notation will not be allowed. The notation shall be applied without damaging the finish of the sign.

Signs with a protective overlay film shall be marked with a dot of 10 mm diameter. The dot placed on white border shall be black while the dot placed on black border shall be white. The dot shall be placed on the lower border of the sign before application of the protective overlay film and shall not be placed over the legend and bolt holes. The application method and exact location of the dot shall be determined by the manufacturer of the signs.

For sign panels that have a minor dimension of 1220 mm or less, no splice will be allowed in the retroreflective sheet except for the splice produced during the manufacturing of the retroreflective sheeting. For sign panels that have a minor dimension greater than 1220 mm, only one horizontal splice will be allowed in the retroreflective sheeting.

Unless specified by the manufacturer of the retroreflective sheeting, splices in retroreflective sheeting shall overlap by a minimum of 25 mm. Splices shall not be placed within 50 mm from edges of the panels. Except at the horizontal borders, the splices shall overlap in the direction from top to bottom of the sign to prevent moisture penetration. The retroreflective sheeting at the overlap shall not exhibit a color difference under the incident and reflected light.

Signs exhibiting a significant color difference between daytime and nighttime shall be replaced immediately at the Contractor's expenses.

Repairing sign panels will not be allowed except when approved by the Engineer.

The Department will inspect signs at the Contractor's facility and delivery location, and in accordance with Section 6, "Control of Materials," of the Standard Specifications. The Engineer will inspect signs for damage and defects before and after installation.

Regardless of kind, size, type, or whether delivered by the Contractor or by a common carrier, signs shall be protected by thorough wrapping, tarping, or other methods to ensure that signs are not damaged by weather conditions and during transit. Signs shall be dry during transit and shipped on palettes, in crates, or tier racks. Padding and protective materials shall be placed between signs as appropriate. Finished sign panels shall be transported and stored by method that protects the face of signs from damage. The Contractor shall replace wet, damaged, and defective signs at the Contractor's expense.

Signs shall be stored in dry environment at all times. Signs shall not rest directly on the ground or become wet during storage. Signs, whether stored indoor or outdoor, shall be in free standing. When stored outdoor, signs shall be placed at a minimum spacing of 100 mm apart. In areas of high

heat and humidity signs shall be stored in enclosed climate-controlled trailers or containers. Signs shall be stored indoor if duration of the storage will exceed 30 days.

Screen processed signs shall be protected, transported and stored as recommended by the manufacturer of the retroreflective sheeting.

When requested, the Contractor shall provide the Engineer test samples of signs and materials used at various stages of production. Sign samples shall be 300 mm x 300 mm in size with applied background, letter or numeral, and border strip.

The Contractor shall assume the costs and responsibilities resulting from the use of patented materials, equipment, devices, and processes for the Contractor's work.

SHEET ALUMINUM

Alloy and temper designations for sheet aluminum shall be in accordance with ASTM Designation: B209.

The Contractor shall furnish the Engineer a Certificate of Compliance in accordance to Section 6-1.07, "Certificates of Compliance," of the Standard Specifications for the sheet aluminum.

Sheet aluminum shall be pretreated in accordance to ASTM Designation: B449. Surface of the sheet aluminum shall be cleaned, deoxidized, and coated with a light and tightly adherent chromate conversion coating free of powdery residue. The conversion coating shall be Class 2 with a mass between 108 mg/m^2 and 377 mg/m^2, and an average mass of 269 mg/m^2. Following the cleaning and coating process, the sheet aluminum shall be protected from exposure to grease, oils, dust, and contaminants.

Sheet aluminum shall be free of buckles, warps, dents, cockles, burrs, and defects resulting from fabrication.

Base plate for standard route marker shall be die cut.

RETROREFLECTIVE SHEETING

The contractor shall furnish retroreflective sheeting for sign background and legend in accordance with ASTM Designation: D4956 and "Prequalified and Tested Signing and Delineation Materials" of these special provisions.

Retroreflective sheeting shall be applied to sign panels as recommended by the retroreflective sheeting manufacturer without stretching, tearing, and damage.

Class 1, 3, or 4 adhesive backing shall be used for Type II, III, IV, VII, VIII, and IX retroreflective sheeting. Class 2 adhesive backing may also be used for Type II retroreflective sheeting. The adhesive backing shall be pressure sensitive and fungus resistant.

When the color of the retroreflective sheeting determined from instrumental testing is in dispute, the Engineer's visual test will govern.

PROCESS COLOR AND FILM

The Contractor shall furnish and apply screened process color, non-reflective opaque black film, and protective overlay film of the type, kind, and product that are approved by the manufacturer of the retroreflective sheeting.

The Contractor shall furnish the Engineer a Certificate of Compliance in accordance to Section 6-1.07, "Certificates of Compliance," of the Standard Specifications for the screened process color, non-reflective opaque black film, and protective overlay film.

The surface of the screened process color shall be flat and smooth. When the screened process colors determined from the instrumental testing in accordance to ASTM Designation: D4956 are in dispute, the Engineer's visual test will govern.

The Contractor shall provide patterns, layouts, and set-ups necessary for the screened process.

The Contractor may use green, red, blue, and brown reverse-screened process colors for background and non-reflective opaque black film or black screened process color for legend. The coefficient of retroreflection for reverse-screened process colors on white retroreflective sheeting shall not be less than 70 percent of the coefficient of retroreflection specified in ASTM Designation: D4956.

The screened process colors and non-reflective opaque black film shall have the same outdoor weatherability as that of the retroreflective sheeting.

After curing, screened process colors shall withstand removal when tested by applying 3M Company Scotch Brand Cellophane Tape No. 600 or equivalent tape over the color and removing with one quick motion at 90°angle.

10-1.29 ALTERNATIVE PIPE

Alternative pipe culverts shall conform to the provisions in Section 62, "Alternative Culverts," of the Standard Specifications and these special provisions.

10-1.30 PLASTIC PIPE

Plastic pipe shall conform to the provisions in Section 64, "Plastic Pipe," of the Standard Specifications and these special provisions.

10-1.31 REINFORCED CONCRETE PIPE

Reinforced concrete pipe shall conform to the provisions in Section 65, "Reinforced Concrete Pipe," of the Standard Specifications and these special provisions.

Where embankment will not be placed over the top of the pipe, a relative compaction of not less than 85 percent shall be required below the pipe spring line for pipe installed using Method 1 backfill in trench, as shown on Standard Plan A62D. Where the pipe is to be placed under the traveled way, a relative compaction of not less than 90 percent shall be required unless the minimum distance between the top of the pipe and the pavement surface is the greater of 1.2 m or one half of the outside diameter of the pipe.

Except as otherwise designated by classification on the plans or in the specifications, joints for culvert and drainage pipes shall conform to the plans or specifications for standard joints.

When reinforced concrete pipe is installed in conformance with the details shown on Standard Plan A62DA, the fifth paragraph of Section 19-3.04, "Water Control and Foundation Treatment," of the Standard Specifications shall not apply.

When solid rock or other unyielding material is encountered at the planned elevation of the bottom of the bedding, the material below the bottom of the bedding shall be removed to a depth of 1/50 of the height of the embankment over the top of the culvert, but not less than 150 mm nor more than 300 mm. The resulting trench below the bottom of the bedding shall be backfilled with structure backfill material in conformance with the provisions in Section 19-3.06, "Structure Backfill," of the Standard Specifications.

The excavation and backfill below the planned elevation of the bottom of the bedding will be paid for as extra work as provided in Section 4-1.03D, "Extra Work," of the Standard Specifications.

The Outer Bedding shown on Standard Plan A62DA shall not be compacted prior to placement of the pipe.

10-1.32 CORRUGATED METAL PIPE

Corrugated steel pipe culverts shall conform to the provisions in Section 66, "Corrugated Metal Pipe," of the Standard Specifications and these special provisions.

Attention is directed to "Earthwork" and "Controlled Low Strength Material" of these special provisions regarding structure backfill for pipe culverts.

Asphaltic mastic coating or polymeric sheet coating substituted for bituminous coating shall be placed on the outside and inside surfaces of the pipe.

Timber bulkheads shall be constructed and placed across the ends of unconnected alternative pipe culverts as shown on the plans. Wood for timber bulkheads shall be construction heart grade redwood at least 25 mm thick. Full compensation for constructing and placing timber bulkheads shall be considered as included in the contract price paid per meter for the size of alternative pipe culverts involved and no separate payment will be made therefor.

Pipe reducers will be measured and paid for by the meter as the corrugated metal pipe of the larger diameter connected to the reducer.

10-1.33 WELDED STEEL PIPE

Welded steel pipe shall conform to the provisions in Section 70, "Miscellaneous Facilities," of the Standard Specifications and these special provisions.

Wrapping will not be required.

10-1.34 BRIDGE DECK DRAINAGE SYSTEM

Bridge deck drainage systems shall conform to the provisions for miscellaneous bridge metal in Section 75, "Miscellaneous Metal," of the Standard Specifications and these special provisions.

Self-tapping screws used for sleeve connections shall be hex-head stainless steel, installed in holes drilled to fit the self-tapping screws, conforming to the requirements of ASTM Designation: A 276, Type 316.

At the Contractor's option, fiberglass pipes and fittings with the same diameter and minimum bend radius as those shown on the plans, may be substituted for welded steel pipe in deck drain systems.

Fiberglass pipe and fittings shall conform to the requirements in ASTM Designation: D 2996, and shall have a minimum short-term rupture strength of 207 MPa. The adhesive type recommended by the manufacturer shall be used for joining pipe and fittings. Fiberglass pipe not enclosed in a box girder cell or encased in concrete shall be manufactured from ultraviolet-resistant resin pigmented with concrete-gray color, or be coated with a concrete-gray resin-rich exterior coating. Paint shall not be used. Fiberglass pipe treated with ultraviolet protection shall withstand a minimum of 2500 hours of accelerated weathering when tested in conformance with the requirements in ASTM Designation: G 154. Lamps shall be UV-B (313 nm wavelength). The resting cycle shall be 4 hours of ultraviolet exposure at 60°C, and then 4 hours of condensate exposure at 50°C. After testing, the surface of the pipe shall exhibit no fiber exposure, crazing, or checking, and only a slight chalking or color change.

Support spacing for fiberglass pipe shall be the same as shown on the plans for welded steel pipe. Pipe supports shall have a width of not less than 38 mm.

A Certificate of Compliance for fiberglass pipe and fittings shall be furnished to the Engineer in conformance with the provisions in Section 6-1.07, "Certificates of Compliance," of the Standard Specifications. The Certificate of Compliance shall include all laboratory test results conforming to the provisions specified herein.

For drainage piping NPS 8 or smaller, which is: (1) enclosed in a box girder cell and exposed for a length not greater than 6 m within the cell, or (2) encased in concrete, the Contractor shall have the option of substituting polyvinyl chloride (PVC) plastic pipe and fittings, with the same diameter and minimum bend radius as shown on the plans, for welded steel pipe.

The PVC plastic pipe and fittings shall be Schedule 40 conforming to the requirements of ASTM Designations: D 1785. The maximum support spacing for PVC plastic pipe shall be 2 m.

Couplings used to connect PVC plastic pipe or fiberglass pipe to steel shall be threaded or flanged. The sleeve connections shown on the plans shall not be used for either PVC plastic pipe or fiberglass pipe.

If PVC plastic pipe or fiberglass pipe is substituted for welded steel pipe, the quantity of drainage piping will be computed on the basis of the dimensions and details shown on the plans, and no change in the quantities to be paid for will be made because of the use of PVC plastic pipe or fiberglass pipe.

Bridge deck drainage systems will be measured and paid for by the kilogram in the same manner specified for miscellaneous metal (bridge) in Section 75-1.06, "Measurement," and Section 75-1.07, "Payment," of the Standard Specifications.

10-1.35 COMPRESSED AIR PIPE

Steel pipe for compressed air shall conform to the requirements in ASTM Designation: A 53 (Grade B), standard weight, galvanized, except that the zinc coating shall be not less than 90 percent of the amount specified in that ASTM Designation. Fittings, shall be galvanized malleable iron, banded and threaded, conforming to the requirements in ANSI standard: B16.3, Class 150. The pipe ends shall be grooved to accept mechanical couplings.

Mechanical Coupling

Mechanical couplings shall be galvanized iron body, 2-piece type with zinc electroplated bolts. The coupling shall allow 6.4 mm end separation and a minimum of 1 degree of angular deflection. The couplings shall have a minimum pressure rating of 5500 kPa. Rigid couplings and flange adaptors shall match the mechanical couplings except that the pressure rating for the flange adaptors and rigid couplings shall be a minimum of 2000 kPa.

10-1.36 WATER MAINS

PART 1-GENERAL

SUMMARY

Scope.-This work shall consist of furnishing and installing water main for US Navy (200 mm) complete with pipes, fittings, valves, accessories and incidentals necessary to complete the work for a ready to operate domestic water distribution system.

The work includes excavating, trenching, backfilling, pavement restoration and testing with the exception of disinfection for water main for US Navy, in accordance with the details shown on the plans, as specified in the Standard Specifications, and these special provisions.

For US Navy, the San Francisco Public Utilities Commission/Water Department (SFWD) is the jurisdictional water utility district.

Attention is directed to "Obstructions," of these special provisions, regarding schedule and coordination for the installation of SFWD water mains.

SFWD Work

SFWD will make all connections and disconnections to and from the existing US Navy water main, connections of existing service pipes to new mains (retap), connections of Contractor installed new service pipes to existing meters and all other work that involves cutting or otherwise disturbing the existing water system.

SFWD will also provide disinfection of the US Navy water main by chlorination as specified in these special provisions.

For all work to be done by SFWD, the Contractor shall perform all excavation and backfill, steel plating/removal and pavement restoration.

REFERENCE STANDARDS

The regulatory requirements which govern the work of this Section include the following governing Codes and Standards, besides the State water work standards:

A. American Society for Testing and Materials (ASTM):

1. ASTM Designation B88 Seamless Copper Water Tube
2. ASTM Designation D1557 Test Methods for Moisture-Density Relations of Soils and Soil-Aggregate Mixtures Using 10-lb (4.54-kg) Rammer and 18-in. (457-mm) Drop

B. American Water Works Association (AWWA):

1. AWWA C104 Cement Mortar Lining for Ductile-Iron Pipe and Fittings for Water
2. AWWA C105 Polyethylene Encasement for Ductile-Iron Pipe Systems
3. AWWA C110 Ductile-Iron and Gray-Iron Fittings, 3 In. through 48 In. (75 mm through 1200 mm), for Water and Other Liquids
4. AWWA C151 Ductile-Iron Pipe, Centrifugally Cast, for Water or Other Liquids
5. AWWA C153 Errata Nov 1996) Ductile-Iron Compact Fittings, 3 In. through 24 In. (76 mm through 610 mm) and 54 In. through 64 In. (1,400 mm through 1,600 mm) for Water Service
6. AWWA C111 Rubber-Gasket Joints for Ductile-Iron Pressure Pipe and Fittings
7. AWWA C504 Rubber-Seated Butterfly Valves
8. AWWA C509 Resilient-Seated Gate Valves for Water Supply Service
9. AWWA C600 Installation of Ductile-Iron Water Mains and Their Appurtenances
10. AWWA C800 Underground Service Line Valves and Fittings

C. American Society of Mechanical Engineers (ASME): ASME B16.26 Cast Copper Alloy Fittings for Flared Copper Tubes.

SUBMITTALS

General Submittals:

General.-.Submit listed submittals in accordance with the provisions of the Contract Documents.

Product Data.-.Submit respective manufacturer's product data including catalog cuts, descriptive drawings, and literature, with all exceptions to the Specifications noted for each equipment item to be furnished under this Section including, but not limited to, ductile iron pipe, copper tubing, fittings, gaskets, valves, polyethylene encasement material and appurtenances.

Shoring Plans.-Submit Shoring Plans and calculations for excavation depths greater than 1.5 meters. Shoring plans shall be signed and stamped by a licensed Civil or Structural Engineer if plans deviate from Caltrans Standards. Work in the field can start only after the submittals have been approved.

Construction Schedule:

Attention is directed to "Obstructions" of these special provisions, regarding duration and work to be performed by SFWD personnel, regarding to the water mains relocation.

The Contractor shall submit Construction Schedule that will include time for the SFWD personnel to complete their work as specified herein. The Contractor shall incorporate the SFWD required times in his/her schedule. The Contractor shall confer with the Engineer in the preparation of the schedule that needs to satisfy the water distribution operation and minimize disruption of the services. No construction for water work shall be started until the Engineer approves the schedule.

The Contractor shall complete the excavation of the trench and install appropriate shoring to the satisfaction of the Engineer before SFWD personnel can do any work.

Quality Assurance Submittals:

Test Reports.-Certified test reports showing compliance with specified performance characteristics and physical properties.

Manufacturer's Instructions.-.Manufacturer's installation instructions.

Closeout Submittals:

Record Drawings.-Record actual location of distribution mains, valves, connections, and invert elevations for review.

DELIVERY, STORAGE & HANDLING

Ordering.-Comply with manufacturer's ordering instructions and lead time requirements to avoid construction delays.

Storage and Protection.-.Store materials protected from exposure to harmful weather conditions and at temperature and humidity conditions recommended by manufacturer.

SITE CONDITIONS

Excavations in which products will be buried shall be dry.

Coordinate the installation of the water supply system with the SFPUC/SFWD.

PART 2. – PRODUCTS

MATERIALS

Pipe.--Pipe sizes of 100 mm and larger in diameter, shall be ductile iron, Class 53 with Tyton bell and spigot ends conforming to ANSI/AWWA C151/A21.51, latest editions. Pipe sizes of less than 100 mm in diameter shall be copper tubing, conforming to ASTM Designation B 88, Type K, annealed. Pipe sizes of less than 100 mm in diameter shall be copper tubing, conforming to ASTM Designation B 88, Type K, annealed.

Fittings

Fittings for pipe 100 mm and larger.-Ductile Iron Push-On Tyton compact fittings shall conform to the applicable requirements of ANSI/AWWA C110/A21.10, or ANSI/AWWA C153/A21.53, latest revisions, unless otherwise specified herein. Fitting for pipe less than 100 mm in diameter shall be bronze/copper conforming to ASME B16.26. Fittings shall accommodate a "Field-Lok" type gasket.

Lining and Coating.-Ductile iron pipe, and fittings shall be lined with double cement-mortar lining with an asphaltic seal coating, 0.03 mm (1 mil), in accordance with AWWA C104. The exterior of ductile iron pipe, specials, and fittings shall be coated with a 0.03-mm (1-mil) asphaltic coating in accordance with AWWA C151, section 51-9.

Pipe Joints

Joint for ductile iron pipe 100 mm and larger, "Field-Lok" type of gaskets shall be used. Joints for less than 100 mm in diameter copper tubing shall be sweated, flared, flanged or screw-in as required per SFWD.

Valves

Valves 100 mm and larger in size shall be push-on (Tyton by Tyton ends) and can accommodate "Field-Lok" gaskets, resilient seated, non-rising stem, right turn open and nut operated.

Service Valves and fittings less than 100 mm in size shall be bronze/brass and shall comply with AWWA C800. Connections shall be screw-in, flared, or flanged as required.

Corporation Stops.-Corporation Stops shall be brass, in compliance with AWWA C800, copper tubing flare connection.

Polyethylene Encasement.-Polyethylene encasement for pipe and fittings shall conform to AWWA C105. 8 mil low density polyethylene tubes shall be used.

MISCELLANEOUS METAL

All connecting devices, including Tie Rods, Rod Couplings, Pipe Clamps, Restraints and related hardware shall be as shown on plans.

Saddle shall feature brass body with stainless steel straps and hardware.

TRENCH BEDDING AND BACKFILL

Sand Bed.-All pipe shall be constructed on a prepared or natural sand bed the width of which shall be at least 300 mm plus the full width of the pipe, and not less than 100 mm thick below the pipe after installation.

Sand Backfill.-Backfill around all pipes from the bottom of the trench to a height 150 mm above the top of pipes for the full width of the trench shall be sand only. Sand backfill material shall be in accordance with the applicable requirements of the Standard Specifications.

Backfill Above Required Sand.-Backfill material above the required sand shall be in accordance with the applicable Standard Specifications.

PART 3. - EXECUTION

MAINTAINING WATER SERVICES

Maintain water service and conduct operations at times selected to minimize the duration and inconvenience of service interruption.

Keep existing water mains that will be replaced by new water mains in service until new water mains are ready for service.

Water valves in service shall be operated only by SFWD personnel.

CUTTING OF PIPE

Cutting of pipe shall be done in a neat and workmanlike manner without damage to the pipe. Unless otherwise recommended by the manufacturer and authorized by the Engineer, cutting shall be done with an approved type mechanical cutter. Wheel cutter shall be used when practicable.

PIPE INSTALLATION

A. No pipe shall be installed before the street or roadway sub-base is built.

B. Before any trench is excavated, the Contractor shall make openings in the roadway or sidewalk as directed by the Engineer to verify a suitable alignment of the main.
The trench shall be excavated so that a 100 mm thick layer of sand bedding can be installed beneath the pipe bottom such that the barrel of the pipe will have an even bearing along its entire length and with sufficient clearance provided for any necessary operations in connection with the laying of the pipe. Bell holes shall be excavated for each pipe bell or joint.

C. Before any pipe may be installed, the grade of the trench bottom shall be to the satisfaction of the Engineer. Immediately prior to installing the pipe, the Contractor shall remove all loose rocks and other objectionable material from the bottom of the trench and bell holes. When the trench is properly prepared, the pipe shall be lowered therein, singly, without jar or strain, and assembled by piece inside the trench.

D. Joints for ductile iron pipe shall be fastened by use of "Field-Lok" gaskets, in accordance with AWWA C600, unless otherwise directed by the Engineer.

E. The pipe shall be joined in strict adherence to the pipe manufacturer's printed installation instructions.

F. When the ductile iron pipe is cut in the field, the outside of the cut end shall be beveled about 6 mm at an angle of about 30 degrees and the leading edge rounded. The prepared cut end shall be marked at 84 mm for a 300 mm main and 83 mm for a 100 mm water line.

G. If the joint assembly is not accomplished with the application of reasonable force, the plain end of the pipe shall be removed to check the proper position of the gasket. At the end of each day, the Contractor shall plug the end of the laid pipe.

H. All connections to existing water mains will be made by SFWD. Contractor shall coordinate with SFWD to facilitate connection of the new and existing system.

I. Contractor shall provide locating/marking tape in the trench continuously over the centerline of the pipe per applicable requirements of these Specifications

J The entire piping system (main and service) shall be encased with polyethylene tubes or sheets in accordance with AWWA C105. Tapes shall be used to seal the wrapping at joints and tees.

K. The Contractor shall paint all tie rods, lugs, restraining rings assembly and all miscellaneous metal attached to the pipeline installed by the Contractor and SFWD with two coats of Koppers Bitumastic No. 505 or two coats of Proteco Wrap CA160 or approved equal, applied in accordance with the manufacturer's directions.

L. Insulating flanges and/or couplings shall be installed to electrically isolate the newly installed portion of pipeline from existing metallic pipelines.

M. Water lines shall not be laid in the same trench with sewer lines, gas lines, fuel lines, or electric wiring. Water lines shall be 3.3 m horizontally and 0.3 m vertically from sewer lines. Water lines shall in all cases cross above sewage force mains or inverted siphons and shall be not less than 0.3 m above the sewer main. Submit proposals for the Engineer's approval if these requirements can not be met due to field conditions.

N. The maximum allowable joint deflection shall be as given by the pipe manufacturer. If the alignment requires deflection in excess of the above limitations, a sufficient number of shorter lengths of pipe shall be installed to provide angular deflections within the limit set forth.

O. Restrained Joints.-Plugs, caps, tees and bends deflecting 11.25 degrees or more, either vertically or horizontally, on waterlines larger than 300 mm in diameter shall be provided with restrained joints. Valves shall be securely anchored or shall be provided with restrained joints to prevent movement. All joints on lateral and dead end of 100 mm in diameter or larger pipes shall be restrained.

P. The Contractor shall complete the excavation of the pit and install appropriate shoring to the satisfaction of the Engineer before SFWD personnel can do any work.

IDENTIFICATION OF PUSH-ON GASKET JOINTS

The Contractor shall identify all joints with Push-On gaskets by spraying white marking paint on top of each bell and also by taping a direct burial tape around the spigot end of each pipe just in front of the bell.

INSTALLING PIPE FITTINGS

The Contractor shall include the procurement, placing, restraining, and protecting of all fittings, valves, joint restraints, and all other appurtenances to be incorporated in the work, as indicated in the Contract Documents or as directed by the Engineer.

Installation.-Bends, tees, and gates of 100 mm and larger in diameter shall be fastened to the pipe or to each other by use of "Field-Lok" type gaskets. Caps shall be fastened to the pipe by use of tie rods and lugs or restrainers as shown on plans or directed by the Engineer. Additional lug and tie rod joint restraints shall be installed at locations directed by the Engineer.

Valve Boxes.-Over each valve, a piece of ductile iron pipe of such size as may be required by SFWD shall be placed vertically to form a valve box. A suitable cover shall be placed on top of the pipe or box. The bottom of the box shall rest on a steel plate so placed as to prevent the box from bearing on the gate. Contractor shall cut the box to such lengths that the top of the gate cover will be flush with the surface of the finished pavements shown on plans. The word "WATER" shall be cast in the cover. The box length shall adapt, without full extension, to the depth of cover required over the pipe at the valve location.

INSTALLING SHORING

The Contractor shall install an approved shoring system for all excavations 1.5 meters or more in depth, in conformance with "Excavation Safety Plans," of these special provisions.

In locations where the SFWD crews will install service lines or connections to other lines, regardless of depth, the Contractor shall install a solid sheeting type shoring system, approved by the Engineer, that is capable of protecting all excavations from excessive water that may be present and give ample access to the crews to perform the installation. This shoring system is more stringent than Cal/OSHA standards.

Shoring materials and equipment shall be removed from the excavation prior to completion of work.

INSTALLATION OF SCREW TAPS

The Contractor shall drill, tap, and install all screw taps and risers as indicated or as required by the Engineer.

Screw taps not satisfactorily installed in the opinion of the Engineer shall be removed and replaced at the expense of the Contractor. Where the screw tap installation is unsatisfactory, it shall be removed and replaced with a solid cast iron plug. The Contractor shall relocate screw taps at locations as directed by the Engineer.

FIELD QUALITY REQUIREMENTS

The Contractor shall obtain a relative compaction of not less than 95 percent throughout each layer of all backfill constructed within 1 meter of pavement subgrade, or adjacent ground. Below the top 1 meter of backfill, the relative compaction shall not be less than 90 percent. If tests indicate work does not meet specified requirements, remove such work, replace, and retest at no additional cost to the State.

The Contractor shall furnish all equipment, accessories and incidentals for the hydrostatic tests including temporary anchoring devices.

TESTS

A. Protection from Flooding: Provide positive measures to protect exposed, installed pipe and compacted pipe bedding from flooding during testing.
B. Notice of Hydrostatic Pressure Test:

1. Give 72 hours notice of intention of hydrostatic pressure test for water main to SFWD.
2. Designate largest sections feasible for hydrostatic pressure test. Pressure test shall be performed by the Contractor; at Contractor's expense. The SFWD will perform chlorination for water main only.

C. Testing Requirements:

Perform hydrostatic tests in accordance with the requirements of the SFWD. All such tests shall be witnessed by the representative of the SFWD. The Contractor shall provide all labor and materials required for the tests and shall be responsible for making all such arrangements.
Prior to backfilling, isolate the system by use of approved valves, caps and plugs, or other acceptable methods.
Maintain such isolation throughout the performance of pressure testing.
Where valves are used for isolation, eliminate leakage through such valves if it occurs.
Maintain new work isolated from existing water mains, except for test connections, until testing and chlorination have been completed.
Provide temporary anchorage as required for the test.
Install the water source connection for testing the isolated section. The Engineer may permit the use of a tap which will be furnished and installed by SFWD for water main.
Where leakage occurs, perform necessary corrective measures.
Remove and replace defective pipes, joints, fittings, valves, and other appurtenances. Reset such items if displaced.

The Contractor shall test the line to a hydrostatic pressure of 1.55 MPa. The actual pressure test of 1.55 MPa shall be maintained for not less than two (2) hours.

If any section of the pipe under test develops a leak evidenced by a test pressure drop, the Contractor shall repair or replace the defective portion of the pipe as directed by the Engineer at no additional cost. After all repairs are made, the pipe shall be retested.

DISINFECTION

Upon completion of satisfactory hydrostatic test, SFWD will disinfect the US Navy- owned water mains. For disinfection scheduling purposes, refer to "Obstructions" of these special provisions. The SFWD will supply and install all piping, fittings, and other materials necessary to chlorinate the main, except screw taps and risers, which shall be installed by the Contractor. The Contractor shall not backfill the site of such work until the satisfactory disinfection of the main is verified by the Engineer. The Contractor shall disinfect the 100 mm Caltrans-owned maintenance water line.

REMOVAL OF SFWD -OWNED BOX AND COVER

The Contractor shall remove all existing valve boxes and valve covers, if any, that are to be abandoned in this contract or as directed by the Engineer. The Contractor shall saw cut, excavate, remove and dispose of pavement; excavate the hole to the dimensions indicated (or required); remove the box at least 45 cm below grade (removal of the plate below the box is optional) and dispose of as his/her property; place and maintain all traffic routing and public safety requirements; furnish and place sand backfill; restore pavement, sidewalk, and other roadway structures that have been removed during the progress of the work, unless otherwise specified herein, and clean the site of the work together with all other work necessary or incidental thereto.

The Contractor shall return all box covers to the SFWD Corporation Yard at 1990 Newcomb Avenue, San Francisco, or at the location indicated by the Engineer.

The Contractor shall notify the City and County of San Francisco, SFWD in writing 5 working days prior to scheduling the removal of abandoned valve boxes and valve covers for SFWD Inspector approval. The Contractor shall identify the abandoned valve boxes and covers that are to be removed by marking them in the field for the SFWD Inspector for approval. Removal work shall be completed before surrounding finish grade work.

Restoring Pavement

Vehicular travel over backfilled but unpaved and unabridged trenches and other excavations will not be permitted. The Contractor shall construct, before use of pavement by vehicular traffic, and thereafter satisfactorily maintain, a smooth, regular asphalt pavement, not less than 150 mm thick, Type A asphalt concrete, and a 345 mm thick aggregate base, Class 3, over backfilled areas for the safe passage of vehicular traffic. All excess materials shall, at the same time, be removed and the street cleaned. The asphalt surfacing shall be in accordance with the applicable requirements of the Standard Specifications.

Cleanup

Upon completion of the installation of water lines, and appurtenances, all debris and surplus materials resulting from the work shall be removed.

MEASUREMENT AND PAYMENT

200 mm water main, will be measured along the centerline of the line, including fittings and valves, and paid for per meter for various sizes in the same manner specified for welded steel pipe in Section 70-1.04, "Measurement," and Section 70-1.05, "Payment," of the Standard Specifications.

The contract price paid per meter for 200 mm water main involved shall include full compensation for furnishing all labor, materials, tools, equipment and incidentals, and for doing all the work involved in installing the different sizes and types of pipe, fittings and valves, complete in place, including excavation backfill, installing valve boxes, polyethylene encasement, shoring for all excavation by the Contractor or SFWD for connecting and disconnecting of water main, disinfection of maintenance water line and testing in as shown on the plans, and as specified in these special provisions, and as directed by the Engineer. Any related work shall be considered as incidental and no separate payment shall be made therefore.

10-1.37 THERMOPLASTIC DELINEATION (ESA)

A 200-mm thermoplastic delineation (ESA) along boundaries of the paved areas of the ESA 1a and 1b shall be furnished, installed, maintained in conformance with the details shown on the plans, as specified in these special provisions and as directed by the Engineer.

Thermoplastic delineation (ESA) shall be applied in conformance with the provisions in Section 84, "Traffic Stripes and Pavement Markings," of the Standard Specifications and these special provisions.

Thermoplastic material shall be free of lead and chromium, and shall conform to the requirements in State Specification PTH-02ALKYD.

Retroreflectivity of the thermoplastic delineation (ESA) shall conform to the requirements in ASTM Designation: D 6359-99. White thermoplastic traffic stripes and pavement markings shall have a minimum initial retroreflectivity of 250 $mcd \cdot m^{-2} \cdot lx^{-1}$.

Thermoplastic delineation (ESA) shall be applied at the minimum thickness and application rate as specified below. The minimum application rate is based on a solid stripe of 100 mm in width.

Minimum StripeThickness (mm)	Minimum Application Rate (kg/m)
2.0	0.4

MEEASUREMENT AND PAYMENT

Thermoplastic delineation (ESA) will be measured and paid for as thermoplastic traffic stripe.

Full compensation for maintaining the 200-mm ESA thermoplastic delineation (ESA) around the paved areas shall be considered as included in the contract shall be considered as included in the contract lump sum price paid for this contract change order 64 work involved, including all supplements, and no separate payment will be made therefor.

SECTION 10-3. ELECTRICAL SYSTEMS

10-3.01 DESCRIPTION

The following work shall conform to the provisions in Section 86, "Signals, Lighting and Electrical Systems," of the Standard Specifications and these special provisions:

A. Underground raceways electrical system (see E-1 to E-16 and UD-1 to UD-6) shall include, but not be limited to the following:

1. Install manholes and duct banks as shown on the plans.
2. Install all conduit including anchors, inserts, fittings, and supports as shown on the plans.
3. Install and terminate bare copper grounding conductors and copper ground bars as shown on the plans.

10-3.02 ABBREVIATIONS

The following abbreviations are added to those listed in Section 1-1.02, "Abbreviations," of the Standard Specifications:

BNC	Bayonet Nut Connector
CPU	Central Processing Unit
CSA	Canadian Standards Association
C-UL	Canadian Underwriters Laboratories
DLCI	Data Link Control Identifier
DMA	Direct Memory Access
EEMAC	Electrical Equipment Manufactures Advisory Council
EEPROM	Electrically Erasable Programmable Read-Only Memory
EMI/RFI	Electromagnetic Interference/Radio Frequency Interference
EPR	Ethylene propelyne rubber
ESO	Electrical Safety Orders of the Division of Industrial Relations, State of California
FCC	Federal Communications Commission
GFCI	Ground Fault Current Interrupter
THD	Total Harmonic Distortion
IDC	Insulation Displacement Connector
ICEA	Insulated Cable Engineering Association
IEC	International Electrotechnical Commission
I/O	Input / Output
ISDN	Integrated Services Digital Network
ISO	International Organization for Standardization
IS/OS	Individual Shield/Overall Shield
JEDEC	Joint Electron Device Engineering Council
NEC	National Electrical Code
NETA	International Electrical Testing Association Inc.
NO	Normally Open
NC	Normally Closed
NFPA	National Fire Protection Association
NTSC	National Television Systems Committee
OSHA	Occupational Safety and Health Administration
OSI	Open Systems Interconnect
PVC	Polyvinyl Chloride
REA	Rural Electrification Administration
RTD	Resistance Temperature Detector
SAS	Self-Anchored Suspension
SCADA	Supervisory Control And Data Acquisition
SCSI	Small Computer Systems Interface
SDLC	Serial Data Link Control
TELCO	Telephone company
TIA	Telecommunications Industry Association
VME	Versa Module Eurocard
XLPE	Cross Linked Polyethelene
YBI	Yerba Buena Island

10-3.03 COST BREAK-DOWN

Cost break-downs shall conform to the provisions in Section 86-1.03, "Cost Break-Down," of the Standard Specifications and these special provisions.

The Engineer shall be furnished a cost break-down for each contract lump sum item of work described in this Section 10-3.

The cost break-down shall be submitted to the Engineer for approval within 30 days after the contract has been approved. The cost break-down shall be approved, in writing, by the Engineer before any partial payment for the items of electrical work will be made.

The cost break-down shall be divided into the following categories. Within each category, each item of work shall be broken down, as a minimum, to include the following listed items in addition to those listed in the Standard Specifications:

A. Underground raceways electrical installation is shown on the plans and shall include, but not be limited to the following additional items of the cost break-down:

1. Conduits, conduit anchors, fittings and supports – list each size and type.
2. Equipment grounding system – list each size and type.
3. Manholes – list each size and type.
4. Duct bank – list each size and type.

10-3.04 NUMBERING ELECTRICAL EQUIPMENT

The placement of numbers on electrical equipment will be done by others, unless otherwise stated in these special provisions.

10-3.05 RIGID GALVANIZED STEEL CONDUIT, THREADED COUPLINGS AND ELBOWS

The rigid galvanized steel (RGS) conduit, threaded couplings, and elbows shall conform to Section 86-2.05, "Conduit," of the Standard Specifications for Type 1 where shown on the plans.

Pull ropes for use when installing cables in conduit shall consist of flat, woven, lubricated, soft-fiber polyester tape with a minimum tensile strength of 8000 N and shall have printed sequential measurement markings at least every meter.

10-3.06 UNDERGROUND RACEWAYS

DUCTBANKS

Underground conduits shall be Type 1 encased in concrete. Concrete for conduit encasement shall be 907 kg test with aggregate of 20 mm or smaller.

The concrete shall be colored red by the addition of 6 kg of red oxide powder to each cubic meter of mix. The coloring shall be thoroughly mixed into the concrete before pouring. Adequate spacers, tie-downs and bracing shall be provided to maintain conduits in place during the pouring of the concrete. Ducts shall be installed so as to drain to manholes.

All conduits entering and leaving the manholes shall be bonded together with copper bonding cable looped through the manhole. All conduit connections shall be threaded. All connections shall be made with suitable conductive thread compound. After installation all conduits shall be checked for continuity and cleaned properly. Cleaning of conduit shall be done by the use of compressed air

for sizes 41 mm and smaller, and by the use of mandrel and cleaning brushes pulled through each conduit for sizes larger than 41 mm. Prior to backfilling of the underground duct system, the Contractor shall provide a yellow (with black lettering) warning tape, 340 mm from the finished grade, stating "CAUTION-BURIED ELECTRICAL LINE".

MANHOLES

All manholes shall be installed by the Contractor as shown and specified on the plans.

MANHOLE FRAMES AND COVERS

Frame and cover shall be cast iron and shall be designated for H-20 Traffic loading, and shall comply with ASTM F1143.

Manhole cover shall be engraved with the following nameplates:

a. Caltrans High Voltage, for Manholes No. 17, 20, and 23
b. Caltrans 600 V, for Manholes No.16, 19, and 22
c. Caltrans TOS&COM, for Manholes No.18, 21, and 24

10-3.07 BONDING AND GROUNDING

Bonding and grounding shall conform to the provisions in Section 86-2.10, "Bonding and Grounding," of the Standard Specifications and these special provisions.

Bonding jumpers in standards with handholes and traffic pull box lid covers shall be attached by a UL listed lug using 4.5-mm diameter or larger brass or bronze bolts and shall run to the conduit or bonding wire in the adjacent pull box. The grounding jumper shall be visible after the standard has been installed and the mortar pad and cap have been placed on the foundation.

Standards without handholes shall have bonding accomplished by jumpers attached to UL listed ground clamps on each anchor bolt.

For slip base standards or slip base inserts, bonding shall be accomplished by jumpers attached to UL listed ground clamps on each anchor bolt, or a UL listed lug attached to the bottom slip base plate with a 4.5-mm diameter or larger brass or bronze bolt.

Equipment bonding and grounding conductors are required in conduits, except when the conduits contain combinations of loop lead-in cable, fiber optic cable, or signal interconnect cable. A No. 8 minimum, bare copper wire shall run continuously in circuits, except for series lighting circuits, where No. 6 bare copper wire shall run continuously. The bonding wire size shall be increased to match the circuit breaker size in conformance with the Code, or shall be as shown on the plans. Conduits to be installed for future conductors, may omit the copper wire.

Bonding of metallic conduits in metal pull boxes shall be by means of bonding bushings and bonding jumpers connected to the bonding wire running in the conduit system.

500 kCMIL bare copper grounding conductor and 4/0 grounding conductors shall be installed in the duct bank as shown on the plans. Route the 500 kCMIL grounding conductor through duct banks and manholes. Two 250 kCMIL bare grounding conductors are to be exothermically welded to the 500 kCMIL main grounding conductor and ran to the foundation footing of all bent and pier columns as shown on the plans. At each split in the duct bank a 4/0 bare copper grounding conductor shall be exothermically welded to the 500 kCMIL bare copper grounding conductor and ran with the separate 600 volt or TOS/COM duct bank and continued through any manholes and

back to the 15 kV duct bank. All bridge electrical components shall be grounded to this system as shown on the plans.

10-3.08 PAYMENT

The contract lump sum prices paid for underground raceways electrical shall be considered as included in the contract lump sum price paid for this contract change order 64 work involved, including all supplements, for furnishing all labor, materials, tools, equipment, and incidentals, and for doing all the work involved in the listed items below, complete in place, including manuals, preparation and delivery of any and all proposals, plans, submittals, or other documents to the Engineer, warranty work or modifications, software or software changes, testing and training, as shown on the plans, as specified in the Standard Specifications and these special provisions, as directed by the Engineer, and no additional compensation will be allowed therefor.

Full compensation for furnishing and installing frames and covers for duct bank manholes shall be considered as included in the contract lump sum price paid for this contract change order 64 work involved, including all supplements, and no separate payment will be made therefor.

Standard Plans List

The Standard Plan sheets applicable to this contract include, but are not limited to those indicated below. Applicable Revised Standard Plans (RSP) and New Standard Plans (NSP) indicated below are included in the project plans as individual Standard Plan sheets.

GENERAL ROAD WORK (Miscellaneous)

A10A	**Acronyms and Abbreviations (A-L)**
A10B	**Acronyms and Abbreviations (M-Z)**
A10C	**Symbols (Sheet 1 of 2)**
A10D	**Symbols (Sheet 2 of 2)**
A20A	**Pavement Markers and Traffic Lines, Typical Details**
A20B	**Pavement Markers and Traffic Lines, Typical Details**
A62B	**Limits of Payment for Excavation and Backfill – Bridge Surcharge and Wall**
A62C	**Limits of Payment for Excavation and Backfill - Bridge**

GENERAL ROAD WORK (Drainage)

D73	**Drainage Inlets**
D74C	**Drainage Inlets Details**

GENERAL ROAD WORK (Temporary Facilities)

T2	**Temporary Crash Cushion, Sand Filled (Shoulder Installations)**
T3	**Temporary Railing (Type K)**

BRIDGE

B0-1	**Bridge Details**
B7-6	**Deck Drains – Types D-1 and D-2**
B7-11	**Utility Details**

ES-1A	Electrical Systems (Symbols And Abbreviations)
ES-1B	Electrical Systems (Symbols And Abbreviations)
ES-1C	Electrical Systems (Symbols And Abbreviations)

STATE OF CALIFORNIA - DEPARTMENT OF TRANSPORTATION

CONTRACT CHANGE ORDER

Change Requested by: Engineer

CCO 65	Suppl. No. 0	Contract No. 04 - 0120R4	Road SF-80-12.6/13.2	FED. AID LOC.: ACBRIM-080-1(097)N

To: CC MYERS INC

You are directed to make the following changes from the plans and specifications or do the following described work not included in the plans and specifications for this contract. ***NOTE: This change order is not effective until approved by the Engineer.***

Description of work to be done, estimate of quantities and prices to be paid. (Segregate between additional work at contract price, agreed price and force account.) Unless otherwise stated, rates for rental of equipment cover only such time as equipment is actually used and no allowance will be made for idle time. This last percentage shown is the net accumulated increase or decrease from the original quantity in the Engineer's Estimate.

Extra Work at Force Account:

As authorized by the Engineer, provide advance planning for the bridge demolition work concerning Contract Bid Item No. 40 "Bridge Removal" necessary due to the presence of the Bent W3 through Bent W7 foundations and columns that have been added to the contract.

Estimated Cost of Extra Work at Force Account $175,000.00

Estimated Cost: Increase ☑ Decrease ☐ **$175,000.00**

By **reason of this order the time of completion will be adjusted as follows:** 0 days

Submitted by

Signature	Resident Engineer BILL CASEY	Date 3-5-08

Approval Recommended by

Signature	Area Construction Manager DENNIS TURCHON	Date 3/7/08

Engineer Approval by

Signature	Area Construction Manager DENNIS TURCHON	Date 4/14/08

We the undersigned contractor, have given careful consideration to the change proposed and agree, if this proposal is approved, that we will provide all equipment, furnish the materials, except as may otherwise be noted above, and perform all services necessary for the work above specified, and will accept as full payment therefor the prices shown above.

NOTE: If you, the contractor, do not sign acceptance of this order, your attention is directed to the requirements of the specifications as to proceeding with the ordered work and filing a written protest within the time therein specified.

Contractor Acceptance by

Signature	(Print name and title) DANIEL E. HIMICK, PRESIDENT	Date 4/06/08

STATE OF CALIFORNIA - DEPARTMENT OF TRANSPORTATION

RECEIVED

CONTRACT CHANGE ORDER MEMORANDUM

DATE: 3/3/2008

TO: MIKE FORNER / DENNIS TURCHON	FILE: E.A. 04 - 0120R4 007650 JUN 20 08
	CO-RTE-PM SF-80-12.6/13.2
FROM: BILL CASEY	FED. NO. ACBRIM-080-1(097)N
CCO#: 65 SUPPLEMENT#: 0 Category Code: CHPA	CONTINGENCY BALANCE (incl. this change) $73,973,284.82
COST: $175,000.00 INCREASE ☑ DECREASE ☐	HEADQUARTERS APPROVAL REQUIRED? ☐ YES ☑ NO
SUPPLEMENTAL FUNDS PROVIDED: $0.00	IS THIS REQUEST IN ACCORDANCE WITH ENVIRONMENTAL DOCUMENTS? ☑ YES ☐ NO
CCO DESCRIPTION: Demo Existing Bridge Adv. Planning	**PROJECT DESCRIPTION:** CONSTRUCT ROUTE 80 TEMP BYPASS STRUCTURE

Original Contract Time:	Time Adj. This Change:	Previously Approved CCO Time Adjustments:	Percentage Time Adjusted: (including this change)	Total # of Unreconciled Deferred Time CCO(s): (including this change)
475 Day(s)	0 Day(s)	1195 Day(s)	252 %	7

THIS CHANGE ORDER PROVIDES FOR:

Advance planning pertaining to the demolition of the existing mainline bridge.

This project, the Temporary Bypass Structure (TBS), provides for the construction of a detour that will allow for the tie in of the new east span of the San Francisco Oakland Bay Bridge to Yerba Buena Island. The TBS encompasses three main structures, the East Tie-In (ETI) to the existing bridge, the West Tie-In (WTI) to Yerba Buena Island and the Viaduct structure between the two tie ins.

After traffic is placed onto the TBS detour, the contract calls for the removal of the abandoned section of bridge. This section is approximately 330 meters long and consist of a both double deck steel truss and concrete viaduct. Based on a December 25, 2006 Department memo, which was approved by Tony Anziano (Toll Bridge Program Manager), Richard Land (Chief Engineer) and subsequently by the Toll Bridge Program Oversight Committee (TBPOC), the advance construction of 10 foundations and columns from the future Yerba Buena Island Transition Structure (YBITS) project have been added to this contract with 3 additional columns in the process of being added. Many of these columns are being constructed directly under the existing bridge that is called for to be removed.

The advance construction of the YBITS foundations and columns will require a revised removal method for the abandoned structure than what was anticipated at the time of bid as the obstructions will require the bridge removal be performed on a more piecemeal basis. This change order provides for the advance planning of this revised bridge removal method in order to mitigate extensive delays to the project completion.

Compensation for this work shall be paid as extra work at force account at an estimated cost of $175,000.00 which shall be financed from the contract's contingency funds. A cost analysis is on file.

No adjustment of contract time is warranted as the advance planning work will not affect the controlling operation.

This change was concurred by Alec Melkonians - Asst. Project Manager.

Maintenance concurrence is not required as the work will not affect any permanent roadway features.

ADA Notice: For individuals with sensory disabilities, this document is available in alternate formats. For information call: (916) 654-6410 or TDD (916) 654-3880 or write

CONCURRED BY:			
Construction Engineer:		Date	
Bridge Engineer:		Date	
Project Engineer:		Date	
Project Manager:	Alec Melkonians	Date	3/4/08
FHWA Rep.:		Date	
Environmental:		Date	
Other (specify):		Date	
Other (specify):		Date	
District Prior Approval By:		Date	
HQ (Issue .Approve) By:		Date	
Resident Engineer's Signature:		Date	
		3-5-08	

ESTIMATE OF COST

	THIS REQUEST	TOTAL TO DATE
ITEMS	$0.00	$0.00
FORCE ACCOUNT	$175,000.00	$175,000.00
AGREED PRICE	$0.00	$0.00
ADJUSTMENT	$0.00	$0.00
TOTAL	$175,000.00	$175,000.00

FEDERAL PARTICIPATION

☐ PARTICIPATING ☐ PARTICIPATING IN PART ☐ NONE
☐ NON-PARTICIPATING (MAINTENANCE) ☑ NON-PARTICIPATING

FEDERAL SEGREGATION (if more than one Funding Source or P.I.P. type)
☑ CCO FUNDED PER CONTRACT ☐ CCO FUNDED AS FOLLOWS

FEDERAL FUNDING SOURCE	PERCENT

ADA Notice: For individuals with sensory disabilities, this document is available in alternate formats. For information call: (916) 654-6410 or TDD (916) 654-3880 or write

DEPARTMENT OF TRANSPORTATION – District 4 Toll Bridge Program
325 Burma Rd.
Oakland, CA 94607
Telephone (510) 622-4200 Fax (510) 622-4266

Attn: Bob Coupe

Job Name: South – South Detour
Transmittal No.: 05.03.02-001543

Subject : Approved Contract Change Order No. 65 - Supplemental No. 1

Enclosed please find the following items:

[ ]	Shop Drawings	[X]	Change Order	[ ]	Submittal(s)
[ ]	WSWD Report(s)	[ ]	Plans	[ ]	Other
[ ]	Daily Extra Work Reports	[ ]	Progress Payment		
[ ]	RFI Responses	[ ]	Dept. Letter		

Item	Date	Copies	Sheets	Description
1	21-May-2009	1	2	Approved Contract Change Order No. 65 - Supplemental No. 1

These Are Transmitted As Checked Below:

[ ]	For Approval or Action	[ ]	Approved as Submitted	[ ]	Resubmit ___	Copies for approval
[X]	For Your Use	[X]	Approved as Noted	[ ]	Submit ___	Copies for distribution
[ ]	As Requested	[ ]	Returned for Corrections	[ ]	Return ___	Corrected prints
[ ]	For Review & Comment	[ ]	Other	[ ]	Sign and Return	

Remarks:

Signed:
Andrew Yan

Copy To:
File: 05.03.02, 49.65S1.01

CONTRACT CHANGE ORDER

Change Requested by: Engineer

CCO 65	Suppl. No. 1	Contract No. 04 - 0120R4	Road SF-80-12.6/13.2	FED. AID LOC.: ACBRIM-080-1(097)N

force account.) Unless otherwise stated, rates for rental of equipment cover only such time as equipment is actually used and no allowance will be made for idle time. This last percentage shown is the net accumulated increase or decrease from the original quantity in the Engineer's Estimate.

Estimate of Decrease in Contract Item at Contract Price:

Item No. 40: BRIDGE REMOVAL

-1 LS (-100.00%) 3,500,000.00 /LS = -$3,500,000.00 (-100.00%)

The contractor agrees that the adjustment due under Section 4-1.03B, Eliminated Items, of the Standard Specifications for the elimination of Contract Bid Item 40: Bridge Removal shall be equal to zero.

Total Cost for Decrease in Contract Item.....($3,500,000.00)

Extra Work at Lump Sum:

Compensate the contractor for all additional labor, equipment and material costs incurred to remove the existing structure from Bent 48 to Bent YB4 as originally required by Bid Item 40, as a result of changed field conditions, escalation and delays. The contractor agrees to accept the lump sum of $12,727,660 as full compensation, including all markups, surcharges and profit, for all additional costs necessary to complete this work unless otherwise delineated in this change. The aforementioned lump sum shall include compensation for:

1. All labor, equipment and material escalation costs.
2. All Silverado Contractors time-related overhead costs.
3. Loss of anticipated revenue resulting from changes in steel and concrete salvage market prices.
4. Furnishing, installing, relocating, storing and removing all temporary supports systems.

The aforementioned lump sum shall include compensation for costs involved in working around, protecting, and repairing newly constructed columns, structures and facilities constructed under contract change orders 64, 73, 75 and 77.

It is expressly understood and agreed that the following work shall be compensated as provided under various existing and/or anticipated Contract Change Orders:

1. Flagging.
2. Traffic control.
3. Storm water pollution prevention compliance.
4. Engineering associated with temporary support design and bridge removal plan.
5. Furnishing and placing additional backfill as required outside the pay limits of the W5 footings due to the removal of the YB3 footings.

If required by the Engineer, installation and removal of cable bracing system at the upper deck, and displacement monitoring of the temporary support system shall be paid for under a separate change order.

The contractor agrees to accept the compensation outlined in this change as full, complete and equitable resolution for all issues, disputes and potential claims related to the demolition of the existing structure from Bent 48 to Bent YB4. No furthe compensation shall be allowed.

Total Cost of Extra Work at Lump Sum $12,727,660.00

STATE OF CALIFORNIA - DEPARTMENT OF TRANSPORTATION

CONTRACT CHANGE ORDER

Change Requested by: Engineer

CCO 65	Suppl. No. 1	Contract No. 04 - 0120R4	Road SF-80-12.6/13.2	FED. AID LOC.: ACBRIM-080-1(097)N

Estimated Cost: Increase ☑ Decrease ☐ **$9,227,660.00**

By reason of this order the time of completion will be adjusted as follows: Deferred

Submitted by

Signature	Resident Engineer BILL CASEY	Date 3-30-09

Approval Recommended by

Signature	SFOBB Construction Manager MIKE FORNER	Date 4-1-09

Engineer Approval by

Signature	SFOBB Construction Manager MIKE FORNER	Date 5/6/09

We the undersigned contractor, have given careful consideration to the change proposed and agree, if this proposal is approved, that we will provide all equipment, furnish the materials, except as may otherwise be noted above, and perform all services necessary for the work above specified, and will accept as full payment therefor the prices shown above.

NOTE: If you, the contractor, do not sign acceptance of this order, your attention is directed to the requirements of the specifications as to proceeding with the ordered work and filing a written protest within the time therein specified.

Contractor Acceptance by

Signature	(Print name and title) Daniel E. Homuck, President	Date 5/01/09

STATE OF CALIFORNIA - DEPARTMENT OF TRANSPORTATION

CONTRACT CHANGE ORDER MEMORANDUM

TO: MIKE FORNER / DEANNA VILCHECK	FILE: E.A. 04 - 0120R4
	CO-RTE-PM SF-80-12.6/13.2
FROM: BILL CASEY	FED. NO. ACBRIM-080-1(097)N
CCO#: 65 SUPPLEMENT#: 1 Category Code: CHPT	CONTINGENCY BALANCE (incl. this change) $59,303,131.05
COST: $9,227,660.00 INCREASE ☑ DECREASE ☐	HEADQUARTERS APPROVAL REQUIRED? ☑ YES ☐ NO
SUPPLEMENTAL FUNDS PROVIDED: $0.00	IS THIS REQUEST IN ACCORDANCE WITH ENVIRONMENTAL DOCUMENTS? ☑ YES ☐ NO
CCO DESCRIPTION: Bridge Removal From Bent 48 to YB3	PROJECT DESCRIPTION: CONSTRUCT ROUTE 80 TEMP BYPASS STRUCTURE

Original Contract Time:	Time Adj. This Change:	Previously Approved CCO Time Adjustments:	Percentage Time Adjusted: (including this change)	Total # of Unreconciled Deferred Time CCO(s): (including this change)
475 Day(s)	DEF Day(s)	1195 Day(s)	252 %	8

THIS CHANGE ORDER PROVIDES FOR:

compensating the contractor for all additional labor, equipment and material costs incurred to remove the existing structure from Bent 48 to Bent YB4.

This project, the Temporary Bypass Structure (TBS), was awarded in March 2004 to construct a detour that will allow for the tie in of the new east span of the San Francisco Oakland Bay Bridge to Yerba Buena Island. The TBS encompasses three main structures, the East Tie-In to the existing bridge, the West Tie-In (WTI) to Yerba Buena Island, and the Viaduct structure between the two tie ins.

Two separate Department strategy memorandums issued on December 14, 2006 entitled 'Strategy for South-South Detour Contract Completion' and December 25, 2006 entitled 'Recommendation to Construct Select Yerba Buena Island Transition Structure Foundations by Contract Change Order' were approved by Tony Anziano - Toll Bridge Program Manager, Richard Land - Chief Engineer, and the Toll Bridge Program Oversight Committee (TBPOC), which recommended the design of the ETI and WTI structures and enhancement of the Viaduct be assumed by the Department as opposed to the as-bid performance based contractor design and that a portion of the YBITS foundation work be performed under this contract by change order.

This change is necessary in order to compensate the contractor for all additional costs incurred as result of changed field conditions, delays, and escalation including:

1. All labor, equipment and material escalation costs.
2. All Silverado Contractors time-related overhead costs .
3. Loss of anticipated revenue resulting from changes in steel and concrete salvage market prices.
4. Furnishing, installing, relocating, storing and removing all temporary supports systems.

The aforementioned lump sum shall include compensation for all costs involved in working around, protecting, and repairing newly constructed columns, structures and facilities constructed under contract change orders 64, 73, 75 and 77.

The following associated work shall be compensated as provided under separate existing and/or pending contract change orders:

1. Flagging.
2. Traffic Control
3. Storm water pollution prevention compliance.
4. Engineering associated with temporary support design and bridge removal plan.
5. Furnishing and placing additional backfill as required at W5 footings.

If required by the Engineer, installation and removal of cable bracing system at the upper deck, and displacement monitoring of the temporary support system shall be paid for under a separate change order.

ADA Notice: For individuals with sensory disabilities, this document is available in alternate formats. For information call: (916) 654-6410 or TDD (916) 654-3880 or write

Compensation for this change shall be made as Extra Work at Agreed Lump Sum in the amount of $12,727,660.00, and by deleting Bid Item 40: Bridge Removal, for a total increase of $9,227,660.00, which can be financed through the Contingency Fund. This change constitutes full and equitable resolution for all issues, disputes and potential claims related to the demolition of the existing structure from Bent 48 to Bent YB4. Cost analyses and other cost related data are included in the associated file.

The total estimated cost of CCO 65, including all supplementals to date, is $9,402,660.00.

Adjustment of contract time is deferred pending completion of the work specified in this change as it may become the controlling operation in accordance with Section 8-1.07 "Liquidated Damages", of the Standard Specifications and Section 10-1.20 "Time Related Overhead (TRO)" of the Special Provisions.

Compensation for delays resulting from this work will be made in accordance with Section 8-1.09 "Right of Way Delays" of the Standard Specifications and Section 10-1.20 "Time Related Overhead" of the Special Provisions.

This change was concurred by Alec Melkonians - Asst. Project Manager and Hong Wong - Project Engineer. Authorization of this change provided from the TBPOC on April 2, 2009.

Maintenance concurrence is not required, as this work does not affect any permanent roadway features.

CONCURRED BY:		
Construction Engineer:	Bill Casey, Resident Engineer	Date 4-03-09
Bridge Engineer:	Mike Whiteside, Toll Bridge Design	Date
Project Engineer:	Hong Wong, PE	Date 3/23/09
Project Manager:	Alec Melkonians	Date 4/1/09
FHWA Rep.:		Date
Environmental:		Date
Other (specify):	Patrick Treacy, HQ Asst.Const.Co	Date
Other (specify):		Date
District Prior Approval By:		Date
HQ (Issue Approve) By:	Bob Molera, HQ CCO Engineer	Date
Resident Engineer's Signature:		Date 4-03-09

ESTIMATE OF COST	THIS REQUEST	TOTAL TO DATE
ITEMS	($3,500,000.00)	($3,500,000.00)
FORCE ACCOUNT	$0.00	$175,000.00
AGREED PRICE	$12,727,660.00	$12,727,660.00
ADJUSTMENT	$0.00	$0.00
TOTAL	$9,227,660.00	$9,402,660.00

FEDERAL PARTICIPATION

☐ PARTICIPATING ☐ PARTICIPATING IN PART ☑ NONE
☐ NON-PARTICIPATING (MAINTENANCE) ☐ NON-PARTICIPATING

FEDERAL SEGREGATION (if more than one Funding Source or P.I.P. type)
☐ CCO FUNDED PER CONTRACT ☐ CCO FUNDED AS FOLLOWS

FEDERAL FUNDING SOURCE	PERCENT

ADA Notice: For individuals with sensory disabilities, this document is available in alternate formats. For information call: (916) 654-6410 or TDD (916) 654-3880 or write

STATE OF CALIFORNIA - DEPARTMENT OF TRANSPORTATION

CONTRACT CHANGE ORDER

Change Requested by: Engineer

CCO 66	Suppl. No. 0	Contract No. 04 - 0120R4	Road SF-80-12.6/13.2	FED. AID LOC.: ACBRIM-080-1(097)N

To: **CC MYERS INC**

You are directed to make the following changes from the plans and specifications or do the following described work not included in the plans and specifications for this contract. ***NOTE: This change order is not effective until approved by the Engineer.***

Description of work to be done, estimate of quantities and prices to be paid. (Segregate between additional work at contract price, agreed price and force account.) Unless otherwise stated, rates for rental of equipment cover only such time as equipment is actually used and no allowance will be made for idle time. This last percentage shown is the net accumulated increase or decrease from the original quantity in the Engineer's Estimate.

Extra Work at Force Account:

As authorized by the Engineer and in accordance with Section 10-1.18 "Photo Survey/Public Relations" of the Special Provisions, provide professional assistance, and furnish the following time-lapse photography / video equipment, and other necessary equipment:

1) 10 ea - VB-C50iR pan-tilt-zoom cameras
2) 10 ea - VFD8C10 Fusion Dome outdoor enclosure for the VB-C50iR camera
3) 8 ea - APM 3 Aluminum pole mount adpter for camera
4) 6 ea - T2428100WP 24/28 VAC power supply 100VA in weatherproof NEMA enclosure; for 120 VAC input
5) 6 ea - TR-MAX Tranzeo wireless bridge kit; maximum range; configured wireless bridge pair, flat panel; power over ethernet; 30 feet
6) 4 ea - 29db dish antennae upgrade for 3-mile link over Bay
7) 1 ea - CAT-5 KIT 1000-feet CAT5 kit: includes 50 RJ-45 connectors, 5 F/F coupler, 1000-feet ethernet cable, crimp tool TRENDnet TC-NT2 Professional Network Cable Tester
8) 1 ea - Server, Toshiba laptop for SiteProxy digital image archiving and viewing; 80+ GB, 1 G; Giga Ethernet, DVD-RW; with XP Pro; 1-year parts / service warranty.
9) 1 ea - 5-port mini ethernet switch
10) 4 ea - Wireless 3G router for Sprint 3G/EVDO service; PX-500 wireless card; external antennae; activation
11) 4 ea - Two-year wireless unlimited serice; used dynamice DNS service; renewable
12) 4 ea - Polycarbonate electronics enclosure; 15x18x10
13) 1 ea - Miscellaneous Mounting Hardware, cables, & accessories
14) 1 ea - SiteProxy 5/25 - 11 camera license;
15) 80 Hours - Configuration, on-site support, training, maintenance assistance

The work shall also include configuration, setup, and training of State personnel to operate the video equipment. Training shall be provided for the software, equipment, and start-up inspection/support by a qualified individual familiar with the above software and equipment. Training to include, at a minimum, 5 hours of initial training for administration of the SiteProxy software.

In accordance with Section 10-1.18 "Photo Survey/Public Relations" of the Special Provisions, payment for this work will be paid for as extra work as provided in Section 4-1.03D, Extra Work, of the Standard Specifications, and Section 5-1.24, Force Account Payment, of the Special Provisions, and no other compensation will be allowed therefor.

No adjustment in contract time will be made since this work is not a controlling operation.

Estimated Cost of Extra Work at Force Account $175,000.00

006352 AUG 16 5

RECEIVED

STATE OF CALIFORNIA - DEPARTMENT OF TRANSPORTATION

CONTRACT CHANGE ORDER

Change Requested by: Engineer

CCO 66	Suppl. No. 0	Contract No. 04 - 0120R4	Road SF-80-12.6/13.2	FED. AID LOC.: ACBRIM-080-1(097)N

Estimated Cost: Increase ☑ Decrease ☐ **$175,000.00**

By reason of this order the time of completion will be adjusted as follows: 0 days

Submitted by

Signature	Resident Engineer	Date
M. U. Anigol	MAHANTESH ANIGOL	7/5/07

Approval Recommended by

Signature	Area Construction Manager	Date
	JASON TOM	7/11/07

Engineer Approval by

Signature	Area Construction Manager	Date
	~~JASON TOM~~ Dennis Turcton	7/18/07

We the undersigned contractor, have given careful consideration to the change proposed and agree, if this proposal is approved, that we will provide all equipment, furnish the materials, except as may otherwise be noted above, and perform all services necessary for the work above specified, and will accept as full payment therefor the prices shown above.

NOTE: If you, the contractor, do not sign acceptance of this order, your attention is directed to the requirements of the specifications as to proceeding with the ordered work and filing a written protest within the time therein specified.

Contractor Acceptance by

Signature	(Print name and title)	Date
	DANIEL E. HIMICK, PRESIDENT	7/11/07

STATE OF CALIFORNIA - DEPARTMENT OF TRANSPORTATION

CONTRACT CHANGE ORDER MEMORANDUM

DATE: 7/9/2007 Page 1 of 2

TO: PETER SIEGENTHALER / JASON TOM	FILE: **E.A.** 04 - 0120R4
	CO-RTE-PM SF-80-12.6/13.2
FROM: MAHANTESH ANIGOL	**FED. NO.** ACBRIM-080-1(097)N
CCO#: **66** SUPPLEMENT#: **0** Category Code: **AXZZ**	CONTINGENCY BALANCE (incl. this change) **$7,184,520.67**
COST: **$175,000.00** INCREASE ☑ DECREASE ☐	HEADQUARTERS APPROVAL REQUIRED? ☐ YES ☑ NO
SUPPLEMENTAL FUNDS PROVIDED: **$0.00**	IS THIS REQUEST IN ACCORDANCE WITH ENVIRONMENTAL DOCUMENTS? ☑ YES ☐ NO
CCO DESCRIPTION: Traffic Management Plan Video Equipment	**PROJECT DESCRIPTION:** CONSTRUCT ROUTE 80 TEMP BYPASS STRUCTURE

Original Contract Time:	Time Adj. This Change:	Previously Approved CCO Time Adjustments:	Percentage Time Adjusted: (including this change)	Total # of Unreconciled Deferred Time CCO(s): (including this change)
475 Day(s)	**0** Day(s)	**381** Day(s)	**80** %	**7**

THIS CHANGE ORDER PROVIDES FOR:

The Contractor to provide time-lapse video, still photography, video survey equipment, materials, and training to document and monitor construction activities, progress and completion of construction within the San Francisco Oakland Bay Bridge (SFOBB) eastern corridor.

The South South Detour (SSD) project will require a three-day full closure of the entire existing SFOBB bridge on Labor Day weekend 2007. The video and photography equipment and services will capture real time, and time lapse photography to document the demolition-out/ roll-in of the West Tie-In (WTI) superstructure prior to, and during the Labor Day shut down. The equipment included in this change order will monitor on-site progress of the Yerba Buena Island construction activities from the SSD command center located on Pier 7 in Oakland. The equipment will also monitor regional traffic as part of the WTI Phase 1 Labor Day shut down as an integral part of the Traffic Management Plan.

Salvage value of equipment is $0.00 at end of project. Cost analysis is available on file.

In accordance with Section 10-1.18 "Photo Survey/Public Relations" of the Special Provisions, this work will be paid for as extra work at force account, for the estimated cost of $175,000.00, which can be financed from contingency funds.

Time adjustment is not warranted, as this change does not affect the controlling operation(s) on this contract.

Maintenance concurrence is not necessary for this change.

The Resident Engineer recommends that this change order be approved. This change order was requested by the Project Manager, Alec Melkonians. This change was discussed and concurred by Ken Terpstra – Project Manager (written concurrence pending), and concurred by SFOBB Public Information Officer, Bart Ney on 06/26/07, and the Construction Traffic Manager, Raoul Maltez in March 2007.

ADA Notice: For individuals with sensory disabilities, this document is available in alternate formats. For information call: (916) 654-6410 or TDD (916) 654-3880 or write Records and Forms Management, 1120 N Street, MS-89, Sacramento, CA 95814.

CONCURRED BY:		
Construction Engineer:	Mahantesh Anigol	Date 7/12/07
Bridge Engineer:	William S. Casey	Date 7-12-07
Project Engineer:	Alec Melkonians	Date 6/18/07
Project Manager:		Date
FHWA Rep.:		Date
Environmental:		Date
Other (specify):	Raoul Maltez, Construction Traffic	Date 6/29/07
Other (specify):	Bart Ney, D4 Public Information Off	Date 6/26/07
District Prior Approval By:		Date
HQ (Issue Approve) By:		Date
Resident Engineer's Signature:	M. U. Anigol	Date 7/12/07

ESTIMATE OF COST

	THIS REQUEST	TOTAL TO DATE
ITEMS	$0.00	$0.00
FORCE ACCOUNT	$175,000.00	$175,000.00
AGREED PRICE	$0.00	$0.00
ADJUSTMENT	$0.00	$0.00
TOTAL	$175,000.00	$175,000.00

FEDERAL PARTICIPATION

☐ PARTICIPATING ☐ PARTICIPATING IN PART ☐ NONE
☐ NON-PARTICIPATING (MAINTENANCE) ☐ NON-PARTICIPATING

FEDERAL SEGREGATION (if more than one Funding Source or P.I.P. type)
☐ CCO FUNDED PER CONTRACT ☐ CCO FUNDED AS FOLLOWS

FEDERAL FUNDING SOURCE PERCENT

ADA Notice: For individuals with sensory disabilities, this document is available in alternate formats. For information call: (916) 654-6410 or TDD (916) 654-3880 or write Records and Forms Management, 1120 N Street, MS-89, Sacramento, CA 95814.

STATE OF CALIFORNIA - DEPARTMENT OF TRANSPORTATION

CONTRACT CHANGE ORDER

Change Requested by: Engineer

CCO 66	Suppl. No. 1	Contract No. 04 - 0120R4	Road SF-80-12.6/13.2	FED. AID LOC.: ACBRIM-080-1(097)N

To: **CC MYERS INC**

You are directed to make the following changes from the plans and specifications or do the following described work not included in the plans and specifications for this contract. ***NOTE: This change order is not effective until approved by the Engineer.***

Description of work to be done, estimate of quantities and prices to be paid. (Segregate between additional work at contract price, agreed price and force account.) Unless otherwise stated, rates for rental of equipment cover only such time as equipment is actually used and no allowance will be made for idle time. This last percentage shown is the net accumulated increase or decrease from the original quantity in the Engineer's Estimate.

Extra Work at Force Account:

Provide additional funds for professional photographic and video documentaion services per the original Contract Change Order No. 66 and as authorized by the Engineer.

No adjustment in contract time will be made since this work is not a controlling operation.

Estimated Cost of Extra Work at Force Account $200,000.00

Estimated Cost: Increase ☑ Decrease ☐ **$200,000.00**

By reason of this order the time of completion will be adjusted as follows: 0 days

Submitted by

Signature	Resident Engineer	Date
	BILL CASEY	3-31-08

Approval Recommended by

Signature	Area Construction Manager	Date
	DENNIS TURCHON	4/14/08

Engineer Approval by

Signature	Area Construction Manager	Date
	DENNIS TURCHON	4/14/08

We the undersigned contractor, have given careful consideration to the change proposed and agree, if this proposal is approved, that we will provide all equipment, furnish the materials, except as may otherwise be noted above, and perform all services necessary for the work above specified, and will accept as full payment therefor the prices shown above.

NOTE: If you, the contractor, do not sign acceptance of this order, your attention is directed to the requirements of the specifications as to proceeding with the ordered work and filing a written protest within the time therein specified.

Contractor Acceptance by

Signature	(Print name and title)	Date
NOT APPLICABLE	N/A	—

STATE OF CALIFORNIA - DEPARTMENT OF TRANSPORTATION

RECEIVED

CONTRACT CHANGE ORDER MEMORANDUM

DATE: 3/26/2008

007651 JUN 20 8

TO: MIKE FORNER / DENNIS TURCHON

FROM: BILL CASEY

FILE: E.A. 04 - 0120R4

CO-RTE-PM SF-80-12.6/13.2

FED. NO. ACBRIM-080-1(097)N

CCO#: **66** | SUPPLEMENT#: **1** | Category Code: **AXZZ**

CONTINGENCY BALANCE (incl. this change) **$46,342,937.12**

COST: **$200,000.00** INCREASE ☑ DECREASE ☐

HEADQUARTERS APPROVAL REQUIRED? ☑ YES ☐ NO

SUPPLEMENTAL FUNDS PROVIDED: **$0.00**

IS THIS REQUEST IN ACCORDANCE WITH ENVIRONMENTAL DOCUMENTS? ☑ YES ☐ NO

CCO DESCRIPTION:
Add Funds for TMP Video Services

PROJECT DESCRIPTION:
CONSTRUCT ROUTE 80 TEMP BYPASS STRUCTURE

Original Contract Time:	Time Adj. This Change:	Previously Approved CCO Time Adjustments:	Percentage Time Adjusted: (including this change)	Total # of Unreconciled Deferred Time CCO(s): (including this change)
475 Day(s)	**0** Day(s)	**1195** Day(s)	**252** %	**7**

THIS CHANGE ORDER PROVIDES FOR:

Providing additional funds to the Contractor for time-lapse video and still photography services to document and monitor construction activities, progress, and completion of construction within the San Francisco Oakland Bay Bridge (SFOBB) eastern corridor.

Two separate Department strategy memorandums, issued on December 14, 2006 and December 25, 2006, and approved by Tony Anziano - Toll Bridge Program Manager, Richard Land - Chief Engineer, and the Toll Bridge Program Oversight Committee (TBPOC), resulted in additional work being added and other work being re-sequenced on this project. This strategy led the contract to be extended through late 2010, approximately 5 years past the original completion date.

This change order is necessary to continue the time-lapse video and still photography services required to document and monitor construction activities within the San Francisco Oakland Bay Bridge (SFOBB) eastern corridor since the original funds allotted have been depleted.

In accordance with Section 10-1.18 "Photo Survey/Public Relations" of the Special Provisions, this work will be paid for as extra work at force account, for an estimated cost of 200,000.00, which can be financed from contingency funds. A cost analysis is in the project records.

The Resident Engineer recommends that this change order be approved. This change order was requested by Alec Melkonians - Project Manager, per memorandum dated 3/14/08. Maintenance concurrence is not necessary for this change.

The Contractor's signature is not required for additional funds for Extra Work at Force Account change orders. Therefore this change order is being issued unilaterally.

No adjustment of the contract time is warranted, as this change does not affect the controlling operation.

CONCURRED BY:

Construction Engineer:		Date
Bridge Engineer:		Date
Project Engineer:		Date
Project Manager:	Alec Melkonians	Date 3/14/08
FHWA Rep.:		Date
Environmental:		Date
Other (specify):		Date
Other (specify):		Date
District Prior Approval By:		Date
HQ (Issue Approve) By:	Ken Darby, HQ CCO Engineer	Date 4/08
Resident Engineer's Signature:		Date 3-31-08

ESTIMATE OF COST

	THIS REQUEST	TOTAL TO DATE
ITEMS	$0.00	$0.00
FORCE ACCOUNT	$200,000.00	$375,000.00
AGREED PRICE	$0.00	$0.00
ADJUSTMENT	$0.00	$0.00
TOTAL	$200,000.00	$375,000.00

FEDERAL PARTICIPATION

☐ PARTICIPATING ☐ PARTICIPATING IN PART ☐ NONE
☐ NON-PARTICIPATING (MAINTENANCE) ☑ NON-PARTICIPATING

FEDERAL SEGREGATION (if more than one Funding Source or P.I.P. type)
☑ CCO FUNDED PER CONTRACT ☐ CCO FUNDED AS FOLLOWS

FEDERAL FUNDING SOURCE	PERCENT

ADA Notice: For individuals with sensory disabilities, this document is available in alternate formats. For information call: (916) 654-6410 or TDD (916) 654-3880 or write

DEPARTMENT OF TRANSPORTATION – District 4 Toll Bridge Program
325 Burma Rd.
Oakland, CA 94607
Telephone (510) 622-4200 Fax (510) 622-4266

LETTER OF TRANSMITTAL

To: CC MYERS INC
3286 FITZGERALD ROAD
RANCHO CORDOVA CA 95741

Attn: Bob Coupe

Date: 22-Sep-2009

Contract No: 04-0120R4
04-SF-80-12.6-13.2

Job Name: South – South Detour

Transmittal No.: 05.03.02-001778

Subject : Approved Contract Change Order No. 66 -Supplemental No. 2

Enclosed please find the following items:

[ ]	Shop Drawings	[X]	Change Order	[ ]	Submittal(s)
[ ]	WSWD Report(s)	[ ]	Plans	[ ]	Other
[ ]	Daily Extra Work Reports	[ ]	Progress Payment		
[ ]	RFI Responses	[ ]	Dept. Letter		

Item	Date	Copies	Sheets	Description
1	22-Sep-2009	1	1	Approved Contract Change Order No. 66 -Supplemental No. 2

These Are Transmitted As Checked Below:

[ ]	For Approval or Action	[ ]	Approved as Submitted	[ ]	Resubmit	___	Copies for approval
[X]	For Your Use	[X]	Approved as Noted	[ ]	Submit	___	Copies for distribution
[ ]	As Requested	[ ]	Returned for Corrections	[ ]	Return	___	Corrected prints
[ ]	For Review & Comment	[ ]	Other	[ ]	Sign and Return		

Remarks:

Signed:

Andrew Yan

Copy To:
File: 05.03.02, 49.66S2.01

STATE OF CALIFORNIA - DEPARTMENT OF TRANSPORTATION

CONTRACT CHANGE ORDER

Change Requested by: Engineer

CCO 66	Suppl. No. 2	Contract No. 04 - 0120R4	Road SF-80-12.6/13.2	FED. AID LOC.: ACBRIM-080-1(097)N

To: **CC MYERS INC**

You are directed to make the following changes from the plans and specifications or do the following described work not included in the plans and specifications for this contract. ***NOTE: This change order is not effective until approved by the Engineer.***

Description of work to be done, estimate of quantities and prices to be paid. (Segregate between additional work at contract price, agreed price and force account.) Unless otherwise stated, rates for rental of equipment cover only such time as equipment is actually used and no allowance will be made for idle time. This last percentage shown is the net accumulated increase or decrease from the original quantity in the Engineer's Estimate.

Extra Work at Force Account:

As authorized by the Engineer, provide additional funds for professional photographic and video documentation services per the Original Contract Change Order No. 66.

Estimated cost of Extra Work at Force Account $200,000.00

Estimated Cost: **Increase** ☑ **Decrease** ☐ **$200,000.00**

By reason of this order the time of completion will be adjusted as follows: 0 days

Submitted by		
Signature	**Resident Engineer** BILL CASEY	**Date** 9-15-09
Approval Recommended by		
Signature Deanna Vilcheck	**Area Construction Manager** DEANNA VILCHECK	**Date** 9/15/09
Engineer Approval by		
Signature Deanna Vilcheck	**Area Construction Manager** DEANNA VILCHECK	**Date** 9/17/09

We the undersigned contractor, have given careful consideration to the change proposed and agree, if this proposal is approved, that we will provide all equipment, furnish the materials, except as may otherwise be noted above, and perform all services necessary for the work above specified, and will accept as full payment therefor the prices shown above.

NOTE: If you, the contractor, do not sign acceptance of this order, your attention is directed to the requirements of the specifications as to proceeding with the ordered work and filing a written protest within the time therein specified.

Contractor Acceptance by		
Signature N/A	**(Print name and title)** N/A	**Date** N/A

STATE OF CALIFORNIA - DEPARTMENT OF TRANSPORTATION

CONTRACT CHANGE ORDER MEMORANDUM

DATE: 9/2/2009 Page 1 of 1

TO: MIKE FORNER / DEANNA VILCHECK	FILE: E.A. 04 - 0120R4
FROM: BILL CASEY	CO-RTE-PM SF-80-12.6/13.2
	FED. NO. ACBRIM-080-1(097)N
CCO#: 66 SUPPLEMENT#: 2 Category Code: CXXX	CONTINGENCY BALANCE (incl. this change) **$56,274,154.59**
COST: **$200,000.00** INCREASE ☑ DECREASE ☐	HEADQUARTERS APPROVAL REQUIRED? ☑ YES ☐ NO
SUPPLEMENTAL FUNDS PROVIDED: **$0.00**	IS THIS REQUEST IN ACCORDANCE WITH ENVIRONMENTAL DOCUMENTS? ☑ YES ☐ NO
CCO DESCRIPTION: Additional Funds	**PROJECT DESCRIPTION:** CONSTRUCT ROUTE 80 TEMP BYPASS STRUCTURE

Original Contract Time:	Time Adj. This Change:	Previously Approved CCO Time Adjustments:	Percentage Time Adjusted: (including this change)	Total # of Unreconciled Deferred Time CCO(s): (including this change)
475 Day(s)	**0** Day(s)	**1195** Day(s)	**252** %	**7**

THIS CHANGE ORDER PROVIDES FOR:

Providing additional funds.

Two separate Department strategy memorandums, issued on December 14, 2006 and December 25, 2006, and approved by Tony Anziano - Toll Bridge Program Manager, Richard Land - Chief Engineer, and the Toll Bridge Program Oversight Committee (TBPOC), resulted in additional work being added and other work being re-sequenced on this project. This strategy led the contract to be extended through late 2010, approximately 5 years past the original completion date.

This change order is necessary to continue the time-lapse video especially the Roll In/Roll Out construction operation and still photography services required to document and monitor construction activities within the San Francisco Oakland Bay Bridge (SFOBB) eastern corridor. In addition, this request is to pay all oustanding bills in the holding file since the original and Supplemental funds allotted have been depleted.

In accordance with Section 10-1.18 "Photo Survey/Public Relations" of the Special Provisions, this work will be paid for as extra work at force account, for an estimated cost of 200,000.00, which can be financed from contingency funds.

The Contractor's signature is not required for additional funds request for Extra Work at Force Account change orders, therefore, this change order is being issued unilaterally.

Maintenance concurrence is not required since it does not affect any permanent roadway features on the project.

No adjustment of the contract time is warranted, as this change does not affect the controlling operation.

CONCURRED BY:		
Construction Engineer:	BILL CASEY R.E.	Date 9-15-09
Bridge Engineer:		Date
Project Engineer:	Hong Wong, PE	Date 9/2/09
Project Manager:	Alec Melkonians	Date 9/2/09
FHWA Rep.:		Date
Environmental:		Date
Other (specify):		Date
Other (specify):		Date
District Prior Approval By:		Date
HQ (Issue Approve) By:	~~Bob~~ LARRY SALHANEY	Date 9/17/09
Resident Engineer's Signature:		Date 9-15-09

ESTIMATE OF COST

	THIS REQUEST	TOTAL TO DATE
ITEMS	$0.00	$0.00
FORCE ACCOUNT	$200,000.00	$575,000.00
AGREED PRICE	$0.00	$0.00
ADJUSTMENT	$0.00	$0.00
TOTAL	$200,000.00	$575,000.00

FEDERAL PARTICIPATION

☐ PARTICIPATING ☐ PARTICIPATING IN PART ☑ NONE
☐ NON-PARTICIPATING (MAINTENANCE) ☐ NON-PARTICIPATING

FEDERAL SEGREGATION (if more than one Funding Source or P.I.P. type)
☐ CCO FUNDED PER CONTRACT ☐ CCO FUNDED AS FOLLOWS

FEDERAL FUNDING SOURCE	PERCENT

ADA Notice: For individuals with sensory disabilities, this document is available in alternate formats. For information call: (916) 654-6410 or TDD (916) 654-3880 or write Records and Forms Management, 1120 N Street, MS-89, Sacramento, CA 95814.

CONTRACT CHANGE ORDER

Change Requested by: Engineer

CCO 67	Suppl. No. 0	Contract No. 04 - 0120R4	Road SF-80-12.6/13.2	FED. AID LOC.: ACBRIM-080-1(097)N

To: CC MYERS INC

You are directed to make the following changes from the plans and specifications or do the following described work not included in the plans and specifications for this contract. ***NOTE: This change order is not effective until approved by the Engineer.***

Description of work to be done, estimate of quantities and prices to be paid. (Segregate between additional work at contract price, agreed price and force account.) Unless otherwise stated, rates for rental of equipment cover only such time as equipment is actually used and no allowance will be made for idle time. This last percentage shown is the net accumulated increase or decrease from the original quantity in the Engineer's Estimate.

Extra Work at Force Account:

In accordance with Section 5-1.14 "Contractor Design" of the Special Provisions, modify the Viaduct superstructure design to accommodate the East Tie-In Roll-Out/Roll-In design as per Sheets 3 through 10 of this change order. The two easterly most panels of Span 51 shall be redesigned and re-detailed. The eastern leading edge of the Viaduct needs to be modified to match the bearing and offset provided. The upper and lower deck contours should remain unchanged.

The scope of work shall include:

1. Adjust final 3-D models from CCO No. 50 to reflect the modified geometry.

2. Perform Service Load (BDS Group Load combinations 1 through 7) analysis and tabulate results for the affected components.

3. Design, draft, and independently check the modified members.

Additional work as follows:

1. Confirm the deck viaduct contours match those provided on Sheets 3 and 4 (of 10) of this Contract Change Order.

2. Modify the Truss, Floor Beam, and Stringer geometry east of Floor Beam 28 to accommodate the horizontal geometry defined by the bearing and offset from the center of the Bent 52 column (south) shown on Sheets 5 and 6 (of 10) of this Contract Change Order.

3. Develop leading edge details for the upper and lower deck to accommodate the sliding deck plate type joint schematically depicted on Sheets 7 and 9 (of 10) of this Contract Change Order.

4. Modify the upper and lower truss chords geometry between FB 27 and 29 to accommodate for the revised cantilever design.

5. Confirm truss chord sizes east of FB 27 are adequate considering the new geometry. Modify chords as necessary.

6. Re-design/Re-detail FB 29 to accommodate the leading edge of the viaduct as shown on Sheet 10 (of 10) of this Contract Change Order.

7. Evaluate the need for "X" type truss diagonals between FB 27 & 28 and FB 28 & 29. Redesign the concentric diagonal connection if it is still required.

8. Redesign and re-detail all affected truss/FB connections between FB 27 to 29.

9. Check bearing sizes if any significant difference in the DL and LL reactions are created by the change in geometry. Evaluate impacts on Bent 52 design if significant change in bearing axial load occurs.

The Contractor shall prepare and submit the following Design Submittal Changes to the Engineer for acceptance and authorization of construction:

CONTRACT CHANGE ORDER

Change Requested by: Engineer

CCO 67	Suppl. No. 0	Contract No. 04 - 0120R4	Road SF-80-12.6/13.2	FED. AID LOC.: ACBRIM-080-1(097)N

1. Preliminary Design Submittal:
a. Detailed preliminary design drawings
b. Expansion joint movements at the Viaduct/ETI Interface

2. Unchecked Details
a. Unchecked Plans
b. Revised design calculations
i. Hand calculations
ii. Designer SAP model results including D/C ratios
iii. Designer SAP model electronic Copy

3. Checked details
a. Checked Plans
b. Revised design calculations
i. Final design and independent check calculations
ii. Designer/Checkers SAP model results D/C ratios
iii. Designer/Checkers SAP model electronic Copy

In accordance with the "Design Review Process", of Section 5-1.14 "Contractor Design" of the Special Provisions, when the final design submittal changes are approved by the Contractors Engineer, and authorized for construction by the Engineer, the Contractor shall revise the Construction Submittal to incorporate this change.

Estimated Cost: Increase ☑ Decrease ☐ **$800,000.00**

By reason of this order the time of completion will be adjusted as follows: 0 days

Submitted by

Signature	Resident Engineer	Date
M.C. Anigol	MAHANTESH ANIGOL	7/10/07

Approval Recommended by

Signature	Area Construction Manager	Date
	DENNIS TURCHON	7/11/07

Engineer Approval by

Signature	Area Construction Manager	Date
	DENNIS TURCHON	7/27/07

We the undersigned contractor, have given careful consideration to the change proposed and agree, if this proposal is approved, that we will provide all equipment, furnish the materials, except as may otherwise be noted above, and perform all services necessary for the work above specified, and will accept as full payment therefor the prices shown above.

NOTE: If you, the contractor, do not sign acceptance of this order, your attention is directed to the requirements of the specifications as to proceeding with the ordered work and filing a written protest within the time therein specified.

Contractor Acceptance by

Signature	(Print name and title)	Date
	DANIEL E. Hinrick, PRESIDENT	8/07/07

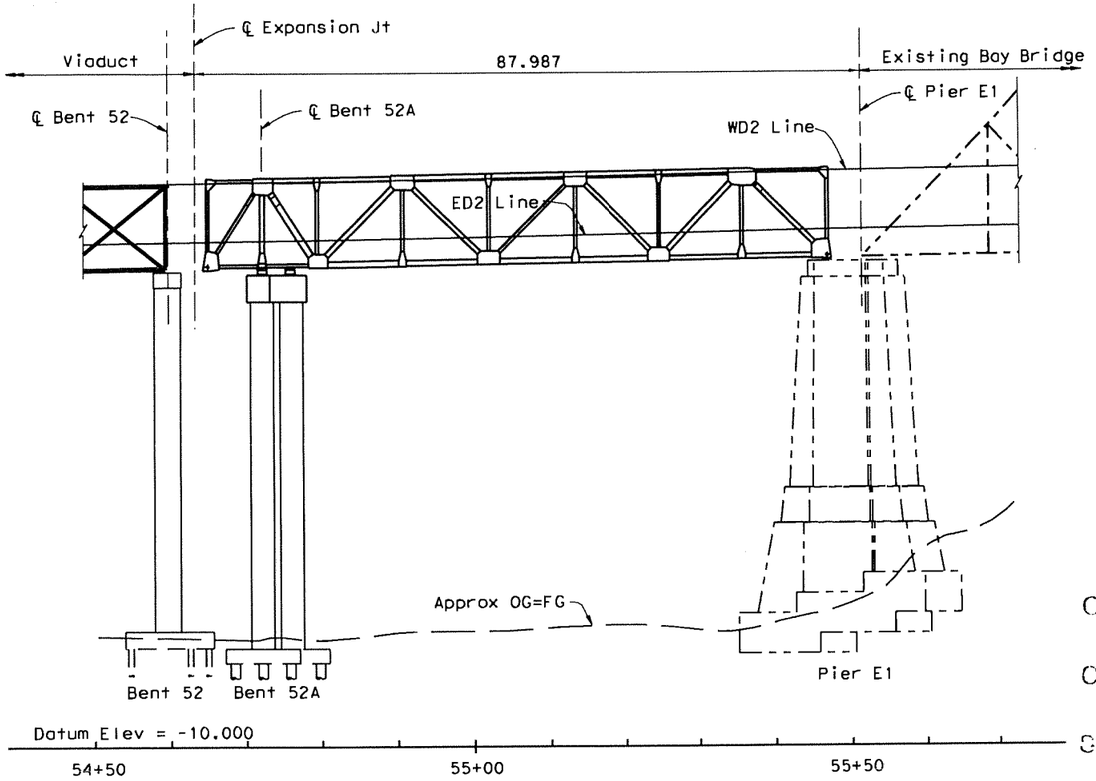

PROJECTED ELEVATION

1:400

Note: Longitudinal dimensions measured along "WD2" or "ED2" line.
For clarity, north truss is not shown.

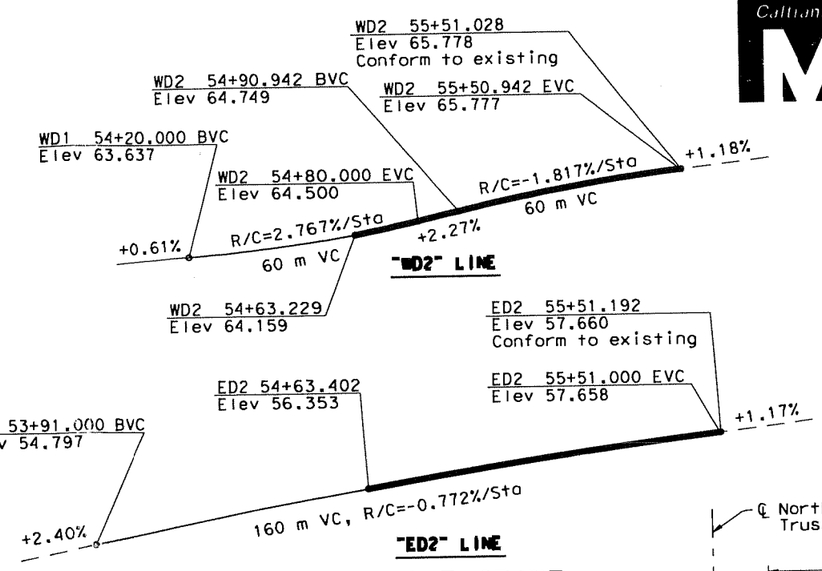

PROFILE GRADE

NO SCALE

CONTRACT NO. 04-0120R4

CONTRACT CHANGE ORDER NO. 67

SHEET 3 OF 10

LEGEND:

- Indicates Existing Structure
- Indicates Bridge Removal
- Indicates Deck Drain (Type D-3), tot x
- Indicates Westbound Traffic
- Indicates Eastbound Traffic
- Indicates Minimum Clearance

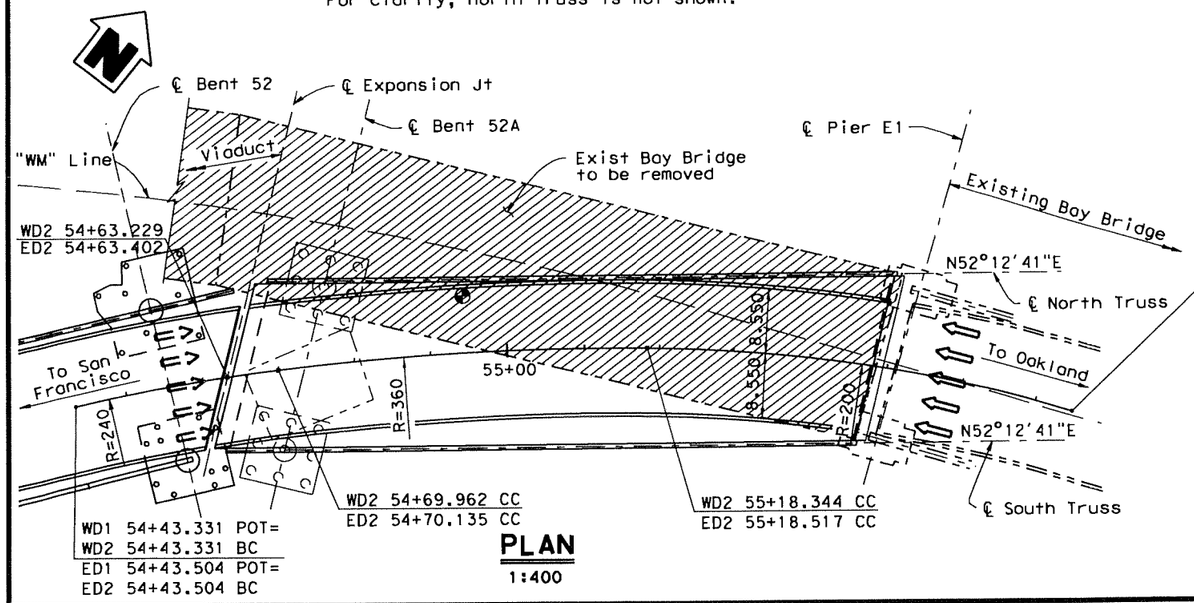

PLAN

1:400

WD2 55+75.149 EC=
WD1 55+75.755 POT
ED2 55+75.322 EC=
ED1 55+75.927 POT

Notes:

1. The Contractor shall verify all controlling field dimensions before ordering or fabricating any material.
2. All components are capacity protected except for the concrete columns, which are designed for ductile behavior.
3. For General Notes, Pile Data Table, See "Index to Plans" sheet.
4. For section showing minimum clearance, See "Typical Section" sheet.

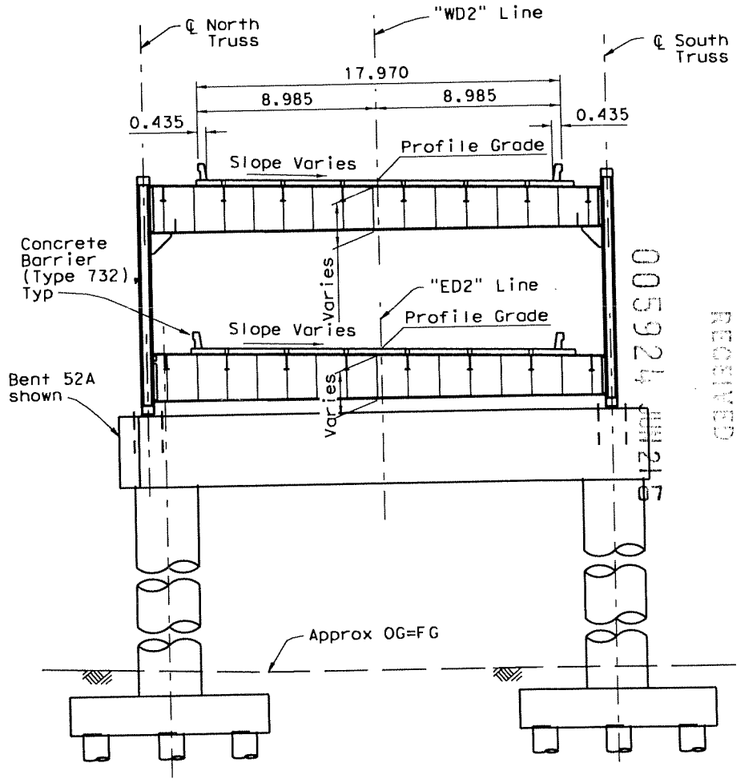

TYPICAL SECTION

1:150

Note: Dimensions measured perpendicular to "WD2" or "ED2" line.

ALL DIMENSIONS ARE IN METERS UNLESS OTHERWISE SHOWN

04	SF	80	12.6/13.2						

REGISTERED CIVIL ENGINEER

PLANS APPROVAL DATE

REGISTERED PROFESSIONAL ENGINEER — No. Exp. CIVIL — STATE OF CALIFORNIA

The State of California or its officers or agents shall not be responsible for the accuracy or completeness of electronic copies of this plan sheet.

T.Y. LIN / MOFFATT & NICHOL
Two Harrison Street, Suite 500
San Francisco, CA 94105

PRELIMINARY NOT FOR CONSTRUCTION

RECEIVED 05/24/2007

SAN FRANCISCO OAKLAND BAY BRIDGE
EAST SPAN SEISMIC SAFETY PROJECT

EAST TIE-IN

GENERAL PLAN

DESIGN OVERSIGHT	DESIGN	BY	CHECKED	LOAD FACTOR DESIGN	LIVE LOADING: HS20-44 AND ALTERNATIVE AND PERMIT DESIGN LOAD		PREPARED FOR THE STATE OF CALIFORNIA DEPARTMENT OF TRANSPORTATION	PROJECT MANAGER	BRIDGE NO. 34-0006 (TEMP)
	DETAILS	BY	CHECKED	LAYOUT	BY	CHECKED			KP(PM) 12.6
SIGN OFF DATE	QUANTITIES	BY	CHECKED	SPECIFICATIONS	BY	PLANS AND SPECS COMPARED		CU EA 0120R4	DISREGARD PRINTS BEARING EARLIER REVISION DATES

REVISION DATES (PRELIMINARY STAGE ONLY)

SHEET T1 OF 136

DESIGN GENERAL PLAN SHEET (METRIC) (REV.3/1/99)
@DATE@ @TIME@ Pen Table File

ORIGINAL SCALE IN MILLIMETERS FOR REDUCED PLANS 0 10 20 30 40 50 60 70 80 90 100

FILE => X:\ETI\BB_South South Detour\Caltrans\03-09-2007\aagp01.dgn

DATE PLOTTED => 03/12/2007 TIME PLOTTED => 08:44:35 AM

USERNAME => dlee

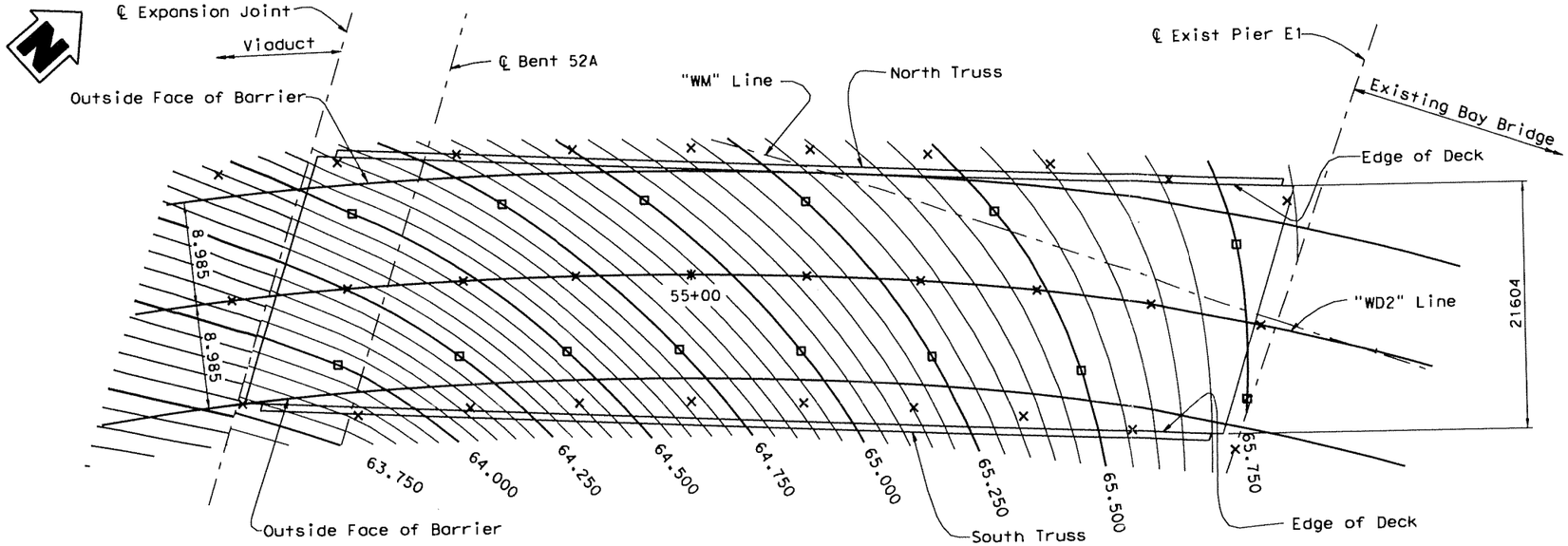

WESTBOUND CONTOUR PLAN

1:250

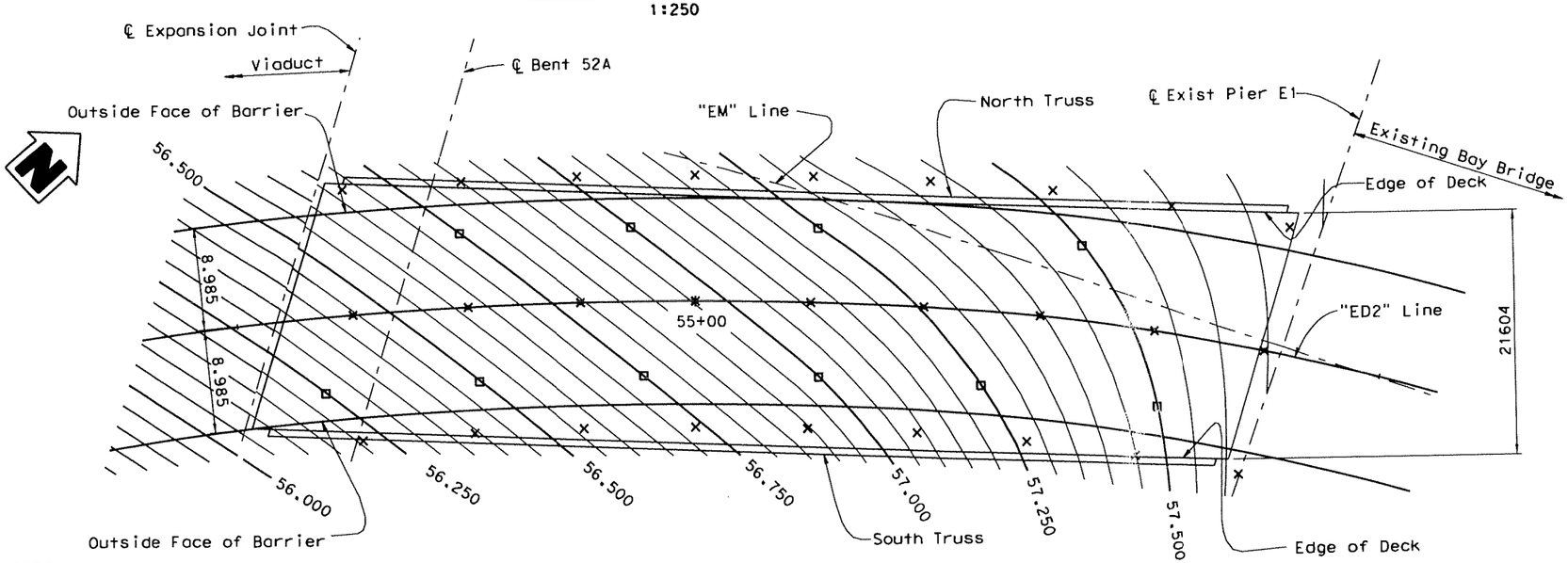

EASTBOUND CONTOUR PLAN

1:250

NOTES:

- □ - Indicates 250 mm contours
- × = 10 m intervals along station line
- Contours do not include camber
- Contour Interval = 50 mm
- Contours are shown for top of wearing surface elevation.
- The Contractor shall verify all controlling field dimensions before ordering or fabricating any material.

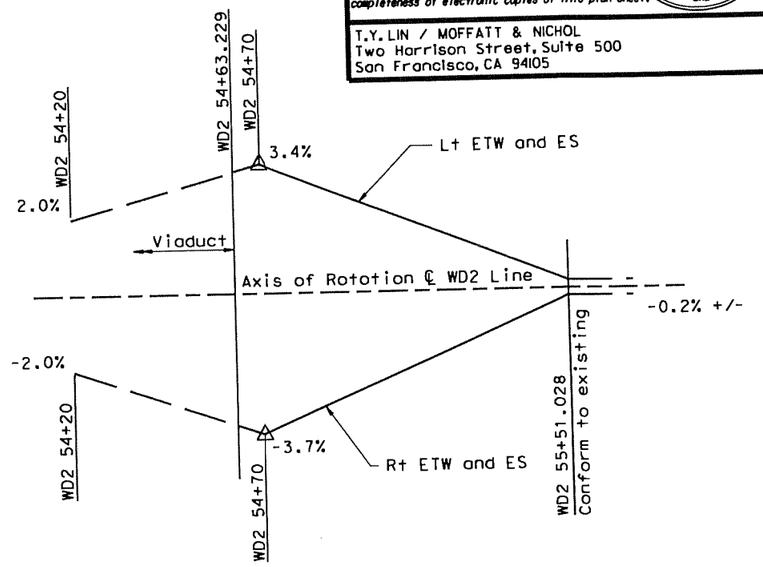

WD2 LINE SUPERELEVATION DIAGRAM

No Scale

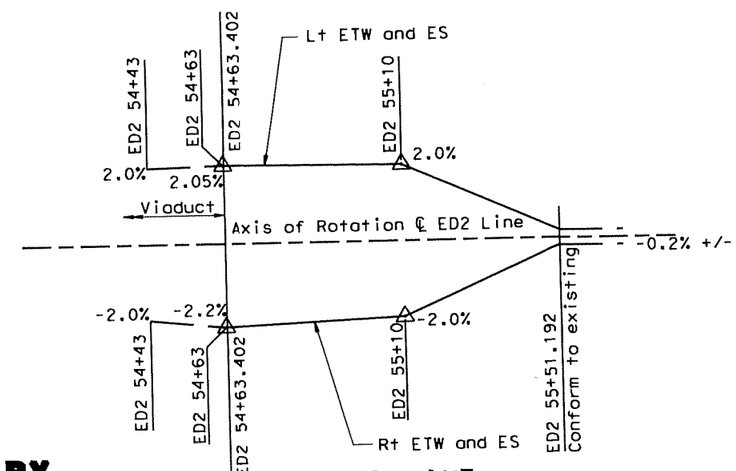

ED2 LINE SUPERELEVATION DIAGRAM

No Scale

PRELIMINARY
NOT FOR CONSTRUCTION

CONTRACT NO. 04-0120R4

CONTRACT CHANGE ORDER NO. 67

SHEET 4 OF 10

ALL DIMENSIONS ARE IN

Caltrans Metric

04	SF	80	12.6/13.2	

REGISTERED CIVIL ENGINEER

PLANS APPROVAL DATE

REGISTERED PROFESSIONAL ENGINEER — No. — Exp. — CIVIL — STATE OF CALIFORNIA

The State of California or its officers or agents shall not be responsible for the accuracy or completeness of electronic copies of this plan sheet.

T.Y. LIN / MOFFATT & NICHOL
Two Harrison Street, Suite 500
San Francisco, CA 94105

SAN FRANCISCO OAKLAND BAY BRIDGE
EAST SPAN SEISMIC SAFETY PROJECT

EAST TIE-IN
DECK CONTOURS

DESIGN	BY		CHECKED
DETAILS	BY		CHECKED
QUANTITIES	BY		CHECKED

DESIGN OVERSIGHT

SIGN OFF DATE

PREPARED FOR THE STATE OF CALIFORNIA DEPARTMENT OF TRANSPORTATION

PROJECT MANAGER

BRIDGE NO. 34-0006 (TEMP)

KILOMETER POST 12.6

CU EA 0120R4

DISREGARD PRINTS BEARING EARLIER REVISION DATES

REVISION DATES (PRELIMINARY STAGE ONLY)

SHEET T4 OF 136

DESIGN DETAIL SHEET (METRIC) (REV. 3/1/98)
@DATE@ @TIME@ Pen Table File

ORIGINAL SCALE IN MILLIMETERS FOR REDUCED PLANS 0 10 20 30 40 50 60 70 80 90 100

FILE => W:\MSAH\abdkc.dgn

DATE PLOTTED => 03/12/2007 TIME PLOTTED => 03:02:10 PM

USERNAME => dlee

04	SF	80	12.6/13.2		

REGISTERED CIVIL ENGINEER

PLANS APPROVAL DATE

The State of California or its officers or agents shall not be responsible for the accuracy or completeness of electronic copies of this plan sheet.

REGISTERED PROFESSIONAL ENGINEER — No. — Exp. — CIVIL — STATE OF CALIFORNIA

T.Y. LIN / MOFFATT & NICHOL
Two Harrison Street, Suite 500
San Francisco, CA 94105

CONTRACT NO. 04A-0120R4

CONTRACT CHANGE ORDER NO. 61

SHEET 5 OF 10

PRELIMINARY
NOT FOR CONSTRUCTION

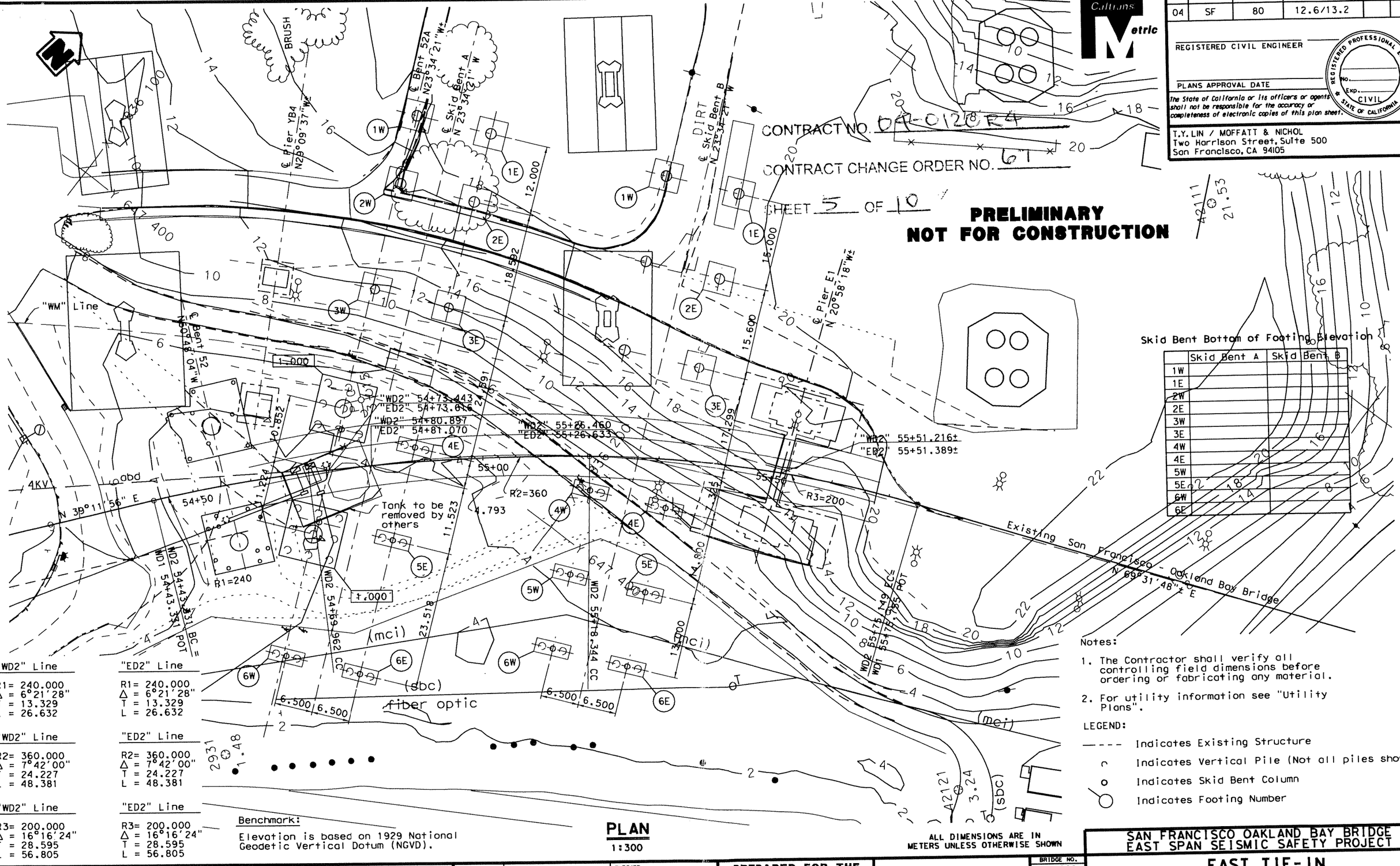

PLAN
1:300

Skid Bent Bottom of Footing Elevation

	Skid Bent A	Skid Bent B
1W		
1E		
2W		
2E		
3W		
3E		
4W		
4E		
5W		
5E		
6W		
6E		

"WD2" Line

R1= 240.000
Δ = 6°21'28"
T = 13.329
L = 26.632

"ED2" Line

R1= 240.000
Δ = 6°21'28"
T = 13.329
L = 26.632

"WD2" Line

R2= 360.000
Δ = 7°42'00"
T = 24.227
L = 48.381

"ED2" Line

R2= 360.000
Δ = 7°42'00"
T = 24.227
L = 48.381

"WD2" Line

R3= 200.000
Δ = 16°16'24"
T = 28.595
L = 56.805

"ED2" Line

R3= 200.000
Δ = 16°16'24"
T = 28.595
L = 56.805

Benchmark:

Elevation is based on 1929 National Geodetic Vertical Datum (NGVD).

ALL DIMENSIONS ARE IN METERS UNLESS OTHERWISE SHOWN

Notes:

1. The Contractor shall verify all controlling field dimensions before ordering or fabricating any material.
2. For utility information see "Utility Plans".

LEGEND:

- ---- Indicates Existing Structure
- ∩ Indicates Vertical Pile (Not all piles shown)
- o Indicates Skid Bent Column
- ◯ Indicates Footing Number

SAN FRANCISCO OAKLAND BAY BRIDGE
EAST SPAN SEISMIC SAFETY PROJECT

EAST TIE-IN
FOUNDATION PLAN

SCALE:	VERT.DATUM NAVD88	HORZ.DATUM	
PHOTOGRAMMETRY AS OF:		ALIGNMENT TIES	
SURVEYED	BY	DRAFTED	BY
FIELD CHECKED	BY	CHECKED	BY

DESIGN	BY	CHECKED
DETAILS	BY	CHECKED
QUANTITIES	BY	CHECKED

PREPARED FOR THE STATE OF CALIFORNIA
DEPARTMENT OF TRANSPORTATION

PROJECT MANAGER

DESIGN OVERSIGHT

SIGN OFF DATE

CU 04A
EA 0120R4

BRIDGE NO. 34-0006 (TEMP)
KILOMETER POST 12.6

DISREGARD PRINTS BEARING EARLIER REVISION DATES

REVISION DATES (PRELIMINARY STAGE ONLY)

SHEET T5 OF 111

FOUNDATION PLAN SHEET (METRIC) (REV. 3/1/99)
@DATE@ @TIME@ Pen Table File

ORIGINAL SCALE IN MILLIMETERS FOR REDUCED PLANS 0 10 20 30 40 50 60 70 80 90 100

GEOTECHNICAL PROFESSIONAL APPROVAL DATE

FILE => \XT\ET1\BB_South South Detour\Caltrans\03-09-2007\xcfnd.dgn
TIME PLOTTED => 08:45:18 AM
DATE PLOTTED => 03/12/2007
USERNAME => olee

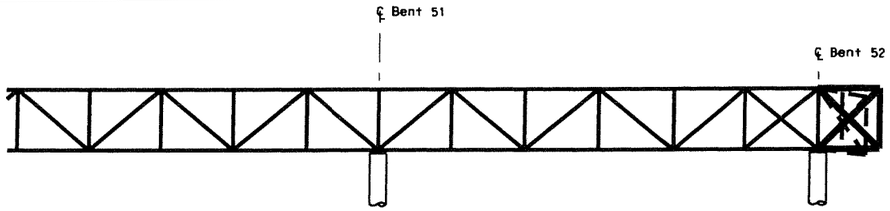

MEYER'S VIADUCT - NORTH TRUSS

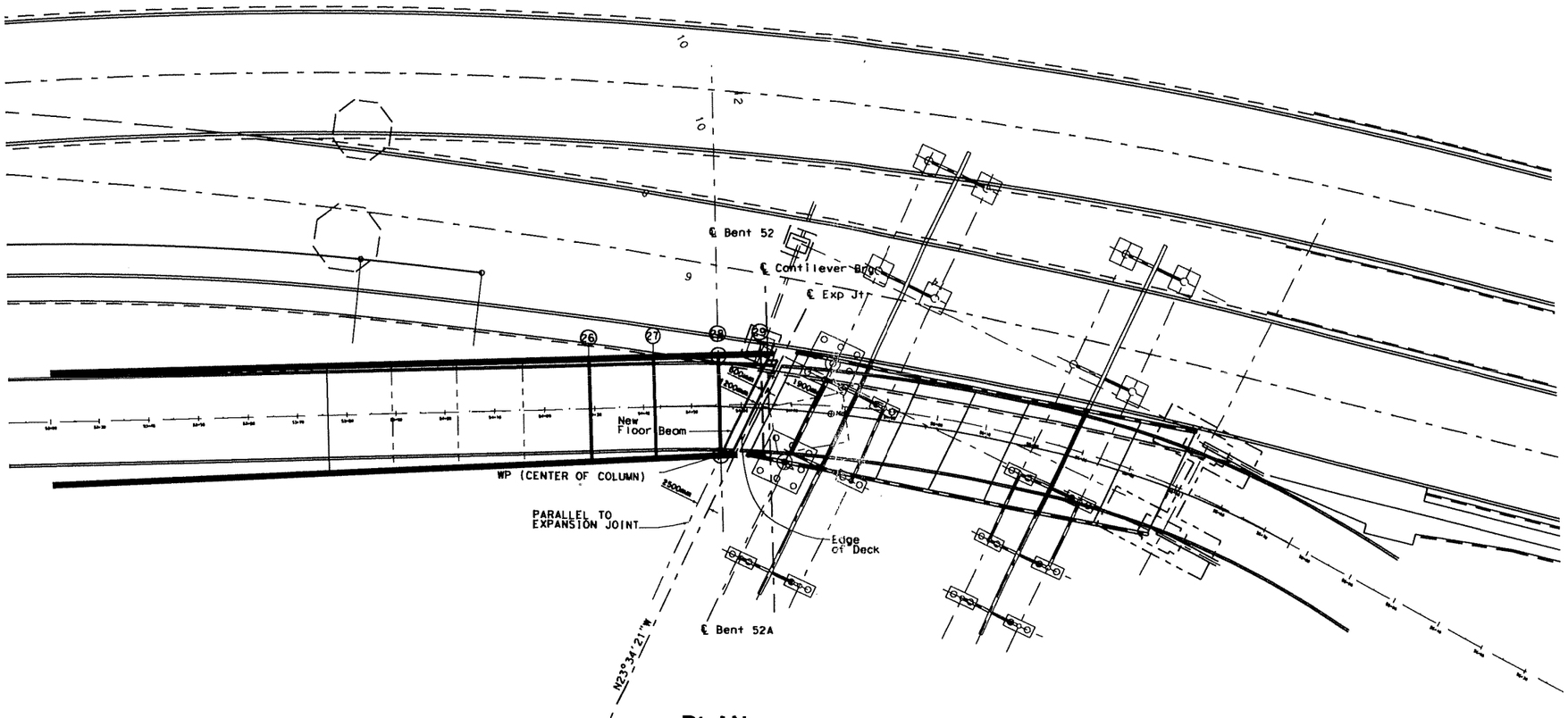

PLAN
1:600

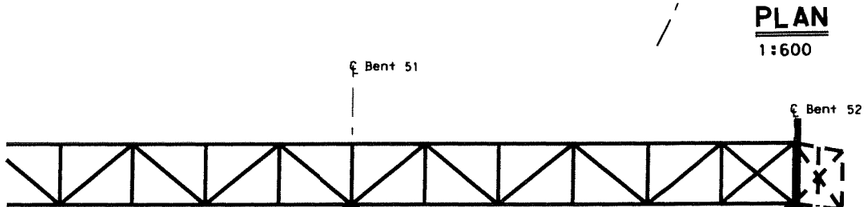

MEYER'S VIADUCT - SOUTH TRUSS

04	SF	80	12.6/13.2		

REGISTERED CIVIL ENGINEER

PLANS APPROVAL DATE

REGISTERED PROFESSIONAL ENGINEER — No. Exp. CIVIL — STATE OF CALIFORNIA

The State of California or its officers or agents shall not be responsible for the accuracy or completeness of electronic copies of this plan sheet.

T.Y. LIN / MOFFATT & NICHOL
Two Harrison Street, Suite 500
San Francisco, CA 94105

CONTRACT NO. 04-0120R4

CONTRACT CHANGE ORDER NO. 67

SHEET 6 OF 10

ALL DIMENSIONS ARE IN METERS UNLESS OTHERWISE SHOWN

SAN FRANCISCO OAKLAND BAY BRIDGE
EAST SPAN SEISMIC SAFETY PROJECT

EAST TIE-IN

BRIDGE NO. 34-0006 (TEMP)
KILOMETER POST 12.6

PREPARED FOR THE STATE OF CALIFORNIA DEPARTMENT OF TRANSPORTATION

PROJECT MANAGER

CU 0120R4 EA

DESIGN OVERSIGHT

SIGN OFF DATE

SCALE: | VERT.DATUM NAVD88 | HORZ.DATUM
PHOTOGRAMMETRY AS OF: | ALIGNMENT TIES
SURVEYED BY | DRAFTED BY
FIELD CHECKED BY | CHECKED BY

DESIGN BY CHECKED
DETAILS BY CHECKED
QUANTITIES BY CHECKED

ORIGINAL SCALE IN MILLIMETERS FOR REDUCED PLANS 0 10 20 30 40 50 60 70 80 90 100

DISREGARD PRINTS BEARING EARLIER REVISION DATES

REVISION DATES (PRELIMINARY STAGE ONLY)

SHEET 111 OF

FOUNDATION PLAN SHEET (METRIC) (REV. 3/1/99)
@DATE@ @TIME@ Pen Table File

GEOTECHNICAL PROFESSIONAL APPROVAL DATE

USERNAME => olee
DATE PLOTTED => 03/12/2007
TIME PLOTTED => 10:12:41 AM
FILE => W:\WSA\Plan-1_New-110.dgn

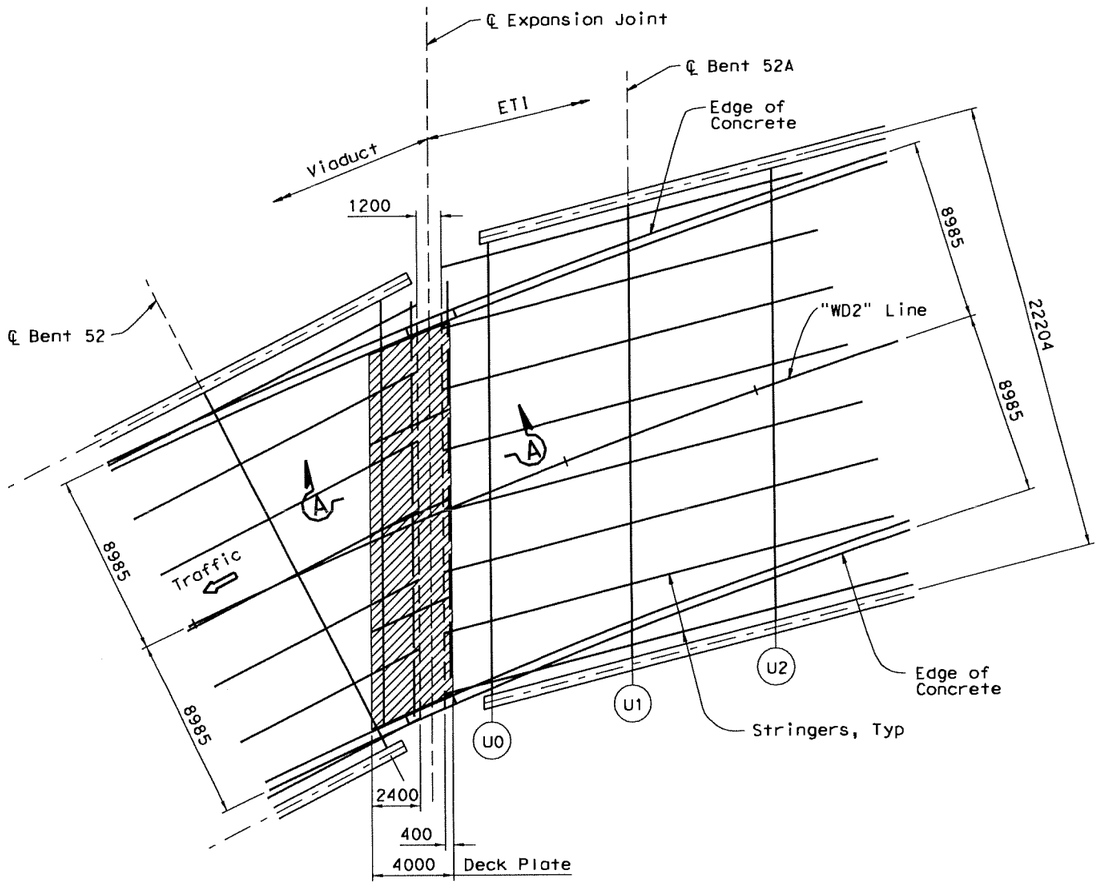

PLAN EXPANSION JOINT UPPER DECK

1:150

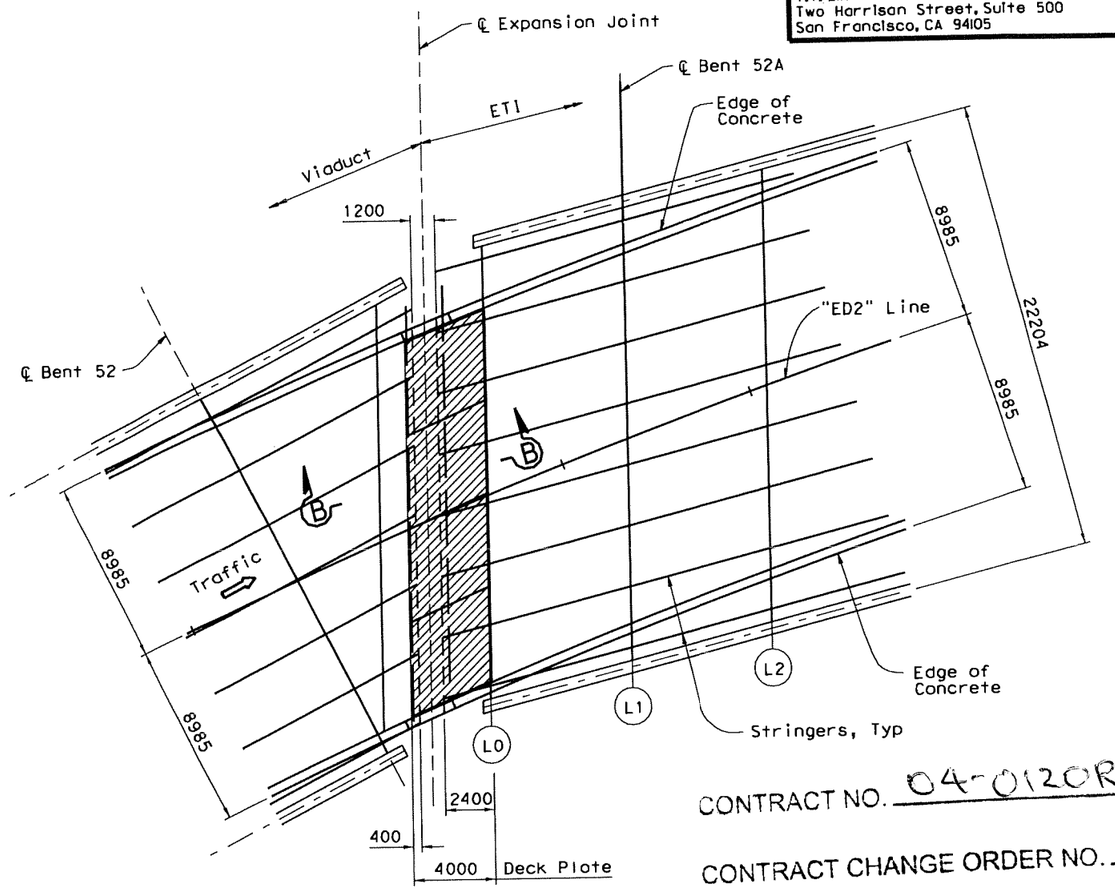

PLAN EXPANSION JOINT LOWER DECK

1:150

PRELIMINARY CONCEPT NOT FOR CONSTRUCTION

Notes:

1. For Section A-A and B-B, see "Bent 52A Expansion Joint Details No. 1" and "Bent 52A Expansion Joint Details No. 2" sheets.

04	SF	80	12.6/13.2		

REGISTERED CIVIL ENGINEER

PLANS APPROVAL DATE

REGISTERED PROFESSIONAL ENGINEER — No. — Exp. — CIVIL — STATE OF CALIFORNIA

The State of California or its officers or agents shall not be responsible for the accuracy or completeness of electronic copies of this plan sheet.

T.Y. LIN / MOFFATT & NICHOL
Two Harrison Street, Suite 500
San Francisco, CA 94105

CONTRACT NO. 04-0120R4

CONTRACT CHANGE ORDER NO. 67

SHEET 7 OF 10 *

ALL DIMENSIONS ARE IN MILLIMETERS UNLESS OTHERWISE SHOWN

SAN FRANCISCO OAKLAND BAY BRIDGE
EAST SPAN SEISMIC SAFETY PROJECT

EAST TIE-IN

BENT 52A EXPANSION JOINT LAYOUT

DESIGN OVERSIGHT — SIGN OFF DATE

DESIGN BY CHECKED
DETAILS BY CHECKED
QUANTITIES BY CHECKED

PREPARED FOR THE STATE OF CALIFORNIA DEPARTMENT OF TRANSPORTATION

PROJECT MANAGER

BRIDGE NO. 34-0006 (TEMP)
KILOMETER POST 12.6

CU
EA 0120R4

DISREGARD PRINTS BEARING EARLIER REVISION DATES

REVISION DATES (PRELIMINARY STAGE ONLY)

SHEET T44 OF 136

DESIGN DETAIL SHEET (METRIC) (REV. 3/1/98)
@DATE@ @TIME@ Pen Table File

ORIGINAL SCALE IN MILLIMETERS FOR REDUCED PLANS 0 10 20 30 40 50 60 70 80 90 100

FILE => X:\ETI\BB_South South Detour\Caltrans\03-09-2007\okint01.dgn

USERNAME => olee
DATE PLOTTED => 03/12/2007
TIME PLOTTED => 08:45:58 AM
FILE => X:\ETI\BB_South South Detour\Caltrans\03-09-2007\okint01.dgn

04	SF	80	12.6/13.2		

REGISTERED CIVIL ENGINEER

PLANS APPROVAL DATE

REGISTERED PROFESSIONAL ENGINEER — No. — Exp. — CIVIL — STATE OF CALIFORNIA

The State of California or its officers or agents shall not be responsible for the accuracy or completeness of electronic copies of this plan sheet.

T.Y. LIN / MOFFATT & NICHOL
Two Harrison Street, Suite 500
San Francisco, CA 94105

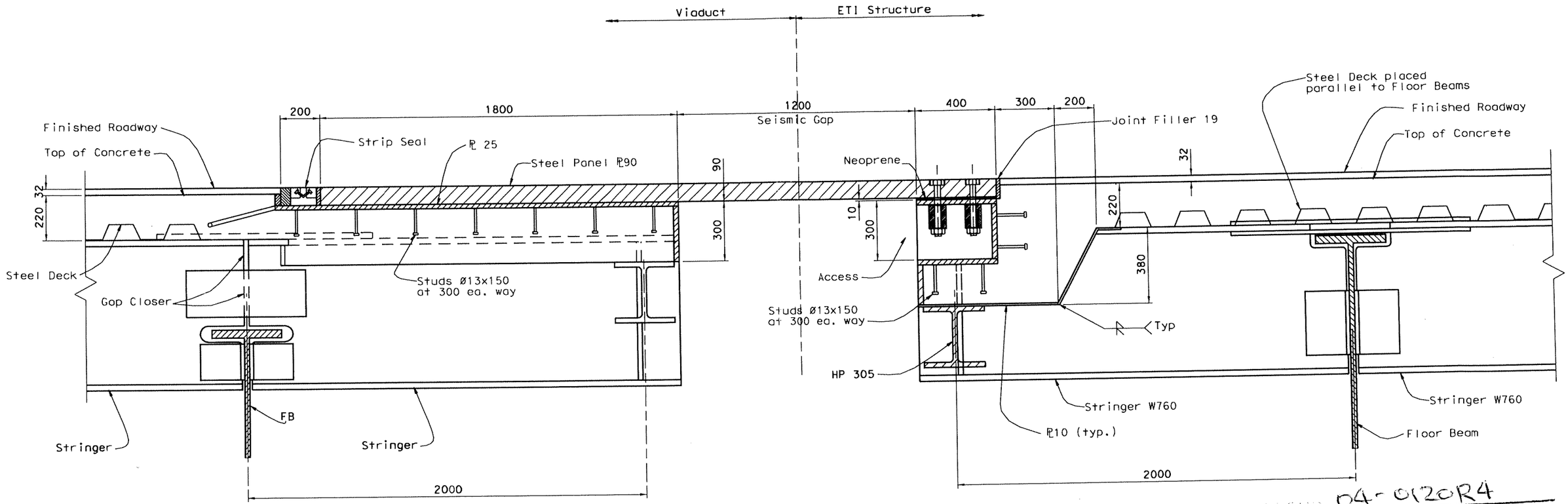

SECTION A-A

1:10

Section cut parallel to new stringer

CONTRACT NO. 04-0120R4

CONTRACT CHANGE ORDER NO. 67

SHEET 8 OF 10

PRELIMINARY CONCEPT NOT FOR CONSTRUCTION

ALL DIMENSIONS ARE IN MILLIMETERS UNLESS OTHERWISE SHOWN

SAN FRANCISCO OAKLAND BAY BRIDGE
EAST SPAN SEISMIC SAFETY PROJECT

EAST TIE-IN

BENT 52A EXPANSION JOINT DETAILS NO. 1

DESIGN OVERSIGHT

SIGN OFF DATE

	BY	CHECKED
DESIGN		
DETAILS		
QUANTITIES		

PREPARED FOR THE STATE OF CALIFORNIA DEPARTMENT OF TRANSPORTATION

PROJECT MANAGER

BRIDGE NO. 34-0006 (TEMP)

KILOMETER POST 12.6

CU EA 0120R4

DISREGARD PRINTS BEARING EARLIER REVISION DATES

REVISION DATES (PRELIMINARY STAGE ONLY)

SHEET T46 OF 136

DESIGN DETAIL SHEET (METRIC) (REV. 3/1/98)
@DATE@ @TIME@ Pen Table File

ORIGINAL SCALE IN MILLIMETERS FOR REDUCED PLANS 0 10 20 30 40 50 60 70 80 90 100

FILE => X:\ETI\BB_South South Detour\Caltrans\03-09-2007\oakint04.dgn

DATE PLOTTED => 03/12/2007 TIME PLOTTED => 08:46:36 AM
USERNAME => alee
FILE => X:\ETI\BB_South South Detour\Caltrans\03-09-2007\oakint04.dgn

04	SF	80	12.6/13.2		

REGISTERED CIVIL ENGINEER

PLANS APPROVAL DATE

The State of California or its officers or agents shall not be responsible for the accuracy or completeness of electronic copies of this plan sheet.

REGISTERED PROFESSIONAL ENGINEER — No. — Exp. — CIVIL — STATE OF CALIFORNIA

T.Y. LIN / MOFFATT & NICHOL
Two Harrison Street, Suite 500
San Francisco, CA 94105

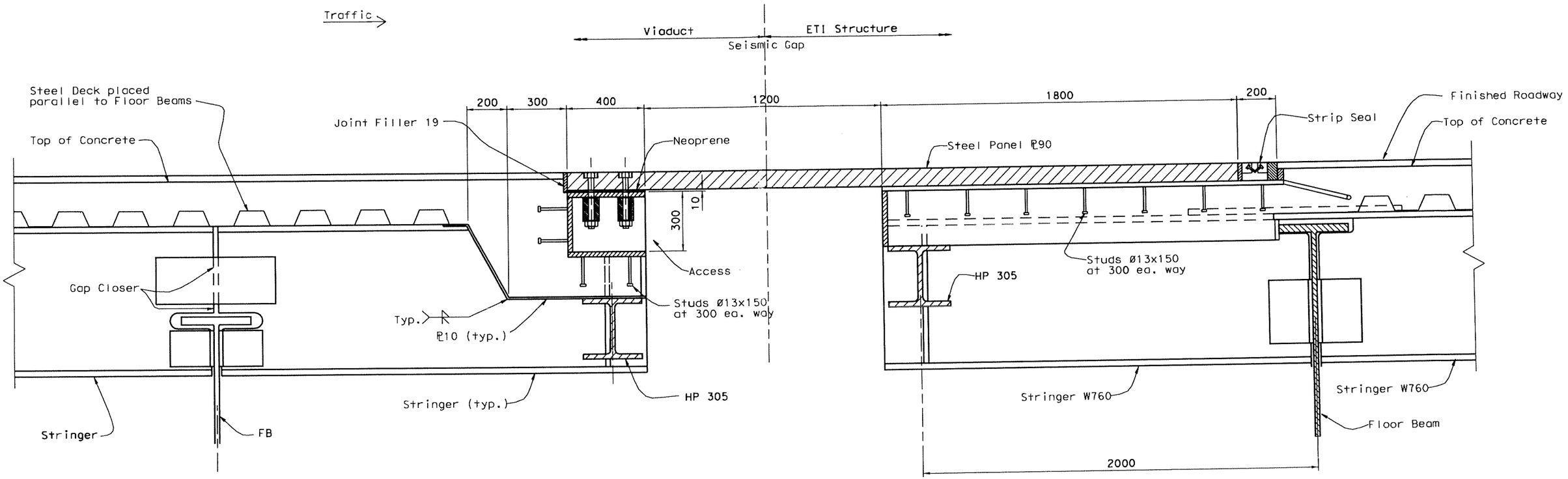

SECTION A-A CUT PARALLEL TO NEW STRINGER

1:10

CONTRACT NO. 64-0120R4

CONTRACT CHANGE ORDER NO. 61

SHEET 9 OF 10

PRELIMINARY CONCEPT NOT FOR CONSTRUCTION

ALL DIMENSIONS ARE IN MILLIMETERS UNLESS OTHERWISE SHOWN

DESIGN OVERSIGHT

SIGN OFF DATE

	BY	CHECKED
DESIGN		
DETAILS		
QUANTITIES		

PREPARED FOR THE STATE OF CALIFORNIA DEPARTMENT OF TRANSPORTATION

PROJECT MANAGER

BRIDGE NO. 34-0006 (TEMP)
KILOMETER POST 12.6

SAN FRANCISCO OAKLAND BAY BRIDGE EAST SPAN SEISMIC SAFETY PROJECT

EAST TIE-IN

BENT 52A EXPANSION JOINT DETAILS NO. 2

DESIGN DETAIL SHEET (METRIC) (REV. 3/1/98)
DATE *TIME* Pen Table File

ORIGINAL SCALE IN MILLIMETERS FOR REDUCED PLANS 0 10 20 30 40 50 60 70 80 90 100

CU EA 0120R4

DISREGARD PRINTS BEARING EARLIER REVISION DATES

REVISION DATES (PRELIMINARY STAGE ONLY)

SHEET T47 OF 136

FILE => X:\ETI\BB_South South Detour\Caltrans\03-09-2007\akint05.dgn

DATE PLOTTED => 03/12/2007 TIME PLOTTED => 08:47:08 AM

USERNAME => alee

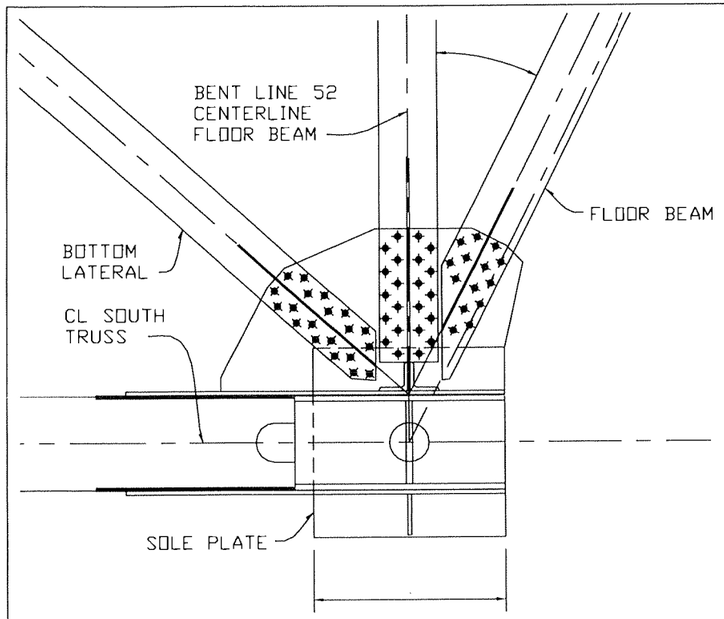

PLAN @ L28

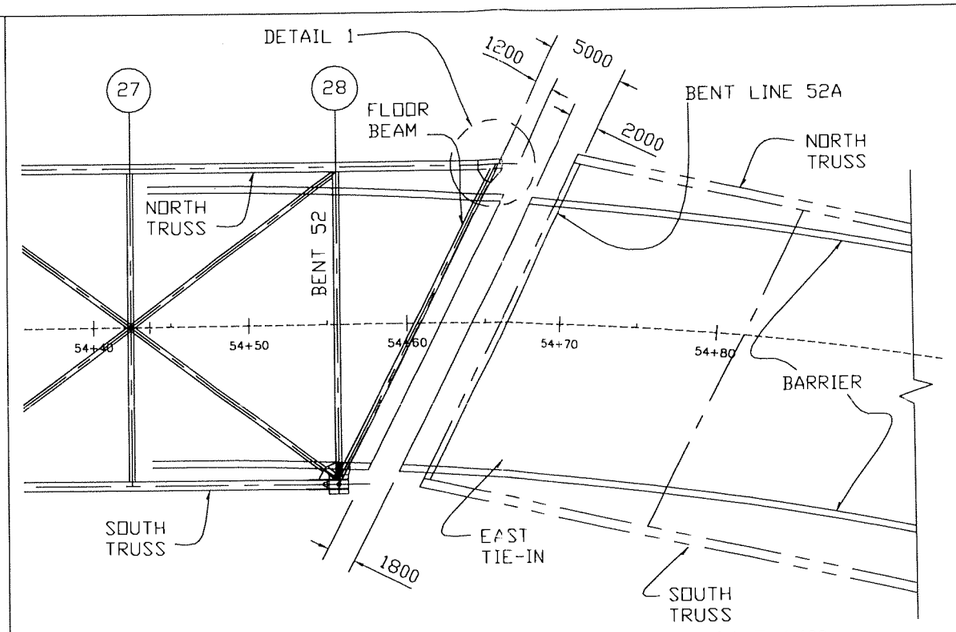

PLAN AT BENT 52

SCALE: 1:400

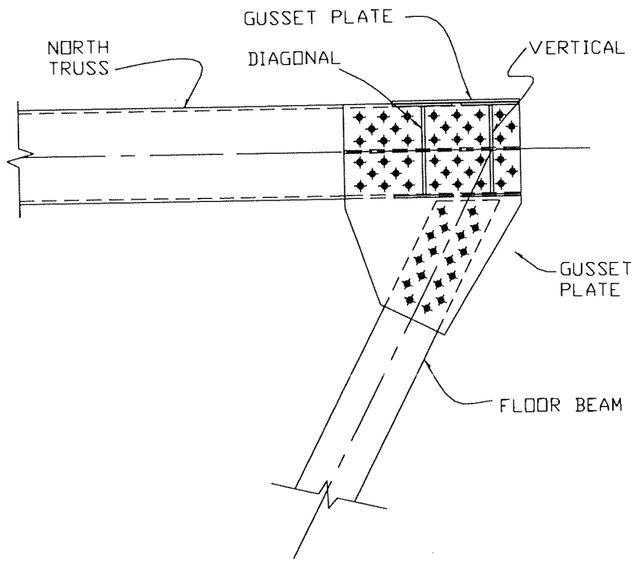

PLAN VIEW OF DETAIL 1

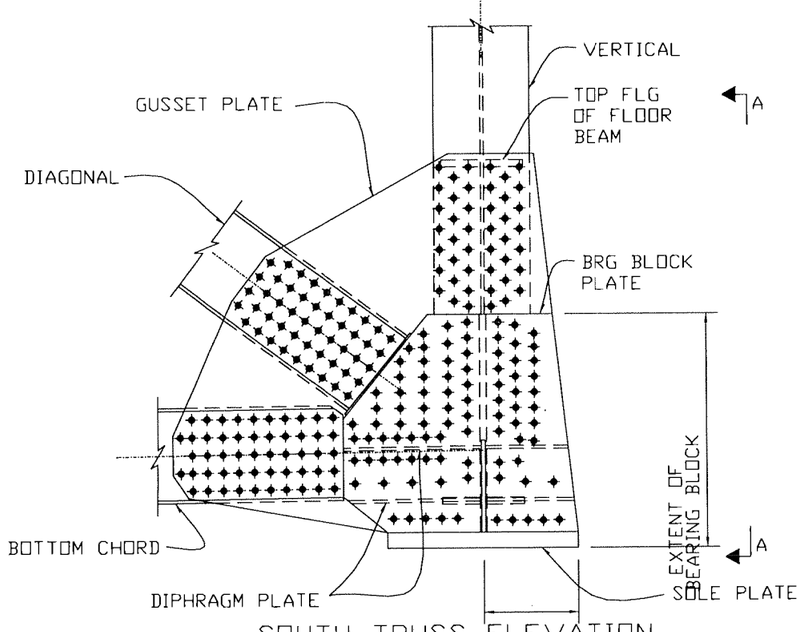

SOUTH TRUSS ELEVATION

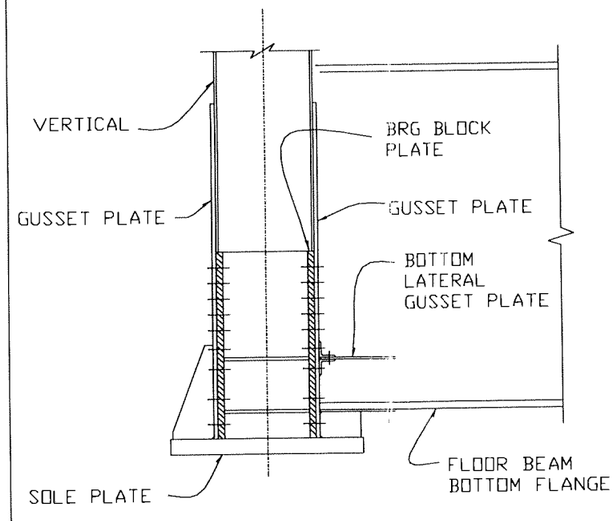

SECTION A-A

CONTRACT NO. 64-0120R4

CONTRACT CHANGE ORDER NO. 67

SHEET 10 OF 10

PRELIMINARY CONCEPT
CONTRACTOR TO DESIGN AND
DETAIL
NOT FOR CONSTRUCTION

SCALE: 1:40

SAN FRANCISCO OAKLAND BAY BRIDGE EAST SPAN SEISMIC SAFETY PROJECT
EAST TIE-IN
VIADUCT TIE-IN
REF.: IMBSEN SHEET 56 SK-008

STATE OF CALIFORNIA - DEPARTMENT OF TRANSPORTATION

CONTRACT CHANGE ORDER MEMORANDUM

RECEIVED
006788 DEC 14 5

TO: PETER SIEGENTHALER / DENNIS TURCHON	FILE: **E.A.** 04 - 0120R4
	CO-RTE-PM SF-80-12.6/13.2
FROM: MAHANTESH ANIGOL	**FED. NO.** ACBRIM-080-1(097)N
CCO#: **67** SUPPLEMENT#: **0** Category Code: **CHXX**	CONTINGENCY BALANCE (incl. this change) **$4,633,240.67**
COST: **$800,000.00** INCREASE ☑ DECREASE ☐	HEADQUARTERS APPROVAL REQUIRED? ☑ YES ☐ NO
SUPPLEMENTAL FUNDS PROVIDED: **$0.00**	IS THIS REQUEST IN ACCORDANCE WITH ENVIRONMENTAL DOCUMENTS? ☑ YES ☐ NO
CCO DESCRIPTION: Viaduct / ETI Interface Modifications	**PROJECT DESCRIPTION:** CONSTRUCT ROUTE 80 TEMP BYPASS STRUCTURE

Original Contract Time:	Time Adj. This Change:	Previously Approved CCO Time Adjustments:	Percentage Time Adjusted: (including this change)	Total # of Unreconciled Deferred Time CCO(s): (including this change)
475 Day(s)	**0** Day(s)	**381** Day(s)	**80** %	**7**

THIS CHANGE ORDER PROVIDES FOR:

Modifying the South-South Detour (SSD) Viaduct superstructure design to accommodate the East Tie-In Roll Out/Roll In design concept as per sheets 3 through 10 of this change. The two easterly most panels of the Viaduct span 51 shall be redesigned and re-detailed. The eastern leading edge of the Viaduct needs to be modified to match the bearing and offset provided. The upper and lower deck contours should remain unchanged.

Under the scope of the original SSD Contract the Contractor was to design and construct three defined sections of the Temporary Bypass Structure (TBS), the West Tie-In, the Viaduct, and the East Tie-In. As per the approved SSD strategy memorandum, "San Francisco-Oakland Bay Bridge Corridor Schedule Mitigation – Strategy for South-South Detour Contract Completion", dated December 14, 2006, the Department assumed responsibility for the design of the West Tie-In and East Tie-In. The modifications to the Contractor's design for the TBS Viaduct are necessary to accommodate the Department's East Tie-In Roll Out/Roll In design concept. The plan sheets of this change order will not be stamped and will be used only to assist the Contractor's Engineer in design and development of the final Viaduct design and drawings, of which these will be stamped by the Contractor's Engineer. This work which was not originally contemplated by the contract is being performed in accordance with Section 5-1.14 "Contractor Design" of the Special Provisions and the above referenced strategy memorandum.

Compensation to the Contractor for the additional design work to modify the TBS Viaduct structure to accommodate the Departments East Tie-In design concept will be compensated for as extra work at force account. Compensation to the Contractor for the additional work to fabricate and construct these modifications will compensated for under separate change order.

TBPOC provided authorization to proceed with this change order per their meeting on May 31, 2006.

This change was requested by Tom Ostrom - Office Chief, Structures Design. This change was discussed and concurred by Ken Terpstra - Project Manager, and Ken Brown - Office Chief, Structures Maintenance, and Pete Siegenthaler - SFOBB Construction Manager, and Hong Wong - Project Engineer.

This work is not covered under the contract items. Therefore, this work will be done under Extra Work at Force Account for an estimated total of $ 800,000.00, which can be financed under the current contingency fund.

No adjustment of the contract time is warranted, as this change does not affect the controlling operation.

Approval of this change order is recommended by the Resident Engineer.

ADA Notice: For individuals with sensory disabilities, this document is available in alternate formats. For information call: (916) 654-6410 or TDD (916) 654-3880 or write Records and Forms Management, 1120 N Street, MS-89, Sacramento, CA 95814.

CONCURRED BY:			
Construction Engineer:	Mahantesh Anigol	Date	7/10/07
Bridge Engineer:	Tom Ostrom, OSD	Date	7/3/07
Project Engineer:	Hong Wong	Date	7/6/07
Project Manager:	Ken Terpstra	Date	5/7/07
FHWA Rep.:		Date	
Environmental:		Date	
Other (specify):	Bill Zanetich, Maintenance	Date	7/11/07
Other (specify):		Date	
District Prior Approval By:		Date	
HQ (Issue Approve) By:	Ken Darby, HQ CCO Reviewer	Date	7/12/07
Resident Engineer's Signature:	M. U. Anigol	Date	7/10/07

ESTIMATE OF COST

	THIS REQUEST	TOTAL TO DATE
ITEMS	$0.00	$0.00
FORCE ACCOUNT	$800,000.00	$800,000.00
AGREED PRICE	$0.00	$0.00
ADJUSTMENT	$0.00	$0.00
TOTAL	$800,000.00	$800,000.00

FEDERAL PARTICIPATION

☐ PARTICIPATING ☐ PARTICIPATING IN PART ☑ NONE
☐ NON-PARTICIPATING (MAINTENANCE) ☐ NON-PARTICIPATING

FEDERAL SEGREGATION (if more than one Funding Source or P.I.P. type)
☑ CCO FUNDED PER CONTRACT ☐ CCO FUNDED AS FOLLOWS

FEDERAL FUNDING SOURCE	PERCENT

ADA Notice: For individuals with sensory disabilities, this document is available in alternate formats. For information call: (916) 654-6410 or TDD (916) 654-3880 or write Records and Forms Management, 1120 N Street, MS-89, Sacramento, CA 95814.

STATE OF CALIFORNIA - DEPARTMENT OF TRANSPORTATION

CONTRACT CHANGE ORDER

Change Requested by: Engineer

CCO 68	Suppl. No. 0	Contract No. 04 - 0120R4	Road SF-80-12.6/13.2	FED. AID LOC.: ACBRIM-080-1(097)N

To: **CC MYERS INC**

You are directed to make the following changes from the plans and specifications or do the following described work not included in the plans and specifications for this contract. ***NOTE: This change order is not effective until approved by the Engineer.***

Description of work to be done, estimate of quantities and prices to be paid. (Segregate between additional work at contract price, agreed price and force account.) Unless otherwise stated, rates for rental of equipment cover only such time as equipment is actually used and no allowance will be made for idle time. This last percentage shown is the net accumulated increase or decrease from the original quantity in the Engineer's Estimate.

Extra Work at Force Account:

As authorized by the Engineer:

Provide, install, relocate, remove electrical circuits and equipment for Stage 1 electrical work at the new Viaduct / West Tie-In interface as per the attached Plans and Special Provisions.

For this work, payment will be in accordance with Section 4-1.03D, Extra Work, of the Standard Specifications, and Section 5-1.24, Force Account Payment, of the Special Provisions, and no other compensation will be allowed therefor.

No adjustment in contract time will be made since this work is not a controlling operation.

Estimated cost of Extra Work at Force Account $140,000.00

Estimated Cost: Increase ☑ Decrease ☐ **$140,000.00**

By reason of this order the time of completion will be adjusted as follows: 0 days

Submitted by		
Signature M. U. Anigol	**Resident Engineer** MAHANTESH ANIGOL	**Date** 3/22/07
Approval Recommended by		
Signature	**Area Construction Manager** JASON TOM	**Date** 4/4/07
Engineer Approval by		
Signature for Jason Tom	**Area Construction Manager** JASON TOM	**Date** 7/9/07

We the undersigned contractor, have given careful consideration to the change proposed and agree, if this proposal is approved, that we will provide all equipment, furnish the materials, except as may otherwise be noted above, and perform all services necessary for the work above specified, and will accept as full payment therefor the prices shown above.

NOTE: If you, the contractor, do not sign acceptance of this order, your attention is directed to the requirements of the specifications as to proceeding with the ordered work and filing a written protest within the time therein specified.

Contractor Acceptance by		
Signature	**(Print name and title)** DANIEL E. HUMICK, PRESIDENT	**Date** 7/05/07

CONTRACT NO: 04-0120R4

04-SF-80-KP12.6/13.2

DISTRICT CCO SPEICAL PROVISIONS

FOR CONTRACT CHANGE ORDER NO: 68

DATE 2-7-2007

CONTRACT NO. 04-0120R4

CONTRACT CHANGE ORDER NO. 68

SHEET 2 OF 42

CONTRACT NO. 04-0120R4

The special provisions contained herein have been prepared by or under the direction of the following Registered Persons.

ELECTRICAL

REGISTERED ELECTRICAL ENGINEER

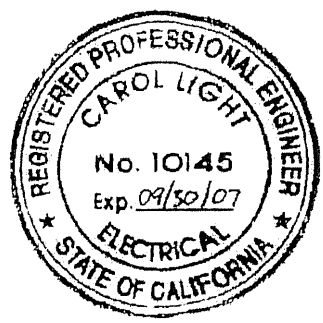

CIVIL

2/7/07

Registered CIVIL Engineer

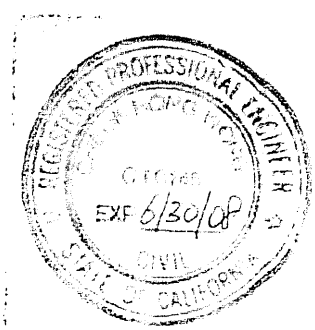

CONTRACT NO. 04-0120R4

CONTRACT CHANGE ORDER NO. 68

SHEET 3 OF 42

SECTION 1. SPECIFICATIONS AND PLANS

Section 1, " Specifications and Plans,' of the Special Provisions is amended by adding the following sections:

The work embraced herein shall conform to the provisions in the Standard Specifications dated July 1999, and the Standard Plans dated July 1999, of the Department of Transportation insofar as the same may apply, the special provisions and these CCO special provisions.

In case of conflict between the Standard Specifications, the Special Provisions and these CCO special Provisions, the CCO Special Provisions shall take precedence over and shall be used in lieu of the conflicting portions.

SECTION 10. CONSTRUCTION DETAILS

SECTION 10-1. GENERAL

10-1.01 EXISTING HIGHWAY FACILITIES

The work performed in connection with various existing highway facilities shall conform to the provisions in Section 15, "Existing Highway Facilities," of the Standard Specifications and these Special Provisions.

REMOVE DRAINAGE FACILITY

Existing pipes, Utility Vaults, and drainage inlets where shown on the plans to be removed, shall be completely removed and disposed of. Resulting openings into existing structures that are to remain in place shall be plugged with commercial quality concrete. Drainage facilities shall not be removed until their use is no longer required.

Full compensation for concrete plugs, pipe removal, structure excavation, and backfill shall be considered as included in the contract lump sum price paid for drainage facilities and no additional compensation will be allowed therefor.

Existing pipes, and inlets removed shall be disposed of outside of the highway right of way in conformance with the provisions in Section 7-1.13, "Disposal of Material Outside the Highway Right of Way," of the Standard Specifications.

REMOVE GUTTER

Concrete gutter, where shown on the plans to be removed, shall be completely removed and disposed of. The pay quantities of concrete gutter to be removed will be measured by the cubic meter, measured before and during removal operations.

Concrete removed shall be disposed of outside the highway right of way in conformance with the provisions in Section 7-1.13, "Disposal of Material Outside the Highway Right of Way," of the Standard Specifications.

Where no joint exists between concrete gutter to be removed and the concrete gutter to remain in place, the concrete gutter shall be cut on a neat line to a minimum depth of 50 mm. Where concrete gutter has been removed, the backfilled areas shall be graded to blend in with the surrounding terrain.

ASPHALT CONCRETE PAVEMENT AND BASE

Whenever existing asphalt concrete pavement and its underlying aggregate base is removed due to the work involved the contractor shall replace the asphalt concrete and aggregate base to match the existing condition.

Prior to removing the asphalt concrete, the outside edge of the asphalt concrete to remain in place shall be cut on a neat line to a minimum depth of 50 mm. The asphalt concrete shall be removed in such a manner that the surfacing which is to remain in place is not damaged. Asphalt concrete shall be Type A and shall conform to the provisions in Section 39, "Asphalt Concrete," of the Standard Specifications. Aggregate base shall be Class 3 and conform to the provisions in Section 26, "Aggregate Bases," of the Standard Specifications.

The asphalt concrete and aggregate base removed shall be disposed of outside of the highway right of way in conformance with the provisions in Section 7-1.13, "Disposal of Material Outside the Highway Right of Way," of the Standard Specifications.

10-1.02 ALTERNATIVE UTILITY VAULTS

Alternative Utility Vaults shall conform to the provisions in Section 62, "Alternative Utility Vaults," of the Standard Specifications.

10-1.03 DRAINAGE INLETS

Drainage inlets shall conform to the provisions in Section 75, "Miscellaneous Metal," and Section 51, "Concrete Structures," of the Standard Specifications.

10-1.04 MISCELLANEOUS CONSTRUCTION

Gutters, concrete aprons, and gutter depressions shall conform to the provisions in Section 73, "Concrete Curbs and Sidewalks," of the Standard Specifications.

10-1.05 WELDED STEEL PIPE

Welded steel pipe shall conform to the provisions in Section 70, "Miscellaneous Facilities," of the Standard Specifications.

10-1.06 ABANDON UTILITY VAULTS

Existing Utility Vaults, where shown on the plans to be abandoned, shall be abandoned in place. Resulting openings into existing structures that are to remain in place shall be plugged with commercial quality concrete containing not less than 505 pounds of cement per cubic yard.
Abandoning Utility Vault in place shall conform to the following:

A. Utility Vaults that intersect the side slopes shall be removed to a depth of not less than 1 meter measured normal to the plane of the finished side slope, before being abandoned.

B. Utility Vaults 0.3 meter in diameter and larger, shall, at the Contractor's option, be backfilled with either sand, controlled low strength material or slurry cement backfill conforming to the provisions in Section 19-3.062, "Slurry Cement Backfill," of the Standard Specifications by any method acceptable to the Engineer that completely fills the pipe. Sand backfill material shall be clean, free draining, and free from roots and other deleterious substances.

C. The ends of Utility Vaults shall be securely closed by a 0.15 meter thick tight fitting plug or wall of commercial quality concrete.

Utility Vaults shall not be abandoned until their use is no longer required. The Contractor shall notify the Engineer in advance 5 days of any intended Utility Vaults or pipeline abandonment.

Full compensation for concrete plugs, and backfill shall be considered as included in the contract unit price paid for abandon utility vaults and no additional compensation will be allowed therefor.

SECTION 86: SIGNALS, LIGHTING AND ELECTRICAL SYSTEMS

The seventh paragraph of Section 86-2.03, "Foundations," of the Standard Specifications is amended to read:

• Forms shall be true to line and grade. Tops of foundations for posts and standards, except special foundations, shall be finished to curb or sidewalk grade or as directed by the Engineer. Forms shall be rigid and securely braced in place. Conduit ends and anchor bolts shall be placed in proper position and to proper height, and anchor bolts shall be held in place by means of rigid templates. Anchor bolts shall not be installed more than 1:40 from vertical.

The twelfth paragraph of Section 86-2.03, "Foundations," of the Standard Specifications is amended to read:

• Plumbing of the standards shall be accomplished by adjusting the leveling nuts before placing the mortar or before the foundation is finished to final grade. Shims, or other similar devices shall not be used for plumbing or raking of posts, standards or pedestals. After final adjustments of both top nuts and leveling nuts on anchorage assemblies have been made, firm contact shall exist between all bearing surfaces of the anchor bolt nuts, washers, and the base plate.

Section 86-8.01, "Payment," of the Standard Specifications is amended to read by adding the following paragraph after the first paragraph:

• If a portion or all of the traffic signal and lighting standards, pursuant to Standard Specification Section 86, "Signals, Lighting and Electrical Systems," are fabricated more than 480 air line kilometers from both-Sacramento and Los Angeles, additional shop inspection expenses will be sustained by the State. Whereas it is and will be impracticable and extremely difficult to ascertain and determine the actual increase in such expenses, it is agreed that payment to the Contractor for furnishing such items from each fabrication site located more than 480 air line kilometers from both Sacramento and Los Angeles will be reduced $5000; in addition, in the case where a fabrication site is located more than 4800 air line kilometers from both Sacramento and Los Angeles, payment will be reduced an additional $3000 per each fabrication site ($8000 total per site).

SECTION 10-3. ELECTRICAL WORK

10-3.01 DESCRIPTION

Traffic signals, flashing beacons, lighting, sign illumination, traffic operation system and call box system shall conform to the provisions in Section 86, "Signals, Lighting and Electrical Systems," of the Standard Specifications and these special provisions:

Call Box system shall consist of installing foundations, conduits, conductors and cables. Callbox housings and mounting bases shall be installed by Electrical Contractor.

ELECTRICAL WORK (Stage 1)

This work shall include demolition on the north side of the viaduct in preparation for installation of new viaduct foundation piles:

1. Remove and relocate existing call boxes.
2. Remove two existing light poles on north side of viaduct at onramp.
3. Relocate two existing light poles on the north side of viaduct.
4. Relocate junction box for CCTV and CCTV camera.
5. Relocate existing junction boxes on south side of viaduct at off ramp.
6. Install new flexible conduit as necessary for relocations.

7. Contractor shall determine exact conduit routing and location of conduit supports and splice boxes.
8. Before completion of all electrical work, contractor shall label all conductors and cables by type and circuit number.
9. Conduct cable continuity and insulation tests on all circuits.
10. Conduct cable continuity test and functional test on all lighting circuits to remain in use.

ELECTRICAL WORK (Stage 2)
Demolition of south side of existing viaduct and relocation of adjacent site electrical items to prepare for new viaduct installation:

1. Extend existing conduit and conductors to new pullboxes.
2. Provide new armored cable.
3. Remove existing callbox and retain for use in stage four.
4. Contractor shall determine exact conduit routing and location of conduit supports and splice boxes.

ELECTRICAL WORK (Stage 3)
Construction of new viaduct structure:

1. Install recessed soffit lighting in underside of upper viaduct level. Provide pullboxes conduit and wire for electrical connection.
2. Install temporary light poles on permanent bases on north end of viaduct with conduit routed in permanent barrier.
3. Install call boxes on viaduct.
4. Conduct cable continuity and insulation tests on all circuits.

ELECTRICAL WORK (Stage 4)
Installation of viaduct into permanent position with connection of permanent and temporary lighting poles to circuits. Connection of call boxes to call box system:

1. Install temporary poles mounted on K-rail or movable bases.
2. Connect both permanent and temporary lighting to lighting circuitry.
3. Connect call boxes to call box system.
4. Connect lighting circuits to existing bridge to the east of bent 48 and to the west of bent 38.
5. Contractor shall determine exact conduit routing and location of conduit supports and splice boxes.
6. Before completion of all electrical work, contractor shall label all conductors and cables by type and circuit number.
7. Conduct cable continuity and insulation tests on all circuits.
8. Conduct cable continuity test and functional test on all lighting circuits to remain in use.

10-3.02 COST BREAK-DOWN

Cost break-downs shall conform to the provisions in Section 86-1.03, "Cost Break-Down," of the Standard Specifications and these special provisions.
The Engineer shall be furnished a cost break-down for each contract lump sum item of work described in this Section 10-3.
The cost break-down shall be submitted to the Engineer for approval within 20 days after the contract has been approved. The cost break-down shall be approved, in writing, by the Engineer before any partial payment for the items of electrical work will be made.
The cost break-down for the Electrical Work shall be broken down, as a minimum, to include the following listed items in addition to those listed in the Standard Specifications:

Electrical Work. Electrical installation is shown on the plans and shall include, but not be limited to the following additional items of the cost break-down:

STAGES 1-4

1. Remove existing and install new pullboxes.
2. Relocate existing light poles.
3. Relocate existing call boxes and cable to them.
4. Install new conduit and wires.

CONTRACT NO. 04-0120R4

CONTRACT CHANGE ORDER NO. 68

SHEET 9 OF 42

10-3.03 CODES AND STANDARDS

All work performed and material installed or furnished on this contract shall conform to Section 86-1.02 "Regulations and Code," and the following codes and standard to the modifications and additional requirements in these special provisions:

A. California administrative Code, Title 24, part 3, "Basic Electrical Regulations."
B. National Fire Protection Association Standards.
C. All local ordinances.

10-3.04 MAINTAINING EXISTING AND TEMPORARY ELECTRICAL SYSTEMS

The Contractor shall visit the site of the proposed routing of cables and base his bids from site examination and estimate. The Contractor shall study the contract documents included under this contract to determine exactly the extent of work provided under this contract, as well as to ascertain the difficulty to be encountered in the performing the work. Continuous operation of the bridge shall be required while rerouting and splicing of the existing circuits are being performed. Outages required for construction purposes shall be scheduled for the shortest practical periods of time, in coordination with the Engineer. No outages or shutdowns of service shall occur without the written authorization of the Engineer.

Before commencing the work, the Contractor shall submit in writing to the Engineer a description and detailed schedule of the intended operations relative to keeping the bridge east and west spans lighting systems in continuous operation. Such schedule shall be part of the progress schedule.

Regardless of construction procedure, methods and equipment selected, the Contractor shall have all materials and equipment on the site for the installation of the lighting system prior to commencement of work. Disconnection of existing or temporary lighting system will not be permitted until the new cables have been tested and properly installed.

The Contractor shall provide any and all necessary temporary materials as required to keep any and all electrical facilities in continuous operation. The Contractor shall be responsible for coordinating all electrical work with all other Contractors, State forces, and entities. Where damage to facilities is caused by the Contractor's operations, the Contractor shall, at the Contractor's expense, repair or replace damaged facilities promptly in accordance with the Standard Specifications. If the Contractor fails to complete the repairs, the repairs will be made by State forces at the Contractor's expense.

Full compensation for temporary facilities shall be considered as included in the contract lump sum prices paid for the various contract items of work involved and no additional compensation will be allowed therefore.

10-3.05 CONDUIT

All conduit installed shall be Type 1 unless otherwise specified.

RIGID GALVANIZED STEEL CONDUIT, THREADED COUPLINGS AND ELBOWS

The rigid galvanized steel (RGS) conduit, threaded couplings, and elbows shall conform to Section 86-2.05, "Conduit," of the Standard Specifications for Type 1 where shown on the plans.

LIQUID-TIGHT FLEXIBLE METAL CONDUIT

The liquid tight flexible metallic conduit shall conform to the following requirements:

A. The flexible metal shall be constructed of continuously interlocked strip and shall be coated with sunlight resistant PVC jacket.

B. The metal core shall be hot-dipped galvanized steel core with a heavy coating of zinc.
C. The jacket shall be resistant to weather, temperature, oil and chemical breakdown.
D. Conform to the provisions of NEC Article 351 under "Liquid-tight Flexible Metal Conduit.
E. UL listed for Safety 360.

10-3.06 PPORT HARDWARE FOR CONDUITS AND CABLES

STAINLESS STEEL POWER-STUD, ANCHOR-THREADED VERSION

All electrical items that use anchors to attach to the concrete structures shall use stainless steel power stud anchor-threaded version.

Stainless steel power-stud, anchor-threaded version shall have a one-piece anchor body with the length identification code. The anchor bodies shall be manufactured from Type 316 stainless steel and shall have an expansion mechanism, which consists of a pair interlocking independent wedges.

Anchors that have less than a 40 mm hole depth can be installed anywhere in the box. If the anchor will require a hole depth of greater than 40 mm, the Engineer will consult with the Structural Engineer of Record prior to approving the location and depth of the anchor. The f'c for the superstructure is 55 MPa. The average strength of the concrete will therefor be almost 62 MPa. As a consequence it will be difficult to drill.

Anchor Component	Component Material
Anchor Body	Type 316L Stainless Steel
Nut	Type 316L Stainless Steel
Washer	Type 316L Stainless Steel
Expansion Wedge	Type 316L Stainless Steel

ELECTRICAL HARDWARE

All electrical hardware, including but not limited to, bolts, nuts, washers, lock washers, fastening screws, expansion anchors, U-bolts and hold-down clamps shall be Type 316L stainless steel unless otherwise noted.

10-3.07 PULL BOXES

NEMA TYPE 4 SPLICE BOX SINGLE DOOR

The NEMA Type 4 single door splice box shall conform to the following:

Construction

A. Enclosure bodies are either 14-gage or 16-gage steel. All doors are 14-gage steel.
B. Seams shall be continuously welded and ground smooth, no holes or knockouts.
C. Stainless steel clamps on three sides of cover assure watertight seal.
D. Heavy gauge continuous hinge.
E. Cover removed by pulling stainless steel hinge pin.
F. Oil resistant gasket and adhesive.
G The box engraving, physical size and dimensions shall be as shown on the plans drawings.
H. Finish shall be white inside with ANSI 61 gray outside finish over phosphatized surfaces. Optional panels shall be white.

Industry Standards

A. UL 50 Type 4.
B. NEMA/EEMAC Type 4.
C. JIC standard EGP-1-1967 (14-gage only).
D. CSA Type 4.
E. IEC 529, IP-66.

15 kV SPLICE BOX

The high voltage splice box shall be NEMA Type 4, sized as required by code. The box shall conform to all applicable requirements in NEC, Article 370(D). Each cover shall be secured with at least ten stainless steel bolts. Cover makings for high voltage splice box shall read "High Voltage" and be permanently marked and readily visible. Enclosures and covers shall be steel, 14-gage minimum with seams continuously welded and ground smooth. High voltage splice box shall be installed at each high voltage cable splice location.

10-3.08 CONDUCTORS, CABLES AND WIRING

Splices shall be insulated by heat-shrink tubing of the appropriate size after thoroughly painting the spliced conductors with electrical insulating coating.

The minimum insulation thickness, at any point, for Type USE, RHH or RHW wire shall be 1.0 mm for conductor sizes No. 14 to No. 10, inclusive, and 1.3 mm for No. 8 to No. 2, inclusive. The minimum insulation thickness, at any point, for Type THW and TW wires shall be 0.69 mm for conductor sizes No. 14 to No. 10, inclusive, 1.02 mm for No. 8, and 1.37 mm for No. 6 to No. 2, inclusive.

Testing

The Contractor shall perform a high-voltage series lighting test consisting of the open circuit voltage of the connected constant current transformer between conductors and ground.

The high-voltage test shall not be performed on existing circuits or equipment. Non-testing of existing circuits and equipment shall not relieve the Contractor from the responsibility for malfunctioning of existing lighting circuits due to the Contractor making splices in or connecting to the circuits and such malfunctions shall be corrected at the Contractor's expense.

600 VOLT SINGLE CONDUCTOR CABLE

All 600-volt single conductor cable shall be the following unless otherwise noted on the plans. The cables shall be insulated with a EPR insulation rated for 600 volts. The cables shall be UL listed as Type RHH, RHW-2, or USE-2, VW-1 600 V. All cables No. 1/0 and larger shall be UL Type TC rated.

The conductor shall be soft annealed uncoated copper Class B stranded per ASTM B-8. The EPR insulation shall meet the requirements of ICEA S-68-516, NEMA WC-8, and UL Standards 44 and 854. The composite insulation thickness shall be as follows:

Conductor Size	EPR Thickness
No. 14 - No. 10	1.14 mm
No. 8	1.52 mm
No. 6 - No. 2	1.91 mm

The cable surface shall be printed in a contrasting color with the following information:

A. Manufacturers' name.
B. Plant number.
C. Conductor size.
D. Cable type.
E. Voltage rating.

CONTRACT NO. 04-0120R4

CONTRACT CHANGE ORDER NO. 68

SHEET 11 OF 42

The cable shall be manufactured by The Okonite Company, BICC Cables, Pirelli, or equal. Manufacturer shall furnish a notarized certificate of compliance to demonstrate cable furnished is in compliance with ICEA S-68-516 and UL 44.

600 VOLT MULTI-CONDUCTOR CABLE

All 600 volt rated multi-conductor cables shall be the following unless otherwise noted on the plans drawings. The cables shall be insulated with ethylene propylene rubber, assembled as a multi-conductor cable with flame resistant fillers and binder tape with an overall PVC jacket. The cables shall be capable of operating continuously in both wet and dry locations at conductor temperature of 90°C for normal operation, 130°C for emergency overload rating, and 250°C short circuit rating.

The conductors shall be soft annealed uncoated copper Class B stranded in conformance to the requirements in ASTM Designation B 8. The single conductors shall be ethylene propylene rubber insulated meeting the requirements of UL 1581 and ICEA S-68-516. Color coding for sizes No. 10, 12, 14 and 16 AWG shall conform to the requirements in ICEA Method I Table K-2. Sizes No. 8 and larger shall be numerically coded using ICEA Method 4. The insulation thickness shall be as follows:

Conductor Size	EPR Thickness
No. 16	0.64 mm
No. 14 - No. 10	0.76 mm
No. 8 - No. 2	1.14 mm

The insulated conductors (and grounding conductor if required) shall be cabled together with flame resistant fillers and binder tape. The jacket shall be extruded PVC meeting the physical and dimensional requirements of ICEA S-68-516. The cable shall pass the vertical tray flame test requirements of IEEE 383 and 1202 and UL 1277. The cable shall be UL listed as Type TC.

The cable surface shall be printed in a contrasting color with the following information:

A. Manufacturers' name.
B. Plant number.
C. Number of conductors.
D. Conductor size.
E. Cable type.
F. Voltage rating.

CONTRACT NO. 04-012084

CONTRACT CHANGE ORDER NO. 68

SHEET 12 OF 42

The cable shall be manufactured by The Okonite Company, BICC Cables, Pirelli, or equal. The manufacturer shall furnish a notarized certificate of compliance to demonstrate cable furnished is in compliance with ICEA S-68-516 and UL 1277.

500 kcmil INSULATED GROUNDING CONDUCTOR

The 500 kcmil insulated grounding conductor shall be Class B stranded, annealed uncoated copper per UL Standard 83. The conductor shall be insulated with PVC complying with the physical and electrical requirements of UL Standard 83 for Type THW. The conductor shall bear the UL label for Type THW.

600 VOLT ARMORED MULTI-CONDUCTOR CABLE

The 600 V armored cables shall be installed for the south-south staging. The individual conductor of the armored cable shall conform to the 600 V cable requirements as specified above in the special provisions. The armor sheath shall exceed the grounding conductor requirements of Table 250-95 of the National Electrical Code and UL 1569. The cable shall have stranded copper grounding conductor, located in the outer interstices. The armor sheath shall be impervious, continuous, welded, corrugated aluminum that will provides complete protection against moisture, liquid, and gasses and has excellent mechanical strength. The armor sheath shall be covered with low temperature black polyvinyl chloride to protect cable against chemical attack. The cable shall be UL Listed as type MC cable per Article 334 of the NEC.

SHIELDED-TWISTED PAIR CABLES

All shielded twisted pair No. 18 (0.832 mm^2) multi-conductor communication cables (fifty pairs) shall be stranded annealed copper (per ASTM Designations: B 3 and ASTM B 8). The insulated single conductors shall be twisted into pairs. The insulation shall be flame-retardant cross-linked polyethylene with color code in conformance with the requirements in ICEA Method 1. The insulation shall be 0.76 mm nominal. The cable components are cabled with non-hygroscopic fillers, as necessary, and an overall binder tape. The individual pairs shall be shielded with a 0.19 mm Aluminum/polymer tape with tinned copper drain wire applied helically over the pairs. The overall shield shall be a 0.19 mm Aluminum/polymer tape with tinned copper drain wire applied helically over the cable core.
The overall jacket shall be 2.8 mm flame-retardant and sunlight resistant polyvinyl chloride (PVC). A nylon ripcord shall be applied longitudinally under the overall jacket to facilitate jacket removal.

The cable shall be suitable for cable tray use and have the following ratings and listings:

A. UL Type TC - 600 volt.
B. UL Class XL.
C. UL Subject 13 and 1277.
D. IEEE 383 & 1202.
E. ICEA S-66-524 - 600 volt.

CONTRACT NO. 04-0126R4

CONTRACT CHANGE ORDER NO. 68

SHEET 13 OF 42

The cable shall be manufactured by Belden Cable, The Okonite Company, ~~BICC Cables, Pirelli~~, or equal. The manufacturer shall furnish a notarized certificate of compliance to demonstrate cable furnished is in compliance with ICEA S-68-516 and UL 44.

Communication Cable Splices

Splices shall be done only as approved by the Engineer. Splices for shielded No. 18 multi-conductor, twisted pair cables shall be as recommended by the cable manufacturer and suitable for the environment that the splice is located. The Contractor shall submit the cable manufacturer's recommended splicing method to the Engineer for approval prior to using the method. The Engineer shall approve splice locations. The splicing kits shall be manufactured by Raychem, 3M or other approved manufacturer.

15 kV CABLE

Cable Splices

All 15 kV splices shall be enclosed on a 15 kV splice box. The splices, shall be IEEE 404, heat shrinkable cable splices in kit form, capable of properly splicing cables specified in this section. Splice kits shall contain all necessary components to reinstate primary cable insulation, metallic shielding and grounding systems and overall jacket to the equivalent of the cable itself. Splices shall be of a uniform cross-section and shall consist of heat-shrinkable radiation crosslinked insulation. The outer insulating layer shall be bonded to a conducting layer for shielding. The splice shall be rejacketed with a heavy-wall, heat-shrinkable sealant lined sleeve to provide a waterproof hot melt adhesive seal. Splices shall contain heat-shrinkable radiation cross-linked high dielectric constant linear stress relief material. Splices shall contain a high relative permittivity electric stress relief mastic for insulation shield cutback treatment and a heat-activated sealant for environmental sealing. Kits

shall allow splicing cables with different types of insulation, conductor sizes, and shielding construction. Kits shall accommodate commercially available standard connectors.

Cable End Sealing Caps

The end seal caps shall be heat-shrinkable crosslinked polymeric end sealing caps capable of sealing cables specified in this section. End caps shall be precoated with a heat activated sealant.

DC High Potential Test

Perform DC high potential test of each conductor in accordance with NEMA WC 5.

15 kV Armored Shielded Cable

The three conductor 15 kV armored shielded cables shall be 133 percent insulation rated power cable designed to operate at conductor temperatures of 90°C normal, 130°C emergency, and 250°C short circuit conditions as defined by ICEA S-93-639 (NEMA WC-78) and (UL) Standard 1072. The cable shall be suitable for installations above or below grade, indoors or outdoors, and in wet or dry locations. The qualifying cable shall be (UL) labeled as MV-90, Sunlight Resistant and for cable tray use in accordance with UL Standard 1072.

The cable shall have a continuous corrugated welded aluminum sheath encases the cable core per UL 1072 and UL listing E-38916 recognized as a grounding conductor by NEC. The cable sheath shall provide complete protection against moisture, liquid and gasses and shall have excellent mechanical strength. The

sheath shall be protected with a low temperature polyvinyl chloride jacket in accordance with UL 1072 to protect the cable against chemical attack.

Conductors

The conductors shall be compressed, Class B stranded copper and shall be in accordance with the requirements of ICEA S-93-639. The copper conductors shall consist of all bare strands or tin-coated strands in the outer layer in conformance with the requirements in ASTM Designations: B 3, B 8 and B 33. Conductors shall be unbroken for the full length of the reels specified in the Purchase Order. Reels containing splices will be rejected.

Conductor Shield

The conductor shielding shall consist of an extruded, black-colored, nonmetallic semiconducting EPR thermosetting compound material in conformance with the provisions in Section 2.7 of ICEA S-93-639. The minimum average thickness shall be 0.5 mm.

Insulation

The insulation shall be a discharge resistant, ethylene propylene (EP) based compound and be listed by Underwriters Laboratories. The minimum average thickness of the insulation shall be 5.59 mm. The manufacturer shall perform the Insulation Corona Discharge Resistance Test (3.9.3.3 of ICEA S-93-639) tested in conformance with the requirements in ASTM Designation: D 2275-89, "Standard Test Method for Voltage Endurance of Solid Electrical insulating materials Subjected to Partial Discharges (Corona) on the Surface," and submit the results to the Engineer before acceptance of the cable.

Insulation Shielding

The insulation shielding shall consist of a nonmetallic semiconducting EPR material extruded directly over the insulation and a 0.12-mm bare copper tape. The nonmetallic semi conducting layer shall be black-colored with properties and thickness conforming to the requirements of Table 4a of ICEA S-68-516-93-639 and Tables 14.2 and 14.3 of UL-1072. The layer shall be free stripping from the EP insulation. The 0.12-mm bare copper tape shall be helical applied with a 15 percent overlap, directly over the nonmetallic layer.

Metallic Shield

The metallic shield shall be coated copper tape, helically applied with a minimum overlap of 12.5 percent, directly over the nonmetallic layer.

Phase Identification

A colored tape shall be applied longitudinally under the copper shielding tape to provide phase identification.

Assembly

The three phase conductors shall be cabled together with class B stranded, uncoated copper grounding conductor and suitable fillers to make round. Length of lay shall not exceed 35 times the phase conductor diameter. The grounding conductor shall comply with the requirement of UL Standard 1072.

Cable Tape

A suitable cable tape shall be applied over the assembly to hold the core together and provide bedding for the armor.

Armor

Aluminum steel interlocked armor shall be applied over the cable core. Armor shall be in accordance with UL Standard 1072 and Part 4 of ICEA.

Jacket

An extruded covering of PVC shall be applied over the armor. The average thickness and properties of the PVC covering shall be as specified in Part 4 of ICEA. The minimum thickness at any point shall be not less than 70 percent of the required average thickness. The covering shall meet the Sunlight Resistant requirements of UL.

Identification

An ink print legend shall be applied to the surface of the PVC covering providing cable and manufacturer identification.

SHIELDED-TWISTED PAIR ARMORED CABLES

The instrumentation armored cables shall be installed for the south-south staging. The individual conductor of the armored cable shall conform to the shielded-twisted pair cable requirements as specified above in the special provisions. The armor sheath shall be impervious, continuous, welded, corrugated aluminum that will provides complete protection against moisture, liquid, and gasses and shall have excellent mechanical strength and provides equipment grounding through the sheath. The armor sheath shall be covered with low temperature black polyvinyl chloride to protect cable against chemical attack. The cable shall be UL Listed.

10-3.09 FIELD TESTING

Field testing shall be performed in the presence of the Engineer. The Contractor shall notify the Engineer five days prior to conducting tests. The Contractor shall furnish all materials, instruments, labor, and equipment necessary to conduct field tests. The Contractor shall perform all tests recommended by the manufacturer unless specifically waived by the Engineer. The Contractor shall perform acceptance tests of all installed electrical equipment in accordance with latest applicable ICEA, NETA and IEEE standards. The tests shall be limited on cable test. The Contractor shall maintain a written record of all tests performed which includes date, test performed, personnel involved, devices tested, serial number and name of test equipment, and test results. All field test report shall be signed and dated by the Contractor. The Contractor shall provide and use safety devices such as rubber gloves, protective barriers, and danger signs to protect and warn personnel in test vicinity. The Contractor shall replace cables that are damaged due to improper procedures or handling.

10-3.10 PAYMENT

The contract lump sump price paid for Electrical Work shall include full compensation for furnishing all labor, materials, tools, equipment, and incidentals, and for doing all the work involved, complete in place, including manuals, preparation and delivery of any and all proposals, plans, submittals, or other documents to the Engineer, warranty work or modifications, software or software changes, testing and training, as shown on the plans, as specified in the Standard Specifications and these special provisions, and as directed by the Engineer.

INDEX TO ELECTRICAL PLAN

DWG. NO.	DESCRIPTION
E-1	GENERAL NOTES, SYMBOLS AND ABBREVIATIONS
E-2	PROJECT NOTES YBI VIADUCT REPLACEMENT / WEST TIE IN
E-3	SIGNAL AND LIGHTING (STAGE 1) - DEMO (EXISTING NORTH SIDE OF VIADUCT UPPER AND LOWER DECK)
E-4	SIGNAL AND LIGHTING (STAGE 1) - NEW (EXISTING NORTH SIDE OF VIADUCT UPPER AND LOWER DECK)
E-5	SIGNAL AND LIGHTING (STAGE 1) (EXISTING NORTH SIDE OF VIADUCT LOWER DECK)
E-6	SIGNAL AND LIGHTING (STAGE 1) (EXISTING SOUTH SIDE OF VIADUCT UPPER DECK)
E-7	SIGNAL AND LIGHTING (STAGE 2) LOWER SOUTH SIDE VIADUCT & SITE ELECTRICAL WORK
E-8	(E) VAULT #2 & #5 LIGHTING PLAN (STAGE 2) YBI VIADUCT REPLACEMENT / WEST TIE IN
E-9	NEW CIP UPPER DECK ELECRICAL WORK (STAGE 3) YBI VIADUCT REPLACEMENT / WEST TIE IN
E-10	NEW CIP LOWER DECK ELECRICAL WORK (STAGE 3) YBI VIADUCT REPLACEMENT / WEST TIE IN
E-11	SIGNAL AND LIGHTING (STAGE 4) YBI VIADUCT REPLACEMENT / WEST TIE IN
E-12	LOWER DECK ELECTRICAL WORK (STAGE 4) YBI VIADUCT REPLACEMENT / WEST TIE IN
E-13	LOWER DECK ELECTRICAL WORK (STAGE 4) YBI VIADUCT REPLACEMENT / WEST TIE IN
E-14	CALL BOXES ELECTRICAL WORK YBI VIADUCT REPLACEMENT / WEST TIE IN
E-15	DETAILS (STAGE 1 AND 2) YBI VIADUCT REPLACEMENT / WEST TIE IN 600 V CABLE BLOCK DIAGRAM
E-16	DETAILS (STAGE 3 AND 4) YBI VIADUCT REPLACEMENT / WEST TIE IN 600 V CABLE BLOCK DIAGRAM
E-17	DETAILS YBI VIADUCT REPLACEMENT / WEST TIE IN CALL BOX WIRING DIAGRAM
E-18	DETAILS YBI VIADUCT REPLACEMENT / WEST TIE IN
E-19	DETAILS YBI VIADUCT REPLACEMENT / WEST TIE IN SECTIONS AND DETAILS
E-20	DETAILS YBI VIADUCT REPLACEMENT / WEST TIE IN 480 V ROADWAY LIGHTING WIRING DIAGRAM
E-21	DETAILS YBI VIADUCT REPLACEMENT / WEST TIE IN 480 V PANEL FEEDER WIRING DIAGRAM
E-22	DETAILS YBI VIADUCT REPLACEMENT / WEST TIE IN TERMINAL BOX TB-01 CONNECTION DIAGRAM
E-23	DETAILS YBI VIADUCT REPLACEMENT /WEST TIE IN SPLICE BOX PB-02 AND PB-05 CONNECTION DIAGRAM
E-24	DETAILS YBI VIADUCT REPLACEMENT /WEST TIE IN SPLICE BOX PB-02 AND PB-05 CONNECTION DIAGRAM
E-25	DETAILS YBI VIADUCT REPLACEMENT /WEST TIE IN TERMINAL BOX TB-20W CONNECTION DIAGRAM
E-26	DETAILS YBI VIADUCT REPLACEMENT / WEST TIE IN 480 V LVCC-C SINGLE LINE DIAGRAM

PROJECT SYMBOLS:

(See ES-1A and ES-1B for addittional Standard Symbols)

- Existing call box, adjacent number indicates ID.
- Existing pullbox, wall mounted Type 1 unless otherwise noted.
- New call box state furnished. adjacent number indicates ID.
- New junction box, wall mounted.
- (1) Sheet notes, applicable only to the drawings.
- [1] Project notes, applicable for all drawings.

ABBREVIATIONS

(See ES-1A and ES-1B for addittional Standard Symbols)

A, Amp	Ampere
BKR	Breaker
CEC	California Electrical Code
CB	Call Box
(E), Exist	Existing
G, GND, Gnd	Ground
LP	Lighting Panel
LVCC	Low Voltage Control Center
RTU	Remote Terminal Use
RTU	Remote Terminal Use
THRU	through
VIF	Verify in Field
W	Wire
WP	Weatherproof
YBI	Yerba Buena Island
(R)	RELOCATED

Caltrans Metric

REGISTERED PROFESSIONAL ENGINEER
RAFAEL ALCIDES RAVELO
C68941
EXP. 12/31/07
CIVIL
STATE OF CALIFORNIA

DIST	COUNTY	ROUTE	KILOMETER POST TOTAL PROJECT	SHEET No	TOTAL SHEETS
04					

Carol Light 1/18/07
REGISTERED ELECTRICAL ENGINEER DATE

REGISTERED PROFESSIONAL ENGINEER
CAROL LIGHT
No. 10145
Exp. 09/30/07
ELECTRICAL
STATE OF CALIFORNIA

PLANS APPROVAL DATE

PARSONS BRINCKERHOFF QUADE & DOUGLAS, INC.
303 Second St., Suite 700N
San Francisco, CA 94107-1317

SILVERMAN & LIGHT
1201 PARK AVENUE - SUITE 100
EMERYVILLE, CA 94608-3632

The State of California or its officers or agents shall not be responsible for the accuracy or completeness of electronic copies of this plan sheet.

Caltrans now has a web site! To get to the web site, go to http://www.dot.ca.gov

GENERAL NOTES

1. Conduit routing is diagramatic. Pull box location shall be located as shown onplans. The contractor shall provide additional pull boxes as required. Exact locations of equipment and devices may be adjusted depending on field conditions or by the engineer.
2. Minimum size of conduit shall be 21C. Exposed conduit shall be PVC coated galvanized rigid steel, and conduits located inside girder shall be galvanized rigid steel.
3. Conduit fitting for 78 mm conduits and larger shall have a 610 minimum bending radius.
4. All equipment and devices shall be provided with wire ground.
5. All feeders and branch circuits shall be provided with ground wire.
6. Contractor shall label all conductors and cables per wiring diagrams.
7. All E-sheets are accurate for electrical work only.
8. All existing equipment shall remain in place unless otherwise noted.
9. Locations of conduits, pull boxes and other equipment shown on the plan are approximate and may be changed to suit field conditions.
10. The contractor shall call Underground Service Alert (USA) at (800) 642-2444, 48 hours prior to all excavation.
11. All exposed circuit or conductor connections shall be protected with a corrosion coating.
12. Contractor to verify in field existing live circuit prior to cutting and splicing.

CONTRACT NO. 04-0120R4

CONTRACT CHANGE ORDER 68

SHEET 16 OF 42

GENERAL NOTES AND SYMBOLS
YBI VIADUCT REPLACEMENT / WEST TIE IN

E-1

DATE	REVISED BY	DATE REVISED

CALCULATED/DESIGNED BY: BJ
CHECKED BY: CL

DESIGN OVERSIGHT: Behzad Golemohammadi

STATE OF CALIFORNIA - DEPARTMENT OF TRANSPORTATION
Caltrans

LAST REVISION 00-00-00
DATE PLOTTED => 09-FEB-2007
TIME PLOTTED => 03:05

THIS PLAN ACCURATE FOR ELECTRICAL WORK ONLY

FOR REDUCED PLANS ORIGINAL SCALE IS IN MILLIMETERS 0 20 40 60 80

DGN FILE => E-1.dgn
USERNAME => hwong

CU 04251

EA 0120P1

PROJECT NOTES:

1. Existing 41mm conduit.
2. Existing 53mm conduit
3. Existing 41c with 3 #6 (480V, Lighting)
4. Install new 78mm conduit with 3 #8, 5-6 #16 conductor cable to match existing.
5. Existing 41c, with 6 #6 +G, (circuits #103 and #234) to (e) TB-20W located in (E) vault #2.
6. Install new 41mm conduit with new 3 #6+G (circuit #243).
7. Install new NEMA type 4 splice box below floor beam upper deck. Splice box shall have a minimum of 305(L) x 305(W) x 152(D). Fasten box on cieling with four (4) 10-24 concrete expansion anchors and hex head cap screws.
8. Install new 41 mm conduit with 3 #8,1-6 #16 conductor cable to match existing.
9. Install new 3 #8, 2-6 #16 conductor cable in existing conduit to match existing.
10. Install and provide new Terminal Block in (E)TB-01 for call boxes #238 and #348 to match existing.
11. Install new four (4) 1-6 #16 conductor cable (for call boxes) between (E) TB-01 and (E)RTU-7 (located in YBI Substation). Route cables in existing 103 mm spare conduit via (E) MH-2 and (E) duct bank.
12. Install new 53mm conduit with 3 #8, 2-6 #16 conductor cable to match existing. (For CB #138 & CB #338).
13. Install new 41mm conduit with 3 #8, 1-6 #16 conductor cable to match existing. (For CB #338)
14. Coil enough length of 1-6 #16 conductor cable and tape inside pull box for future connection to CB #138 in stage 4 construction.
15. Existing 41c with 3 #8 (480V, Lighting)
16. Existing 41c with 3 #6+G (480V, Lighting)
17. Install new 53mm conduit with 3 #8, 2-6 #16 conductor cable to match (E), for call boxes #238 & #438.
18. Install new 41c, 3 #6+G (480V, Lighting)
    41c, MT (48V, lighting).
19. Install 41C, MT (Low Voltage, Communication).
20. Install new 41C, 3 #6+G Ckt 247 (480V,Lighting)
21. Existing 41c, 3 #6+G Ckt 237 (480V,Lighting).
    3#6+g Ckt #239 (480V, Lighting)..
22. Install new 41C, 6 #6+G (480V, Lighting)
23. Install new 53mm conduit with 3 #8 and two (2) #16 conductor cables.

DATE	REVISED BY	DATE REVISED

CALCULATED/DESIGNED BY: BJ
CHECKED BY: CL

DESIGN OVERSIGHT: Behzad Golemohammadi

STATE OF CALIFORNIA - DEPARTMENT OF TRANSPORTATION
Caltrans

Caltrans Metric

Carol Light — 1/18/07
REGISTERED ELECTRICAL ENGINEER — DATE

REGISTERED PROFESSIONAL ENGINEER
CAROL LIGHT
No. 10145
Exp. 09/30/07
ELECTRICAL
STATE OF CALIFORNIA

PLANS APPROVAL DATE

PARSONS BRINCKERHOFF QUADE & DOUGLAS, INC.
303 Second St., Suite 700N
San Francisco, CA 94107-1317

SILVERMAN & LIGHT
1201 PARK AVENUE - SUITE 100
EMERYVILLE, CA 94608-3632

The State of California or its officers or agents shall not be responsible for the accuracy or completeness of electronic copies of this plan sheet.

Caltrans now has a web site! To get to the web site, go to http://www.dot.ca.gov

REGISTERED PROFESSIONAL ENGINEER
RAFAEL ALCIDES RAVELO
C68941
EXP. 12/31/07
CIVIL
STATE OF CALIFORNIA

CONTRACT NO. 04-0120R4

CONTRACT CHANGE ORDER NO. 68

SHEET 17 OF 42

PROJECT NOTES
YBI VIADUCT REPLACEMENT / WEST TIE IN

E-2

LAST REVISION 00-00-00
DATE PLOTTED => 09-FEB-2007
TIME PLOTTED => 03:10

THIS PLAN ACCURATE FOR ELECTRICAL WORK ONLY
FOR REDUCED PLANS ORIGINAL SCALE IS IN MILLIMETERS
0 20 40 60 80
DGN FILE =>E-2.dgn
USERNAME => hwong

CU 04251	EA 0120P1

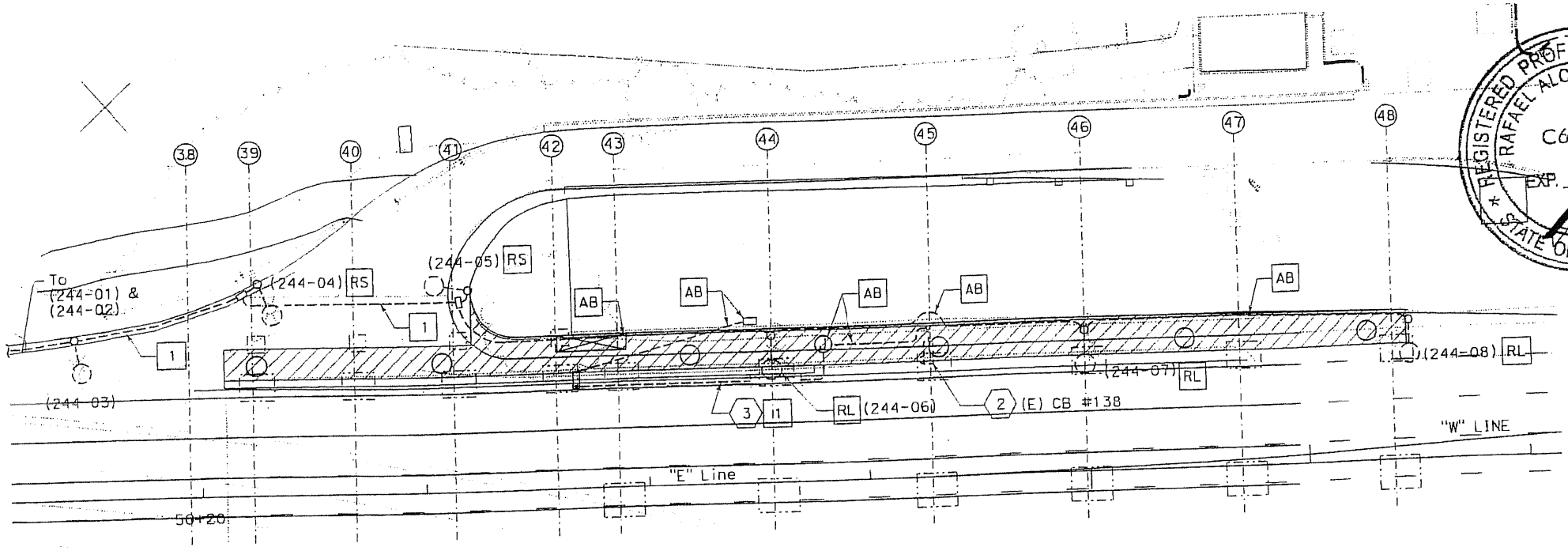

NORTH UPPER DECK PLAN

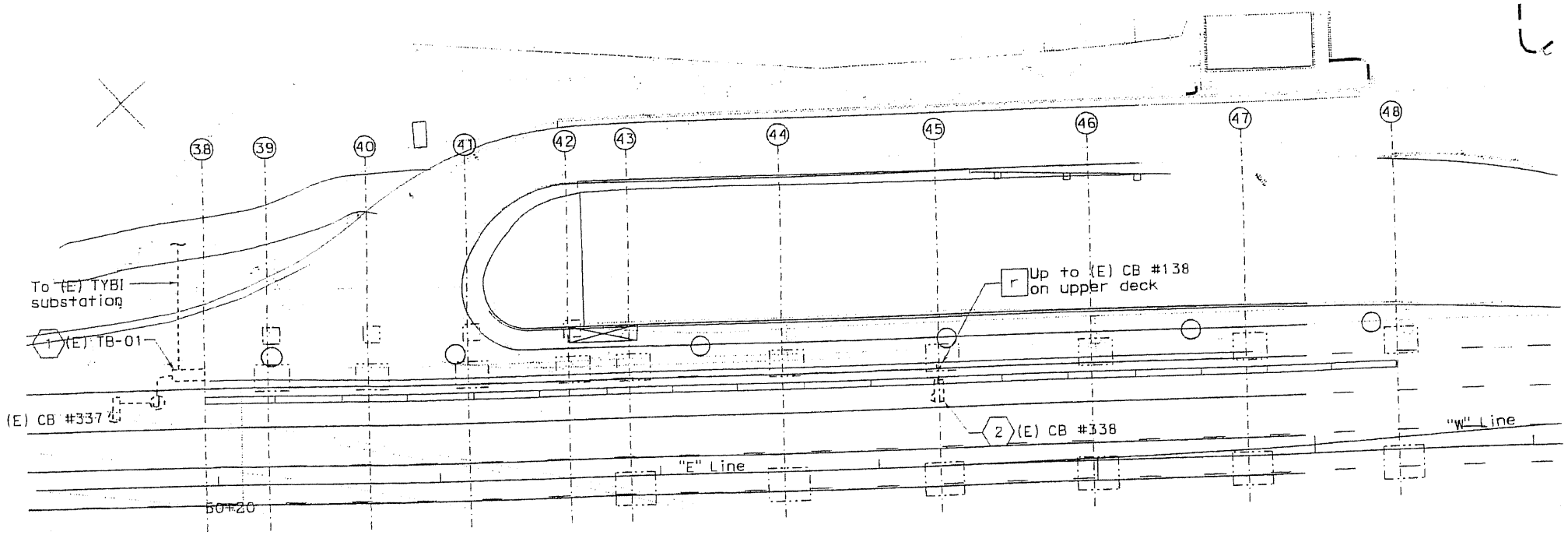

NORTH LOWER DECK PLAN

SHEET NOTES:

1. Existing TB-01 located on the north retaining wall near Bent #38.
2. Remove and relocate existing call box, keeping 9-pin straight plug connection intact with one (1) meter length of cable pigtail for splicing at temporary location as directed by engineer.
3. Existing 41c conduit (for CBS 138 & 338) mounted on longitudinal side of the beam to remain in place.

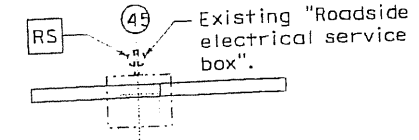

@ BENT 45
No scale

REGISTERED PROFESSIONAL ENGINEER
RAFAEL ALCIDES RAMOS
C68941
EXP. 12/31/07
CIVIL
STATE OF CALIFORNIA

Caltrans Metric

Carol Light 1/18/07
REGISTERED ELECTRICAL ENGINEER DATE

REGISTERED PROFESSIONAL ENGINEER
CAROL LIGHT
No. 10145
Exp. 09/30/07
ELECTRICAL
STATE OF CALIFORNIA

PLANS APPROVAL DATE

PARSONS BRINCKERHOFF QUADE & DOUGLAS, INC.
303 Second St., Suite 700N
San Francisco, CA 94107-1317

SILVERMAN & LIGHT
1201 PARK AVENUE - SUITE 100
EMERYVILLE, CA 94608-3632

The State of California or its officers or agents shall not be responsible for the accuracy or completeness of electronic copies of this plan sheet.

Caltrans now has a web site! To get to the web site, go to http://www.dot.ca.gov

CONTRACT NO. 04-0120R4

CONTRACT CHANGE ORDER NO. 68

SHEET 18 OF 42

SIGNAL AND LIGHTING (STAGE 1) - DEMO
EXISTING NORTH SIDE OF VIADUCT UPPER AND LOWER DECK

SCALE: 1:250

E-3

DATE	REVISED BY	DATE REVISED

CALCULATED/DESIGNED BY: BJ
CHECKED BY: CL

DESIGN OVERSIGHT: Behzad Golemohammadi

STATE OF CALIFORNIA - DEPARTMENT OF TRANSPORTATION
Caltrans

THIS PLAN ACCURATE FOR ELECTRICAL WORK ONLY

FOR REDUCED PLANS ORIGINAL SCALE IS IN MILLIMETERS 0 20 40 60 80

ALL DIMENSIONS ARE IN METERS UNLESS OTHERWISE SHOWN

DGN FILE => E-3.dgn
USERNAME => hwong

CU 04251 | EA 0120P1

LAST REVISION 00-00-00
DATE PLOTTED => 09-FEB-2007
TIME PLOTTED => 03:13

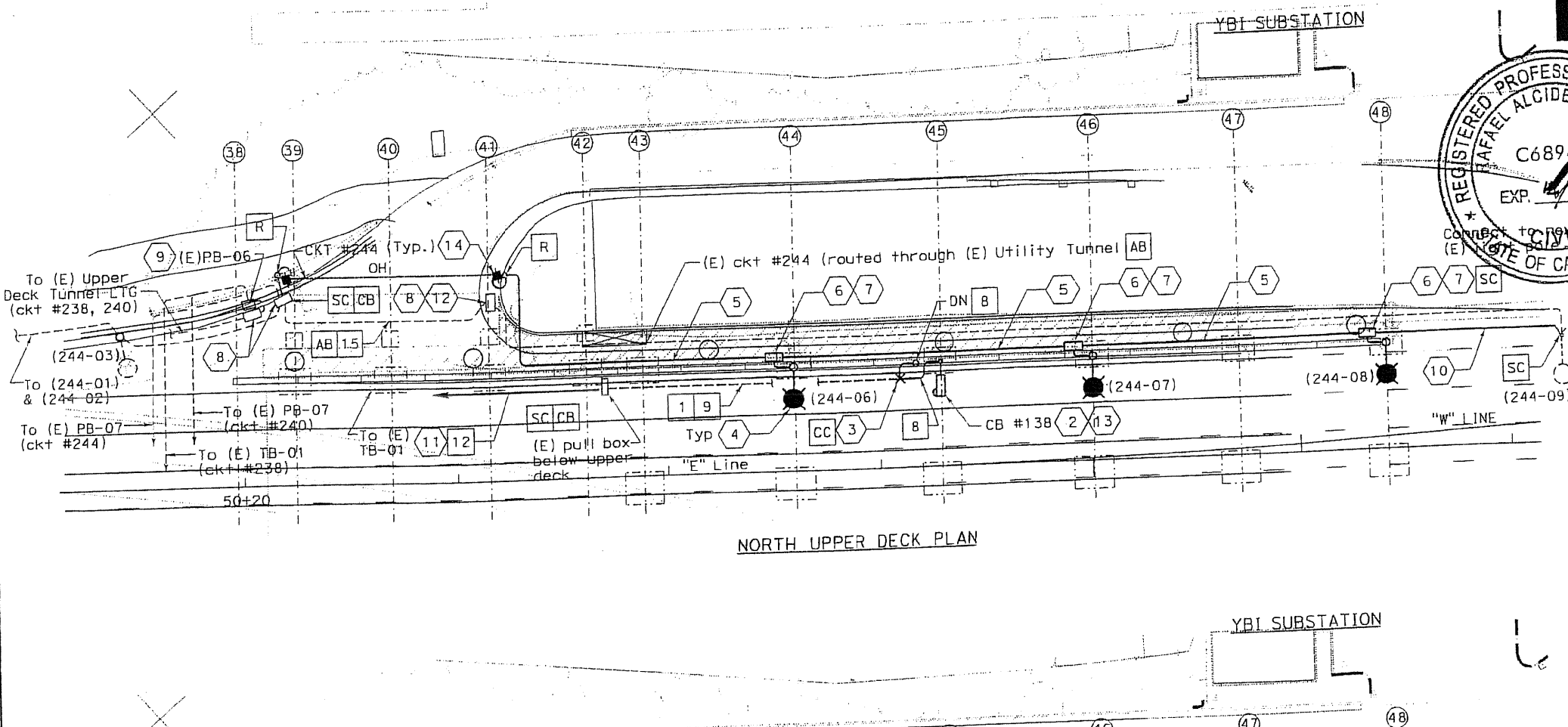

NORTH UPPER DECK PLAN

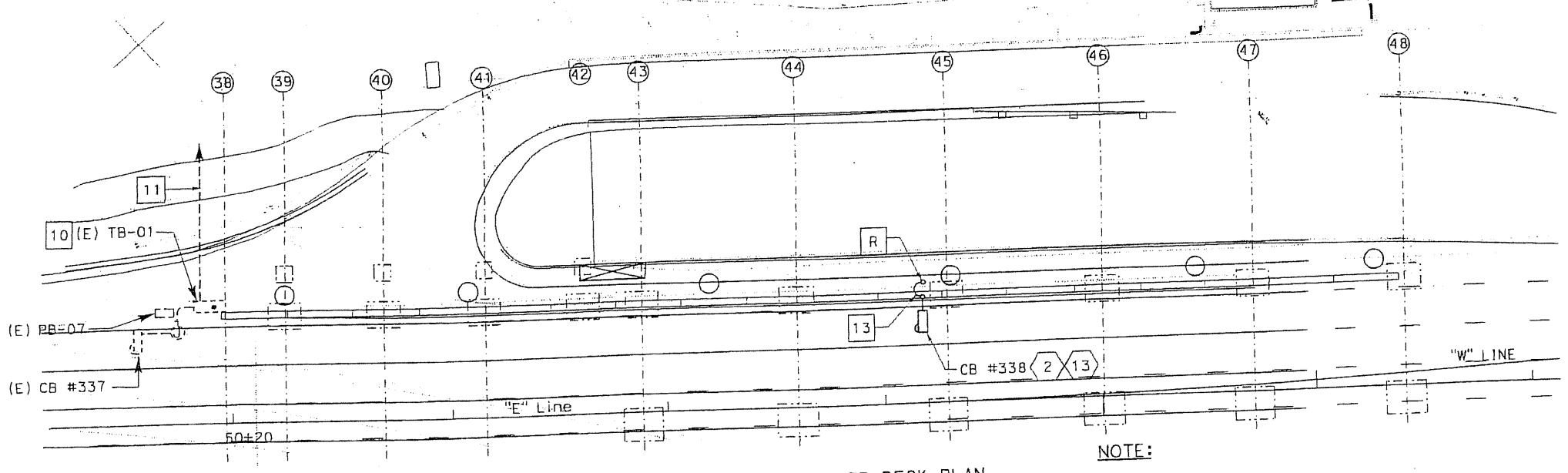

NORTH LOWER DECK PLAN

RS 45 Existing "Roadside electrical service box".

@ BENT 45
No scale

NOTE:

1. Reference:
   -For (E) TB-01 schedule, see sheet E-21.

SHEET NOTES:

1. Extisting TB-01 and PB-07 located on the north retaining wall near Bent #38.
2. Install relocated call box at this location on k-rail and provide splice box for reconnection. Put into operation at the end of stage 1 or as directed by engineer.
3. Intercept (E) 41c conduit (CB #138 & CB #338) and extend to new location of relocated Call Box.
4. Install relocated lighting standard on temporary k-rail barrier. See temporary light pole foundation detail on E18.
5. Install new 41mm flex conduit wih 3 #6+G (ckt 244). Run flex conduit along K-rail. Provide adequate protetion and support for maximum protection from traffic and personnel. Provide cable connectors.
6. Provide Nema 3 pull box. Install pull box on the outside face of K-rail.
7. Provide 27mm flex conduit with 3 #10 and install new splice connector in adjacent pull box.
8. Existing Pull Box embedded in existing concrete curb to remain in place.
9. Existing Junction Box on top of existing concrete railing to remain in place.
10. Install new 41mm Flex conduit with 3 #8+G. Route conduit along (E) concrete railing and stub into conduit along (E) light pole base. Provide conduit support per NEC.
11. Route new conduit along the outside face of (E) structure and terminate at (E) TB-01 Terminal cabinet.
12. Cut (E) ckt #244 that fed (E) light pole pole (244-09) after new jumper is installed between (E) light pole (244-08) and (E) light pole (244-09). See 600 V block diagram on E-16.
13. Disconnect and remove call boxes at the beginning of stage 3. Call boxex will be reused or reinstalled on stage 4 construction.
14. Install 14 M wood pole with pole guy, overhead 3 #6 (480 V) conductors, conduit riser and other equipment as required to provide temporary lighting power.

CONTRACT NO. 04-0120R4

CONTRACT CHANGE ORDER NO. 68

SHEET 19 OF 42

SIGNAL AND LIGHTING (STAGE 1) - NEW
EXISTING NORTH SIDE OF VIADUCT UPPER AND LOWER DECK

SCALE: 1:250

E-4

ALL DIMENSIONS ARE IN METERS UNLESS OTHERWISE SHOWN

THIS PLAN ACCURATE FOR ELECTRICAL WORK ONLY

FOR REDUCED PLANS ORIGINAL SCALE IS IN MILLIMETERS 0 20 40 60 80

DGN FILE => E-4.dgn
USERNAME => hwang

CU 04251

EA 0120P1

LAST REVISION 00-00-00

DATE PLOTTED => 09-FEB-2007
TIME PLOTTED => 03:14

Caltrans Metric

Carol Light
REGISTERED ELECTRICAL ENGINEER
1/18/07
DATE

REGISTERED PROFESSIONAL ENGINEER
CAROL LIGHT
No. 10145
Exp. 09/30/07
ELECTRICAL
STATE OF CALIFORNIA

PLANS APPROVAL DATE

PARSONS BRINCKERHOFF QUADE & DOUGLAS, INC.
303 Second St., Suite 700N
San Francisco, CA 94107-1317

SILVERMAN & LIGHT
1201 PARK AVENUE - SUITE 100
EMERYVILLE, CA 94608-3632

The State of California or its officers or agents shall not be responsible for the accuracy or completeness of electronic copies of this plan sheet.

Caltrans now has a web site! To get to the web site, go to http://www.dot.ca.gov

REGISTERED PROFESSIONAL ENGINEER
RAFAEL ALCIDES REVELO
C68944
EXP. 12/31/07
STATE OF CALIFORNIA

DATE	REVISED BY	DATE REVISED
BJ	CL	

CALCULATED/DESIGNED BY
CHECKED BY

DESIGN OVERSIGHT
Behzad Golemohammadi

STATE OF CALIFORNIA - DEPARTMENT OF TRANSPORTATION
Caltrans

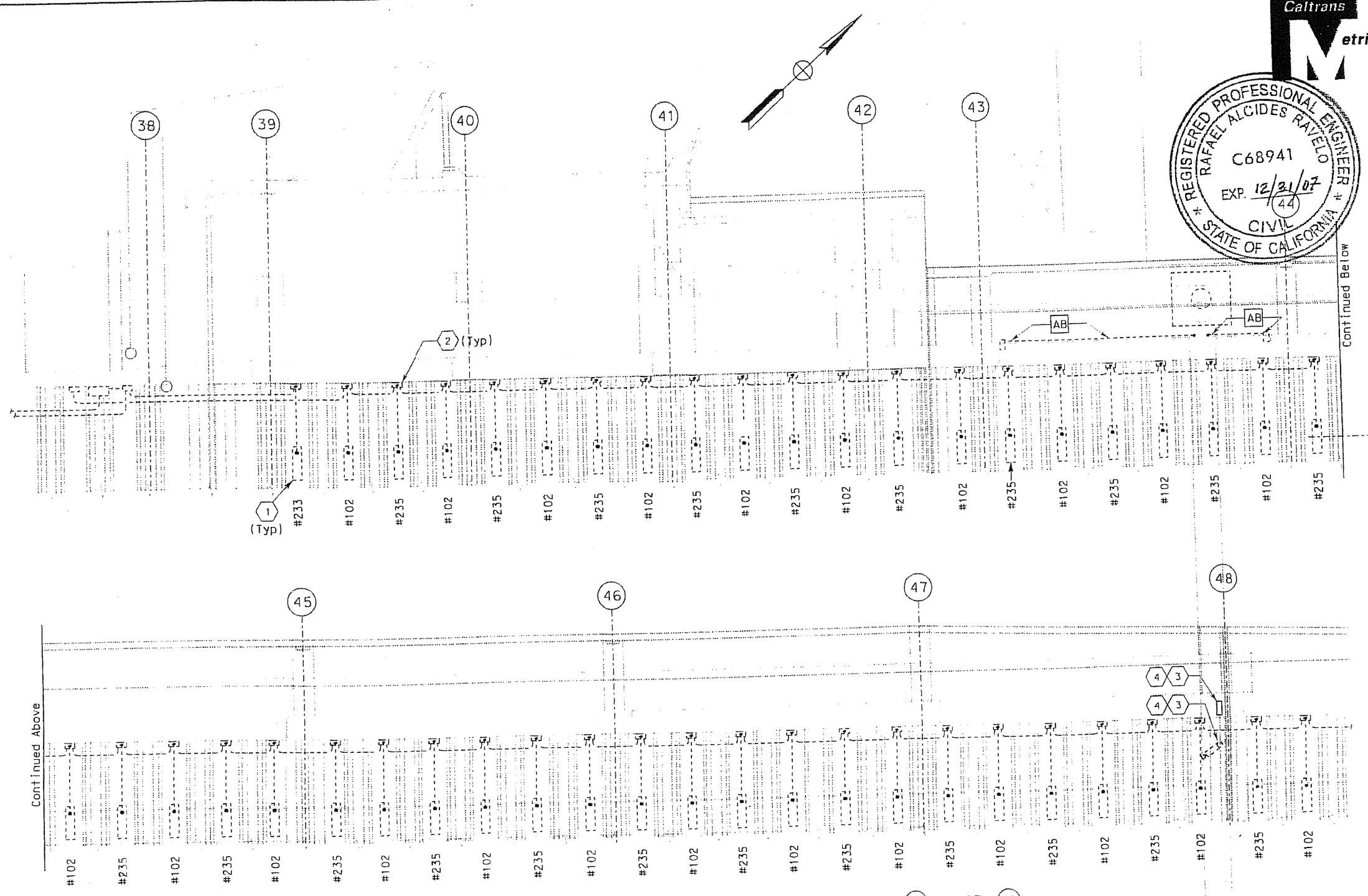

NORTH SIDE OF VIADUCT BETWEEN BENTS (38) AND (48)
LOWER DECK LIGHTING PLAN

SHEET NOTES:

1. Existing lighting fixtures, 180-watt, single lamp, low pressure sodium, with integral ballast.
2. Existing splice boxes and lighting fixtures from Bent (38) to east of Bent (48) shall remain in place.
3. Contractor shall move junction box for CCTV, CCTV camera and associated conduit and wiring from Bent 48A to Bent 48B.
4. Contractor to field verify (E) circuits prior to cutting or splicing.

℄ Lighting Fixture

Caltrans Metric

REGISTERED PROFESSIONAL ENGINEER
RAFAEL ALCIDES RAVELO
C68941
EXP. 12/31/07
CIVIL
STATE OF CALIFORNIA

DIST	COUNTY	ROUTE	TOTAL PROJECT	NO	SHEETS
04					

Carol Light — REGISTERED ELECTRICAL ENGINEER — 1/18/07 DATE

REGISTERED PROFESSIONAL ENGINEER
CAROL LIGHT
No. 10145
Exp. 09/30/07
ELECTRICAL
STATE OF CALIFORNIA

PLANS APPROVAL DATE

PARSONS BRINCKERHOFF QUADE & DOUGLAS, INC.
303 Second St., Suite 700N
San Francisco, CA 94107-1317

SILVERMAN & LIGHT
1201 PARK AVENUE - SUITE 100
EMERYVILLE, CA 94608-3632

The State of California or its officers or agents shall not be responsible for the accuracy or completeness of electronic copies of this plan sheet.

Caltrans now has a web site! To get to the web site, go to http://www.dot.ca.gov

CONTRACT NO. 04-0120R4

CONTRACT CHANGE ORDER NO. 68

SHEET 20 OF 42

SIGNAL AND LIGHTING (STAGE 1)
EXISTING NORTH SIDE OF VIADUCT LOWER DECK

SCALE: 1:100

ALL DIMENSIONS ARE IN METERS UNLESS OTHERWISE SHOWN

E-5

DATE	REVISED BY	DATE REVISED
5/03	BH	5/03

CALCULATED/ DESIGNED BY
CHECKED BY

STATE OF CALIFORNIA - DEPARTMENT OF TRANSPORTATION
Caltrans

DESIGN OVERSIGHT
Behzad Golemohammadi

LAST REVISION 00-00-00
DATE PLOTTED => 09-FEB-2007
TIME PLOTTED => 03:14

THIS PLAN ACCURATE FOR ELECTRICAL WORK ONLY.

THIS PLAN ACCURATE FOR ELECTRICAL WORK ONLY

FOR REDUCED PLANS ORIGINAL SCALE IS IN MILLIMETERS
0 20 40 60 80

DGN FILE => E-5.dgn
USERNAME => hwong

CU 04251

EA 0120P1

DIST	COUNTY	ROUTE	KILOMETER POST TOTAL PROJECT	SHEET No	TOTAL SHEETS
04					

Carol Light — REGISTERED ELECTRICAL ENGINEER — 1/18/07 DATE

PLANS APPROVAL DATE

CAROL LIGHT No 10145 Exp. 09/30/07 ELECTRICAL — REGISTERED PROFESSIONAL ENGINEER — STATE OF CALIFORNIA

PARSONS BRINCKERHOFF QUADE & DOUGLAS, INC.
303 Second St., Suite 700N
San Francisco, CA 94107-1317

SILVERMAN & LIGHT
1201 PARK AVENUE - SUITE 100
EMERYVILLE, CA 94608-3632

The State of California or its officers or agents shall not be responsible for the accuracy or completeness of electronic copies of this plan sheet.

Caltrans now has a web site! To get to the web site, go to http://www.dot.ca.gov/

REGISTERED PROFESSIONAL ENGINEER — RAFAEL ALCIDES RAVELO — C68941 — EXP 12/31/07 — CIVIL — STATE OF CALIFORNIA

Caltrans Metric

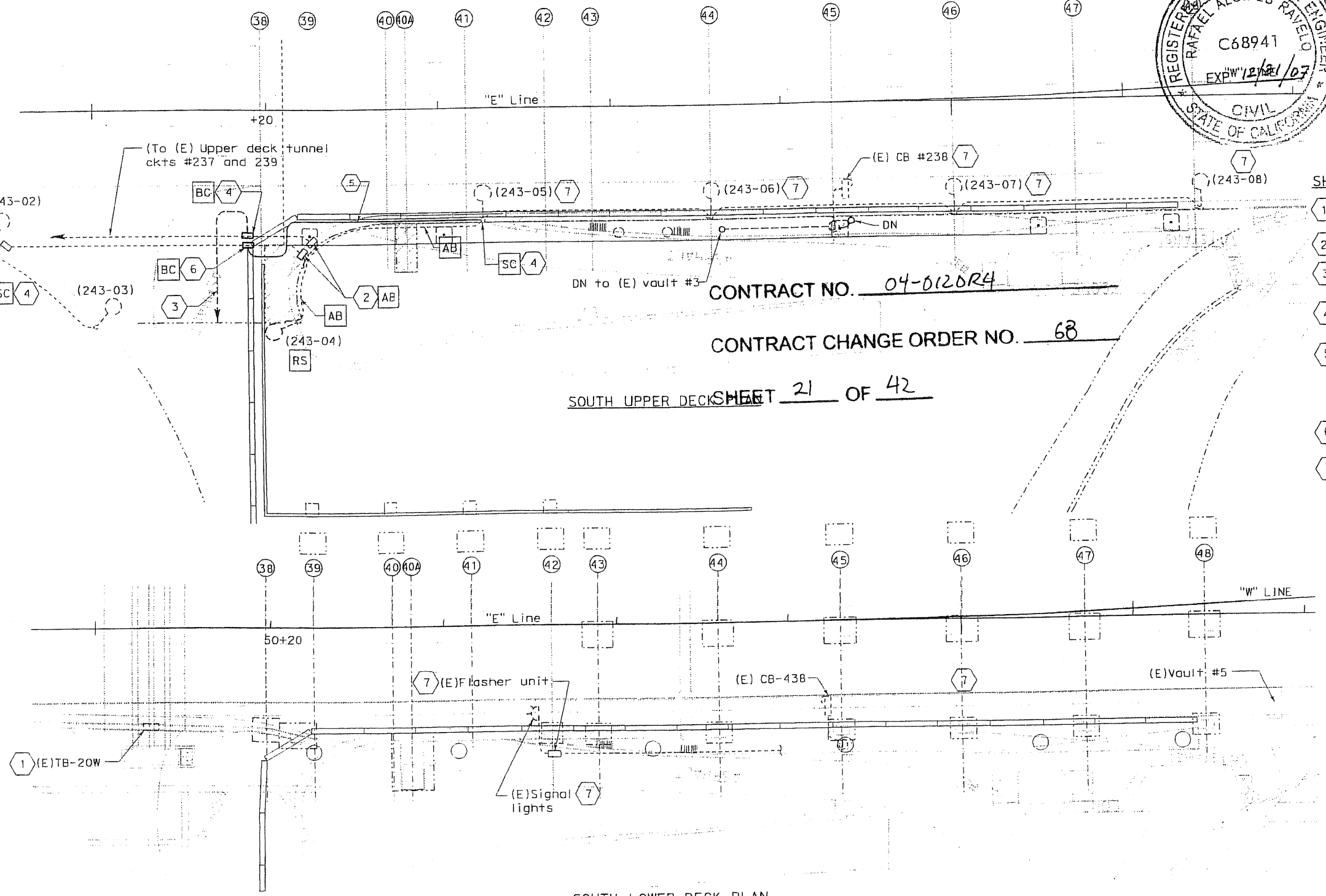

SOUTH LOWER DECK PLAN

SHEET NOTES:

1. Existing TB-20W is located in (E) vault #2A.
2. Existing pull box embedded in existing curb.
3. Intercept (E) conduit and extend circuits #237 and #239 to (E)TB-20W and connect.
4. Contractor to verify in field existing circuit prior to cutting and splicing.
5. Install new 41mm flexible conduit with 3 #6+G and route along the outside face of k-rail. Provide conduit support per N.E.C. and provide protection during construction.
6. Terminate flexible conduit in pull box and connect cable to (E) circuit #243.
7. Existing electrical equipment shall be maintain in effective operation until directed by engineer.

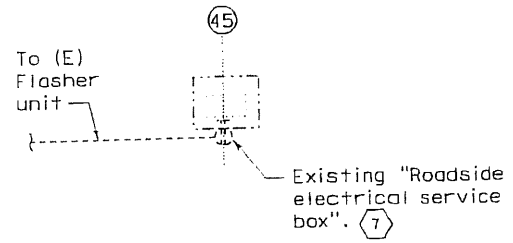

@ BENT 45
No scale

NOTE:

1. Reference:

-For (E) TB-20W schedule, see sheet E-xx.

-For permanent lighting conductor use 3/c+gnd #6, 600 V, EPR insulation.

CONTRACT NO. 04-0120R4

CONTRACT CHANGE ORDER NO. 68

SHEET 21 OF 42

SIGNAL AND LIGHTING (STAGE 1)
EXISTING SOUTH SIDE OF VIADUCT UPPER DECK

SCALE: 1:250

E-6

DESIGN OVERSIGHT	CALCULATED/ DESIGNED BY	DATE	REVISED BY	DATE REVISED
Behzad Golemohammadi	CHECKED BY	BJ	CL	

STATE OF CALIFORNIA - DEPARTMENT OF TRANSPORTATION — Caltrans

THIS PLAN ACCURATE FOR ELECTRICAL WORK ONLY

ALL DIMENSIONS ARE IN METERS UNLESS OTHERWISE SHOWN

FOR REDUCED PLANS ORIGINAL SCALE IS IN MILLIMETERS 0 20 40 60 80

DGN FILE => E-6.dgn
USERNAME => hwong

CU 04251

EA 0120P1

LAST REVISION 00-00-00

DATE PLOTTED => 09-FEB-2007
TIME PLOTTED => 03:14

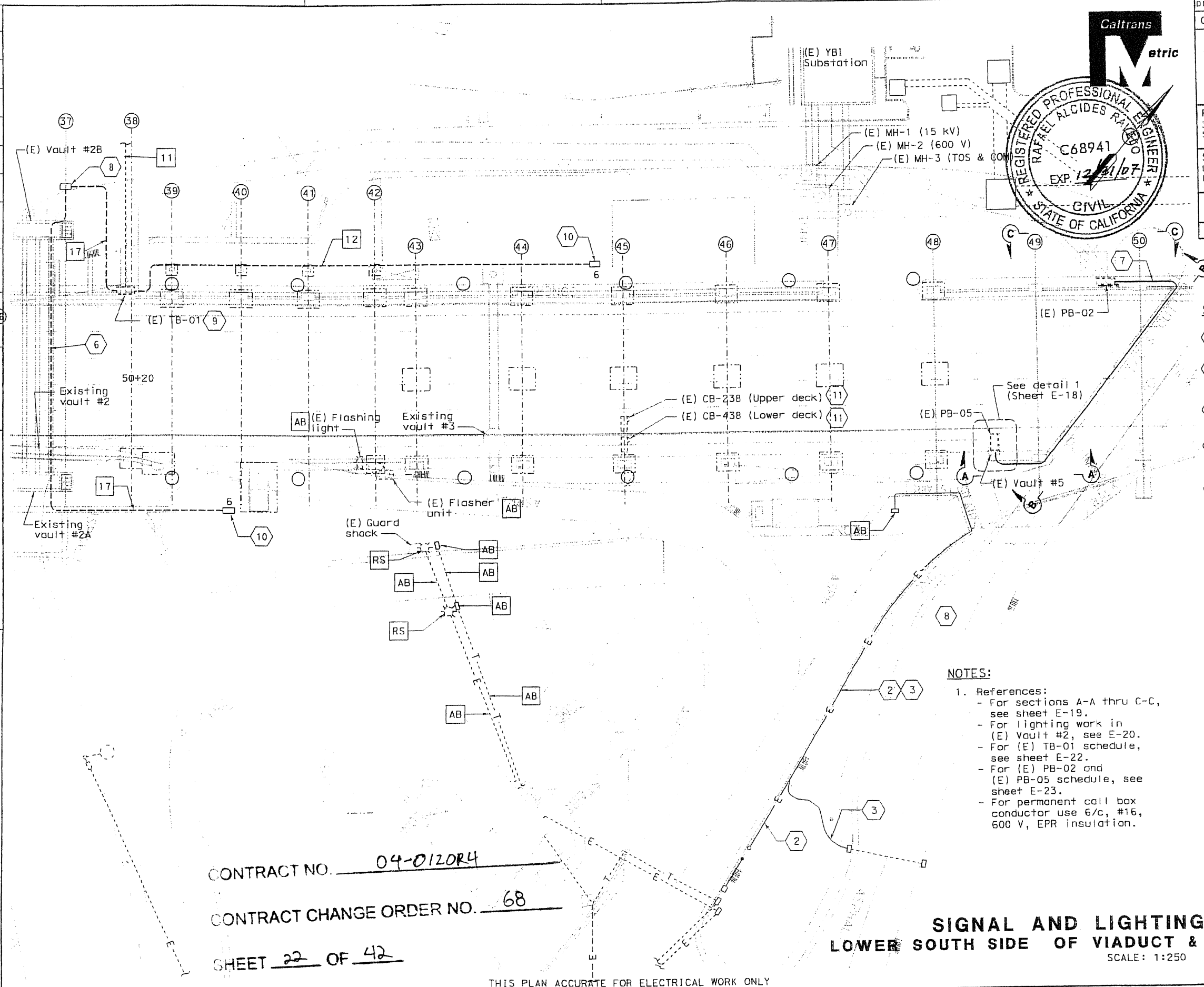

REGISTERED PROFESSIONAL ENGINEER
RAFAEL ALCIDES RAMOS
C68941
EXP. 12/31/07
CIVIL
STATE OF CALIFORNIA

Caltrans Metric

DIST	COUNTY	ROUTE	KILOMETER POST TOTAL PROJECT	SHEET No	TOTAL SHEETS
04					

Carol Light — REGISTERED ELECTRICAL ENGINEER — 1/18/07 DATE

REGISTERED PROFESSIONAL ENGINEER — CAROL LIGHT — No. 10145 — Exp. 08/30/07 ELECTRICAL — STATE OF CALIFORNIA

PLANS APPROVAL DATE

PARSONS BRINCKERHOFF QUADE & DOUGLAS, INC.
303 Second St., Suite 700N
San Francisco, CA 94107-1317

SILVERMAN & LIGHT
1201 PARK AVENUE - SUITE 100
EMERYVILLE, CA 94608-3632

The State of California or its officers or agents shall not be responsible for the accuracy or completeness of electronic copies of this plan sheet.

Caltrans now has a web site! To get to the web site, go to http://www.dot.ca.gov

SHEET NOTES:

1. Existing pullbox embedded in (E) concrete curb.
2. Remove and scrap existing conduits ½",2½"C,¾"C) running along the side of existing guard rail.
3. Existing 53mm flex with fiber to microwave antenna to be relocated by Caltrans.
4. Provide adequate protection to conduit and wires for personnel and traffic during construction.
5. For future extension to Call Box CB#438
6. Route new armored cable with 3 #6, 2-6 #16conductor cable to match existing from (E) TB-01 via (E) Vault #2B, (E) Utility tunnel and (E) Vault #2A.
7. Route new armored cable with 2 #6+G for ckt #334 along (E) retaining wall to (E) PB-05 located in (E) vault #5.
8. Intercept (E) 53mm conduit and extend to (E) TB-01.
9. Existing TB-01 is located on the north retaining wall near Bent #38.
10. Provide enough cable length and coil tape inside pull box for future splicing.
11. Remove (E) call box at the end of this stage and keeping 9-pin straight plug connection intact with one (1) meter length of cable pigtail for splicing at temporary location on stage 4.

NOTES:

1. References:
   - For sections A-A thru C-C, see sheet E-19.
   - For lighting work in (E) Vault #2, see E-20.
   - For (E) TB-01 schedule, see sheet E-22.
   - For (E) PB-02 and (E) PB-05 schedule, see sheet E-23.
   - For permanent call box conductor use 6/c, #16, 600 V, EPR insulation.

CONTRACT NO. 04-0120R4

CONTRACT CHANGE ORDER NO. 68

SHEET 22 OF 42

SIGNAL AND LIGHTING (STAGE 2)
LOWER SOUTH SIDE OF VIADUCT & SITE ELECTRICAL WORK

SCALE: 1:250

E-7

THIS PLAN ACCURATE FOR ELECTRICAL WORK ONLY

FOR REDUCED PLANS ORIGINAL SCALE IS IN MILLIMETERS 0 20 40 60 80

DGN FILE => E-7.dgn
USERNAME => hwong

CU 04251 | EA 0120P1

LAST REVISION 00-00-00 | DATE PLOTTED => 09-FEB-2007 | TIME PLOTTED => 03:15

STATE OF CALIFORNIA - DEPARTMENT OF TRANSPORTATION — Caltrans

DESIGN OVERSIGHT — Behzad Golemohammadi

DATE	REVISED BY	DATE REVISED
BJ	CL	36

CALCULATED/DESIGNED BY

CHECKED BY

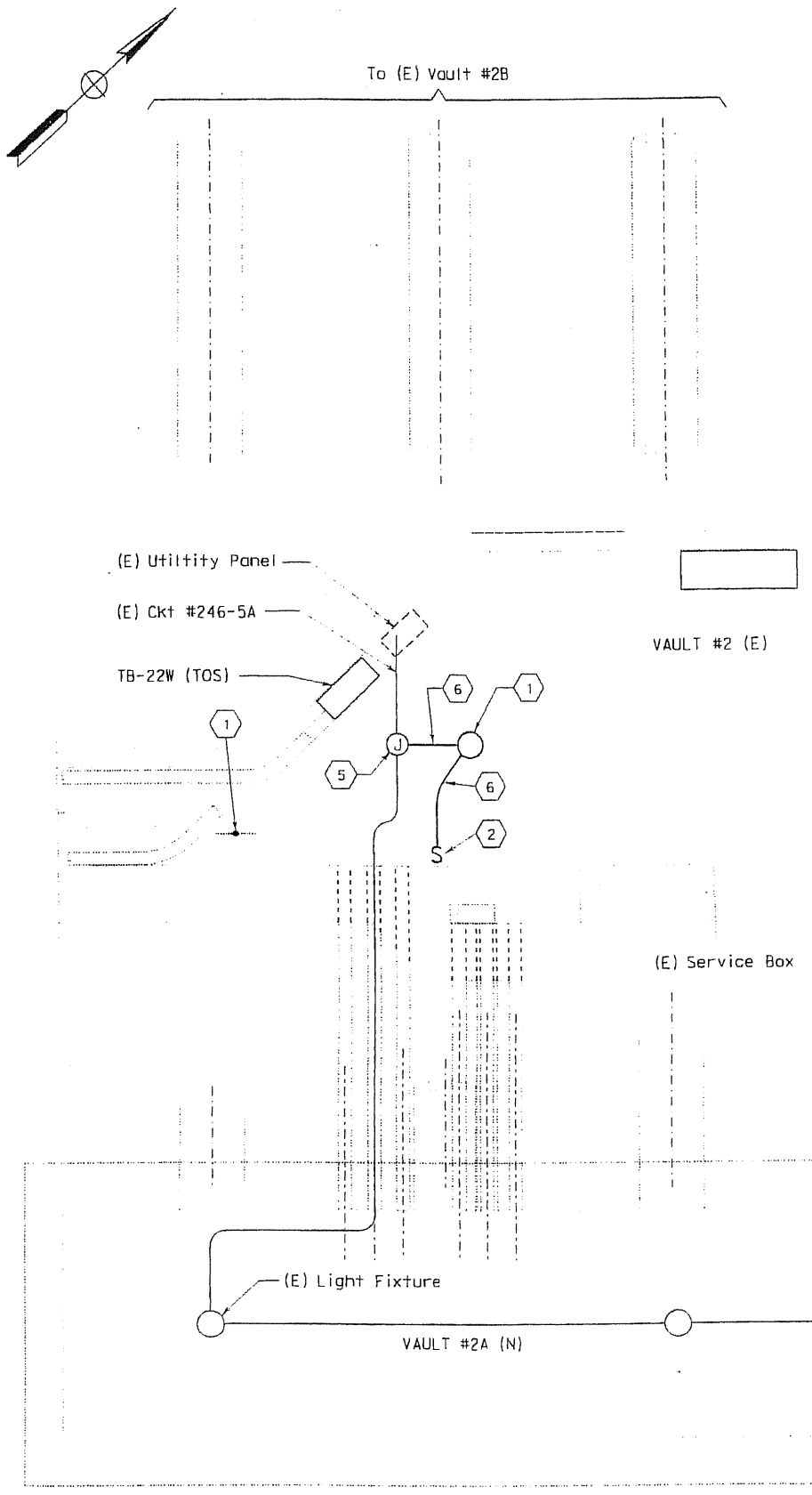

PLAN
SCALE: 1:25

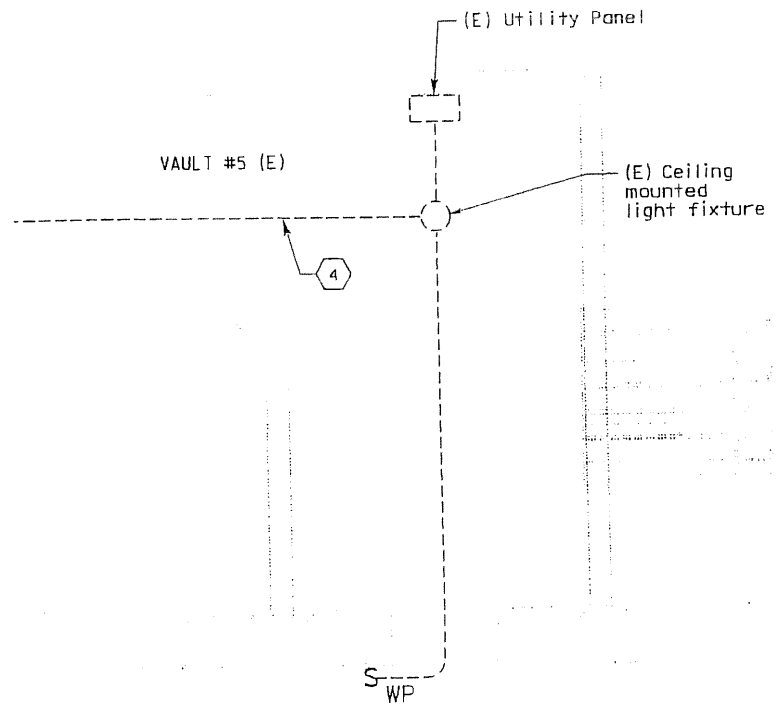

SHEET NOTES:

1. Install new surface mounted enclosed gasketed light fixtures to match existing.
2. Install new surface mounted weather proof light switch
3. Install 27mm conduit with 2 #12+G.
4. Remove and scrap (E) conductors in existing conduit.
5. Intercept (E) conduit and extend to new light fixture. Provide blank cover plate.
6. Install new type 1 conduit with 2 #12+G. Provide conduit support per N.E.C.

(E) VAULT #2 & #5 LIGHTING PLAN (STAGE 2)
YBI VIADUCT REPLACEMENT / WEST TIE IN
SCALE: 1:25

E-8

DIST	COUNTY	ROUTE	KILOMETER POST TOTAL PROJECT	SHEET NO	TOTAL SHEETS
04					

Caltrans Metric

Carol Light — REGISTERED ELECTRICAL ENGINEER — 1/16/07 DATE

PLANS APPROVAL DATE

REGISTERED PROFESSIONAL ENGINEER — CAROL LIGHT — No. 10145 — Exp. 09/30/07 — ELECTRICAL — STATE OF CALIFORNIA

REGISTERED PROFESSIONAL ENGINEER — RAFAEL ALCIDES RAVELO — C68941 — EXP. 12/31/07 — CIVIL — STATE OF CALIFORNIA

PARSONS BRINCKERHOFF QUADE & DOUGLAS, INC.
303 Second St., Suite 700N
San Francisco, CA 94107-1317

SILVERMAN & LIGHT
1201 PARK AVENUE - SUITE 100
EMERYVILLE, CA 94608-3632

The State of California or its officers or agents shall not be responsible for the accuracy or completeness of electronic copies of this plan sheet.

Caltrans now has a web site! To get to the web site, go to http://www.dot.ca.gov

CONTRACT NO. 04-0120R4

CONTRACT CHANGE ORDER NO. 68

SHEET 23 OF 42

DESIGN OVERSIGHT	CALCULATED/ DESIGNED BY	DATE	REVISED BY
Behzad Golemohammadi	CHECKED BY	DATE REVISED	
	BJ	CL	

STATE OF CALIFORNIA - DEPARTMENT OF TRANSPORTATION
Caltrans

THIS PLAN ACCURATE FOR ELECTRICAL WORK ONLY

ALL DIMENSIONS ARE IN METERS UNLESS OTHERWISE SHOWN

FOR REDUCED PLANS ORIGINAL SCALE IS IN MILLIMETERS 0 20 40 60 80

DGN FILE => E-8.dgn
USERNAME => hwong

CU 04251

EA 0120P1

LAST REVISION 00-00-00

DATE PLOTTED => 09-FEB-2007
TIME PLOTTED => 03:15

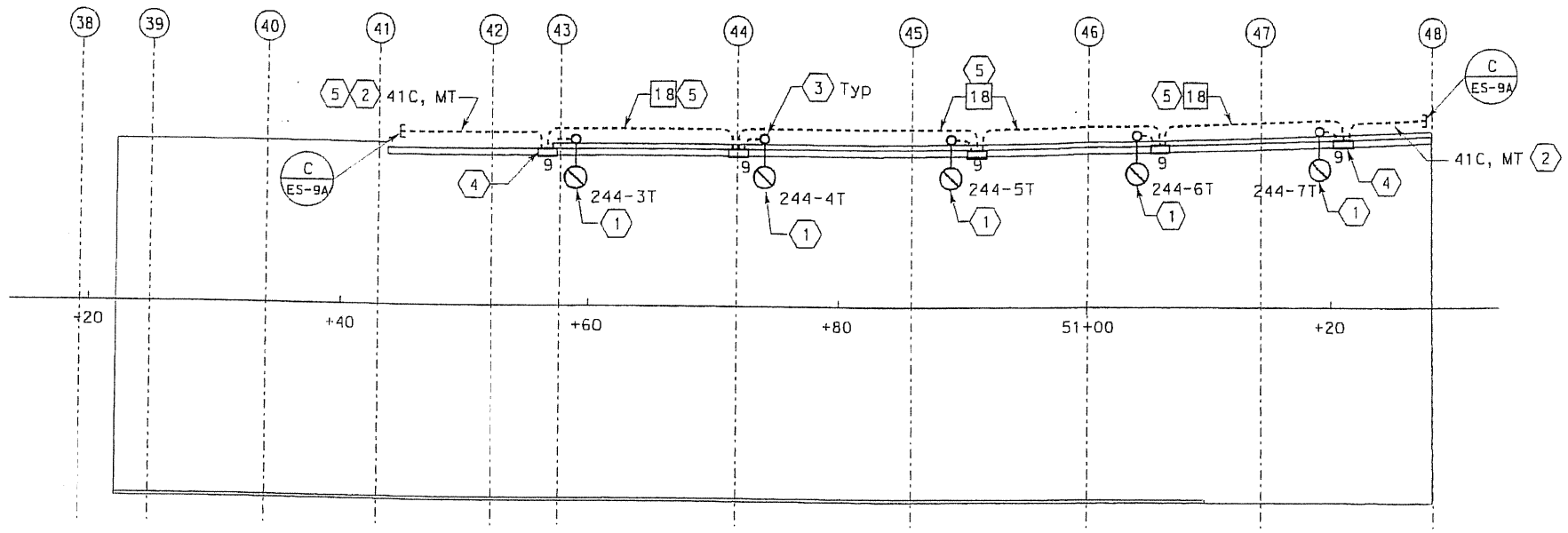

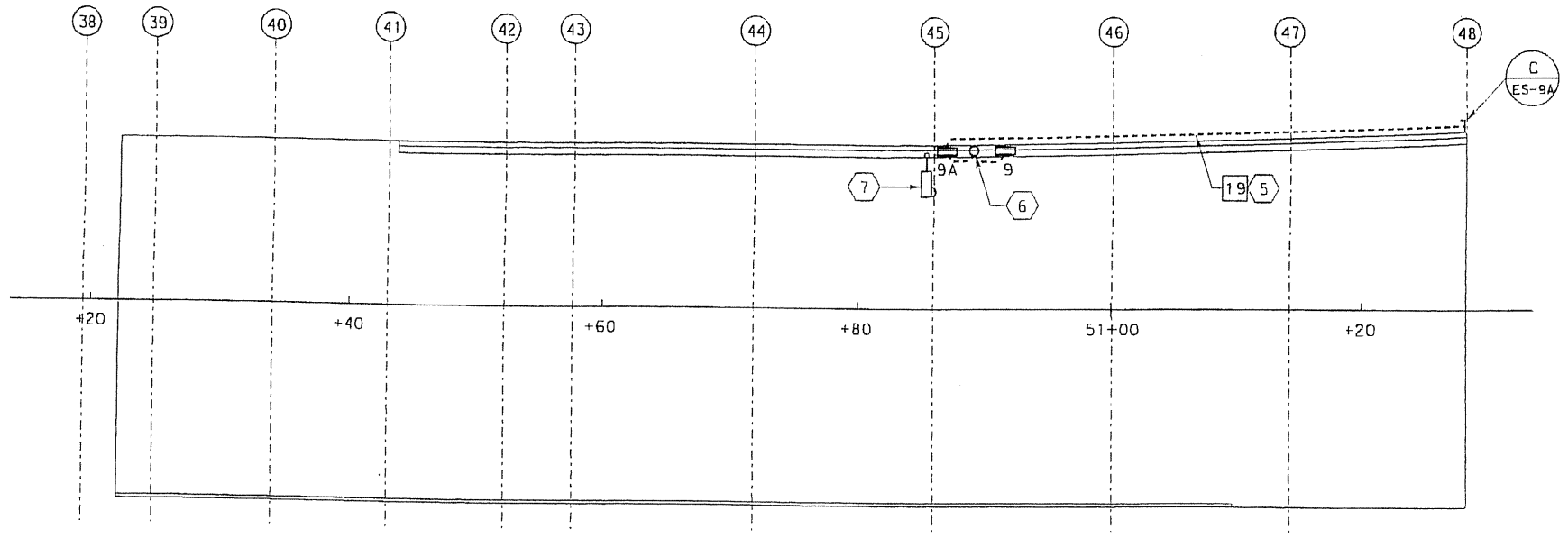

Caltrans Metric

REGISTERED PROFESSIONAL ENGINEER
RAFAEL ALCIDES RAVELO
C68941
EXP. 12/31/07
CIVIL
STATE OF CALIFORNIA

DIST	COUNTY	ROUTE	KILOMETER POST TOTAL PROJECT	SHEET No	TOTAL SHEETS
04					

Carol Light — REGISTERED ELECTRICAL ENGINEER — 1/18/07 DATE

PLANS APPROVAL DATE

REGISTERED PROFESSIONAL ENGINEER — CAROL I LIGHT — No. 10145 — Exp. 09/30/07 ELECTRICAL — STATE OF CALIFORNIA

PARSONS BRINCKERHOFF QUADE & DOUGLAS, INC.
303 Second St., Suite 700N
San Francisco, CA 94107-1317

SILVERMAN & LIGHT
1201 PARK AVENUE - SUITE 100
EMERYVILLE, CA 94608-3632

The State of California or its officers or agents shall not be responsible for the accuracy or completeness of electronic copies of this plan sheet.

Caltrans now has a web site! To get to the web site, go to http://www.dot.ca.gov

SHEET NOTES

1. Install standard luminaire type 21 in permanent light pole location at this stage. See detail on sheet E-18 for more information.
2. Install two (2) 41mm conduit routed inside the permanent concrete barrier.
3. Two (2) 27C,conduit stub up with insulated bushing from pull box no.9, see detail on sheet E-18.
4. Provide enough cable length for splicing and coil inside pull box.
5. Route conduit inside concrete barrier. See detail on sheet E-18.
6. Location of conduit stub-ups for permanent call box. See detail on E-18.
7. Temporarily nstall the relocated call box #138 on the permanent concrete barrier. Call box will be wired and connected during stage 4 construction.

NOTES

1. References:

   -For conduit routing details inside concrete barrier, see sheet E-17.

   -For permanent lighting conductor use 3/c+gnd #6, 600 V, EPR insulaton.

CONTRACT NO. 04-0120R4

CONTRACT CHANGE ORDER NO. 68

SHEET 24 OF 42

NEW CIP UPPER DECK ELECTRICAL WORK (STAGE 3)

YBI VIADUCT REPLACEMENT / WEST TIE IN

SCALE: 1:250

E-9

THIS PLAN ACCURATE FOR ELECTRICAL WORK ONLY

FOR REDUCED PLANS ORIGINAL SCALE IS IN MILLIMETERS 0 20 40 60 80

DGN FILE =>E-9.dgn
USERNAME => hwong

CU 04251

EA 0120P1

DATE	REVISED BY	DATE REVISED
CALCULATED/ DESIGNED BY	BJ	
CHECKED BY	CL	

DESIGN OVERSIGHT — Behzad Golemohammadi

STATE OF CALIFORNIA - DEPARTMENT OF TRANSPORTATION — Caltrans

LAST REVISION 00-00-00

DATE PLOTTED => 09-FEB-2007
TIME PLOTTED => 03:16

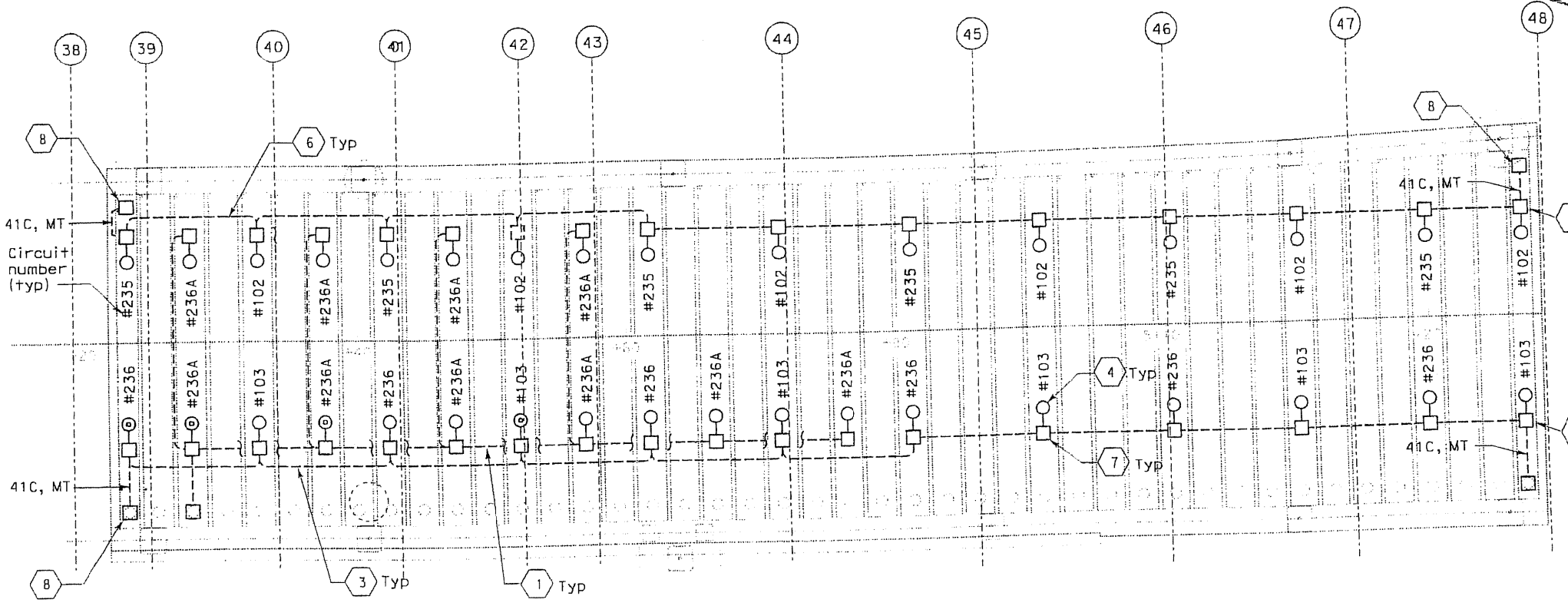

SHEET NOTES:

1. Install new 41mm conduit with 3 #6+G (Ckt #236A).
2. New no.7 pull box with fused splice connectors. See Caltrans standard ES-9E.
3. Install new 41mm conduit with 6 #6+G (Ckt #103, #236).
4. Install flush mounted soffit luminaire for 200 watts metal halide 480 V, housing only. Lamp will be installed during stage 4 construction See Caltrans Standard ES-9E for pull box #7 for more informaton and see sheet E-18 for soffit lighting installation. Provide protection to lens and fixtures during construction.
5. Provide enough cable length and coil cable inside box for splicing at that end of stage 4.
6. Install new 41mm conduit with 6 #6+G (Ckt #102, #235).
7. Install new No. 7 flush mounted ceiling pull box with fused splice connector.
8. Install new flush mounted ceiling splice box with 305 (L) x 305 (W) x 152 (D) minimum dimension.

REGISTERED PROFESSIONAL ENGINEER
RAFAEL ALCIDES RAVELO
C68941
EXP. 12/31/07
CIVIL
STATE OF CALIFORNIA

Caltrans Metric

DIST	COUNTY	ROUTE	TOTAL PROJECT	NO	SHEETS
04					

Carol Light — REGISTERED ELECTRICAL ENGINEER — 1/18/07 DATE

REGISTERED PROFESSIONAL ENGINEER
CAROL LIGHT
No. 10145
Exp. 09/30/07
ELECTRICAL
STATE OF CALIFORNIA

PLANS APPROVAL DATE

PARSONS BRINCKERHOFF QUADE & DOUGLAS, INC.
303 Second St., Suite 700N
San Francisco, CA 94107-1317

SILVERMAN & LIGHT
1201 PARK AVENUE - SUITE 100
EMERYVILLE, CA 94608-3632

The State of California or its officers or agents shall not be responsible for the accuracy or completeness of electronic copies of this plan shed.

Caltrans now has a web site! To get to the web site, go to http://www.dot.ca.gov

CONTRACT NO. 04-0120R4

CONTRACT CHANGE ORDER NO. 68

SHEET 25 OF 42

NEW CIP BOX LOWER DECK ELECTRICAL WORK (STAGE 3)

NYBI VIADUCT REPLACEMENT / WEST TIE IN

SCALE: 1:200

E-10

DESIGN OVERSIGHT	CALCULATED/ DESIGNED BY	BJ	DATE	REVISED BY
Behzad Golemohammadi	CHECKED BY	CL		DATE REVISED

STATE OF CALIFORNIA - DEPARTMENT OF TRANSPORTATION
Caltrans

THIS PLAN ACCURATE FOR ELECTRICAL WORK ONLY

FOR REDUCED PLANS ORIGINAL SCALE IS IN MILLIMETERS 0 20 40 60 80

DGN FILE => E10.dgn
USERNAME => hwong

CU 04251

EA 0120P1

LAST REVISION 00-00-00
DATE PLOTTED => 09-FEB-2007
TIME PLOTTED => 03:17

DIST	COUNTY	ROUTE	TOTAL PROJECT	NO	SHEETS
04					

Carol Light — 1/18/07
REGISTERED ELECTRICAL ENGINEER — DATE

CAROL LIGHT No. 10145 Exp. 09/30/07 ELECTRICAL — REGISTERED PROFESSIONAL ENGINEER — STATE OF CALIFORNIA

PLANS APPROVAL DATE

PARSONS BRINCKERHOFF QUADE & DOUGLAS, INC.
303 Second St., Suite 700N
San Francisco, CA 94107-1317

SILVERMAN & LIGHT
1201 PARK AVENUE - SUITE 100
EMERYVILLE, CA 94608-3632

The State of California or its officers or agents shall not be responsible for the accuracy or completeness of electronic copies of this plan sheet.

Caltrans now has a web site! To get to the web site, go to http://www.dot.ca.gov

REGISTERED PROFESSIONAL ENGINEER — RAFAEL ALCIDES RAVELO — C68941 — EXP 12/31/07 — CIVIL — STATE OF CALIFORNIA

Caltrans Metric

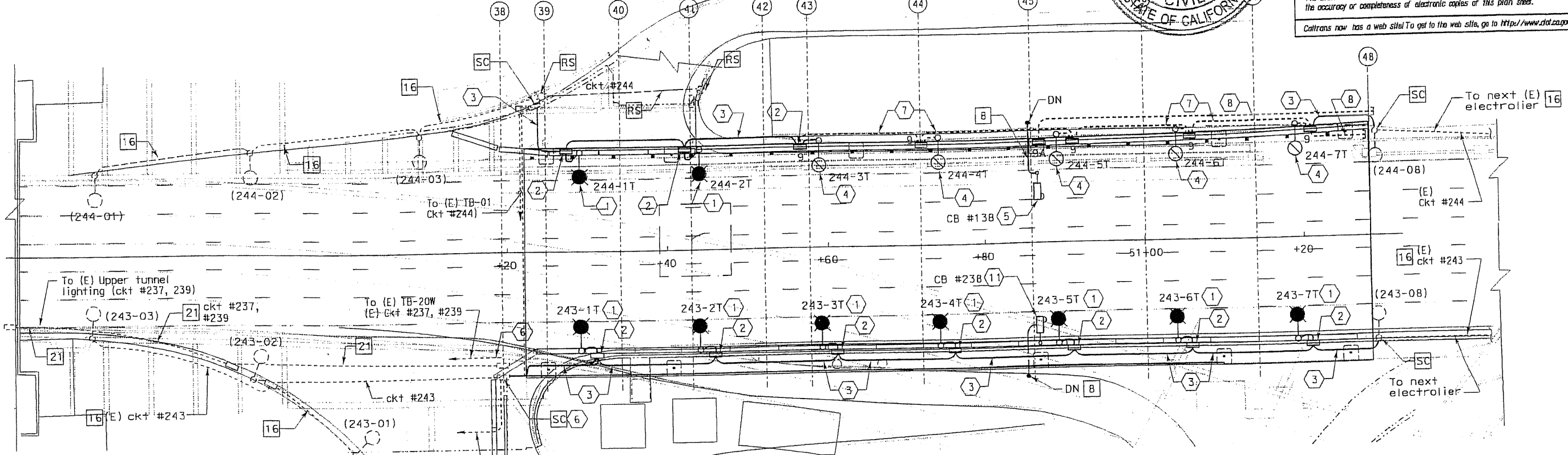

CONTRACT NO. 04-0120R4

CONTRACT CHANGE ORDER NO. 68

SHEET 26 OF 42

NOTES

1. References:
   - for 480 V roadway lighting wiring diagram, see sheet E-20.
   - For terminal and pull boxes connection diagrams, see sheet E-21 thru E-25.
   - For permanent call box conductor, use 6/c, #16, 600 V, EPR insulation.

SHEET NOTES

(1) Install standard type 21 with 300W HPS with integral ballast on K-rail. Put into operation when directedby the engineer. Provide electroliers anchor bolts per detail on E-1a. Install fused splice connectors in adjacent pul box.

(2) Install Nema 3R splice box 305(L)x305(W)x152(D). Fasten box on K-rail with concrete expansion bolt and hex head cap screws.

(3) Install new armored cable with 3 #6+G for temporary lighting circuit on outside face of K-rail. Provide cable suppor and cable connector (size as required).

(4) Standard type 21 with 300W HPS and integral ballast installed and wired during stage 3 construction.

(5) Call box #138 was installed during stage 3 construction. Provide tempoary flexible conduit with 3 #8, 1-6 #16 conductor cable. Route cables down to lower deck call boxes. Put into operation when directed by the engineer until permanent call box are installed.

(6) (E) Pull box installed during stage 1 construction.

(7) 41mm conduit with 3 #6+G. (480V, Lighting) in concrete barrier installed during stage 2 (CIP box construction).

(8) Empty conduit in concrete barrier. Installed during stage 3. See E-9 for more information.

(9) Intercept (E) conduit ckt #243 and extend to (E) vault #2A. Provide new cable from (E) pull box to (E) TB-20E located in (E) MH-02 via (E) vault #2A and 2B. Route conduit below concrete tunnel floor along (E) retaining wall, see 600 V cable block diagram sheet E-16. Provide conduit support per N.E.C.

(10) Existing TB-20W is located in (E) vault #2A. Existing TB-01 is located on the north retaining wall near Bent #38.

(11) Temporary install relocated call box #238 on K-Rail. Provide tempoary flexible conduit with 3 #8, 1-6 #16 conductor cable. Route cables down to lower deck call boxes. Put into operation when directed by the engineer until permanent call box are installed.

SIGNAL AND LIGHTING (STAGE 4)
YBI VIADUCT REPLACEMENT / WEST TIE IN

SCALE: 1:250

E-11

STATE OF CALIFORNIA - DEPARTMENT OF TRANSPORTATION — Caltrans

DESIGN OVERSIGHT — Behzad Golemohammadi

	DATE	REVISED BY	DATE REVISED
CALCULATED/ DESIGNED BY	BJ		
CHECKED BY	CL		

LAST REVISION 00-00-00 — DATE PLOTTED => 09-FEB-2007 — TIME PLOTTED => 03:06

THIS PLAN ACCURATE FOR ELECTRICAL WORK ONLY

FOR REDUCED PLANS ORIGINAL SCALE IS IN MILLIMETERS — 0 20 40 60 80

DGN FILE => E-11.dgn
USERNAME => nwong

CU 04251 — EA 0120P1

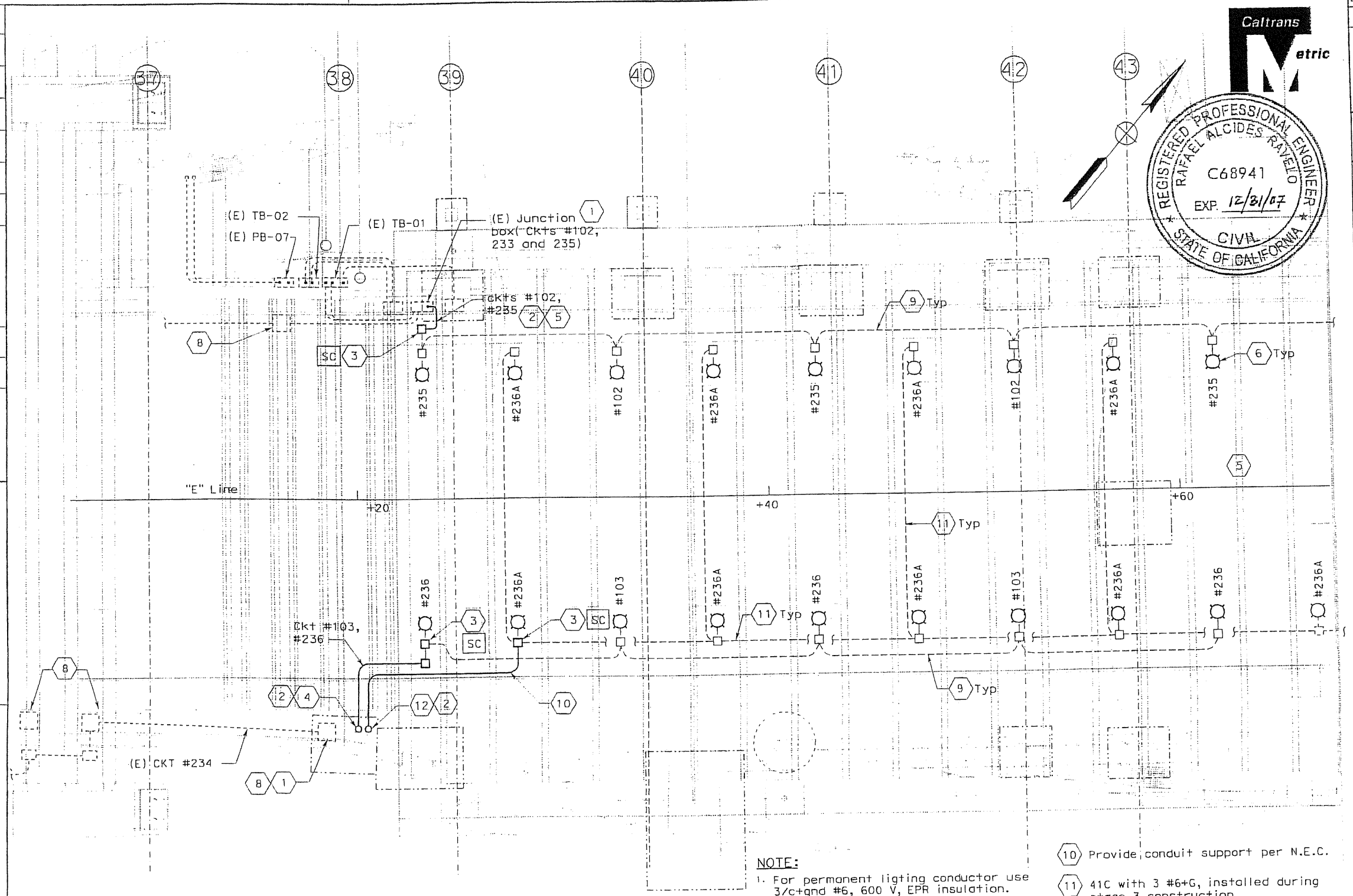

NOTE:

1. For permanent ligting conductor use 3/c+gnd #6, 600 V, EPR insulation.

(10) Provide conduit support per N.E.C.

(11) 41C with 3 #6+G, installed during stage 3 construction.

(12) Use the same procedure as in sheet note #4 except for new Ckt #236A.

SHEET NOTES:

(1) Contractor to verify in field and locate existing splice box/junction and verify existing circuits prior to cutting and splicing.

(2) Contractor to provide necessary conduit expansion/deflection fitting in all conduit crossing the structure expansion joint. See Standard Detail ES-9B.

(3) Install new Nema type 4 extension ring below the new flush mounted splice box to accomodate splicing of new cables.

(4) Route new permanent circuit #103, and #236 from (E) MH-2 to (E) Vault #2A via (E) duct banks and (E) utility tunnel. Locate (E) Ckts #103 and #236 inside (E) TB-20E and terminate each circuits in Nema type 4 slice box, with a minimum dimensions of 305 (L) x 305 (W) x 152 (D). Install spice box in (E) Vault #2A. From each splice box, install new 41C with 6 #6+G, 600 V to new extension ring and splice new cables inside the spice box Ckts #103 and #236.

(5) From (E) juncton box, install new 41C with 6 #6+G, 600 V to new extension ring and splice new cable feeder inside the splice box Ckts #102. and #235.

(6) Install new 200 W metal halide lamp at the end of stage 4. Construction or as directed by engineer for exact quantity of lamp, see sheet E-10.

(7) Route new circuit #236A from (E) LVCC-C to (E) vault #2A vio (E) MH-2 (E) duct bank and utility tunnel. Terminate circuit in Nema type 4 splice box. Locate splice box in (E) Vault #2A.

(8) Existing wall mounted light fixture. Verify in field exact location.

(9) 41mm with 6 #6+G, installed during stage 3.

CONTRACT NO. 04-0120R4

CONTRACT CHANGE ORDER NO. 68

SHEET 27 OF 42

LOWER DECK ELECTRICAL WORK (STAGE 4)
YBI VIADUCT REPLACEMENT / WEST TIE IN

SCALE: 1:100

E-12

DIST	COUNTY	ROUTE	KILOMETER POST TOTAL PROJECT	SHEET NO	TOTAL SHEETS
04					

Carol Light — REGISTERED ELECTRICAL ENGINEER — 1/18/07 DATE

CAROL LIGHT No. 10145 Exp. 09/30/07 ELECTRICAL — REGISTERED PROFESSIONAL ENGINEER — STATE OF CALIFORNIA

PLANS APPROVAL DATE

PARSONS BRINCKERHOFF QUADE & DOUGLAS, INC.
303 Second St., Suite 700N
San Francisco, CA 94107-1317

SILVERMAN & LIGHT
1201 PARK AVENUE - SUITE 100
EMERYVILLE, CA 94608-3632

The State of California or its officers or agents shall not be responsible for the accuracy or completeness of electronic copies of this plan sheet.

Caltrans now has a web site! To get to the web site, go to http://www.dot.ca.gov

REGISTERED PROFESSIONAL ENGINEER — RAFAEL ALCIDES RAYELO — C68941 EXP. 12/31/07 CIVIL — STATE OF CALIFORNIA

Caltrans Metric

DESIGN OVERSIGHT: Behzad Golamohammadi

CALCULATED/DESIGNED BY: BJ

CHECKED BY: CL

DATE	REVISED BY	DATE REVISED

STATE OF CALIFORNIA - DEPARTMENT OF TRANSPORTATION — Caltrans

THIS PLAN ACCURATE FOR ELECTRICAL WORK ONLY

FOR REDUCED PLANS ORIGINAL SCALE IS IN MILLIMETERS — 0 20 40 60 80

DGN FILE => E-12.dgn
USERNAME => hwong

CU 04251

EA 0120P1

LAST REVISION 00-00-00

DATE PLOTTED => 09-FEB-2007
TIME PLOTTED => 03:06

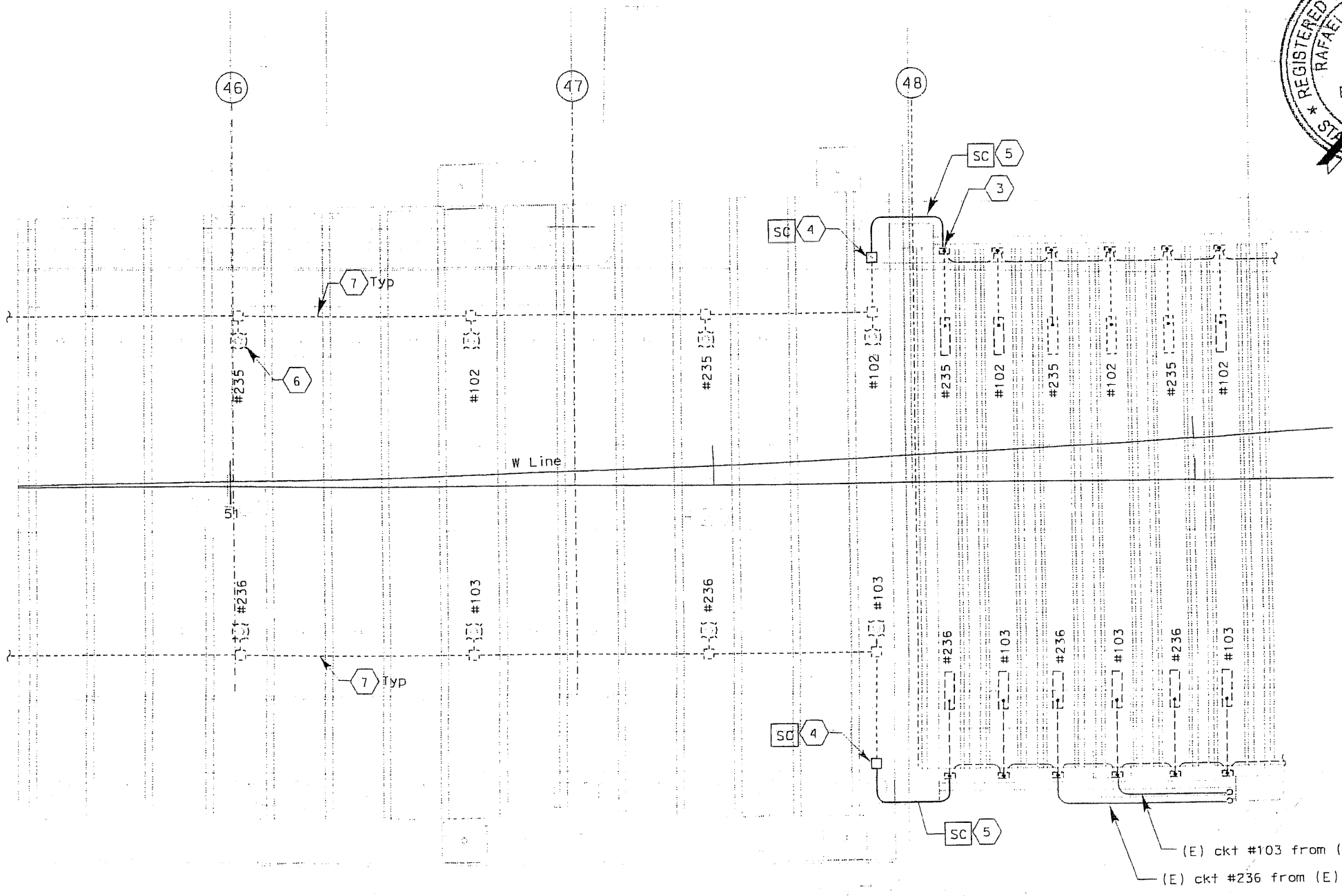

SHEET NOTES:

1. (E) PB-05 is located in (E) Vault #5.
2. Existing CKT's #103 and #236 are routed from (E) Vault #5 out to (E) splice box on inside face of girder.
3. (E) Splice box mounted on inside face of girder.
4. Install new Nema 4 extension ring on flush mounted splice box to accommodate splicing of cables.
5. Contractor to provide conduit support per N.E.C. and provide expansion/deflection fitting in all conduit crossing the structure expansion joint. See standard detail ES-9B.
6. Install new 200 watts metal hallide lamp in soffit luminaire housing. (Housing and ballast installed during stage 3.
7. 41c, with 6 #6+G, installed during phase 3.

NOTE:

1. For permanent lighting conductor use 3/c+gnd #6, 600 V, EPR insulation.

CONTRACT NO. 04-0120R4

CONTRACT CHANGE ORDER NO. 68

SHEET 28 OF 42

LOWER DECK ELECTRICAL WORK (STAGE 4)

YBI VIADUCT REPLACEMENT / WEST TIE IN

SCALE: 1:100

E-13

DIST	COUNTY	ROUTE	KILOMETER POST TOTAL PROJECT	SHEET NO	TOTAL SHEETS
04					

Caltrans Metric

Carol Light — REGISTERED ELECTRICAL ENGINEER — 1/18/07 DATE

PLANS APPROVAL DATE

REGISTERED PROFESSIONAL ENGINEER — CAROL LIGHT — No. 10145 — Exp. 09/30/07 — ELECTRICAL — STATE OF CALIFORNIA

REGISTERED PROFESSIONAL ENGINEER — RAFAEL ALCIDES RAMELO — C68941 — EXP. 12/31/07 — CIVIL — STATE OF CALIFORNIA

PARSONS BRINCKERHOFF QUADE & DOUGLAS, INC.
303 Second St., Suite 700N
San Francisco, CA 94107-1317

SILVERMAN & LIGHT
1201 PARK AVENUE - SUITE 100
EMERYVILLE, CA 94608-3632

The State of California or its officers or agents shall not be responsible for the accuracy or completeness of electronic copies of this plan sheet.

Caltrans now has a web site! To get to the web site, go to http://www.dot.ca.gov

STATE OF CALIFORNIA - DEPARTMENT OF TRANSPORTATION — Caltrans

DESIGN OVERSIGHT — Behzad Golemohammadi

CALCULATED/ DESIGNED BY	DATE	REVISED BY	DATE REVISED
BJ			
CL			
CHECKED BY			

DATE PLOTTED => 09-FEB-2007
TIME PLOTTED => 03:07

LAST REVISION 00-00-00

THIS PLAN ACCURATE FOR ELECTRICAL WORK ONLY

FOR REDUCED PLANS ORIGINAL SCALE IS IN MILLIMETERS 0 20 40 60 80

DGN FILE => E-13.dgn
USERNAME => hwong

CU 04251

EA 0120P1

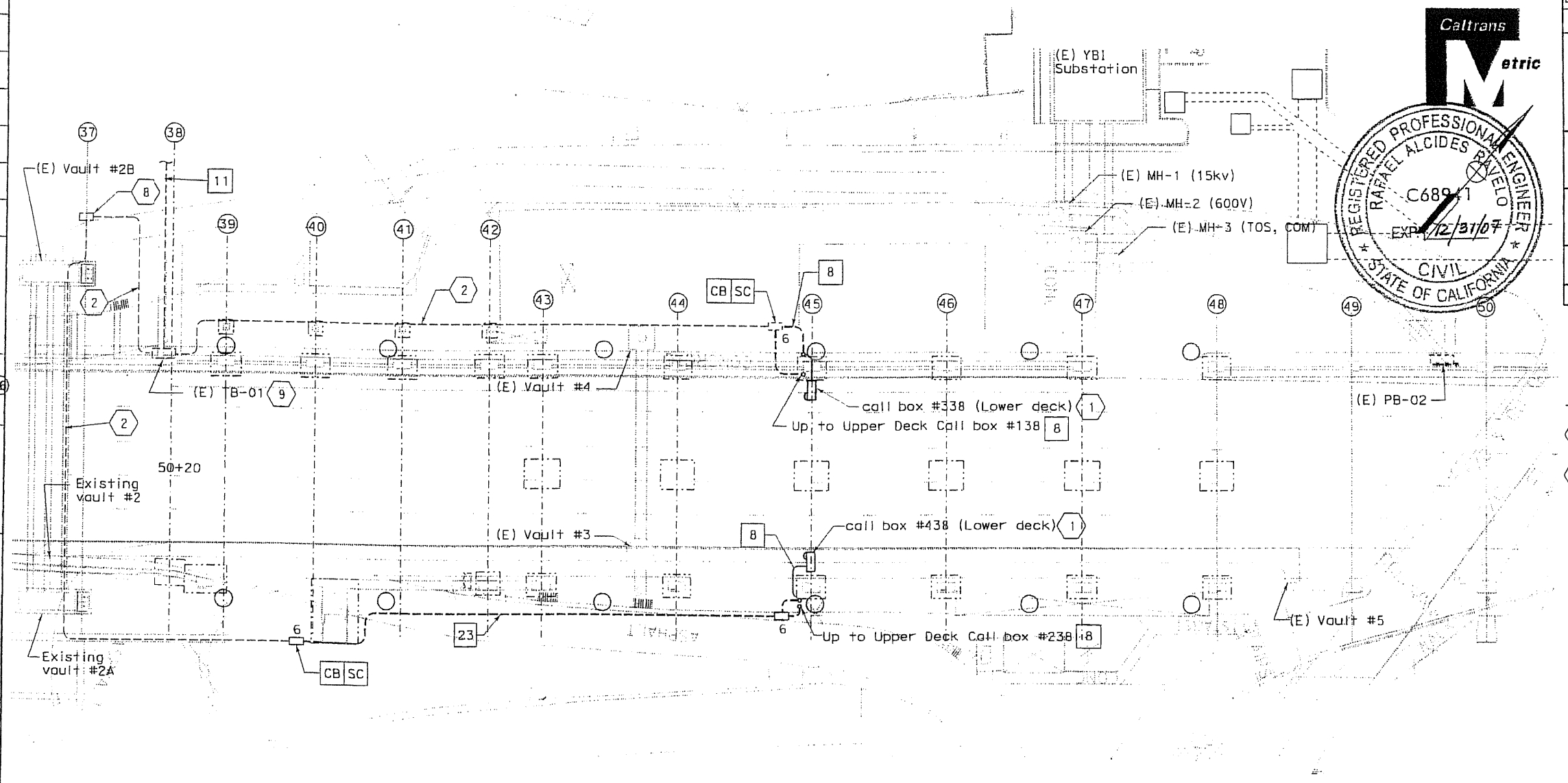

SHEET NOTES:

1. Install relocated call boxes at this location or as dircted by engineer.
2. 53mm conduit with 3 #8 and two (2) 6 #16 conductor cable installed during stage 2 construction.

NOTES:

1. References:
   - For (E) TB-01 schedule, see sheet E-22.
   - For permanent call box conductor use 6/c, #16, 600 V, EPR insulation.
   - For call box wiring/block diagrams, see sheet E-17.

CONTRACT NO. 04-0120R4

CONTRACT CHANGE ORDER NO. 68

SHEET 29 OF 42

CALL BOX ELECTRICAL WORK (STAGE 4)
YBI VIADUCT REPLACEMENT / WEST TIE IN

SCALE: 1:250

E-14

THIS PLAN ACCURATE FOR ELECTRICAL WORK ONLY

FOR REDUCED PLANS ORIGINAL SCALE IS IN MILLIMETERS 0 20 40 60 80

DGN FILE =>E-14.dgn
USERNAME =>hwang

CU 04251

EA 0120P1

DIST	COUNTY	ROUTE	KILOMETER POST TOTAL PROJECT	SHEET No	TOTAL SHEETS
04					

Caltrans Metric

Carol Light — REGISTERED ELECTRICAL ENGINEER — 1/18/07 DATE

CAROL LIGHT No 10145 Exp 09/30/07 ELECTRICAL — REGISTERED PROFESSIONAL ENGINEER — STATE OF CALIFORNIA

PLANS APPROVAL DATE

PARSONS BRINCKERHOFF QUADE & DOUGLAS, INC.
303 Second St., Suite 700N
San Francisco, CA 94107-1317

SILVERMAN & LIGHT
1201 PARK AVENUE - SUITE 100
EMERYVILLE, CA 94608-3632

REGISTERED PROFESSIONAL ENGINEER — RAFAEL ALCIDES PINELO — C68911 — EXP 12/31/07 — CIVIL — STATE OF CALIFORNIA

The State of California or its officers or agents shall not be responsible for the accuracy or completeness of electronic copies of this plan sheet.

Caltrans now has a web site! To get to the web site, go to http://www.dot.ca.gov

DATE	BY	REVISED	DATE REVISED

CALCULATED/DESIGNED BY: BJ
CHECKED BY: CL

DESIGN OVERSIGHT: Behzad Golamohammadi

STATE OF CALIFORNIA - DEPARTMENT OF TRANSPORTATION
Caltrans

LAST REVISION 00-00-00
DATE PLOTTED => 09-FEB-2007
TIME PLOTTED => 03:08

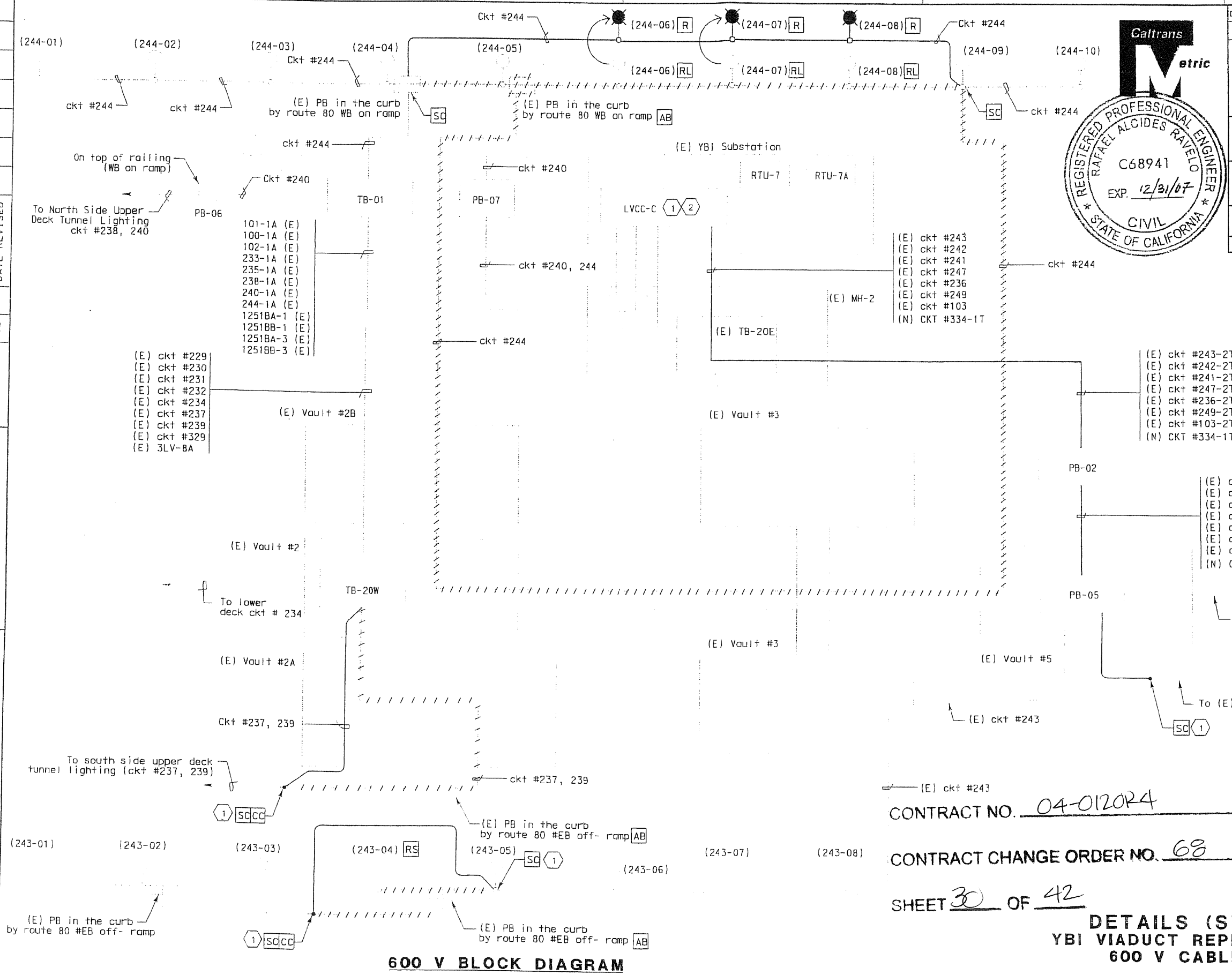

600 V BLOCK DIAGRAM

Caltrans Metric

REGISTERED PROFESSIONAL ENGINEER
RAFAEL ALCIDES RAVELO
C68941
EXP. 12/31/07
CIVIL
STATE OF CALIFORNIA

DIST	COUNTY	ROUTE	KILOMETER POST TOTAL PROJECT	SHEET No	TOTAL SHEETS
04					

Carol Light — 1/18/07
REGISTERED ELECTRICAL ENGINEER — DATE

REGISTERED PROFESSIONAL ENGINEER — CAROL LIGHT — No. 10145 — Exp. 09/30/07 ELECTRICAL — STATE OF CALIFORNIA

PLANS APPROVAL DATE

PARSONS BRINCKERHOFF QUADE & DOUGLAS, INC.
303 Second St., Suite 700N
San Francisco, CA 94107-1317

SILVERMAN & LIGHT
1201 PARK AVENUE - SUITE 100
EMERYVILLE, CA 94608-3632

The State of California or its officers or agents shall not be responsible for the accuracy or completeness of electronic copies of this plan sheet.

Caltrans now has a web site! To get to the web site, go to http://www.dot.ca.gov

SHEET NOTES:

1. Connect to corresponding cables.
2. At (E) LVCC-C, install one new 50A, 2-pole circuit breaker, contactor to match (E).(for circuit #334-1T)

NOTES:

1. Reference:
   - For (E) TB-20E Schedule see E-24.
   - For (E) 480 V LVCC-C Single Line Diagram, see Sheet E-26.

CONTRACT NO. 04-0120R4

CONTRACT CHANGE ORDER NO. 68

SHEET 30 OF 42

DETAILS (STAGES 1 AND 2)
YBI VIADUCT REPLACEMENT/WEST TIE-IN
600 V CABLE BLOCK DIAGRAM

NO SCALE

E-15

DESIGN OVERSIGHT	CALCULATED/ DESIGNED BY	CHECKED BY	BJ	CL	DATE	REVISED BY	DATE REVISED
Behzad Golemohammadi							

STATE OF CALIFORNIA - DEPARTMENT OF TRANSPORTATION
Caltrans

THIS PLAN ACCURATE FOR ELECTRICAL WORK ONLY

FOR REDUCED PLANS ORIGINAL SCALE IS IN MILLIMETERS — 0 20 40 60 80

DGN FILE => E-15.dgn
USERNAME => hwong

CU 04251

EA 0120P1

LAST REVISION 00-00-00
DATE PLOTTED => 09-FEB-2007
TIME PLOTTED => 03:08

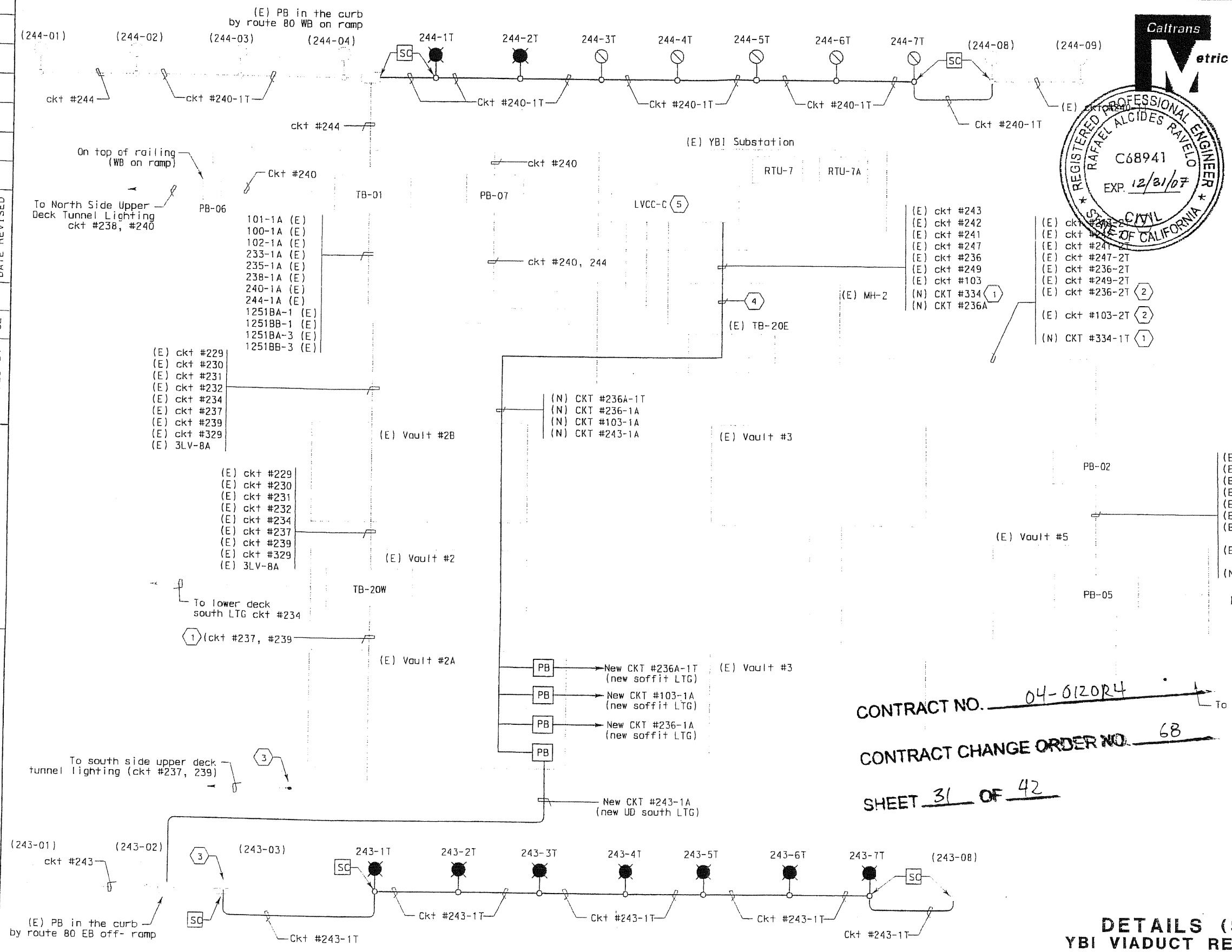

600 V BLOCK DIAGRAM

SHEET NOTES:

1. Installed at the beginning of Stage 2 Construction.
2. Cut and remove temporary cables or circuits when permanent cables or circuits has been installed.
3. Installed during Stage 1 Construction.
4. Install new 3/C+G, #6/600 V, EPR cable form (E) LVCC-C to (E) TB-20E. For Ckt #236A.
5. Install NEW 50A, 3-pole circuit breaker and contactor top match (E) for new (Ckt #236A).

CONTRACT NO. 04-0120R4

CONTRACT CHANGE ORDER NO. 68

SHEET 31 OF 42

NOTES:

1. Reference:
   - For (E) TB-20E Schedule see E-24.
   - For 480 V Roadway Lighting Wiring Digram see Sheet E-20.
   - For (E) 480 V LVCC-C Single Line Diagram, see Sheet E-26.

DETAILS (STAGES 3 AND 4)
YBI VIADUCT REPLACEMENT/WEST TIE-IN
600 V CABLE BLOCK DIAGRAM

NO SCALE

E-16

THIS PLAN ACCURATE FOR ELECTRICAL WORK ONLY

FOR REDUCED PLANS ORIGINAL SCALE IS IN MILLIMETERS 0 20 40 60 80

DGN FILE => E-16.dgn
USERNAME => hwong

CU 04251 | EA 0120P1

DIST	COUNTY	ROUTE	KILOMETER POST TOTAL PROJECT	SHEET NO	TOTAL SHEETS
04					

Carol Light 1/18/07
REGISTERED ELECTRICAL ENGINEER DATE

CAROL LIGHT No. 10145 Exp. 09/30/07 ELECTRICAL
REGISTERED PROFESSIONAL ENGINEER — STATE OF CALIFORNIA

PLANS APPROVAL DATE

REGISTERED PROFESSIONAL ENGINEER — RAFAEL ALCIDES RAVELO — C68941 EXP. 12/31/07 CIVIL — STATE OF CALIFORNIA

PARSONS BRINCKERHOFF QUADE & DOUGLAS, INC.
303 Second St., Suite 700N
San Francisco, CA 94107-1317

SILVERMAN & LIGHT
1201 PARK AVENUE - SUITE 100
EMERYVILLE, CA 94608-3632

The State of California or its officers or agents shall not be responsible for the accuracy or completeness of electronic copies of this plan sheet.

Caltrans now has a web site! To get to the web site, go to http://www.dot.ca.gov

STATE OF CALIFORNIA - DEPARTMENT OF TRANSPORTATION — Caltrans

DESIGN OVERSIGHT — Behzad Golemohammadi

CALCULATED/ DESIGNED BY	CHECKED BY	DATE	REVISED BY	DATE REVISED
BJ	CL			

LAST REVISION 00-00-00
DATE PLOTTED => 09-FEB-2007
TIME PLOTTED => 03:08

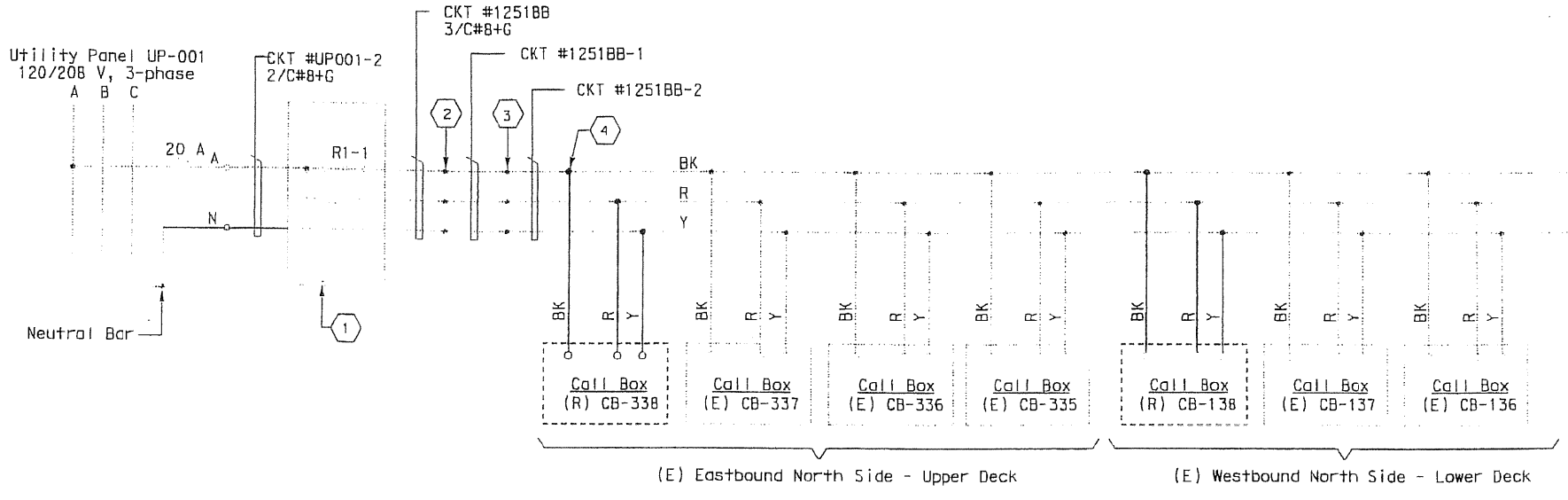

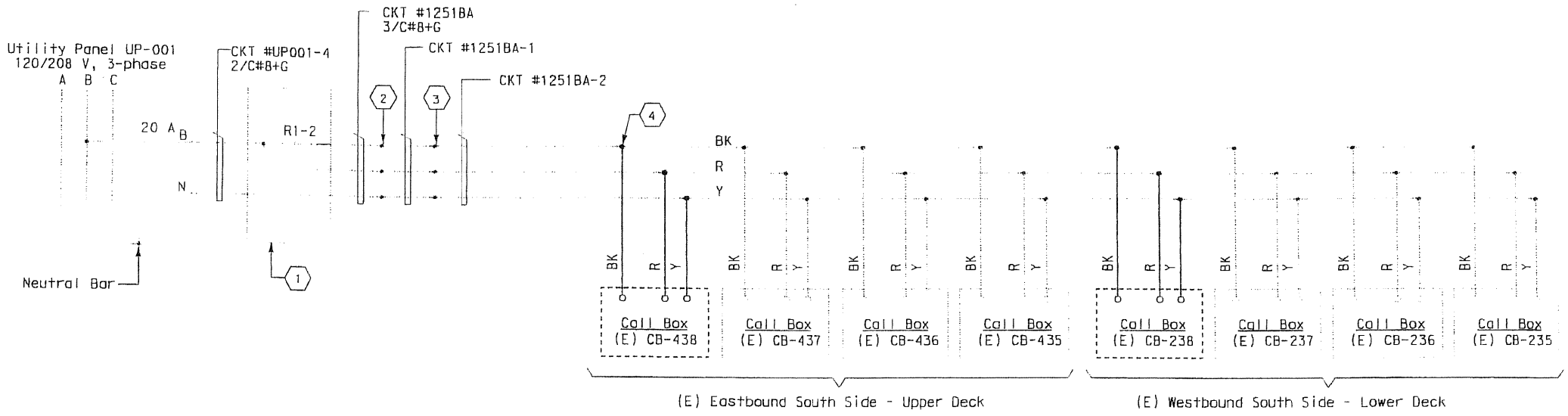

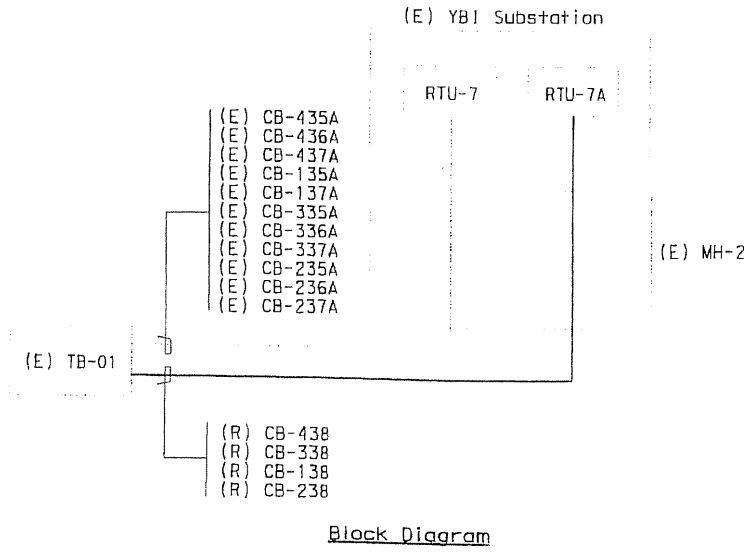

Block Diagram

Caltrans Metric

REGISTERED PROFESSIONAL ENGINEER
RAFAEL ALCIDES RAVELO
C68941
EXP. 12/31/07
CIVIL
STATE OF CALIFORNIA

DIST	COUNTY	ROUTE	KILOMETER POST TOTAL PROJECT	SHEET NO	TOTAL SHEETS
04					

Carol Light — REGISTERED ELECTRICAL ENGINEER — 1/18/07 DATE

REGISTERED PROFESSIONAL ENGINEER — CAROL LIGHT — No. 10145 — Exp. 09/30/07 ELECTRICAL — STATE OF CALIFORNIA

PLANS APPROVAL DATE

PARSONS BRINCKERHOFF QUADE & DOUGLAS, INC.
303 Second St., Suite 700N
San Francisco, CA 94107-1317

SILVERMAN & LIGHT
1201 PARK AVENUE - SUITE 100
EMERYVILLE, CA 94608-3632

The State of California or its officers or agents shall not be responsible for the accuracy or completeness of electronic copies of this plan sheet.

Caltrans now has a web site! To get to the web site, go to http://www.dot.ca.gov

SHEET NOTES:

1. West Span call box relay cabinet is located in the (N) YBI substation. For call box lighting control, see elementary diagram sheet E-38E, of contract #04-0120G4.
2. For RTU #7A connection diagram, see sheet E-242, of contract #04-0120G4.
3. For TB-01 connection diagram, see sheet E-38C, of contract #04-0120G4.
4. Intercept (E) wiring and terminate to call box terminal cabinet.
5. (E) TB-01 is located on the north retaining wall ner Bent #38.

NOTES:

1. To ensure continuous operation, contractor shall check and verify that all existing connections to call boxes are functional.
2. References:
   - For location of existing call boxes, see sheet E-50 of contract #04-0120G4.
   - For UP-001 panel schedule, see sheet E-102, of contract #04-0120G4
   - For 600 V cable block diagram, see sheet E-15 and E-16.

CONTRACT NO. 04-0120R4

CONTRACT CHANGE ORDER NO. 68

SHEET 32 OF 42

DETAILS
YBI VIADUCT REPLACEMENT / WEST TIE IN
CALL BOX WIRING/BLOCK DIAGRAMS

NO SCALE

E-17

DATE	REVISED BY	DATE REVISED
BJ	CL	

CALCULATED/DESIGNED BY: BJ
CHECKED BY: CL

STATE OF CALIFORNIA - DEPARTMENT OF TRANSPORTATION
Caltrans
DESIGN OVERSIGHT
Behzad Golemohammadi

LAST REVISION 00-00-00
DATE PLOTTED => 09-FEB-2007
TIME PLOTTED => 03:09

THIS PLAN ACCURATE FOR ELECTRICAL WORK ONLY

FOR REDUCED PLANS ORIGINAL SCALE IS IN MILLIMETERS 0 20 40 60 80

DGN FILE => E-17.dgn
USERNAME => hwong

CU 04251

EA 0120P1

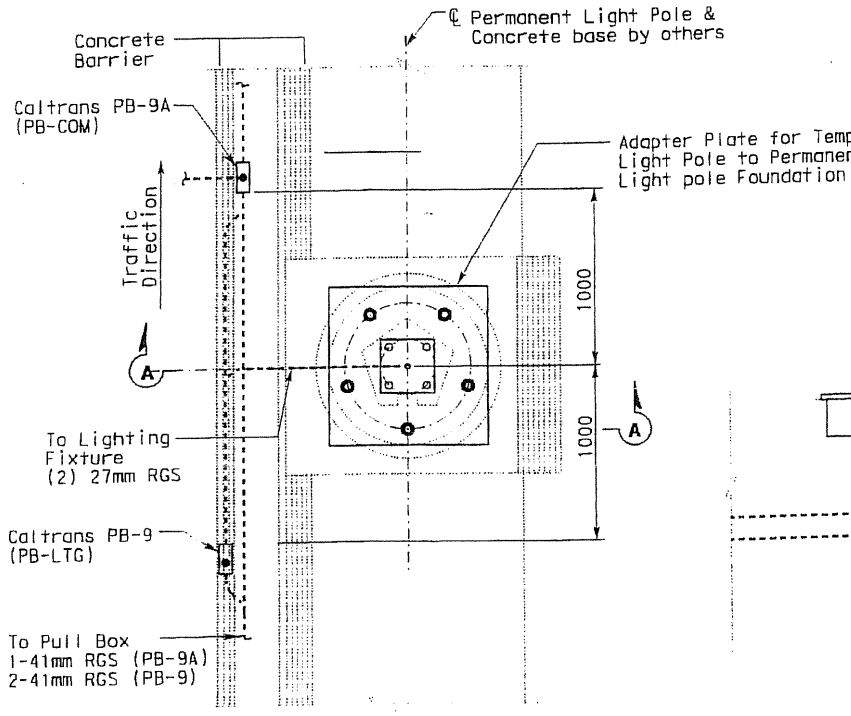

PLAN

CONDUIT STUB UP FOR ROADWAY LIGHTING ON A CONCRETE BASE
NO SCALE

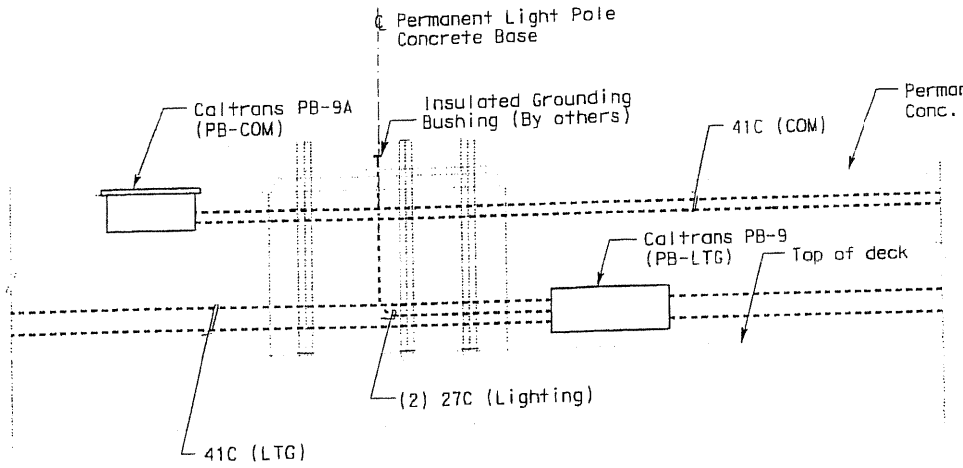

LONGITUDINAL SECTION (LTG)

TYPICAL CONDUIT ROUTING INSIDE CONCRETE BARRIER
NO SCALE

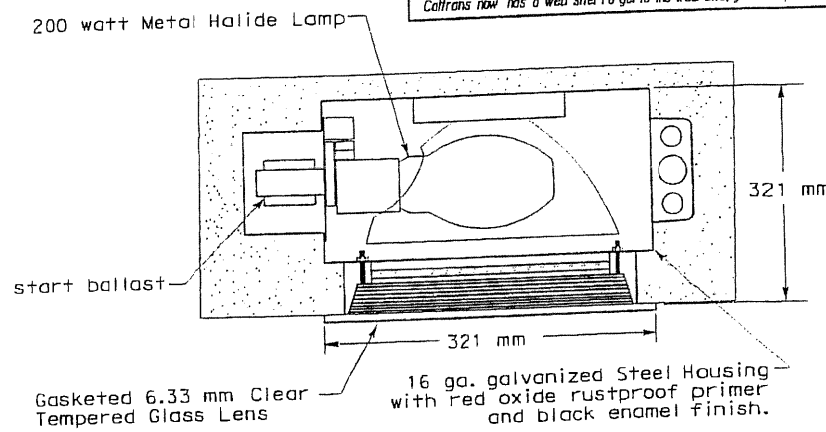

FLUSH SOFFIT LUMINAIRE INSTALLATION

NO SCALE

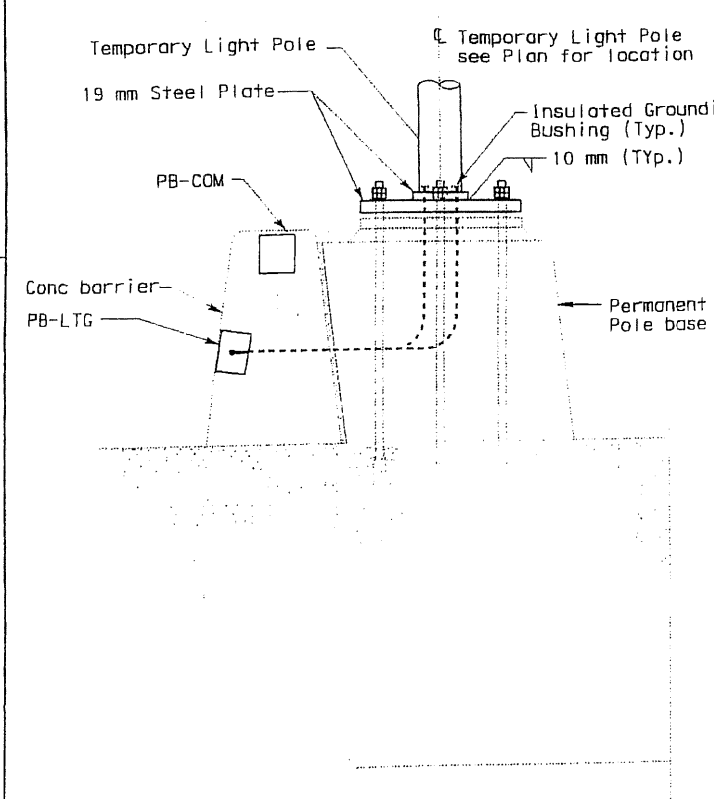

SECTION A-A

NO SCALE

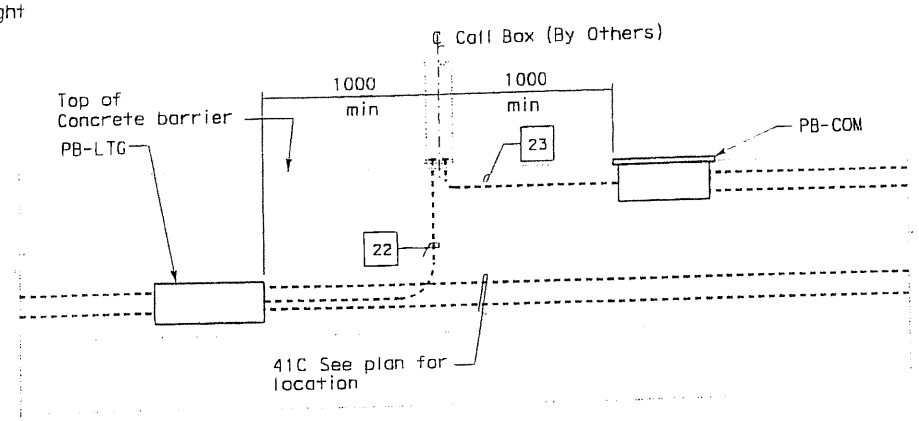

LONGITUDINAL SECTION (CALL BOX)

TYPICAL CONDUIT ROUTING INSIDE CONCRETE BARRIER
NO SCALE

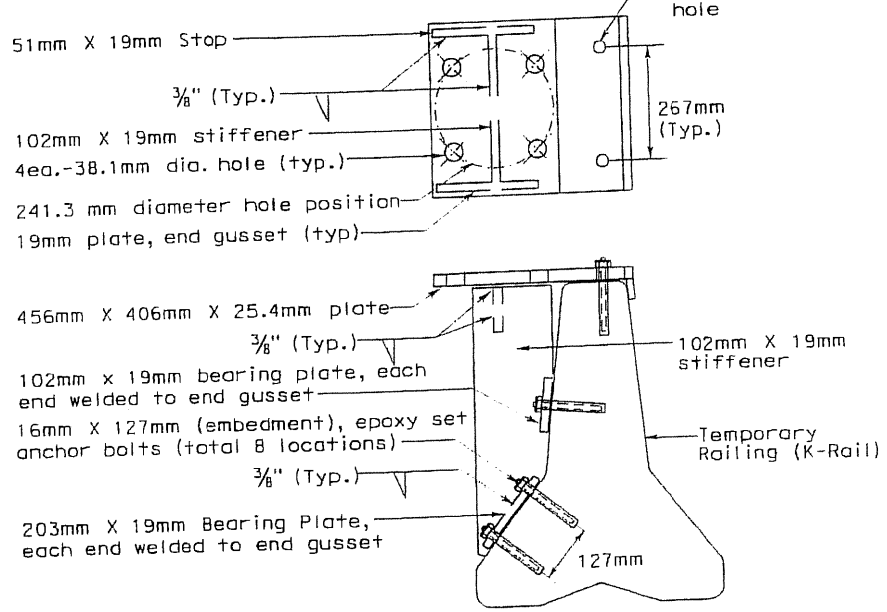

TEMPORARY LIGHT POLE FOUNDATION

NO SCALE

THIS PLAN ACCURATE FOR ELECTRICAL WORK ONLY

FOR REDUCED PLANS ORIGINAL SCALE IS IN MILLIMETERS

0 20 40 60 80

DGN FILE =>E-18.dgn
USERNAME => hwang

DETAILS
YBI VIADUCT REPLACEMENT / WEST TIE IN

NO SCALE

E-18

CONTRACT NO. 04-0120R4

CONTRACT CHANGE ORDER NO. 68

SHEET 33 OF 42

REGISTERED PROFESSIONAL ENGINEER
RAFAEL ALCIDES RAVELO
C68941
EXP. 12/31/07
CIVIL
STATE OF CALIFORNIA

Caltrans Metric

DIST	COUNTY	ROUTE	TOTAL PROJECT	NO	SHEETS
04					

Carol Light 1/18/07
REGISTERED ELECTRICAL ENGINEER DATE

REGISTERED PROFESSIONAL ENGINEER
CAROL LIGHT
No. 10145
Exp. 09/30/07
ELECTRICAL
STATE OF CALIFORNIA

PLANS APPROVAL DATE

PARSONS BRINCKERHOFF QUADE & DOUGLAS, INC.
303 Second St., Suite 700N
San Francisco, CA 94107-1317

SILVERMAN & LIGHT
1201 PARK AVENUE - SUITE 100
EMERYVILLE, CA 94608-3632

The State of California or its officers or agents shall not be responsible for the accuracy or completeness of electronic copies of this plan sheet.

Caltrans now has a web site! To get to the web site, go to http://www.dot.ca.gov

DATE	REVISED BY	DATE REVISED
BJ	CL	

CALCULATED/DESIGNED BY
CHECKED BY

DESIGN OVERSIGHT
Behzad Golemohammadi

STATE OF CALIFORNIA - DEPARTMENT OF TRANSPORTATION
Caltrans

LAST REVISION 00-00-00
DATE PLOTTED => 09-FEB-2007
TIME PLOTTED => 03:18

CU 04251 | EA 0120P1

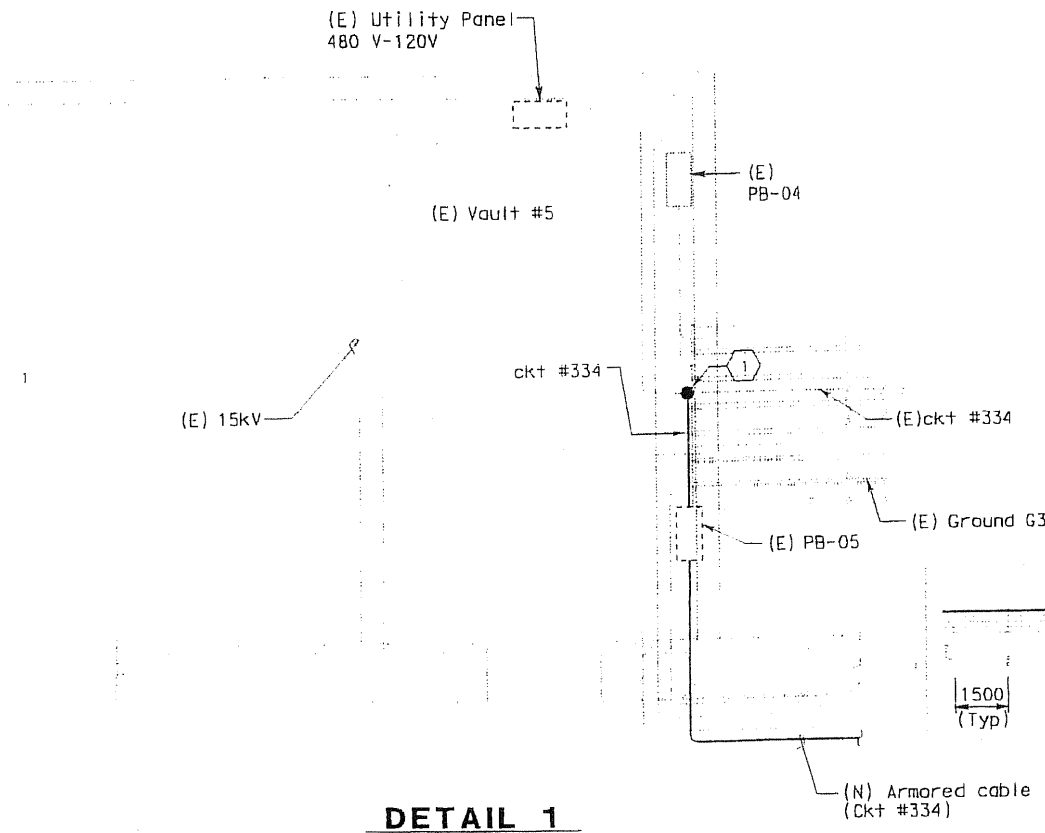

DETAIL 1
VAULT NO. 5
SCALE AS NOTED

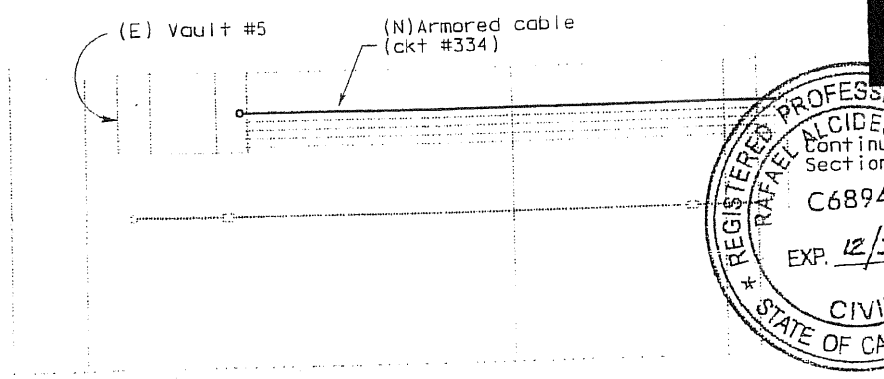

SECTION A-A
ENTRANCE TO VAULT #5
NO SCALE

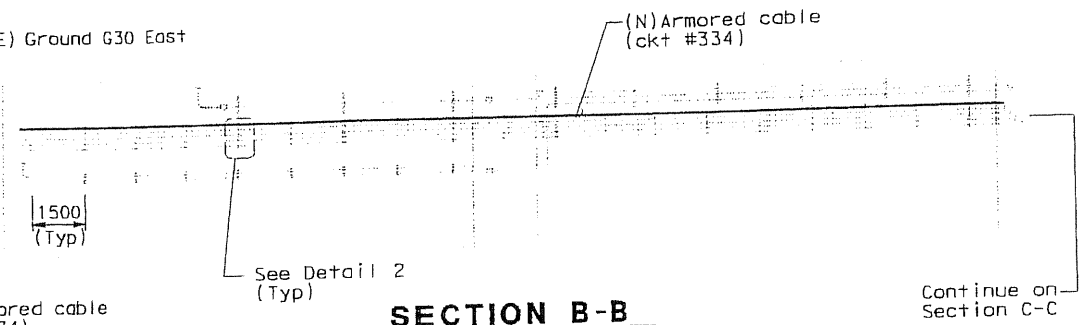

SECTION B-B
WEST WALL OF SOUTHGATE ROAD TUNNEL
NO SCALE

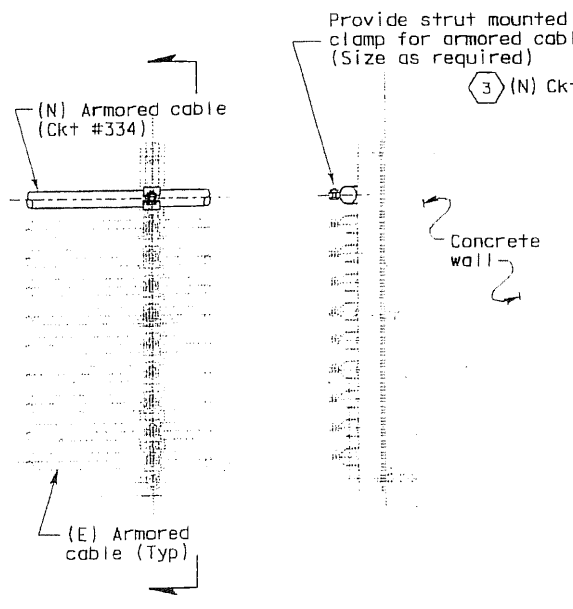

SECTION

DETAIL 2
ARMORED CABLE MOUNTING DETAIL
NO SCALE

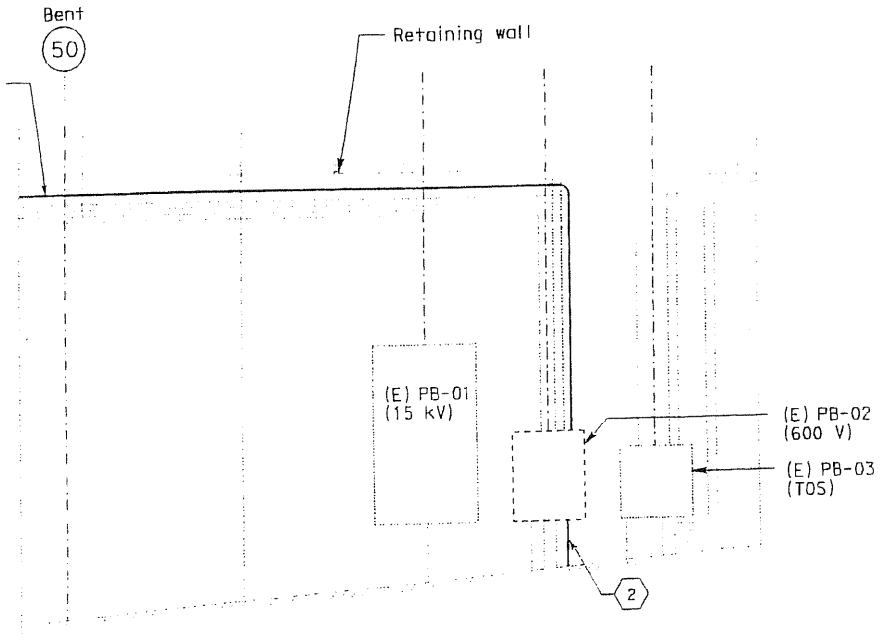

SECTION C-C
SPLICE BOXES MOUNTED ON NORTH RETAINING WALL NEAR BENT 50
NO SCALE

SHEET NOTES:

1. Intercept existing conductor 334 (East) and splice to new armored cable and route, as shown, to (E) PB-02.
2. Install new 2 #4 +G from (E)PB-02 to (E) LVCC control center in (E) YBI substation. Provide new 60 A, 2-Pole, 480 V circuit breaker and control to match existing.
3. Install new armored cable with 2 #6+G for ckt #334.

NOTES:

1. Contractor shall verify existing installation prior to intercepting and splicing the new armored cables to ensure continuity of electrical service to east span.
2. Contractor shall provide and install new armored cables and secure them by supports spaced no greater than 1500 mm apart.

CONTRACT NO. 04-0120R4

CONTRACT CHANGE ORDER NO. 68

SHEET 34 OF 42

DETAILS
YBI VIADUCT REPLACEMENT / WEST TIE IN
SECTIONS AND DETAILS
NO SCALE

E-19

Caltrans Metric

DIST	COUNTY	ROUTE	TOTAL PROJECT	NO	SHEETS
04					

Carol Light 1/18/07
REGISTERED ELECTRICAL ENGINEER DATE

PLANS APPROVAL DATE

REGISTERED PROFESSIONAL ENGINEER — CAROL LIGHT — No. 10145 — EXP. 09/30/07 — ELECTRICAL — STATE OF CALIFORNIA

PARSONS BRINCKERHOFF QUADE & DOUGLAS, INC.
303 Second St., Suite 700N
San Francisco, CA 94107-1317

SILVERMAN & LIGHT
1201 PARK AVENUE - SUITE 100
EMERYVILLE, CA 94608-3632

REGISTERED PROFESSIONAL ENGINEER — RAFAEL ALCIDES RABELO — Continue to Section B-B — C68941 — EXP. 12/31/07 — CIVIL — STATE OF CALIFORNIA

The State of California or its officers or agents shall not be responsible for the accuracy or completeness of electronic copies of this plan sheet.

Caltrans now has a web site! To get to the web site, go to http://www.dot.ca.gov

DESIGN OVERSIGHT	CALCULATED/ DESIGNED BY	DATE	REVISED BY	DATE REVISED
Behzad Golemohammadi	CHECKED BY	BJ	CL	

STATE OF CALIFORNIA - DEPARTMENT OF TRANSPORTATION
Caltrans

THIS PLAN ACCURATE FOR ELECTRICAL WORK ONLY
FOR REDUCED PLANS ORIGINAL SCALE IS IN MILLIMETERS 0 20 40 60 80

DGN FILE =>E-19.dgn
USERNAME =>hwang

CU 04251 | EA 0120P1

LAST REVISION 00-00-00
DATE PLOTTED =>09-SEP-2009
TIME PLOTTED =>13:39:09

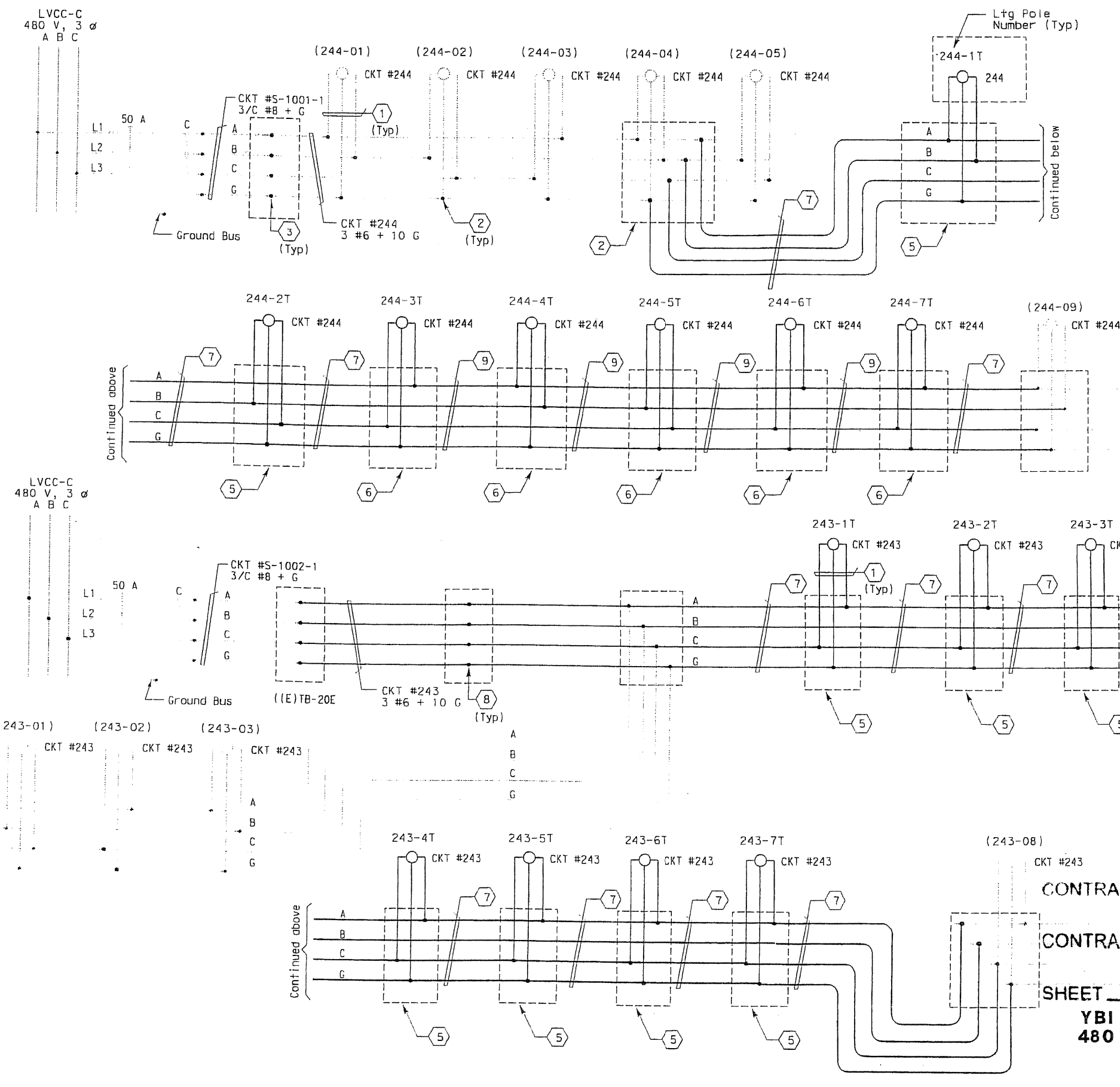

Caltrans Metric

REGISTERED PROFESSIONAL ENGINEER
RAFAEL ALCIDES RAYELO
C68941
EXP. 12/31/07
CIVIL
STATE OF CALIFORNIA

DIST	COUNTY	ROUTE	KILOMETER POST TOTAL PROJECT	SHEET No	TOTAL SHEETS
04					

Carol Light — REGISTERED ELECTRICAL ENGINEER — 1/18/07 DATE

REGISTERED PROFESSIONAL ENGINEER
CAROL LIGHT
No. 10145
EXP. 09/30/07
ELECTRICAL
STATE OF CALIFORNIA

PLANS APPROVAL DATE

PARSONS BRINCKERHOFF QUADE & DOUGLAS, INC.
303 Second St., Suite 700N
San Francisco, CA 94107-1317

SILVERMAN & LIGHT
1201 PARK AVENUE - SUITE 100
EMERYVILLE, CA 94608-3632

The State of California or its officers or agents shall not be responsible for the accuracy or completeness of electronic copies of this plan sheet.

Caltrans now has a web site! To get to the web site, go to http://www.dot.ca.gov

SHEET NOTES:

1. 3#10 AWG single conductors, see Detail 1.
2. Conductors spliced inside pull box PB-LTG (Pull box #9).
3. Conductors spliced inside (E) pull box located ion the retaining wall near Bent #38.
4. Existing pull box embeede in (E) concrete curb.
5. Temporary pull box mounted on the outside face of temporary K-Rail.
6. Type 9 Pull Box in permanent concrete barrier.
7. Temporary Jumper 3 #6 + 10G in 41mm flexible conduit.
8. Conductor spliced inside new pull box located in (E) Vault #2A
9. 41c-3 #6 + 10 G (480 V, Lighting) installed during stage 3.

NOTES:

1. References:

   -For LVCC-C 480 V Feeder Wiring Diagram see Sheet E-21.
   -For lighting layout plans, see sheets E-11
   -For 600 V Cable Block Diagram, see Sheet E-16.
   -For permanent ligting conductors use 3/c+gnd #6, 600 V, EPR insulation.
   -For permanent call box conductor, use 6/c, #16, 600 V, EPR insulation.

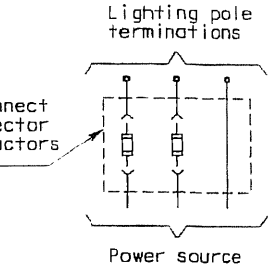

DETAIL-1
(TYP FOR EACH LTG POLE)

CONTRACT NO. 04-612OR4

CONTRACT CHANGE ORDER NO. 68

SHEET 35 OF 42

DETAILS
YBI VIADUCT REPLACEMENT / WEST TIE IN
480 V ROADWAY LIGHTING WIRING DIAGRAM

NO SCALE

E-20

BY	DATE	REVISED BY	DATE REVISED
BW	10/03		
BB	12/03		

CALCULATED/DESIGNED BY
CHECKED BY
DESIGN OVERSIGHT

STATE OF CALIFORNIA - DEPARTMENT OF TRANSPORTATION
Caltrans

THIS PLAN ACCURATE FOR ELECTRICAL WORK ONLY

FOR REDUCED PLANS ORIGINAL SCALE IS IN MILLIMETERS 0 20 40 60 80

DGN FILE => E-20.dgn
USERNAME => hwang

LAST REVISION 00-00-00
DATE PLOTTED => 09-FEB-2007
TIME PLOTTED => 03:11

CU 04251 EA 012OP1

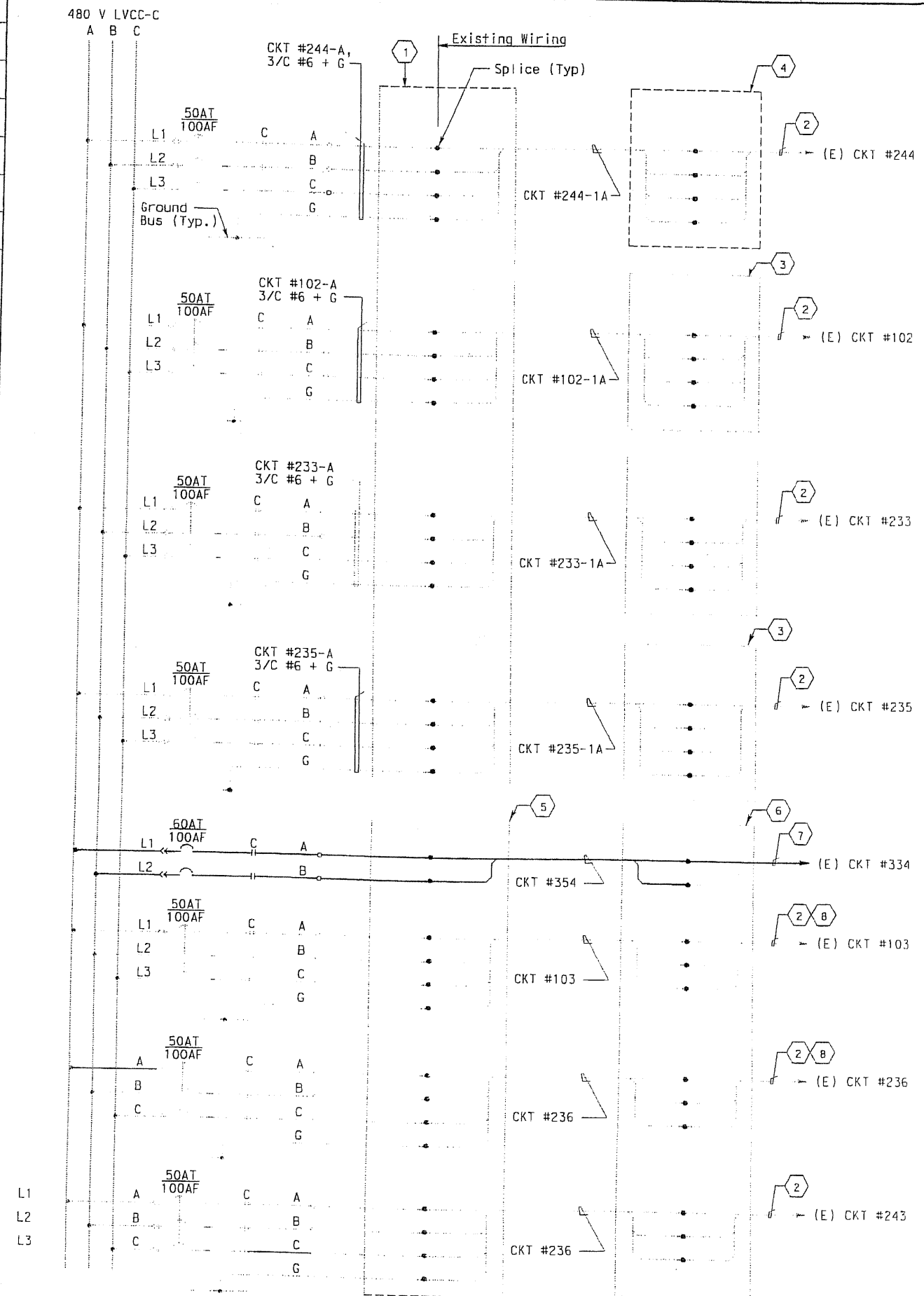

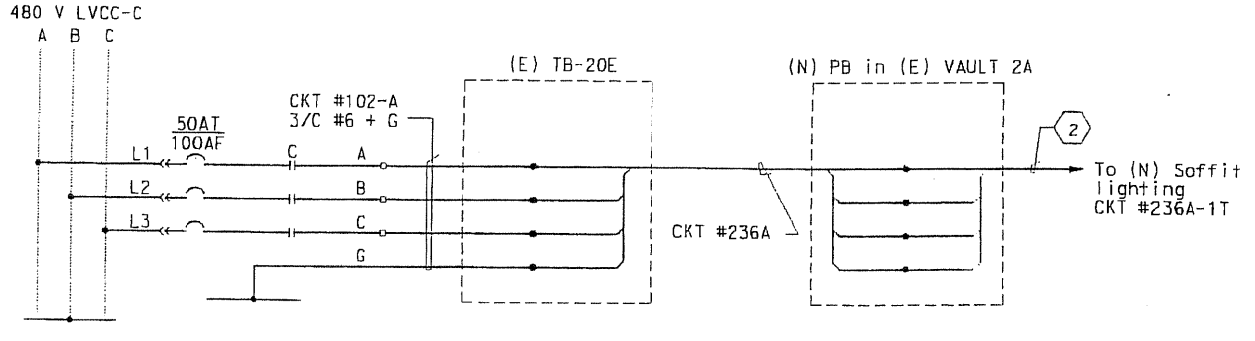

CONTRACT NO. 04-0120R4

CONTRACT CHANGE ORDER NO. 68

SHEET 36 OF 42

SHEET NOTES:

1. Existing TB-01 is located at Bent 48.
2. Intercept existing 3/C #6 + G cable.
3. Existing lighting splice box.
4. Existing splice box PB-06.
5. Existing PB-02 located on the retaining wall near Bent 50.
6. Existing PB-05 located in (E) vault #5.
7. Intercept existing 2- conductor cable (Ckt #334).
8. To pull box at Bent 48.

DETAILS
YBI VIADUCT REPLACEMENT / WEST TIE IN
480 V PANEL FEEDER WIRING DIAGRAM
NO SCALE

E-21

Caltrans Metric

REGISTERED PROFESSIONAL ENGINEER RAFAEL ALCIDES RAVELO C68941 EXP. 12/31/07 CIVIL STATE OF CALIFORNIA

DIST	COUNTY	ROUTE	KILOMETER POST TOTAL PROJECT	SHEET No	TOTAL SHEETS
04					

Carol Light 1/18/07
REGISTERED ELECTRICAL ENGINEER DATE

REGISTERED PROFESSIONAL ENGINEER CAROL LIGHT No. 10145 Exp. 09/30/07 ELECTRICAL STATE OF CALIFORNIA

PLANS APPROVAL DATE

PARSONS BRINCKERHOFF QUADE & DOUGLAS, INC.
303 Second St., Suite 700N
San Francisco, CA 94107-1317

SILVERMAN & LIGHT
1201 PARK AVENUE - SUITE 100
EMERYVILLE, CA 94608-3632

The State of California or its officers or agents shall not be responsible for the accuracy or completeness of electronic copies of this plan sheet.

Caltrans now has a web site! To get to the web site, go to http://www.dot.ca.gov

CALCULATED/ DESIGNED BY	BJ	DATE	REVISED BY
CHECKED BY	CL		DATE REVISED

DESIGN OVERSIGHT
Behzad Golemohammadi

STATE OF CALIFORNIA - DEPARTMENT OF TRANSPORTATION
Caltrans

THIS PLAN ACCURATE FOR ELECTRICAL WORK ONLY

FOR REDUCED PLANS ORIGINAL SCALE IS IN MILLIMETERS 0 20 40 60 80

DGN FILE => E-21.dgn
USERNAME => hwong

DATE PLOTTED => 09-FEB-2007
TIME PLOTTED => 03:11

LAST REVISION 00-00-00

CU 04251	EA 0120P1

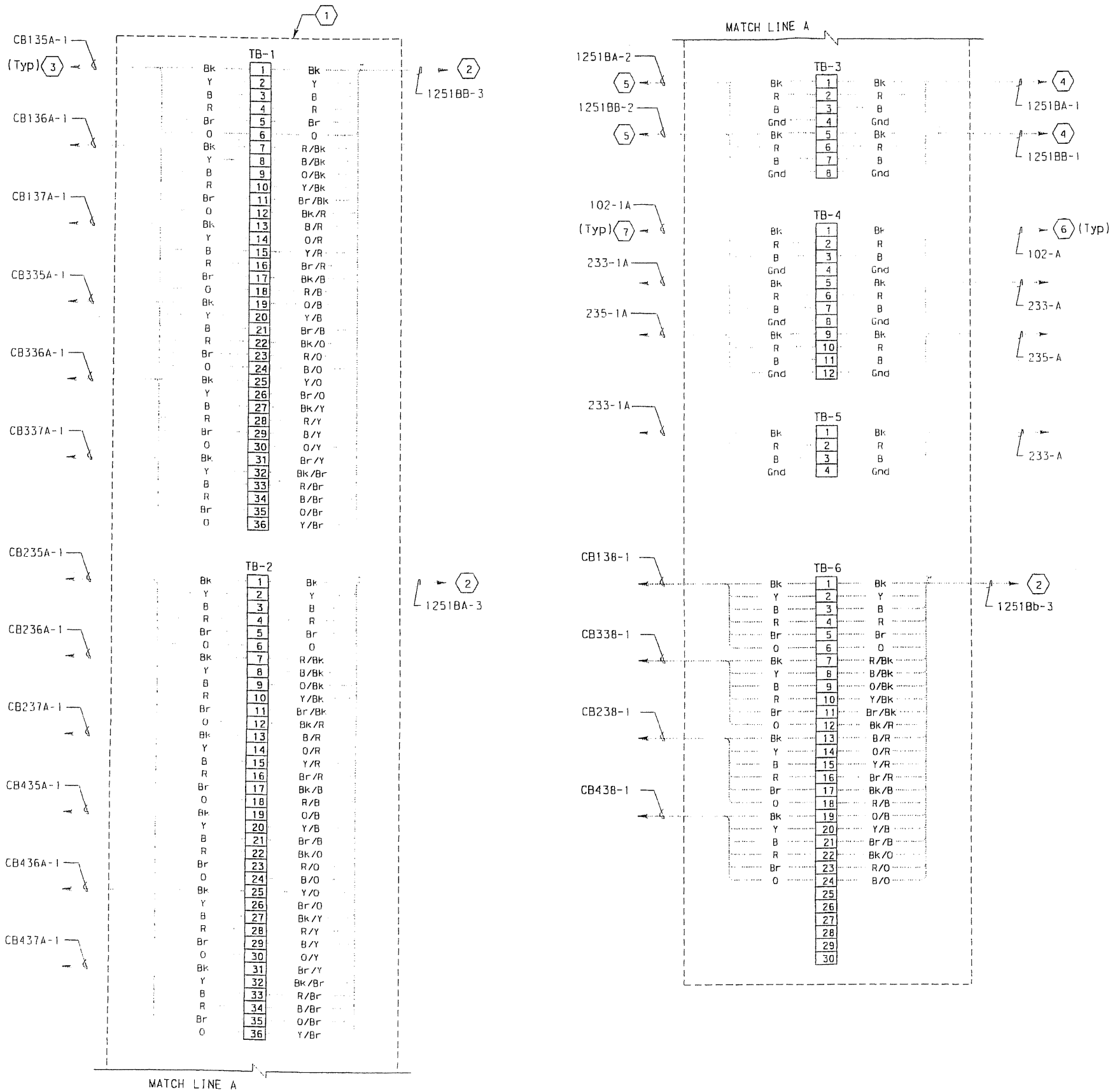

600 V TERMINAL BOX TB-01

DIST	COUNTY	ROUTE	KILOMETER POST TOTAL PROJECT	SHEET NO	TOTAL SHEETS
04					

Carol Light — REGISTERED ELECTRICAL ENGINEER — 1/18/07 DATE

PLANS APPROVAL DATE

REGISTERED PROFESSIONAL ENGINEER — CAROL LIGHT — No. 10145 — Exp. 09/30/07 — ELECTRICAL — STATE OF CALIFORNIA

PARSONS BRINCKERHOFF QUADE & DOUGLAS, INC.
303 Second St., Suite 700N
San Francisco, CA 94107-1317

SILVERMAN & LIGHT
1201 PARK AVENUE - SUITE 100
EMERYVILLE, CA 94608-3632

The State of California or its officers or agents shall not be responsible for the accuracy or completeness of electronic copies of this plan sheet.

Caltrans now has a web site! To get to the web site, go to http://www.dot.ca.gov

REGISTERED PROFESSIONAL ENGINEER — RAFAEL ALCIDES RAVELO — C68941 — EXP. 12/31/07 — CIVIL — STATE OF CALIFORNIA

SHEET NOTES:

1. (E) TB-01 is located on the north retaining wall near Bent #38.
2. To (E) RTU-7 in the (E) YBI Substation via (E) duct bank and (E) MH-3.
3. To existing junction box for (E) Call box.
4. To contactor in (E) RTU-7A in the (E) YBI Substation.
5. To junction box for (E) Call box CB-437 for 1251BA-2 and to junction box for (E) Call box CB-337 for 1251BB-2.
6. To (E) LVCC-C in the (E) YBI Substation.

CONTRACT NO. 04-0120R4

CONTRACT CHANGE ORDER NO. 68

SHEET 37 OF 42

DETAILS
YBI VIADUCT REPLACEMENT / WEST TIE IN
TERMINAL BOX TB-01 CONNECTION DIAGRAM

E-22

CALCULATED/ DESIGNED BY	BJ	DATE	REVISED BY	DATE REVISED
CHECKED BY	CL			

DESIGN OVERSIGHT — Behzad Golamohammadi

STATE OF CALIFORNIA - DEPARTMENT OF TRANSPORTATION — Caltrans

THIS PLAN ACCURATE FOR ELECTRICAL WORK ONLY

FOR REDUCED PLANS ORIGINAL SCALE IS IN MILLIMETERS 0 20 40 60 80

DGN FILE => E-22.dgn
USERNAME => hwong

CU 04251 | EA 0120P1

LAST REVISION 00-00-00 — DATE PLOTTED => 09-FEB-2007 — TIME PLOTTED => 03:11

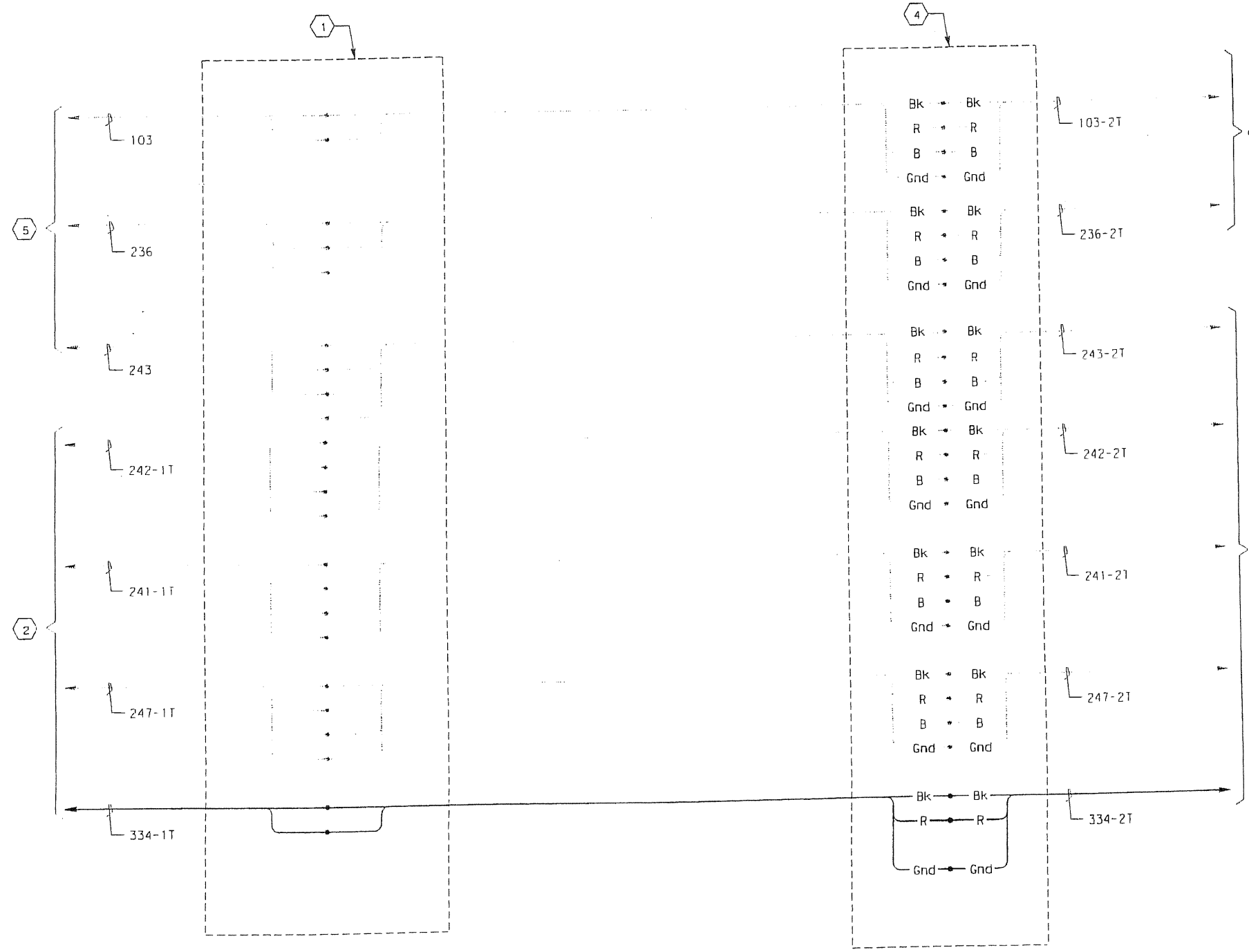

600 V SPLICE BOX PB-05

600 V SPLICE BOX PB-02

Caltrans Metric

REGISTERED PROFESSIONAL ENGINEER
RAFAEL ALCIDES RAVELO
C68941
EXP. 12/31/07
CIVIL
STATE OF CALIFORNIA

DIST	COUNTY	ROUTE	TOTAL PROJECT	NO	SHEETS
04					

Carol Light — REGISTERED ELECTRICAL ENGINEER — 1/18/07 DATE

PLANS APPROVAL DATE

REGISTERED PROFESSIONAL ENGINEER — CAROL LIGHT No. 10145 Exp 09/30/07 ELECTRICAL — STATE OF CALIFORNIA

PARSONS BRINCKERHOFF QUADE & DOUGLAS, INC.
303 Second St., Suite 700N
San Francisco, CA 94107-1317

SILVERMAN & LIGHT
1201 PARK AVENUE - SUITE 100
EMERYVILLE, CA 94608-3632

The State of California or its officers or agents shall not be responsible for the accuracy or completeness of electronic copies of this plan sheet.

Caltrans now has a web site! To get to the web site, go to http://www.dot.ca.gov

SHEET NOTES:

1. (E) PB-05 is located in (E) Vault #5.
2. To existing East Span cables in (E) Vault #5.
3. To (E) TB-20E located in (E) MH-2.
4. (E) PB-02 is located on the retaining wall near Bent 50.
5. (E) ckst #103, #236 and #243 to be cut and removed when the permanent cable feeders are installed.

NOTES:

1. References:
   - For 600 V cable block diagram, see sheet E-15.
2. Contractor shall disconnect and remove temporary wiring when permanent installation has been completed.

CONTRACT NO. 04-0120R4

CONTRACT CHANGE ORDER NO. 68

SHEET 38 OF 42

DETAILS
YBI VIADUCT REPLACEMENT / WEST TIE IN
SPLICE BOX PB-02 AND PB-05 CONNECTION DIAGRAMS

NO SCALE

E-23

STATE OF CALIFORNIA - DEPARTMENT OF TRANSPORTATION — Caltrans

DESIGN OVERSIGHT — Behzad Golemohammadi

CALCULATED/ DESIGNED BY	BJ	DATE	REVISED BY
CHECKED BY	CL		DATE REVISED

LAST REVISION 00-00-00 — DATE PLOTTED => 09-FEB-2007 — TIME PLOTTED => 03:12

THIS PLAN ACCURATE FOR ELECTRICAL WORK ONLY

FOR REDUCED PLANS ORIGINAL SCALE IS IN MILLIMETERS 0 20 40 60 80

DGN FILE => E-23.dgn
USERNAME => hwong

CU 04251

EA 0120P1

DIST	COUNTY	ROUTE	KILOMETER POST TOTAL PROJECT	SHEET No	TOTAL SHEETS
04					

Caltrans Metric

Carol Light 1/18/07
REGISTERED ELECTRICAL ENGINEER DATE

PLANS APPROVAL DATE

REGISTERED PROFESSIONAL ENGINEER CAROL LIGHT No. 10145 Exp. 09/30/07 ELECTRICAL STATE OF CALIFORNIA

PARSONS BRINCKERHOFF QUADE & DOUGLAS, INC.
303 Second St., Suite 700N
San Francisco, CA 94107-1317

SILVERMAN & LIGHT
1201 PARK AVENUE - SUITE 100
EMERYVILLE, CA 94608-3632

The State of California or its officers or agents shall not be responsible for the accuracy or completeness of electronic copies of this plan sheet.

Caltrans now has a web site! To get to the web site, go to http://www.dot.ca.gov

REGISTERED PROFESSIONAL ENGINEER RAFAEL ALCIDES RAVELO C68941 EXP. 12/31/07 CIVIL STATE OF CALIFORNIA

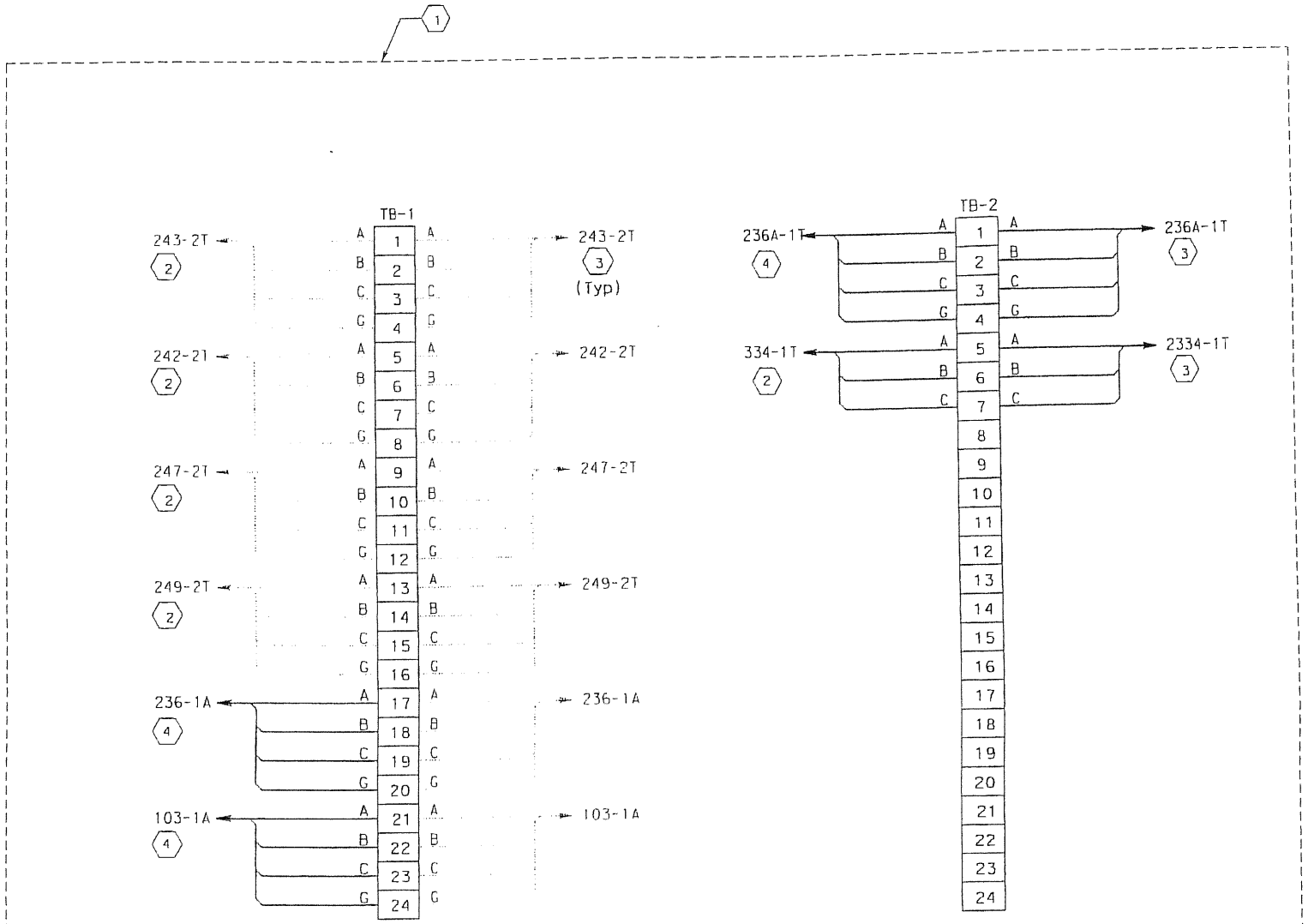

(E) 600 V TERMINAL BOX TB-20E

SHEET NOTES:

1. (E) TB-20E is located in (E) MH-2.
2. To (E) PB-02 located on the retaining wall near Bent #50.
3. To (E) LVCC-C in the (E) YBI Substation.
4. To new pull box in (E) Vault #2A.

NOTES:

1. References:
   - For 600 V cable block diagram, see sheet E-15 and E-16.

CONTRACT NO. 04-0120R4

CONTRACT CHANGE ORDER NO. 68

SHEET 39 OF 42

DETAILS
YBI VIADUCT RELACEMENT / WEST TIE IN
TERMINAL BOX TB-20E CONNECTION DIAGRAM
NO SCALE

E-24

STATE OF CALIFORNIA - DEPARTMENT OF TRANSPORTATION
Caltrans

DESIGN OVERSIGHT: Behzad Golemohammadi
CALCULATED/DESIGNED BY: BJ
CHECKED BY: CL
DATE
REVISED BY
DATE REVISED

THIS PLAN ACCURATE FOR ELECTRICAL WORK ONLY

FOR REDUCED PLANS ORIGINAL SCALE IS IN MILLIMETERS 0 20 40 60 80

DGN FILE => E-24.dgn
USERNAME => hwong

CU 04251

EA 0120P1

LAST REVISION 00-00-00
DATE PLOTTED => 09-FEB-2007
TIME PLOTTED => 03:12

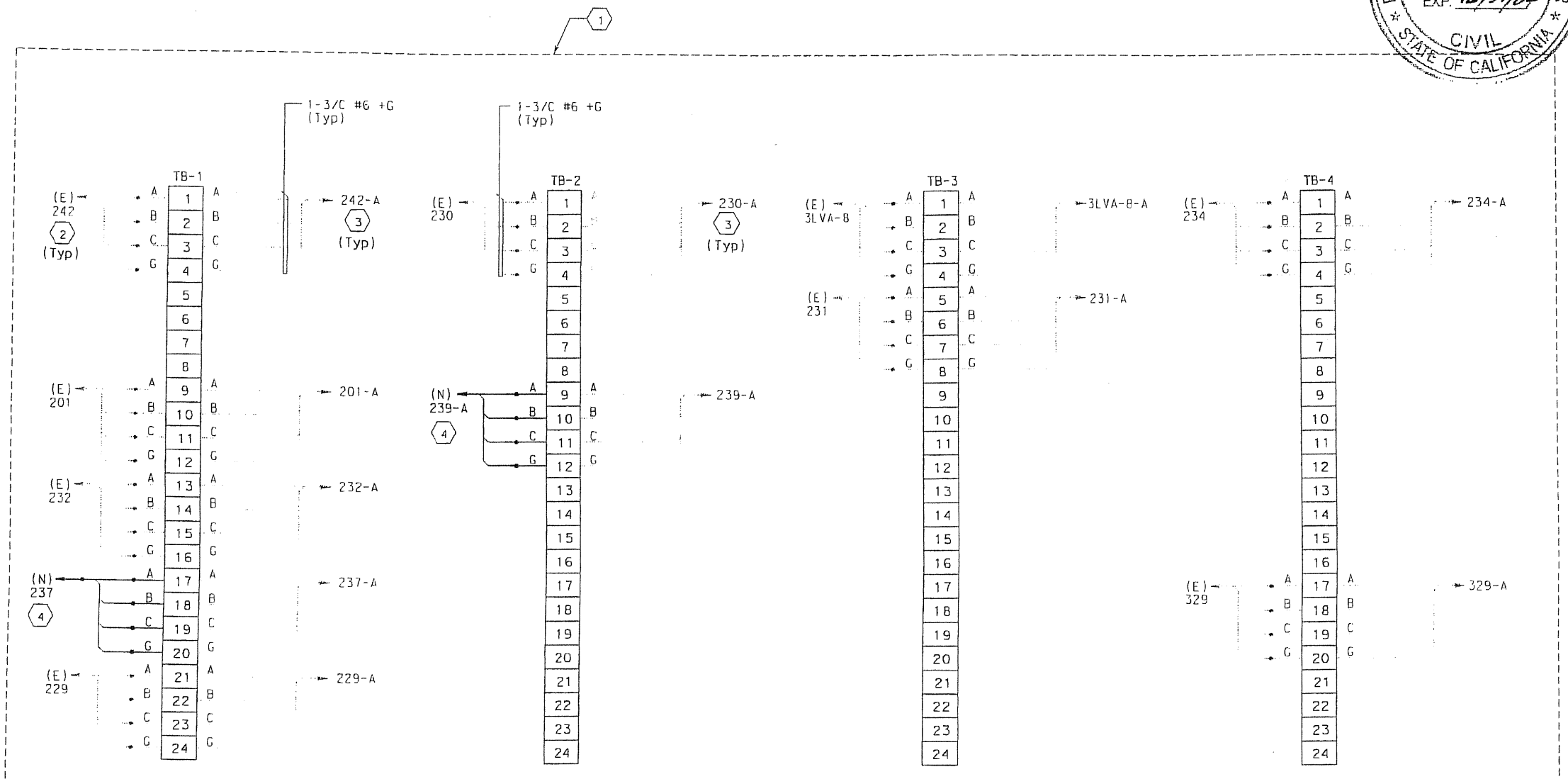

600V TERMINAL BOX TB-20W

SHEET NOTES:

1. (E) TB-20W located in (E) Vault #2A.
2. Existing west span cables.
3. To (E) LVCC-C in the (E) YB1 Substation.
4. New Cable feeder to new Viaduct soffit lighting splice box.

NOTES:

1. References:
   - For 600 V cable block diagram, see sheet E-14.

CONTRACT NO. 04-012084

CONTRACT CHANGE ORDER NO. 68

SHEET 40 OF 68

DETAILS
YBI VIADUCT REPLACEMENT / WEST TIE IN
TERMINAL BOX TB-20W CONNECTION DIAGRAM

NO SCALE

E-25

DIST	COUNTY	ROUTE	KILOMETER POST TOTAL PROJECT	SHEET No.	TOTAL SHEETS
04					

Carol Light — REGISTERED ELECTRICAL ENGINEER — 1/18/07 DATE

PLANS APPROVAL DATE

REGISTERED PROFESSIONAL ENGINEER — CAROL LIGHT — No. 10145 — Exp. 09/30/07 ELECTRICAL — STATE OF CALIFORNIA

REGISTERED PROFESSIONAL ENGINEER — RAFAEL ALCIDES RAVELO — C68941 — EXP. 12/31/07 — CIVIL — STATE OF CALIFORNIA

PARSONS BRINCKERHOFF QUADE & DOUGLAS, INC.
303 Second St., Suite 700N
San Francisco, CA 94107-1317

SILVERMAN & LIGHT
1201 PARK AVENUE - SUITE 100
EMERYVILLE, CA 94608-3632

The State of California or its officers or agents shall not be responsible for the accuracy or completeness of electronic copies of this plan sheet.

Caltrans now has a web site! To get to the web site, go to http://www.dot.ca.gov

DESIGN OVERSIGHT	CALCULATED/ DESIGNED BY	BJ	DATE	REVISED BY
Behzad Golemohammadi	CHECKED BY	CL		DATE REVISED

STATE OF CALIFORNIA - DEPARTMENT OF TRANSPORTATION — Caltrans

THIS PLAN ACCURATE FOR ELECTRICAL WORK ONLY

FOR REDUCED PLANS ORIGINAL SCALE IS IN MILLIMETERS 0 20 40 60 80

DGN FILE => E-25.dgn
USERNAME => hwong

CU 04251 | EA 0120P1

LAST REVISION 00-00-00 | DATE PLOTTED => 09-FEB-2007 | TIME PLOTTED => 03:12

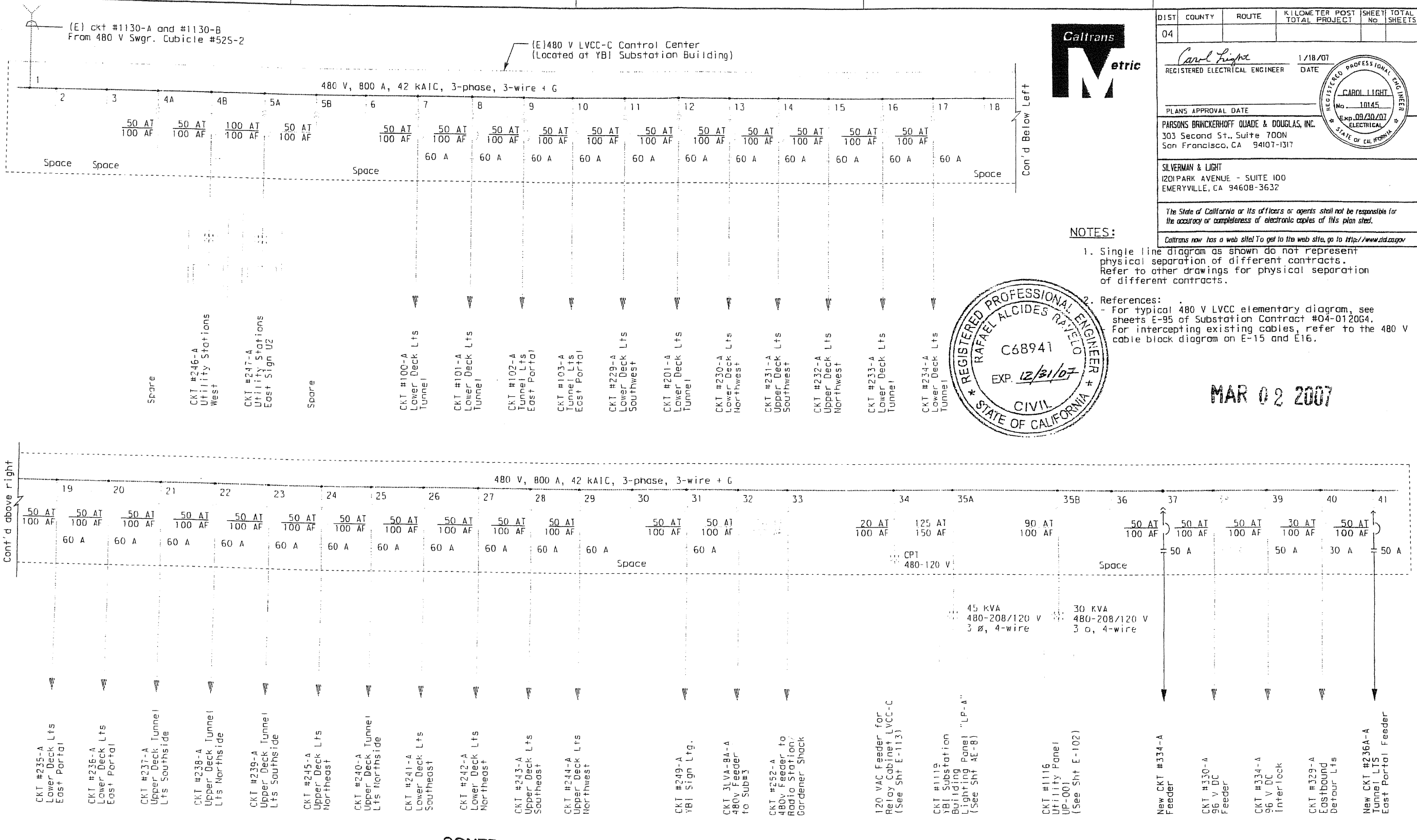

NOTES:

1. Single line diagram as shown do not represent physical separation of different contracts. Refer to other drawings for physical separation of different contracts.
2. References:
   - For typical 480 V LVCC elementary diagram, see sheets E-95 of Substation Contract #04-0120G4.
   - For intercepting existing cables, refer to the 480 V cable block diagram on E-15 and E16.

MAR 02 2007

REGISTERED PROFESSIONAL ENGINEER
RAFAEL ALCIDES RAMIREZ
C68941
EXP. 12/31/07
CIVIL
STATE OF CALIFORNIA

DIST	COUNTY	ROUTE	KILOMETER POST TOTAL PROJECT	SHEET NO	TOTAL SHEETS
04					

Carol Light — REGISTERED ELECTRICAL ENGINEER — 1/18/07 DATE

PLANS APPROVAL DATE

REGISTERED PROFESSIONAL ENGINEER — CAROL LIGHT — No. 10145 — Exp. 09/30/07 ELECTRICAL — STATE OF CALIFORNIA

PARSONS BRINCKERHOFF QUADE & DOUGLAS, INC.
303 Second St., Suite 700N
San Francisco, CA 94107-1317

SILVERMAN & LIGHT
1201 PARK AVENUE - SUITE 100
EMERYVILLE, CA 94608-3632

The State of California or its officers or agents shall not be responsible for the accuracy or completeness of electronic copies of this plan sheet.

Caltrans now has a web site! To get to the web site, go to http://www.dot.ca.gov

DATE	REVISED BY
	DATE REVISED
BJ	CL
CALCULATED/ DESIGNED BY	CHECKED BY

DESIGN OVERSIGHT
Behzad Golemohammadi

STATE OF CALIFORNIA - DEPARTMENT OF TRANSPORTATION
Caltrans

CONTRACT NO. 04-0120R4

CONTRACT CHANGE ORDER NO. 68

SHEET 41 OF 42

THIS PLAN ACCURATE FOR ELECTRICAL WORK ONLY

DETAILS
YBI VIADUCT REPLACEMENT / WEST TIE IN
480 V LVCC-C SINGLE LINE DIAGRAM
NO SCALE

E-26

FOR REDUCED PLANS ORIGINAL SCALE IS IN MILLIMETERS 0 20 40 60 80

DGN FILE => E-26.dgn
USERNAME => hwong

CU 04251 | EA 0120P1

LAST REVISION 00-00-00
DATE PLOTTED => 09-FEB-2007
TIME PLOTTED => 03:13

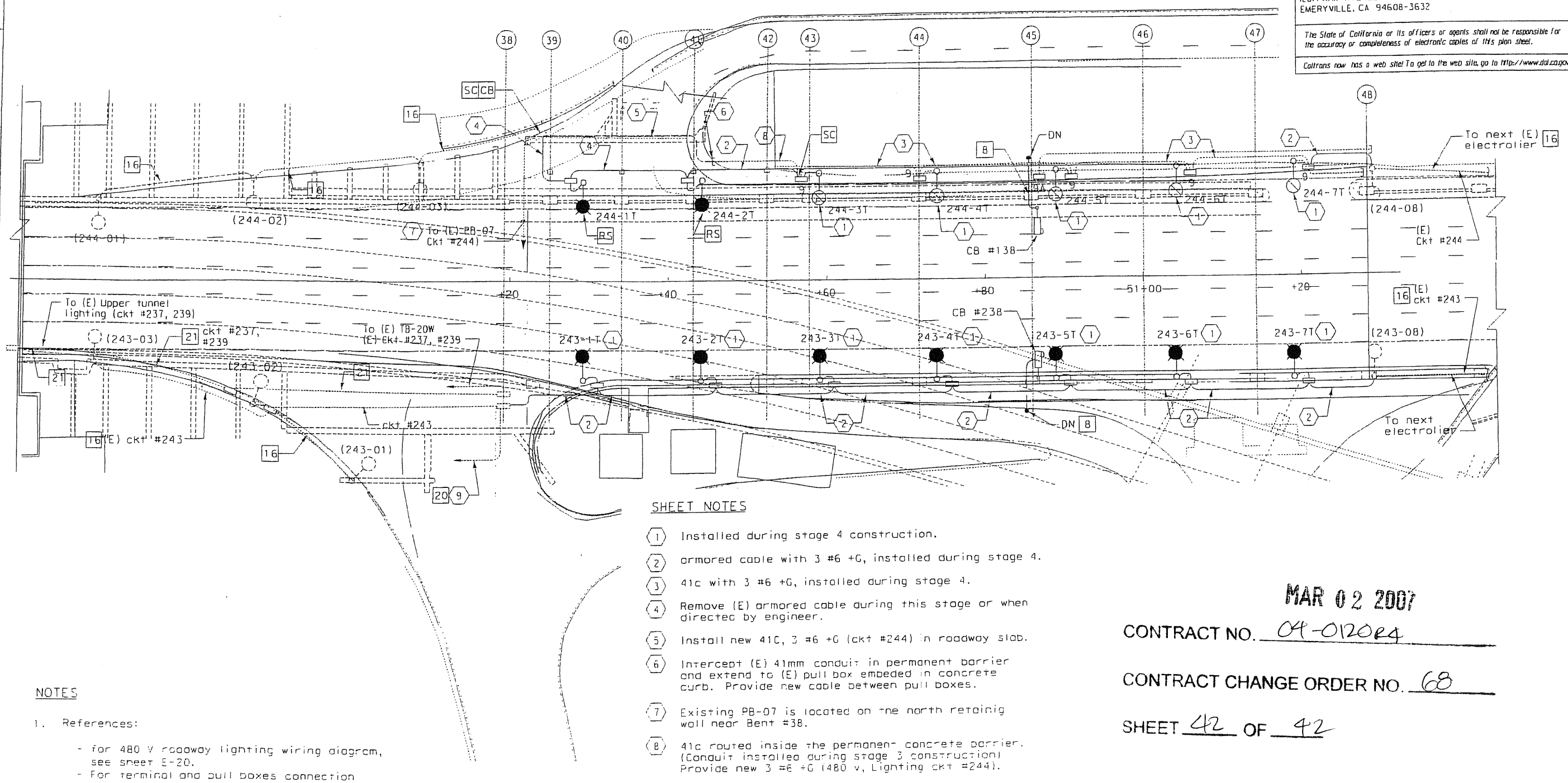

SHEET NOTES

1. Installed during stage 4 construction.
2. armored cable with 3 #6 +G, installed during stage 4.
3. 41c with 3 #6 +G, installed during stage 4.
4. Remove (E) armored cable during this stage or when directed by engineer.
5. Install new 41C, 3 #6 +G (ckt #244) in roadway slab.
6. Intercept (E) 41mm conduit in permanent barrier and extend to (E) pull box embeded in concrete curb. Provide new cable between pull boxes.
7. Existing PB-07 is located on the north retainig wall near Bent #38.
8. 41c routed inside the permanent concrete barrier. (Conduit installed during stage 3 construction) Provide new 3 #6 +G (480 v, Lighting ckt #244).

NOTES

1. References:
   - for 480 V roadway lighting wiring diagram, see sheet E-20.
   - For terminal and pull boxes connection diagrams, see sheet E-21 thru E-25.

MAR 02 2007

CONTRACT NO. 04-0120R4

CONTRACT CHANGE ORDER NO. 68

SHEET 42 OF 42

SIGNAL AND LIGHTING (STAGE 5)
YBI VIADUCT REPLACEMENT / WEST TIE IN

SCALE: 1:250

ADDED 2-28-2007

E-27

THIS PLAN ACCURATE FOR ELECTRICAL WORK ONLY

FOR REDUCED PLANS ORIGINAL SCALE IS IN MILLIMETERS

DGN FILE => $REQUEST
USERNAME => $USER

CU | EA

STATE OF CALIFORNIA - DEPARTMENT OF TRANSPORTATION

Caltrans

DESIGN OVERSIGHT: Behzad Golemohammadi

CALCULATED/DESIGNED BY: BJ | DATE | REVISED BY

CHECKED BY: CL | DATE REVISED

LAST REVISION 00-00-00 | DATE PLOTTED => $DATE | TIME PLOTTED => $TIME

REGISTERED PROFESSIONAL ENGINEER RAFAEL ALCIDES RAVELO C68941 EXP. 12/31/2007 CIVIL STATE OF CALIFORNIA

Caltrans Metric

04

Carol Light 1/18/07
REGISTERED ELECTRICAL ENGINEER DATE

PLANS APPROVAL DATE

REGISTERED PROFESSIONAL ENGINEER CAROL LIGHT No. 10145 Exp. 09/30/07 ELECTRICAL STATE OF CALIFORNIA

PARSONS BRINCKERHOFF QUADE & DOUGLAS, INC.
303 Second St., Suite 700N
San Francisco, CA 94107-1317

SILVERMAN & LIGHT
1201 PARK AVENUE - SUITE 100
EMERYVILLE, CA 94608-3632

The State of California or its officers or agents shall not be responsible for the accuracy or completeness of electronic copies of this plan sheet.

Caltrans now has a web site! To get to the web site, go to http://www.dot.ca.gov

STATE OF CALIFORNIA - DEPARTMENT OF TRANSPORTATION

CONTRACT CHANGE ORDER MEMORANDUM

DATE: 7/12/2007 Page 1 of 2

TO: PETER SIEGENTHALER / DENNIS TURCHON	FILE: **E.A.** 04 - 0120R4
FROM: MAHANTESH ANIGOL	**CO-RTE-PM** SF-80-12.6/13.2
	FED. NO. ACBRIM-080-1(097)N
CCO#: **68** SUPPLEMENT#: **0** Category Code: **CBPC**	CONTINGENCY BALANCE (incl. this change) **$4,568,240.67**
COST: **$140,000.00** INCREASE ☑ DECREASE ☐	HEADQUARTERS APPROVAL REQUIRED? ☑ YES ☐ NO
SUPPLEMENTAL FUNDS PROVIDED: **$0.00**	IS THIS REQUEST IN ACCORDANCE WITH ENVIRONMENTAL DOCUMENTS? ☑ YES ☐ NO
CCO DESCRIPTION: Electrical work phase 1 YBI Viaduct/West	**PROJECT DESCRIPTION:** CONSTRUCT ROUTE 80 TEMP BYPASS STRUCTURE

Original Contract Time:	Time Adj. This Change:	Previously Approved CCO Time Adjustments:	Percentage Time Adjusted: (including this change)	Total # of Unreconciled Deferred Time CCO(s): (including this change)
475 Day(s)	**0** Day(s)	**381** Day(s)	**80** %	**7**

THIS CHANGE ORDER PROVIDES FOR:

Prepare the jobsite for demolition and constuction of the new Viaduct / West Tie-In interface by relocating, installing, removing electrical circuits and equipment for the electrical construction of Phase 1 of the West Tie-In structure in accordance with the attached plans and specifications.

This Contract originally required that a Temporary Bypass Structure (TBS) be designed and constructed to facilitate the completion of the San Francisco-Oakland Bay Bridge corridor projects by the winter of 2006. The primary goal of the corridor projects is to achieve seismic safety as soon as possible. Due to extensions in the corridor schedule, the TBS will not be required to be in service until late 2009.

On June 14, 2006, the State issued Letter Number 713 removing design responsibilities for both the East Tie-In and West Tie-In structures from the Contractor and assumed the role of the Engineer of Record for these segments. This is documented in the memorandum titled, "Strategy for South South Detour Completion," which is attached to this Change Order. As part of that memorandum, work at the West Tie-In area is broken up into two phases with the first phase currently under way. However, prior to demolition of the northside of the Viaduct structure, there are existing electrical utilities that must first be relocated.

For this work, the Contractor will be compensated at Extra Work at Force Account for an estimated cost of $140,000.00., which can be financed from the project's contingency funds.

A cost analysis, as well as other supporting documents and information relative to this change order, are on file with the project records.

This change was requested by Mike Whiteside, YBI Coordination Engineer. This change was discussed with Ken Terpstra - Project Manager and Rob Kobal - HQ Asst. Construction Coordinator. Headquarter's Issue & Approve Memorandum was granted on 7/12/07.

Maintenance concurrence is not required, as this work does not affect the maintenance of the structure.

No adjustment in contract time will be made since this work is not a controlling item.

Approval of this change order is recommended by the Resident Engineer.

006351 AUG 16
RECEIVED

ADA Notice: For individuals with sensory disabilities, this document is available in alternate formats. For information call: (916) 654-6410 or TDD (916) 654-3880 or write Records and Forms Management, 1120 N Street, MS-89, Sacramento, CA 95814.

CONCURRED BY:			
Construction Engineer:	Mahantesh Anigol	Date	7/12/07
Bridge Engineer:		Date	
Project Engineer:		Date	
Project Manager:	Ken Terpstra	Date	7/10/07
FHWA Rep.:		Date	
Environmental:		Date	
Other (specify):	Rob Kobal, HQ Asst. Const. Coord.	Date	7/10/07
Other (specify):		Date	
District Prior Approval By:		Date	
HQ (Issue Approve) By:	Ken Darby, HQ CCO Engineer	Date	7/12/07
Resident Engineer's Signature: M.U. Anigol		Date	7/12/07

ESTIMATE OF COST

	THIS REQUEST	TOTAL TO DATE
ITEMS	$0.00	$0.00
FORCE ACCOUNT	$140,000.00	$140,000.00
AGREED PRICE	$0.00	$0.00
ADJUSTMENT	$0.00	$0.00
TOTAL	$140,000.00	$140,000.00

FEDERAL PARTICIPATION

☐ PARTICIPATING ☐ PARTICIPATING IN PART ☑ NONE
☐ NON-PARTICIPATING (MAINTENANCE) ☐ NON-PARTICIPATING

FEDERAL SEGREGATION (if more than one Funding Source or P.I.P. type)
☑ CCO FUNDED PER CONTRACT ☐ CCO FUNDED AS FOLLOWS

FEDERAL FUNDING SOURCE	PERCENT

ADA Notice: For individuals with sensory disabilities, this document is available in alternate formats. For information call: (916) 654-6410 or TDD (916) 654-3880 or write Records and Forms Management, 1120 N Street, MS-89, Sacramento, CA 95814.

STATE OF CALIFORNIA - DEPARTMENT OF TRANSPORTATION

CONTRACT CHANGE ORDER

Change Requested by: Engineer

CCO 68	Suppl. No. 1	Contract No. 04 - 0120R4	Road SF-80-12.6/13.2	FED. AID LOC.: ACBRIM-080-1(097)N

To: **CC MYERS INC**

You are directed to make the following changes from the plans and specifications or do the following described work not included in the plans and specifications for this contract. ***NOTE: This change order is not effective until approved by the Engineer.***

Description of work to be done, estimate of quantities and prices to be paid. (Segregate between additional work at contract price, agreed price and force account.) Unless otherwise stated, rates for rental of equipment cover only such time as equipment is actually used and no allowance will be made for idle time. This last percentage shown is the net accumulated increase or decrease from the original quantity in the Engineer's Estimate.

Extra Work at Force Account:

As authorized by the Engineer:

Provide and install electrical circuits and equipment for Stages 2, 3, and 4 electrical work at the West Tie-In (Phase 1) structure between Bents 39 to 48 as per the attached Plans and Special Provisions of Contract Change Order 68, Supplement 0 (zero).

For this work, payment will be in accordance with Section 4-1.03D, Extra Work, of the Standard Specifications, and Section 5-1.24, Force Account Payment, of the Special Provisions, and no other compensation will be allowed therefor.

No adjustment in contract time will be made since this work is not a controlling operation.

Estimated cost of Extra Work at Force Account $510,000.00

RECEIVED
DEC 14 07
096783

Estimated Cost: Increase ☑ Decrease ☐ **$510,000.00**

By reason of this order the time of completion will be adjusted as follows: 0 days

Submitted by

Signature	Resident Engineer BILL CASEY	Date 10-1-07

Approval Recommended by

Signature	Area Construction Manager DENNIS TURCHON	Date 10/1/07

Engineer Approval by

Signature	Area Construction Manager DENNIS TURCHON	Date 10/22/07

We the undersigned contractor, have given careful consideration to the change proposed and agree, if this proposal is approved, that we will provide all equipment, furnish the materials, except as may otherwise be noted above, and perform all services necessary for the work above specified, and will accept as full payment therefor the prices shown above.

NOTE: If you, the contractor, do not sign acceptance of this order, your attention is directed to the requirements of the specifications as to proceeding with the ordered work and filing a written protest within the time therein specified.

Contractor Acceptance by

Signature	(Print name and title) DANIEL E. HOMICK, PRESIDENT	Date 10/15/07

STATE OF CALIFORNIA - DEPARTMENT OF TRANSPORTATION

CONTRACT CHANGE ORDER MEMORANDUM

TO: MIKE FORNER / DENNIS TURCHON	FILE: **E.A.** 04 - 0120R4
	CO-RTE-PM SF-80-12.6/13.2
FROM: WILLIAM CASEY	**FED. NO.** ACBRIM-080-1(097)N
CCO#: **68** SUPPLEMENT#: **1** Category Code: **CBPC**	CONTINGENCY BALANCE (incl. this change) **$17,374,367.20**
COST: **$510,000.00** INCREASE ☑ DECREASE ☐	HEADQUARTERS APPROVAL REQUIRED? ☑ YES ☐ NO
SUPPLEMENTAL FUNDS PROVIDED: **$0.00**	IS THIS REQUEST IN ACCORDANCE WITH ENVIRONMENTAL DOCUMENTS? ☑ YES ☐ NO
CCO DESCRIPTION: WTI Phase 1 Temp Elec. Stages 2, 3, 4	**PROJECT DESCRIPTION:** CONSTRUCT ROUTE 80 TEMP BYPASS STRUCTURE

Original Contract Time:	Time Adj. This Change:	Previously Approved CCO Time Adjustments:	Percentage Time Adjusted: (including this change)	Total # of Unreconciled Deferred Time CCO(s): (including this change)
475 Day(s)	**0** Day(s)	**381** Day(s)	**80** %	**7**

THIS CHANGE ORDER PROVIDES FOR:

Installing electrical circuits and equipment for the electrical construction of Stages 2, 3, and 4 of the West Tie-In (Phase 1) structure in accordance with the plans and specifications attached with Contract Change Order No. 68, Supplement 0 (zero).

This Contract originally required that a Temporary Bypass Structure (TBS) be designed and constructed to facilitate the completion of the San Francisco-Oakland Bay Bridge corridor projects by the winter of 2006. The primary goal of the corridor projects is to achieve seismic safety as soon as possible. Due to extensions in the corridor schedule, the TBS will not be required to be in service until late 2009.

On June 14, 2006, the State issued Letter Number 713 removing design responsibilities for both the East Tie-In and West Tie-In structures from the Contractor and assumed the role of the Engineer of Record for these segments. This is documented in the memorandum titled, "Strategy for South South Detour Completion". As part of that memorandum, work at the West Tie-In area is broken up into Phase 1 and Phase 2, with Phase 1 - Stage 1 electrical work now completed. Phase 1 - Stages 2, 3, and 4 electrical work will complete integration between the new and existing electrical systems of the new West Tie-In (Phase 1) structure. Stage 2 work involves installing new cable for call boxes and auxillary power, Stage 3 work involves installing conduit, wiring, and light fixtures onto the new WTI structure, and Stage 4 work involves integrating the new lighting and upper & lower deck call boxes into the existing electrical system.

For this work, the Contractor will be compensated at Extra Work at Force Account for an estimated cost of $510,000.00., which can be financed from the project's contingency funds.

A cost analysis, as well as other supporting documents and information relative to this change order, are on file with the project records.

This change was requested by Mike Whiteside, YBI Coordination Engineer per Memorandum dated December 6, 2006. This change was concurred with by Alec Melkonians - Project Manager, Hong Wong - Project Engineer, and Bill Zanetich - Maintenance. Headquarter's Issue & Approve Memorandum was granted on XX/XX/07.

No adjustment in contract time will be made since this work is not a controlling item.

Approval of this change order is recommended by the Resident Engineer.

ADA Notice: For individuals with sensory disabilities, this document is available in alternate formats. For information call: (916) 654-6410 or TDD (916) 654-3880 or write Records and Forms Management, 1120 N Street, MS-89, Sacramento, CA 95814.

CONCURRED BY:		
Construction Engineer:	Mahantesh Anigol MA	Date 10/01/07
Bridge Engineer:		Date
Project Engineer:	Hong Wong	Date 9/28/07
Project Manager:	Alec Melkonians	Date 10/1/07
FHWA Rep.:		Date
Environmental:		Date
Other (specify):		Date
Other (specify):	Bill Zanetich, Maintenance	Date 10/01/07
District Prior Approval By:		Date
HQ (Issue Approve) By:	Ken Darby, HQ CCO Engineer	Date 10/2/07
Resident Engineer's Signature:		Date
		10-1-07

ESTIMATE OF COST

	THIS REQUEST	TOTAL TO DATE
ITEMS	$0.00	$0.00
FORCE ACCOUNT	$510,000.00	$650,000.00
AGREED PRICE	$0.00	$0.00
ADJUSTMENT	$0.00	$0.00
TOTAL	$510,000.00	$650,000.00

FEDERAL PARTICIPATION

☐ PARTICIPATING ☐ PARTICIPATING IN PART ☐ NONE
☐ NON-PARTICIPATING (MAINTENANCE) ☑ NON-PARTICIPATING

FEDERAL SEGREGATION (if more than one Funding Source or P.I.P. type)
☑ CCO FUNDED PER CONTRACT ☐ CCO FUNDED AS FOLLOWS

FEDERAL FUNDING SOURCE	PERCENT

ADA Notice: For individuals with sensory disabilities, this document is available in alternate formats. For information call: (916) 654-6410 or TDD (916) 654-3880 or write Records and Forms Management, 1120 N Street, MS-89, Sacramento, CA 95814.

CONTRACT CHANGE ORDER

Change Requested by: Engineer

CCO 69	Suppl. No. 0	Contract No. 04 - 0120R4	Road SF-80-12.6/13.2	FED. AID LOC.: ACBRIM-080-1(097)N

To: **CC MYERS INC**

You are directed to make the following changes from the plans and specifications or do the following described work not included in the plans and specifications for this contract. ***NOTE: This change order is not effective until approved by the Engineer.***

Description of work to be done, estimate of quantities and prices to be paid. (Segregate between additional work at contract price, agreed price and force account.) Unless otherwise stated, rates for rental of equipment cover only such time as equipment is actually used and no allowance will be made for idle time. This last percentage shown is the net accumulated increase or decrease from the original quantity in the Engineer's Estimate.

Extra Work at Lump Sum:

Generate and submit shop plans in accordance with the attached plans and specifications, and upon approval, procure the pumps, motors, and control panel for the sanitary sewer lift station that must be relocated to allow for the construction of Bent 52. This work also includes all freight charges and equipment manuals.

For this work, the Contractor will be compensated $111,280.00. This sum constitutes full compensation including markups for furnishing all labor, material, tools, equipment, and incidentals for doing the work involved in this change.

All payment clauses contained within this change order's specifications are amended such that all work performed under this change order will be compensated for as extra work at agreed lump sum as part of this change order.

No adjustment in contract time will be made since this work is not a controlling operation.

Total Cost of Extra Work at Lump Sum $111,280.00

Estimated Cost: Increase ☑ Decrease ☐ **$111,280.00**

By reason of this order the time of completion will be adjusted as follows: 0 days

Submitted by

Signature	Resident Engineer	Date
M. U. Anigol	MAHANTESH ANIGOL	5/25/07

Approval Recommended by

Signature	Area Construction Manager	Date
	JASON TOM	5/29/07

Engineer Approval by

Signature	Area Construction Manager	Date
Dennis Turchon	~~JASON TOM~~	5/30/07

We the undersigned contractor, have given careful consideration to the change proposed and agree, if this proposal is approved, that we will provide all equipment, furnish the materials, except as may otherwise be noted above, and perform all services necessary for the work above specified, and will accept as full payment therefor the prices shown above.

NOTE: If you, the contractor, do not sign acceptance of this order, your attention is directed to the requirements of the specifications as to proceeding with the ordered work and filing a written protest within the time therein specified.

Contractor Acceptance by

Signature	(Print name and title)	Date
	DANIEL E. HIMICK, PRESIDENT	8/1/07

CONTRACT NO. 04-0120R4
(Contract Change Order No.)

The special provisions contained herein have been prepared by or under the direction of the following Registered Persons.

CIVIL/ROADWAY

REGISTERED CIVIL ENGINEER 05/18/07

REGISTERED PROFESSIONAL ENGINEER
Johnny C. Kuo
No. C 60036
Exp. 06/30/08
CIVIL
STATE OF CALIFORNIA

CONTRACT NO. 04-0120R4

CONTRACT CHANGE ORDER NO 69

SHEET 2 OF 21

CONTRACT NO. 04-0120R4
(Contract Change Order No.)

The special provisions contained herein have been prepared by or under the direction of the following Registered Persons.

MECHANICAL

Kenneth J Harris 05/18/07

REGISTERED MECHANICAL ENGINEER

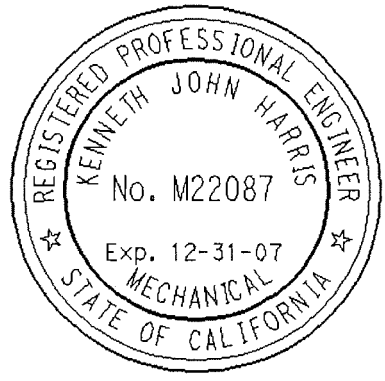

CONTRACT NO. 04-0120R4

CONTRACT CHANGE ORDER NO 69

SHEET 3 OF 21

10-2. SANITARY SEWER LIFT STATION

A sanitary sewer lift station shall be furnished and installed in conformance with the details shown on the plans and these special provisions.

A sanitary sewer lift station shall consist of shaft, duplex pumps with motors, pump enclosure, foundation, pipe, fittings, valves, controls and appurtenances necessary for the satisfactory operation of the sanitary sewer lift station. Service equipment and electrical equipment shall conform to the provisions in Section 10-3 of these special provisions. Incidental material or equipment not mentioned in these special provisions or shown on the plans, which may be necessary for completion and satisfactory operation of the sanitary sewer lift station, shall be furnished and installed.

All components of the sanitary sewer lift station shall be warranted for two years from date of first operation.

MATERIALS LIST AND DRAWINGS

In conformance with the provisions in Section 5-1.02, "Plans and Working Drawings," of the Standard Specifications, the Contractor shall submit, within 15 days after approval of the contract, a list of materials which the Contractor proposes to furnish and install for the sanitary sewer lift station together with the drawings and other data as specified below:

A. The materials list shall be a complete listing of the manufacturer, catalog number, size, and capacity of the manufactured articles. There shall be a working drawing for the sanitary sewer lift station showing the pump details, piping, and equipment as planned to be furnished and installed and for other materials to be fabricated for the installation. Directions for maintenance and adjustment of the pump shall be furnished to the Engineer as well as a manufacturer's certified performance characteristics curve diagram for the pump.
B. The data submitted shall be labeled with a descriptive title, project description and contract number of the project.

At least 4 copies of the data shall be initially submitted to the Engineer for approval. The Engineer will review the submitted data and will return to the Contractor either one set for correction or 2 sets that have been approved.

After approval, 6 sets of Operation and Maintenance Manuals for the sanitary sewer lift station shall be submitted.

The State shall not be liable for materials purchased or labor performed, prior to approval of the drawings and materials list, and will not be responsible for any delay to the Contractor pending review of the drawings and information submitted after the 15-day period mentioned.

PUMP AND MOTOR

Pumps shall be heavy-duty, submersible, non-clog, centrifugal, quick disconnect pumps. The pumps shall be a Flygt Model NP3102.090 with 5 hp motor. Power supplied will be 208 volt 3 phase.

Pump Construction

A. General: The pumps shall be designed to permit ground-level removal of pumping units from the wet well for inspection or service without disconnecting or disturbing the discharge piping. The pump connection shall be metal to metal. The design shall permit

the pumps when lowered into place to be automatically connected to the discharge piping by positively locking the volute in position to prevent any axial or lateral movement. There shall be no need for personnel to enter the wet well when pump inspection or service is required.

B. Piping, fittings, and Appurtenances: Each pump shall be furnished with quick-disconnect discharge elbow, AISI Type 316 stainless steel standard pipe rails, upper guide rail bracket, intermediate guide rail bracket, rail-guided lifting assembly and AISI Type 316 stainless steel chain of sufficient strength to raise and lower pump. All miscellaneous metal within the wet well shall be stainless steel. Anchor bolts shall be stainless steel.

C. Pump Castings: Castings and other major pump components shall be of grey cast iron, ASTM A-48, Class 35B, shall be of cast iron and free from blowholes, porosity, hard spots, shrinkage defects, cracks, and other injurious defects. All metal surfaces coming into contact with the sewage, other than stainless steel or brass, shall be protected by a factory applied spray coating of acrylic dispersion zinc phosphate primer with a polyester resin paint finish on the exterior of the pump. The casings shall be designed to permit replacement of wearing parts. Joints shall be properly sealed with Nitrile or Viton rubber O-rings and shall not leak under a test pressure equal to 50 percent greater than the pump shut-off pressure. Passageways shall permit smooth flow and shall be free from sharp turns and projections.

D. Impellers: Impellers shall be of (spheroidal graphite) gray iron class 35B, cast steel, or an alloy suitable for the service required. The impellers shall be smooth and free flowing and shall have sufficient clearance to permit 75 mm objects in the sanitary waste water that enter the pump to pass into the discharge pipe. Each impeller shall be accurately fitted and keyed, splined, or threaded on the shaft, and locked in such a manner that lateral movement will be prevented and reverse rotation will not cause loosening.

E. Balance: All rotating parts of the equipment shall be in such balance, mechanically and hydraulically, as to operate without excessive end thrust, vibration or noise.

F. Shafts: Shafts shall be steel, and be provided with alignment bearings.

G. Bearings: Bearings subject to submersion shall be ball bearings manufactured from high-grade bearing alloy.

H. Mechanical Seals: Each pump shall be equipped with tungsten carbide seals.

I. The Power cable shall be sized according to the NEC and ICEA standards and shall be of sufficient length to reach the junction box without the need of any splices. The outer jacket of the cable shall be oil resistant chloroprene rubber. The motor and cable shall be capable of continuous submergence underwater without loss of watertight integrity to a depth of 65 feet. The cable entry seal design shall preclude specific torque requirements to insure a watertight and submersible seal. The cable entry shall consist of a single cylindrical elastomer grommet, flanked by washers, all having a close tolerance fit against the cable outside diameter and the entry inside diameter and compressed by the body containing a strain relief function, separate from the function of sealing the cable. The assembly shall provide ease of changing the cable when necessary using the same entry seal. The cable entry junction chamber and motor shall be separated by a stator lead sealing gland or terminal board, which shall isolate the interior from foreign material gaining access through the pump top. Epoxies, silicones, or other secondary sealing systems shall not be considered acceptable.

J. Electrical motors: Submersible, and the following requirements:

1. Air filled (not oil filled) squirrel cage induction type
2. Service factor of 1.15 or better

3. Class F insulation, Class B temperature rise
4. Rated for 6 starts per hour
5. Listed by either UL or FM for Class 1, Division 1, Groups C and D hazardous locations
6. Suitable for operating either in free air or continuously submerged in sewage
7. Bearing B10 life 18,000 hours minimum
8. Tungsten carbide seals
9. Lower bearings of either the ball or roller type
10. Provide a moisture detection system and a motor winding thermostat system, connected to the station control panel.

These systems shall be complete, including all necessary interfaces, control panels, conduits, and wires, even though these may not be shown on the Drawings.

Miscellaneous Materials: Bolts, nuts, anchors, washers, and all other types of support necessary for the installation of the pumps and drive units shall be provided and shall be of stainless steel.

Shop Painting: Pump, motor, and accessories shall be factory applied and finish painted in accordance with the manufacturer's standard.

Tools and Spare Parts: The pumps shall be furnished with a full set of manufacturer's recommended spare parts and special tools and maintenance instructions.

PIPE, VALVES, JOINTS AND FITTINGS

Valves shall be the type shown on the plans and shall be Class 125 unless otherwise shown on the plans.

Gate valves shall be iron body, wedge gate type with bronze trim and non-rising stem.

Check valves shall have cast iron body and gate, flanged ends, and bronze trim. The valves shall be the spring-loaded lever type for nonslamming under the conditions of operation and shall have stainless steel spring and shaft.

Pipes and fittings for piping 4 NPS or greater shall be ductile iron.

Ductile iron pipe shall be restrained, push-on joint pipe conforming to ANSI/AWWA C151/A21.51.

Restrained push-on joints for ductile iron pipe shall conform to ANSI/AWWA C111/A21.11. The joints shall be boltless, non-compression, non-threaded with synthetic rubber gasket seals and have a positive-locking device to keep the connection from separating. The pipe joints shall be designed for a working pressure of 2,413 Kpa and be capable of deflecting after assembly. Fittings and flanges for ductile iron pipe shall conform to ANSI/AWWA C110/A21.10, except for the manufacturer's proprietary design dimensions for restrained push-on joint pipe.

Ductile iron pipe and fittings shall have cement mortar lining and seal coating conforming to ANSI/AWWA C104/A21.4. Pipe shall have an asphaltic coating and/or polyethylene encasement outside coating conforming to ANSI/AWWA C151/A21.51, and fittings shall have an asphaltic coating and/or polyethylene encasement outside coating conforming to ANSI/AWWA C110/A21.10.

Pipe supports

All anchor bolts, nuts, pipe clamps, and other fittings shall be suitable for the type and size of the lines or casing, and shall conform to the provisions in Section 75-1.03, "Miscellaneous Bridge Metal", of the Standard Specifications.

Locate pipe supports as indicated in the plans. Unless stated otherwise, use AISI type 316 stainless steel for fabrication of pipe supports and stainless steel heavy hex head bolts with

hardened washers and heavy hex nuts for bolted connections. Pipe supports shall be fabricated and installed according to MSS SP-58 and SP-69.

Dimensions and elevations for supports are the responsibility of the contractor and should be confirmed in the field prior to fabrication and installation.

Link Type Penetration Seal

The pipe to wall penetration closures shall be a modular mechanical type consisting of interlocking synthetic rubber links shaped to continuously fill the annular space between pipe and wall opening. Once expanded, the seal shall provide a watertight seal between pipe and wall. Pressure end plates shall be manufactured of glass reinforced plastic with a tensile strength of 186 mPa.

WET WELL

The wet well shall consist of precast wet well barrel sections as shown on the plans and in accordance with Section 70 1.02H "Precast Concrete Structures" of the Standard Specifications. The barrel sections shall conform to ASTM C-478 with single groove rubber joint gaskets. The concrete rings shall consist of Type II / Type V cement with appropriate corrosion protection against contaminated soils.

VALVE BOXES

Valve boxes shall conform to the provisions in Section 20-2.24, "Valve Boxes" of the Standard Specifications. A floor drain with deep trap shall be provided to drain the valve box to the wet well.

FOUNDATIONS

Concrete for foundations and pads shall be minor concrete and shall contain not less than 325 kg of portland cement per cubic meter. Type II / Type V cement with appropriate corrosion protection against contaminated soils shall be used for all concrete foundations and pads.

PRESSURE GAGES

Pressure gages shall be the dial type, shall be clear glycerin filled with a 65-mm minimum diameter weathertight epoxy case, and shall have accuracy within 3 percent of the full scale reading.

PUMP CONTROL

Panel

The pump control panel enclosure shall be 14 gauge 316 stainless steel. Panel shall have removable door, hinges constructed of 316 stainless steel and stainless steel hinge pins. Enclosure standards shall meet UL 508 for NEMA 4X. Enclosure shall comply with NEMA Type 4 and IEC 529, IP66. Back panel construction shall be 12 gauge steel. Swing panel shall maintain UL and NEMA ratings when installed. All operational status components shall be mounted on the swing panel. A single-phase 20 amp outlet shall be provided.

Controls

Station controls shall include the following:

A. Lockable external disconnect switch.
B. Motor starters, NEMA rated and sized for the next largest size (7.5 hp) pump motors.

CONTRACT NO. 04-012024
CONTRACT CHANGE ORDER NO 69
SHEET 7 OF 21

C. Circuit breakers, molded case and rated for short-circuit current.
D. Control power transformer with primary and secondary circuit breakers.
E. Transfer switch with receptacle to connect portable emergency generator. The switch enclosure shall be 316 stainless steel, NEMA 4X.

1. Transfer switch shall be manually operated, 100 Amp, 240 V, 3 phase.
2. Receptacle shall be four-wire, four-pole Crouse-Hinds Catalog AR1041 model M3 or equal.

F. MultitSmart Pump Control System. In order to maintain consistency in operation, control, programming, data collection, maintenance and spare parts, the pump control system shall be a MultiSmart Pump Controller and RTU as manufactured by MultiTrode Inc._USA, (561)994-8090, www.multitrode.com. The Controller shall interface with an existing OMNEX wireless system. The following boards shall be included:

1. Pump Control/General I/O
2. CPU Board
3. DSP Board
4. Motor Protection

G. Rechargeable battery system of sufficient voltage and capacity to maintain all electronic systems for 12 hours.
H. The level indicator shall be of the conductance probe type compatible with the MultiSmart Pump Control System. The probe shall be constructed from PVC tubing with molded sensor units at regular intervals along the probe. Each sensor unit shall be PVC injected to prohibit ingress of moisture, and the sensor material shall be stainless steel. The probe shall be suspended on its own cable and connected to a stainless steel hook which shall hang from a stainless steel angle containing a polyurethane squeegee pad positioned in the opening into the wet well, so that the probe can be removed without entering the wet well. The squeegee shall have a hole and slot, enabling the probe to be pulled through and cleaned. Probe cable shall be run in a separate conduit away from any high voltage cables. Ten sensors shall be spaced along the length of the probe assembly, each individually connected to a correspondingly numbered flexible cable. The molded sensor unit shall contain two sensors mounted on opposite sides of sensor unit. The probe shall be pressure injected with an epoxy resin to encapsulate all internal components and connections to form a rigid, homogenous unit. Each sensor unit containing the two sensors shall be rotated 90 degrees to the previous sensor unit to eliminate tracking between sensors. The cable shall be encoded with number and text along the entirety of the cable and at intervals not greater than 200mm for identification. The flexible cables shall be capable of supporting the weight of the probe and cable without the need for additional support. The cable shall be secured to the top of the probe by a synthetic rubber compression fitting.

INSTALLATION

Equipment shall be installed in accordance with manufacturer's instructions. Guide rails shall be secured in place. Each pump unit shall be connected to its corresponding discharge nozzle through the rail system. Smooth, correct operation of the lifting mechanism shall be demonstrated. Connect power and control cables and verify continuity and function.

CONTRACT NO. 624-012084 CONTRACT CHANGE ORDER NO 69 SHEET 8 OF 21

Piping shall be supported as shown on the plans and in conformance with these special provisions. Pipes shall be held in place by hangers, supports, pipe rests, anchors, sway braces, guides or other special hangers. Allowances shall be made for expansion and contraction. Pipes shall have hangers or supports every 3 meters. Pipes shall be supported at each joint. Vertical pipes shall be supported with clamps or straps. Horizontal and vertical piping shall be securely supported and braced to prevent swaying, sagging or flexing of joints.

Cleaning and closing of pipe

The interior of all pipes shall be cleaned before installation. All openings shall be capped or plugged as soon as the pipe is installed to prevent the entrance of any materials. The caps or plugs shall remain in place until their removal is necessary for completion of the installation.

TESTING

Piping through the valve box shall be tested in accordance with the provisions in Section 20-5.03H(1), "Method A", of the Standard Specifications, with no leakage or pressure drop. The Contractor shall furnish pipe anchorages to resist thrust forces occurring during testing. All leaks shall be repaired, and all defective materials shall be replaced by the Contractor at the Contractors expense.

All pressure testing and necessary repairing of lines shall be completed prior to backfilling, or otherwise covering the lines.

Each end of line shall be capped prior to and after the testing

The Control System shall be initially programmed in default condition. All available signals shall be connected to the Pump Control System.

In addition to its standard programming, the unit shall be configured to alarm through the OMNEX wireless system to be installed by others.

MEASUREMENT AND PAYMENT

Quantities of sanitary sewer lift station will be measured by the unit as determined from actual count in place.

The contract unit price paid for sanitary sewer lift station shall include full compensation for furnishing all labor, materials, tools, equipment, and incidentals, and for doing all the work involved in furnishing and installing the sanitary sewer lift station, complete in place, including foundations, pump enclosures, and excavation and backfill, as shown on the plans, as specified in the Standard Specifications and these special provisions, and as directed by the Engineer.

Contract No. 04-0120R4

04-SF-80 (KP 12.6/13.2)

CONTRACT PLAN
for
CONTRACT CHANGE ORDER No. 69

Date 05-18-07

INDEX OF SHEETS

SHEET No.	DESCRIPTION
1	Layout
2-3	Construction Details
4-5	Sanitary Sewer Plans
6	Summary of Quantities
7-10	Electrical Plans
STRUCTURAL PLANS	
11	South-South Detour - TIS 041 Pump Station

CONTRACT NO. 04-0120R4

CONTRACT CHANGE ORDER NO 69

SHEET 10 OF 21

DIST	COUNTY	ROUTE	KILOMETER POST TOTAL PROJECT	SHEET No	TOTAL SHEETS
04	SF	80	12.6/13.2	1	11

REGISTERED CIVIL ENGINEER 05/18/07

PLANS APPROVAL DATE

REGISTERED PROFESSIONAL ENGINEER Johnny C. Kuo No. C 60036 Exp. 06/30/08 CIVIL STATE OF CALIFORNIA

The State of California or its officers or agents shall not be responsible for the accuracy or completeness of electronic copies of this plan sheet.

Caltrans now has a web site! To get to the web site, go to: http://www.dot.ca.gov

PB AMERICAS, INC.
303 Second St., Suite 700N
San Francisco, CA 94107-1317

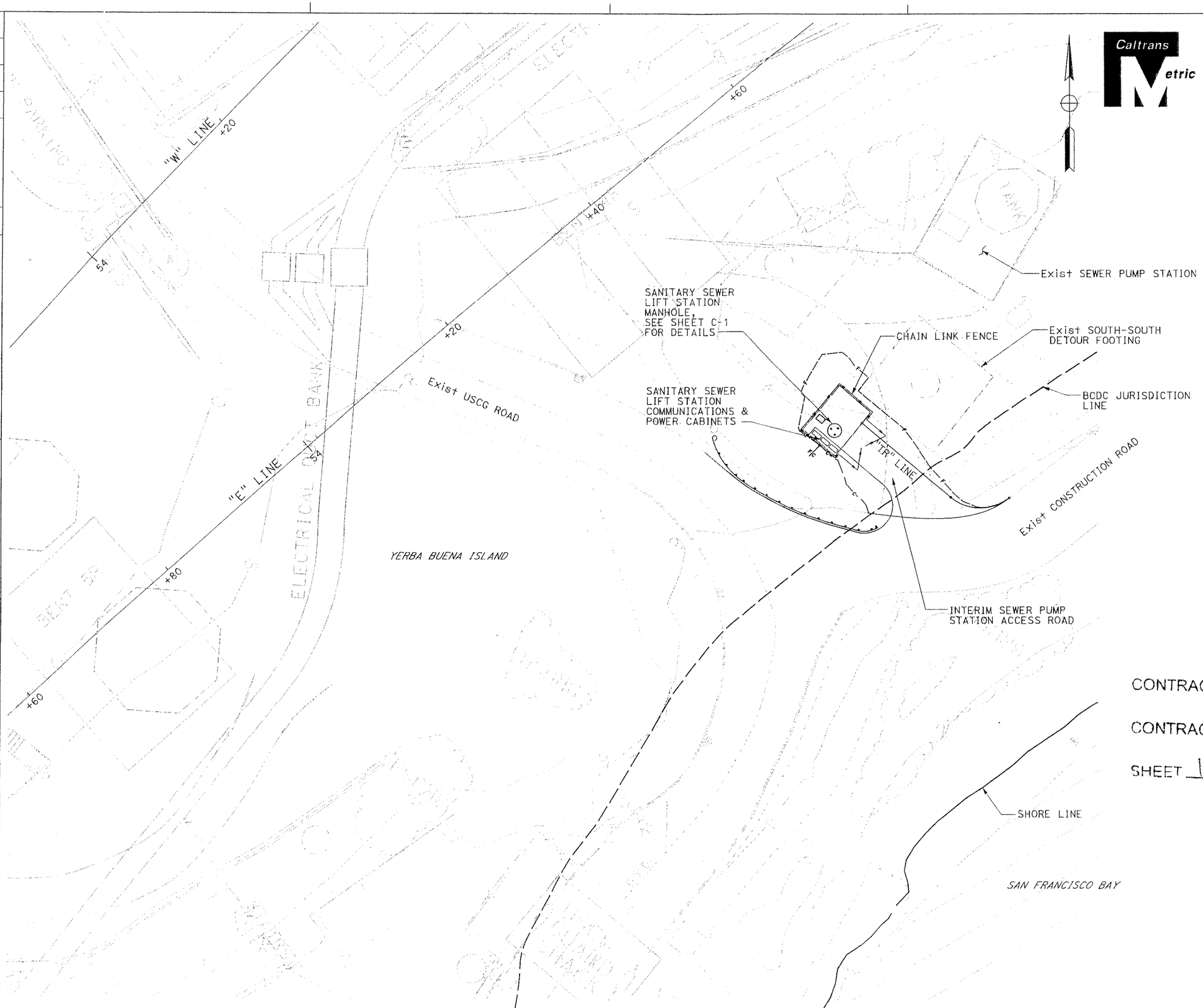

NOTE

1. FOR ADDITIONAL DETAIL SEE SHEETS C-1, SS-1 AND SSP-1.

ABBREVIATION

BCDC - BAY CONSERVATION AND DEVELOPMENT COMMISSION

CONTRACT NO. 64-0120R4

CONTRACT CHANGE ORDER NO 69

SHEET 11 OF 21

LAYOUT
SCALE: 1:200

L-1

STATE OF CALIFORNIA - DEPARTMENT OF TRANSPORTATION
Caltrans

DESIGN OVERSIGHT: HONG WONG
CALCULATED/DESIGNED BY
CHECKED BY
DATE
REVISED BY
DATE REVISED

LAST REVISION 00-00-00
DATE PLOTTED => 5/18/2007
TIME PLOTTED => $TIME

RELATIVE BORDER SCALE IS IN MILLIMETERS 0 20 40 60 80

DGN FILE => I:\13103\MS\SS_detour\Sewer Lift Station\sheet files\ea01.dgn
USERNAME => $USER

CU 04251

EA 0120R1

CURVE DATA						
No.	R	Δ	T	L	N	E
1	5.00	77°57'14"	4.05	6.80	647357.278	1836164.923
2	3.00	160°21'49"	17.34	8.40	647352.574	1836152.452

NOTE

INTERIM ACCESS ROAD GRADES TO BE FIELD VERIFIED AND ADJUSTED AS NECESSARY.

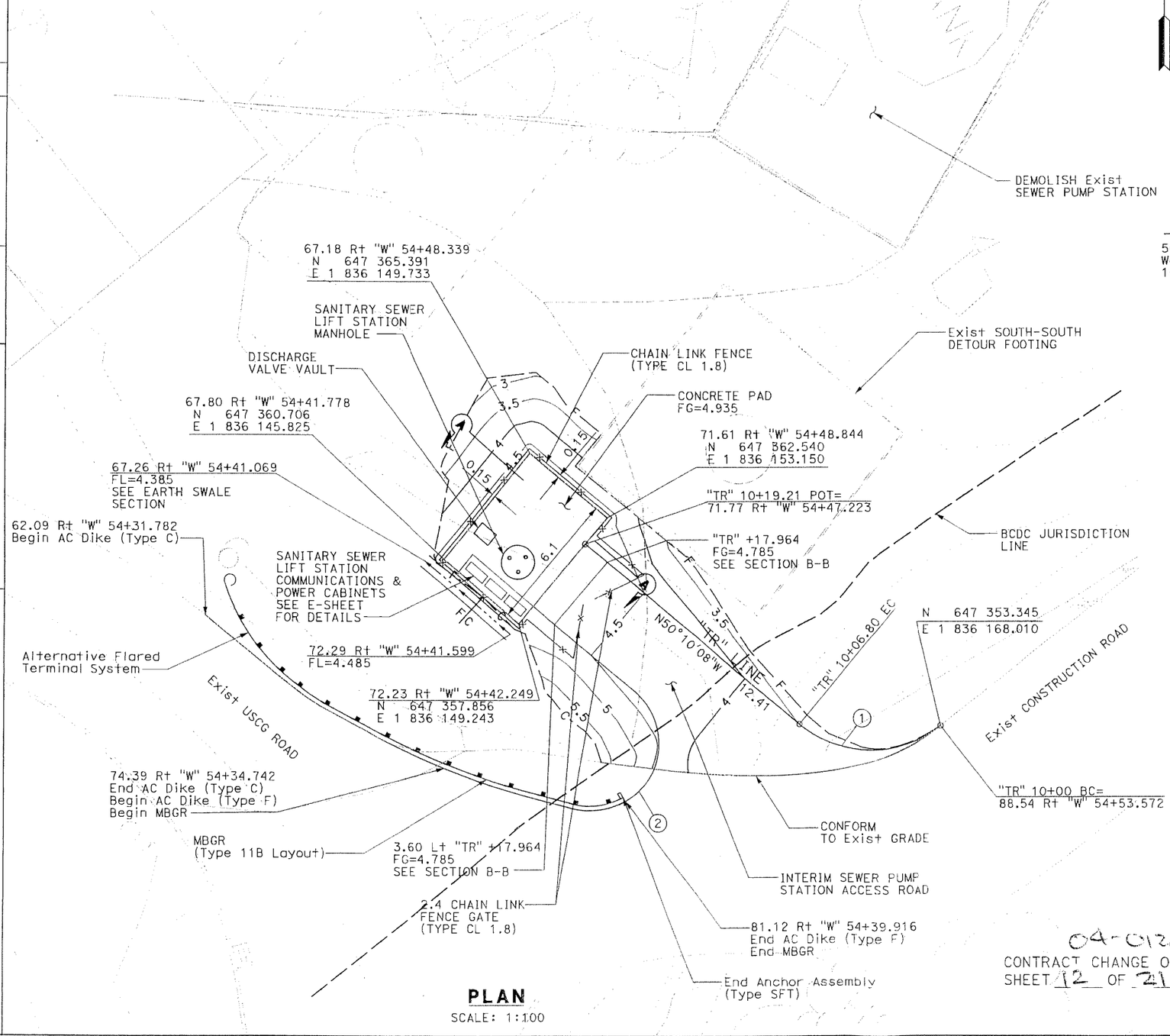

PLAN
SCALE: 1:100

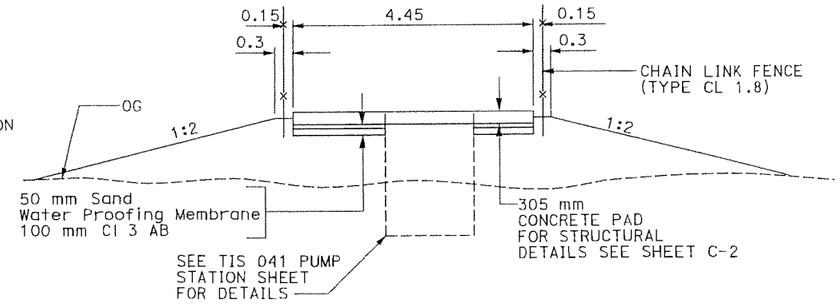

SECTION A-A
NO SCALE

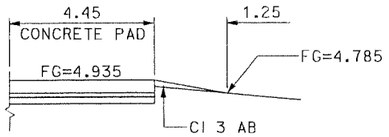

SECTION B-B
(PAVEMENT TRANSITION)
NO SCALE

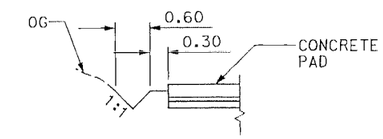

EARTH SWALE SECTION
NO SCALE

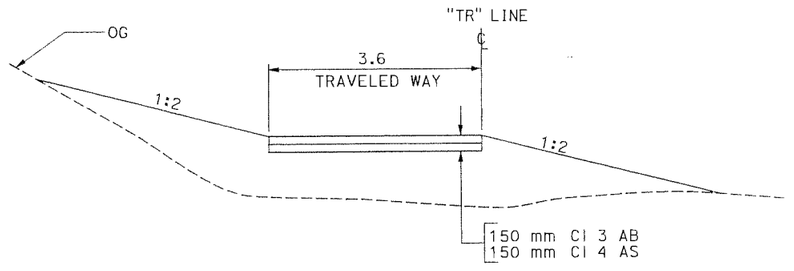

TYPICAL SECTION
(ACCESS ROAD)
NO SCALE

04-0120R4
CONTRACT CHANGE ORDER NO. 69
SHEET 12 OF 21

CONSTRUCTION DETAILS
SCALE AS NOTED

C-1

04	SF	80	12.6/13.2	2	11

REGISTERED CIVIL ENGINEER 05/18/07

PLANS APPROVAL DATE

REGISTERED PROFESSIONAL ENGINEER Johnny C. Kuo No. C 60036 Exp. 06/30/08 CIVIL STATE OF CALIFORNIA

The State of California or its officers or agents shall not be responsible for the accuracy or completeness of electronic copies of this plan sheet.

Caltrans now has a web site! To get to the web site, go to: http://www.dot.ca.gov

PB AMERICAS, INC.
303 Second St., Suite 700N
San Francisco, CA 94107-1317

STATE OF CALIFORNIA - DEPARTMENT OF TRANSPORTATION
Caltrans

DESIGN OVERSIGHT: HONG WONG
CALCULATED/DESIGNED BY
CHECKED BY
DATE
REVISED BY
DATE REVISED

LAST REVISION 00-00-00
DATE PLOTTED => 5/18/2007
TIME PLOTTED => $TIME

RELATIVE BORDER SCALE IS IN MILLIMETERS 0 20 40 60 80

DGN FILE => T:\13103\MS\SS_detour\Sewer Lift Station\sheet files\ga01.dgn
USERNAME => $USER

CU 04251

EA 0120R1

DIST	COUNTY	ROUTE	KILOMETER POST TOTAL PROJECT	SHEET No	TOTAL SHEETS
04	SF	80	12.6/13.2	3	11

REGISTERED CIVIL ENGINEER 05/18/07

PLANS APPROVAL DATE

REGISTERED PROFESSIONAL ENGINEER — Wee Shing Owyang — No. 24960 — Exp. 12/31/07 — CIVIL — STATE OF CALIFORNIA

The State of California or its officers or agents shall not be responsible for the accuracy or completeness of electronic copies of this plan sheet.

Caltrans now has a web site! To get to the web site, go to: http://www.dot.ca.gov

PB AMERICAS, INC.
303 Second St., Suite 700N
San Francisco, CA 94107-1317

Caltrans Metric

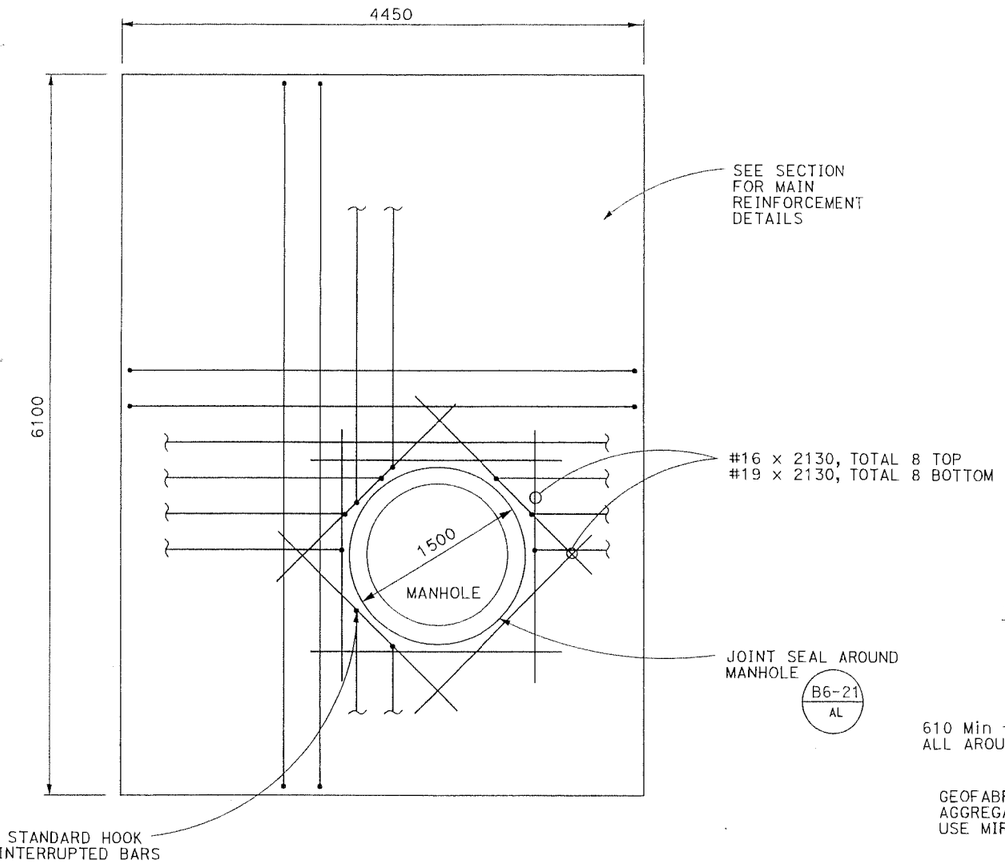

CONCRETE PAD PLAN VIEW

NO SCALE

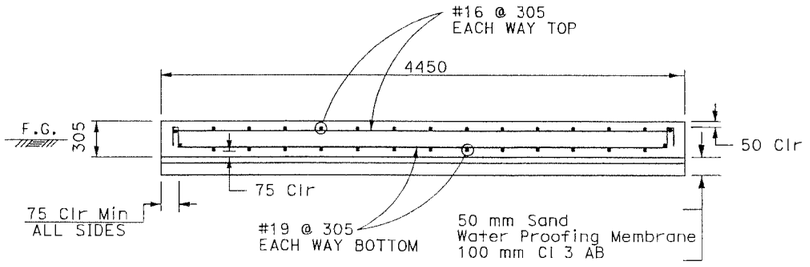

CONCRETE PAD SECTION VIEW

NO SCALE

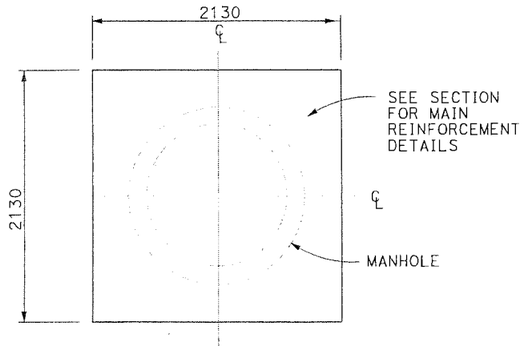

MANHOLE FOUNDATION SLAB PLAN VIEW

NO SCALE

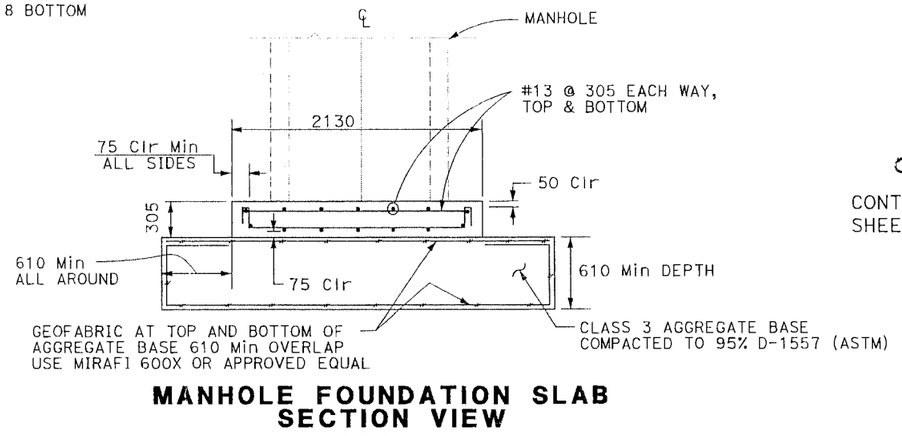

MANHOLE FOUNDATION SLAB SECTION VIEW

NO SCALE

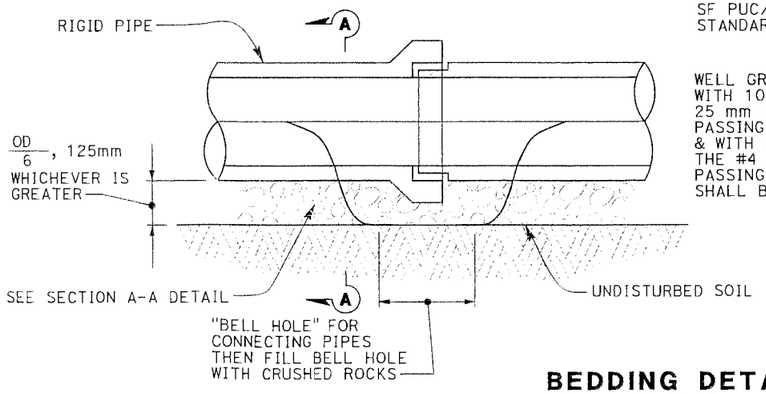

BEDDING DETAIL

NO SCALE

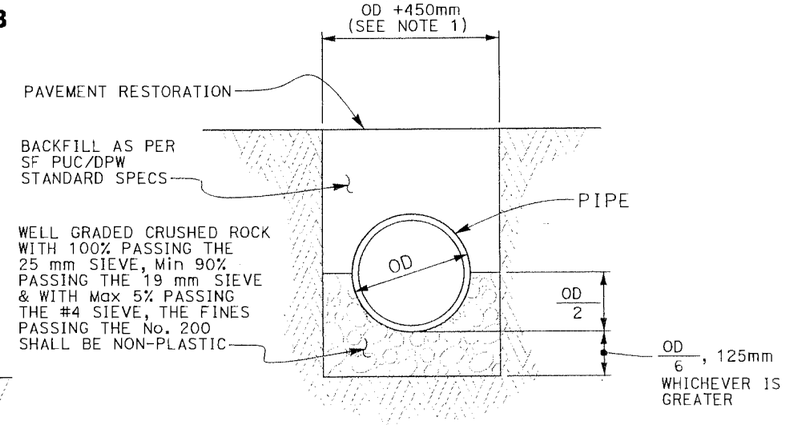

SECTION A-A

NOTES:

1. MAXIMUM TRENCH WIDTH SHALL BE LARGER OUTSIDE DIMENSION OF THE NEW OR EXISTING SEWER/STRUCTURE PLUS 900 mm.
2. ALL NEW SEWERS SHALL BE CONSTRUCTED ON CRUSHED ROCK BEDDING AS SHOWN ON BEDDING DETAIL UNLESS OTHERWISE NOTED.

04-0120R4

CONTRACT CHANGE ORDER NO. 69
SHEET 13 OF 21

CONSTRUCTION DETAILS

SCALE AS NOTED

C-2

ALL DIMENSIONS ARE IN MILLIMETERS UNLESS OTHERWISE NOTED

DATE	REVISED BY	DATE REVISED

CALCULATED/DESIGNED BY
CHECKED BY

DESIGN OVERSIGHT
HONG WONG

STATE OF CALIFORNIA - DEPARTMENT OF TRANSPORTATION
Caltrans

LAST REVISION 00-00-00
DATE PLOTTED => $DATE
TIME PLOTTED => $TIME

RELATIVE BORDER SCALE IS IN MILLIMETERS 0 20 40 60 80

DGN FILE => $REQUEST
USERNAME => $USER

CU 04251

EA 0120R1

DATE	REVISED BY	DATE REVISED

CALCULATED/DESIGNED BY

CHECKED BY

DESIGN OVERSIGHT

HONG WONG

STATE OF CALIFORNIA - DEPARTMENT OF TRANSPORTATION

Caltrans

04	SF	80	12.6/13.2	4	11

REGISTERED CIVIL ENGINEER 05/18/07

PLANS APPROVAL DATE

REGISTERED PROFESSIONAL ENGINEER — Johnny C. Kuo — No. C 60036 — Exp. 06/30/08 — CIVIL — STATE OF CALIFORNIA

The State of California or its officers or agents shall not be responsible for the accuracy or completeness of electronic copies of this plan sheet.

Caltrans now has a web site! To get to the web site, go to: http://www.dot.ca.gov

PB AMERICAS, INC.
303 Second St., Suite 700N
San Francisco, CA 94107-1317

N 647 381.746
E 1 836 105.558
22° HORIZ BEND

CONNECT TO Exist SANITARY SEWER LINE

"E" LINE

+40

+20

cbd

150 mm DIP SEWER PIPE FORCE MAIN (cc)

(dd) REMOVE SANITARY SEWER PIPE

REMOVE WATER PIPE

DISCHARGE VALVE VAULT

25 mm WATER PIPE

N 647 358.821
E 1 836 144.969
22.5° HORIZ BEND

3

N 647 365.054
E 1 836 143.827
45° HORIZ BEND

N 647 363.665
E 1 836 122.428
45° HORIZ BEND

(cc) 150 mm DIP SEWER PIPE FORCE MAIN

2

300 mm VCP

N 647 357.786
E 1 836 142.010
22.5° HORIZ BEND

1

(aa) 300 mm VCP

(bb) REMOVE SANITARY SEWER PIPE

(b) 150 mm CIP

TR 10+14.33
9.001 Lt
22.5° HORIZ BEND

Exist USCG ROAD

DEMOLISH Exist SEWER PUMP STATION (d)

NEW SSMH TG=4.785 (c)

Exist SOUTH-SOUTH DETOUR FOOTING

BCDC JURISDICTION LINE

NEW SEWER LIFT STATION

Exist SSMH TO BE REMOVE TG=4.685 (a)

"TR" LINE

300 mm abd VCP

Exist CONSTRUCTION ROAD

REMOVE SANITARY SEWER PIPE (e)

NOTE

1. ALL EXISTING SANITARY SEWERS ARE CLAY PIPE, UNLESS OTHERWISE NOTED.

ABBREVIATION

SSMH SANITARY SEWER MANHOLE

LEGEND

X SANITARY SEWER SYSTEM

(XX) SANITARY SEWER UNIT

//// REMOVE SEWER PIPE

04-0120R4
CONTRACT CHANGE ORDER NO. 69
SHEET 14 OF 21

SANITARY SEWER PLAN

SCALE: 1:100

SS-1

LAST REVISION 00-00-00 | DATE PLOTTED => 5/18/2007 | TIME PLOTTED => $TIME

RELATIVE BORDER SCALE IS IN MILLIMETERS 0 20 40 60 80

DGN FILE => T:\13103\MS\SS_detour\Sewer Lift Station\sheet files\ja01.dgn
USERNAME => $USER

CU 04251

EA 0120R1

DIST	COUNTY	ROUTE	KILOMETER POST TOTAL PROJECT	SHEET No	TOTAL SHEETS
04	Ala	80	12.6/13.2	5	11

REGISTERED CIVIL ENGINEER 05/18/07

PLANS APPROVAL DATE

REGISTERED PROFESSIONAL ENGINEER — Johnny C. Kuo — No. C 60036 — Exp. 06/30/08 — CIVIL — STATE OF CALIFORNIA

The State of California or its officers or agents shall not be responsible for the accuracy or completeness of electronic copies of this plan sheet.

Caltrans now has a web site! To get to the web site, go to: http://www.dot.ca.gov

PB AMERICAS, INC.
303 Second St., Suite 700N
San Francisco, CA 94107-1317

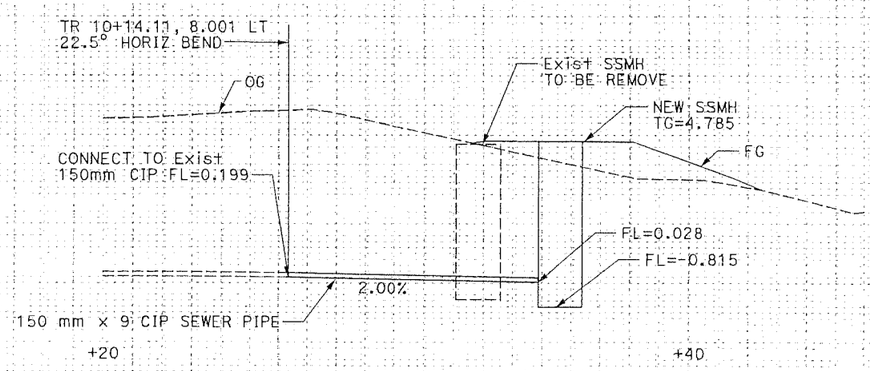

SANITARY SEWER SYSTEM No. 1 PROFILE

SCALE: 1:100 Horiz
1:100 Vert

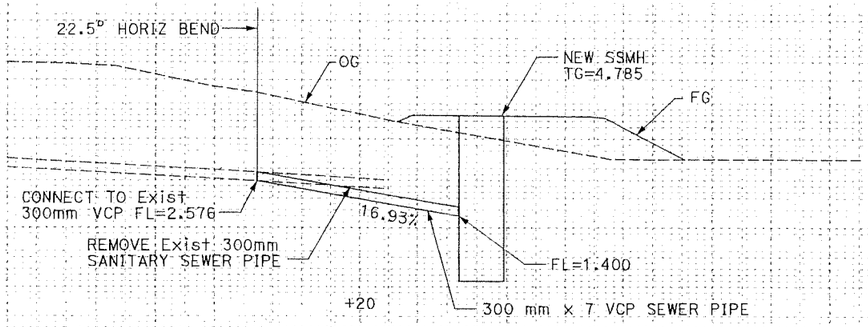

SANITARY SEWER SYSTEM No. 2 PROFILE

SCALE: 1:100 Horiz
1:100 Vert

09-0120R4

CONTRACT CHANGE ORDER NO. 69

SHEET 15 OF 21

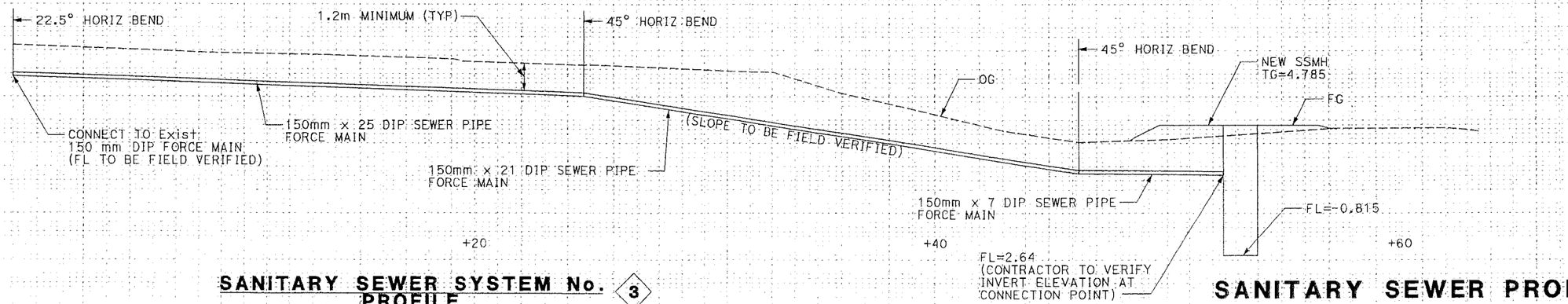

SANITARY SEWER SYSTEM No. 3 PROFILE

SCALE: 1:100 Horiz
1:100 Vert

SANITARY SEWER PROFILE

SCALE AS SHOWN

SSP-1

DESIGN OVERSIGHT — HONG WONG
CALCULATED/DESIGNED BY — CHECKED BY
DATE REVISED BY
DATE
STATE OF CALIFORNIA - DEPARTMENT OF TRANSPORTATION — Caltrans
Station
m^3 Exc Emb

LAST REVISION 00-00-00 — DATE PLOTTED => 5/18/2007 — TIME PLOTTED => %TIME

RELATIVE BORDER SCALE IS IN MILLIMETERS 0 20 40 60 80

DGN FILE => T:\13103\MS\SS_detour\Sewer Lift Station\sheet files\jb01.dgn
USERNAME => %USER

CU 04251 EA 0120R1

04	SF	80	12.6/13.2	11	11

REGISTERED MECHANICAL ENGINEER

PLANS APPROVAL DATE

REGISTERED PROFESSIONAL ENGINEER KENNETH JOHN HARRIS No. M22087 Exp. 12-31-07 MECHANICAL STATE OF CALIFORNIA

The State of California or its officers or agents shall not be responsible for the accuracy or completeness of electronic copies of this plan sheet.

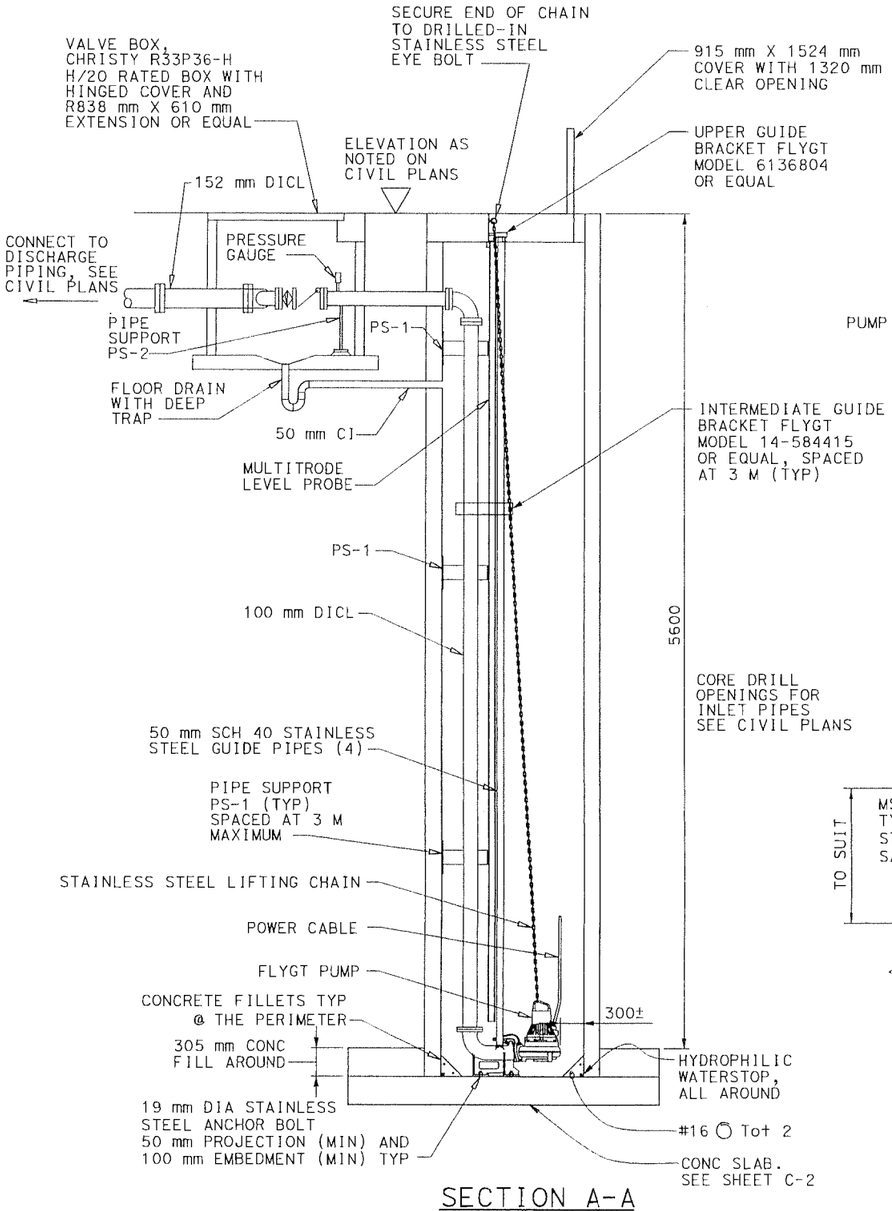

SECTION A-A

SCALE: 1 = 200

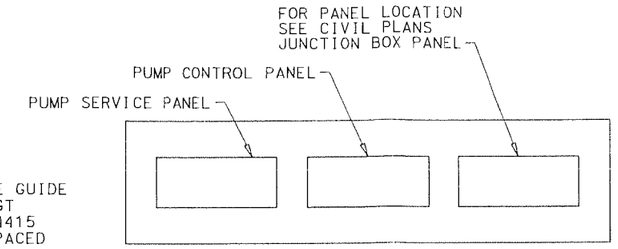

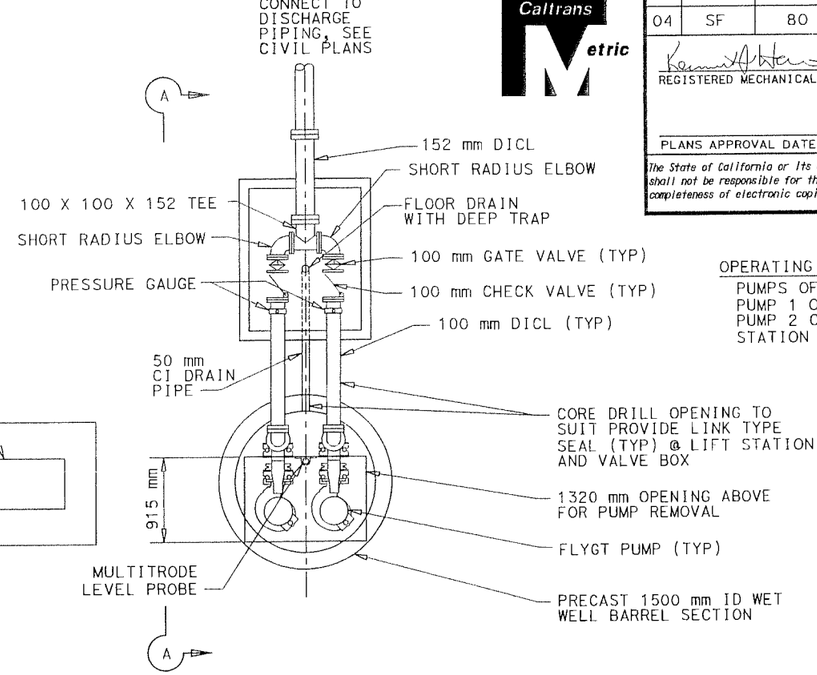

OPERATING POINTS:

PUMPS OFF	900 mm
PUMP 1 ON	2100 mm
PUMP 2 ON	2400 mm
STATION ALARM	2700 mm

NEW PUMP STATION PLAN

SCALE: 1 = 200

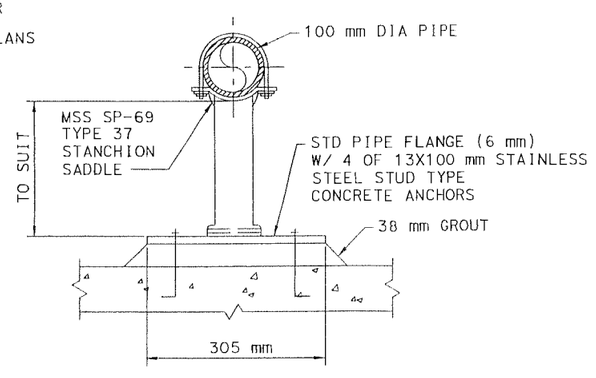

PIPE SUPPORT PS-2

SCALE : 1 = 50

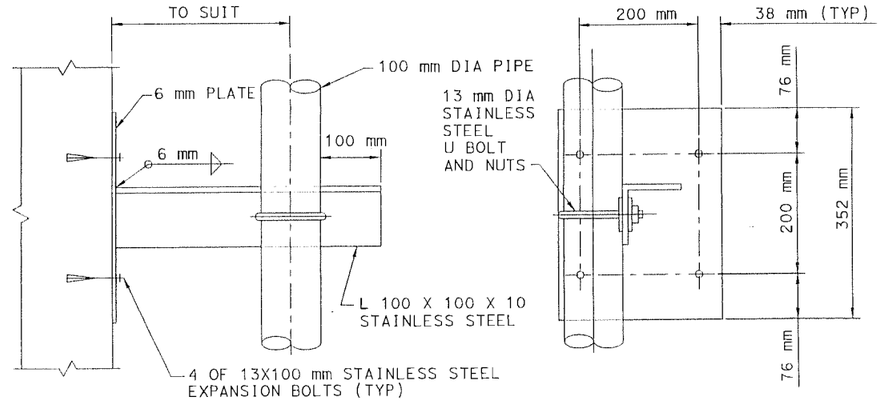

PIPE SUPPORT PS-1

SCALE : 1 = 50

04-0120R4

CONTRACT CHANGE ORDER NO. 69

SHEET 16 OF 21

ALL DIMENSIONS ARE IN MILLIMETERS UNLESS OTHERWISE SHOWN

DESIGN OVERSIGHT		DESIGN	BY K Harris	CHECKED B Melvin	PREPARED FOR THE STATE OF CALIFORNIA DEPARTMENT OF TRANSPORTATION
SIGN OFF DATE		DETAILS	BY K King	CHECKED	PROJECT ENGINEER
DESIGN DETAIL SHEET (METRIC) (REV. 3/1/98)		QUANTITIES	BY	CHECKED	ORIGINAL SCALE IN MILLIMETERS FOR REDUCED PLANS 0 10 20 30 40 50 60 70 80 90 100

BRIDGE NO.	34-0006(TEMP)
KILOMETER POST	12.6
CU	04251
EA	0120R1

SOUTH-SOUTH DETOUR

TIS 041 PUMP STATION

DISREGARD PRINTS BEARING EARLIER REVISION DATES →

REVISION DATES (PRELIMINARY STAGE ONLY) 2/19/07

SHEET 1 OF 1

FILE => T:\13103\MS\SS_detour\Sewer Lift Station\sheet files\m-01.dgn

USERNAME => $USER DATE PLOTTED => 5/18/2007 TIME PLOTTED => $TIME

DIST	COUNTY	ROUTE	KILOMETER POST TOTAL PROJECT	SHEET No	TOTAL SHEETS
04	SF	80	12.6/13.2	6	11

Caltrans Metric

REGISTERED CIVIL ENGINEER 05/18/07

PLANS APPROVAL DATE

REGISTERED PROFESSIONAL ENGINEER — Johnny C. Kuo — No. C 60036 — Exp. 06/30/08 — CIVIL — STATE OF CALIFORNIA

The State of California or its officers or agents shall not be responsible for the accuracy or completeness of electronic copies of this plan sheet.

Caltrans now has a web site! To get to the web site, go to: http://www.dot.ca.gov

PB AMERICAS, INC.
303 Second St., Suite 700N
San Francisco, CA 94107-1317

SANITARY SEWER QUANTITIES

SANITARY SEWER PLAN SHEET NO.	SYSTEM NO. ◇	UNIT NO. ○	300mm SANITARY SEWER VCP	150mm DIP FORCE MAIN	150mm CIP SANITARY SEWER PIPE	REMOVE SANITARY SEWER PIPE	SANITARY SEWER MANHOLE	REMOVE Exist SSMH	DEMOLISH SANITARY SEWER PUMP STATION	DESCRIPTION	STATION/OFFSET (FOR MANHOLES ONLY)	SYSTEM NO. ◇	UNIT NO. ○
			M	M	M	M	EA	EA	EA				
SS-1	1	a						1		Remove SSMH	Exist SSMH	1	a
		e				7				Remove 150 mm CIP			e
		b			9					150 mm CIP Sewer Pipe	TR 10+14.33 TO SSMH		b
		c					1			New SSMH	New SSMH		c
		d							1	Demolish Exist Sewer Pump Station	Exist Sewer Pump Station		d
SS-1	2	aa	7							300 mm VCP Sewer Pipe		2	aa
		bb				10				Remove 300 mm Sanitary Sewer			bb
SS-1	3	cc		53						150 mm DIP Force Main		3	cc
		dd				93				Remove 150 mm Force main & 200mm VCP			dd
	TOTAL		7	53	9	110	1	1	1				

(N): Not a seperate pay item, For Information Only

WATER LINE

LOCATION	25mm Water Pipe	Remove 25mm Water Pipe
	m	m
Sewer Lift Station	4	37
TOTAL	4	37

METAL BEAM GUARD RAILING

LOCATION	Alternative Flared Terminal System	End Anchor Assembly (Type SFT)	Metal Beam Guard Railing (Type 11B Layout)
	EA	EA	m
Sewer Lift Station	1	1	11
TOTAL	1	1	11

STRUCTURE EXCAVATION

LOCATIONS	DEPTH OF EXCAVATION	VOLUME OF EXCAVATION
	m	m3
Sewer Manhole	5	9
Total	5	9

PLACE AC DIKE

LOCATION	Place Asphalt Concrete Dike (Type C)	Place Asphalt Concrete Dike (Type F)
	m	m
Sewer Lift Station	12	11
TOTAL	12	11

ROADWAY QUANTITIES

LOCATION	ASPHALT CONCRETE (TYPE A)	CLASS 3 AGGREGATE BASE	CLASS 4 AGGREGATE SUBBASE	50 mm SAND	ROADWAY EXCAVATION	EMBANKMENT (N)
	TONNE	m3	m3	m3	m3	m3
SEWER LIFT STATION ACCESS ROAD	0.68	17.4	8	1.3	7	48
TOTAL	0.68	17.4	8	1.3	7	48

FENCE

LOCATION	CHAIN LINK FENCE (TYPE CL 1.80)	2.4 CHAIN LINK GATE (TYPE CL 1.80)
	M	EA
SEWER LIFT STATION	23	2
TOTAL	23	2

CONCRETE SLAB

LOCATION	Concrete	Rebars			Joint Sealant	Water Proofing Membrane	Geofabric
		#13	#16	#19			
	m3	m	m	m	m	m2	m2
Sewer Lift Station	9.7	59.7	179.3	188.9	37	25.4	37.3
TOTAL	9.7	59.7	179.3	188.9	37	25.4	37.3

04-0120R4
CONTRACT CHANGE ORDER NO. 69
SHEET 17 OF 21

SUMMARY OF QUANTITIES

Q-1

DESIGN OVERSIGHT — HONG WONG
CALCULATED/DESIGNED BY — CHECKED BY
DATE — REVISED BY — DATE REVISED
STATE OF CALIFORNIA - DEPARTMENT OF TRANSPORTATION — Caltrans

LAST REVISION 00-00-00 — DATE PLOTTED => &DATE — TIME PLOTTED => &TIME

RELATIVE BORDER SCALE IS IN MILLIMETERS 0 20 40 60 80

DGN FILE => &REQUEST
USERNAME => &USER

CU 04251

EA 0120R1

INDEX TO ELECTRICAL PLAN

DWG. NO.	DESCRIPTION
E-1	GENERAL NOTES, SYMBOLS AND ABBREVIATIONS
E-2	SIGNAL AND LIGHTING SOUTH-SOUTH DETOUR PUMP STATION
E-3	PARTIAL ONE LINE DIAGRAM SOUTH-SOUTH DETOUR PUMP STATION
E-4	CITY OF SAN FRANCISCO STREET LIGHT TYPICAL DETAIL SOUTH-SOUTH DETOUR PUMP STATION

PROJECT SYMBOLS:

(See ES-1A and ES-1B for additional Standard Symbols)

- Surface mounted Special Receptacle.
- Electrical Equipment or Device
- 30A — Disconnect switch, size as noted
- Package Pump Controller
- (1) — Sheet notes, applicable only to the drawings.
- [1] — Project notes, applicable for all drawings.
- —(C) — City Standard Electrolier

ABBREVIATIONS

(See ES-1A and ES-1B for additional Standard Symbols)

A, Amp	Ampere
BKR	Breaker
CEC	California Electrical Code
CU	Copper
(E), Exist	Existing
G, GND, Gnd	Ground
SFPUC	San Francisco Public Utility Commission
kV	Kilovolt
kVA	Kilovolt-Ampere
MTS	Manual Transfer Switch
mh	Existing manhole
(N)	New
PB	Pullbox
VIF	Verify in Field
W	Wire
WP	Weatherproof
YBI	Yerba Buena Island
(R)	RELOCATED

GENERAL NOTES

1. Conduit routing is diagramatic. Pull box location shall be located as shown on plans. The contractor shall provide additional pull boxes as required. Exact locations of equipment and devices may be adjusted depending on field conditions or by the engineer.
2. Minimum size of conduit shall be 21C. Exposed conduit shall be PVC coated galvanized rigid steel.
3. Conduit fitting for 78 mm conduits and larger shall have a 610 minimum bending radius.
4. All equipment and devices shall be provided with wire ground.
5. All feeders and branch circuits shall be provided with ground wire.
6. Contractor shall label all conductors and cables per wiring diagrams.
7. All E-sheets are accurate for electrical work only.
8. All existing equipment shall remain in place unless otherwise noted.
9. Locations of conduits, pull boxes and other equipment shown on the plan are approximate and may be changed to suit field conditions.
10. The contractor shall call Underground Service Alert (USA) at (800) 642-2444, 48 hours prior to all excavation.
11. All exposed circuit or conductor connections shall be protected with a corrosion coating.
12. Contractor to verify in field existing live circuit prior to cutting and splicing.
13. Pullboxes installed on the shoulder of Roadway shall have Traffic Cover.

Caltrans Metric

			TOTAL PROJECT	NO	SHEETS
04	SF	80	12.6/13.2	7	11

Carol Light — 5/18/07
REGISTERED ELECTRICAL ENGINEER — DATE

PLANS APPROVAL DATE

REGISTERED PROFESSIONAL ENGINEER — CAROL LIGHT — No. 10145 — Exp. 09/30/07 — ELECTRICAL — STATE OF CALIFORNIA

PARSONS BRINCKERHOFF QUADE & DOUGLAS, INC.
303 Second St., Suite 700N
San Francisco, CA 94107-1317

SILVERMAN & LIGHT
1201 PARK AVENUE - SUITE 100
EMERYVILLE, CA 94608-3632

The State of California or its officers or agents shall not be responsible for the accuracy or completeness of electronic copies of this plan sheet.

Caltrans now has a web site! To get to the web site, go to http://www.dot.ca.gov

04-0120R4
CONTRACT CHANGE ORDER NO. 69
SHEET 18 OF 21

GENERAL NOTES AND SYMBOLS
SOUTH-SOUTH DETOUR PUMP STATION

E-1

REVISED BY	DATE	DATE REVISED

CALCULATED/ DESIGNED BY	CHECKED BY
BJ	CL

DESIGN OVERSIGHT: Hong Wong

STATE OF CALIFORNIA - DEPARTMENT OF TRANSPORTATION — Caltrans

LAST REVISION 00-00-00 — DATE PLOTTED => 5/18/2007 — TIME PLOTTED => $TIME

THIS PLAN ACCURATE FOR ELECTRICAL WORK ONLY

FOR REDUCED PLANS ORIGINAL SCALE IS IN MILLIMETERS 0 20 40 60 80

DGN FILE => T:\13103\WS\SS_detour\Sewer Lift Station\sheet files\us01.dgn
USERNAME => $USER

CU 04251 — EA 0120R1

DIST	COUNTY	ROUTE	KILOMETER POST TOTAL PROJECT	SHEET No	TOTAL SHEETS
04	SF	80	12.6/13.2	8	11

Carol Light — REGISTERED ELECTRICAL ENGINEER — 5/18/07 DATE

CAROL LIGHT No. 10145 Exp 09/30/07 ELECTRICAL — REGISTERED PROFESSIONAL ENGINEER — STATE OF CALIFORNIA

PLANS APPROVAL DATE

PARSONS BRINCKERHOFF QUADE & DOUGLAS, INC.
303 Second St., Suite 700N
San Francisco, CA 94107-1317

SILVERMAN & LIGHT
1201 PARK AVENUE - SUITE 100
EMERYVILLE, CA 94608-3632

The State of California or its officers or agents shall not be responsible for the accuracy or completeness of electronic copies of this plan sheet.

Caltrans now has a web site! To get to the web site, go to http://www.dot.ca.gov

Caltrans Metric

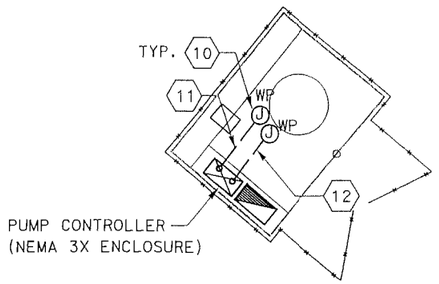

TIS-041 PUMP STATION

SCALE: 1:100

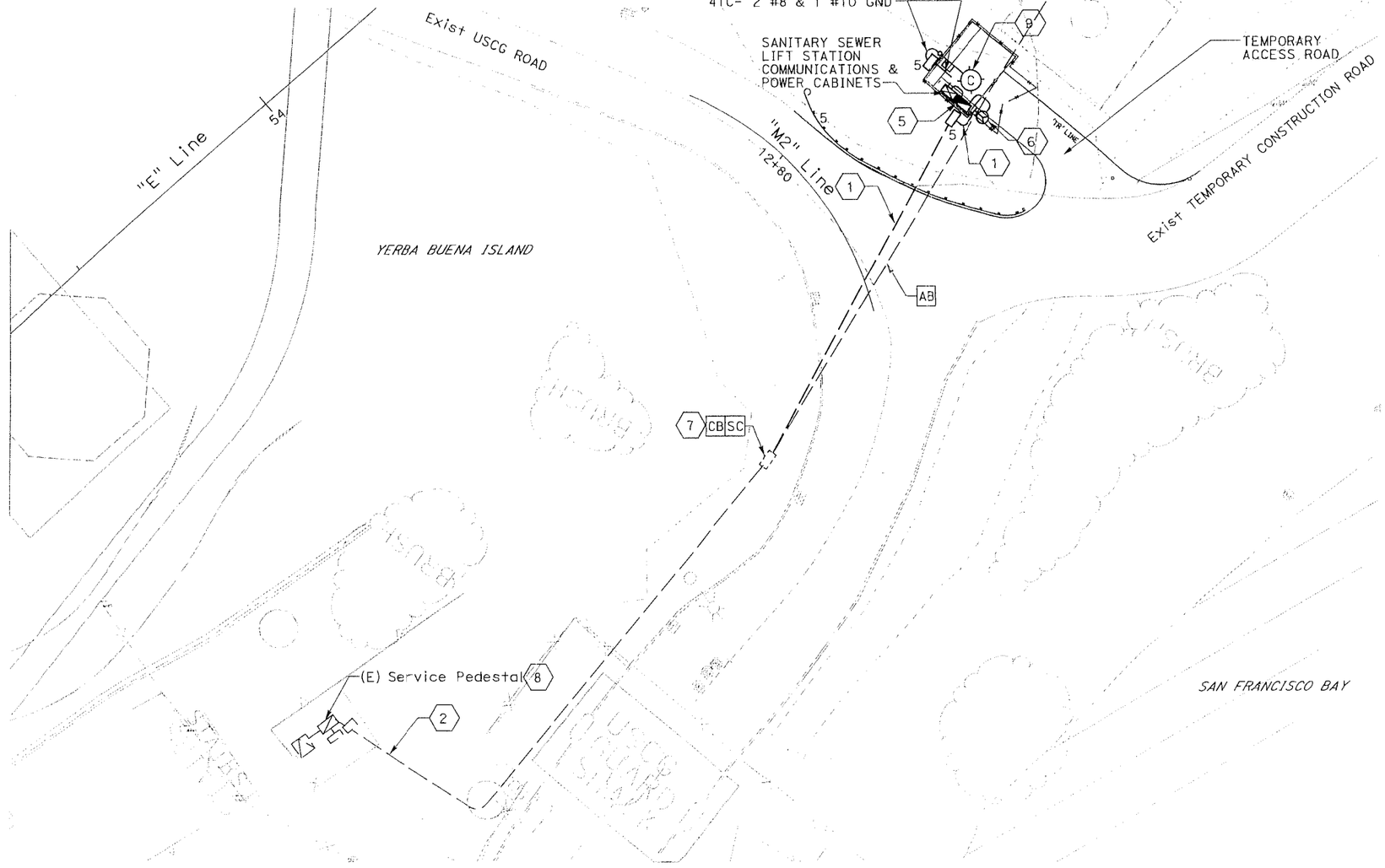

SHEET NOTES:

1. Install new 41C, 4 #1/0, 1 #6 Ground (208 V, 3-phase, Sewer Lift pump).
2. Existing 41c, with 4 #2/0 and #6 Ground.
3. Disconnect existing Sewer Lift Pump controller from existing feeder after new pump is operational. Turn over existing pump controller cabinets to SFPUC water waste division.
4. Install new free-standing pad mounted Nema 4X Lift Pump Controller Panel Enclosure. Controller Enclosure is furnished by the Vendor. Mounting detail by Supplier.
5. Install new stainless steel free-standing pad mounted Nema 4X Enclosure with non-fuseable disconnect and Monual transfer switch mounted on the interior of the enclosure.
6. Install New 100 Amp, 3-pole, 4-wire, 600 VAC, Heavy Duty Breaking Receptacle (for portable generator connection) with spring door "Crouse-Hinds catalog #AR-1041". Mount receptacle on the left side of the enclosure at +36" above finished grade.
7. Splice new conductors to existing conductors only when the new Lift Pump Station is ready to be energized. Old Lift station to remain in operational until new Pump Station is energized and functional. Contractor to field verify exact location of existing pullbox.
8. At existing service pedestal, replace existing 200 A, 3-Pole circuit breaker with 100 A, 3-pole circuit breaker. Type and interrupting capacity to match existing.Schedule replacement when new pump is ready for operation and coordinate down time with SFPUC.
9. Install Permanent City of San francisco Standard Cobra style light pole with bracket arm assemblies as shown on E-4 with 200 watts clear HPS lamp and with integral 120 V ballast. Install new fused splice connector in adjacent pullbox. Install new PEU on top of the electrolier. Locate light pole as directed by the Engineer. See Caltrans standard details ES-13A and ES13-B for more information.
10. NEMA 3X Junction Box. Coordinate with the Pump Vendor for size and location prior to installation.
11. Provide conduit(s) from Pump controller to Juction Box (for Controls). Coordinate with the Pump Vendor for size and quantity prior to installation.
12. Provide conduit(s) from Pump controller to Juction Box (for pump motor). Coordinate with the Pump Vendor for size and quantity prior to installation.

04-0120R4
CONTRACT CHANGE ORDER NO. 69
SHEET 19 OF 21

ELECTRICAL WORK
SOUTH-SOUTH DETOUR PUMP STATION

SCALE: 1:200

E-2

REVISED BY	DATE REVISED
BJ	CL

CALCULATED/DESIGNED BY
CHECKED BY

DESIGN OVERSIGHT: Hong Wong

STATE OF CALIFORNIA - DEPARTMENT OF TRANSPORTATION — Caltrans

LAST REVISION 00-00-00 | DATE PLOTTED => 5/18/2007 | TIME PLOTTED => $TIME

THIS PLAN ACCURATE FOR ELECTRICAL WORK ONLY

FOR REDUCED PLANS ORIGINAL SCALE IS IN MILLIMETERS 0 20 40 60 80

DGN FILE => T:\13103\WS\SS_detour\Sewer Lift Station\sheet files\ua02.dgn
USERNAME => $USER

CU 04251 | EA 0120R1

DIST	COUNTY	ROUTE	KILOMETER POST TOTAL PROJECT	SHEET No	TOTAL SHEETS
04	SF	80	12.6/13.2	9	11

Caltrans Metric

Carol Light — 5/18/07
REGISTERED ELECTRICAL ENGINEER — DATE

PLANS APPROVAL DATE

REGISTERED PROFESSIONAL ENGINEER — CAROL LIGHT — No. 10145 — Exp. 09/30/07 ELECTRICAL — STATE OF CALIFORNIA

PARSONS BRINCKERHOFF QUADE & DOUGLAS, INC.
303 Second St., Suite 700N
San Francisco, CA 94107-1317

SILVERMAN & LIGHT
1201 PARK AVENUE - SUITE 100
EMERYVILLE, CA 94608-3632

The State of California or its officers or agents shall not be responsible for the accuracy or completeness of electronic copies of this plan sheet.

Caltrans now has a web site! To get to the web site, go to http://www.dot.ca.gov

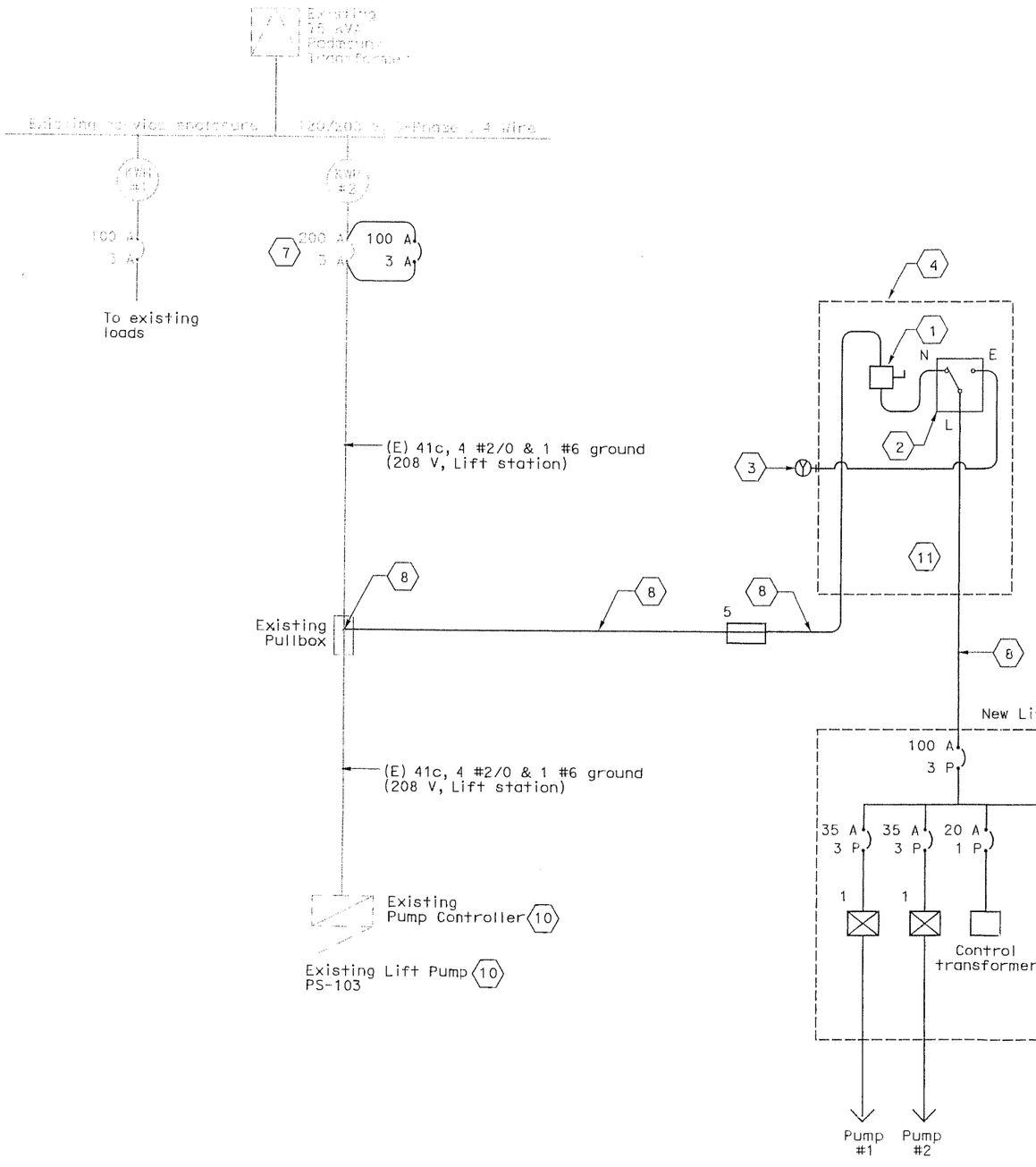

120/208 V SERVICE ENCLOSURE NO.B WIRING DIAGRAM

NO SCALE

SHEET NOTES:

1. 100 A, 3-Pole, 4-wire Main Non-Fusible Disconnect switch mounted on the interior of the Nema 4X Enclosure.
2. 100 A, 208 V, 3-pole, 4-Wire Manual Transfer Switch mounted on the interior of the Nema 4X enclosure.
3. "Crouse-Hinds Cat # AR1041" 100 Ampere, 4-pole, 4-wire Heavy Duty Circuit breaking receptacle with Spring door. Surface mount receptacle on the exterior of the panel at +36" above concrete pad.
4. Free-standing Pad Mounted Nema 4X Panel Enclosure for 200A manual transfer switch and non-fuseable 200 A , 3-pole disconnect switch.
5. Contractor to verify in field exact location of existing Pullbox.
6. See Contract Plan for Cables, Conduit Size and Quantity.
7. Replace existing 200 A-3pole circuit breaker with new 100 A-3pole Circuit Breaker.
8. Install 41C with 4 #1/0 and 1 #6 Ground.
9. Free-standing Pad Mounted Nema 4X Pump Control Panel Enclosure. See specs for more information. Control panel and wiring within the enclosure is by the Vendor except that contractor shall make connection to main circuit breaker and to the light pole. Wiring to Pump motors and to the level switches by Vendor.
10. Disconnect existing Lift pump cotroller and turn over to SFPUC Waste Water Division. Remove and scrap all related conduit and wire after new permanent Lift Pump is installed.
11. Provide two 19mm x 3 M UL listed copper-clad ground rods installed a minimum 1.8 M apart in undesturbed earth. Provide #6 bare copper connection between ground rods with connection to concrete pad structural steel at two points and a #6 pigtail connection to each enclosure.

04-0120R4
CONTRACT CHANGE ORDER NO. 69
SHEET 20 OF 21

ELECTRICAL DETAILS
ONE LINE DIAGRAM
SOUTH-SOUTH DETOUR PUMP STATION

E-3

CALCULATED/ DESIGNED BY	BJ	DATE	REVISED BY	DATE REVISED
CHECKED BY	CL			

DESIGN OVERSIGHT: Hong Wong

STATE OF CALIFORNIA - DEPARTMENT OF TRANSPORTATION
Caltrans

LAST REVISION 00-00-00 — DATE PLOTTED => 5/18/2007 — TIME PLOTTED => $TIME

THIS PLAN ACCURATE FOR ELECTRICAL WORK ONLY

FOR REDUCED PLANS ORIGINAL SCALE IS IN MILLIMETERS 0 20 40 60 80

DGN FILE => T:\13103\WS\SS_detour\Sewer Lift Station\sheet files\ua03.dgn
USERNAME => $USER

CU 04231 — EA 0120R1

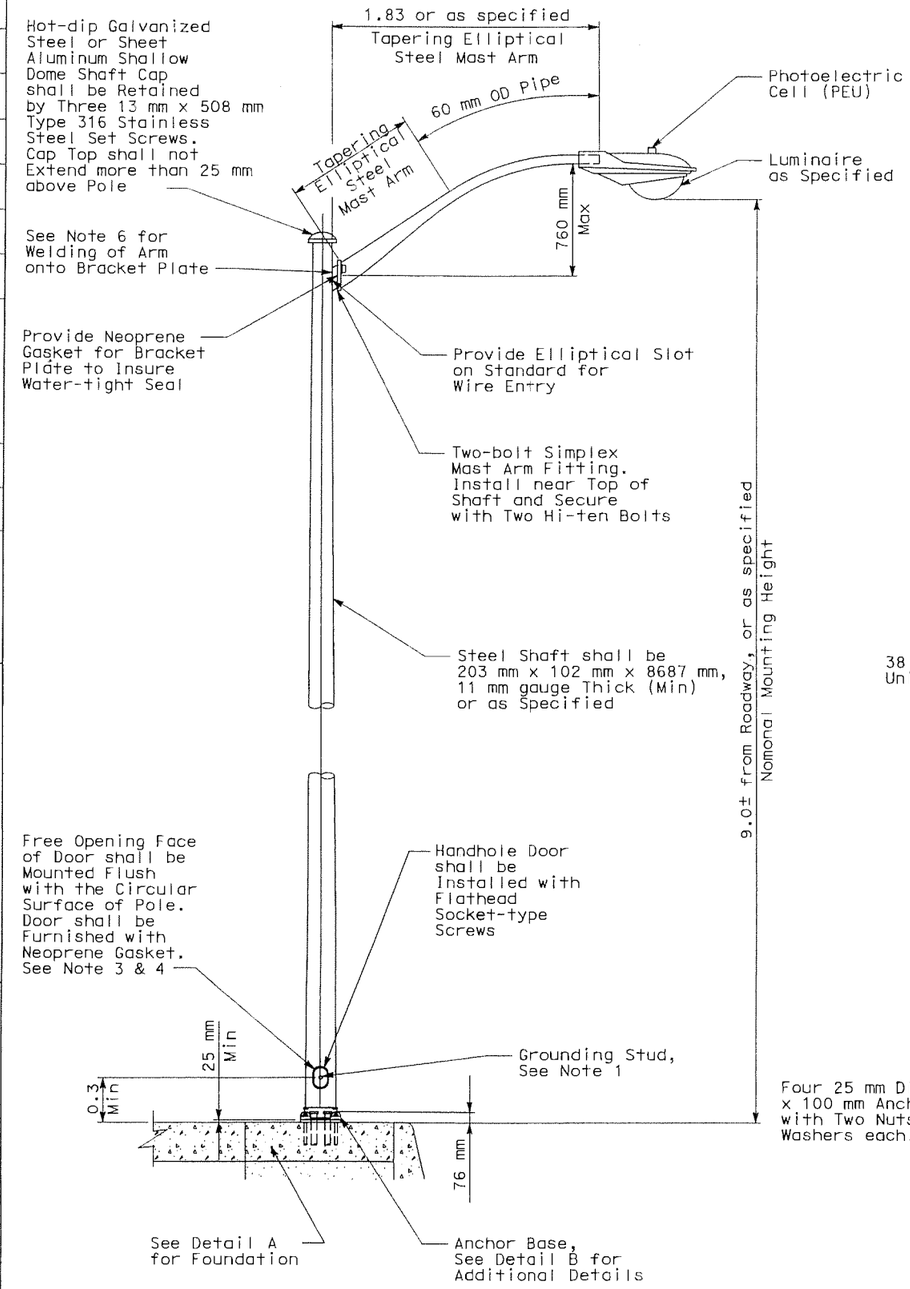

SIDE ELEVATION

DETAIL A

STREET LIGHT ON STEEL SHAFT WITH ELLIPTICAL BRACKET ARM

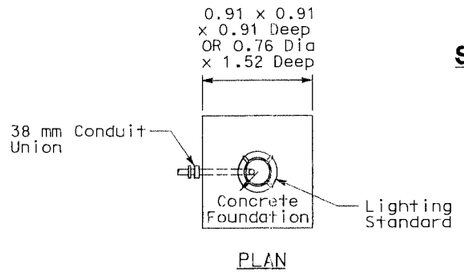

PLAN

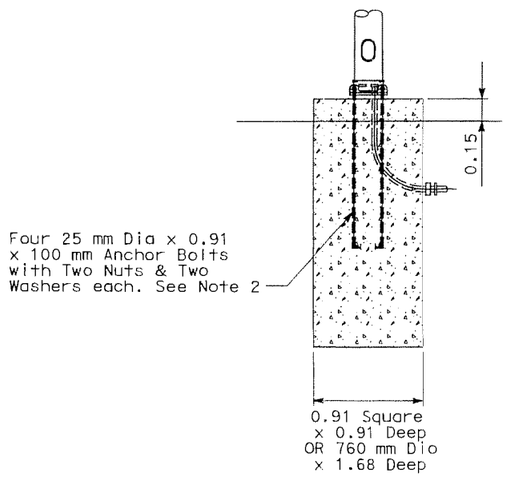

ELEVATION

DETAIL A

FOUNDATION FOR STREET LIGHT IN UNPAVED AREA

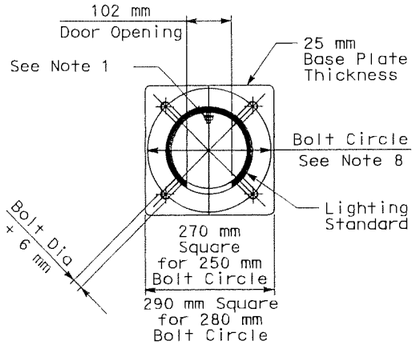

PLAN

DETAIL B

STANDARD ANCHOR BASE

04-0120R4

CONTRACT CHANGE ORDER NO. 69

SHEET 21 OF 21

NOTES

1. Ground Stud (Welded to Interior Surface of Shaft Opposite Door Opening). Stud shall be 6 mm x 508 mm (Continuosly Threaded) x 19 mm and shall be Furnished with A Type 316 Stainless Steel Nut and A Stainless Steel Shokeproof Washer.
2. Each Anchor Bolt-Threaded Top 200 mm.
3. The Standard, Handhole Cover, Mast Arm, and Anchor Bolts with Nuts & Washers, shall be Hot-dip Galvanized after Fabrication.
4. The Handhole Cover or Door shall have the same Radius of Curvature as the Shaft and when Installed, shall Form a Symmetrical Appearance with the Shaft.
5. The Tapering Elliptical Section shall not be more than Two-thirds the Length of the Mast Arm and shall Taper to the External Diameter of 50 mm Pipe.
6. All Exposed Welds shall be Ground Smooth and shall Conform to Contours of Adjacent Surfaces. All Welds shall have a Finished Depth of 10 mm.
7. Door or Handhole Cover shall be Securely Retained in Place with Two 6 mm x 500 mm Stainless Steel Screws.
8. For Shafts of 7.6 m or Less in Length, the Bolt Circle shall be 250 mm, unless otherwise Noted. For Shafts more than 7.6 m in Length, the Bolt Circle Diameter shall be 280 mm.
9. The Threads of All Fasteners shall be Coated with an Approved Industrial Type of Water-proof Grease Lubricant Containing a High Content of Graphite.
10. The Door or Handlehole Cover Gasket shall be Mounted to the Cover with an Approved Type of Automotive Engine Gasket Cement. The Non-cemented Surface of the Gasket shall be Coated with a Silicone Impregnated Rubber Lubricant.

CITY OF SAN FRANCISCO LIGHT POLE TYPICAL DETAIL

SOUTH-SOUTH DETOUR PUMP STATION

SCALE: 1:20

ALL DIMENSIONS ARE IN METERS UNLESS OTHERWISE SHOWN

THIS PLAN ACCURATE FOR ELECTRICAL WORK ONLY

E-4

DIST	COUNTY	ROUTE	KILOMETER POST TOTAL PROJECT	SHEET No	TOTAL SHEETS
04	SF	80	12.6/13.2	10	11

Carol Light — REGISTERED ELECTRICAL ENGINEER — 5/18/07 DATE

PLANS APPROVAL DATE

REGISTERED PROFESSIONAL ENGINEER — CAROL LIGHT — No. 10145 — Exp. 09/30/07 ELECTRICAL — STATE OF CALIFORNIA

PARSONS BRINCKERHOFF QUADE & DOUGLAS, INC.
303 Second St., Suite 700N
San Francisco, CA 94107-1317

SILVERMAN & LIGHT
1201 PARK AVENUE - SUITE 100
EMERYVILLE, CA 94608-3632

The State of California or its officers or agents shall not be responsible for the accuracy or completeness of electronic copies of this plan sheet.

Caltrans now has a web site! To get to the web site, go to http://www.dot.ca.gov

Caltrans Metric

DESIGN OVERSIGHT — Hong Wong

CALCULATED/ DESIGNED BY — BJ

CHECKED BY — CL

DATE	REVISED BY	DATE REVISED

STATE OF CALIFORNIA - DEPARTMENT OF TRANSPORTATION — Caltrans

LAST REVISION	DATE PLOTTED => 5/18/2007
00-00-00	TIME PLOTTED => $TIME

FOR REDUCED PLANS ORIGINAL 0 20 40 60 80 — DGN FILE => T:\13103\WS\SS_detour\Sewer lift Station\sheet files\ua04.dgn

DEPARTMENT OF TRANSPORTATION - District 4 Toll Bridge Program
333 Burma Rd.
Oakland, CA 94607
(510) 622-5660, (510) 286-0550 fax

CC MYERS INC
3286 FITZGERALD ROAD
RANCHO CORDOVA, CA 95741

Attn: Mr. Bob Coupe

Ref: 215-STL.00298

June 28, 2007

Contract No. 04-0120R4
04-SF-80-12.6, 13.2
South – South Detour

Letter No. 05.03.01-001021

Subject: Sanitary Sewer Lift Station - CCO No. 69

Dear Mr. Coupe,

Per the June 13, 2007 Sanitary Sewer Lift Station meeting with C. C. Myers Inc., San Francisco Public Utilities Commission, Stoloski & Gonzalez Inc. (S&G), S&G's subcontractors, and the Department, enclosed are updated plan sheets and final Special Provisions for Contract Change Order No. 69. The Contract Change Order transmitted via Transmittal No. 05.03.02-000611, dated May 29, 2007, should read, "Page 1 of 113".

Please use these revised plan sheets and Special Provisions to submit a detailed cost breakdown per Letter No. 05.03.01-000977, dated May 28, 2007.

Please note that the procurement lump sum of $110,000.00 for CCO No. 69 should not affect these changes.

Please contact Mahantesh Anigol if you have questions at (510) 622-5183.

Sincerely,

Carla Moreno
Assistant Resident Engineer
For
Mahantesh Anigol
Resident Engineer

Encl: Contract Change Order No. 69 Special Provisions
Contract Change Order No. 69 Plan Sheets

cc: S. Hulsebus
A. Yan
T. Refaat
P. Jefferson

file: 05.03.01, 49.69.02

Contract No. 04-0120R4

04-SF-80 (KP 12.6/13.2)

SPECIAL PROVISIONS
For
CONTRACT CHANGE ORDER No. 69

CONTRACT NO. 04-0120R4

CONTRACT CHANGE ORDER NO 69

SHEET 2 OF 113

Date May 18, 2007

CONTRACT NO. 04-0120R4
(Contract Change Order No. 69)

The special provisions contained herein have been prepared by or under the direction of the following Registered Persons.

CIVIL/ROADWAY

05/18/07

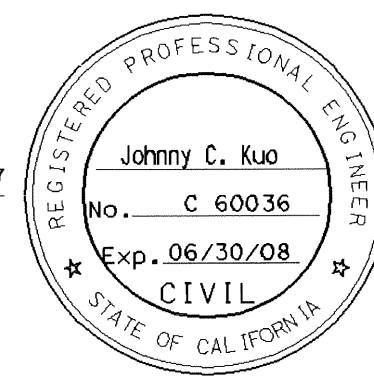

CONTRACT NO. 04-0120R4

CONTRACT CHANGE ORDER NO 69

SHEET 3 OF 113

CONTRACT NO. 04-0120R4
(Contract Change Order No. 69)

The special provisions contained herein have been prepared by or under the direction of the following Registered Persons.

MECHANICAL

Kenneth J Harris 05/18/07
REGISTERED MECHANICAL ENGINEER

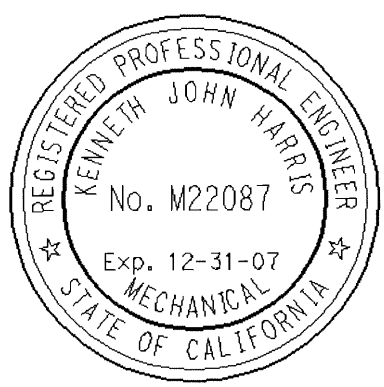

CONTRACT NO. 04-0120R4

CONTRACT CHANGE ORDER NO 69

SHEET 4 OF 113

CONTRACT NO. 04-0120R4
(Contract Change Order No. 69)

The special provisions contained herein have been prepared by or under the direction of the following Registered Persons.

STRUCTURES

REGISTERED CIVIL ENGINEER 05/18/07

REGISTERED PROFESSIONAL ENGINEER
Mee Shing Owyang
No. 24960
Exp. 12/31/07
CIVIL
STATE OF CALIFORNIA

CONTRACT NO. 04-0120R4

CONTRACT CHANGE ORDER NO 69

SHEET 5 OF 113

CONTRACT NO. 04-012084

CONTRACT CHANGE ORDER NO 69

SHEET 6 OF 113

SCOPE OF WORK (CCO No. 69) 6
SECTION 5. GENERAL 7
SECTION 5-1. MISCELLANEOUS 7
5-1.01 WORKING DRAWINGS 7
5-1.013 LINES AND GRADES 9
5-1.015 LABORATORY 10
5-1.019 COST REDUCTION INCENTIVE 11
5-1.02 LABOR NONDISCRIMINATION 12
5-1.03 PUBLIC SAFETY 13
5-1.04 TESTING 15
5-1.05 REMOVAL OF ASBESTOS AND HAZARDOUS SUBSTANCES 16
5-1.06 PAYMENTS 17
5-1.07 PROJECT INFORMATION 18
5-1.08 AREAS FOR CONTRACTOR'S USE 18
5-1.09 UTILITIES 19
5-1.10 SANITARY PROVISIONS 19
5-1.11 BRIDGE TOLLS 19
5-1.12 PERMITS AND LICENSES 19
5-1.13 SOUND CONTROL REQUIREMENTS 21
SECTION 6. (BLANK) 22
SECTION 7. (BLANK) 22
SECTION 8. MATERIALS 22
SECTION 8-1. MISCELLANEOUS 22
8-1.01 SUBSTITUTION OF NON-METRIC MATERIALS AND PRODUCTS 23
SECTION 8-2. CONCRETE 31
8-2.01 PORTLAND CEMENT CONCRETE 31
8-2.02 CORROSION CONTROL FOR PORTLAND CEMENT CONCRETE 32
SECTION 8-3. WELDING 34
8-3.01 WELDING 34
SECTION 9. (BLANK) 42
SECTION 10. CONSTRUCTION DETAILS 42
SECTION 10-1. GENERAL 42
10-1.01 ORDER OF WORK 43
10-1.09 TEMPORARY RAILING 44
10-1.10 EXISTING HIGHWAY FACILITIES 45
10-1.11 CLEARING AND GRUBBING 49
10-1.12 EARTHWORK 49
10-1.13 HEALTH AND SAFETY PLAN 51
10-1.14 AGGREGATE SUBBASE 51
10-1.15 AGGREGATE BASE 52
10-1.16 ASPHALT CONCRETE 53
10-1.17 REINFORCEMENT 55
10-1.18 SANITARY SEWER LIFT STATION 55
10-1.19 SEWER PIPE 62
10-1.20 SEWER MANHOLE 78
10-1.21 SLOPE PROTECTION 86
10-1.22 MISCELLANEOUS IRON AND STEEL 87
10-1.23 CHAIN LINK FENCE 88

10-1.24 METAL BEAM GUARD RAILING 89
SECTION 10-2. (BLANK) 92
SECTION 10-3. SIGNALS, LIGHTING AND ELECTRICAL SYSTEMS 92
10-3.01 DESCRIPTION 92
10-3.02 STANDARDS, STEEL PEDESTALS, AND POSTS 93
10-3.03 CONDUIT 94
10-3.04 CONDUCTORS AND WIRING 95
10-3.05 BONDING AND GROUNDING 96
10-3.06 SERVICE 97
10-3.07 PAYMENT 98
SECTION 11. (BLANK) 99

SCOPE OF WORK (CCO No. 69)

Scope of the work for Contract Change Order No. 69 for construction consists of the following facilities:

1. Sanitary sewer lift station as shown on the plans.
2. Demolish existing sewer pump station as shown on the plans.
3. Construct Pump station access road as shown on the plans.
4. Site grading as shown on the plans.
5. Chain link fence and gates as shown on the plans.
6. Relocate sanitary sewer lines as shown on the plans.
7. Remove sanitary sewer manhole as shown on the plans.
8. Relocate water line as shown on the plans.
9. Construct AC Dike and MBGR as shown on the plans.

CONTRACT NO. 04-0120R4

CONTRACT CHANGE ORDER NO 69

SHEET 7 OF 113

SECTION 5. GENERAL

SECTION 5-1. MISCELLANEOUS

5-1.01 WORKING DRAWINGS

Working drawings shall conform to the requirements in Section 5-1.02, "Plans and Working Drawings," of the Standard Specifications and these special provisions. Working drawings shall include supplements and calculations that are in addition to drawings.

Working drawings shall be submitted to the following location:

California Department of Transportation
Office of the Resident Engineer, Contract 04-0120R4
280 Beale Street
San Francisco, CA 94105

Working drawings shall conform to the following:

A. For initial review, 6 sets of the working drawings shall be submitted. After the Engineer has determined that a submittal is complete, 12 additional sets shall be submitted.

B. Drawings shall be 559 mm x 864 mm or 279 mm x 432 mm in size. Supplements and calculations shall be 216 mm x 280 mm in size.

C. For drawings, text size shall be nominally 2.8 mm high minimum. For supplement and calculations, font size shall be 12 minimum.

D. Text and details shall be legible and suitable for photocopying and reduction.

E. In addition to the paper copies of the working drawings, electronic files shall be submitted. Electronic files shall be portable document format (PDF) and shall be submitted on compact disk (CD) media. Each plan shall be a separate PDF file on the CD. The CD shall contain an index consisting of the file names and a description of the corresponding file contents. The files shall be listed in the sequence of : 1) index, 2) drawings, 3) supplement, and 4) calculations.

F. Microfilms are required for approved shop drawings and shall be only a 24x reduction. The edge of the corrected original tracing image shall be clearly visible and visually parallel with the edges of the page. A clear, legible symbol shall be provided on the upper left side of each page to show the amount of reduction, and a horizontal and vertical scale shall be provided on each reduced print to facilitate enlargement to original scale.

G. At the completion of the contract, one compiled set of all approved working drawings (in electronic form and including all corrections and revisions) shall be furnished to the Engineer. The index shall be the first file on the CD.

Working drawings shall be stamped and signed by an engineer who is registered as a Civil Engineer in the State of California. When independently checked calculations are required, these calculations shall be stamped and signed by another engineer who is registered as a Civil Engineer in the State of California.

Working drawings shall be submitted sufficiently in advance of the start of the affected work to allow time for review by the Engineer and correction by the Contractor of the drawings

without delaying the work. The time shall be proportional to the complexity of the work, but in no case shall the time be less than the review time as specified for the type of working drawings as required elsewhere in these special provisions.

The Engineer will review a working drawing submittal for completeness. Within ten working days of the receipt of the submittal by the Engineer, the Engineer will notify the Contractor in writing if the submittal is determined to be incomplete. If the submittal is determined to be incomplete, ten working days from the day of receipt shall be allowed for approval and return for correction of each submittal or resubmittal, unless otherwise specified in these special provisions.

Should the Engineer fail to review the complete working drawing submittal within the time specified, and the Contractor's controlling operation on the critical path is delayed (as determined by the Engineer) by the Engineer's failure to review within the time specified, an extension of time will be granted in conformance with the provisions in Section 8-1.07, "Liquidated Damages," of the Standard Specifications and in "Progress Schedule (Critical Path Method)," of these special provisions. Should the Engineer fail to review the complete working drawing submittal within the time specified, compensation, if any, will be made in accordance with Section 8-1.09, "Right of Way Delays," of the Standard Specifications, and "Time Related Overhead," of these special provisions.

CONTRACT NO. 04-012084

CONTRACT CHANGE ORDER NO 69

SHEET 9 OF 113

5-1.013 LINES AND GRADES

Attention is directed to Section 5-1.07, "Lines and Grades," of the Standard Specifications.

Stakes or marks will be set by the Engineer in conformance with the requirements in Chapter 12, "Construction Surveys," of the Department's Surveys Manual.

CONTRACT NO. 04-012084

CONTRACT CHANGE ORDER NO 69

SHEET 10 OF 113

5-1.015 LABORATORY

When a reference is made in the specifications to the "Laboratory," the reference shall mean Division of Engineering Services - Materials Engineering and Testing Services and Division of Engineering Services - Geotechnical Services of the Department of Transportation, or established laboratories of the various Districts of the Department, or other laboratories authorized by the Department to test materials and work involved in the contract. When a reference is made in the specifications to the "Transportation Laboratory," the reference shall mean Division of Engineering Services - Materials Engineering and Testing Services and Division of Engineering Services - Geotechnical Services, located at 5900 Folsom Boulevard, Sacramento, CA 95819, Telephone (916) 227-7000.

CONTRACT NO. 04-012QR4

CONTRACT CHANGE ORDER NO 69

SHEET 11 OF 113

5-1.019 COST REDUCTION INCENTIVE

Attention is directed to Section 5-1.14, "Cost Reduction Incentive," of the Standard Specifications.

Prior to preparing a written cost reduction proposal, the Contractor shall request a meeting with the Engineer to discuss the proposal in concept. Items of discussion will also include permit issues, impact on other projects, impact on the project schedule, peer reviews, overall merit of the proposal, and review times required by the Department and other agencies.

If a cost reduction proposal submitted by the Contractor, and subsequently approved by the Engineer, provides for a reduction in contract time, 50 percent of that contract time reduction shall be credited to the State by reducing the contract working days, not including plant establishment. Attention is directed to "Beginning of Work, Time of Completion and Liquidated Damages" of these special provisions regarding the working days.

If a cost reduction proposal submitted by the Contractor, and subsequently approved by the Engineer, provides for a reduction in traffic congestion or avoids traffic congestion during construction, 60 percent of the estimated net savings in construction costs attributable to the cost reduction proposal will be paid to the Contractor. In addition to the requirements in Section 5-1.14, "Cost Reduction Incentive," of the Standard Specifications, the Contractor shall provide detailed comparisons of the traffic handling between the existing contract and the proposed change, and estimates of the traffic volumes and congestion.

CONTRACT NO. 04-0120R4

CONTRACT CHANGE ORDER NO 69

SHEET 12 OF 113

5-1.02 LABOR NONDISCRIMINATION

Attention is directed to the following Notice that is required by Chapter 5 of Division 4 of Title 2, California Code of Regulations.

NOTICE OF REQUIREMENT FOR NONDISCRIMINATION PROGRAM

(GOV. CODE, SECTION 12990)

Your attention is called to the "Nondiscrimination Clause", set forth in Section 7-1.01A(4), "Labor Nondiscrimination," of the Standard Specifications, which is applicable to all nonexempt State contracts and subcontracts, and to the "Standard California Nondiscrimination Construction Contract Specifications" set forth therein. The specifications are applicable to all nonexempt State construction contracts and subcontracts of $5000 or more.

CONTRACT NO. 04-0120R4

CONTRACT CHANGE ORDER NO 69

SHEET 13 OF 113

5-1.03 PUBLIC SAFETY

The Contractor shall provide for the safety of traffic and the public in conformance with the provisions in Section 7-1.09, "Public Safety," of the Standard Specifications and these special provisions.

The Contractor shall install temporary railing (Type K) between a lane open to public traffic and an excavation, obstacle or storage area when the following conditions exist:

A. Excavations—The near edge of the excavation is 3.6 m or less from the edge of the lane, except:

   1. Excavations covered with sheet steel or concrete covers of adequate thickness to prevent accidental entry by traffic or the public.
   2. Excavations less than 0.3-m deep.
   3. Trenches less than 0.3-m wide for irrigation pipe or electrical conduit, or excavations less than 0.3-m in diameter.
   4. Excavations parallel to the lane for the purpose of pavement widening or reconstruction.
   5. Excavations in side slopes, where the slope is steeper than 1:4 (vertical:horizontal).
   6. Excavations protected by existing barrier or railing.

B. Temporarily Unprotected Permanent Obstacles—The work includes the installation of a fixed obstacle together with a protective system, such as a sign structure together with protective railing, and the Contractor elects to install the obstacle prior to installing the protective system; or the Contractor, for the Contractor's convenience and with permission of the Engineer, removes a portion of an existing protective railing at an obstacle and does not replace such railing complete in place during the same day.

C. Storage Areas—Material or equipment is stored within 3.6 m of the lane and the storage is not otherwise prohibited by the provisions of the Standard Specifications and these special provisions.

The approach end of temporary railing (Type K), installed in conformance with the provisions in this section "Public Safety" and in Section 7-1.09, "Public Safety," of the Standard Specifications, shall be offset a minimum of 4.6 m from the edge of the traffic lane open to public traffic. The temporary railing shall be installed on a skew toward the edge of the traffic lane of not more than 0.3-m transversely to 3 m longitudinally with respect to the edge of the traffic lane. If the 4.6-m minimum offset cannot be achieved, the temporary railing shall be installed on the 10 to 1 skew to obtain the maximum available offset between the approach end of the railing and the edge of the traffic lane, and an array of temporary crash cushion modules shall be installed at the approach end of the temporary railing.

Except for installing, maintaining and removing traffic control devices, whenever work is performed or equipment is operated in the following work areas, the Contractor shall close the adjacent traffic lane unless otherwise provided in the Standard Specifications and these special provisions:

Approach Speed of Public Traffic (Posted Limit) (Kilometers Per Hour)	Work Areas
Over 72 (45 Miles Per Hour)	Within 1.8 m of a traffic lane but not on a traffic lane
56 to 72 (35 to 45 Miles Per Hour)	Within 0.9-m of a traffic lane but not on a traffic lane

The lane closure provisions of this section shall not apply if the work area is protected by permanent or temporary railing or barrier.

When traffic cones or delineators are used to delineate a temporary edge of a traffic lane, the line of cones or delineators shall be considered to be the edge of the traffic lane, however, the Contractor shall not reduce the width of an existing lane to less than 3 m without written approval from the Engineer.

When work is not in progress on a trench or other excavation that required closure of an adjacent lane, the traffic cones or portable delineators used for the lane closure shall be placed off of and adjacent to the edge of the traveled way. The spacing of the cones or delineators shall be not more than the spacing used for the lane closure.

Suspended loads or equipment shall not be moved nor positioned over public traffic or pedestrians.

Full compensation for conforming to the provisions in this section "Public Safety," including furnishing and installing temporary railing (Type K) and temporary crash cushion modules, shall be considered as included in the contract prices paid for the various items of work involved and no additional compensation will be allowed therefor.

CONTRACT NO. 04-012024

CONTRACT CHANGE ORDER NO 69

SHEET 15 OF 113

5-1.04 TESTING

Testing of materials and work shall conform to the provisions in Section 6-3, "Testing," of the Standard Specifications and these special provisions.

Whenever the provisions of Section 6-3.01, "General," of the Standard Specifications refer to tests or testing, it shall mean tests to assure the quality and to determine the acceptability of the materials and work.

The Engineer will deduct the costs for testing of materials and work found to be unacceptable, as determined by the tests performed by the Department, and the costs for testing of material sources identified by the Contractor which are not used for the work, from moneys due or to become due to the Contractor. The amount deducted will be determined by the Engineer.

CONTRACT NO. 04-012024

CONTRACT CHANGE ORDER NO 69

SHEET 16 OF 113

5-1.05 REMOVAL OF ASBESTOS AND HAZARDOUS SUBSTANCES

When the presence of asbestos or hazardous substances are not shown on the plans or indicated in the specifications and the Contractor encounters materials which the Contractor reasonably believes to be asbestos or a hazardous substance as defined in Section 25914.1 of the Health and Safety Code, and the asbestos or hazardous substance has not been rendered harmless, the Contractor may continue work in unaffected areas reasonably believed to be safe. The Contractor shall immediately cease work in the affected area and report the condition to the Engineer in writing.

In conformance with Section 25914.1 of the Health and Safety Code, removal of asbestos or hazardous substances including exploratory work to identify and determine the extent of the asbestos or hazardous substance will be performed by separate contract.

If delay of work in the area delays the current controlling operation, the delay will be considered a right of way delay and the Contractor will be compensated for the delay in conformance with the provisions in Section 8-1.09, "Right of Way Delays," of the Standard Specifications.

CONTRACT NO. 04-012QR4

CONTRACT CHANGE ORDER NO 69

SHEET 17 OF 113

5-1.06 PAYMENTS

Attention is directed to Sections 9-1.06, "Partial Payments," and 9-1.07, "Payment After Acceptance," of the Standard Specifications and these special provisions.

For the purpose of making partial payments pursuant to Section 9-1.06, "Partial Payments," of the Standard Specifications, the amount set forth for the contract items of work hereinafter listed shall be deemed to be the maximum value of the contract item of work which will be recognized for progress payment purposes:

A. Clearing and Grubbing $ 21,000

After acceptance of the contract pursuant to the provisions in Section 7-1.17, "Acceptance of Contract," of the Standard Specifications, the amount, if any, payable for a contract item of work in excess of the maximum value for progress payment purposes hereinabove listed for the item, will be included for payment in the first estimate made after acceptance of the contract.

No partial payment will be made for any materials on hand which are furnished but not incorporated in the work.

CONTRACT NO. 04-0120R4

CONTRACT CHANGE ORDER NO 69

SHEET 18 OF 113

5-1.07 PROJECT INFORMATION

The information in this section has been compiled specifically for this project and is made available for bidders and Contractors. Other information referenced in the Standard Specifications and these special provisions do not appear in this section. The information is subject to the conditions and limitations set forth in Section 2-1.03, "Examination of Plans, Specifications, Contract, and Site of Work," and Section 6-2, "Local Materials," of the Standard Specifications. Bidders and Contractors shall be responsible for knowing the procedures for obtaining information.

CONTRACT NO. 04-0120R4

CONTRACT CHANGE ORDER NO 69

SHEET 19 OF 113

Cross sections are not available for this project.

The District Office in which the work is situated is located at 111 Grand Ave, Oakland CA 94612.

Plans of the existing bridges may be requested by fax from the Office of Structure Maintenance and Investigations, 1801 30th Street, Sacramento, CA, Fax (916) 227-8357.

Plans of the existing bridges available to bidders and Contractors are reproductions of the original contract plans, with significant changes noted, and working drawings, and do not necessarily show normal construction tolerances and variances. Where dimensions of new construction required by this contract are dependent on the dimensions of the existing bridges, the Contractor shall verify the controlling field dimensions and shall be responsible for adjusting dimensions of the work to fit existing conditions.

5-1.08 AREAS FOR CONTRACTOR'S USE

Attention is directed to the requirements specified in Section 7-1.19, "Rights in Land and Improvements," of the Standard Specifications, plans and these special provisions.

The highway right of way shall be used for purposes that are necessary to perform the required work. The Contractor shall not occupy the right of way, or allow others to occupy the right of way, for purposes which are not necessary to perform the required work.

The Contractor's attention is directed to "Cooperation" of these special provisions, and the Contractor shall use only the designated areas for Contractor's use as specified in this section, as shown on the plans, and as follows:

1. **Area PR**: is available for the contractor's use for the entire contract period except limited by the areas as defined on the contract plans and these special provisions. The Contractor shall permit access by other contractors as directed by the Engineer.
2. **Area FPR**: is primarily available to Contract 04-0120R4 until May 1, 2007. After May 1, 2007, area FPR shall be considered a part of area FP.
3. **Area FP**: is available for use by the 04-0120R4 contract until November 30, 2007. The area FP shall then be made available to the contractor constructing the YBI transition structures under contract 04-0120S4 until May 1, 2009.
4. **Area EF**: is primarily available to Contract 04-0120E4 until March 31, 2008, and then to this contract after that date. Prior to March 31, 2008, the Contractor shall coordinated any planned work in area EF with the Engineer and Contract 04-0120E4 contractor.
5. **AREA CE**: is designated for use by Contract 04-0120E4 until March 31, 2008. The Contractor shall have access through area CE to the work area at Pier W2. After

CONTRACT NO. 04-0120S4
CONTRACT CHANGE ORDER NO 69
SHEET 20 OF 113

March 31, 2008, the area CE becomes a part of the area provided to the yerba Buena Island Structures contractor on Contract 04-0120S4.

The Contractor shall maintain access to the Torpedo Factory area at the east end of Yerba Buena Island at all times during the contract. Access may be via the existing Torpedo Factory Road or other routing as approved by the Engineer.

No area is available within the contract limits for the exclusive use of the Contractor. However, temporary storage of equipment and materials on State property may be arranged with the Engineer, subject to the prior demands of State maintenance forces and to other contract requirements. Use of the Contractor's work areas and other State-owned property shall be at the Contractor's own risk. The State shall not be held liable for damage to or loss of materials or equipment located within these areas.

Toll plaza parking lots shall not be used for the Contractor's employees private vehicles and the Contractor's equipment and vehicles.

The Contractor shall remove the equipment, materials, and rubbish from the work areas and other State-owned property which the Contractor occupies and shall leave the areas in presentable condition, in conformance with the provisions in Section 4-1.02, "Final Clean Up," of the Standard Specifications.

The Contractor shall secure, at the Contractor's own expense, areas required for storage of plans, equipment, and materials, or for other purposes if sufficient area is not available to the Contractor within the contract limits.

5-1.09 UTILITIES

The Contractor shall make arrangements to obtain electrical power, water or compressed air or other utilities required for the Contractor's operations and shall make and maintain the necessary service connections at the Contractor's own expense.

5-1.10 SANITARY PROVISIONS

State sanitary facilities will not be available for use by the Contractor's employees.

5-1.11 BRIDGE TOLLS

Toll-free passage on the San Francisco-Oakland Bay Bridge will be granted only for cars, trucks and special construction equipment which are clearly marked on the exterior with the Contractor's identification and which are being operated by the Contractor exclusively for the project, and which are used for the purpose of transporting materials and workers directly to and from the project site.

5-1.12 PERMITS AND LICENSES

Attention is directed to Section 7-1.04, "Permits and Licenses," of the Standard Specifications and these special provisions.

The Department has obtained the permits and licenses from the following agencies for this project:

A. California Regional Water Quality Control Board (RWQCB)

B. U.S. Army Corps of Engineers (ACOE)
C. San Francisco Bay Conservation Development Commission (BCDC)
D. United States Coast Guard (USCG)
E. California Department of Fish and Game (CDFG)

These permits have been made available to the Contractor as part of the information handout for the 04-0120R4 Contract.

For updated versions of environmental permits, the Contractor shall visit the website:

www.biomitigation.org

Full compensation for conforming to the requirements in these permits and licenses shall be considered as included in the prices paid for the various contract items of work and no additional compensation will be allowed therefor.

CONTRACT NO. 04-0120R4

CONTRACT CHANGE ORDER NO 69

SHEET 21 OF 113

5-1.13 SOUND CONTROL REQUIREMENTS

Sound control shall conform to the provisions in Section 7-1.01I, "Sound Control Requirements," of the Standard Specifications and these special provisions.

The noise level from the Contractor's operations, between the hours of 7:00 p.m. and 7:00 a.m., shall not exceed 78 dBa at a distance of 15 m from the source. Impact type mechanical operations, such as pile-driving and jack-hammering, shall not be conducted between the hours of 7:00 pm to 7:00 am. This requirement shall not relieve the Contractor from responsibility for complying with local ordinances regulating noise level at all times.

The noise level requirement shall apply to the equipment on the job or related to the job, including but not limited to trucks, transit mixers or transient equipment that may or may not be owned by the Contractor. The use of loud sound signals shall be avoided in favor of light warnings except those required by safety laws for the protection of personnel.

Full compensation for conforming to the requirements of this section shall be considered as included in the prices paid for the various contract items of work involved and no additional compensation will be allowed therefor.

Noise monitoring activities will be conducted by the Department of Transportation. The Contractor shall coordinate with the Department of Transportation monitors and allow them access to noise monitoring locations.

CONTRACT NO. 04-0120R4

CONTRACT CHANGE ORDER NO 69

SHEET 22 OF 113

SECTION 6. (BLANK)

SECTION 7. (BLANK)

SECTION 8. MATERIALS

SECTION 8-1. MISCELLANEOUS

CONTRACT NO. 04-0120R4

CONTRACT CHANGE ORDER NO 69

SHEET 23 OF 113

8-1.01 SUBSTITUTION OF NON-METRIC MATERIALS AND PRODUCTS

Only materials and products conforming to the requirements of the specifications shall be incorporated in the work. When metric materials and products are not available, and when approved by the Engineer, and at no cost to the State, materials and products in the United States Standard Measures which are of equal quality and of the required properties and characteristics for the purpose intended, may be substituted for the equivalent metric materials and products, subject to the following provisions:

A. Materials and products shown on the plans or in the special provisions as being equivalent may be substituted for the metric materials and products specified or detailed on the plans.
B. Before other non-metric materials and products will be considered for use, the Contractor shall furnish, at the Contractor's expense, evidence satisfactory to the Engineer that the materials and products proposed for use are equal to or better than the materials and products specified or detailed on the plans. The burden of proof as to the quality and suitability of substitutions shall be upon the Contractor and the Contractor shall furnish necessary information as required by the Engineer. The Engineer will be the sole judge as to the quality and suitability of the substituted materials and products and the Engineer's decision will be final.
C. When the Contractor elects to substitute non-metric materials and products, including materials and products shown on the plans or in the special provisions as being equivalent, the list of sources of material specified in Section 6-1.01, "Source of Supply and Quality of Materials," of the Standard Specification shall include a list of substitutions to be made and contract items involved. In addition, for a change in design or details, the Contractor shall submit plans and working drawings in conformance with the provisions in Section 5-1.02, "Plans and Working Drawings," of the Standard Specifications. The plans and working drawings shall be submitted at least 7 days before the Contractor intends to begin the work involved.

Unless otherwise specified, the following substitutions of materials and products will be allowed:

CONTRACT NO. 04-0120R4

CONTRACT CHANGE ORDER NO 69

SHEET 24 OF 113

SUBSTITUTION TABLE FOR PLAIN WIRE REINFORCEMENT
ASTM Designation: A 82

METRIC SIZE SHOWN ON THE PLANS mm^2	SIZE TO BE SUBSTITUTED $inch^2 \times 100$
MW9	W1.4
MW10	W1.6
MW13	W2.0
MW15	W2.3
MW19	W2.9
MW20	W3.1
MW22	W3.5
MW25	W3.9, except W3.5 in piles only
MW26	W4.0
MW30	W4.7
MW32	W5.0
MW35	W5.4
MW40	W6.2
MW45	W6.5
MW50	W7.8
MW55	W8.5, except W8.0 in piles only
MW60	W9.3
MW70	W10.9, except W11.0 in piles only
MW80	W12.4
MW90	W14.0
MW100	W15.5

SUBSTITUTION TABLE FOR BAR REINFORCEMENT

METRIC BAR DESIGNATION NUMBER[1] SHOWN ON THE PLANS	BAR DESIGNATION NUMBER[2] TO BE SUBSTITUTED
10	3
13	4
16	5
19	6
22	7
25	8
29	9
32	10
36	11
43	14
57	18

[1]Bar designation numbers approximate the number of millimeters of the nominal diameter of the bars.

[2]Bar numbers are based on the number of eighths of an inch included in the nominal diameter of the bars.

No adjustment will be required in spacing or total number of reinforcing bars due to a difference in minimum yield strength between metric and non-metric bars.

CONTRACT NO. 04-012Q4

CONTRACT CHANGE ORDER NO 69

SHEET 25 OF 113

SUBSTITUTION TABLE FOR SIZES OF:

(1) STEEL FASTENERS FOR GENERAL APPLICATIONS (ASTM Designation: A 307 or AASHTO Designation: M 314, Grade 36 or 55), and

(2) HIGH STRENGTH STEEL FASTENERS (ASTM Designation: A 325 or A 449)

METRIC SIZE SHOWN ON THE PLANS mm	SIZE TO BE SUBSTITUTED inch
6 or 6.35	1/4
8 or 7.94	5/16
10 or 9.52	3/8
11 or 11.11	7/16
13, 12.70, or M12	1/2
14 or 14.29	9/16
16, 15.88, or M16	5/8
19, 19.05, or M20	3/4
22, 22.22, or M22	7/8
24, 25, 25.40, or M24	1
29, 28.58, or M27	1-1/8
32, 31.75, or M30	1-1/4
35 or 34.93	1-3/8
38, 38.10, or M36	1-1/2
44 or 44.45	1-3/4
51 or 50.80	2
57 or 57.15	2-1/4
64 or 63.50	2-1/2
70 or 69.85	2-3/4
76 or 76.20	3
83 or 82.55	3-1/4
89 or 88.90	3-1/2
95 or 95.25	3-3/4
102 or 101.60	4

CONTRACT NO. 04-012024

CONTRACT CHANGE ORDER NO 69

SHEET 26 OF 113

SUBSTITUTION TABLE FOR NOMINAL THICKNESS OF SHEET METAL

UNCOATED HOT AND COLD ROLLED SHEETS		HOT-DIPPED ZINC COATED SHEETS (GALVANIZED)	
METRIC THICKNESS SHOWN ON THE PLANS mm	GAGE TO BE SUBSTITUTED inch	METRIC THICKNESS SHOWN ON THE PLANS mm	GAGE TO BE SUBSTITUTED inch
7.94	0.3125	4.270	0.1681
6.07	0.2391	3.891	0.1532
5.69	0.2242	3.510	0.1382
5.31	0.2092	3.132	0.1233
4.94	0.1943	2.753	0.1084
4.55	0.1793	2.372	0.0934
4.18	0.1644	1.994	0.0785
3.80	0.1495	1.803	0.0710
3.42	0.1345	1.613	0.0635
3.04	0.1196	1.461	0.0575
2.66	0.1046	1.311	0.0516
2.28	0.0897	1.158	0.0456
1.90	0.0747	1.006 or 1.016	0.0396
1.71	0.0673	0.930	0.0366
1.52	0.0598	0.853	0.0336
1.37	0.0538	0.777	0.0306
1.21	0.0478	0.701	0.0276
1.06	0.0418	0.627	0.0247
0.91	0.0359	0.551	0.0217
0.84	0.0329	0.513	0.0202
0.76	0.0299	0.475	0.0187
0.68	0.0269	--------	--------
0.61	0.0239	--------	--------
0.53	0.0209	--------	--------
0.45	0.0179	--------	--------
0.42	0.0164	--------	--------
0.38	0.0149	--------	--------

CONTRACT NO. 04-0120R4

CONTRACT CHANGE ORDER NO 69

SHEET 27 OF 113

SUBSTITUTION TABLE FOR WIRE

METRIC THICKNESS SHOWN ON THE PLANS mm	WIRE THICKNESS TO BE SUBSTITUTED inch	GAGE NO.
6.20	0.244	3
5.72	0.225	4
5.26	0.207	5
4.88	0.192	6
4.50	0.177	7
4.11	0.162	8
3.76	0.148	9
3.43	0.135	10
3.05	0.120	11
2.69	0.106	12
2.34	0.092	13
2.03	0.080	14
1.83	0.072	15
1.57	0.062	16
1.37	0.054	17
1.22	0.048	18
1.04	0.041	19
0.89	0.035	20

SUBSTITUTION TABLE FOR PIPE PILES

METRIC SIZE SHOWN ON THE PLANS mm x mm	SIZE TO BE SUBSTITUTED inch x inch
PP 360 x 4.55	NPS 14 x 0.179
PP 360 x 6.35	NPS 14 x 0.250
PP 360 x 9.53	NPS 14 x 0.375
PP 360 x 11.12	NPS 14 x 0.438
PP 406 x 12.70	NPS 16 x 0.500
PP 460 x T	NPS 18 x T"
PP 508 x T	NPS 20 x T"
PP 559 x T	NPS 22 x T"
PP 610 x T	NPS 24 x T"
PP 660 x T	NPS 26 x T"
PP 711 x T	NPS 28 x T"
PP 762 x T	NPS 30 x T"
PP 813 x T	NPS 32 x T"
PP 864 x T	NPS 34 x T"
PP 914 x T	NPS 36 x T"
PP 965 x T	NPS 38 x T"
PP 1016 x T	NPS 40 x T"
PP 1067 x T	NPS 42 x T"
PP 1118 x T	NPS 44 x T"
PP 1219 x T	NPS 48 x T"
PP 1524 x T	NPS 60 x T"

The thickness in millimeters (T) represents an exact conversion of the thickness in inches (T").

CONTRACT NO. 04-012024

CONTRACT CHANGE ORDER NO 69

SUBSTITUTION TABLE FOR CIDH CONCRETE PILING

METRIC SIZE SHOWN ON THE PLANS	ACTUAL AUGER SIZE TO BE SUBSTITUTED inches
350 mm	14
400 mm	16
450 mm	18
600 mm	24
750 mm	30
900 mm	36
1.0 m	42
1.2 m	48
1.5 m	60
1.8 m	72
2.1 m	84
2.4 m	96
2.7 m	108
3.0 m	120
3.3 m	132
3.6 m	144
4.0 m	156

SUBSTITUTION TABLE FOR STRUCTURAL TIMBER AND LUMBER

METRIC MINIMUM DRESSED DRY, SHOWN ON THE PLANS mm x mm	METRIC MINIMUM DRESSED GREEN, SHOWN ON THE PLANS mm x mm	NOMINAL SIZE TO BE SUBSTITUTED inch x inch
19x89	20x90	1x4
38x89	40x90	2x4
64x89	65x90	3x4
89x89	90x90	4x4
140x140	143x143	6x6
140x184	143x190	6x8
184x184	190x190	8x8
235x235	241x241	10x10
286x286	292x292	12x12

CONTRACT NO. 04-0120R4

CONTRACT CHANGE ORDER NO 69

SHEET 29 OF 113

SUBSTITUTION TABLE FOR NAILS AND SPIKES

METRIC COMMON NAIL, SHOWN ON THE PLANS Length, mm Diameter, mm	METRIC BOX NAIL, SHOWN ON THE PLANS Length, mm Diameter, mm	METRIC SPIKE, SHOWN ON THE PLANS Length, mm Diameter, mm	SIZE TO BE SUBSTITUTED Penny-weight
50.80 2.87	50.80 2.51	———	6d
63.50 3.33	63.50 2.87	———	8d
76.20 3.76	76.20 3.25	76.20 4.88	10d
82.55 3.76	82.55 3.25	82.55 4.88	12d
88.90 4.11	88.90 3.43	88.90 5.26	16d
101.60 4.88	101.60 3.76	101.60 5.72	20d
114.30 5.26	114.30 3.76	114.30 6.20	30d
127.00 5.72	127.00 4.11	127.00 6.68	40d
———	———	139.70 7.19	50d
———	———	152.40 7.19	60d

CONTRACT NO. 04-0120R4

CONTRACT CHANGE ORDER NO 69

SHEET 30 OF 113

SUBSTITUTION TABLE FOR IRRIGATION COMPONENTS

METRIC WATER METERS, TRUCK LOADING STANDPIPES, VALVES, BACKFLOW PREVENTERS, FLOW SENSORS, WYE STRAINERS, FILTER ASSEMBLY UNITS, PIPE SUPPLY LINES, AND PIPE IRRIGATION SUPPLY LINES SHOWN ON THE PLANS DIAMETER NOMINAL (DN) mm	NOMINAL SIZE TO BE SUBSTITUTED inch
15	1/2
20	3/4
25	1
32	1-1/4
40	1-1/2
50	2
65	2-1/2
75	3
100	4
150	6
200	8
250	10
300	12
350	14
400	16

Unless otherwise specified, substitutions of United States Standard Measures standard structural shapes corresponding to the metric designations shown on the plans and in conformance with the requirements in ASTM Designation: A 6/A 6M, Annex 2, will be allowed.

CONTRACT NO. 04-012024

CONTRACT CHANGE ORDER NO 69

SHEET 31 OF 113

SECTION 8-2. CONCRETE

8-2.01 PORTLAND CEMENT CONCRETE

Portland cement concrete shall conform to the provisions in Section 90, "Portland Cement Concrete," of the Standard Specifications and these special provisions.

References to Section 90-2.01, "Portland Cement," of the Standard Specifications shall mean Section 90-2.01, "Cement," of the Standard Specifications.

Mineral admixture shall be combined with cement in conformance with the provisions in Section 90-4.08, "Required Use of Mineral Admixtures," of the Standard Specifications for the concrete materials specified in Section 56-2, "Roadside Signs," of the Standard Specifications.

The requirements of Section 90-4.08, "Required Use of Mineral Admixture," of the Standard Specifications shall not apply to Section 19-3.025C, "Soil Cement Bedding," of the Standard Specifications.

The Department maintains a list of sources of fine and coarse aggregate that have been approved for use with a reduced amount of mineral admixture in the total amount of cementitious material to be used. A source of aggregate will be considered for addition to the approved list if the producer of the aggregate submits to the Transportation Laboratory certified test results from a qualified testing laboratory that verify the aggregate complies with the requirements. Prior to starting the testing, the aggregate test shall be registered with the Department. A registration number can be obtained by calling (916) 227-7228. The registration number shall be used as the identification for the aggregate sample in correspondence with the Department. Upon request, a split of the tested sample shall be provided to the Department. Approval of aggregate will depend upon compliance with the specifications, based on the certified test results submitted, together with any replicate testing the Department may elect to perform. Approval will expire 3 years from the date the most recent registered and evaluated sample was collected from the aggregate source.

Qualified testing laboratories shall conform to the following requirements:

A. Laboratories performing ASTM Designation: C 1293 shall participate in the Cement and Concrete Reference Laboratory (CCRL) Concrete Proficiency Sample Program and shall have received a score of 3 or better on all tests of the previous 2 sets of concrete samples.
B. Laboratories performing ASTM Designation: C 1260 shall participate in the Cement and Concrete Reference Laboratory (CCRL) Pozzolan Proficiency Sample Program and shall have received a score of 3 or better on the shrinkage and soundness tests of the previous 2 sets of pozzolan samples.

Aggregates on the list shall conform to one of the following requirements:

A. When the aggregate is tested in conformance with the requirements in California Test 554 and ASTM Designation: C 1293, the average expansion at one year shall be less than or equal to 0.040 percent; or
B. When the aggregate is tested in conformance with the requirements in California Test 554 and ASTM Designation: C 1260, the average of the expansion at 16 days shall be less than or equal to 0.15 percent.

CONTRACT NO. 04-012024
CONTRACT CHANGE ORDER NO 69
SHEET 33 OF 113

The amounts of cement and mineral admixture used in cementitious material shall be sufficient to satisfy the minimum cementitious material content requirements specified in Section 90-1.01, "Description," or Section 90-4.05, "Optional Use of Chemical Admixtures," of the Standard Specifications and shall conform to the following:

A. The minimum amount of cement shall not be less than 75 percent by mass of the specified minimum cementitious material content.
B. The minimum amount of mineral admixture to be combined with cement shall be determined using one of the following criteria:

    1. When the calcium oxide content of a mineral admixture is equal to or less than 2 percent by mass, the amount of mineral admixture shall not be less than 15 percent by mass of the total amount of cementitious material to be used in the mix.
    2. When the calcium oxide content of a mineral admixture is greater than 2 percent by mass, and any of the aggregates used are not listed on the approved list as specified in these special provisions, then the amount of mineral admixture shall not be less than 25 percent by mass of the total amount of cementitious material to be used in the mix.
    3. When the calcium oxide content of a mineral admixture is greater than 2 percent by mass and the fine and coarse aggregates are listed on the approved list as specified in these special provisions, then the amount of mineral admixture shall not be less than 15 percent by mass of the total amount of cementitious material to be used in the mix.
    4. When a mineral admixture that conforms to the provisions for silica fume in Section 90-2.04, "Admixture Materials," of the Standard Specifications is used, the amount of mineral admixture shall not be less than 10 percent by mass of the total amount of cementitious material to be used in the mix.
    5. When a mineral admixture that conforms to the provisions for silica fume in Section 90-2.04, "Admixture Materials," of the Standard Specifications is used and the fine and coarse aggregates are listed on the approved list as specified in these special provisions, then the amount of mineral admixture shall not be less than 7 percent by mass of the total amount of cementitious material to be used in the mix.

C. The total amount of mineral admixture shall not exceed 35 percent by mass of the total amount of cementitious material to be used in the mix. Where Section 90-1.01, "Description," of the Standard Specifications specifies a maximum cementitious content in kilograms per cubic meter, the total mass of cement and mineral admixture per cubic meter shall not exceed the specified maximum cementitious material content.

The Contractor will be permitted to use Type II/Type V portland cement with appropriate corrosion protection for concrete used in the manufacture of precast concrete members.

8-2.02 CORROSION CONTROL FOR PORTLAND CEMENT CONCRETE

Permanent structures with Portland cement concrete in contact with soil or rock including that utilized for sewer manhole and foundations are considered to be in corrosive environment and shall conform to the provisions in Section 90, "Portland Cement Concrete," of the Standard Specifications and these special provisions.

Cementitious material to be used in Portland cement concrete shall conform to the provisions for cement and mineral admixtures in Section 90-2, "Materials," of the Standard Specifications, and shall be a combination of "Type II/Type V" Portland cement and mineral admixture.

Concrete in corrosive environment shall contain not less than 400 kg of cementitious material per cubic meter.

No reduction in the cementitious material content specified or ordered, in conformance with the provisions in Section 90-4.05, "Optional Use of Chemical Admixtures," of the Standard Specifications, will be allowed for concrete in a corrosive environment.

Unless otherwise specified, for concrete in a corrosive environment, the amount of cement shall be 75 percent by mass, and the amount of mineral admixture to be combined with cement shall be 25 percent by mass, of the total amount of cementitious material to be used in the concrete mix. The calcium oxide content of mineral admixtures shall not exceed 10 percent.

Mineral admixture for concrete in a corrosive environment shall conform to ASTM Designation: C618 Class F or N.

The amount of free water used in concrete in a corrosive environment shall not exceed 160 kg/m3, plus 40 kg for each 100 kg of cementitious material in excess of 400 kg/m3.

Full compensation for conforming to the above requirement shall be considered as included in the contract prices for the various items of work and no additional compensation will be allowed therefor.

CONTRACT NO. 04-0120R4

CONTRACT CHANGE ORDER NO 69

SHEET 34 OF 113

CONTRACT NO. 04-012024
CONTRACT CHANGE ORDER NO 69
SHEET 35 OF 113

SECTION 8-3. WELDING

8-3.01 WELDING

GENERAL

Flux core welding electrodes conforming to the requirements of AWS A5.20 E6XT-4 or E7XT-4 shall not be used to perform welding for this project.

Wherever reference is made to the following AWS welding codes in the Standard Specifications, on the plans, or in these special provisions, the year of adoption for these codes shall be as listed:

AWS Code	Year of Adoption
D1.1	2002
D1.4	1998
D1.5	2002
D1.6	1999

Requirements of the AWS welding codes shall apply unless specified otherwise in the Standard Specifications, on the plans, or in these special provisions. Wherever the abbreviation AWS is used, it shall be equivalent to the abbreviations ANSI/AWS or AASHTO/AWS.

Section 6.1.1.1 of AWS D1.5 is replaced with the following:

Quality Control (QC) shall be the responsibility of the Contractor. As a minimum, the Contractor shall perform inspection and testing of each weld joint prior to welding, during welding, and after welding as specified in this section and as necessary to ensure that materials and workmanship conform to the requirements of the contract documents.

Sections 6.1.3 through 6.1.4.3 of AWS D1.1, Section 7.1.2 of AWS D1.4, and Sections 6.1.1.2 through 6.1.3.3 of AWS D1.5 are replaced with the following:

The QC Inspector shall be the duly designated person who acts for and on behalf of the Contractor for inspection, testing, and quality related matters for all welding.

Quality Assurance (QA) is the prerogative of the Engineer. The QA Inspector is the duly designated person who acts for and on behalf of the Engineer.

The QC Inspector shall be responsible for quality control acceptance or rejection of materials and workmanship, and shall be currently certified as an AWS Certified Welding Inspector (CWI) in conformance with the requirements in AWS QC1, " Standard for AWS Certification of Welding Inspectors."

The QC Inspector may be assisted by an Assistant QC Inspector provided that this individual is currently certified as an AWS Certified Associate Welding Inspector (CAWI) in conformance with the requirements in AWS QC1, "Standard for AWS Certification of Welding Inspectors." The Assistant QC Inspector may perform inspection under the direct supervision of the QC Inspector provided the Assistant is always within visible and audible range of the QC Inspector. The QC Inspector shall be responsible for signing all reports and for determining if welded materials conform to workmanship and acceptance criteria. The ratio of QC Assistants to QC Inspectors shall not exceed 5 to 1.

When the term "Inspector" is used without further qualification, it shall refer to the QC Inspector.

CONTRACT NO. 04-012024 CONTRACT CHANGE ORDER NO 69
SHEET 36 OF 113

Section 6.14.6, "Personnel Qualification," of AWS D1.1, Section 7.8, "Personnel Qualification," of AWS D1.4, and Section 6.1.3.4, "Personnel Qualification," of AWS D1.5 are replaced with the following:

Personnel performing nondestructive testing (NDT) shall be qualified and certified in conformance with the requirements of the American Society for Nondestructive Testing (ASNT) Recommended Practice No. SNT-TC-1A and the Written Practice of the NDT firm. The Written Practice of the NDT firm shall meet or exceed the guidelines of the ASNT Recommended Practice No. SNT-TC-1A. Individuals who perform NDT, review the results, and prepare the written reports shall be either:

A. Certified NDT Level II technicians, or;
B. Level III technicians who hold a current ASNT Level III certificate in that discipline and are authorized and certified to perform the work of Level II technicians.

Section 6.5.4 of AWS D1.5 is replaced with the following:

The QC Inspector shall inspect and approve each joint preparation, assembly practice, welding technique, joint fit-up, and the performance of each welder, welding operator, and tack welder to make certain that the applicable requirements of this code and the approved Welding Procedure Specification (WPS) are met. The QC Inspector shall examine the work to make certain that it meets the requirements of Sections 3 and 6.26. The size and contour of all welds shall be measured using suitable gages. Visual inspection for cracks in welds and base metal, and for other discontinuities should be aided by strong light magnifiers, or such other devices as may be helpful. Acceptance criteria different from those specified in this code may be used when approved by the Engineer.

Section 6.6.5, "Nonspecified NDT Other than Visual," of AWS D1.1, Section 6.6.5 of AWS D1.4 and Section 6.6.5 of AWS D1.5 shall not apply.

For any welding, the Engineer may direct the Contractor to perform NDT that is in addition to the visual inspection or NDT specified in the AWS or other specified welding codes, in the Standard Specifications, or in these special provisions. Additional NDT required by the Engineer will be paid for as extra work as provided in Section 4-1.03D, "Extra Work," of the Standard Specifications. Should any welding deficiencies be discovered by this additional NDT, all costs associated with the repair of the deficient area, including NDT of the weld and of the weld repair, and any delays caused by the repair, shall be at the Contractor's expense.

Repair work to correct welding deficiencies discovered by visual inspection or NDT, or by additional NDT directed or performed by the Engineer, and any associated delays or expenses caused to the Contractor by performing these repairs, shall be at the Contractor's expense.

The Engineer shall have the authority to verify the qualifications or certifications of any welder, QC Inspector, or NDT personnel to specified levels by retests or other means approved by the Engineer.

Continuous inspection shall be provided when any welding is being performed. Continuous inspection, as a minimum, shall include having a QC Inspector within such close proximity of all welders or welding operators so that inspections by the QC Inspector of each welding operation at each welding location shall not lapse for a period exceeding 30 minutes.

Inspection and approval of all joint preparations, assembly practices, joint fit-ups, welding techniques, and the performance of each welder, welding operator, and tack welder shall be documented by the QC Inspector on a daily basis for each day welding is performed. For each

CONTRACT NO. 04-012024
CONTRACT CHANGE ORDER NO 69
SHEET 37 OF 113

inspection, including fit-up, Welding Procedure Specification (WPS) verification, and final weld inspection, the QC Inspector shall confirm and document compliance with the requirements of the AWS or other specified code criteria and the requirements of these special provisions on all welded joints before welding, during welding, and after the completion of each weld.

When joint weld details that are not prequalified to the details of Section 3 of AWS D1.1 or to the details of Figure 2.4 or 2.5 of AWS D1.5 are proposed for use in the work, the joint details, their intended locations, and the proposed welding parameters and essential variables, will be approved by the Engineer. The Engineer shall have 2 weeks to complete the review of the proposed joint detail locations. In the event the Engineer fails to complete the review within the time allowed, and if, in the opinion of the Engineer, completion of the work is delayed or interfered with by reason of the Engineer's delay in completing the review, the Contractor will be compensated for any resulting loss, and an extension of time will be granted, in the same manner as provided for in Section 8-1.09, "Right of Way Delays," of the Standard Specifications. Upon approval of the proposed joint detail locations and qualification of the proposed joint details, welders and welding operators using these details shall perform a qualification test plate using the WPS variables and the joint detail to be used in production. The test plate shall have the maximum thickness to be used in production and a minimum length of 180 mm and minimum finish welded width 460 mm. The test plate shall be mechanically and radiographically tested. Mechanical and radiographic testing and acceptance criteria shall be as specified in the applicable AWS codes.

In addition to the requirements specified in the applicable code, the period of effectiveness for a welder's or welding operator's qualification shall be a maximum of 3 years for the same weld process, welding position, and weld type. If production welding will be performed without gas shielding, then qualification shall also be without gas shielding. Excluding welding of fracture critical members, a valid qualification at the beginning of work on a contract will be acceptable for the entire period of the contract, as long as the welder's or welding operator's work remains satisfactory.

The Engineer will witness all qualification tests for WPSs that were not previously approved by the Department. An approved independent third party will witness the qualification tests for welders or welding operators. The independent third party shall be a current CWI and shall not be employed by the contractor performing the welding. The Engineer shall have 2 weeks to review the qualifications and copy of the current certification of the independent third party. In the event the Engineer fails to complete the review within the time allowed, and if, in the opinion of the Engineer, completion of the work is delayed or interfered with by reason of the Engineer's delay in completing the review, the Contractor will be compensated for any resulting loss, and an extension of time will be granted, in the same manner as provided for in Section 8-1.09, "Right of Way Delays," of the Standard Specifications. The Contractor shall notify the Engineer one week prior to performing any qualification tests. Witnessing of qualification tests by the Engineer shall not constitute approval of the intended joint locations, welding parameters, or essential variables.

In addition to the requirements of AWS D1.5 Section 5.12 or 5.13, welding procedures qualification, for work welded in conformance with that code, shall conform to the following requirements:

A. Unless considered prequalified, fillet welds, including reinforcing fillet welds, shall be qualified in each position. The fillet weld soundness test shall be conducted using the essential variables of the WPS as established by the Procedure Qualification Record (PQR.)

CONTRACT NO. 04-012024
CONTRACT CHANGE ORDER NO 69
SHEET 38 OF 113

B. For qualification of joints that do not conform to Figures 2.4 and 2.5 of AWS D1.5, two WPS qualification tests are required. The tests conforming to AWS D1.5 Section 5.13 shall be conducted using both Figure 5.1 and Figure 5.3. The test conforming to Figure 5.3 shall be conducted using the same welding electrical parameters that were established for the test conducted conforming to Figure 5.1.

C. The travel speed, current, and voltage values that are used for tests conducted per AWS D1.5 Section 5.12 or 5.13 shall be consistent for each weld joint, and shall in no case vary by more than 10 percent for travel speed, 10 percent for current, and 7 percent for voltage.

D. For a WPS qualified in conformance with AWS D1.5 Section 5.13, the values to be used for calculating ranges for current and voltage shall be based on the average of all weld passes made in the test. Heat input shall be calculated using the average of current and voltage of all weld passes made in the test for a WPS qualified in conformance with Section 5.12 or 5.13.

E. To qualify for unlimited material thickness, two qualification tests are required for WPSs utilized for welding material thicknesses greater than 38 mm. One test shall be conducted using 20-mm thick test plates, and one test shall be conducted using test plates with a thickness between 38 mm and 50 mm. Two maximum heat input tests may be conducted for unlimited thickness qualification.

F. Macroetch tests are required for WPS qualification tests, and acceptance shall be per AWS D1.5 Section 5.19.3.

G. When a weld joint is to be made using a combination of qualified WPSs, each process shall be qualified separately.

H. When a weld joint is to be made using a combination of qualified and prequalified processes, the WPS shall reflect both processes and the limitations of essential variables, including weld bead placement, for both processes.

I. Prior to preparing mechanical test specimens, the PQR welds shall be inspected by visual and radiographic tests. Backing bar shall be 75 mm in width and shall remain in place during NDT testing. Results of the visual and radiographic tests shall comply with AWS D1.5 Section 6.26.2, excluding Section 6.26.2.2. Test plates that do not comply with both tests shall not be used.

WELDING QUALITY CONTROL

Welding quality control shall conform to the requirements in the AWS or other specified welding codes, the Standard Specifications, and these special provisions.

Unless otherwise specified, welding quality control shall apply when any work is welded in conformance with the provisions in Section 49, "Piling," Section 52, "Reinforcement," Section 55, "Steel Structures," or Section 75-1.035, "Bridge Joint Restrainer Units," of the Standard Specifications.

The welding of fracture critical members (FCMs) shall conform to the provisions specified in the Fracture Control Plan (FCP) and herein.

The Contractor shall designate in writing a welding Quality Control Manager (QCM). The QCM shall be responsible directly to the Contractor for the quality of welding, including materials and workmanship, performed by the Contractor and subcontractors.

The QCM shall be the sole individual responsible to the Contractor for submitting, receiving, reviewing, and approving all correspondence, required submittals, and reports to and from the Engineer. The QCM shall be a registered professional engineer or shall be currently certified as a CWI or a CAWI.

CONTRACT NO. 4-0024 CONTRACT CHANGE ORDER NO 69
SHEET 39 OF 113

The QCM shall not be employed or compensated by any subcontractor, or by other persons or entities hired by subcontractors, who will provide other services or materials for the project. The QCM may be an employee of the Contractor.

Welding inspection personnel or NDT firms to be used in the work shall not be employed or compensated by any subcontractor, or by other persons or entities hired by subcontractors, who will provide other services or materials for the project, except for the following conditions:

A. The work is welded in conformance with AWS D1.5 and is performed at a permanent fabrication or manufacturing facility which is certified under the AISC Quality Certification Program, Category Cbr, Major Steel Bridges and Fracture Critical endorsement F.
B. The welding is performed on pipe pile material at a permanent pipe manufacturing facility authorized to apply the American Petroleum Institute (API) monogram for API 5L pipe.

For welding performed at such facilities, the inspection personnel or NDT firms may be employed or compensated by the facility performing the welding.

Prior to submitting the Welding Quality Control Plan (WQCP) required herein, a pre-welding meeting between the Engineer, the Contractor's QCM, and a representative from each entity performing welding or inspection for this project, shall be held to discuss the requirements for the WQCP.

The Contractor shall submit to the Engineer, in conformance with the provisions in Section 5-1.02, "Plans and Working Drawings," of the Standard Specifications, 2 copies of a separate WQCP for each subcontractor or supplier for each item of work for which welding is to be performed.

The Contractor shall allow the Engineer 2 weeks to review the WQCP submittal after a complete plan has been received. No welding shall be performed until the WQCP is approved in writing by the Engineer. In the event the Engineer fails to complete the review within the time allowed, and if, in the opinion of the Engineer, completion of the work is delayed or interfered with by reason of the Engineer's delay in completing the review, the Contractor will be compensated for any resulting loss, and an extension of time will be granted, in the same manner as provided for in Section 8-1.09, "Right of Way Delays," of the Standard Specifications.

An amended WQCP or any addendum to the approved WQCP shall be submitted to, and approved in writing by the Engineer, for proposed revisions to the approved WQCP. An amended WQCP or addendum will be required for revisions to the WQCP, including but not limited to a revised WPS; additional welders; changes in NDT firms, QC, or NDT personnel or procedures; or updated systems for tracking and identifying welds. The Engineer shall have 1 week to complete the review of the amended WQCP or addendum. Work affected by the proposed revisions shall not be performed until the amended WQCP or addendum has been approved. In the event the Engineer fails to complete the review within the time allowed, and if, in the opinion of the Engineer, completion of the work is delayed or interfered with by reason of the Engineer's delay in completing the review, the Contractor will be compensated for any resulting loss, and an extension of time will be granted, in the same manner as provided for in Section 8-1.09, "Right of Way Delays," of the Standard Specifications.

Information regarding the contents, format, and organization of a WQCP, is available at the Transportation Laboratory or the following website:

http://www.dot.ca.gov/hq/esc/Translab/smbresources.htm

CONTRACT NO. 04-012024 CONTRACT CHANGE ORDER NO 69
SHEET 40 OF 113

After final approval of the WQCP, amended WQCP, or addendum, the Contractor shall submit 7 copies to the Engineer of the approved documents. A copy of the Engineer approved document shall be available at each location where welding is to be performed.

A daily production log for welding shall be kept for each day that welding is performed. The log shall clearly indicate the locations of all welding. The log shall include the welders' names, amount of welding performed, any problems or deficiencies discovered, and any testing or repair work performed, at each location. The daily report from each QC Inspector shall also be included in the log.

The following items shall be included in a Welding Report that is to be submitted to the Engineer within 10 days following the performance of any welding:

A. Reports of all visual weld inspections and NDT.
B. Radiographs and radiographic reports, and other required NDT reports.
C. Documentation that the Contractor has evaluated all radiographs and other nondestructive tests and corrected all rejectable deficiencies, and all repaired welds have been reexamined by the required NDT and found acceptable.
D. Daily production log.

The following information shall be clearly written on the outside of radiographic envelopes: name of the QCM, name of the nondestructive testing firm, name of the radiographer, date, contract number, complete part description, and all included weld numbers or a report number, as detailed in the WQCP. In addition, all innerleaves shall have clearly written on them the part description and all included weld numbers, as detailed in the WQCP.

Reports regarding NDT shall be signed by both the NDT technician and the person that performed the review, and then submitted directly to the QCM for review and signature prior to submittal to the Engineer. Corresponding names shall be clearly printed or typewritten next to all signatures.

The Engineer will review the Welding Report to determine if the Contractor is in conformance with the WQCP. Unless otherwise specified, the Engineer shall be allowed 10 days to review the report and respond in writing after a complete Welding Report has been received. Prior to receiving notification from the Engineer of the Contractor's conformance with the WQCP, the Contractor may encase in concrete or cover welds for which a Welding Report has been submitted. However, should the Contractor elect to encase or cover those welds prior to receiving notification from the Engineer, it is expressly understood that the Contractor shall not be relieved of the responsibility for incorporating material in the work that conforms to the requirements of the plans and specifications. Material not conforming to these requirements will be subject to rejection. Should the Contractor elect to wait to encase or cover welds pending notification by the Engineer, and in the event the Engineer fails to complete the review within the time allowed, and if, in the opinion of the Engineer, completion of the work is delayed or interfered with by reason of the Engineer's delay in completing the review, the Contractor will be compensated for any resulting loss, and an extension of time will be granted, in the same manner as provided for in Section 8-1.09, "Right of Way Delays," of the Standard Specifications.

The QC Inspector shall provide reports to the QCM on a daily basis for each day that welding is performed.

Except for noncritical weld repairs, the Engineer shall be notified immediately in writing when welding problems, deficiencies, base metal repairs, or any other type of repairs not submitted in the WQCP are discovered, and also of the proposed repair procedures to correct them. The Contractor shall allow the Engineer one week to review these procedures. No remedial work shall begin until the repair procedures are approved in writing by the Engineer. In

the event the Engineer fails to complete the review within the time allowed, and if, in the opinion of the Engineer, completion of the work is delayed or interfered with by reason of the Engineer's delay in completing the review, the Contractor will be compensated for any resulting loss, and an extension of time will be granted, in the same manner as provided for in Section 8-1.09, "Right of Way Delays," of the Standard Specifications.

The QCM shall sign and furnish to the Engineer, a Certificate of Compliance in conformance with the provisions in Section 6-1.07, "Certificates of Compliance," of the Standard Specifications for each item of work for which welding was performed. The certificate shall state that all of the materials and workmanship incorporated in the work, and all required tests and inspections of this work, have been performed in conformance with the details shown on the plans, the Standard Specifications, and these special provisions.

CONTRACT NO. 04-0120R4

CONTRACT CHANGE ORDER NO 69

SHEET 41 OF 113

PAYMENT

Full compensation for conforming to the requirements of "Welding" shall be considered as included in the contract prices paid for the various items of work involved and no additional compensation will be allowed therefor.

CONTRACT NO. 04-012024

CONTRACT CHANGE ORDER NO 69

SHEET 42 OF 113

SECTION 9. (BLANK)

SECTION 10. CONSTRUCTION DETAILS

SECTION 10-1. GENERAL

CONTRACT NO. 04-0120R4

CONTRACT CHANGE ORDER NO 69

SHEET 43 OF 113

10-1.01 ORDER OF WORK

Order of work shall conform to the provisions in Section 5-1.05, "Order of Work," of the Standard Specifications and these special provisions.

Contractor shall provide specifications and detailed shop drawings to the Engineer for the proposed sewer work, including the pipe manufacturer's names and product identification, and details for the type and location of all fittings, joints and connections to structures. The new manhole and pump shall be installed before the demolition of the existing pump station and manhole to minimize the down time of the facility.

CONTRACT NO. 04-0120R4

CONTRACT CHANGE ORDER NO 69

SHEET 44 OF 113

10-1.09 TEMPORARY RAILING

Temporary railing (Type K) shall be placed as shown on the plans, as specified in the Standard Specifications or these special provisions or where ordered by the Engineer and shall conform to the provisions in Section 12, "Construction Area Traffic Control Devices," of the Standard Specifications and these special provisions.

Reflectors on temporary railing (Type K) shall conform to the provisions in "Prequalified and Tested Signing and Delineation Materials" of these special provisions.

Temporary railing (Type K) shall conform to the details shown on Standard Plan T3. Temporary railing (Type K) fabricated prior to January 1, 1993, and conforming to 1988 Standard Plan B11-30 may be used, provided the fabrication date is printed on the required Certificate of Compliance.

Attention is directed to "Public Safety" and "Order of Work" of these special provisions.

Temporary railing (Type K) placed in conformance with the provisions in "Public Safety" of these special provisions will be neither measured nor paid for.

CONTRACT NO. 04-012084

CONTRACT CHANGE ORDER NO 69

SHEET 45 OF 113

10-1.10 EXISTING HIGHWAY FACILITIES

The work performed in connection with various existing highway facilities shall conform to the provisions in Section 15, "Existing Highway Facilities," of the Standard Specifications and these special provisions.

CONTRACT NO. 04-0120R4

CONTRACT CHANGE ORDER NO 69

SHEET 46 OF 113

REMOVE SEWER MANHOLE

Existing manholes, at the locations shown on the plans as remove or to be demolished, shall be removed and disposed of.

Removed frames and covers shall be disposed of.

The contract unit price paid for remove sewer manhole shall include full compensation for furnishing all labor, materials, tools, equipment, and incidentals and for doing all work involved in removing manhole complete in place, including concrete base, pipe risers, as shown on the plans, as specified in the Standard Specifications and these special provisions, and as directed by the engineer.

CONTRACT NO. 04-0120R4

CONTRACT CHANGE ORDER NO 69

SHEET 47 OF 113

CONTRACT NO. 01-0120R4 CONTRACT CHANGE ORDER NO 69
SHEET 48 OF 113

REMOVE CHAIN LINK FENCE

Existing chain link fence, including post footings, at the locations shown on the plans, shall be removed and disposed of.

Full compensation for removing and disposing of excess fence shall be considered as included in the contract price paid per meter for remove chain link fence and no separate payment will be made therefor.

REMOVE PIPE LINE

Existing water mains, and sewers, where shown on the plans to be removed, shall be removed and disposed of. Resulting openings into existing structures that are to remain in place shall be plugged with commercial quality concrete containing not less than 300 kg of cement per cubic meter.

Full compensation for concrete plugs, pipe removal, structure excavation, and backfill (including sand, controlled low strength material or slurry cement backfill) shall be considered as included in the contract unit price paid for remove water mains, and sewers and no additional compensation will be allowed therefor.

DEMOLISH PUMP STATION

This work shall consist of demolition and disposal of the existing pump station as shown on the plans, as specified in these special provisions, and as directed by the Engineer.

Scope of Work

The Contractor and/or subcontractors shall be properly licensed in accordance with the laws of the State of California and shall possess a Class C-21 license, CAL-OSHA permit and a Hazardous Substance Removal Certificate (HAZ) if any hazardous substances are discovered and the discovery requires removal. The Contractor shall provide all labor, equipment, supplies, permits and materials necessary to remove and demolish commercial structure, and abate all hazardous materials, according to all environmental laws and regulations. The work shall be done in accordance with all city and/or county codes/regulations. The structures are to be demolished and removed out of the State right of way.

The extent of demolition and disposal work shall consist of demolishing and removing structures, foundations, footings and other improvements including, but not limited to, the removal of siding, concrete blocks, plants, shrubs, trees, fences, walls, decks, sheds, doors and windows, concrete tanks, capping of sewer lines, slabs, stairs and landings, loading docks, steps, footings, foundations, pipe, brick, flatwork, plaster, lumber, wood splinters, trash, debris, glass, and abate all friable and non-friable asbestos and lead paint, according to all environmental laws and regulations. The Contractor shall also ensure that the proper notifications be made to the respective utility companies for the removal of meters or the disconnecting, capping or sealing, and abandoning in place of all site utilities. All demolished items shall be removed and legally disposed of outside of the State right of way, unless indicated to be salvaged or recycled by the Engineer.

CONTRACT NO. 04-012024 CONTRACT CHANGE ORDER NO 69
SHEET 49 OF 113

Prior to the demolition work, the Contractor shall submit a schedule of pump station demolition activities to the Engineer for approval. The schedule shall indicate the following:

1. Proper Notification, time frames
2. Detailed sequence of demolition and removal work, with starting and ending dates for each.
3. Interruption of utility services.
4. Coordination for shutoff, capping, and continuation of utility services.
5. Locations of temporary protection

Backfill

The Contractor shall take all measures necessary to protect the public from basement excavations, holes, or vertical drops exposed or produced by his or her operations. The Contractor shall backfill such excavations, holes, or drops. Backfill shall be made with clean earth consisting of alluvium, decomposed granite, loam or sand. No material containing adobe or other substances, which would swell or contract with the addition of water or containing debris or large rocks will be accepted. Backfill within the limits of the State right of way shall be completed to the surface of the ground and unless otherwise specified, shall be placed in horizontal uniform layers not to exceed 20 cm in thickness before compaction.

Concrete & Debris Removal

The Contractor shall remove and dispose of all concrete, including concrete footings, 1 m below adjoining grade, flatwork , and miscellaneous rubble. Likewise, all brick, plaster, lumber, wood splinters and other debris including shrubs shall be removed from the site and disposed of by the Contractor.

Items to be Salvaged

The existing Flygt pump and Paco pump in TIS041 shall be salvaged and returned to SFPUC/WWE. The check valves shall also be salvaged and returned to SFPUC/WWE. The Engineer shall contact Kris Kilgore (415-648-6882 x1323), or Vic Zorzynski (415-274-0333) of the SFPUC/WWE once the salvaged items are removed from the existing pump station.

Payment

The contract unit price paid to demolish the pump station shall include full compensation for furnishing all labor, materials, temporary facilities, backfill, salvaging existing pumps and valves, safety measures, tools, equipment, and incidentals, and for performing all the work involved in demolition and removal of the pump station as shown on the plans, as specified in these special provisions, and as directed by the Engineer.

10-1.11 CLEARING AND GRUBBING

Clearing and grubbing shall conform to the provisions in Section 16, "Clearing and Grubbing," of the Standard Specifications and these special provisions.

Vegetation shall be cleared and grubbed only within the excavation and embankment slope lines.

At locations where there is no grading adjacent to a bridge or other structure, clearing and grubbing of vegetation shall be limited to 1.5 m outside the physical limits of the bridge or structure.

Existing vegetation outside the areas to be cleared and grubbed shall be protected from injury or damage resulting from the Contractor's operations.

Activities controlled by the Contractor, except cleanup or other required work, shall be confined within the graded areas of the roadway.

Nothing herein shall be construed as relieving the Contractor of the Contractor's responsibility for final cleanup of the highway as provided in Section 4-1.02, "Final Cleaning Up," of the Standard Specifications.

10-1.12 EARTHWORK

Earthwork shall conform to the provisions in Section 19, "Earthwork," of the Standard Specifications and these special provisions.

CONTRACT NO. 04-0120R4

CONTRACT CHANGE ORDER NO 69

SHEET 50 OF 113

Surplus excavated material shall become the property of the Contractor and shall be disposed of in conformance with the provisions in Section 7-1.13, "Disposal of Material Outside the Highway Right of Way," of the Standard Specifications.

Reinforcement or metal attached to reinforced concrete rubble placed in embankments shall not protrude above the grading plane. Prior to placement within 0.6-m below the grading plane of embankments, reinforcement or metal shall be trimmed to no greater than 20 mm from the face of reinforced concrete rubble. Full compensation for trimming reinforcement or metal shall be considered as included in the contract prices paid per cubic meter for the types of excavation shown in the Engineer's estimate, or the contract prices paid for furnishing and placing imported borrow or embankment material, as the case may be, and no additional compensation will be allowed therefor.

Imported borrow shall be mineral material including rock, sand, gravel, or earth. The Contractor shall not use man-made refuse in imported borrow including:

A. Portland cement concrete,
B. Asphalt concrete,
C. Material planed from roadway surfaces,
D. Residue from grooving or grinding operations,
E. Metal,
F. Rubber,
G. Mixed debris,
H. Rubble

CONTRACT NO. 04-0120R4

CONTRACT CHANGE ORDER NO 69

SHEET 51 OF 113

10-1.13 HEALTH AND SAFETY PLAN

The Contractor shall prepare a Health and Safety Plan to prevent or minimize exposure to contaminants of concern. The Contractor's attention is directed to Title 8, California Code of Regulation, Section 5192 (b) (4)(B) Occupational Safety and Health Guidance Manual published by the National Institute of Occupational Safety and Health (NIOSH), Occupational Safety and Health Administration (OSHA), for elements of the site safety plan. The Health and Safety Plan shall contain as a minimum but not be limited to: identification of key personnel for the project, job hazard analysis for work assignments, summary of risk assessment, air monitoring plan, personal protective equipment, delineation of work zones on-site, decontamination procedures, general safe work practices, security measures, emergency response plans and worker training. The Health and Safety Plan shall be approved by the Contractor's Certified Industrial Hygienist before submission to the Engineer for review and acceptance. The plan shall be submitted to the Engineer at least 15 working days prior to beginning any work in the project area.

TRAINING

Personnel who have no prior training or are not current in their training status, including State personnel, shall complete a safety training program provided by the Contractor, which meets the requirement of Title 8, California Code of Regulations, Section 5192 (b). The Contractor shall provide a written certification of completion of safety training to the Engineer for all trained personnel prior to performing any work in areas containing contaminants of concern.

EQUIPMENT AND MEDICAL SURVEILLANCE

Personnel protective equipment, training, and medical surveillance required by the Contractor's Health and Safety Plan shall be provided to State personnel by the Contractor. The number of State personnel will be 2.

PAYMENT

The contract lump sum price paid for the Health and Safety Plan shall include full compensation for furnishing all labor, materials, tools, equipment, and incidentals and for doing all work involved in preparing and implementing the Health and Safety Plan including paying the Certified Industrial Hygienist and for providing personal protective equipment, training and medical surveillance as specified in these special provisions and as directed by the Engineer.

10-1.14 AGGREGATE SUBBASE

Aggregate subbase must comply with Section 25, "Aggregate Subbases," of the Standard Specifications and these special provisions.

Aggregate subbase must be Class 4.

Do not store reclaimed asphalt concrete or aggregate subbase with reclaimed asphalt concrete within 30 m measured horizontally of any culvert, watercourse, or bridge.

Class 4 aggregate subbase must comply with:

Grading (Percentage Passing)

Sieve Sizes	Operating Range	Contract Compliance
63-mm	100	100
4.75-mm	30-65	25-70
75-µm	0-15	0-18

Quality

Test	Operating Range	Contract Compliance
Sand Equivalent	21 Min.	18 Min.
Resistance (R-value)	----	50 Min.

If tests show grading or sand equivalent does not comply with the "Operating Range" specifications but complies with the "Contract Compliance" specifications, you may place aggregate subbase for the remainder of that day. Do not start another day's work until tests or other information indicate the next day's material complies with the "Operating Range" specifications.

If tests show grading or sand equivalent does not comply with the "Contract Compliance" specifications, remove the aggregate subbase represented by the tests. If you request and the Engineer approves, that aggregate subbase may remain in place and the Department reduces payment by $3.00 per cubic meter for that aggregate subbase. If the subbase remains in place and both the grading and sand equivalent do not comply with "Contract Compliance" specifications, the Department only makes one payment reduction.

No single grading or sand equivalent test may represent more than the smaller of 400 m^3 or one day's production.

Instead of Class 4 aggregate subbase, you may place Class 1 aggregate subbase complying with the aggregate grading and quality requirements in Section 25-1.02A, "Class 1, Class 2, and Class 3 Aggregate Subbases," of the Standard Specifications. If you place Class __ aggregate subbase, do not change back to Class 4 subbase without written approval from the Engineer.

Regardless of the aggregate subbase class supplied, the Department pays for aggregate subbase as Class 4 aggregate subbase.

10-1.15 AGGREGATE BASE

Aggregate base must comply with Section 26, "Aggregate Bases," of the Standard Specifications and these special provisions.

Aggregate base must be Class 3.

Do not store reclaimed asphalt concrete or aggregate base with reclaimed asphalt concrete within 30 m measured horizontally of any culvert, watercourse, or bridge.

Class 3 aggregate base must comply with:

CONTRACT NO. 04-0120R4

CONTRACT CHANGE ORDER NO 69

SHEET 53 OF 113

CONTRACT NO. 04-012024 CONTRACT CHANGE ORDER NO 69 SHEET 51 OF 113

Grading (Percentage Passing)

Sieve Sizes	Maximum	
	Operating Range	Contract Compliance
50-mm		
37.5-mm		
25-mm	100	100
19-mm	90-100	87-100
4.75-mm	35-60	30-65
600-µm	10-30	5-35
75-µm	2-9	0-12

Quality

Tests	Operating Range	Contract Compliance
Sand Equivalent		
Resistance (R-value)		

If tests show grading or sand equivalent does not comply with the "Operating Range" specifications but complies with the "Contract Compliance" specifications, you may place aggregate base for the remainder of that day. Do not start another day's work until tests or other information indicate the next day's material complies with the "Operating Range" specifications.

If tests show grading or sand equivalent does not comply with the "Contract Compliance" specifications, remove the aggregate base represented by the tests. If you request and the Engineer approves, that aggregate base may remain in place and the Department reduces payment by $3.25 per cubic meter for that aggregate base. If the base remains in place and both the grading and sand equivalent do not comply with "Contract Compliance" specifications, the Department only makes one payment reduction.

No single grading or sand equivalent test may represent more than the smaller of 400 m^3 or one day's production.

10-1.16 ASPHALT CONCRETE

Asphalt concrete shall be Type _A__ and shall conform to the provisions in Section 39, "Asphalt Concrete," of the Standard Specifications and these special provisions.

The grade of asphalt binder to be mixed with aggregate for Type _A__ asphalt concrete shall be Grade _PG 64-10 conforming to the provisions in Section 92, "Asphalts," of the Standard Specifications.

The amount of asphalt binder used in asphalt concrete placed in dikes, gutters, gutter flares, overside drains and aprons at the ends of drainage structures shall be increased one percent by mass of the aggregate over the amount of asphalt binder determined for use in asphalt concrete placed on the traveled way.

The asphalt content of the asphalt mixture will be determined in conformance with the requirements in California Test 379, or in conformance with the requirements in California Test 382.

Paint binder (tack coat) shall be applied to existing surfaces to be surfaced and between layers of asphalt concrete, except when eliminated by the Engineer.

Paint binder (tack coat) shall be, at the option of the Contractor, either slow-setting asphaltic emulsion, rapid-setting asphaltic emulsion or paving asphalt. Slow-setting asphaltic emulsion and rapid-setting asphaltic emulsion shall conform to the provisions in Section 39-4.02, "Prime Coat and Paint Binder (Tack Coat)," and the provisions in Section 94, "Asphaltic Emulsions," of

the Standard Specifications. When paving asphalt is used for paint binder, the grade will be determined by the Engineer. Paving asphalt shall conform to the provisions in Section 39-4.02, "Prime Coat and Paint Binder (Tack Coat)," and the provisions in Section 92, "Asphalts," of the Standard Specifications.

Paint binder (tack coat) shall be applied in the liter per square meter range limits specified for the surfaces to receive asphalt concrete in the tables below. The exact application rate within the range will be determined by the Engineer.

CONTRACT NO. 04-0120R4

CONTRACT CHANGE ORDER NO 69

SHEET 55 OF 113

10-1.17 REINFORCEMENT

Reinforcement shall conform to the provisions in Section 52, "Reinforcement," of the Standard Specifications and these special provisions.

The Department's mechanical splices prequalified list can be found at the following internet site:

http://www.dot.ca.gov/hq/esc/approved_products_list/

The provisions of "Welding Quality Control" of these special provisions shall not apply to resistance butt welding.

MEASUREMENT AND PAYMENT

Measurement and payment for reinforcement in structures shall conform to the provisions in Section 52-1.10, "Measurement," and Section 52-1.11, "Payment," of the Standard Specifications and these special provisions.

10-1.18 SANITARY SEWER LIFT STATION

A sanitary sewer lift station shall be furnished and installed in conformance with the details shown on the plans and these special provisions.

A sanitary sewer lift station shall consist of shaft, duplex pumps with motors, pump enclosure, foundation, pipe, fittings, valves, controls and appurtenances necessary for the satisfactory operation of the sanitary sewer lift station. Service equipment and electrical equipment shall conform to the provisions in Section 10-3 of these special provisions. Incidental material or equipment not mentioned in these special provisions or shown on the plans, which may be necessary for completion and satisfactory operation of the sanitary sewer lift station, shall be furnished and installed.

All components of the sanitary sewer lift station shall be warranted for two years from date of first operation.

MATERIALS LIST AND DRAWINGS

In conformance with the provisions in Section 5-1.02, "Plans and Working Drawings," of the Standard Specifications, the Contractor shall submit, within 15 days after approval of the contract, a list of materials which the Contractor proposes to furnish and install for the sanitary sewer lift station together with the drawings and other data as specified below:

A. The materials list shall be a complete listing of the manufacturer, catalog number, size, and capacity of the manufactured articles. There shall be a working drawing for the sanitary sewer lift station showing the pump details, piping, and equipment as planned to be furnished and installed and for other materials to be fabricated for the installation. Directions for maintenance and adjustment of the pump shall be furnished to the Engineer as well as a manufacturer's certified performance characteristics curve diagram for the pump.
B. The data submitted shall be labeled with a descriptive title, project description and contract number of the project.

At least 4 copies of the data shall be initially submitted to the Engineer for approval. The Engineer will review the submitted data and will return to the Contractor either one set for correction or 2 sets that have been approved.

CONTRACT NO. 94-01204
CONTRACT CHANGE ORDER NO 67
SHEET 57 OF 113

After approval, 6 sets of Operation and Maintenance Manuals for the sanitary sewer lift station shall be submitted.

The State shall not be liable for materials purchased or labor performed, prior to approval of the drawings and materials list, and will not be responsible for any delay to the Contractor pending review of the drawings and information submitted after the 15-day period mentioned.

PUMP AND MOTOR

Pumps shall be heavy-duty, submersible, non-clog, centrifugal, quick disconnect pumps. The pumps shall be a Flygt Model NP3102.090 with 5 hp motor. Power supplied will be 208 volt 3 phase.

Pump Construction

A. General: The pumps shall be designed to permit ground-level removal of pumping units from the wet well for inspection or service without disconnecting or disturbing the discharge piping. The pump connection shall be metal to metal. The design shall permit the pumps when lowered into place to be automatically connected to the discharge piping by positively locking the volute in position to prevent any axial or lateral movement. There shall be no need for personnel to enter the wet well when pump inspection or service is required.

B. Piping, fittings, and Appurtenances: Each pump shall be furnished with quick-disconnect discharge elbow, AISI Type 316 stainless steel standard pipe rails, upper guide rail bracket, intermediate guide rail bracket, rail-guided lifting assembly and AISI Type 316 stainless steel chain of sufficient strength to raise and lower pump. All miscellaneous metal within the wet well shall be stainless steel. Anchor bolts shall be stainless steel.

C. Pump Castings: Castings and other major pump components shall be of grey cast iron, ASTM A-48, Class 35B, shall be of cast iron and free from blowholes, porosity, hard spots, shrinkage defects, cracks, and other injurious defects. All metal surfaces coming into contact with the sewage, other than stainless steel or brass, shall be protected by a factory applied spray coating of acrylic dispersion zinc phosphate primer with a polyester resin paint finish on the exterior of the pump. The casings shall be designed to permit replacement of wearing parts. Joints shall be properly sealed with Nitrile or Viton rubber O-rings and shall not leak under a test pressure equal to 50 percent greater than the pump shut-off pressure. Passageways shall permit smooth flow and shall be free from sharp turns and projections.

D. Impellers: Impellers shall be of (spheroidal graphite) gray iron class 35B, cast steel, or an alloy suitable for the service required. The impellers shall be smooth and free flowing and shall have sufficient clearance to permit 75 mm objects in the sanitary waste water that enter the pump to pass into the discharge pipe. Each impeller shall be accurately fitted and keyed, splined, or threaded on the shaft, and locked in such a manner that lateral movement will be prevented and reverse rotation will not cause loosening.

E. Balance: All rotating parts of the equipment shall be in such balance, mechanically and hydraulically, as to operate without excessive end thrust, vibration or noise.

F. Shafts: Shafts shall be steel, and be provided with alignment bearings.

G. Bearings: Bearings subject to submersion shall be ball bearings manufactured from high-grade bearing alloy.

H. Mechanical Seals: Each pump shall be equipped with tungsten carbide seals.

I. The Power cable shall be sized according to the NEC and ICEA standards and shall be of sufficient length to reach the junction box without the need of any splices. The outer jacket of the cable shall be oil resistant chloroprene rubber. The motor and cable shall be

CONTRACT NO. 04-012024
CONTRACT CHANGE ORDER NO 69
SHEET 58 OF 113

capable of continuous submergence underwater without loss of watertight integrity to a depth of 65 feet. The cable entry seal design shall preclude specific torque requirements to insure a watertight and submersible seal. The cable entry shall consist of a single cylindrical elastomer grommet, flanked by washers, all having a close tolerance fit against the cable outside diameter and the entry inside diameter and compressed by the body containing a strain relief function, separate from the function of sealing the cable. The assembly shall provide ease of changing the cable when necessary using the same entry seal. The cable entry junction chamber and motor shall be separated by a stator lead sealing gland or terminal board, which shall isolate the interior from foreign material gaining access through the pump top. Epoxies, silicones, or other secondary sealing systems shall not be considered acceptable.

J. Electrical motors: Submersible, and the following requirements:

1. Air filled (not oil filled) squirrel cage induction type
2. Service factor of 1.15 or better
3. Class F insulation, Class B temperature rise
4. Rated for 6 starts per hour
5. Listed by either UL or FM for Class 1, Division 1, Groups C and D hazardous locations
6. Suitable for operating either in free air or continuously submerged in sewage
7. Bearing B10 life 18,000 hours minimum
8. Tungsten carbide seals
9. Lower bearings of either the ball or roller type
10. Provide a moisture detection system and a motor winding thermostat system, connected to the station control panel.

These systems shall be complete, including all necessary interfaces, control panels, conduits, and wires, even though these may not be shown on the Drawings.

Miscellaneous Materials: Bolts, nuts, anchors, washers, and all other types of support necessary for the installation of the pumps and drive units shall be provided and shall be of stainless steel.

Shop Painting: Pump, motor, and accessories shall be factory applied and finish painted in accordance with the manufacturer's standard.

Tools and Spare Parts: The pumps shall be furnished with a full set of manufacturer's recommended spare parts and special tools and maintenance instructions.

PIPE, VALVES, JOINTS AND FITTINGS

Valves shall be the type shown on the plans and shall be Class 125 unless otherwise shown on the plans.

Gate valves shall be iron body, wedge gate type with bronze trim and non-rising stem.

Check valves shall have cast iron body and gate, flanged ends, and bronze trim. The valves shall be the spring-loaded lever type for nonslamming under the conditions of operation and shall have stainless steel spring and shaft.

Pipes and fittings for piping 4 NPS or greater shall be ductile iron.

Ductile iron pipe shall be restrained, push-on joint pipe conforming to ANSI/AWWA C151/A21.51.

Restrained push-on joints for ductile iron pipe shall conform to ANSI/AWWA C111/A21.11. The joints shall be boltless, non-compression, non-threaded with synthetic rubber gasket seals and have a positive-locking device to keep the connection from separating. The pipe joints shall

CONTRACT NO. 04-012049 CONTRACT CHANGE ORDER NO 69
SHEET 59 OF 113

be designed for a working pressure of 2,413 Kpa and be capable of deflecting after assembly. Fittings and flanges for ductile iron pipe shall conform to ANSI/AWWA C110/A21.10, except for the manufacturer's proprietary design dimensions for restrained push-on joint pipe.

Ductile iron pipe and fittings shall have cement mortar lining and seal coating conforming to ANSI/AWWA C104/A21.4. Pipe shall have an asphaltic coating and/or polyethylene encasement outside coating conforming to ANSI/AWWA C151/A21.51, and fittings shall have an asphaltic coating and/or polyethylene encasement outside coating conforming to ANSI/AWWA C110/A21.10.

Pipe supports

All anchor bolts, nuts, pipe clamps, and other fittings shall be suitable for the type and size of the lines or casing, and shall conform to the provisions in Section 75-1.03, "Miscellaneous Bridge Metal", of the Standard Specifications.

Locate pipe supports as indicated in the plans. Unless stated otherwise, use AISI type 316 stainless steel for fabrication of pipe supports and stainless steel heavy hex head bolts with hardened washers and heavy hex nuts for bolted connections. Pipe supports shall be fabricated and installed according to MSS SP-58 and SP-69.

Dimensions and elevations for supports are the responsibility of the contractor and should be confirmed in the field prior to fabrication and installation.

Link Type Penetration Seal

The pipe to wall penetration closures shall be a modular mechanical type consisting of interlocking synthetic rubber links shaped to continuously fill the annular space between pipe and wall opening. Once expanded, the seal shall provide a watertight seal between pipe and wall. Pressure end plates shall be manufactured of glass reinforced plastic with a tensile strength of 186 mPa.

WET WELL

The wet well shall consist of precast wet well barrel sections as shown on the plans and in accordance with Section 70 1.02H "Precast Concrete Structures" of the Standard Specifications. The barrel sections shall conform to ASTM C-478 with single groove rubber joint gaskets. The concrete rings shall consist of Type II / Type V cement with appropriate corrosion protection against contaminated soils.

VALVE BOXES

Valve boxes shall conform to the provisions in Section 20-2.24, "Valve Boxes" of the Standard Specifications. A floor drain with deep trap shall be provided to drain the valve box to the wet well.

FOUNDATIONS

Concrete for foundations and pads shall be minor concrete and shall contain not less than 325 kg of portland cement per cubic meter. Type II / Type V cement with appropriate corrosion protection against contaminated soils shall be used for all concrete foundations and pads.

PRESSURE GAGES

Pressure gages shall be the dial type, shall be clear glycerin filled with a 65-mm minimum diameter weathertight epoxy case, and shall have accuracy within 3 percent of the full scale reading.

PUMP CONTROL

Panel

The pump control panel enclosure shall be 14 gauge 316 stainless steel. Panel shall have removable door, hinges constructed of 316 stainless steel and stainless steel hinge pins. Enclosure standards shall meet UL 508 for NEMA 4X. Enclosure shall comply with NEMA Type 4 and IEC 529, IP66. Back panel construction shall be 12 gauge steel. Swing panel shall maintain UL and NEMA ratings when installed. All operational status components shall be mounted on the swing panel. A single-phase 20 amp outlet shall be provided.

Controls

Station controls shall include the following:

A. Lockable external disconnect switch.
B. Motor starters, NEMA rated and sized for the next largest size (7.5 hp) pump motors.
C. 12 20amp-1-pole Circuit breakers, molded case and rated for short-circuit current.
D. Control power transformer with primary and secondary circuit breakers.
E. A 120V-12v dc for telemetering
F. Two circuit breakers for the pumps and two contactors
G. Transfer switch with receptacle to connect portable emergency generator. The switch enclosure shall be 316 stainless steel, NEMA 4X.

    1. Transfer switch shall be manually operated, 100 Amp, 240 V, 3 phase.
    2. Receptacle shall be four-wire, four-pole Crouse-Hinds Catalog AR1041 model M3 or equal.

H. MultitSmart Pump Control System. In order to maintain consistency in operation, control, programming, data collection, maintenance and spare parts, the pump control system shall be a MultiSmart Pump Controller and RTU as manufactured by MultiTrode Inc. USA, (561)994-8090, www.multitrode.com. The Controller shall interface with an existing OMNEX wireless system. The following boards shall be included:

    1. Pump Control/General I/O
    2. CPU Board
    3. DSP Board
    4. Motor Protection

I. Rechargeable battery system of sufficient voltage and capacity to maintain all electronic systems for 12 hours.
J. The level indicator shall be of the conductance probe type compatible with the MultiSmart Pump Control System. The probe shall be constructed from PVC tubing with molded sensor units at regular intervals along the probe. Each sensor unit shall be PVC injected to prohibit ingress of moisture, and the sensor material shall be stainless steel. The probe shall be suspended on its own cable and connected to a stainless steel hook which shall hang from a stainless steel angle containing a polyurethane squeegee pad positioned in the opening into the wet well, so that the probe can be removed without entering the wet well. The squeegee shall have a hole and slot, enabling the probe to be pulled through and cleaned. Probe cable shall be run in a separate conduit away from any high voltage cables. Ten sensors shall be spaced along the length of the probe assembly,

CONTRACT NO. 04-0120K4
CONTRACT CHANGE ORDER NO 69
SHEET 61 OF 113

each individually connected to a correspondingly numbered flexible cable. The molded sensor unit shall contain two sensors mounted on opposite sides of sensor unit. The probe shall be pressure injected with an epoxy resin to encapsulate all internal components and connections to form a rigid, homogenous unit. Each sensor unit containing the two sensors shall be rotated 90 degrees to the previous sensor unit to eliminate tracking between sensors. The cable shall be encoded with number and text along the entirety of the cable and at intervals not greater than 200mm for identification. The flexible cables shall be capable of supporting the weight of the probe and cable without the need for additional support. The cable shall be secured to the top of the probe by a synthetic rubber compression fitting.

INSTALLATION

Equipment shall be installed in accordance with manufacturer's instructions. Guide rails shall be secured in place. Each pump unit shall be connected to its corresponding discharge nozzle through the rail system. Smooth, correct operation of the lifting mechanism shall be demonstrated. Connect power and control cables and verify continuity and function.

Piping shall be supported as shown on the plans and in conformance with these special provisions. Pipes shall be held in place by hangers, supports, pipe rests, anchors, sway braces, guides or other special hangers. Allowances shall be made for expansion and contraction. Pipes shall have hangers or supports every 3 meters. Pipes shall be supported at each joint. Vertical pipes shall be supported with clamps or straps. Horizontal and vertical piping shall be securely supported and braced to prevent swaying, sagging or flexing of joints.

Cleaning and closing of pipe

The interior of all pipes shall be cleaned before installation. All openings shall be capped or plugged as soon as the pipe is installed to prevent the entrance of any materials. The caps or plugs shall remain in place until their removal is necessary for completion of the installation.

TESTING

Piping through the valve box shall be tested in accordance with the provisions in Section 20-5.03H(1), "Method A", of the Standard Specifications, with no leakage or pressure drop. The Contractor shall furnish pipe anchorages to resist thrust forces occurring during testing. All leaks shall be repaired, and all defective materials shall be replaced by the Contractor at the Contractors expense.

All pressure testing and necessary repairing of lines shall be completed prior to backfilling, or otherwise covering the lines.

Each end of line shall be capped prior to and after the testing

The Control System shall be initially programmed in default condition. All available signals shall be connected to the Pump Control System.

In addition to its standard programming, the unit shall be configured to alarm through the OMNEX wireless system to be installed by others.

MEASUREMENT AND PAYMENT

Quantities of sanitary sewer lift station will be measured by the unit as determined from actual count in place.

The contract unit price paid for sanitary sewer lift station shall include full compensation for furnishing all labor, materials, tools, equipment, and incidentals, and for doing all the work involved in furnishing and installing the sanitary sewer lift station, complete in place, including foundations, valve vaults, sewer manhole, pump enclosures, and excavation and backfill, as

shown on the plans, as specified in the Standard Specifications and these special provisions, and as directed by the Engineer.

CONTRACT NO. 04-0120R4

CONTRACT CHANGE ORDER NO 69

SHEET 62 OF 113

10-1.19 SEWER PIPE

Scope

This work shall consist of furnishing and installing Ductile Iron (DIP), Vitrified Clay (VCP), and Cast Iron (CIP) sewer pipes including excavating, lagging, backfilling and other incidental work, necessary or required for a complete, satisfactory sewer installation, in accordance with the details shown on the plans, these special provisions, and as directed by the Engineer.

Design Requirements

150 mm Ductile Iron Pipe

A. Ductile iron pipe shall be class 50 and comply with ANSI A21.51 (AWWA C151). Pipe joints shall comply with the following:

Type of Joint	Specification
Rubber Gasket Push-on Joint	ANSI A21.11 (AWWA C111)
Mechanical Joint	ANSI A21.11 (AWWA C111)
Flanged Joint	ANSI B16.1, B16.2, and A21.10 (AWWA C110)
Flanged Joint (Threaded Flanges)	ANSI B2.1

B. All rubber gasket, push-on, mechanical and flanged joint fittings for ductile iron pipe shall be manufactured in accordance with ANSI A21.10 (AWWA C110).

C. The interior surfaces of ductile iron pipe and fittings shall be lined with a uniform thickness of cement mortar then sealed with an asphaltic coating and/or polyethylene encasement outside coating in accordance with ANSI A21.51 (AWWA C151). The outside surfaces of ductile iron pipe and fittings for general use shall be coated with a asphaltic coating and/or polyethylene encasement in accordance with ANSI A21.10 or ANSI A21.51.

300 mm Vitrified Clay Pipe

A. Vitrified clay pipes (VCP) shall conform to the ASTM Designation: C700 "Standard Specifications for Extra Strength Clay Pipe," except as modified by the plans and these special provisions.

B. Joints for VCP plain-end pipe sewers 300 mm or smaller in diameter may be rubber compression couplings or composition coupling with stainless steel bands Class 316. Rubber compression couplings with Class 316 stainless steel bands shall be in accordance with the requirements of ASTM Designation C425. Composition couplings with Class 316 stainless steel bands shall be in accordance with the requirements of ASTM Designation : C425 "Tentative Specifications for Compression Couplings for Vitrified Clay Plain-End Pipe".

150 mm Cast Iron Pipe

A. Cast iron pipes (CIP) shall conform to the following standards:
   a. ANSI A21.8 (AWWA C101), "Thickness Design of Cast Iron Pipe."
   b. ANSI A21.6 (AWWA C106), "Cast Iron Pipe Centrifugally Cast in Metal Molds for Water or Other Liquids."
   c. ANSI A21.8 (AWWA C108), "Cast Iron Pipe Centrifugally Cast in Sand Lined Molds for Water or Other Liquids."
   d. ANSI A21.11 (AWWA C111), "Rubber Gasket Joints for Cast Iron Pressure Pipe and Fittings."

B. All joint fittings shall be push-on or mechanical.

C. The linings shall be double thickness of cement with bituminous seal coat.

Quality Assurance

A. The manufacturer of each shipment of pipe shall be required to supply a statement certifying that each lot or load of pipe has been manufactured and tested in accordance with these special provisions.

Execution

A. At all times when the work of installing pipe is not in progress, including worker break times, close the ends of the pipe with a tight-fitting, vermin-proof and child-proof, cap or plug. Do not permit trench water to enter the pipe. Do not place tools, clothing, or other materials in the pipe. The Contractor shall maintain the interior of the pipe in a sanitary condition free from foreign materials.

B. Where pipe sections less than the standard 3.96m or 6.10m pipe lengths are required, the pipe sections shall be installed in accordance with the manufacturer's installation guide and shall only be used with the approval of the Engineer. The minimum pipe length permitted is 1.52m when used to connect to manholes and cleanouts. The minimum pipe length permitted for stub outs shall be 900mm.

Pipe Installation

The Contractor shall furnish and install all pipe, specials, fittings, closure pieces, supports, gaskets, jointing materials, and all other appurtenances as shown and as required to provide a complete and workable installation. Pipe installation shall be as recommended in UNI-B-5 except as modified below and as shown on the plans.

A. Inspect each section of pipe prior to lowering the pipe into the trench. Thoroughly clean the ends of the pipe. Remove foreign matter and dirt from inside of the pipe and keep pipe clean during and after installation.

CONTRACT NO. 04-012084
CONTRACT CHANGE ORDER NO 69
SHEET 65 OF 113

B. Install pipe according to the manufacturer's approved order of installation to the proper lines and grades as shown on the plans.

1. Pipe shall be installed with pipe bells up-grade. Lay pipes uphill if the grade exceeds ten percent (10%).

2. Installation tolerances for the pipe shall not vary more than 50mm horizontally or 25mm vertically from the alignment and elevations shown on the plans.

3. Install the pipe such that the identification markings on each pipe section are continuously aligned for the total length of the pipeline alignment. Orient the strip marking upward to the 12 o'clock position (top) of the trench opening.

4. Avoidance of reverse slope: Any pipeline installed with reversed slope, as evidenced by ponding of water or sag, is not allowed. Any such pipeline shall be removed and replaced (at proper line and grade) to the nearest upstream and downstream sewer structure as directed by the Engineer.

C. The pipe shall have firm bearing along its full length, and bell holes shall be provided at each joint to permit visual inspection of the joint and prevent the pipe from being supported by the bell end or coupling.

A. Field cutting and milling shall be accomplished to equal the quality of shop-fabricated ends in accordance with the manufacturer's written instructions.

B. Pipe Assembly: Assemble the pipe joint using the lubricant supplied by the pipe manufacturer. Insert the spigot end into the bell or coupling to the proper insertion mark. Check that the elastomeric ring has not left the groove during assembly by passing a feeler gauge around the completed joint. Drive the spigot end into the bell in accordance with the manufacturer's recommendations. Stabbing shall not be permitted.

F. Horizontal or vertical curve alignments shall be accomplished as required, in accordance with the manufacturer's recommendations. A combination of random pipe lengths, bending, and joint deflection shall be utilized to create smooth radius curves in accordance with the manufacturer's recommendations and as directed by the Engineer.

Connection to Existing Sewer System

A. Connection to the existing sewer system at an existing manhole or dead end shall be made as shown on the plans in accordance with these special provisions.

Contractor Responsibility

It is the Contractor's responsibility to visit the site and ascertain the present site conditions for the entire reach prior to beginning work. Any discrepancies between existing drawings and field conditions shall be brought to the attention of the Engineer immediately.

Traffic Control

The Contractor shall submit a traffic control plan to the agency having jurisdiction for its approval prior to starting the work.

Manholes

Seals around manholes shall be in accordance with the manufactures recommendations.

Storm Water Pollution Prevention Plan (SWPPP) Requirements

The Contractor shall abide by the conditions of the Regional Water Quality Control Board, General Construction Activity Storm Water Permit and the project Storm Water Pollution Prevention Plan (SWPPP).

Examination of Approved Plans, Specifications and Site

The Contractor shall carefully examine the site of the proposed work, the plans, the specifications, and all other pertinent documents. Contractor shall be satisfied as to the character, quality and quantities of work to be furnished, and as to the requirements of the plans and these special provisions. The District will not be liable for any loss sustained by the Contractor as a result of any variance between conditions as shown on the plans and the actual conditions revealed during the progress of the work or otherwise.

Quality of Materials

The work shall be performed in a thorough, worker-like manner in accordance with the plans, and these special provisions. All work shall conform to the lines and grades shown on said plans.

At least one member of the Contractor's workforce who is thoroughly familiar with the specified requirements of work and who is completely trained and experienced in the construction skills necessary for satisfactory completion of the work shall be present at the site, directing the work, at all times.

Adequate number of skilled workers and sufficient and appropriate equipment shall be present at the site prior to commencing daily construction operations.

The Engineer shall inform the Contractor if any person in the employ of the Contractor fails to or refuses to comply with the requirements of these special provisions, or appears to the Engineer to be incompetent or unfit, or to act in a disorderly, improper or unsafe manner. It shall be the Contractor's responsibility to dismiss any such person from the work site or take any other action deemed appropriate by the Contractor.

All equipment, materials, and supplies to be incorporated in the work shall be new. All equipment, material and supplies shall be produced in a good and workmanlike manner.

The Contractor may offer as substitution any material, process, or article substantially equal or better in every respect to that so indicated or specified; provided, however, that if the material, process, or article offered by the Contractor is not, in the opinion of the Engineer, substantially equal or better in every respect to that specified, then the Contractor must furnish the material, process, or article specified or one that in the opinion of the Engineer is substantially equal or better in every respect.

Shop Drawing Procedures -

A. Contractor shall submit six (6) copies of all shop drawings, submittals, and manufacturer's cut sheets detailing the methods and materials intended for use on the project. Submittals shall be consecutively numbered, shall be accompanied by a transmittal letter marked with the number and title of the submittal, name of the project, name and address of the Contractor and supplier, along with contact persons for same, and shall be checked by and marked with the approval of the Contractor. In addition, any submittals that deviate from the requirements of the Contract shall be clearly noted and explained in the transmittal letter.

B. The Engineer will review the submittals so provided, and will return the submittals marked to indicate that submittals are approved or must be returned for revision. The Engineer shall be allowed a minimum of five (5) working days for the review of submittals. Submittals returned for revision must be corrected as noted and the Contractor must re-submit shop drawings as noted above until approved by the Engineer. Review and approval of shop drawings by the Engineer shall not relieve the Contractor of the responsibility for executing the work in accordance with these special provisions, using proper methods of construction, nor from furnishing materials or work required but not indicated on the submittals.

C. Construction shall not begin on relevant portions of the work until shop drawing submittals have been approved by the Engineer. Shop drawings shall be submitted in a timely manner so as not to delay construction of the work.

Materials

All materials shall be new and unused, of the quality defined in these special provisions, and approved by the Engineer. All materials to be used within a specific project and intended for equivalent uses shall be identical as to manufacturer and model number. Materials not identical as to manufacturer and model number to those approved by the Engineer, materials that are damaged, or materials that are otherwise unacceptable to the Engineer shall be rejected and immediately removed from the job site.

Pre-Construction Conference

CONTRACT NO. 04-0120R4
CONTRACT CHANGE ORDER NO 69
SHEET 68 OF 113

A. The Contractor shall schedule a Pre-Construction Conference with the SFPUC's Inspection Department at least five (5) days prior to beginning any water or sewer work in the field. As a minimum, the attendees at this conference shall include:

B. The purpose of this meeting is to review the plans for the project relative to the requirements of these special provisions, and the plans. The Contractor shall be prepared to discuss, in detail, the project schedule, and shall provide the Engineer with any schedules, submittals, lists, permits, or other information required by the Engineer, by these special provisions or by the plans.

Inspection

All work and materials furnished shall be subject to inspection for compliance with these special provisions and all other appropriate specifications.

The SFPUC shall at all times have access to the work wherever it is in preparation or progress and the Contractor shall provide proper facilities for such access and for inspection. The Contractor shall provide adequate safe means by which to inspect the work.

Failure or oversight of any Inspector to condemn defective materials at the time of use, or to condemn improper work at the time it is performed, shall not diminish the Contractor's obligations to meet the requirements of the plans and these special provisions. The Contractor shall remove and replace any faulty materials and work at no additional cost to the Engineer upon discovery of the defects or upon receipt of notice from the Engineer to do so.

Defective work or material may be rejected prior to the date of acceptance of the work notwithstanding that such defective work or material may have been previously inspected. Acceptance shall not constitute approval of latent defects or waiver of maintenance requirements.

Any work covered up or otherwise rendered inaccessible without approval or consent of the Engineer must, if required by SFPUC, be uncovered for examination at the Contractor's expense. Any work done in the absence of the Engineer without written permission shall be subject to rejection.

Environmental Control

The Contractor shall abide by all applicable local, state and federal regulations, and by the conditions of the Regional Water Quality Control Board.

The Contractor shall provide effective measures where necessary to prevent operations from producing dust in an amount damaging to property or causing a nuisance as determined by the Engineer. The Contractor shall be responsible for any damage due to dust originating from its operations.
The Contractor shall anticipate and correct any erosion problem arising from its operations.

CONTRACT NO. 04-012084
CONTRACT CHANGE ORDER NO 69
SHEET 69 OF 113

Public Safety and Traffic Control

A. The Contractor shall at all times conduct operations in a manner causing the minimum obstruction and inconvenience to public traffic. The Contractor shall not interfere with the normal operation of public transit vehicles unless otherwise authorized. Trench excavations shall conform with requirements of Section 5-1.02A, "Trench Excavation Safety Plans", of the Standard Specifications. In excavations where sand and or other non-cohesive material is encountered, placing of the necessary protective systems shall commence before a depth of 1.5 meter is attained. At night, lights shall mark all open work and obstructions. The Contractor shall install and maintain all signs, lights, flares, barricades, traffic plates, railings, runways, stairs, bridges and other equipment necessary to safeguard the public. Safety instructions received from governmental authorities shall be followed, but compliance with such instructions shall not diminish the Contractor's responsibility or liability for accidents to workers or damage or injury to persons or property.

In accordance with generally accepted construction practices, the Contractor shall be solely and completely responsible for conditions of the job site, including safety of all persons and property during performance of the work, and the Contractor shall fully comply with all state, federal, and other laws, rules, regulations, and orders relating to the safety of workers and others.

The right of the Engineer to conduct construction review or observation of the Contractor's performance does not include review or observation of the adequacy of the Contractor's safety measures in, on, or near the construction site.

The Contractor shall take immediate action to correct any condition adversely affecting public safety.

B. The Contractor shall submit a traffic control plan to the Engineer and shall obtain approval prior to starting the work.

Protection of Existing Facilities

A. The Contractor's attention is directed to the provisions in Section 15, "existing Highway Facilities," of the Standard Specifications and these special provisions. Attention is directed to the possible existence of pipe and other underground improvements that may or may not be shown on the plans. Once discovered, the Contractor shall preserve and protect all such improvements whether shown on the plans or not. The Contractor shall provide and install suitable safeguards, and shall be responsible for the care and protection of all existing sewer and water pipe, telephone conduit, gas mains, culverts, or other above-ground or below-ground facilities or structures which may be encountered in or near the area of work. It shall be the responsibility of the Contractor to notify each agency of jurisdiction and utility company and to make arrangements for location of facilities prior to beginning construction. In the event of damage to existing facilities during the progress of the work, such facilities shall be replaced or restored to original condition, as determined by the Engineer, at the Contractor's expense.

B. The Contractor shall be responsible for determining in advance the location, elevation, alignment and pipe type and size of all existing pipelines to which connections are to be made. Potholing to determine location will be allowed only after providing the Engineer with three (3)

CONTRACT NO. 04-012024 CONTRACT CHANGE ORDER NO 69
SHEET 70 OF 113

day's advance notice. The Contractor is required to contact Underground Service Alert (USA) at 1-800-227-2600 or 1-800-422-4133 for mark-out of all utilities in the area of the work.

C. If the Contractor, either before commencing work or during the course of the work, finds any discrepancy between specifications or drawings and the physical conditions at the site of the work, Contractor shall promptly notify the Engineer in writing of such discrepancy.

Protection of Workers in Tench Excavation

Whenever work involves trench excavation, the Contractor shall provide all necessary shoring, bracing, sloping, or other provisions to be made for worker protection from hazard of caving ground during the excavation. If such plan varies from the shoring system standards established by the Construction Safety Orders of the Division of Industrial Safety, a Civil Engineer or Structural Engineer registered in the State of California shall prepare the plans.

Contractor shall comply with the Safety Orders of California, Code of Regulations: Title 8, Section 1539 (Excavation, Trenches, Earthwork).

Work within Confined Spaces

The Contractor shall comply with all Federal and State regulations for confined space entry. Work inside confined spaces as defined by the applicable regulations shall not be undertaken until all the tests and safety provisions of the Code of Federal Regulations 1910.146, and the Safety Orders of the California Code of Regulations Title 8 Article 108 sections 5156 et seq. for confined space entry have been performed and the area is verified as safe to enter.

Construction Equipment

The Contractor shall furnish appropriate construction equipment to perform the work in accordance with the plans and these special provisions. Such equipment shall be in a good state of repair and shall be maintained in such state during the progress of the work. In no case shall the manufacturer's rating or capacity for any equipment be exceeded.

Storage of Materials

All materials for use in the work shall be stored by the Contractor in such manner as to prevent damage from exposure to the elements, admixture of foreign materials, or from any other cause. The Contractor shall be entirely responsible for damage or loss by weather or other causes. The Material Safety Data Sheets (MSDS) for all products to be used in the work shall be kept on-site by the Contractor, and the material manufacturer's recommendations for proper storage of its products shall be strictly followed.

Power for Construction Purposes

Contractor shall make all arrangements for electrical power required during construction.

Housekeeping During Construction and Final Cleanup

A. The Contractor shall provide suitable drainage and shall erect such temporary structures as are necessary to protect the work or materials from damage. The Contractor shall rebuild, repair, restore, and make good all injuries, losses, or damages to any portion of the work or the materials occasioned by any cause before the acceptance of the work by the Engineer and shall bear the expense thereof.

B. The Contractor shall, at all times during the course of the work, maintain work areas and all adjacent properties and public access roads free from accumulations of waste, debris, rubbish or construction materials.

C. The Contractor shall conduct cleaning and disposal operations to comply with local ordinances and anti-pollution laws.

D. Dry materials and rubbish shall be moistened to prevent blowing dust. Loads of excavated materials leaving the site or being imported to the site shall be covered or moistened to prevent blowing dust.

E. Upon completion of the work, and before making application for acceptance of the work, the Contractor shall clean all rights-of-way, roads, borrow pits, and all other grounds occupied by him in connection with the work. All rubbish, excess materials, temporary structures and equipment shall be removed. All parts of the work shall be left in a neat and presentable condition, as determined by the Engineer.

Hazardous Wastes and Unknown Physical Conditions

If conditions listed below are found during construction, or if any other conditions are found during construction that may be detrimental to the SFPUC's facilities being constructed, or to the health and safety of the public, the Contractor shall promptly notify the Engineer.

A. Material that the Contractor or Engineer believes may be hazardous waste, as defined in Section 25117 of the Health and Safety Code, and is thus required to be removed to a Class I, Class II, or Class III disposal site in accordance with the provisions of existing law. If such material is discovered, Contractor shall immediately cease work and shall not disturb the job site except as required to protect public safety.

B. Subsurface or latent physical conditions at the site differing from those indicated.

C. Unknown physical conditions at the site of any unusual nature, different materially from those ordinarily encountered and generally recognized as inherent in work of the character provided in the Contract.

The Contractor shall promptly inform the Engineer of any such conditions found during construction. The Engineer shall investigate the conditions, and if it finds that the conditions do materially differ from those shown or expected, or do involve material that may be hazardous

CONTRACT NO. 04-0120K4
CONTRACT CHANGE ORDER NO 69
SHEET 72 OF 113

waste, Contractor shall cease work in the impacted area. If material that may be hazardous waste is discovered, the Engineer shall insure that the appropriate government agencies are contacted prior to any further work being performed and that a solution is implemented.

Pipe Zone

The pipe zone includes the full width of the trench from 150mm below the bottom of the pipe to 300mm above the top of the pipe and extends into manhole or vault excavations to the point of connection to or penetration of such structure.

Trench Zone

The trench zone includes the portion of the trench from the top of the pipe zone to the bottom of the pavement zone in paved areas, or to the existing surface in unpaved areas, and extends into manhole or vault excavations above the pipe zone.

Pavement Zone

The pavement zone includes the concrete or asphalt concrete pavement and aggregate base section placed over the trench zone and extends into manhole or vault excavations above the trench zone.

Access

The Contractor shall provide continuous, unobstructed access to all driveways, water valves, hydrants, or other property or facilities within or adjacent to the work areas.

Blasting

Blasting for excavation shall not be performed without the written permission of the Engineer. Procedures and methods of blasting shall conform to all Federal, State and local laws and ordinances.

Pipe Jacking

Tunneling or jacking shall not be used unless specified or approved in writing by the Engineer.

Excess Excavated Material

The Contractor shall remove and legally dispose of all excess excavated material and demolition debris.

Materials

The Contractor shall furnish backfill material as specified below. All materials used in and above the pipe zone shall be capable of attaining the required relative density.

Imported Granular Material – Pipe Zone

Imported Granular Material shall be used within the Pipe Zone for installations of all pressure pipe and tubing.

The Imported Granular Material shall be quarry waste (decomposed granite) free from organic matter. Material shall have a sand equivalent value of not less than 30 per ASTM D 2419, a coefficient of uniformity of 3 or greater, and shall conform to the following gradation:

U.S. Standard Sieve Size	Percent Passing By Weight
25mm	100
19mm	90 – 100
4.75mm	50 – 95
600µm	25 – 45
75µm	3 – 15

Native materials may not be used in lieu of Imported Granular Material within the Pipe Zone unless such native materials meet all of the requirements specified above and specific written permission has been obtained from the Engineer.

Crushed Rock – Pipe Zone

Crushed Rock shall be used within the Pipe Zone for installations of all non-pressure pipe. Crushed rock shall be clean crushed stone free of organic matter. Crushed rock shall be certified to contain less than 1% asbestos by weight or volume and shall conform to the following gradation and requirements:

U. S. Standard Sieve Size	Percent Passing By Weight
25mm	100
19mm	90-100
12.5mm	30-60
9.5mm	0-20
4.75mm	0-5
2.36mm	----

CONTRACT NO. 04-012024

CONTRACT CHANGE ORDER NO 69

SHEET 73 OF 113

CONTRACT NO. 24-01284 CONTRACT CHANGE ORDER NO 69
SHEET 74 OF 113

ASTM C 131 Testing Grade		B
Test	Test Method	Requirement
Percentage Wear	ASTM C 131	----
100 Revolutions	----	15 Maximum
500 Revolutions	----	52 Maximum

Imported Granular Material – Trench Zone

Imported Granular Material shall be used within the Trench Zone for installations of all pressure pipe and tubing and all non-pressure pipe.

Imported Granular Material for use within the Trench Zone shall conform in all ways to Imported Granular Material specified for use within the Pipe Zone.

Native materials may not be used in lieu of Imported Granular Material within the Trench Zone unless such native materials meet all of the requirements specified for Imported Granular Material within the Pipe Zone and specific written permission has been obtained from the Engineer.

Sand-Cement Slurry

Sand-cement slurry shall consist of two sacks, 85.3kg (188 pounds) of Portland cement per cubic yard of sand and sufficient moisture for workability. District approval is required for use of sand-cement slurry as a backfill material.

Trench Plugs

Trench plugs consisting of compacted Imported Granular Material or sand-cement slurry shall be installed on piping systems that are backfilled with crushed rock.

Filter Fabric

Filter fabric shall be manufactured from polyester, nylon, or polypropylene. Material shall be of non-woven construction and shall meet the following requirements:

Grab tensile strength (ASTM D 4632): 45.4kg (100 lbs) minimum for a 25mm (1") raveled strip.
Weight (ASTM D 3776): 152.6g/m^2 (4.5 oz./yd^2)
Apparent opening size (ASTM D 4751): 0.150mm (0.006")

Dewatering

A. The Contractor shall provide and maintain at all times during construction ample means

CONTRACT NO. 04-0120R4
CONTRACT CHANGE ORDER NO 69
SHEET 75 OF 113

and devices to promptly remove and dispose of all water from any source entering excavations or other parts of the work. Dewatering shall be performed by methods that will ensure a dry excavation and preservation of the final lines and grades of the bottoms of excavations. Dewatering methods may include well points, sump points, suitable rock or gravel placed as pipe bedding for drainage and pumping, temporary pipelines, or other means, all subject to the approval of the Engineer. The cost of all dewatering activities shall be borne by the Contractor.

B. Sewer systems shall not be used as drains for dewatering trenches or excavations, nor for disposal of collected or accumulated groundwater, without the approval of the agency of jurisdiction.

C. Concrete shall not be poured in water, nor shall water be allowed to rise around concrete or mortar until it has set at least four hours.

D. The Contractor is responsible for meeting all Federal, State, and local laws, rules and regulations regarding the treatment and disposal of water from dewatering operations at the construction site.

Shoring and Shielding

A. The Contractor's design and installation of shoring shall be consistent with the rules, orders, and regulations of CAL-OSHA.

B. Excavations shall be shored, sheeted, and supported such that the walls of the excavation will not slide or settle and all existing improvements of any kind, either on public or private property, will be fully protected from damage.

C. The sheeting and shoring shall be arranged so as not to place any stress on portions of the completed work until the general construction has proceeded far enough to provide ample strength.

D. Care shall be exercised in the moving or removal of trench shields, sheeting, and shoring to prevent the caving or collapse of the excavation faces being supported.

Correction of Overexcavation

Overexcavations shall be corrected by backfilling with approved imported granular material or crushed rock, compacted to 90% relative compaction, as directed by the Engineer.

Foundation Stabilization

A. When unsuitable soil materials are encountered, the unsuitable material shall be removed to the depth determined necessary in the field by the Engineer. The sub-grade shall be restored with compacted Imported Granular Material or crushed rock as recommended by the Engineer. Place the appropriate bedding or base material on this restored foundation.

CONTRACT NO. 04-012024 CONTRACT CHANGE ORDER NO 69
SHEET 76 OF 113

B. When rock encroachment is encountered, the rock shall be removed to a point below the intended trench or excavation sub-grade as determined necessary in the field by the Engineer. The sub-grade shall be restored with compacted Imported Granular Material as recommended by the Engineer. Place the appropriate bedding or base material on this restored foundation.

C. When excessively wet, soft, spongy, or similarly unstable material is encountered at the surface upon which the bedding or base material is to be placed, the unsuitable material shall be removed to the depth determined necessary in the field by the Engineer. Restore the trench with crushed rock enclosed in filter fabric as directed by the Engineer. Larger size rocks, up to 75 mm, with appropriate gradation, may be used if recommended by the Engineer. Place the appropriate bedding or base material on this restored foundation.

Trench Excavation and Placement of Bedding

A. Excavate the trench to the lines and grades shown on the drawings with allowance for 150mm of pipe bedding material.

B. The maximum length of open trench shall be 152m except by permission of the Engineer, City or County. The distance is the collective length at any location, including open excavation and pipe laying, which has not been backfilled to the elevation of the surrounding grade.

C. Trench walls shall be sloped or shored per the requirements of CAL-OSHA.

D. The trench bottom shall be graded to provide a smooth, firm, and stable foundation that is free from rocks and other obstructions.

E. Place the specified thickness of bedding material over the full width of the trench. Grade the top of the pipe base ahead of the pipe laying to provide a firm, uniform support along the full length of pipe.

F. Excavate bell holes at each joint to permit proper assembly and inspection of the entire joint.

G. Trenches for main pipelines and all appurtenances shall be backfilled with the materials and methods as specified for the Pipe Zone, Trench Zone and Pavement Zone.

H. Trench depth shall be as required to install pipelines in accordance with the plans and these special provisions. Unless shown otherwise in the plans, the minimum cover for pipelines shall be as follows:

Pipeline Application	Minimum Cover Required
Potable Water	0.91m
Recycled Water	1.22m
Sewer	1.52m

I. Final street sub-grade shall be established prior to the excavation of pipeline trenches. Minimum cover above pipe shall be 600mm for hydrotesting.

Manhole and Vaults

A. The Contractor shall prepare an excavation large enough to accommodate the structure and permit grouting of openings and backfilling operations. The walls of the excavation shall be sloped or shored per the requirements of CAL-OSHA.

B. Manholes and vaults shall be placed at the location and elevation shown on the plans, on undisturbed soils and 150mm of compacted crushed rock base.

C. Manhole and vault excavations shall be backfilled with the materials and methods as specified for the Pipe Zone, Trench Zone and Pavement Zone.

Compaction Requirements

A. Compaction shall be accomplished by mechanical means. Consolidation by water settling methods such as jetting or flooding is prohibited.

B. If the backfill fails to meet the specified relative compaction requirements; the backfill shall be reworked until the requirements are met. All necessary excavations for density tests shall be made as directed by the Engineer.

C. Compaction tests shall be performed at random depths, and at random intervals not to exceed 45m, as directed by the Engineer.

D. Relative compaction shall be determined by the impact or field compaction test made in accordance with ASTM D 1557 Procedure C.

E. Unless otherwise shown on the drawings or otherwise described in the specifications for the particular type of pipe installed, relative compaction in pipe trenches shall be as follows:

1. Pipe zone - 90% relative compaction.
2. Trench zone - 90% relative compaction.
3. Structural section in paved areas - per agency requirements, 95% minimum.
4. Imported Granular Material for over excavation or foundation stabilization - 90% relative density.

F. All excavations are subject to compaction tests.

Trench Plugs

Trench plugs shall be installed at 60m intervals along the entire length of piping systems. Trench plugs shall be 3m in length and shall encompass the entire pipe zone. Additional trench plugs may be required as directed by the Engineer.

Pipe Zone Backfill

A. Care shall be taken in placing the imported granular backfill material simultaneously around the main pipeline and appurtenance pipes so that the pipe barrel is completely supported and that no voids or uncompacted areas are left beneath the pipe or on the sides of the pipe. Care shall be taken to place material simultaneously on both sides of the pipe to prevent lateral movement. This area shall be mechanically compacted to attain 90% relative density. Care shall be taken when compacting appurtenance laterals 50mm and smaller to prevent the crushing or denting of the copper lateral. Additional lifts of 300mm or less thickness may be required on 400mm or larger diameter pipe to attain complete support of the haunch area. Soils tests may be taken on this layer of backfill.

B. After the spring line backfill has been approved by the Engineer, backfill of the remainder of the Pipe Zone may proceed. Do not drop sharp, heavy pieces of material directly onto the pipe or the tamped material around the pipe.

C. Place and compact the imported granular material at a maximum of 300mm lifts. Compact all material placed in the Pipe Zone by mechanical methods. Sand cone tests shall be taken on this layer of backfill.

D. The use of a backhoe-mounted compaction wheel is prohibited within the pipe zone to 300mm above the top of the pipe.

E. Under no circumstances shall consolidation by water settling or water-setting methods (i.e. jetting, diking, etc.) be permitted.

Trench Zone Backfill

A. After the Pipe Zone material has been placed, compacted, approved by the Engineer, backfill in the Trench Zone may proceed.

B. Compaction using vibratory equipment, tamping rollers, pneumatic tire rollers, or other mechanical tampers shall be performed with the type and size of equipment necessary to accomplish the work. The backfill shall be placed in horizontal layers of such depths as are considered proper for the type of compacting equipment being used in relation to the backfill material being placed. Each layer shall be evenly spread, properly moistened, and compacted to the specified relative density. The Contractor shall repair or replace any pipe, fitting, manhole, or structure damaged by the installation operations as directed by the Engineer.

Pavement and Backfill Restoration

A. After the Trench Zone material has been placed, compacted, approved by the Engineer; backfill in the Pavement Zone may proceed as necessary in accordance with the requirements of the agency having jurisdiction.

CONTRACT NO. 04-012024
CONTRACT CHANGE ORDER NO 69
SHEET 79 OF 113

B. Replace bituminous and concrete pavement, curbs, and sidewalks removed or damaged during construction in accordance with the requirements of the agency having jurisdiction.

Measurement and Payment

DIP, VCP and CIP sewer pipes will be measured by the meter along the centerline of the pipes.

The contract unit price paid per meter for DIP, VCP and CIP sewer pipes shall include full compensation for furnishing all labor, materials, tools, equipment, and incidentals, and for doing all the work involved in installing pipe, complete in place, including structure excavation and structure backfill and connecting new pipe to existing or new facilities as shown on the plans, and as specified in these special provisions, and as directed by the Engineer.

10-1.20 SEWER MANHOLE

This work shall consist of constructing precast concrete manholes complete with cones, frames, covers, gratings, asphalt pavement around the ring, steps, excavating, lagging, backfilling, restoring pavement and other incidental work, necessary or required for a complete, satisfactory installation, in accordance with the details shown on the plans and these special provisions.

Manholes shall be constructed to conform to the improved street surface. In unimproved areas, if the ground surface is below the official grade, the manhole shall be constructed to conform to such official grade unless otherwise indicated on the plans.

Precast Concrete Manholes

This section includes materials, testing, and installation of precast concrete manholes for sewers or for access to below grade water mains and appurtenances.

Reference Standards

The publications listed below form part of this specification to the extent referenced and are referred to in the text by the basic designation only. Reference shall be made to the latest edition of said standards unless otherwise called for.

ASTM A 48	-	Gray Iron Castings
ASTM C 478	-	Precast Reinforced Concrete Manhole Sections
ASTM C 478M	-	Precast Reinforced Concrete Manhole Sections [Metric]
ASTM C 923	-	Resilient Connectors Between Reinforced Concrete Manhole Structures, Pipes and Laterals

Access Manholes for Watermains and Appertunances

A. 1500 mm diameter manholes shall be used, unless otherwise noted on the plans, to access water main appurtenances.

CONTRACT NO. 04-C12024 CONTRACT CHANGE ORDER NO 69
SHEET 80 OF 113

B. A variety of manhole diameters and configurations are utilized on various water main appurtenances and devices.

Sewer Manholes

1500 mm diameter manholes shall be used for sewer applications.

Drop Manholes

1500 mm diameter drop manholes shall be used for sewer applications and constructed only at locations shown on the plans.

Corrosion Protection

A corrosion protection lining and/or coating as described in this specification shall be applied to the interior of manholes for sewer mains 450mm or larger, and to all drop manholes regardless of sewer pipe size.

Damp-Proofing

A damp-proofing material shall be applied to the exterior portions of manholes in accordance with these special provisions and as directed by the Engineer when located at or below the water table or when moisture or seepage is indicated.

Joint Sealing

Joint sealant shall be used to form a continuous watertight seal on the concrete base and between successive precast concrete manhole or vault sections.

Vacuum Testing of Manholes

Vacuum testing of manholes is intended for testing precast concrete manhole sections to demonstrate the integrity of the installed materials and construction procedures.

Manholes

A. Precast concrete manhole components shall be in accordance with ASTM C 478.

B. Manhole components shall be designed for H-20 highway wheel loading and specific site conditions.

C. Manhole bases may be either precast or cast-in-place, as appropriate for the application, with a formed recess shaped to match the first precast shaft section. The manhole base shall extend 250mm below the bottom of the lowest pipe and 150mm above the top of the largest pipe.

D. Manhole shafts shall be fabricated only from precast shaft sections, eccentric cone sections and grade rings.

E. Pipe penetrations for sewer applications shall incorporate a watertight flexible pipe connector or ring-type seal according to the method of manhole construction. Precast manholes shall utilize either an integrally cast embedded pipe connector, or a boot-type connector installed in a circular block out opening in accordance with ASTM C 923. Connections to existing manholes shall utilize a boot-type connector per ASTM C 923 installed in a cored opening. Cast-in-place bases shall incorporate a ring-type seal on the pipe to be embedded in the concrete.

Crushed Rock Base and Backfill Materials

Crushed rock base and backfill materials shall be in conformance with the provisions in "Sewer Pipe" of these special provisions.

Manhole Frames and Covers

A. Manhole frames shall be 900mm in diameter with two concentric covers, made of cast-iron in accordance with ASTM A 48, Class 30. Locking frames and covers may be required as determined by the Engineer.

B. Frames and covers shall be designed for H-20 highway wheel loading.

C. Covers shall have the words "'AGENCY NAME' and 'WATER', 'RECYCLED WATER', or, 'SEWER'" cast into the cover as appropriate to the application. No other lettering will be permitted on the top portion of the cover.

D. Castings shall be smooth, clean, and free from blisters, blowholes, and shrinkage. Mating surfaces of the frame and cover shall be machined to prevent movement of the lid. Frames and covers shall be match marked in sets before shipping to the site.

E. All castings shall be dipped twice in a preparation of asphalt or coal tar and oil applied at a temperature of not less than 143.3 degrees C (290 degrees F) nor more than 154.4 degrees C (310 degrees F) and in such a manner as to form a firm and tenacious coating.

Concrete

Concrete used for manholes and appurtenances shall be in conformance with the provisions in these special provisions.

Joint Sealing Compound

Joint sealing compound shall be a mastic-type material in a flexible rope or rolled form with removable wrapper sized to fit into the key of manhole or vault sections.

Repair Mortar and Epoxy Bonding Agent

CONTRACT NO. 04-012024
CONTRACT CHANGE ORDER NO 69
SHEET 81 OF 113

Repair mortar and an epoxy bonding agent shall be used to repair minor surface damage to precast sections or cast-in-place manhole bases at the discretion of the Engineer. Repair products shall be in conformance with the provisions in these special provisions.

Mortar

Mortar for use on joints between precast sections and for setting manhole cover frames shall be in conformance with the provisions in these special provisions.

Damp-Proofing

Damp-proofing material shall be in conformance with the provisions in these special provisions.

Work within Existing Manholes

Contractor shall comply with all Federal and State regulations for confined space entry. Work inside confined spaces, as defined by the applicable regulations, shall not be undertaken until all the tests and safety provisions of the Code of Federal Regulations 1910.146, and the General Industry Safety Orders of the California Code of Regulations, Title 8, Section 5159, for confined space entry have been performed and the area is verified as safe to enter.

Earthwork

Manhole excavation, foundation stabilization (if necessary), placement of base material, backfill and compaction shall be performed in conformance with the provisions in "Sewer Pipes" of these special provisions.

Manhole Base

A. The invert of precast and cast-in-place bases shall be hand-worked to provide channels conforming in size to the inside diameter of the piping as indicated on the plans. The channels shall vary uniformly in size and shape from inlet to outlet. The concrete base shall be shaped with a wood float and shall receive a hard steel trowel finish before the concrete sets. A template shall be used to accurately form the level surface that will receive the first precast section.

B. During construction of cast-in-place bases, all sewer mains and stub piping shall be in place, including ring-type seals, before concrete placement. Pipe grade and alignment shall be verified immediately upon placement of concrete to assure that the pipelines are in proper position prior to the concrete taking an initial set. The invert elevation and flow line of piping shall be as shown on the plans. The manhole base shall extend 250mm below the bottom of the lowest pipe and 150mm above the top of the largest pipe.

C. Cast-in-place bases shall set a minimum of 24 hours before the manhole construction is continued. In certain critical situations, the setting time may be reduced upon approval of the Engineer.

Installing Manhole Sections

CONTRACT NO. 04-0120R4
CONTRACT CHANGE ORDER NO 69
SHEET 82 OF 113

CONTRACT NO. 04-012024
CONTRACT CHANGE ORDER NO 69
SHEET 83 OF 113

A. The concrete manhole base and successive precast sections will receive a mastic joint sealing compound prior to setting the precast sections in place. Following the vacuum testing as described in this section, the joints will be mortared and tooled to a smooth finish, free of voids. Note that sewer manholes are to be vacuum tested following assembly of the concrete sections, but prior to mortaring the joints, or backfilling.

B. Assemble the precast sections to the elevation required by the location of the manhole as follows:

1. Paved Areas: Top of cover shall be flush with the finished paving surface.

2. Traveled Way: Top of cover shall be flush with the existing surface where it is in a traveled way.

3. Shoulder Areas: Top of cover shall be 25mm above the existing surface where outside the limits of a traveled way. Vaults shall not be placed in roadside ditches without the prior approval of the Engineer.

4. Unpaved easements: Top of cover shall be 150mm above the ground surface. Guard posts around the vault may be required in this area as directed by the Engineer.

D. Secure the manhole frame to the grade ring with mortar.

E. After the frame is securely set the cover shall be installed. All necessary cleaning of foreign materials from the frames and covers shall be accomplished to ensure a satisfactory fit.

F. Where manholes are to be given a protective coating, they shall be free of seepage and surface moisture.

F. Piping installation adjacent to the manhole and connection to the base or shaft sections shall be performed as shown on the plans. Piping installation into flexible pipe connectors shall be in accordance with the manufacturer's recommendations for assembly, lubricants and limits of deflection.

H. In order to prevent accidental use of the new sewer before completion and acceptance, the new inlet to existing tie-in manhole(s) and the outlet of the first new upstream manhole(s) shall be sealed with expandable plugs. The Engineer shall approve the specific location of these plugs. Plugs shall be removed at the time of final inspection or as directed by the Engineer. Removal of all construction debris and water shall be completed prior to removal of plugs.

I. Brick or mortar bulkheads shall be installed by the Contractor at the manhole end of all unused stub channels over 900mm beyond manhole base. The bulkheads are intended to prevent ponding of sewage and debris in the unused channels until such time as the manhole stub is connected and normal sewage flow can occur.

J. New connections to existing manholes, where stubs have not been provided, shall be made by core drilling through the walls or base as directed by the Engineer. Flexible

seals shall be used for the pipe penetration. Apply a protective epoxy coating to the cored concrete and the ends of any reinforcing steel exposed in accordance with these special provisions.

K. A concrete collar shall be cast around manhole frames.

Damp-Proofing

At the discretion of the Engineer, damp-proofing material shall be applied to the exterior surfaces of manholes in accordance with the manufacturer's recommendations and these special provisions. The material shall be applied to all exterior surfaces below a point 300mm above the water table or indications of seepage or moisture as directed by the Engineer.

Vacuum Testing of Manholes

A. Vacuum testing of manholes is required and shall be performed as directed in the presence of the Engineer.

B. Vacuum testing equipment shall be as manufactured by P.A. Glazier, Inc. or equal.

C. Manholes shall be tested after assembly and prior to mortaring the joints or backfilling. In the case of manholes incorporating a PVC liner and polyurethane coating, the testing is to take place prior to mortaring the joints, welding the liner seams between sections, applying the coating, or backfilling.

D. All lift holes shall be plugged with an approved grout prior to testing.

E. All pipes entering the manhole shall be plugged, and bracing installed, to prevent the plug from being drawn into the manhole.

F. The test head shall be placed inside the top of the cone section and the seal inflated in accordance with the manufacturer's recommendations.

G. A vacuum of 254 mm of mercury shall be drawn. The time shall be measured for the vacuum to drop to 229 mm. The manhole shall pass the test if the time taken for the drop is greater than 60 seconds.

H. If the manhole fails the test, necessary repairs shall be made and the test repeated until acceptable results are obtained. The leak(s) shall be located and repaired according to their nature with material-in-kind.

Pull Testing of PVC-Lined Manholes

PVC-lined manholes shall have field-welded joints pull tested. Field welds shall withstand a pull test of at least 45.4 kg per liner cm, applied perpendicularly to the concrete surface for a period of one minute, without evidence of cracks or separations. This test shall be conducted at a temperature of 21.1 degrees C to 26.7 degrees C (70 degrees F to 80 degrees F) inclusive.

CONTRACT NO. 04-012024
CONTRACT CHANGE ORDER NO 69
SHEET 84 OF 113

Holiday Testing of PVC-Lined Manholes

PVC-Lined and Polyurethane-coated surfaces shall be holiday tested with an electrical holiday detector as manufactured by Tinker and Rasor (Model AP-W with power pack) with the instrument set at 20,000 volts and used as directed by the Engineer. All imperfections identified on the PVC lining and polyurethane coating shall be repaired with materials-in-kind and the test shall be repeated until no holidays are evident.

Sewer Leakage and Infiltration Testing

This section describes the requirements and procedures for leakage and infiltration testing of gravity sewer systems.

Requirements Prior to Testing

Trenching for all dry utilities such as electrical, telephone and cable television shall be completed prior to performing any tests on the sewer pipe.

Testing

A. Leakage Test: Each section of sewer pipe between two successive manholes, or between a manhole and its corresponding cleanout or end plug, shall be tested for leakage. The sewer laterals to the property line shall be included in the test.

B. Infiltration Test: In addition to the leakage test, an infiltration test shall be made where groundwater is encountered, or evidence exists that ground water has encroached to the elevation of the sewer, and as directed by the Engineer.

C. All tests shall be made in the presence of the Engineer.

D. Testing may be repeated, as directed by the Engineer, if the subsequent construction operations of the Contractor or others may have damaged or affected the structural integrity of the sewer pipe and/or laterals.

E. All tests must be completed before the street or trench is paved, unless otherwise allowed by the Engineer.

F. Vacuum testing of manholes shall be performed in accordance with these special provisions.

Materials

The Contractor shall furnish all equipment and materials required for testing.

Infiltration Test

CONTRACT NO. 04-0120R4

CONTRACT CHANGE ORDER NO 69

SHEET 85 OF 113

A. Prior to testing for infiltration, the ends of the sewer pipe section to be tested shall be capped or plugged to prevent the entrance of water, and pumping of groundwater shall be discontinued for at least three days.

B. Any infiltration discovered before completion and acceptance of the sewer shall be corrected. The sewer shall be examined and the source of infiltration eliminated. Following repairs or replacement as necessary, including backfill and compaction, the subject line shall be retested to assure no infiltration.

Pressure Tests for Sewer Force Mains

Pressure tests for sewer force mains shall be in accordance with these special provisions except that the allowable leakage shall be zero (0). All leak points shall be located and stopped. All defective pipe, fittings, valves and other appurtenances discovered shall be removed and replaced with sound material and tests repeated until the leakage is zero (0).

Final Acceptance

The requirements of this section shall be considered acceptable when each sewer section's air leakage rate is less than the maximum allowed, the television inspection is satisfactory, and the water infiltration rate is zero.

Measurement and Payment

Sewer manhole will be measured by each.

The contract unit price paid for sewer manhole shall include full compensation for furnishing all labor, materials, tools, equipment, and incidentals, and for doing all the work involved in constructing sewer manhole, complete in place, including all testing, inspection, furnishing and installing manhole frame and cover, as shown on the plans, as specified in these special provisions, and as directed by the Engineer.

CONTRACT NO. 04-012024

CONTRACT CHANGE ORDER NO 69

SHEET 86 OF 113

10-1.21 SLOPE PROTECTION

Slope protection shall be placed or constructed in conformance with the provisions in Section 72, "Slope Protection," of the Standard Specifications.

CONTRACT NO. 04-0120R4

CONTRACT CHANGE ORDER NO 89

SHEET 87 OF 113

10-1.22 MISCELLANEOUS IRON AND STEEL

Miscellaneous iron and steel shall conform to the provisions in Section 75, "Miscellaneous Metal," of the Standard Specifications .

CONTRACT NO. 04-012024

CONTRACT CHANGE ORDER NO 69

SHEET 88 OF 113

10-1.23 CHAIN LINK FENCE

Chain link fence shall be Type CL-1.8 and shall conform to the provisions in Section 80, "Fences," of the Standard Specifications.

CONTRACT NO. 04-0120R4

CONTRACT CHANGE ORDER NO 69

SHEET 89 OF 113

10-1.24 METAL BEAM GUARD RAILING

Metal beam guard railing shall be constructed in conformance with the provisions in Section 83-1, "Railings," of the Standard Specifications and these special provisions.

Line posts shall be wood, steel, or plastic. Blocks shall be wood or plastic.

Metal beam guard railing elements and required backup plates, terminal sections, end caps, and return caps shall conform to the requirements of Type 2 W-Beam as shown in AASHTO Designation: M 180.

CONTRACT NO. 04-012024

CONTRACT CHANGE ORDER NO 69

SHEET 90 OF 113

CONTRACT NO. 04-012024 CONTRACT CHANGE ORDER NO 69
SHEET 91 OF 113

ALTERNATIVE FLARED TERMINAL SYSTEM

Alternative flared terminal system shall be furnished and installed as shown on the plans and in conformance with these special provisions.

The allowable alternatives for a flared terminal system shall consist of one of the following or a Department approved equal.

(1) TERMINAL SYSTEM (TYPE FLEAT) - Terminal system (Type FLEAT) shall be a Flared Energy Absorbing Terminal 350 manufactured by Road Systems, Inc., located in Big Spring, Texas, and shall include items detailed for terminal system (Type FLEAT) shown on the plans. The Flared Energy Absorbing Terminal 350 can be obtained from the distributor, Universal Industrial Sales, P.O. Box 699, Pleasant Grove, UT 84062, Telephone (801) 785–0505 or from the distributor, Gregory Highway Products, 4100 13th Street, S.W., Canton, OH 44708, Telephone (330) 477–4800.

(2) TERMINAL SYSTEM (TYPE SRT) - Terminal system (Type SRT) shall be an SRT-350 Slotted Rail Terminal (8-post system) as manufactured by Trinity Industries, Inc., and shall include items detailed for terminal system (Type SRT) shown on the plans. The SRT-350 Slotted Rail Terminal (8-post system) can be obtained from the manufacturer, Trinity Industries, Inc., P.O. Box 99, 950 West 400S, Centerville, UT 84014, Telephone (800) 772–7976.

The Contractor shall provide the Engineer with a Certificate of Compliance from the manufacturer in conformance with the provisions in Section 6-1.07, "Certificates of Compliance," of the Standard Specifications. The Certificate of Compliance shall certify that the terminal systems furnished conform to the contract plans and specifications, conform to the prequalified design and material requirements, and were manufactured in conformance with the approved quality control program.

Terminal systems shall be installed in conformance with the manufacturer's installation instructions and these requirements. Each terminal system installed shall be identified by painting the type of terminal system in neat black letters and figures 60 mm high on the backside of the rail element between system posts numbers 4 and 5.

For terminal system (Type SRT), the steel foundation tubes with soil plates attached shall be, at the Contractor's option, either driven, with or without pilot holes, or placed in drilled holes. Space around the steel foundation tubes shall be backfilled with selected earth, free of rock, placed in layers approximately 100 mm thick and each layer shall be moistened and thoroughly compacted. The wood terminal posts shall be inserted into the steel foundation tubes by hand and shall not be driven. Before the wood terminal posts are inserted, the inside surfaces of the steel foundation tubes to receive the wood posts shall be coated with a grease which will not melt or run at a temperature of 65°C or less. The edges of the wood terminal posts may be slightly rounded to facilitate insertion of the post into the steel foundation tubes.

For terminal system (Type FLEAT), the soil tubes shall be, at the Contractor's option, driven with or without pilot holes, or placed in drilled holes. Space around the steel foundation tubes shall be backfilled with selected earth, free of rock, placed in layers approximately 100 mm thick and each layer shall be moistened and thoroughly compacted. Wood posts shall be inserted into the steel foundation tubes by hand. Before the wood terminal posts are inserted, the inside surfaces of the steel foundation tubes to receive the wood posts shall be coated with a grease which will not melt or run at a temperature of 65°C or less. The edges of the wood posts may be slightly rounded to facilitate insertion of the post into the steel foundation tubes.

Surplus excavated material remaining after the terminal system has been installed shall be disposed of in a uniform manner along the adjacent roadway where designated by the Engineer.

The contract unit price paid for alternative flared terminal system shall include full compensation for furnishing all labor, materials, tools, equipment, and incidentals, and for doing all the work involved in furnishing and installing alternative flared terminal system, complete in place, including excavation, backfill and disposal of surplus material, as shown on the plans, as specified in the Standard Specifications and these special provisions, and as directed by the Engineer.

CONTRACT NO. 04-0120R4

CONTRACT CHANGE ORDER NO 69

SHEET 92 OF 113

SECTION 10-2. (BLANK)

SECTION 10-3. SIGNALS, LIGHTING AND ELECTRICAL SYSTEMS

10-3.01 DESCRIPTION

Lighting shall conform to the provisions in Section 86, "Signals, Lighting and Electrical Systems," of the Standard Specifications and these special provisions.

CONTRACT NO. 04-0120R4

CONTRACT CHANGE ORDER NO 69

SHEET 93 OF 113

10-3.02 STANDARDS, STEEL PEDESTALS, AND POSTS

Standards, steel pedestals, and posts for lighting standards shall conform to the provisions in Section 86-2.04, "Standards, Steel Pedestals and Posts," of the Standard Specifications, "Steel Structures" of these special provisions, and the following requirements.

Steel bolts not designated on the plans as high-strength (HS) or stainless steel shall be for general applications and shall conform to the requirements in ASTM Designation: A 307.

Handhole reinforcement rings for standards, steel pedestals, and posts shall be continuous around the handholes.

CONTRACT NO. 04-012084

CONTRACT CHANGE ORDER NO 69

SHEET 94 OF 113

10-3.03 CONDUIT

Conduit to be installed underground shall be Type 3 unless otherwise specified. Detector termination conduits shall be Type 3.

Conduit sizes shown on the plans and specified in the Standard Specifications and these special provisions are referenced to metallic type conduit. When rigid non-metallic conduit is required or allowed, the nominal equivalent industry size shall be used as shown in the following table:

Size Designation for Metallic Type Conduit	Equivalent Size for Rigid Non-metallic Conduit
21	20
27	25
41	40
53	50
63	65
78	75
103	100

When Type 3 conduit is placed in a trench (not in pavement or under portland cement concrete sidewalk), after the bedding material is placed and the conduit is installed, the trench shall be backfilled with commercial quality concrete, containing not less than 250 kg of portland cement per cubic meter, to not less than 100 mm above the conduit before additional backfill material is placed.

After conductors have been installed, the ends of conduits terminating in pull boxes, service equipment enclosures, and controller cabinets shall be sealed with an approved type of sealing compound.

.

At other locations where conduit is required to be installed under pavement and if a delay to vehicles will not exceed 5 minutes, conduit may be installed by the "Trenching in Pavement Method."

CONTRACT NO. 04-0120R4

CONTRACT CHANGE ORDER NO 69

SHEET 95 OF 113

10-3.04 CONDUCTORS AND WIRING

Splices of conductors shall be insulated with heat-shrink tubing of the appropriate size after thoroughly painting the spliced conductors with electrical insulating coating.

Heat-shrink tubing shall be heated as recommended by the manufacturer.

The minimum insulation thickness, at any point, for Type USE, RHH or RHW wire shall be 1.0 mm for conductor sizes No. 14 to No. 10, inclusive, and 1.3 mm for No. 8 to No. 2, inclusive. The minimum insulation thickness, at any point, for Type THW and TW wires shall be 0.69 mm for conductor sizes No. 14 to No. 10, inclusive, 1.02 mm for No. 8, and 1.37 mm for No. 6 to No. 2, inclusive.

CONTRACT NO. 04-0120R4

CONTRACT CHANGE ORDER NO 69

SHEET 96 OF 113

10-3.05 BONDING AND GROUNDING

Bonding and grounding shall conform to the provisions in Section 86-2.10, "Bonding and Grounding," of the Standard Specifications and these special provisions.

Bonding jumpers in standards with handholes and traffic pull box lid covers shall be attached by a UL listed lug using 4.5-mm diameter or larger brass or bronze bolts and shall run to the conduit or bonding wire in the adjacent pull box. The grounding jumper shall be visible after the standard has been installed and the mortar pad and cap have been placed on the foundation.

Standards without handholes shall have bonding accomplished by jumpers attached to UL listed ground clamps on each anchor bolt.

For slip base standards or slip base inserts, bonding shall be accomplished by jumpers attached to UL listed ground clamps on each anchor bolt, or a UL listed lug attached to the bottom slip base plate with a 4.5-mm diameter or larger brass or bronze bolt.

Equipment bonding and grounding conductors are required in conduits, except when the conduits contain combinations of loop lead-in cable, fiber optic cable, or signal interconnect cable. A No. 8 minimum, bare copper wire shall run continuously in circuits, except for series lighting circuits, where No. 6 bare copper wire shall run continuously. The bonding wire size shall be increased to match the circuit breaker size in conformance with the Code, or shall be as shown on the plans. Conduits to be installed for future conductors, may omit the copper wire.

Bonding of metallic conduits in metal pull boxes shall be by means of bonding bushings and bonding jumpers connected to the bonding wire running in the conduit system.

CONTRACT NO. 04-012024

CONTRACT CHANGE ORDER NO 69

SHEET 97 OF 113

10-3.06 SERVICE

Continuous welding of exterior seams in service equipment enclosures is not required.

Type III service equipment enclosures shall be the aluminum type.

Circuit breakers shall be the cable-in/cable-out type, mounted on non-energized clips. All circuit breakers shall be mounted vertically with the up position of the handle being the "ON" position.

Each service shall be provided with up to 2 main circuit breakers which shall disconnect ungrounded service entrance conductors. Where the "Main" circuit breaker consists of 2 circuit breakers as shown on the plans or required in the special provisions, each of the circuit breakers shall have a minimum interrupting capacity of 10 000 A, rms.

CONTRACT NO. 04-0120R4

CONTRACT CHANGE ORDER NO _____

SHEET 98 OF 113

10-3.07 PAYMENT

The contract lump sum price or prices paid for lighting shall include highway lighting .

Other roadway lighting on the project shall be considered as included in the contract lump sum price paid for lighting .

Full compensation for hauling and stockpiling electrical materials shall be considered as included in the contract price paid for the item requiring the material to be salvaged and no additional compensation will be allowed therefor.

CONTRACT NO. 04-012084

CONTRACT CHANGE ORDER NO 69

SHEET 99 OF 113

SECTION 11. (BLANK)

CONTRACT NO. 04-012OR4

CONTRACT CHANGE ORDER NO 69

SHEET 100 OF 113

Standard Plans List

The Standard Plan sheets applicable to this contract include, but are not limited to those indicated below. Applicable Revised Standard Plans (RSP) and New Standard Plans (NSP) indicated below are included in the project plans as individual Standard Plan sheets.

	GENERAL ROAD WORK (Miscellaneous)
A10A	**Acronyms and Abbreviations (A-L)**
A10B	**Acronyms and Abbreviations (M-Z)**
A10C	**Symbols (Sheet 1 of 2)**
A10D	**Symbols (Sheet 2 of 2)**
A62A	**Excavation and Backfill – Miscellaneous Details**
A77A1	**Metal Beam Guard Railing – Standard Railing Section (Wood Post With Wood Block)**
A77B1	**Metal Beam Guard Railing – Standard Hardware**
A77C1	**Metal Beam Guard Railing – Wood Post and Wood Block Details**
A77C4	**Metal Beam Guard Railing – Typical Railing Delineation and Dike Positioning Details**
A77E2	**Metal Beam Guard Railing – Typical Layouts for Embankments**
A77L1	**Metal Beam Railing Terminal System (Type SRT)**
A85	**Chain Link Fence**
A87B	**Asphalt Concrete Dikes**
	GENERAL ROAD WORK (Temporary Facilities)
T58	**Temporary Water Pollution Control Details (Temporary Construction Entrance)**
	SIGNALS, LIGHTING AND ELECTRICAL SYSTEMS
ES-1A	**Electrical Systems (Symbols And Abbreviations)**
ES-1B	**Electrical Systems (Symbols And Abbreviations)**
ES-1C	**Electrical Systems (Symbols And Abbreviations)**
ES-2A	**Electrical Systems (Service Equipment)**
ES-2C	**Electrical Systems (Service Equipment Notes, Type III Series)**
ES-2E	**Electrical Systems (Service Equipment and Typical Wiring Diagram, Type III – B Series)**
ES-3A	**Electrical Systems (Controller Cabinet Details)**
ES-3C	**Electrical Systems (Controller Cabinet Details)**
ES-6A	**Electrical Systems (Lighting Standards Types 15 and 21)**
RSP ES-6E	**Electrical Systems (Lighting Standards Type 30 and 31)**
ES-6F	**Electrical Systems (Lighting Standards Type 30 and 31, Base Plate Details)**

Contract No. 04-0120R4

04-SF-80 (KP 12.6/13.2)

CONTRACT PLAN
for
CONTRACT CHANGE ORDER No. 69

Date 05-18-07

CONTRACT NO. 04-0120R4

CONTRACT CHANGE ORDER NO 69

SHEET 102 OF 113

INDEX OF SHEETS

SHEET No.	DESCRIPTION
1	Layout
2-3	Construction Details
4-5	Sanitary Sewer Plans
6	Summary of Quantities
7-10	Electrical Plans
STRUCTURAL PLANS	
11	South-South Detour - TIS 041 Pump Station

DIST	COUNTY	ROUTE	KILOMETER POST TOTAL PROJECT	SHEET No	TOTAL SHEETS
04	SF	80	12.6/13.2	1	11

REGISTERED CIVIL ENGINEER 05/18/07

PLANS APPROVAL DATE

REGISTERED PROFESSIONAL ENGINEER
Johnny C. Kuo
No. C 60036
Exp. 06/30/08
CIVIL
STATE OF CALIFORNIA

The State of California or its officers or agents shall not be responsible for the accuracy or completeness of electronic copies of this plan sheet.

Caltrans now has a web site! To get to the web site, go to: http://www.dot.ca.gov

PB AMERICAS, INC.
303 Second St., Suite 700N
San Francisco, CA 94107-1317

Caltrans Metric

"W" LINE +20 54 +40 +60 +80

"E" LINE +20 54 +40 +60 +80

Exist USCG ROAD

YERBA BUENA ISLAND

Exist SEWER PUMP STATION

SANITARY SEWER LIFT STATION MANHOLE, SEE SHEET C-1 FOR DETAILS

CHAIN LINK FENCE

Exist SOUTH-SOUTH DETOUR FOOTING

SANITARY SEWER LIFT STATION COMMUNICATIONS & POWER CABINETS

BCDC JURISDICTION LINE

"TR" LINE

Exist CONSTRUCTION ROAD

CONFORM TO Exist GRADE

INTERIM SEWER PUMP STATION ACCESS ROAD

SHORE LINE

SAN FRANCISCO BAY

NOTE

1. FOR ADDITIONAL DETAIL SEE SHEETS C-1, SS-1 AND SSP-1.

ABBREVIATION

BCDC - BAY CONSERVATION AND DEVELOPMENT COMMISSION

04-0120R4
CONTRACT CHANGE ORDER NO. 69
SHEET 103 OF 113

LAYOUT
SCALE: 1:200

L-1

DESIGN OVERSIGHT	CALCULATED/ DESIGNED BY	DATE	REVISED BY	DATE REVISED
HONG WONG	CHECKED BY			

STATE OF CALIFORNIA - DEPARTMENT OF TRANSPORTATION
Caltrans

RELATIVE BORDER SCALE IS IN MILLIMETERS 0 20 40 60 80

DGN FILE => $REQUEST
USERNAME => $USER

CU 04251

EA 0120R1

LAST REVISION 00-00-00
DATE PLOTTED => $DATE
TIME PLOTTED => $TIME

CURVE DATA						
No.	R	Δ	T	L	N	E
①	5.00	77°57'14"	4.05	6.80	647357.278	1836164.923
②	2.00	94°38'43"	2.17	3.30	647353.757	1836152.596
③	6.20	63°45'46"	3.86	6.90	647356.699	1836149.599

NOTE

INTERIM ACCESS ROAD GRADES TO BE FIELD VERIFIED AND ADJUSTED AS NECESSARY.

DIST	COUNTY	ROUTE	KILOMETER POST TOTAL PROJECT	SHEET No	TOTAL SHEETS
04	SF	80	12.6/13.2	2	11

05/18/07
REGISTERED CIVIL ENGINEER

PLANS APPROVAL DATE

REGISTERED PROFESSIONAL ENGINEER
Johnny C. Kuo
No. C 60036
Exp. 06/30/08
CIVIL
STATE OF CALIFORNIA

The State of California or its officers or agents shall not be responsible for the accuracy or completeness of electronic copies of this plan sheet.

Caltrans now has a web site! To get to the web site, go to: http://www.dot.ca.gov

PB AMERICAS, INC.
303 Second St., Suite 700N
San Francisco, CA 94107-1317

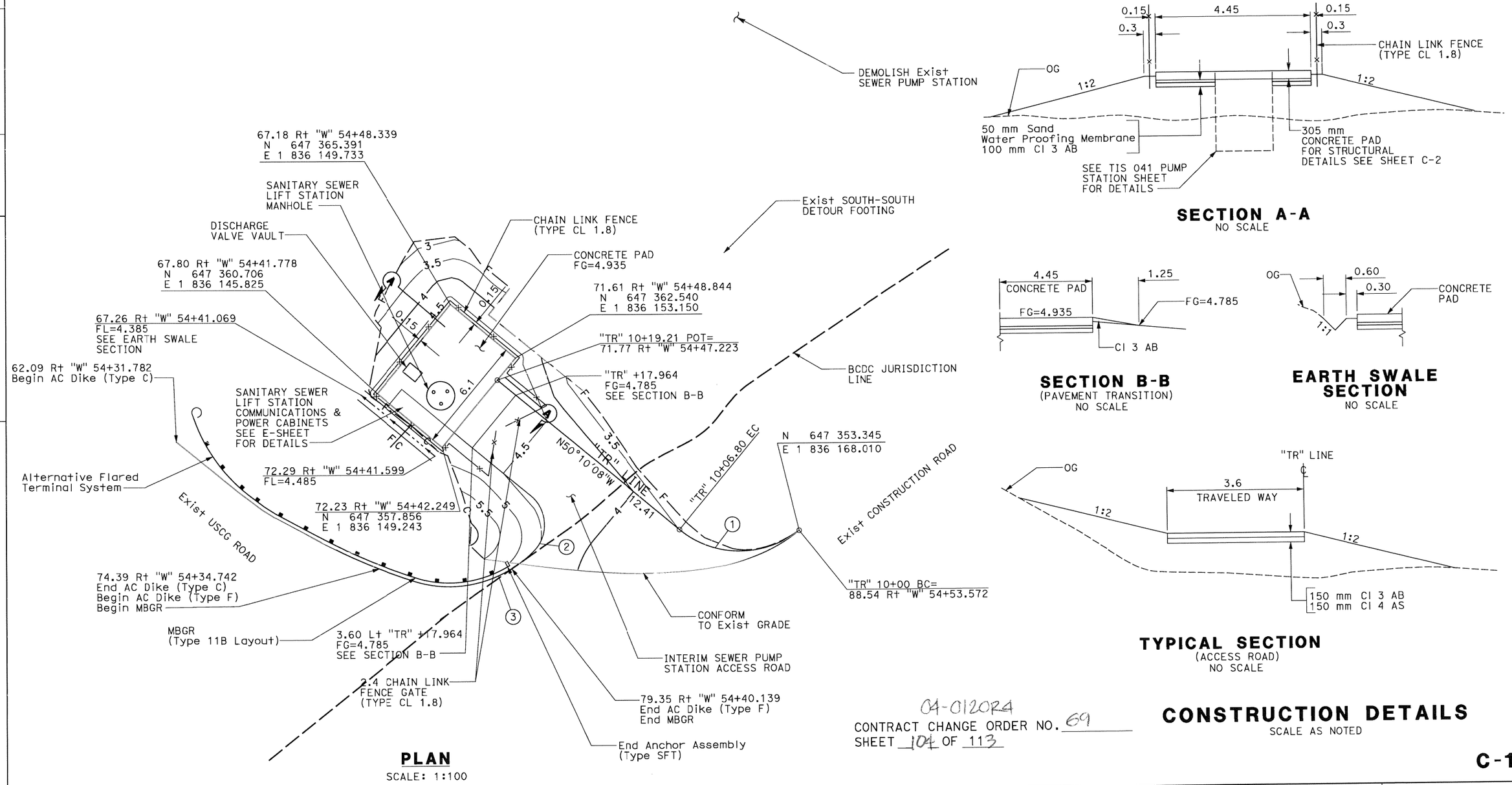

PLAN
SCALE: 1:100

SECTION A-A
NO SCALE

SECTION B-B
(PAVEMENT TRANSITION)
NO SCALE

EARTH SWALE SECTION
NO SCALE

TYPICAL SECTION
(ACCESS ROAD)
NO SCALE

04-0120R4
CONTRACT CHANGE ORDER NO. 69
SHEET 104 OF 113

CONSTRUCTION DETAILS
SCALE AS NOTED

C-1

DESIGN OVERSIGHT: HONG WONG
CALCULATED/DESIGNED BY
CHECKED BY
DETAILED BY
DATE REVISED
REVISED BY
DATE

STATE OF CALIFORNIA - DEPARTMENT OF TRANSPORTATION
Caltrans

LAST REVISION 00-00-00
DATE PLOTTED => $DATE
TIME PLOTTED => $TIME

RELATIVE BORDER SCALE IS IN MILLIMETERS 0 20 40 60 80
DGN FILE => $REQUEST
USERNAME => $USER
CU 04251
EA 0120R1

DIST	COUNTY	ROUTE	KILOMETER POST TOTAL PROJECT	SHEET No	TOTAL SHEETS
04	SF	80	12.6/13.2	3	11

REGISTERED CIVIL ENGINEER 05/18/07

PLANS APPROVAL DATE

REGISTERED PROFESSIONAL ENGINEER — Wee Shing Owyang — No. 24960 — Exp. 12/31/07 — CIVIL — STATE OF CALIFORNIA

The State of California or its officers or agents shall not be responsible for the accuracy or completeness of electronic copies of this plan sheet.

Caltrans now has a web site! To get to the web site, go to: http://www.dot.ca.gov

PB AMERICAS, INC.
303 Second St., Suite 700N
San Francisco, CA 94107-1317

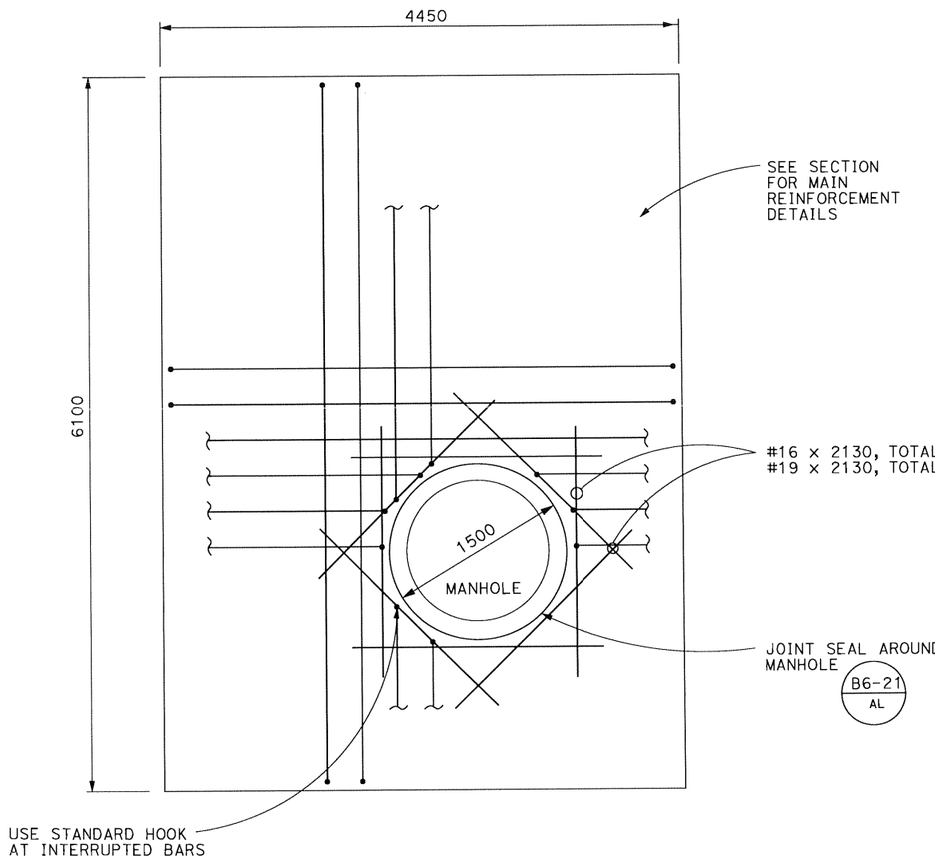

CONCRETE PAD PLAN VIEW

NO SCALE

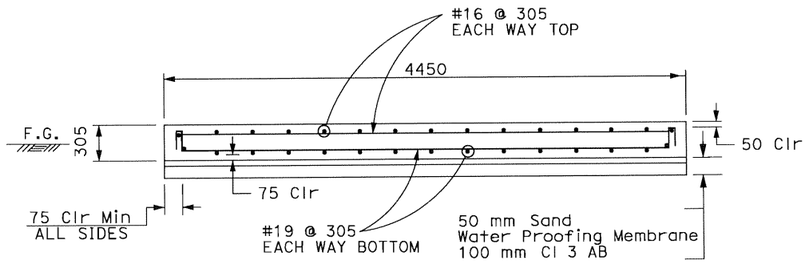

CONCRETE PAD SECTION VIEW

NO SCALE

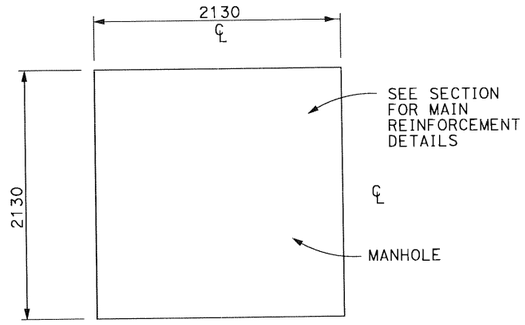

MANHOLE FOUNDATION SLAB PLAN VIEW

NO SCALE

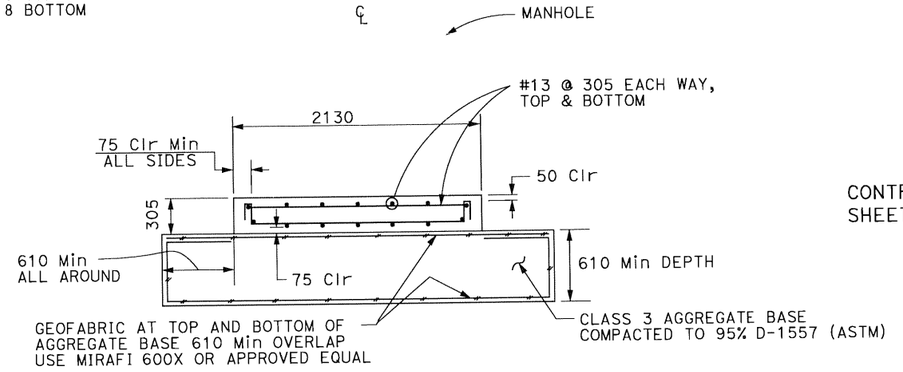

MANHOLE FOUNDATION SLAB SECTION VIEW

NO SCALE

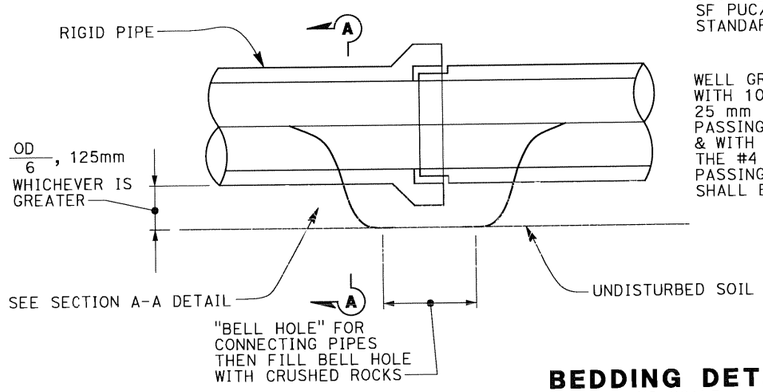

BEDDING DETAIL

NO SCALE

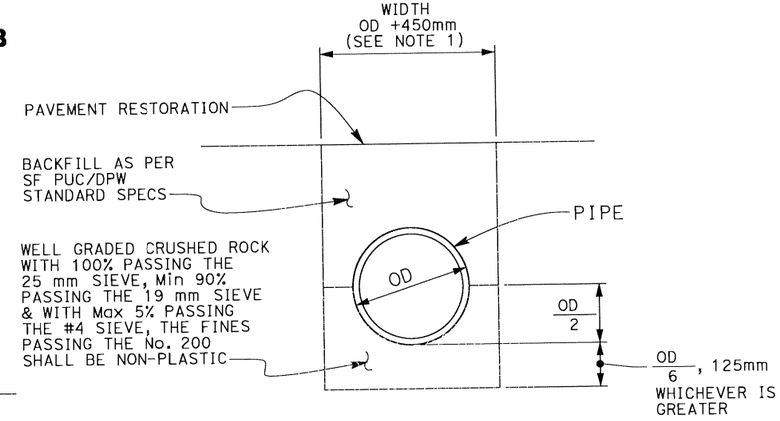

SECTION A-A

NOTES:

1. MAXIMUM TRENCH WIDTH SHALL BE LARGER OUTSIDE DIMENSION OF THE NEW OR EXISTING SEWER/STRUCTURE PLUS 900 mm.
2. ALL NEW SEWERS SHALL BE CONSTRUCTED ON CRUSHED ROCK BEDDING AS SHOWN ON BEDDING DETAIL UNLESS OTHERWISE NOTED.

04-0120R4

CONTRACT CHANGE ORDER NO. 69

SHEET 105 OF 113

CONSTRUCTION DETAILS

SCALE AS NOTED

C-2

ALL DIMENSIONS ARE IN MILLIMETERS UNLESS OTHERWISE NOTED

DATE	REVISED BY	DATE REVISED

CALCULATED/DESIGNED BY

CHECKED BY

DESIGN OVERSIGHT

HONG WONG

STATE OF CALIFORNIA - DEPARTMENT OF TRANSPORTATION

Caltrans

LAST REVISION 00-00-00

DATE PLOTTED => $DATE

TIME PLOTTED => $TIME

RELATIVE BORDER SCALE IS IN MILLIMETERS 0 20 40 60 80

DGN FILE => $REQUEST

USERNAME => $USER

CU 04251

EA 0120R1

DIST	COUNTY	ROUTE	KILOMETER POST TOTAL PROJECT	SHEET No	TOTAL SHEETS
04	SF	80	12.6/13.2	4	11

REGISTERED CIVIL ENGINEER — 05/18/07

PLANS APPROVAL DATE

REGISTERED PROFESSIONAL ENGINEER — Johnny C. Kuo — No. C 60036 — Exp. 06/30/08 — CIVIL — STATE OF CALIFORNIA

The State of California or its officers or agents shall not be responsible for the accuracy or completeness of electronic copies of this plan sheet.

Caltrans now has a web site! To get to the web site, go to: http://www.dot.ca.gov

PB AMERICAS, INC.
303 Second St., Suite 700N
San Francisco, CA 94107-1317

DESIGN OVERSIGHT: HONG WONG
CALCULATED/DESIGNED BY:
CHECKED BY:
DATE REVISED BY:
DATE REVISED:

STATE OF CALIFORNIA - DEPARTMENT OF TRANSPORTATION
Caltrans

N 647 381.746
E 1 836 105.558
22° HORIZ BEND

CONNECT TO Exist SANITARY SEWER LINE

"E" LINE

+40

+20

150 mm DIP SEWER PIPE FORCE MAIN (cc)

300 mm VCP

N 647 363.665
E 1 836 122.428
45° HORIZ BEND

3

N 647 365.054
E 1 836 143.827
45° HORIZ BEND

(cc) 150 mm DIP SEWER PIPE FORCE MAIN

2

N 647 357.786
E 1 836 142.010
22.5° HORIZ BEND

(aa) 300 mm VCP

(bb) REMOVE SANITARY SEWER PIPE

(b) 150 mm CIP

TR 10+14.33
9.001 Lt
22.5° HORIZ BEND

Exist USCG ROAD

(dd) REMOVE SANITARY SEWER PIPE

REMOVE WATER PIPE

DISCHARGE VALVE VAULT

25 mm WATER PIPE

N 647 358.821
E 1 836 144.969
22.5° HORIZ BEND

1

300 mm VCP

150 mm CIP

NEW SSMH TG=4.785 (c)

NEW SEWER LIFT STATION

Exist SSMH TO BE REMOVE TG=4.685 (a)

"TR" LINE

300 mm abd VCP

REMOVE SANITARY SEWER PIPE (e)

DEMOLISH Exist SEWER PUMP STATION (d)

Exist SOUTH-SOUTH DETOUR FOOTING

BCDC JURISDICTION LINE

Exist CONSTRUCTION ROAD

NOTE

1. ALL EXISTING SANITARY SEWERS ARE CLAY PIPE, UNLESS OTHERWISE NOTED.

ABBREVIATION

SSMH SANITARY SEWER MANHOLE

LEGEND

X — SANITARY SEWER SYSTEM

(xx) — SANITARY SEWER UNIT

//// — REMOVE SEWER PIPE

04-0120R4
CONTRACT CHANGE ORDER NO. 69
SHEET 106 OF 113

SANITARY SEWER PLAN

SCALE: 1:100

SS-1

LAST REVISION 00-00-00 | DATE PLOTTED => $DATE | TIME PLOTTED => $TIME

RELATIVE BORDER SCALE IS IN MILLIMETERS 0 20 40 60 80

DGN FILE => $REQUEST
USERNAME => $USER

CU 04251 | EA 0120R1

DIST	COUNTY	ROUTE	KILOMETER POST TOTAL PROJECT	SHEET No	TOTAL SHEETS
04	Ala	80	12.6/13.2	5	11

05/18/07
REGISTERED CIVIL ENGINEER

PLANS APPROVAL DATE

REGISTERED PROFESSIONAL ENGINEER
Johnny C. Kuo
No. C 60036
Exp. 06/30/08
CIVIL
STATE OF CALIFORNIA

The State of California or its officers or agents shall not be responsible for the accuracy or completeness of electronic copies of this plan sheet.

Caltrans now has a web site! To get to the web site, go to: http://www.dot.ca.gov

PB AMERICAS, INC.
303 Second St., Suite 700N
San Francisco, CA 94107-1317

DATE	REVISED BY	DATE REVISED
		6
		5
		4
		3
		2
		1

CALCULATED/ DESIGNED BY	CHECKED BY
	7
	6
	5
	4
	3
	2
	1

DESIGN OVERSIGHT — HONG WONG

STATE OF CALIFORNIA - DEPARTMENT OF TRANSPORTATION
Caltrans

Station	
m^3	Exc
	Emb

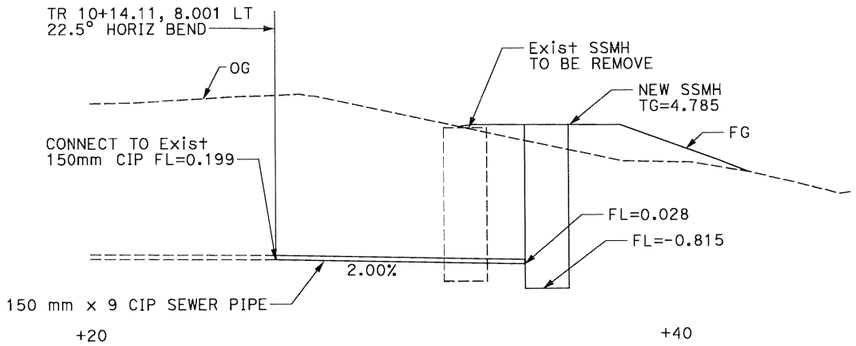

SANITARY SEWER SYSTEM No. 1
PROFILE
SCALE: 1:100 Horiz
1:100 Vert

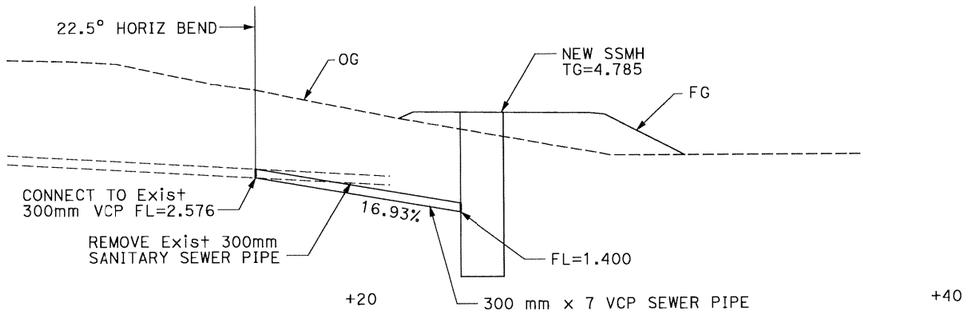

SANITARY SEWER SYSTEM No. 2
PROFILE
SCALE: 1:100 Horiz
1:100 Vert

04-0120R4
CONTRACT CHANGE ORDER NO. 69
SHEET 107 OF 113

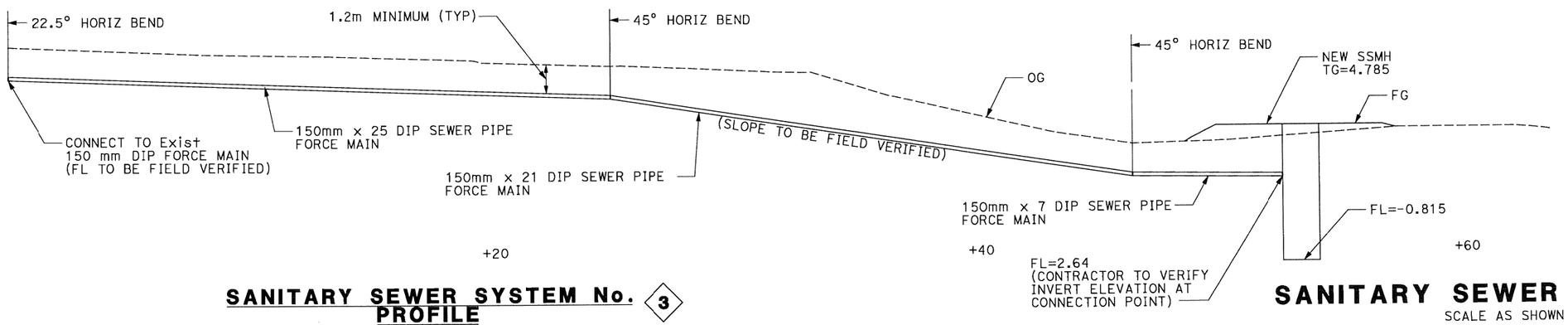

SANITARY SEWER SYSTEM No. 3
PROFILE
SCALE: 1:100 Horiz
1:100 Vert

SANITARY SEWER PROFILE
SCALE AS SHOWN

SSP-1

LAST REVISION 00-00-00
DATE PLOTTED => 5/18/2007
TIME PLOTTED => @TIME

RELATIVE BORDER SCALE IS IN MILLIMETERS
0 20 40 60 80

DGN FILE => T:\13103\MS\SS_detour\Sewer Lift Station\sheet files\Jb01.dgn
USERNAME => @USER

CU 04251

EA 0120R1

DIST	COUNTY	ROUTE	KILOMETER POST TOTAL PROJECT	SHEET NO	TOTAL SHEETS
04	SF	80	12.6/13.2	6	11

REGISTERED CIVIL ENGINEER 05/18/07

PLANS APPROVAL DATE

REGISTERED PROFESSIONAL ENGINEER — Johnny C. Kuo — No. C 60036 — Exp. 06/30/08 — CIVIL — STATE OF CALIFORNIA

The State of California or its officers or agents shall not be responsible for the accuracy or completeness of electronic copies of this plan sheet.

Caltrans now has a web site! To get to the web site, go to: http://www.dot.ca.gov

PB AMERICAS, INC.
303 Second St., Suite 700N
San Francisco, CA 94107-1317

SANITARY SEWER QUANTITIES

SANITARY SEWER PLAN SHEET NO.	SYSTEM NO. ◇	UNIT NO. ○	300mm SANITARY SEWER VCP	150mm DIP FORCE MAIN	150mm CIP SANITARY SEWER PIPE	REMOVE SANITARY SEWER PIPE	SANITARY SEWER MANHOLE	REMOVE Exist SSMH	DEMOLISH SANITARY SEWER PUMP STATION	DESCRIPTION	STATION/OFFSET (FOR MANHOLES ONLY)	SYSTEM NO. ◇	UNIT NO. ○
			M	M	M	M	EA	EA	EA				
SS-1	1	a						1		Remove SSMH	Exist SSMH	1	a
		e				7				Remove 150 mm CIP			e
		b			9					150 mm CIP Sewer Pipe	TR 10+14.33 TO SSMH		b
		c					1			New SSMH	New SSMH		c
		d							1	Demolish Exist Sewer Pump Station	Exist Sewer Pump Station		d
SS-1	2	aa	7							300 mm VCP Sewer Pipe		2	aa
		bb				10				Remove 300 mm Sanitary Sewer			bb
SS-1	3	cc		53						150 mm DIP Force Main		3	cc
		dd				93				Remove 150 mm Force main & 200mm VCP			dd
	TOTAL		7	53	9	110	1	1	1				

(N): Not a seperate pay item, For Information Only

WATER LINE

LOCATION	25mm Water Pipe	Remove 25mm Water Pipe
	m	m
Sewer Lift Station	4	37
TOTAL	4	37

METAL BEAM GUARD RAILING

LOCATION	Alternative Flared Terminal System	End Anchor Assembly (Type SFT)	Metal Beam Guard Railing (Type 11B Layout)
	EA	EA	m
Sewer Lift Station	1	1	11
TOTAL	1	1	11

STRUCTURE EXCAVATION

LOCATIONS	DEPTH OF EXCAVATION	VOLUME OF EXCAVATION
	m	m3
Sewer Manhole	5	9
Total	5	9

PLACE AC DIKE

LOCATION	Place Asphalt Concrete Dike (Type C)	Place Asphalt Concrete Dike (Type F)
	m	m
Sewer Lift Station	12	11
TOTAL	12	11

ROADWAY QUANTITIES

LOCATION	ASPHALT CONCRETE (TYPE A)	CLASS 3 AGGREGATE BASE	CLASS 4 AGGREGATE SUBBASE	50 mm SAND	ROADWAY EXCAVATION	EMBANKMENT (N)
	TONNE	m3	m3	m3	m3	m3
SEWER LIFT STATION ACCESS ROAD	0.68	17.4	8	1.3	7	48
TOTAL	0.68	17.4	8	1.3	7	48

FENCE

LOCATION	CHAIN LINK FENCE (TYPE CL 1.80)	2.4 CHAIN LINK GATE (TYPE CL 1.80)
	M	EA
SEWER LIFT STATION	23	2
TOTAL	23	2

CONCRETE SLAB

LOCATION	Concrete	Rebars			Joint Sealant	Water Proofing Membrane	Geofabric
		#13	#16	#19			
	m3	m	m	m	m	m2	m2
Sewer Lift Station	9.7	59.7	179.3	188.9	37	25.4	37.3
TOTAL	9.7	59.7	179.3	188.9	37	25.4	37.3

04-0120R4
CONTRACT CHANGE ORDER NO. 69
SHEET 108 OF 113

SUMMARY OF QUANTITIES

Q-1

DESIGN OVERSIGHT — HONG WONG
CALCULATED/DESIGNED BY
CHECKED BY
DATE REVISED BY
DATE REVISED

STATE OF CALIFORNIA - DEPARTMENT OF TRANSPORTATION
Caltrans

LAST REVISION 00-00-00
DATE PLOTTED => $DATE
TIME PLOTTED => $TIME

RELATIVE BORDER SCALE IS IN MILLIMETERS 0 20 40 60 80
DGN FILE => $REQUEST
USERNAME => $USER
CU 04251
EA 0120R1

INDEX TO ELECTRICAL PLAN

DWG. NO.	DESCRIPTION
E-1	GENERAL NOTES, SYMBOLS AND ABBREVIATIONS
E-2	SIGNAL AND LIGHTING SOUTH-SOUTH DETOUR PUMP STATION
E-3	PARTIAL ONE LINE DIAGRAM SOUTH-SOUTH DETOUR PUMP STATION
E-4	CITY OF SAN FRANCISCO STREET LIGHT TYPICAL DETAIL SOUTH-SOUTH DETOUR PUMP STATION

PROJECT SYMBOLS:

(See ES-1A and ES-1B for additional Standard Symbols)

- Surface mounted Special Receptacle.
- Electrical Equipment or Device
- 30A — Disconnect switch, size as noted
- Package Pump Controller
- (1) — Sheet notes, applicable only to the drawings.
- [1] — Project notes, applicable for all drawings.
- (C) — City Standard Electrolier

ABBREVIATIONS

(See ES-1A and ES-1B for additional Standard Symbols)

A, Amp	Ampere
BKR	Breaker
CEC	California Electrical Code
CU	Copper
(E), Exist	Existing
G, GND, Gnd	Ground
SFPUC	San Francisco Public Utility Commission
kV	Kilovolt
kVA	Kilovolt-Ampere
MTS	Manual Transfer Switch
mh	Existing manhole
(N)	New
PB	Pullbox
VIF	Verify in Field
W	Wire
WP	Weatherproof
YBI	Yerba Buena Island
(R)	RELOCATED

GENERAL NOTES

1. Conduit routing is diagramatic. Pull box location shall be located as shown on plans. The contractor shall provide additional pull boxes as required. Exact locations of equipment and devices may be adjusted depending on field conditions or by the engineer.
2. Minimum size of conduit shall be 21C. Exposed conduit shall be PVC coated galvanized rigid steel.
3. Conduit fitting for 78 mm conduits and larger shall have a 610 minimum bending radius.
4. All equipment and devices shall be provided with wire ground.
5. All feeders and branch circuits shall be provided with ground wire.
6. Contractor shall label all conductors and cables per wiring diagrams.
7. All E-sheets are accurate for electrical work only.
8. All existing equipment shall remain in place unless otherwise noted.
9. Locations of conduits, pull boxes and other equipment shown on the plan are approximate and may be changed to suit field conditions.
10. The contractor shall call Underground Service Alert (USA) at (800) 642-2444, 48 hours prior to all excavation.
11. All exposed circuit or conductor connections shall be protected with a corrosion coating.
12. Contractor to verify in field existing live circuit prior to cutting and splicing.
13. Pullboxes installed on the shoulder of Roadway shall have Traffic Cover.

Caltrans Metric

DIST	COUNTY	ROUTE	KILOMETER POST TOTAL PROJECT	SHEET No	TOTAL SHEETS
04	SF	80	12.6/13.2	7	11

Carol Light — 5/18/07
REGISTERED ELECTRICAL ENGINEER — DATE

REGISTERED PROFESSIONAL ENGINEER — CAROL LIGHT — No. 10145 — Exp. 09/30/07 — ELECTRICAL — STATE OF CALIFORNIA

PLANS APPROVAL DATE

PARSONS BRINCKERHOFF QUADE & DOUGLAS, INC.
303 Second St., Suite 700N
San Francisco, CA 94107-1317

SILVERMAN & LIGHT
1201 PARK AVENUE - SUITE 100
EMERYVILLE, CA 94608-3632

The State of California or its officers or agents shall not be responsible for the accuracy or completeness of electronic copies of this plan sheet.

Caltrans now has a web site! To get to the web site, go to http://www.dot.ca.gov

04-0120R4
CONTRACT CHANGE ORDER NO. 69
SHEET 109 OF 113

GENERAL NOTES AND SYMBOLS
SOUTH-SOUTH DETOUR PUMP STATION

E-1

THIS PLAN ACCURATE FOR ELECTRICAL WORK ONLY

FOR REDUCED PLANS ORIGINAL SCALE IS IN MILLIMETERS 0 20 40 60 80

DGN FILE => T:\13103\MS\SS_detour\Sewer Lift Station\sheet files\ua01.dgn
USERNAME => $USER

CU 04251 | EA 0120R1

LAST REVISION 00-00-00 | DATE PLOTTED => 5/18/2007 | TIME PLOTTED => $TIME

DESIGN OVERSIGHT: Hong Wong

CALCULATED/DESIGNED BY: BJ
CHECKED BY: CL

DATE	REVISED BY	DATE REVISED

STATE OF CALIFORNIA - DEPARTMENT OF TRANSPORTATION
Caltrans

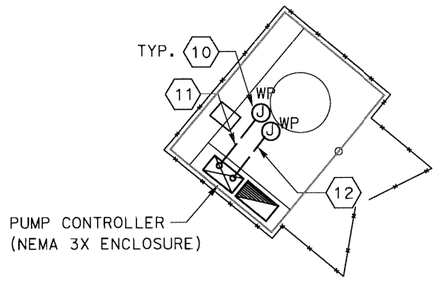

TIS-041 PUMP STATION

SCALE: 1:100

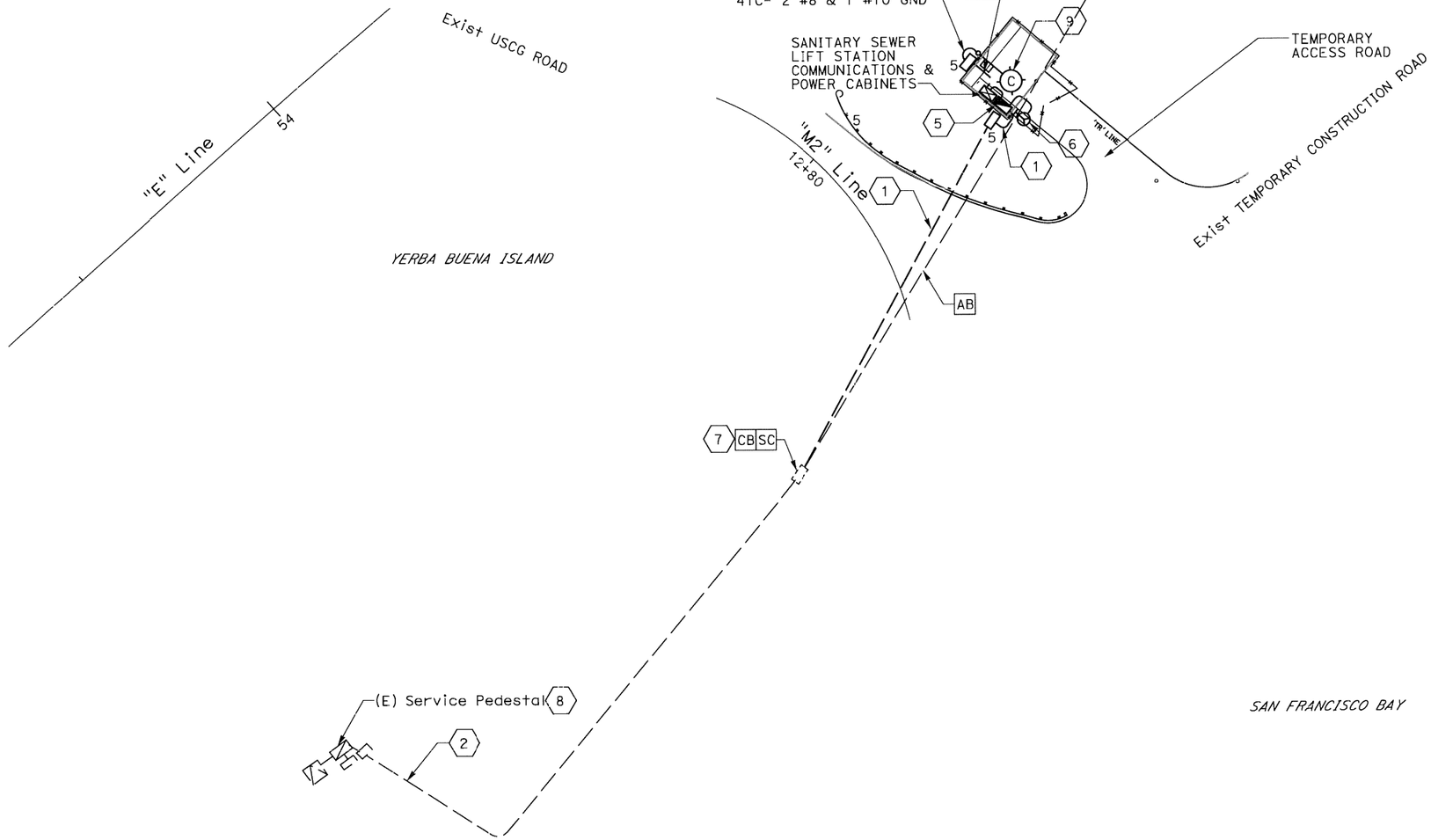

Caltrans Metric

DIST	COUNTY	ROUTE	KILOMETER POST TOTAL PROJECT	SHEET No	TOTAL SHEETS
04	SF	80	12.6/13.2	8	11

Carol Light — 5/18/07
REGISTERED ELECTRICAL ENGINEER — DATE

REGISTERED PROFESSIONAL ENGINEER
CAROL LIGHT
No. 10145
Exp. 09/30/07
ELECTRICAL
STATE OF CALIFORNIA

PLANS APPROVAL DATE

PARSONS BRINCKERHOFF QUADE & DOUGLAS, INC.
303 Second St., Suite 700N
San Francisco, CA 94107-1317

SILVERMAN & LIGHT
1201 PARK AVENUE - SUITE 100
EMERYVILLE, CA 94608-3632

The State of California or its officers or agents shall not be responsible for the accuracy or completeness of electronic copies of this plan sheet.

Caltrans now has a web site! To get to the web site, go to http://www.dot.ca.gov

SHEET NOTES:

1. Install new 41C, 4 #1/0, 1 #6 Ground (208 V, 3-phase, Sewer Lift pump).
2. Existing 41c, with 4 #2/0 and #6 Ground.
3. Disconnect existing Sewer Lift Pump controller from existing feeder after new pump is operational. Turn over existing pump controller cabinets to SFPUC water waste division.
4. Install new free-standing pad mounted Nema 4X Lift Pump Controller Panel Enclosure. Controller Enclosure is furnished by the Vendor. Mounting detail by Supplier.
5. Install new stainless steel free-standing pad mounted Nema 4X Enclosure with non-fuseable disconnect and Manual transfer switch mounted on the interior of the enclosure.
6. Install New 100 Amp, 3-pole, 4-wire, 600 VAC, Heavy Duty Breaking Receptacle (for portable generator connection) with spring door "Crouse-Hinds catalog #AR-1041". Mount receptacle on the left side of the enclosure at +36" above finished grade.
7. Splice new conductors to existing conductors only when the new Lift Pump Station is ready to be energized. Old Lift station to remain in operational until new Pump Station is energized and functional. Contractor to field verify exact location of existing pullbox.
8. At existing service pedestal, replace existing 200 A, 3-Pole circuit breaker with 100 A, 3-pole circuit breaker. Type and interrupting capacity to match existing.Schedule replacement when new pump is ready for operation and coordinate down time with SFPUC.
9. Install Permanent City of San francisco Standard Cobra style light pole with bracket arm assemblies as shown on E-4 with 200 watts clear HPS lamp and with integral 120 V ballast. Install new fused splice connector in adjacent pullbox. Install new PEU on top of the electrolier. Locate light pole as directed by the Engineer. See Caltrans standard details ES-13A and ES13-B for more information.
10. NEMA 3X Junction Box. Coordinate with the Pump Vendor for size and location prior to installation.
11. Provide conduit(s) from Pump controller to Juction Box (for Controls). Coordinate with the Pump Vendor for size and quantity prior to installation.
12. Provide conduit(s) from Pump controller to Juction Box (for pump motor). Coordinate with the Pump Vendor for size and quantity prior to installation.

04-0120R4
CONTRACT CHANGE ORDER NO. 69
SHEET 110 OF 113

ELECTRICAL WORK
SOUTH-SOUTH DETOUR PUMP STATION

SCALE: 1:200

E-2

REVISED BY	DATE	DATE REVISED
BJ		CL

CALCULATED/DESIGNED BY
CHECKED BY

DESIGN OVERSIGHT
Hong Wong

STATE OF CALIFORNIA - DEPARTMENT OF TRANSPORTATION
Caltrans

LAST REVISION 00-00-00
DATE PLOTTED => 5/18/2007
TIME PLOTTED => $TIME

THIS PLAN ACCURATE FOR ELECTRICAL WORK ONLY

FOR REDUCED PLANS ORIGINAL SCALE IS IN MILLIMETERS 0 20 40 60 80

DGN FILE => T:\13103\MS\SS_detour\Sewer Lift Station\sheet files\ua02.dgn
USERNAME => $USER

CU 04251

EA 0120R1

DIST	COUNTY	ROUTE	KILOMETER POST TOTAL PROJECT	SHEET No	TOTAL SHEETS
04	SF	80	12.6/13.2	9	11

Caltrans Metric

Carol Light 5/18/07
REGISTERED ELECTRICAL ENGINEER DATE

REGISTERED PROFESSIONAL ENGINEER
CAROL LIGHT
No. 10145
Exp. 09/30/07
ELECTRICAL
STATE OF CALIFORNIA

PLANS APPROVAL DATE

PARSONS BRINCKERHOFF QUADE & DOUGLAS, INC.
303 Second St., Suite 700N
San Francisco, CA 94107-1317

SILVERMAN & LIGHT
1201 PARK AVENUE - SUITE 100
EMERYVILLE, CA 94608-3632

The State of California or its officers or agents shall not be responsible for the accuracy or completeness of electronic copies of this plan sheet.

Caltrans now has a web site! To get to the web site, go to http://www.dot.ca.gov

CONTRACT NO. 04-0120R4

CONTRACT CHANGE ORDER NO 69

SHEET 111 OF 113

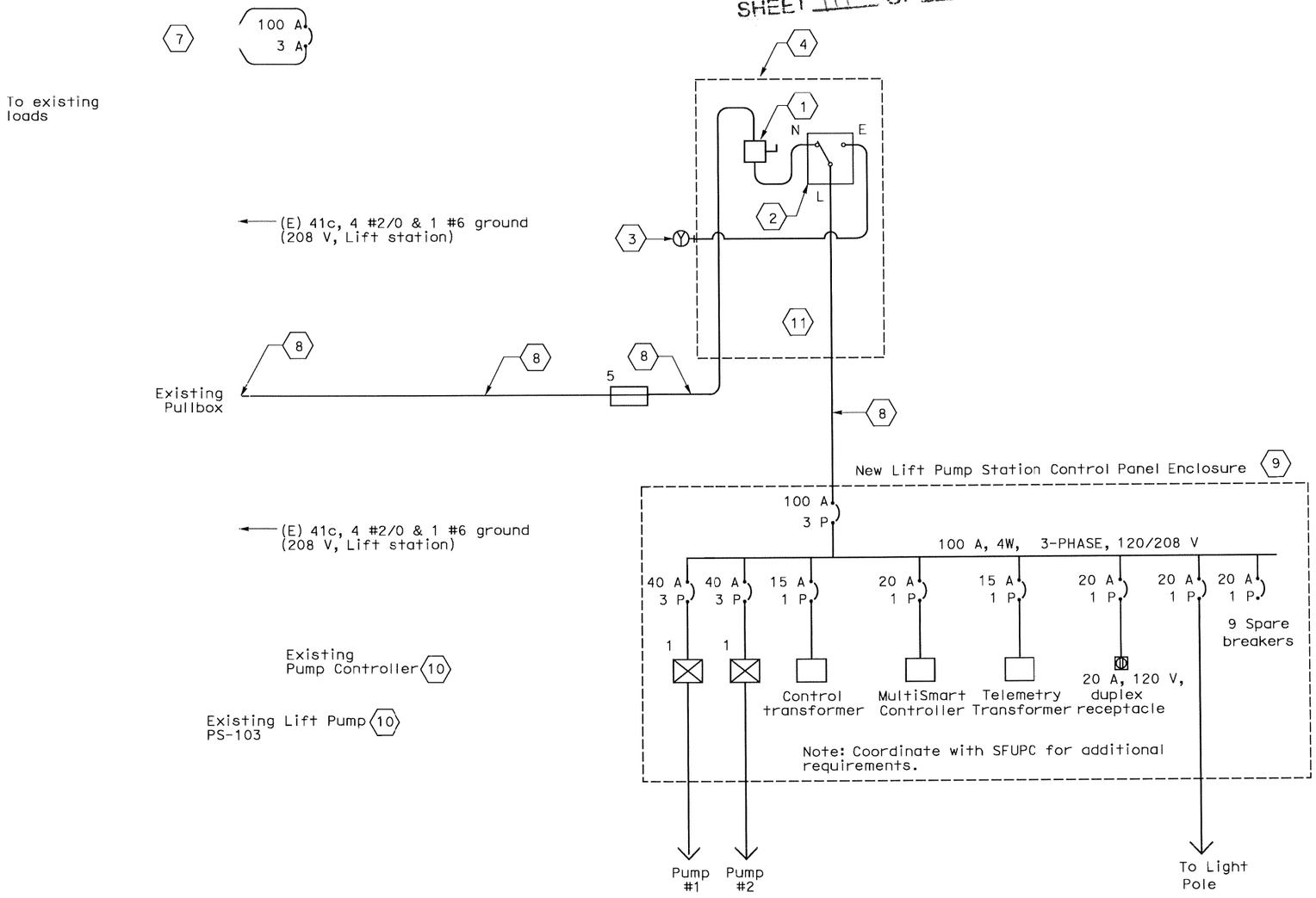

120/208 V SERVICE ENCLOSURE NO.B WIRING DIAGRAM

NO SCALE

SHEET NOTES:

1. 100 A, 3-Pole, 4-wire Main Non-Fusible Disconnect switch mounted on the interior of the Nema 4X Enclosure.
2. 100 A, 208 V, 3-pole, 4-Wire Manual Transfer Switch mounted on the interior of the Nema 4X enclosure.
3. "Crouse-Hinds Cat # AR1041" 100 Ampere, 4-pole, 4-wire Heavy Duty Circuit breaking receptacle with Spring door. Surface mount receptacle on the exterior of the panel at +36" above concrete pad.
4. Free-standing Pad Mounted Nema 4X Panel Enclosure for 200A manual transfer switch and non-fuseable 200 A , 3-pole disconnect switch.
5. Contractor to verify in field exact location of existing Pullbox.
6. See Contract Plan for Cables, Conduit Size and Quantity.
7. Replace existing 200 A-3pole circuit breaker with new 100 A-3pole Circuit Breaker.
8. Install 41C with 4 #1/0 and 1 #6 Ground.
9. Free-standing Pad Mounted Nema 4X Pump Control Panel Enclosure. See specs for more information. Control panel and wiring within the enclosure is by the Vendor except that contractor shall make connection to main circuit breaker and to the light pole. Wiring to Pump motors and to the level switches by Vendor.
10. Disconnect existing Lift pump cotroller and turn over to SFPUC Waste Water Division. Remove and scrap all related conduit and wire after new permanent Lift Pump is installed.
11. Provide two 19mm x 3 M UL listed copper-clad ground rods installed a minimum 1.8 M apart in undesturbed earth. Provide #6 bare copper connection between ground rods with connection to concrete pad structural steel at two points and a #6 pigtail connection to each enclosure.

ELECTRICAL DETAILS
ONE LINE DIAGRAM
SOUTH-SOUTH DETOUR PUMP STATION

E-3

STATE OF CALIFORNIA - DEPARTMENT OF TRANSPORTATION
Caltrans

DESIGN OVERSIGHT: Hong Wong

DATE	BY	REVISED BY	DATE REVISED
	BJ	CL	

CALCULATED/DESIGNED BY
CHECKED BY

LAST REVISION 00-00-00
DATE PLOTTED => $DATE
TIME PLOTTED => $TIME

THIS PLAN ACCURATE FOR ELECTRICAL WORK ONLY

FOR REDUCED PLANS ORIGINAL SCALE IS IN MILLIMETERS 0 20 40 60 80

DGN FILE => $REQUEST
USERNAME => $USER

CU 04251 EA 0120R1

DIST	COUNTY	ROUTE	KILOMETER POST TOTAL PROJECT	SHEET No	TOTAL SHEETS
04	SF	80	12.6/13.2	10	11

Carol Light — REGISTERED ELECTRICAL ENGINEER — 5/18/07 DATE

PLANS APPROVAL DATE

REGISTERED PROFESSIONAL ENGINEER — CAROL LIGHT — No. 10145 — Exp. 09/30/07 ELECTRICAL — STATE OF CALIFORNIA

PARSONS BRINCKERHOFF QUADE & DOUGLAS, INC.
303 Second St., Suite 700N
San Francisco, CA 94107-1317

SILVERMAN & LIGHT
1201PARK AVENUE - SUITE 100
EMERYVILLE, CA 94608-3632

The State of California or its officers or agents shall not be responsible for the accuracy or completeness of electronic copies of this plan sheet.

Caltrans now has a web site! To get to the web site, go to http://www.dot.ca.gov

Caltrans Metric

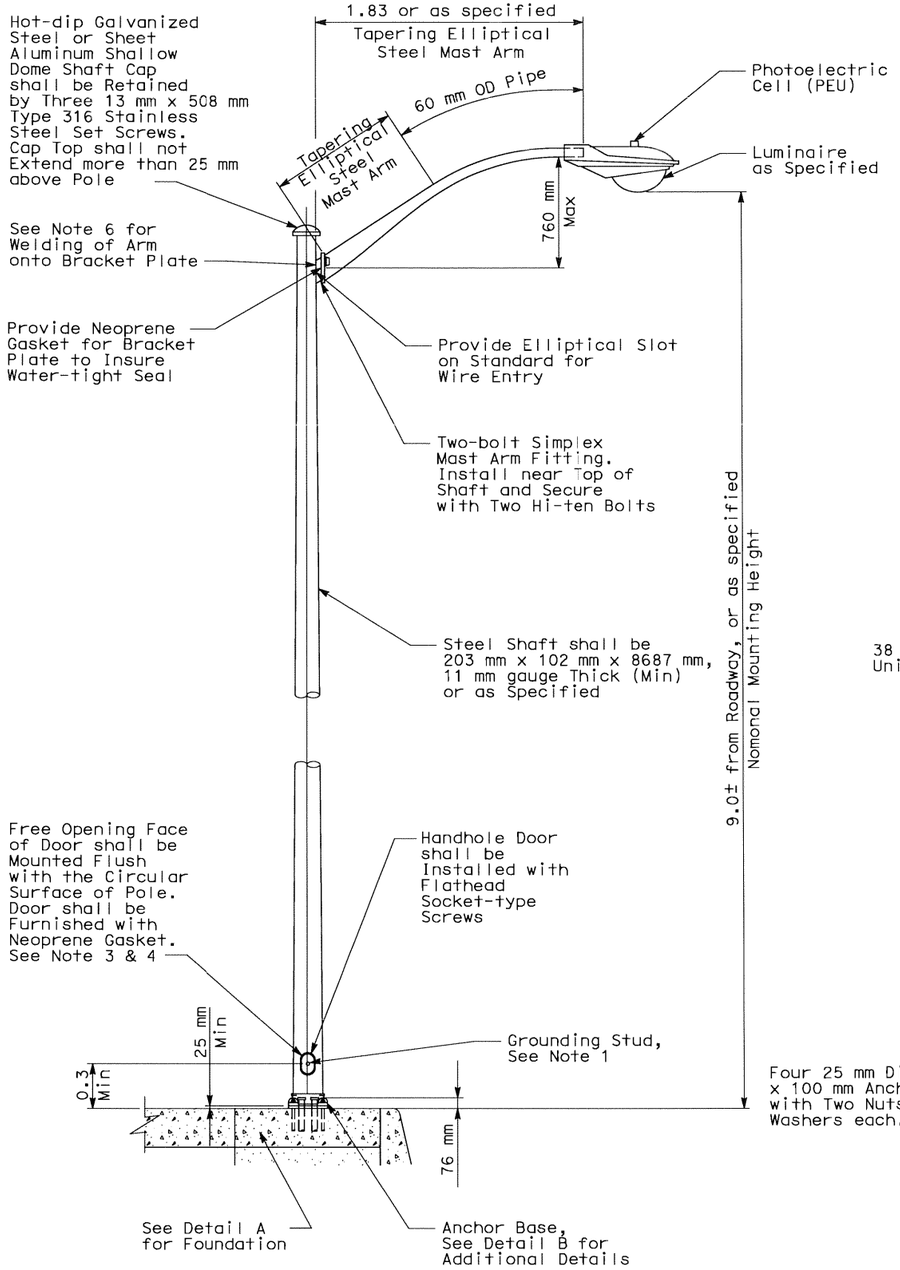

SIDE ELEVATION

DETAIL A

STREET LIGHT ON STEEL SHAFT WITH ELLIPTICAL BRACKET ARM

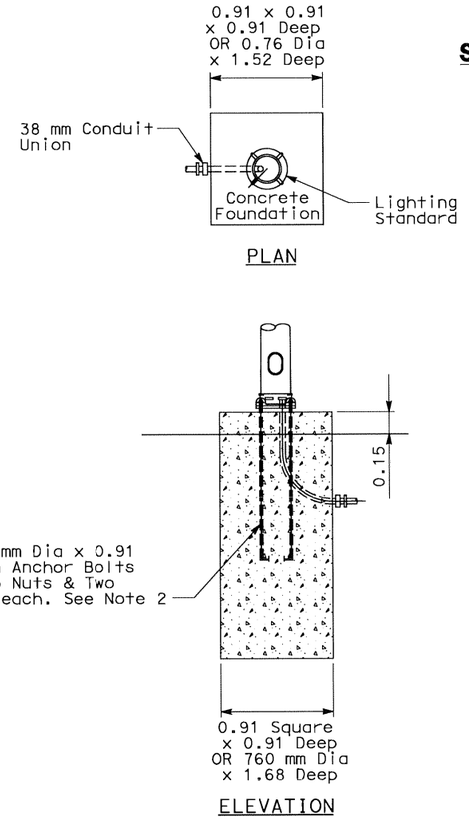

PLAN

ELEVATION

DETAIL A

FOUNDATION FOR STREET LIGHT IN UNPAVED AREA

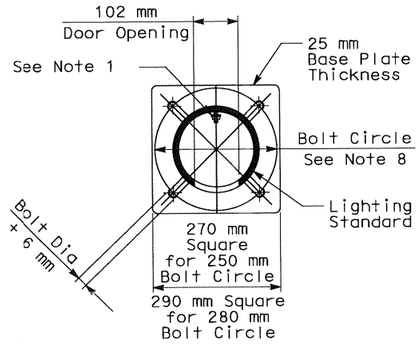

PLAN

DETAIL B

STANDARD ANCHOR BASE

04-0120R1

CONTRACT CHANGE ORDER NO. 69

SHEET 112 OF 113

NOTES

1. Ground Stud (Welded to Interior Surface of Shaft Opposite Door Opening). Stud shall be 6 mm x 508 mm (Continuosly Threaded) x 19 mm and shall be Furnished with A Type 316 Stainless Steel Nut and A Stainless Steel Shakeproof Washer.
2. Each Anchor Bolt-Threaded Top 200 mm.
3. The Standard, Handhole Cover, Mast Arm, and Anchor Bolts with Nuts & Washers, shall be Hot-dip Galvanized after Fabrication.
4. The Handhole Cover or Door shall have the same Radius of Curvature as the Shaft and when Installed, shall Form a Symmetrical Appearance with the Shaft.
5. The Tapering Elliptical Section shall not be more than Two-thirds the Length of the Mast Arm and shall Taper to the External Diameter of 50 mm Pipe.
6. All Exposed Welds shall be Ground Smooth and shall Conform to Contours of Adjacent Surfaces. All Welds shall have a Finished Depth of 10 mm.
7. Door or Handhole Cover shall be Securely Retained in Place with Two 6 mm x 500 mm Stainless Steel Screws.
8. For Shafts of 7.6 m or Less in Length, the Bolt Circle shall be 250 mm, unless otherwise Noted. For Shafts more than 7.6 m in Length, the Bolt Circle Diameter shall be 280 mm.
9. The Threads of All Fasteners shall be Coated with an Approved Industrial Type of Water-proof Grease Lubricant Containing a High Content of Graphite.
10. The Door or Handlehole Cover Gasket shall be Mounted to the Cover with an Approved Type of Automotive Engine Gasket Cement. The Non-cemented Surface of the Gasket shall be Coated with a Silicone Impregnated Rubber Lubricant.

CITY OF SAN FRANCISCO LIGHT POLE TYPICAL DETAIL

SOUTH-SOUTH DETOUR PUMP STATION

SCALE: 1:20

ALL DIMENSIONS ARE IN METERS UNLESS OTHERWISE SHOWN

THIS PLAN ACCURATE FOR ELECTRICAL WORK ONLY

E-4

DESIGNED BY	CHECKED BY	CALCULATED/ DESIGNED BY	DATE	REVISED BY	DATE REVISED
Hong Wong		BJ		CL	

DESIGN OVERSIGHT

STATE OF CALIFORNIA - DEPARTMENT OF TRANSPORTATION

Caltrans

LAST REVISION 00-00-00 — DATE PLOTTED => 5/18/2007 — TIME PLOTTED => $TIME

FOR REDUCED PLANS ORIGINAL SCALE IS IN MILLIMETERS 0 20 40 60 80

DGN FILE => T:\13103\MS\SS_detour\Sewer Lift Station\sheet files\ua04.dgn
USERNAME => $USER

CU 04251

EA 0120R1

DIST	COUNTY	ROUTE	KILOMETER POST TOTAL PROJECT	SHEET No	TOTAL SHEETS
04	SF	80	12.6/13.2	11	11

REGISTERED MECHANICAL ENGINEER

PLANS APPROVAL DATE

REGISTERED PROFESSIONAL ENGINEER KENNETH JOHN HARRIS No. M22087 Exp. 12-31-07 MECHANICAL STATE OF CALIFORNIA

The State of California or its officers or agents shall not be responsible for the accuracy or completeness of electronic copies of this plan sheet.

CONTRACT NO. 04-0120R1

CONTRACT CHANGE ORDER NO 69

SHEET 113 OF 113

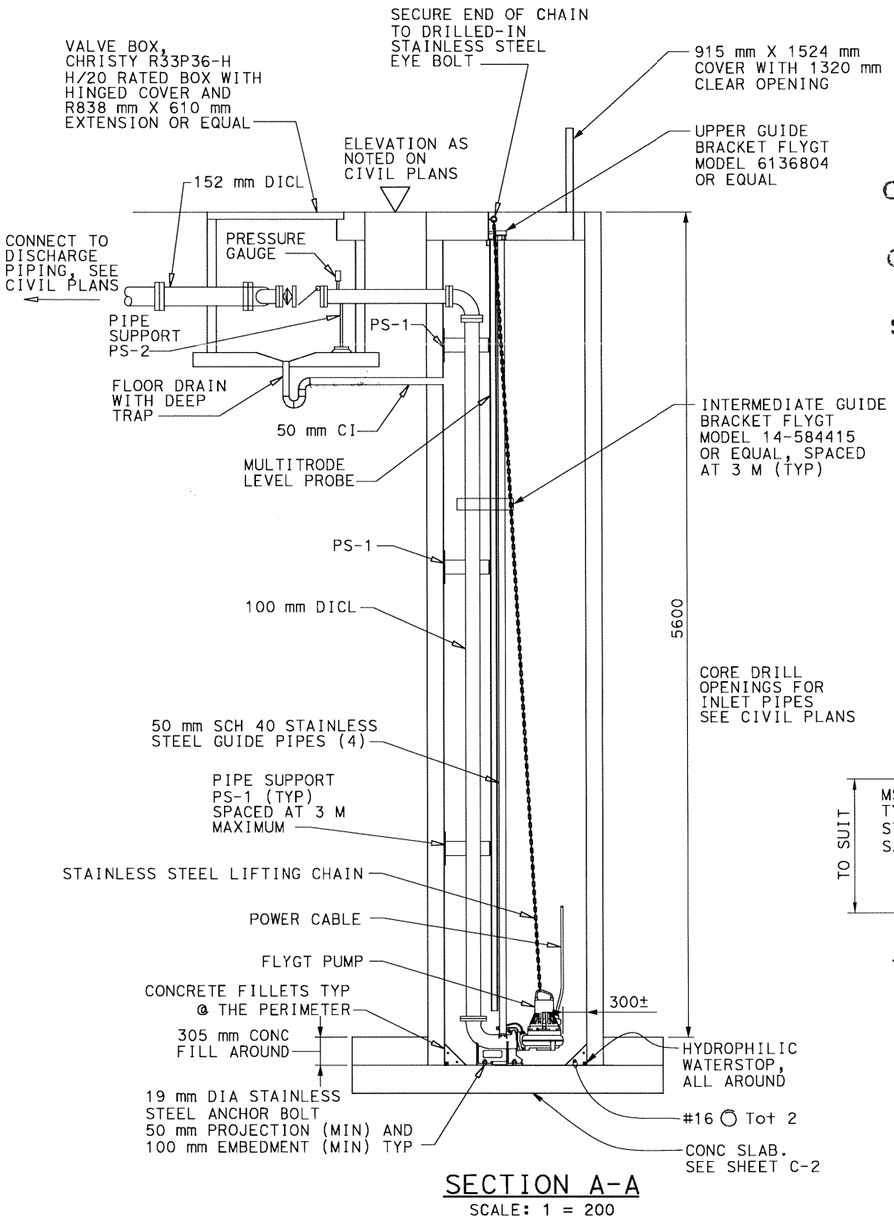

SECTION A-A

SCALE: 1 = 200

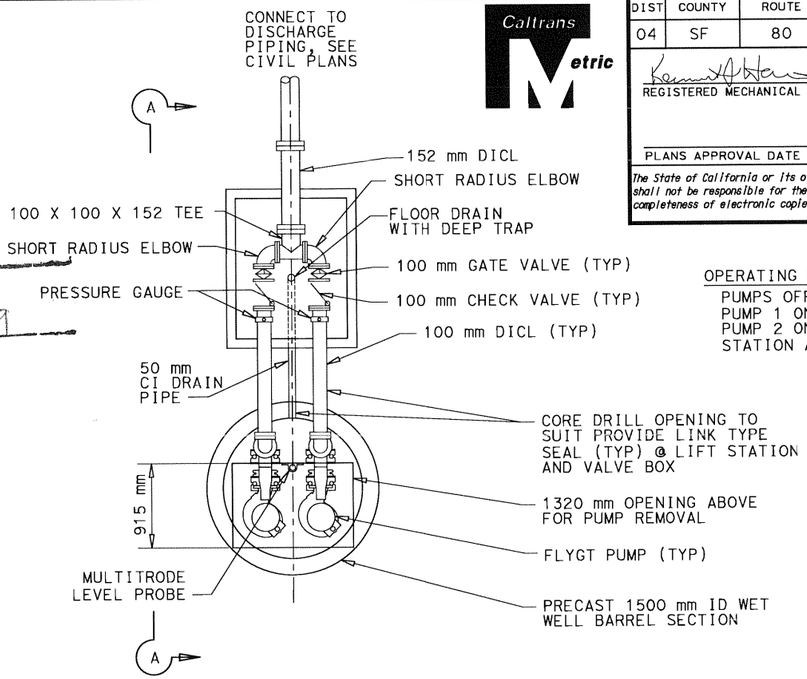

OPERATING POINTS:

PUMPS OFF	900 mm
PUMP 1 ON	2100 mm
PUMP 2 ON	2400 mm
STATION ALARM	2700 mm

NEW PUMP STATION PLAN

SCALE: 1 = 200

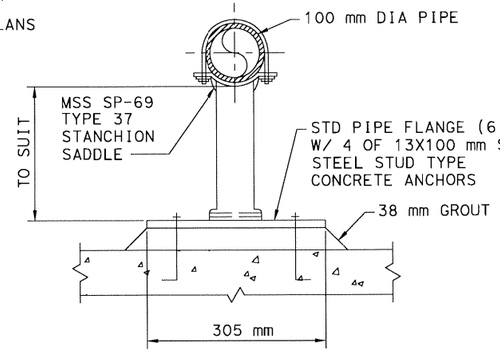

PIPE SUPPORT PS-2

SCALE : 1 = 50

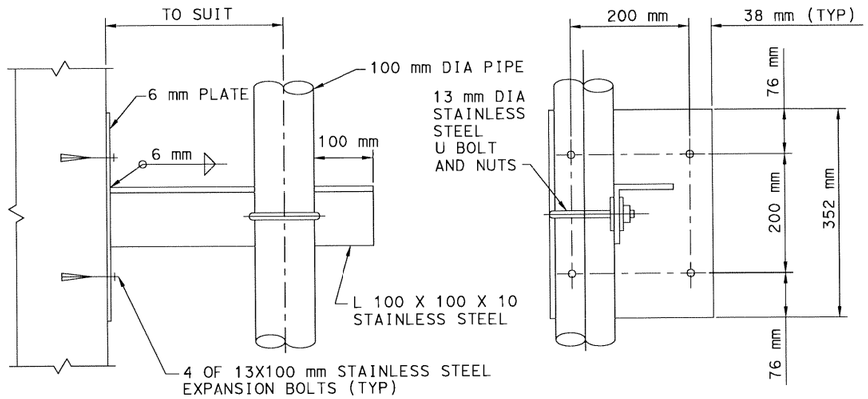

PIPE SUPPORT PS-1

SCALE : 1 = 50

CONTRACT CHANGE ORDER NO._____

SHEET 11 OF 11

ALL DIMENSIONS ARE IN MILLIMETERS UNLESS OTHERWISE SHOWN

DESIGN OVERSIGHT		DESIGN	BY K Harris	CHECKED B Melvin	PREPARED FOR THE STATE OF CALIFORNIA DEPARTMENT OF TRANSPORTATION
SIGN OFF DATE		DETAILS	BY K King	CHECKED	
		QUANTITIES	BY	CHECKED	

PROJECT ENGINEER

BRIDGE NO. 34-0006(TEMP)

KILOMETER POST 12.6

SOUTH-SOUTH DETOUR

TIS 041 PUMP STATION

DESIGN DETAIL SHEET (METRIC) (REV. 3/1/98)

ORIGINAL SCALE IN MILLIMETERS FOR REDUCED PLANS 0 10 20 30 40 50 60 70 80 90 100

CU 04251
EA 0120R1

FILE => $REQUEST

DISREGARD PRINTS BEARING EARLIER REVISION DATES

REVISION DATES (PRELIMINARY STAGE ONLY): 2/19/07

SHEET 1 OF 1

USERNAME => $USER DATE PLOTTED => $DATE TIME PLOTTED => $TIME

STATE OF CALIFORNIA - DEPARTMENT OF TRANSPORTATION

CONTRACT CHANGE ORDER MEMORANDUM

DATE: 6/15/2007 RECEIVED

006789 DEC 14 6

TO: MIKE FORNER / DENNIS TURCHON	FILE: **E.A.** 04 - 0120R4
FROM: MAHANTESH ANIGOL	**CO-RTE-PM** SF-80-12.6/13.2
	FED. NO. ACBRIM-080-1(097)N
CCO#: **69** SUPPLEMENT#: **0** Category Code: **CAXX**	CONTINGENCY BALANCE (incl. this change) **$13,570,558.22**
COST: **$111,280.00** INCREASE ☑ DECREASE ☐	HEADQUARTERS APPROVAL REQUIRED? ☑ YES ☐ NO
SUPPLEMENTAL FUNDS PROVIDED: **$0.00**	IS THIS REQUEST IN ACCORDANCE WITH ENVIRONMENTAL DOCUMENTS? ☑ YES ☐ NO
CCO DESCRIPTION: Pump and Control Panel Procurement	**PROJECT DESCRIPTION:** CONSTRUCT ROUTE 80 TEMP BYPASS STRUCTURE

Original Contract Time:	Time Adj. This Change:	Previously Approved CCO Time Adjustments:	Percentage Time Adjusted: (including this change)	Total # of Unreconciled Deferred Time CCO(s): (including this change)
475 Day(s)	**0** Day(s)	**381** Day(s)	**80** %	**7**

THIS CHANGE ORDER PROVIDES FOR:

the procurement of the pumps, motors and control panel for the construction of a sanitary sewer lift station. This change also includes generation and submittal of shop plans, all freight charges, and equipment manuals.

Construction of the new sanitary sewer lift station will be addressed in a forthcoming supplemental to this Contract Change Order (CCO) as CCO No. 69S1.

The existing sanitary sewer lift station is in conflict with proposed footings for the new East Tie-In (ETI) design. Contract Change Order No. 35 allowed the contractor to propose an alternate design concept for the ETI segment of the Temporary Bypass Structure (TBS). This change in design required additional footings that conflict with the existing pump station. For this reason, the Department is working with San Francisco Public Utilities Commission (SFPUC) to construct a new sanitary sewer lift station, as SFPUC will be the owner and maintain the pump station. The existing sanitary sewer lift station is the property of the SFPUC and any salvagable equipment will be recovered by them.

This work is a part of the Strategy for South-South Detour Contract Completion, dated December 14, 2006, for East Tie-In work as the design has been transferred to the Department, to allow for the roll-out/roll-in method of construction.

This work will be paid as extra work at force account at an agreed lump sum of $111,280.00. No supplemental funds are available for this work, therefore this CCO will be financed from the contingency fund. A cost analysis is on file to support this amount.

No adjustment of contract time is warranted due to this change.

Approval of the change order is recommended by the Resident Engineer.

Bob Zandipour, Branch Chief Office of Toll Bridge Design requested this change on 03/19/07. Alec Melkonians, Project Manager has approved of the design, per 06/17/07 memo, and Robert Kobal, Headquarters' Assistant Construction Coordinator, concur with this change.

ADA Notice: For individuals with sensory disabilities, this document is available in alternate formats. For information call: (916) 654-6410 or TDD (916) 654-3880 or write Records and Forms Management, 1120 N Street, MS-89, Sacramento, CA 95814.

CONCURRED BY:			
Construction Engineer:	Mahantesh Anigol	MA Date	8/20/07
Bridge Engineer:		Date	
Project Engineer:	Bob Zandiopour	Date	3/19/07
Project Manager:	Alec Melkonians	Date	6/20/07
FHWA Rep.:		Date	
Environmental:		Date	
Other (specify):		Date	
Other (specify):		Date	
District Prior Approval By:		Date	
HQ (Issue _Approve) By:		Date	
Resident Engineer's Signature:	M. U. Anigol	Date	8/20/07

ESTIMATE OF COST

	THIS REQUEST	TOTAL TO DATE
ITEMS	$0.00	$0.00
FORCE ACCOUNT	$0.00	$0.00
AGREED PRICE	$111,280.00	$111,280.00
ADJUSTMENT	$0.00	$0.00
TOTAL	$111,280.00	$111,280.00

FEDERAL PARTICIPATION

☐ PARTICIPATING ☐ PARTICIPATING IN PART ☐ NONE
☐ NON-PARTICIPATING (MAINTENANCE) ☑ NON-PARTICIPATING

FEDERAL SEGREGATION (if more than one Funding Source or P.I.P. type)
☑ CCO FUNDED PER CONTRACT ☐ CCO FUNDED AS FOLLOWS

FEDERAL FUNDING SOURCE	PERCENT

ADA Notice: For individuals with sensory disabilities, this document is available in alternate formats. For information call: (916) 654-6410 or TDD (916) 654-3880 or write Records and Forms Management, 1120 N Street, MS-89, Sacramento, CA 95814.

STATE OF CALIFORNIA - DEPARTMENT OF TRANSPORTATION

CONTRACT CHANGE ORDER

Change Requested by: Engineer

CCO 69 | Suppl. No. 1 | Contract No. 04 - 0120R4 | Road SF-80-12.6/13.2 | FED. AID LOC.: ACBRIM-080-1(097)N

To: CC MYERS INC

You are directed to make the following changes from the plans and specifications or do the following described work not included in the plans and specifications for this contract. ***NOTE: This change order is not effective until approved by the Engineer.***

Description of work to be done, estimate of quantities and prices to be paid. (Segregate between additional work at contract price, agreed price and force account.) Unless otherwise stated, rates for rental of equipment cover only such time as equipment is actually used and no allowance will be made for idle time. This last percentage shown is the net accumulated increase or decrease from the original quantity in the Engineer's Estimate.

Extra Work at Lump Sum:

Construct sanitary sewer lift station (pump station) in accordance with the plans and specifications as shown on sheets 3 through 115 of this change order. These plans and specifications replace the plans and specifications (sheets 2 through 21 of Contract change order No. 69-S0) previously issued with Contract Change Order No. 69-S0. The cost for the procurement of the pumping and associated electrical equipment have been compensated for under previously issued Contract Change Order No. 69-S0.

The third paragraph, with all five of its subparagraphs specified in Section 5-1.08 "Areas for Contractor's Use", does not apply to this change order. Additionally, Section 5-1.12 "Permits and Lincenses" also does not apply to this change order.

The control panel specified in section 10-1.18 "Sanitary Sewer Lift Station" (sheet 59 of 115 of this change order) shall be a minimum size of 1520 mm x 1219 mm (60 inch x 48 inch wide), and separate the high and low voltage vertically.

This change order price includes full compensation for stockpiling, sampling, testing, loading, transporting and offsite disposal of approximately 150 cubic meters of hazardous or Class II material excavated during the change order work, in accordance with the provisions of contract special provisions section 10-1.42 EARTHWORK.

This change order price excludes removal of existing pipes that are not in conflict with work contemplated under this contract.

Any required Storm Water Pollution Prevention Plan (SWPPP) work will be compensated for under the existing contract items and change orders issued for this work.

For this extra work, the Contractor will be compensated $499,996.00 This lump sum constitutes full compensation, including markups, for furnishing all labor, material, tools, equipment, and incidentals for doing the work involved in this change.

Total Cost of Extra Work at Lump Sum $499,996.00

All payment clauses contained within this change order's specifications are amended such that all work performed under this change order will be compensated for as extra work at agreed lump sum as part of this change order. The Contractor shall submit to the Engineer for approval, a schedule of values detailing the cost breakdown of the lump sum item for this change order. The sum of the amounts for the items and work listed in the schedule of values shall be equal to the change order lump sum price. The schedule of values will be used only to determine progress payments during the progress of the work. No payment for this change order will be made until the schedule of values is approved in writing by the Engineer.

CONTRACT CHANGE ORDER

Change Requested by: Engineer

CCO 69 | Suppl. No. 1 | Contract No. 04 - 0120R4 | Road SF-80-12.6/13.2 | FED. AID LOC.: ACBRIM-080-1(097)N

Estimated Cost: Increase ☑ Decrease ☐ $499,996.00

By reason of this order the time of completion will be adjusted as follows: Deferred

Submitted by

Signature	Resident Engineer	Date
	WILLIAM CASEY	2-11-08

Approval Recommended by

Signature	Area Construction Manager	Date
	DENNIS TURCHON	2/11/08

Engineer Approval by

Signature	Area Construction Manager	Date
	DENNIS TURCHON	2/17/08

We the undersigned contractor, have given careful consideration to the change proposed and agree, if this proposal is approved, that we will provide all equipment, furnish the materials, except as may otherwise be noted above, and perform all services necessary for the work above specified, and will accept as full payment therefor the prices shown above.

NOTE: If you, the contractor, do not sign acceptance of this order, your attention is directed to the requirements of the specifications as to proceeding with the ordered work and filing a written protest within the time therein specified.

Contractor Acceptance by

Signature	(Print name and title)	Date
	DANIEL E. HIMICK, PRESIDENT	3/10/08

Contract No. 04-0120R4

04-SF-80 (KP 12.6/13.2)

SPECIAL PROVISIONS
For
CONTRACT CHANGE ORDER No. 69S1

CONTRACT NO. 04-0120R4

CONTRACT CHANGE ORDER NO 69S1

SHEET 3 OF 110

Date May 18, 2007

CONTRACT NO. 04-0120R4
(Contract Change Order No. 69S1)

The special provisions contained herein have been prepared by or under the direction of the following Registered Persons.

CIVIL/ROADWAY

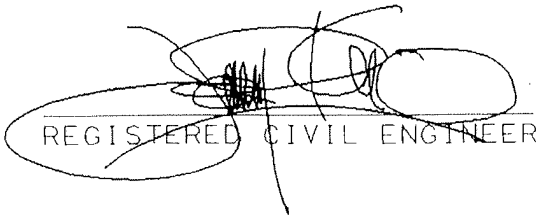

05/18/07

CONTRACT NO. 04-0120R4

CONTRACT CHANGE ORDER NO 69S1

SHEET 4 OF 115

CONTRACT NO. 04-0120R4
(Contract Change Order No. 69S1)

The special provisions contained herein have been prepared by or under the direction of the following Registered Persons.

MECHANICAL

Kenneth J Harris 05/18/07
REGISTERED MECHANICAL ENGINEER

CONTRACT NO. 04-0120R4

CONTRACT CHANGE ORDER NO 69S1

SHEET 5 OF 115

CONTRACT NO. 04-0120R4
(Contract Change Order No. 69S1)

The special provisions contained herein have been prepared by or under the direction of the following Registered Persons.

STRUCTURES

REGISTERED CIVIL ENGINEER 05/18/07

REGISTERED PROFESSIONAL ENGINEER
Mee Shing Owyang
No. 24960
Exp. 12/31/07
CIVIL
STATE OF CALIFORNIA

CONTRACT NO. 04-0120R4

CONTRACT CHANGE ORDER NO 69S1

SHEET 6 OF 113

CONTRACT CHANGE ORDER NO 69S1

SHEET 7 OF 115

SCOPE OF WORK (CCO No. 69S1) 6
SECTION 5. GENERAL 7
SECTION 5-1. MISCELLANEOUS 7
5-1.01 WORKING DRAWINGS 7
5-1.013 LINES AND GRADES 9
5-1.015 LABORATORY 10
5-1.019 COST REDUCTION INCENTIVE 11
5-1.02 LABOR NONDISCRIMINATION 12
5-1.03 PUBLIC SAFETY 13
5-1.04 TESTING 15
5-1.05 REMOVAL OF ASBESTOS AND HAZARDOUS SUBSTANCES 16
5-1.06 PAYMENTS 17
5-1.07 PROJECT INFORMATION 18
5-1.08 AREAS FOR CONTRACTOR'S USE 18
5-1.09 UTILITIES 19
5-1.10 SANITARY PROVISIONS 19
5-1.11 BRIDGE TOLLS 19
5-1.12 PERMITS AND LICENSES 19
5-1.13 SOUND CONTROL REQUIREMENTS 21
SECTION 6. (BLANK) 22
SECTION 7. (BLANK) 22
SECTION 8. MATERIALS 22
SECTION 8-1. MISCELLANEOUS 22
8-1.01 SUBSTITUTION OF NON-METRIC MATERIALS AND PRODUCTS 23
SECTION 8-2. CONCRETE 31
8-2.01 PORTLAND CEMENT CONCRETE 31
8-2.02 CORROSION CONTROL FOR PORTLAND CEMENT CONCRETE 32
SECTION 8-3. WELDING 34
8-3.01 WELDING 34
SECTION 9. (BLANK) 42
SECTION 10. CONSTRUCTION DETAILS 42
SECTION 10-1. GENERAL 42
10-1.01 ORDER OF WORK 43
10-1.09 TEMPORARY RAILING 44
10-1.10 EXISTING HIGHWAY FACILITIES 45
10-1.11 CLEARING AND GRUBBING 49
10-1.12 EARTHWORK 49
10-1.13 HEALTH AND SAFETY PLAN 51
10-1.14 AGGREGATE SUBBASE 51
10-1.15 AGGREGATE BASE 52
10-1.16 ASPHALT CONCRETE 53
10-1.17 REINFORCEMENT 55
10-1.18 SANITARY SEWER LIFT STATION 55
10-1.19 SEWER PIPE 62
10-1.20 SEWER MANHOLE 78
10-1.21 SLOPE PROTECTION 86
10-1.22 MISCELLANEOUS IRON AND STEEL 87
10-1.23 CHAIN LINK FENCE 88

10-1.24 METAL BEAM GUARD RAILING 89
SECTION 10-2. (BLANK) 92
SECTION 10-3. SIGNALS, LIGHTING AND ELECTRICAL SYSTEMS 92
10-3.01 DESCRIPTION 92
10-3.02 STANDARDS, STEEL PEDESTALS, AND POSTS 93
10-3.03 CONDUIT 94
10-3.04 CONDUCTORS AND WIRING 95
10-3.05 BONDING AND GROUNDING 96
10-3.06 SERVICE 97
10-3.07 PAYMENT 98
SECTION 11. (BLANK) 99

SCOPE OF WORK (CCO No. 69S1)

Scope of the work for Contract Change Order No. 69S1 for construction consists of the following facilities:

1. Sanitary sewer lift station as shown on the plans.
2. Demolish existing sewer pump station as shown on the plans.
3. Construct Pump station access road as shown on the plans.
4. Site grading as shown on the plans.
5. Chain link fence and gates as shown on the plans.
6. Relocate sanitary sewer lines as shown on the plans.
7. Remove sanitary sewer manhole as shown on the plans.
8. Relocate water line as shown on the plans.
9. Construct AC Dike and MBGR as shown on the plans.

CONTRACT NO. 04-012024

CONTRACT CHANGE ORDER NO 69S1

SHEET 8 OF 115

SECTION 5. GENERAL

SECTION 5-1. MISCELLANEOUS

5-1.01 WORKING DRAWINGS

Working drawings shall conform to the requirements in Section 5-1.02, "Plans and Working Drawings," of the Standard Specifications and these special provisions. Working drawings shall include supplements and calculations that are in addition to drawings.

Working drawings shall be submitted to the following location:

California Department of Transportation
Office of the Resident Engineer, Contract 04-0120R4
280 Beale Street
San Francisco, CA 94105

Working drawings shall conform to the following:

A. For initial review, 6 sets of the working drawings shall be submitted. After the Engineer has determined that a submittal is complete, 12 additional sets shall be submitted.

B. Drawings shall be 559 mm x 864 mm or 279 mm x 432 mm in size. Supplements and calculations shall be 216 mm x 280 mm in size.

C. For drawings, text size shall be nominally 2.8 mm high minimum. For supplement and calculations, font size shall be 12 minimum.

D. Text and details shall be legible and suitable for photocopying and reduction.

E. In addition to the paper copies of the working drawings, electronic files shall be submitted. Electronic files shall be portable document format (PDF) and shall be submitted on compact disk (CD) media. Each plan shall be a separate PDF file on the CD. The CD shall contain an index consisting of the file names and a description of the corresponding file contents. The files shall be listed in the sequence of : 1) index, 2) drawings, 3) supplement, and 4) calculations.

F. Microfilms are required for approved shop drawings and shall be only a 24x reduction. The edge of the corrected original tracing image shall be clearly visible and visually parallel with the edges of the page. A clear, legible symbol shall be provided on the upper left side of each page to show the amount of reduction, and a horizontal and vertical scale shall be provided on each reduced print to facilitate enlargement to original scale.

G. At the completion of the contract, one compiled set of all approved working drawings (in electronic form and including all corrections and revisions) shall be furnished to the Engineer. The index shall be the first file on the CD.

Working drawings shall be stamped and signed by an engineer who is registered as a Civil Engineer in the State of California. When independently checked calculations are required, these calculations shall be stamped and signed by another engineer who is registered as a Civil Engineer in the State of California.

Working drawings shall be submitted sufficiently in advance of the start of the affected work to allow time for review by the Engineer and correction by the Contractor of the drawings

without delaying the work. The time shall be proportional to the complexity of the work, but in no case shall the time be less than the review time as specified for the type of working drawings as required elsewhere in these special provisions.

The Engineer will review a working drawing submittal for completeness. Within ten working days of the receipt of the submittal by the Engineer, the Engineer will notify the Contractor in writing if the submittal is determined to be incomplete. If the submittal is determined to be incomplete, ten working days from the day of receipt shall be allowed for approval and return for correction of each submittal or resubmittal, unless otherwise specified in these special provisions.

Should the Engineer fail to review the complete working drawing submittal within the time specified, and the Contractor's controlling operation on the critical path is delayed (as determined by the Engineer) by the Engineer's failure to review within the time specified, an extension of time will be granted in conformance with the provisions in Section 8-1.07, "Liquidated Damages," of the Standard Specifications and in "Progress Schedule (Critical Path Method)," of these special provisions. Should the Engineer fail to review the complete working drawing submittal within the time specified, compensation, if any, will be made in accordance with Section 8-1.09, "Right of Way Delays," of the Standard Specifications, and "Time Related Overhead," of these special provisions.

CONTRACT NO. 04-612024

CONTRACT CHANGE ORDER NO 69151

SHEET 10 OF 115

5-1.013 LINES AND GRADES

Attention is directed to Section 5-1.07, "Lines and Grades," of the Standard Specifications.

Stakes or marks will be set by the Engineer in conformance with the requirements in Chapter 12, "Construction Surveys," of the Department's Surveys Manual.

5-1.015 LABORATORY

When a reference is made in the specifications to the "Laboratory," the reference shall mean Division of Engineering Services - Materials Engineering and Testing Services and Division of Engineering Services - Geotechnical Services of the Department of Transportation, or established laboratories of the various Districts of the Department, or other laboratories authorized by the Department to test materials and work involved in the contract. When a reference is made in the specifications to the "Transportation Laboratory," the reference shall mean Division of Engineering Services - Materials Engineering and Testing Services and Division of Engineering Services - Geotechnical Services, located at 5900 Folsom Boulevard, Sacramento, CA 95819, Telephone (916) 227-7000.

5-1.019 COST REDUCTION INCENTIVE

Attention is directed to Section 5-1.14, "Cost Reduction Incentive," of the Standard Specifications.

Prior to preparing a written cost reduction proposal, the Contractor shall request a meeting with the Engineer to discuss the proposal in concept. Items of discussion will also include permit issues, impact on other projects, impact on the project schedule, peer reviews, overall merit of the proposal, and review times required by the Department and other agencies.

If a cost reduction proposal submitted by the Contractor, and subsequently approved by the Engineer, provides for a reduction in contract time, 50 percent of that contract time reduction shall be credited to the State by reducing the contract working days, not including plant establishment. Attention is directed to "Beginning of Work, Time of Completion and Liquidated Damages" of these special provisions regarding the working days.

If a cost reduction proposal submitted by the Contractor, and subsequently approved by the Engineer, provides for a reduction in traffic congestion or avoids traffic congestion during construction, 60 percent of the estimated net savings in construction costs attributable to the cost reduction proposal will be paid to the Contractor. In addition to the requirements in Section 5-1.14, "Cost Reduction Incentive," of the Standard Specifications, the Contractor shall provide detailed comparisons of the traffic handling between the existing contract and the proposed change, and estimates of the traffic volumes and congestion.

CONTRACT NO. 04-0120R4

CONTRACT CHANGE ORDER NO 6957

SHEET 13 OF 115

5-1.02 LABOR NONDISCRIMINATION

Attention is directed to the following Notice that is required by Chapter 5 of Division 4 of Title 2, California Code of Regulations.

NOTICE OF REQUIREMENT FOR NONDISCRIMINATION PROGRAM

(GOV. CODE, SECTION 12990)

Your attention is called to the "Nondiscrimination Clause", set forth in Section 7-1.01A(4), "Labor Nondiscrimination," of the Standard Specifications, which is applicable to all nonexempt State contracts and subcontracts, and to the "Standard California Nondiscrimination Construction Contract Specifications" set forth therein. The specifications are applicable to all nonexempt State construction contracts and subcontracts of $5000 or more.

CONTRACT NO. 64-0120R4

CONTRACT CHANGE ORDER NO 6957

SHEET 14 OF 115

5-1.03 PUBLIC SAFETY

The Contractor shall provide for the safety of traffic and the public in conformance with the provisions in Section 7-1.09, "Public Safety," of the Standard Specifications and these special provisions.

The Contractor shall install temporary railing (Type K) between a lane open to public traffic and an excavation, obstacle or storage area when the following conditions exist:

A. Excavations—The near edge of the excavation is 3.6 m or less from the edge of the lane, except:

   1. Excavations covered with sheet steel or concrete covers of adequate thickness to prevent accidental entry by traffic or the public.
   2. Excavations less than 0.3-m deep.
   3. Trenches less than 0.3-m wide for irrigation pipe or electrical conduit, or excavations less than 0.3-m in diameter.
   4. Excavations parallel to the lane for the purpose of pavement widening or reconstruction.
   5. Excavations in side slopes, where the slope is steeper than 1:4 (vertical:horizontal).
   6. Excavations protected by existing barrier or railing.

B. Temporarily Unprotected Permanent Obstacles—The work includes the installation of a fixed obstacle together with a protective system, such as a sign structure together with protective railing, and the Contractor elects to install the obstacle prior to installing the protective system; or the Contractor, for the Contractor's convenience and with permission of the Engineer, removes a portion of an existing protective railing at an obstacle and does not replace such railing complete in place during the same day.

C. Storage Areas—Material or equipment is stored within 3.6 m of the lane and the storage is not otherwise prohibited by the provisions of the Standard Specifications and these special provisions.

The approach end of temporary railing (Type K), installed in conformance with the provisions in this section "Public Safety" and in Section 7-1.09, "Public Safety," of the Standard Specifications, shall be offset a minimum of 4.6 m from the edge of the traffic lane open to public traffic. The temporary railing shall be installed on a skew toward the edge of the traffic lane of not more than 0.3-m transversely to 3 m longitudinally with respect to the edge of the traffic lane. If the 4.6-m minimum offset cannot be achieved, the temporary railing shall be installed on the 10 to 1 skew to obtain the maximum available offset between the approach end of the railing and the edge of the traffic lane, and an array of temporary crash cushion modules shall be installed at the approach end of the temporary railing.

Except for installing, maintaining and removing traffic control devices, whenever work is performed or equipment is operated in the following work areas, the Contractor shall close the adjacent traffic lane unless otherwise provided in the Standard Specifications and these special provisions:

Approach Speed of Public Traffic (Posted Limit) (Kilometers Per Hour)	Work Areas
Over 72 (45 Miles Per Hour)	Within 1.8 m of a traffic lane but not on a traffic lane
56 to 72 (35 to 45 Miles Per Hour)	Within 0.9-m of a traffic lane but not on a traffic lane

The lane closure provisions of this section shall not apply if the work area is protected by permanent or temporary railing or barrier.

When traffic cones or delineators are used to delineate a temporary edge of a traffic lane, the line of cones or delineators shall be considered to be the edge of the traffic lane, however, the Contractor shall not reduce the width of an existing lane to less than 3 m without written approval from the Engineer.

When work is not in progress on a trench or other excavation that required closure of an adjacent lane, the traffic cones or portable delineators used for the lane closure shall be placed off of and adjacent to the edge of the traveled way. The spacing of the cones or delineators shall be not more than the spacing used for the lane closure.

Suspended loads or equipment shall not be moved nor positioned over public traffic or pedestrians.

Full compensation for conforming to the provisions in this section "Public Safety," including furnishing and installing temporary railing (Type K) and temporary crash cushion modules, shall be considered as included in the contract prices paid for the various items of work involved and no additional compensation will be allowed therefor.

5-1.04 TESTING

Testing of materials and work shall conform to the provisions in Section 6-3, "Testing," of the Standard Specifications and these special provisions.

Whenever the provisions of Section 6-3.01, "General," of the Standard Specifications refer to tests or testing, it shall mean tests to assure the quality and to determine the acceptability of the materials and work.

The Engineer will deduct the costs for testing of materials and work found to be unacceptable, as determined by the tests performed by the Department, and the costs for testing of material sources identified by the Contractor which are not used for the work, from moneys due or to become due to the Contractor. The amount deducted will be determined by the Engineer.

5-1.05 REMOVAL OF ASBESTOS AND HAZARDOUS SUBSTANCES

When the presence of asbestos or hazardous substances are not shown on the plans or indicated in the specifications and the Contractor encounters materials which the Contractor reasonably believes to be asbestos or a hazardous substance as defined in Section 25914.1 of the Health and Safety Code, and the asbestos or hazardous substance has not been rendered harmless, the Contractor may continue work in unaffected areas reasonably believed to be safe. The Contractor shall immediately cease work in the affected area and report the condition to the Engineer in writing.

In conformance with Section 25914.1 of the Health and Safety Code, removal of asbestos or hazardous substances including exploratory work to identify and determine the extent of the asbestos or hazardous substance will be performed by separate contract.

If delay of work in the area delays the current controlling operation, the delay will be considered a right of way delay and the Contractor will be compensated for the delay in conformance with the provisions in Section 8-1.09, "Right of Way Delays," of the Standard Specifications.

CONTRACT NO. 04-012024

CONTRACT CHANGE ORDER NO 6937

SHEET 16 OF 115

5-1.06 PAYMENTS

Attention is directed to Sections 9-1.06, "Partial Payments," and 9-1.07, "Payment After Acceptance," of the Standard Specifications and these special provisions.

For the purpose of making partial payments pursuant to Section 9-1.06, "Partial Payments," of the Standard Specifications, the amount set forth for the contract items of work hereinafter listed shall be deemed to be the maximum value of the contract item of work which will be recognized for progress payment purposes:

A. Clearing and Grubbing $ 21,000

After acceptance of the contract pursuant to the provisions in Section 7-1.17, "Acceptance of Contract," of the Standard Specifications, the amount, if any, payable for a contract item of work in excess of the maximum value for progress payment purposes hereinabove listed for the item, will be included for payment in the first estimate made after acceptance of the contract.

No partial payment will be made for any materials on hand which are furnished but not incorporated in the work.

5-1.07 PROJECT INFORMATION

The information in this section has been compiled specifically for this project and is made available for bidders and Contractors. Other information referenced in the Standard Specifications and these special provisions do not appear in this section. The information is subject to the conditions and limitations set forth in Section 2-1.03, "Examination of Plans, Specifications, Contract, and Site of Work," and Section 6-2, "Local Materials," of the Standard Specifications. Bidders and Contractors shall be responsible for knowing the procedures for obtaining information.

Cross sections are not available for this project.

The District Office in which the work is situated is located at 111 Grand Ave, Oakland CA 94612.

Plans of the existing bridges may be requested by fax from the Office of Structure Maintenance and Investigations, 1801 30th Street, Sacramento, CA, Fax (916) 227-8357.

Plans of the existing bridges available to bidders and Contractors are reproductions of the original contract plans, with significant changes noted, and working drawings, and do not necessarily show normal construction tolerances and variances. Where dimensions of new construction required by this contract are dependent on the dimensions of the existing bridges, the Contractor shall verify the controlling field dimensions and shall be responsible for adjusting dimensions of the work to fit existing conditions.

5-1.08 AREAS FOR CONTRACTOR'S USE

Attention is directed to the requirements specified in Section 7-1.19, "Rights in Land and Improvements," of the Standard Specifications, plans and these special provisions.

The highway right of way shall be used for purposes that are necessary to perform the required work. The Contractor shall not occupy the right of way, or allow others to occupy the right of way, for purposes which are not necessary to perform the required work.

The Contractor's attention is directed to "Cooperation" of these special provisions, and the Contractor shall use only the designated areas for Contractor's use as specified in this section, as shown on the plans, and as follows:

1. **Area PR**: is available for the contractor's use for the entire contract period except limited by the areas as defined on the contract plans and these special provisions. The Contractor shall permit access by other contractors as directed by the Engineer.
2. **Area FPR**: is primarily available to Contract 04-0120R4 until May 1, 2007. After May 1, 2007, area FPR shall be considered a part of area FP.
3. **Area FP**: is available for use by the 04-0120R4 contract until November 30, 2007. The area FP shall then be made available to the contractor constructing the YBI transition structures under contract 04-0120S4 until May 1, 2009.
4. **Area EF**: is primarily available to Contract 04-0120E4 until March 31, 2008, and then to this contract after that date. Prior to March 31, 2008, the Contractor shall coordinated any planned work in area EF with the Engineer and Contract 04-0120E4 contractor.
5. **AREA CE**: is designated for use by Contract 04-0120E4 until March 31, 2008. The Contractor shall have access through area CE to the work area at Pier W2. After

CONTRACT CHANGE ORDER NO 69531
SHEET 21 OF 115

March 31, 2008, the area CE becomes a part of the area provided to the yerba Buena Island Structures contractor on Contract 04-0120S4.

The Contractor shall maintain access to the Torpedo Factory area at the east end of Yerba Buena Island at all times during the contract. Access may be via the existing Torpedo Factory Road or other routing as approved by the Engineer.

No area is available within the contract limits for the exclusive use of the Contractor. However, temporary storage of equipment and materials on State property may be arranged with the Engineer, subject to the prior demands of State maintenance forces and to other contract requirements. Use of the Contractor's work areas and other State-owned property shall be at the Contractor's own risk. The State shall not be held liable for damage to or loss of materials or equipment located within these areas.

Toll plaza parking lots shall not be used for the Contractor's employees private vehicles and the Contractor's equipment and vehicles.

The Contractor shall remove the equipment, materials, and rubbish from the work areas and other State-owned property which the Contractor occupies and shall leave the areas in presentable condition, in conformance with the provisions in Section 4-1.02, "Final Clean Up," of the Standard Specifications.

The Contractor shall secure, at the Contractor's own expense, areas required for storage of plans, equipment, and materials, or for other purposes if sufficient area is not available to the Contractor within the contract limits.

5-1.09 UTILITIES

The Contractor shall make arrangements to obtain electrical power, water or compressed air or other utilities required for the Contractor's operations and shall make and maintain the necessary service connections at the Contractor's own expense.

5-1.10 SANITARY PROVISIONS

State sanitary facilities will not be available for use by the Contractor's employees.

5-1.11 BRIDGE TOLLS

Toll-free passage on the San Francisco-Oakland Bay Bridge will be granted only for cars, trucks and special construction equipment which are clearly marked on the exterior with the Contractor's identification and which are being operated by the Contractor exclusively for the project, and which are used for the purpose of transporting materials and workers directly to and from the project site.

5-1.12 PERMITS AND LICENSES

Attention is directed to Section 7-1.04, "Permits and Licenses," of the Standard Specifications and these special provisions.

The Department has obtained the permits and licenses from the following agencies for this project:

A. California Regional Water Quality Control Board (RWQCB)

B. U.S. Army Corps of Engineers (ACOE)
C. San Francisco Bay Conservation Development Commission (BCDC)
D. United States Coast Guard (USCG)
E. California Department of Fish and Game (CDFG)

These permits have been made available to the Contractor as part of the information handout for the 04-0120R4 Contract.

For updated versions of environmental permits, the Contractor shall visit the website:

www.biomitigation.org

Full compensation for conforming to the requirements in these permits and licenses shall be considered as included in the prices paid for the various contract items of work and no additional compensation will be allowed therefor.

5-1.13 SOUND CONTROL REQUIREMENTS

Sound control shall conform to the provisions in Section 7-1.011, "Sound Control Requirements," of the Standard Specifications and these special provisions.

The noise level from the Contractor's operations, between the hours of 7:00 p.m. and 7:00 a.m., shall not exceed 78 dBa at a distance of 15 m from the source. Impact type mechanical operations, such as pile-driving and jack-hammering, shall not be conducted between the hours of 7:00 pm to 7:00 am. This requirement shall not relieve the Contractor from responsibility for complying with local ordinances regulating noise level at all times.

The noise level requirement shall apply to the equipment on the job or related to the job, including but not limited to trucks, transit mixers or transient equipment that may or may not be owned by the Contractor. The use of loud sound signals shall be avoided in favor of light warnings except those required by safety laws for the protection of personnel.

Full compensation for conforming to the requirements of this section shall be considered as included in the prices paid for the various contract items of work involved and no additional compensation will be allowed therefor.

Noise monitoring activities will be conducted by the Department of Transportation. The Contractor shall coordinate with the Department of Transportation monitors and allow them access to noise monitoring locations.

SECTION 6. (BLANK)

SECTION 7. (BLANK)

SECTION 8. MATERIALS

SECTION 8-1. MISCELLANEOUS

CONTRACT NO. 04-012024

CONTRACT CHANGE ORDER NO 6951

SHEET 24 OF 115

8-1.01 SUBSTITUTION OF NON-METRIC MATERIALS AND PRODUCTS

Only materials and products conforming to the requirements of the specifications shall be incorporated in the work. When metric materials and products are not available, and when approved by the Engineer, and at no cost to the State, materials and products in the United States Standard Measures which are of equal quality and of the required properties and characteristics for the purpose intended, may be substituted for the equivalent metric materials and products, subject to the following provisions:

A. Materials and products shown on the plans or in the special provisions as being equivalent may be substituted for the metric materials and products specified or detailed on the plans.

B. Before other non-metric materials and products will be considered for use, the Contractor shall furnish, at the Contractor's expense, evidence satisfactory to the Engineer that the materials and products proposed for use are equal to or better than the materials and products specified or detailed on the plans. The burden of proof as to the quality and suitability of substitutions shall be upon the Contractor and the Contractor shall furnish necessary information as required by the Engineer. The Engineer will be the sole judge as to the quality and suitability of the substituted materials and products and the Engineer's decision will be final.

C. When the Contractor elects to substitute non-metric materials and products, including materials and products shown on the plans or in the special provisions as being equivalent, the list of sources of material specified in Section 6-1.01, "Source of Supply and Quality of Materials," of the Standard Specification shall include a list of substitutions to be made and contract items involved. In addition, for a change in design or details, the Contractor shall submit plans and working drawings in conformance with the provisions in Section 5-1.02, "Plans and Working Drawings," of the Standard Specifications. The plans and working drawings shall be submitted at least 7 days before the Contractor intends to begin the work involved.

Unless otherwise specified, the following substitutions of materials and products will be allowed:

CONTRACT NO. 04-012084

CONTRACT CHANGE ORDER NO 6951

SHEET 25 OF 115

SUBSTITUTION TABLE FOR PLAIN WIRE REINFORCEMENT
ASTM Designation: A 82

METRIC SIZE SHOWN ON THE PLANS mm^2	SIZE TO BE SUBSTITUTED $inch^2 \times 100$
MW9	W1.4
MW10	W1.6
MW13	W2.0
MW15	W2.3
MW19	W2.9
MW20	W3.1
MW22	W3.5
MW25	W3.9, except W3.5 in piles only
MW26	W4.0
MW30	W4.7
MW32	W5.0
MW35	W5.4
MW40	W6.2
MW45	W6.5
MW50	W7.8
MW55	W8.5, except W8.0 in piles only
MW60	W9.3
MW70	W10.9, except W11.0 in piles only
MW80	W12.4
MW90	W14.0
MW100	W15.5

SUBSTITUTION TABLE FOR BAR REINFORCEMENT

METRIC BAR DESIGNATION NUMBER[1] SHOWN ON THE PLANS	BAR DESIGNATION NUMBER[2] TO BE SUBSTITUTED
10	3
13	4
16	5
19	6
22	7
25	8
29	9
32	10
36	11
43	14
57	18

[1]Bar designation numbers approximate the number of millimeters of the nominal diameter of the bars.

[2]Bar numbers are based on the number of eighths of an inch included in the nominal diameter of the bars.

No adjustment will be required in spacing or total number of reinforcing bars due to a difference in minimum yield strength between metric and non-metric bars.

CONTRACT NO. 04-0120R4

CONTRACT CHANGE ORDER NO 16951

SHEET 26 OF 115.

SUBSTITUTION TABLE FOR SIZES OF:
(1) STEEL FASTENERS FOR GENERAL APPLICATIONS (ASTM Designation: A 307 or AASHTO Designation: M 314, Grade 36 or 55), and
(2) HIGH STRENGTH STEEL FASTENERS (ASTM Designation: A 325 or A 449)

METRIC SIZE SHOWN ON THE PLANS mm	SIZE TO BE SUBSTITUTED inch
6 or 6.35	1/4
8 or 7.94	5/16
10 or 9.52	3/8
11 or 11.11	7/16
13, 12.70, or M12	1/2
14 or 14.29	9/16
16, 15.88, or M16	5/8
19, 19.05, or M20	3/4
22, 22.22, or M22	7/8
24, 25, 25.40, or M24	1
29, 28.58, or M27	1-1/8
32, 31.75, or M30	1-1/4
35 or 34.93	1-3/8
38, 38.10, or M36	1-1/2
44 or 44.45	1-3/4
51 or 50.80	2
57 or 57.15	2-1/4
64 or 63.50	2-1/2
70 or 69.85	2-3/4
76 or 76.20	3
83 or 82.55	3-1/4
89 or 88.90	3-1/2
95 or 95.25	3-3/4
102 or 101.60	4

CONTRACT NO. 04-0120R4

CONTRACT CHANGE ORDER NO 6951

SHEET 27 OF 115

SUBSTITUTION TABLE FOR NOMINAL THICKNESS OF SHEET METAL

UNCOATED HOT AND COLD ROLLED SHEETS		HOT-DIPPED ZINC COATED SHEETS (GALVANIZED)	
METRIC THICKNESS SHOWN ON THE PLANS mm	GAGE TO BE SUBSTITUTED inch	METRIC THICKNESS SHOWN ON THE PLANS mm	GAGE TO BE SUBSTITUTED inch
7.94	0.3125	4.270	0.1681
6.07	0.2391	3.891	0.1532
5.69	0.2242	3.510	0.1382
5.31	0.2092	3.132	0.1233
4.94	0.1943	2.753	0.1084
4.55	0.1793	2.372	0.0934
4.18	0.1644	1.994	0.0785
3.80	0.1495	1.803	0.0710
3.42	0.1345	1.613	0.0635
3.04	0.1196	1.461	0.0575
2.66	0.1046	1.311	0.0516
2.28	0.0897	1.158	0.0456
1.90	0.0747	1.006 or 1.016	0.0396
1.71	0.0673	0.930	0.0366
1.52	0.0598	0.853	0.0336
1.37	0.0538	0.777	0.0306
1.21	0.0478	0.701	0.0276
1.06	0.0418	0.627	0.0247
0.91	0.0359	0.551	0.0217
0.84	0.0329	0.513	0.0202
0.76	0.0299	0.475	0.0187
0.68	0.0269	--------	--------
0.61	0.0239	--------	--------
0.53	0.0209	--------	--------
0.45	0.0179	--------	--------
0.42	0.0164	--------	--------
0.38	0.0149	--------	--------

CONTRACT NO. 04-012024

CONTRACT CHANGE ORDER NO 6951

SHEET 28 OF 115

SUBSTITUTION TABLE FOR WIRE

METRIC THICKNESS SHOWN ON THE PLANS mm	WIRE THICKNESS TO BE SUBSTITUTED inch	GAGE NO.
6.20	0.244	3
5.72	0.225	4
5.26	0.207	5
4.88	0.192	6
4.50	0.177	7
4.11	0.162	8
3.76	0.148	9
3.43	0.135	10
3.05	0.120	11
2.69	0.106	12
2.34	0.092	13
2.03	0.080	14
1.83	0.072	15
1.57	0.062	16
1.37	0.054	17
1.22	0.048	18
1.04	0.041	19
0.89	0.035	20

SUBSTITUTION TABLE FOR PIPE PILES

METRIC SIZE SHOWN ON THE PLANS mm x mm	SIZE TO BE SUBSTITUTED inch x inch
PP 360 x 4.55	NPS 14 x 0.179
PP 360 x 6.35	NPS 14 x 0.250
PP 360 x 9.53	NPS 14 x 0.375
PP 360 x 11.12	NPS 14 x 0.438
PP 406 x 12.70	NPS 16 x 0.500
PP 460 x T	NPS 18 x T"
PP 508 x T	NPS 20 x T"
PP 559 x T	NPS 22 x T"
PP 610 x T	NPS 24 x T"
PP 660 x T	NPS 26 x T"
PP 711 x T	NPS 28 x T"
PP 762 x T	NPS 30 x T"
PP 813 x T	NPS 32 x T"
PP 864 x T	NPS 34 x T"
PP 914 x T	NPS 36 x T"
PP 965 x T	NPS 38 x T"
PP 1016 x T	NPS 40 x T"
PP 1067 x T	NPS 42 x T"
PP 1118 x T	NPS 44 x T"
PP 1219 x T	NPS 48 x T"
PP 1524 x T	NPS 60 x T"

The thickness in millimeters (T) represents an exact conversion of the thickness in inches (T").

CONTRACT NO. 04-012024

CONTRACT CHANGE ORDER NO 10957

SHEET 29 OF 115

SUBSTITUTION TABLE FOR CIDH CONCRETE PILING

METRIC SIZE SHOWN ON THE PLANS	ACTUAL AUGER SIZE TO BE SUBSTITUTED inches
350 mm	14
400 mm	16
450 mm	18
600 mm	24
750 mm	30
900 mm	36
1.0 m	42
1.2 m	48
1.5 m	60
1.8 m	72
2.1 m	84
2.4 m	96
2.7 m	108
3.0 m	120
3.3 m	132
3.6 m	144
4.0 m	156

SUBSTITUTION TABLE FOR STRUCTURAL TIMBER AND LUMBER

METRIC MINIMUM DRESSED DRY, SHOWN ON THE PLANS mm x mm	METRIC MINIMUM DRESSED GREEN, SHOWN ON THE PLANS mm x mm	NOMINAL SIZE TO BE SUBSTITUTED inch x inch
19x89	20x90	1x4
38x89	40x90	2x4
64x89	65x90	3x4
89x89	90x90	4x4
140x140	143x143	6x6
140x184	143x190	6x8
184x184	190x190	8x8
235x235	241x241	10x10
286x286	292x292	12x12

SUBSTITUTION TABLE FOR NAILS AND SPIKES

METRIC COMMON NAIL, SHOWN ON THE PLANS Length, mm Diameter, mm	METRIC BOX NAIL, SHOWN ON THE PLANS Length, mm Diameter, mm	METRIC SPIKE, SHOWN ON THE PLANS Length, mm Diameter, mm	SIZE TO BE SUBSTITUTED Penny-weight
50.80 2.87	50.80 2.51	———	6d
63.50 3.33	63.50 2.87	———	8d
76.20 3.76	76.20 3.25	76.20 4.88	10d
82.55 3.76	82.55 3.25	82.55 4.88	12d
88.90 4.11	88.90 3.43	88.90 5.26	16d
101.60 4.88	101.60 3.76	101.60 5.72	20d
114.30 5.26	114.30 3.76	114.30 6.20	30d
127.00 5.72	127.00 4.11	127.00 6.68	40d
———	———	139.70 7.19	50d
———	———	152.40 7.19	60d

CONTRACT NO. 04-0120R4

CONTRACT CHANGE ORDER NO 6951

SHEET 31 OF 115

SUBSTITUTION TABLE FOR IRRIGATION COMPONENTS

METRIC WATER METERS, TRUCK LOADING STANDPIPES, VALVES, BACKFLOW PREVENTERS, FLOW SENSORS, WYE STRAINERS, FILTER ASSEMBLY UNITS, PIPE SUPPLY LINES, AND PIPE IRRIGATION SUPPLY LINES SHOWN ON THE PLANS DIAMETER NOMINAL (DN) mm	NOMINAL SIZE TO BE SUBSTITUTED inch
15	1/2
20	3/4
25	1
32	1-1/4
40	1-1/2
50	2
65	2-1/2
75	3
100	4
150	6
200	8
250	10
300	12
350	14
400	16

Unless otherwise specified, substitutions of United States Standard Measures standard structural shapes corresponding to the metric designations shown on the plans and in conformance with the requirements in ASTM Designation: A 6/A 6M, Annex 2, will be allowed.

CONTRACT NO. 04-012024

CONTRACT CHANGE ORDER NO 69151

SHEET 32 OF 115

SECTION 8-2. CONCRETE

8-2.01 PORTLAND CEMENT CONCRETE

Portland cement concrete shall conform to the provisions in Section 90, "Portland Cement Concrete," of the Standard Specifications and these special provisions.

References to Section 90-2.01, "Portland Cement," of the Standard Specifications shall mean Section 90-2.01, "Cement," of the Standard Specifications.

Mineral admixture shall be combined with cement in conformance with the provisions in Section 90-4.08, "Required Use of Mineral Admixtures," of the Standard Specifications for the concrete materials specified in Section 56-2, "Roadside Signs," of the Standard Specifications.

The requirements of Section 90-4.08, "Required Use of Mineral Admixture," of the Standard Specifications shall not apply to Section 19-3.025C, "Soil Cement Bedding," of the Standard Specifications.

The Department maintains a list of sources of fine and coarse aggregate that have been approved for use with a reduced amount of mineral admixture in the total amount of cementitious material to be used. A source of aggregate will be considered for addition to the approved list if the producer of the aggregate submits to the Transportation Laboratory certified test results from a qualified testing laboratory that verify the aggregate complies with the requirements. Prior to starting the testing, the aggregate test shall be registered with the Department. A registration number can be obtained by calling (916) 227-7228. The registration number shall be used as the identification for the aggregate sample in correspondence with the Department. Upon request, a split of the tested sample shall be provided to the Department. Approval of aggregate will depend upon compliance with the specifications, based on the certified test results submitted, together with any replicate testing the Department may elect to perform. Approval will expire 3 years from the date the most recent registered and evaluated sample was collected from the aggregate source.

Qualified testing laboratories shall conform to the following requirements:

A. Laboratories performing ASTM Designation: C 1293 shall participate in the Cement and Concrete Reference Laboratory (CCRL) Concrete Proficiency Sample Program and shall have received a score of 3 or better on all tests of the previous 2 sets of concrete samples.
B. Laboratories performing ASTM Designation: C 1260 shall participate in the Cement and Concrete Reference Laboratory (CCRL) Pozzolan Proficiency Sample Program and shall have received a score of 3 or better on the shrinkage and soundness tests of the previous 2 sets of pozzolan samples.

Aggregates on the list shall conform to one of the following requirements:

A. When the aggregate is tested in conformance with the requirements in California Test 554 and ASTM Designation: C 1293, the average expansion at one year shall be less than or equal to 0.040 percent; or
B. When the aggregate is tested in conformance with the requirements in California Test 554 and ASTM Designation: C 1260, the average of the expansion at 16 days shall be less than or equal to 0.15 percent.

CONTRACT NO. 04-0120124
CONTRACT CHANGE ORDER NO 6951
SHEET 34 OF 115

The amounts of cement and mineral admixture used in cementitious material shall be sufficient to satisfy the minimum cementitious material content requirements specified in Section 90-1.01, "Description," or Section 90-4.05, "Optional Use of Chemical Admixtures," of the Standard Specifications and shall conform to the following:

A. The minimum amount of cement shall not be less than 75 percent by mass of the specified minimum cementitious material content.
B. The minimum amount of mineral admixture to be combined with cement shall be determined using one of the following criteria:

   1. When the calcium oxide content of a mineral admixture is equal to or less than 2 percent by mass, the amount of mineral admixture shall not be less than 15 percent by mass of the total amount of cementitious material to be used in the mix.
   2. When the calcium oxide content of a mineral admixture is greater than 2 percent by mass, and any of the aggregates used are not listed on the approved list as specified in these special provisions, then the amount of mineral admixture shall not be less than 25 percent by mass of the total amount of cementitious material to be used in the mix.
   3. When the calcium oxide content of a mineral admixture is greater than 2 percent by mass and the fine and coarse aggregates are listed on the approved list as specified in these special provisions, then the amount of mineral admixture shall not be less than 15 percent by mass of the total amount of cementitious material to be used in the mix.
   4. When a mineral admixture that conforms to the provisions for silica fume in Section 90-2.04, "Admixture Materials," of the Standard Specifications is used, the amount of mineral admixture shall not be less than 10 percent by mass of the total amount of cementitious material to be used in the mix.
   5. When a mineral admixture that conforms to the provisions for silica fume in Section 90-2.04, "Admixture Materials," of the Standard Specifications is used and the fine and coarse aggregates are listed on the approved list as specified in these special provisions, then the amount of mineral admixture shall not be less than 7 percent by mass of the total amount of cementitious material to be used in the mix.

C. The total amount of mineral admixture shall not exceed 35 percent by mass of the total amount of cementitious material to be used in the mix. Where Section 90-1.01, "Description," of the Standard Specifications specifies a maximum cementitious content in kilograms per cubic meter, the total mass of cement and mineral admixture per cubic meter shall not exceed the specified maximum cementitious material content.

The Contractor will be permitted to use Type II/Type V portland cement with appropriate corrosion protection for concrete used in the manufacture of precast concrete members.

8-2.02 CORROSION CONTROL FOR PORTLAND CEMENT CONCRETE

Permanent structures with Portland cement concrete in contact with soil or rock including that utilized for sewer manhole and foundations are considered to be in corrosive environment and shall conform to the provisions in Section 90, "Portland Cement Concrete," of the Standard Specifications and these special provisions.

Cementitious material to be used in Portland cement concrete shall conform to the provisions for cement and mineral admixtures in Section 90-2, "Materials," of the Standard Specifications, and shall be a combination of "Type II/Type V" Portland cement and mineral admixture.

Concrete in corrosive environment shall contain not less than 400 kg of cementitious material per cubic meter.

No reduction in the cementitious material content specified or ordered, in conformance with the provisions in Section 90-4.05, "Optional Use of Chemical Admixtures," of the Standard Specifications, will be allowed for concrete in a corrosive environment.

Unless otherwise specified, for concrete in a corrosive environment, the amount of cement shall be 75 percent by mass, and the amount of mineral admixture to be combined with cement shall be 25 percent by mass, of the total amount of cementitious material to be used in the concrete mix. The calcium oxide content of mineral admixtures shall not exceed 10 percent.

Mineral admixture for concrete in a corrosive environment shall conform to ASTM Designation: C618 Class F or N.

The amount of free water used in concrete in a corrosive environment shall not exceed 160 kg/m3, plus 40 kg for each 100 kg of cementitious material in excess of 400 kg/m3.

Full compensation for conforming to the above requirement shall be considered as included in the contract prices for the various items of work and no additional compensation will be allowed therefor.

CONTRACT NO. 04-012084

CONTRACT CHANGE ORDER NO 69S1

SHEET 35 OF 115

SECTION 8-3. WELDING

8-3.01 WELDING

GENERAL

Flux core welding electrodes conforming to the requirements of AWS A5.20 E6XT-4 or E7XT-4 shall not be used to perform welding for this project.

Wherever reference is made to the following AWS welding codes in the Standard Specifications, on the plans, or in these special provisions, the year of adoption for these codes shall be as listed:

AWS Code	Year of Adoption
D1.1	2002
D1.4	1998
D1.5	2002
D1.6	1999

Requirements of the AWS welding codes shall apply unless specified otherwise in the Standard Specifications, on the plans, or in these special provisions. Wherever the abbreviation AWS is used, it shall be equivalent to the abbreviations ANSI/AWS or AASHTO/AWS.

Section 6.1.1.1 of AWS D1.5 is replaced with the following:

Quality Control (QC) shall be the responsibility of the Contractor. As a minimum, the Contractor shall perform inspection and testing of each weld joint prior to welding, during welding, and after welding as specified in this section and as necessary to ensure that materials and workmanship conform to the requirements of the contract documents.

Sections 6.1.3 through 6.1.4.3 of AWS D1.1, Section 7.1.2 of AWS D1.4, and Sections 6.1.1.2 through 6.1.3.3 of AWS D1.5 are replaced with the following:

The QC Inspector shall be the duly designated person who acts for and on behalf of the Contractor for inspection, testing, and quality related matters for all welding.

Quality Assurance (QA) is the prerogative of the Engineer. The QA Inspector is the duly designated person who acts for and on behalf of the Engineer.

The QC Inspector shall be responsible for quality control acceptance or rejection of materials and workmanship, and shall be currently certified as an AWS Certified Welding Inspector (CWI) in conformance with the requirements in AWS QC1, " Standard for AWS Certification of Welding Inspectors."

The QC Inspector may be assisted by an Assistant QC Inspector provided that this individual is currently certified as an AWS Certified Associate Welding Inspector (CAWI) in conformance with the requirements in AWS QC1, "Standard for AWS Certification of Welding Inspectors." The Assistant QC Inspector may perform inspection under the direct supervision of the QC Inspector provided the Assistant is always within visible and audible range of the QC Inspector. The QC Inspector shall be responsible for signing all reports and for determining if welded materials conform to workmanship and acceptance criteria. The ratio of QC Assistants to QC Inspectors shall not exceed 5 to 1.

When the term "Inspector" is used without further qualification, it shall refer to the QC Inspector.

CONTRACT CHANGE ORDER NO 6951
SHEET 37 OF 45

Section 6.14.6, "Personnel Qualification," of AWS D1.1, Section 7.8, "Personnel Qualification," of AWS D1.4, and Section 6.1.3.4, "Personnel Qualification," of AWS D1.5 are replaced with the following:

Personnel performing nondestructive testing (NDT) shall be qualified and certified in conformance with the requirements of the American Society for Nondestructive Testing (ASNT) Recommended Practice No. SNT-TC-1A and the Written Practice of the NDT firm. The Written Practice of the NDT firm shall meet or exceed the guidelines of the ASNT Recommended Practice No. SNT-TC-1A. Individuals who perform NDT, review the results, and prepare the written reports shall be either:

A. Certified NDT Level II technicians, or;
B. Level III technicians who hold a current ASNT Level III certificate in that discipline and are authorized and certified to perform the work of Level II technicians.

Section 6.5.4 of AWS D1.5 is replaced with the following:

The QC Inspector shall inspect and approve each joint preparation, assembly practice, welding technique, joint fit-up, and the performance of each welder, welding operator, and tack welder to make certain that the applicable requirements of this code and the approved Welding Procedure Specification (WPS) are met. The QC Inspector shall examine the work to make certain that it meets the requirements of Sections 3 and 6.26. The size and contour of all welds shall be measured using suitable gages. Visual inspection for cracks in welds and base metal, and for other discontinuities should be aided by strong light magnifiers, or such other devices as may be helpful. Acceptance criteria different from those specified in this code may be used when approved by the Engineer.

Section 6.6.5, "Nonspecified NDT Other than Visual," of AWS D1.1, Section 6.6.5 of AWS D1.4 and Section 6.6.5 of AWS D1.5 shall not apply.

For any welding, the Engineer may direct the Contractor to perform NDT that is in addition to the visual inspection or NDT specified in the AWS or other specified welding codes, in the Standard Specifications, or in these special provisions. Additional NDT required by the Engineer will be paid for as extra work as provided in Section 4-1.03D, "Extra Work," of the Standard Specifications. Should any welding deficiencies be discovered by this additional NDT, all costs associated with the repair of the deficient area, including NDT of the weld and of the weld repair, and any delays caused by the repair, shall be at the Contractor's expense.

Repair work to correct welding deficiencies discovered by visual inspection or NDT, or by additional NDT directed or performed by the Engineer, and any associated delays or expenses caused to the Contractor by performing these repairs, shall be at the Contractor's expense.

The Engineer shall have the authority to verify the qualifications or certifications of any welder, QC Inspector, or NDT personnel to specified levels by retests or other means approved by the Engineer.

Continuous inspection shall be provided when any welding is being performed. Continuous inspection, as a minimum, shall include having a QC Inspector within such close proximity of all welders or welding operators so that inspections by the QC Inspector of each welding operation at each welding location shall not lapse for a period exceeding 30 minutes.

Inspection and approval of all joint preparations, assembly practices, joint fit-ups, welding techniques, and the performance of each welder, welding operator, and tack welder shall be documented by the QC Inspector on a daily basis for each day welding is performed. For each

CONTRACT CHANGE ORDER NO 10851
SHEET 38 OF 115

inspection, including fit-up, Welding Procedure Specification (WPS) verification, and final weld inspection, the QC Inspector shall confirm and document compliance with the requirements of the AWS or other specified code criteria and the requirements of these special provisions on all welded joints before welding, during welding, and after the completion of each weld.

When joint weld details that are not prequalified to the details of Section 3 of AWS D1.1 or to the details of Figure 2.4 or 2.5 of AWS D1.5 are proposed for use in the work, the joint details, their intended locations, and the proposed welding parameters and essential variables, will be approved by the Engineer. The Engineer shall have 2 weeks to complete the review of the proposed joint detail locations. In the event the Engineer fails to complete the review within the time allowed, and if, in the opinion of the Engineer, completion of the work is delayed or interfered with by reason of the Engineer's delay in completing the review, the Contractor will be compensated for any resulting loss, and an extension of time will be granted, in the same manner as provided for in Section 8-1.09, "Right of Way Delays," of the Standard Specifications. Upon approval of the proposed joint detail locations and qualification of the proposed joint details, welders and welding operators using these details shall perform a qualification test plate using the WPS variables and the joint detail to be used in production. The test plate shall have the maximum thickness to be used in production and a minimum length of 180 mm and minimum finish welded width 460 mm. The test plate shall be mechanically and radiographically tested. Mechanical and radiographic testing and acceptance criteria shall be as specified in the applicable AWS codes.

In addition to the requirements specified in the applicable code, the period of effectiveness for a welder's or welding operator's qualification shall be a maximum of 3 years for the same weld process, welding position, and weld type. If production welding will be performed without gas shielding, then qualification shall also be without gas shielding. Excluding welding of fracture critical members, a valid qualification at the beginning of work on a contract will be acceptable for the entire period of the contract, as long as the welder's or welding operator's work remains satisfactory.

The Engineer will witness all qualification tests for WPSs that were not previously approved by the Department. An approved independent third party will witness the qualification tests for welders or welding operators. The independent third party shall be a current CWI and shall not be employed by the contractor performing the welding. The Engineer shall have 2 weeks to review the qualifications and copy of the current certification of the independent third party. In the event the Engineer fails to complete the review within the time allowed, and if, in the opinion of the Engineer, completion of the work is delayed or interfered with by reason of the Engineer's delay in completing the review, the Contractor will be compensated for any resulting loss, and an extension of time will be granted, in the same manner as provided for in Section 8-1.09, "Right of Way Delays," of the Standard Specifications. The Contractor shall notify the Engineer one week prior to performing any qualification tests. Witnessing of qualification tests by the Engineer shall not constitute approval of the intended joint locations, welding parameters, or essential variables.

In addition to the requirements of AWS D1.5 Section 5.12 or 5.13, welding procedures qualification, for work welded in conformance with that code, shall conform to the following requirements:

A. Unless considered prequalified, fillet welds, including reinforcing fillet welds, shall be qualified in each position. The fillet weld soundness test shall be conducted using the essential variables of the WPS as established by the Procedure Qualification Record (PQR.)

CONTRACT CHANGE ORDER NO 6951
SHEET 39 OF 115

B. For qualification of joints that do not conform to Figures 2.4 and 2.5 of AWS D1.5, two WPS qualification tests are required. The tests conforming to AWS D1.5 Section 5.13 shall be conducted using both Figure 5.1 and Figure 5.3. The test conforming to Figure 5.3 shall be conducted using the same welding electrical parameters that were established for the test conducted conforming to Figure 5.1.

C. The travel speed, current, and voltage values that are used for tests conducted per AWS D1.5 Section 5.12 or 5.13 shall be consistent for each weld joint, and shall in no case vary by more than 10 percent for travel speed, 10 percent for current, and 7 percent for voltage.

D. For a WPS qualified in conformance with AWS D1.5 Section 5.13, the values to be used for calculating ranges for current and voltage shall be based on the average of all weld passes made in the test. Heat input shall be calculated using the average of current and voltage of all weld passes made in the test for a WPS qualified in conformance with Section 5.12 or 5.13.

E. To qualify for unlimited material thickness, two qualification tests are required for WPSs utilized for welding material thicknesses greater than 38 mm. One test shall be conducted using 20-mm thick test plates, and one test shall be conducted using test plates with a thickness between 38 mm and 50 mm. Two maximum heat input tests may be conducted for unlimited thickness qualification.

F. Macroetch tests are required for WPS qualification tests, and acceptance shall be per AWS D1.5 Section 5.19.3.

G. When a weld joint is to be made using a combination of qualified WPSs, each process shall be qualified separately.

H. When a weld joint is to be made using a combination of qualified and prequalified processes, the WPS shall reflect both processes and the limitations of essential variables, including weld bead placement, for both processes.

I. Prior to preparing mechanical test specimens, the PQR welds shall be inspected by visual and radiographic tests. Backing bar shall be 75 mm in width and shall remain in place during NDT testing. Results of the visual and radiographic tests shall comply with AWS D1.5 Section 6.26.2, excluding Section 6.26.2.2. Test plates that do not comply with both tests shall not be used.

WELDING QUALITY CONTROL

Welding quality control shall conform to the requirements in the AWS or other specified welding codes, the Standard Specifications, and these special provisions.

Unless otherwise specified, welding quality control shall apply when any work is welded in conformance with the provisions in Section 49, "Piling," Section 52, "Reinforcement," Section 55, "Steel Structures," or Section 75-1.035, "Bridge Joint Restrainer Units," of the Standard Specifications.

The welding of fracture critical members (FCMs) shall conform to the provisions specified in the Fracture Control Plan (FCP) and herein.

The Contractor shall designate in writing a welding Quality Control Manager (QCM). The QCM shall be responsible directly to the Contractor for the quality of welding, including materials and workmanship, performed by the Contractor and subcontractors.

The QCM shall be the sole individual responsible to the Contractor for submitting, receiving, reviewing, and approving all correspondence, required submittals, and reports to and from the Engineer. The QCM shall be a registered professional engineer or shall be currently certified as a CWI or a CAWI.

CONTRACT NO. _____ CONTRACT CHANGE ORDER NO 69451
SHEET 40 OF 115

The QCM shall not be employed or compensated by any subcontractor, or by other persons or entities hired by subcontractors, who will provide other services or materials for the project. The QCM may be an employee of the Contractor.

Welding inspection personnel or NDT firms to be used in the work shall not be employed or compensated by any subcontractor, or by other persons or entities hired by subcontractors, who will provide other services or materials for the project, except for the following conditions:

A. The work is welded in conformance with AWS D1.5 and is performed at a permanent fabrication or manufacturing facility which is certified under the AISC Quality Certification Program, Category Cbr, Major Steel Bridges and Fracture Critical endorsement F.
B. The welding is performed on pipe pile material at a permanent pipe manufacturing facility authorized to apply the American Petroleum Institute (API) monogram for API 5L pipe.

For welding performed at such facilities, the inspection personnel or NDT firms may be employed or compensated by the facility performing the welding.

Prior to submitting the Welding Quality Control Plan (WQCP) required herein, a pre-welding meeting between the Engineer, the Contractor's QCM, and a representative from each entity performing welding or inspection for this project, shall be held to discuss the requirements for the WQCP.

The Contractor shall submit to the Engineer, in conformance with the provisions in Section 5-1.02, "Plans and Working Drawings," of the Standard Specifications, 2 copies of a separate WQCP for each subcontractor or supplier for each item of work for which welding is to be performed.

The Contractor shall allow the Engineer 2 weeks to review the WQCP submittal after a complete plan has been received. No welding shall be performed until the WQCP is approved in writing by the Engineer. In the event the Engineer fails to complete the review within the time allowed, and if, in the opinion of the Engineer, completion of the work is delayed or interfered with by reason of the Engineer's delay in completing the review, the Contractor will be compensated for any resulting loss, and an extension of time will be granted, in the same manner as provided for in Section 8-1.09, "Right of Way Delays," of the Standard Specifications.

An amended WQCP or any addendum to the approved WQCP shall be submitted to, and approved in writing by the Engineer, for proposed revisions to the approved WQCP. An amended WQCP or addendum will be required for revisions to the WQCP, including but not limited to a revised WPS; additional welders; changes in NDT firms, QC, or NDT personnel or procedures; or updated systems for tracking and identifying welds. The Engineer shall have 1 week to complete the review of the amended WQCP or addendum. Work affected by the proposed revisions shall not be performed until the amended WQCP or addendum has been approved. In the event the Engineer fails to complete the review within the time allowed, and if, in the opinion of the Engineer, completion of the work is delayed or interfered with by reason of the Engineer's delay in completing the review, the Contractor will be compensated for any resulting loss, and an extension of time will be granted, in the same manner as provided for in Section 8-1.09, "Right of Way Delays," of the Standard Specifications.

Information regarding the contents, format, and organization of a WQCP, is available at the Transportation Laboratory or the following website:

http://www.dot.ca.gov/hq/esc/Translab/smbresources.htm

CONTRACT NO. [illegible]
CONTRACT CHANGE ORDER NO 9921
SHEET 41 OF 115

After final approval of the WQCP, amended WQCP, or addendum, the Contractor shall submit 7 copies to the Engineer of the approved documents. A copy of the Engineer approved document shall be available at each location where welding is to be performed.

A daily production log for welding shall be kept for each day that welding is performed. The log shall clearly indicate the locations of all welding. The log shall include the welders' names, amount of welding performed, any problems or deficiencies discovered, and any testing or repair work performed, at each location. The daily report from each QC Inspector shall also be included in the log.

The following items shall be included in a Welding Report that is to be submitted to the Engineer within 10 days following the performance of any welding:

A. Reports of all visual weld inspections and NDT.
B. Radiographs and radiographic reports, and other required NDT reports.
C. Documentation that the Contractor has evaluated all radiographs and other nondestructive tests and corrected all rejectable deficiencies, and all repaired welds have been reexamined by the required NDT and found acceptable.
D. Daily production log.

The following information shall be clearly written on the outside of radiographic envelopes: name of the QCM, name of the nondestructive testing firm, name of the radiographer, date, contract number, complete part description, and all included weld numbers or a report number, as detailed in the WQCP. In addition, all innerleaves shall have clearly written on them the part description and all included weld numbers, as detailed in the WQCP.

Reports regarding NDT shall be signed by both the NDT technician and the person that performed the review, and then submitted directly to the QCM for review and signature prior to submittal to the Engineer. Corresponding names shall be clearly printed or typewritten next to all signatures.

The Engineer will review the Welding Report to determine if the Contractor is in conformance with the WQCP. Unless otherwise specified, the Engineer shall be allowed 10 days to review the report and respond in writing after a complete Welding Report has been received. Prior to receiving notification from the Engineer of the Contractor's conformance with the WQCP, the Contractor may encase in concrete or cover welds for which a Welding Report has been submitted. However, should the Contractor elect to encase or cover those welds prior to receiving notification from the Engineer, it is expressly understood that the Contractor shall not be relieved of the responsibility for incorporating material in the work that conforms to the requirements of the plans and specifications. Material not conforming to these requirements will be subject to rejection. Should the Contractor elect to wait to encase or cover welds pending notification by the Engineer, and in the event the Engineer fails to complete the review within the time allowed, and if, in the opinion of the Engineer, completion of the work is delayed or interfered with by reason of the Engineer's delay in completing the review, the Contractor will be compensated for any resulting loss, and an extension of time will be granted, in the same manner as provided for in Section 8-1.09, "Right of Way Delays," of the Standard Specifications.

The QC Inspector shall provide reports to the QCM on a daily basis for each day that welding is performed.

Except for noncritical weld repairs, the Engineer shall be notified immediately in writing when welding problems, deficiencies, base metal repairs, or any other type of repairs not submitted in the WQCP are discovered, and also of the proposed repair procedures to correct them. The Contractor shall allow the Engineer one week to review these procedures. No remedial work shall begin until the repair procedures are approved in writing by the Engineer. In

the event the Engineer fails to complete the review within the time allowed, and if, in the opinion of the Engineer, completion of the work is delayed or interfered with by reason of the Engineer's delay in completing the review, the Contractor will be compensated for any resulting loss, and an extension of time will be granted, in the same manner as provided for in Section 8-1.09, "Right of Way Delays," of the Standard Specifications.

The QCM shall sign and furnish to the Engineer, a Certificate of Compliance in conformance with the provisions in Section 6-1.07, "Certificates of Compliance," of the Standard Specifications for each item of work for which welding was performed. The certificate shall state that all of the materials and workmanship incorporated in the work, and all required tests and inspections of this work, have been performed in conformance with the details shown on the plans, the Standard Specifications, and these special provisions.

CONTRACT NO. 04-012024

CONTRACT CHANGE ORDER NO 6951

SHEET 42 OF 115

PAYMENT

Full compensation for conforming to the requirements of "Welding" shall be considered as included in the contract prices paid for the various items of work involved and no additional compensation will be allowed therefor.

CONTRACT NO. 04-012024

CONTRACT CHANGE ORDER NO 6951

SHEET 43 OF 115

SECTION 9. (BLANK)

SECTION 10. CONSTRUCTION DETAILS

SECTION 10-1. GENERAL

CONTRACT NO. 04-012024

CONTRACT CHANGE ORDER NO 6951

SHEET 44 OF 115

10-1.01 ORDER OF WORK

Order of work shall conform to the provisions in Section 5-1.05, "Order of Work," of the Standard Specifications and these special provisions.

Contractor shall provide specifications and detailed shop drawings to the Engineer for the proposed sewer work, including the pipe manufacturer's names and product identification, and details for the type and location of all fittings, joints and connections to structures. The new manhole and pump shall be installed before the demolition of the existing pump station and manhole to minimize the down time of the facility.

CONTRACT NO. 04-012024

CONTRACT CHANGE ORDER NO 6951

SHEET 45 OF 115

10-1.09 TEMPORARY RAILING

Temporary railing (Type K) shall be placed as shown on the plans, as specified in the Standard Specifications or these special provisions or where ordered by the Engineer and shall conform to the provisions in Section 12, "Construction Area Traffic Control Devices," of the Standard Specifications and these special provisions.

Reflectors on temporary railing (Type K) shall conform to the provisions in "Prequalified and Tested Signing and Delineation Materials" of these special provisions.

Temporary railing (Type K) shall conform to the details shown on Standard Plan T3. Temporary railing (Type K) fabricated prior to January 1, 1993, and conforming to 1988 Standard Plan B11-30 may be used, provided the fabrication date is printed on the required Certificate of Compliance.

Attention is directed to "Public Safety" and "Order of Work" of these special provisions.

Temporary railing (Type K) placed in conformance with the provisions in "Public Safety" of these special provisions will be neither measured nor paid for.

CONTRACT NO. 04-012024

CONTRACT CHANGE ORDER NO 1

SHEET 46 OF 115

10-1.10 EXISTING HIGHWAY FACILITIES

The work performed in connection with various existing highway facilities shall conform to the provisions in Section 15, "Existing Highway Facilities," of the Standard Specifications and these special provisions.

CONTRACT NO. 04-0120R4

CONTRACT CHANGE ORDER NO 6951

SHEET 47 OF 115

REMOVE SEWER MANHOLE

Existing manholes, at the locations shown on the plans as remove or to be demolished, shall be removed and disposed of.

Removed frames and covers shall be disposed of.

The contract unit price paid for remove sewer manhole shall include full compensation for furnishing all labor, materials, tools, equipment, and incidentals and for doing all work involved in removing manhole complete in place, including concrete base, pipe risers, as shown on the plans, as specified in the Standard Specifications and these special provisions, and as directed by the engineer.

CONTRACT NO. 04-012024

CONTRACT CHANGE ORDER NO 6957

SHEET 46 OF 115

REMOVE CHAIN LINK FENCE

Existing chain link fence, including post footings, at the locations shown on the plans, shall be removed and disposed of.

Full compensation for removing and disposing of excess fence shall be considered as included in the contract price paid per meter for remove chain link fence and no separate payment will be made therefor.

REMOVE PIPE LINE

Existing water mains, and sewers, where shown on the plans to be removed, shall be removed and disposed of. Resulting openings into existing structures that are to remain in place shall be plugged with commercial quality concrete containing not less than 300 kg of cement per cubic meter.

Full compensation for concrete plugs, pipe removal, structure excavation, and backfill (including sand, controlled low strength material or slurry cement backfill) shall be considered as included in the contract unit price paid for remove water mains, and sewers and no additional compensation will be allowed therefor.

DEMOLISH PUMP STATION

This work shall consist of demolition and disposal of the existing pump station as shown on the plans, as specified in these special provisions, and as directed by the Engineer.

Scope of Work

The Contractor and/or subcontractors shall be properly licensed in accordance with the laws of the State of California and shall possess a Class C-21 license, CAL-OSHA permit and a Hazardous Substance Removal Certificate (HAZ) if any hazardous substances are discovered and the discovery requires removal. The Contractor shall provide all labor, equipment, supplies, permits and materials necessary to remove and demolish commercial structure, and abate all hazardous materials, according to all environmental laws and regulations. The work shall be done in accordance with all city and/or county codes/regulations. The structures are to be demolished and removed out of the State right of way.

The extent of demolition and disposal work shall consist of demolishing and removing structures, foundations, footings and other improvements including, but not limited to, the removal of siding, concrete blocks, plants, shrubs, trees, fences, walls, decks, sheds, doors and windows, concrete tanks, capping of sewer lines, slabs, stairs and landings, loading docks, steps, footings, foundations, pipe, brick, flatwork, plaster, lumber, wood splinters, trash, debris, glass, and abate all friable and non-friable asbestos and lead paint, according to all environmental laws and regulations. The Contractor shall also ensure that the proper notifications be made to the respective utility companies for the removal of meters or the disconnecting, capping or sealing, and abandoning in place of all site utilities. All demolished items shall be removed and legally disposed of outside of the State right of way, unless indicated to be salvaged or recycled by the Engineer.

Prior to the demolition work, the Contractor shall submit a schedule of pump station demolition activities to the Engineer for approval. The schedule shall indicate the following:

1. Proper Notification, time frames
2. Detailed sequence of demolition and removal work, with starting and ending dates for each.
3. Interruption of utility services.
4. Coordination for shutoff, capping, and continuation of utility services.
5. Locations of temporary protection

Backfill

The Contractor shall take all measures necessary to protect the public from basement excavations, holes, or vertical drops exposed or produced by his or her operations. The Contractor shall backfill such excavations, holes, or drops. Backfill shall be made with clean earth consisting of alluvium, decomposed granite, loam or sand. No material containing adobe or other substances, which would swell or contract with the addition of water or containing debris or large rocks will be accepted. Backfill within the limits of the State right of way shall be completed to the surface of the ground and unless otherwise specified, shall be placed in horizontal uniform layers not to exceed 20 cm in thickness before compaction.

Concrete & Debris Removal

The Contractor shall remove and dispose of all concrete, including concrete footings, 1 m below adjoining grade, flatwork , and miscellaneous rubble. Likewise, all brick, plaster, lumber, wood splinters and other debris including shrubs shall be removed from the site and disposed of by the Contractor.

Items to be Salvaged

The existing Flygt pump and Paco pump in TIS041 shall be salvaged and returned to SFPUC/WWE. The check valves shall also be salvaged and returned to SFPUC/WWE. The Engineer shall contact Kris Kilgore (415-648-6882 x1323), or Vic Zorzynski (415-274-0333) of the SFPUC/WWE once the salvaged items are removed from the existing pump station.

Payment

The contract unit price paid to demolish the pump station shall include full compensation for furnishing all labor, materials, temporary facilities, backfill, salvaging existing pumps and valves, safety measures, tools, equipment, and incidentals, and for performing all the work involved in demolition and removal of the pump station as shown on the plans, as specified in these special provisions, and as directed by the Engineer.

CONTRACT NO. 04-012084

CONTRACT CHANGE ORDER NO 6951

SHEET 50 OF 115

10-1.11 CLEARING AND GRUBBING

Clearing and grubbing shall conform to the provisions in Section 16, "Clearing and Grubbing," of the Standard Specifications and these special provisions.

Vegetation shall be cleared and grubbed only within the excavation and embankment slope lines.

At locations where there is no grading adjacent to a bridge or other structure, clearing and grubbing of vegetation shall be limited to 1.5 m outside the physical limits of the bridge or structure.

Existing vegetation outside the areas to be cleared and grubbed shall be protected from injury or damage resulting from the Contractor's operations.

Activities controlled by the Contractor, except cleanup or other required work, shall be confined within the graded areas of the roadway.

Nothing herein shall be construed as relieving the Contractor of the Contractor's responsibility for final cleanup of the highway as provided in Section 4-1.02, "Final Cleaning Up," of the Standard Specifications.

10-1.12 EARTHWORK

Earthwork shall conform to the provisions in Section 19, "Earthwork," of the Standard Specifications and these special provisions.

CONTRACT NO. 04-0120R4

CONTRACT CHANGE ORDER NO 6951

SHEET 51 OF 115

Surplus excavated material shall become the property of the Contractor and shall be disposed of in conformance with the provisions in Section 7-1.13, "Disposal of Material Outside the Highway Right of Way," of the Standard Specifications.

Reinforcement or metal attached to reinforced concrete rubble placed in embankments shall not protrude above the grading plane. Prior to placement within 0.6-m below the grading plane of embankments, reinforcement or metal shall be trimmed to no greater than 20 mm from the face of reinforced concrete rubble. Full compensation for trimming reinforcement or metal shall be considered as included in the contract prices paid per cubic meter for the types of excavation shown in the Engineer's estimate, or the contract prices paid for furnishing and placing imported borrow or embankment material, as the case may be, and no additional compensation will be allowed therefor.

Imported borrow shall be mineral material including rock, sand, gravel, or earth. The Contractor shall not use man-made refuse in imported borrow including:

A. Portland cement concrete,
B. Asphalt concrete,
C. Material planed from roadway surfaces,
D. Residue from grooving or grinding operations,
E. Metal,
F. Rubber,
G. Mixed debris,
H. Rubble

CONTRACT NO. 04-012024

CONTRACT CHANGE ORDER NO 6951

SHEET 52 OF 115

10-1.13 HEALTH AND SAFETY PLAN

The Contractor shall prepare a Health and Safety Plan to prevent or minimize exposure to contaminants of concern. The Contractor's attention is directed to Title 8, California Code of Regulation, Section 5192 (b) (4)(B) Occupational Safety and Health Guidance Manual published by the National Institute of Occupational Safety and Health (NIOSH), Occupational Safety and Health Administration (OSHA), for elements of the site safety plan. The Health and Safety Plan shall contain as a minimum but not be limited to: identification of key personnel for the project, job hazard analysis for work assignments, summary of risk assessment, air monitoring plan, personal protective equipment, delineation of work zones on-site, decontamination procedures, general safe work practices, security measures, emergency response plans and worker training. The Health and Safety Plan shall be approved by the Contractor's Certified Industrial Hygienist before submission to the Engineer for review and acceptance. The plan shall be submitted to the Engineer at least 15 working days prior to beginning any work in the project area.

TRAINING

Personnel who have no prior training or are not current in their training status, including State personnel, shall complete a safety training program provided by the Contractor, which meets the requirement of Title 8, California Code of Regulations, Section 5192 (b). The Contractor shall provide a written certification of completion of safety training to the Engineer for all trained personnel prior to performing any work in areas containing contaminants of concern.

EQUIPMENT AND MEDICAL SURVEILLANCE

Personnel protective equipment, training, and medical surveillance required by the Contractor's Health and Safety Plan shall be provided to State personnel by the Contractor. The number of State personnel will be 2.

PAYMENT

The contract lump sum price paid for the Health and Safety Plan shall include full compensation for furnishing all labor, materials, tools, equipment, and incidentals and for doing all work involved in preparing and implementing the Health and Safety Plan including paying the Certified Industrial Hygienist and for providing personal protective equipment, training and medical surveillance as specified in these special provisions and as directed by the Engineer.

10-1.14 AGGREGATE SUBBASE

Aggregate subbase must comply with Section 25, "Aggregate Subbases," of the Standard Specifications and these special provisions.

Aggregate subbase must be Class 4.

Do not store reclaimed asphalt concrete or aggregate subbase with reclaimed asphalt concrete within 30 m measured horizontally of any culvert, watercourse, or bridge.

Class 4 aggregate subbase must comply with:

CONTRACT NO. 04-012024

CONTRACT CHANGE ORDER NO 6951

SHEET 53 OF 115

Grading (Percentage Passing)

Sieve Sizes	Operating Range	Contract Compliance
63-mm	100	100
4.75-mm	30-65	25-70
75-µm	0-15	0-18

Quality

Test	Operating Range	Contract Compliance
Sand Equivalent	21 Min.	18 Min.
Resistance (R-value)	----	50 Min.

If tests show grading or sand equivalent does not comply with the "Operating Range" specifications but complies with the "Contract Compliance" specifications, you may place aggregate subbase for the remainder of that day. Do not start another day's work until tests or other information indicate the next day's material complies with the "Operating Range" specifications.

If tests show grading or sand equivalent does not comply with the "Contract Compliance" specifications, remove the aggregate subbase represented by the tests. If you request and the Engineer approves, that aggregate subbase may remain in place and the Department reduces payment by $3.00 per cubic meter for that aggregate subbase. If the subbase remains in place and both the grading and sand equivalent do not comply with "Contract Compliance" specifications, the Department only makes one payment reduction.

No single grading or sand equivalent test may represent more than the smaller of 400 m^3 or one day's production.

Instead of Class 4 aggregate subbase, you may place Class 1 aggregate subbase complying with the aggregate grading and quality requirements in Section 25-1.02A, "Class 1, Class 2, and Class 3 Aggregate Subbases," of the Standard Specifications. If you place Class __ aggregate subbase, do not change back to Class 4 subbase without written approval from the Engineer.

Regardless of the aggregate subbase class supplied, the Department pays for aggregate subbase as Class 4 aggregate subbase.

10-1.15 AGGREGATE BASE

Aggregate base must comply with Section 26, "Aggregate Bases," of the Standard Specifications and these special provisions.

Aggregate base must be Class 3.

Do not store reclaimed asphalt concrete or aggregate base with reclaimed asphalt concrete within 30 m measured horizontally of any culvert, watercourse, or bridge.

Class 3 aggregate base must comply with:

CONTRACT NO. 04-012084

CONTRACT CHANGE ORDER NO 6957

SHEET 54 OF 115

CONTRACT NO. 04-012024
CONTRACT CHANGE ORDER NO 6951
SHEET 56 OF 115

Grading (Percentage Passing)

Sieve Sizes	Maximum	
	Operating Range	Contract Compliance
50-mm		
37.5-mm		
25-mm	100	100
19-mm	90-100	87-100
4.75-mm	35-60	30-65
600-µm	10-30	5-35
75-µm	2-9	0-12

Quality

Tests	Operating Range	Contract Compliance
Sand Equivalent		
Resistance (R-value)		

If tests show grading or sand equivalent does not comply with the "Operating Range" specifications but complies with the "Contract Compliance" specifications, you may place aggregate base for the remainder of that day. Do not start another day's work until tests or other information indicate the next day's material complies with the "Operating Range" specifications.

If tests show grading or sand equivalent does not comply with the "Contract Compliance" specifications, remove the aggregate base represented by the tests. If you request and the Engineer approves, that aggregate base may remain in place and the Department reduces payment by $3.25 per cubic meter for that aggregate base. If the base remains in place and both the grading and sand equivalent do not comply with "Contract Compliance" specifications, the Department only makes one payment reduction.

No single grading or sand equivalent test may represent more than the smaller of 400 m^3 or one day's production.

10-1.16 ASPHALT CONCRETE

Asphalt concrete shall be Type _A__ and shall conform to the provisions in Section 39, "Asphalt Concrete," of the Standard Specifications and these special provisions.

The grade of asphalt binder to be mixed with aggregate for Type _A__ asphalt concrete shall be Grade _PG 64-10 conforming to the provisions in Section 92, "Asphalts," of the Standard Specifications.

The amount of asphalt binder used in asphalt concrete placed in dikes, gutters, gutter flares, overside drains and aprons at the ends of drainage structures shall be increased one percent by mass of the aggregate over the amount of asphalt binder determined for use in asphalt concrete placed on the traveled way.

The asphalt content of the asphalt mixture will be determined in conformance with the requirements in California Test 379, or in conformance with the requirements in California Test 382.

Paint binder (tack coat) shall be applied to existing surfaces to be surfaced and between layers of asphalt concrete, except when eliminated by the Engineer.

Paint binder (tack coat) shall be, at the option of the Contractor, either slow-setting asphaltic emulsion, rapid-setting asphaltic emulsion or paving asphalt. Slow-setting asphaltic emulsion and rapid-setting asphaltic emulsion shall conform to the provisions in Section 39-4.02, "Prime Coat and Paint Binder (Tack Coat)," and the provisions in Section 94, "Asphaltic Emulsions," of

the Standard Specifications. When paving asphalt is used for paint binder, the grade will be determined by the Engineer. Paving asphalt shall conform to the provisions in Section 39-4.02, "Prime Coat and Paint Binder (Tack Coat)," and the provisions in Section 92, "Asphalts," of the Standard Specifications.

Paint binder (tack coat) shall be applied in the liter per square meter range limits specified for the surfaces to receive asphalt concrete in the tables below. The exact application rate within the range will be determined by the Engineer.

CONTRACT NO. 04-012084

CONTRACT CHANGE ORDER NO 6951

SHEET 54 OF 115

CONTRACT NO. 04-0A2024
CONTRACT CHANGE ORDER NO 6951
SHEET 57 OF 115

10-1.17 REINFORCEMENT

Reinforcement shall conform to the provisions in Section 52, "Reinforcement," of the Standard Specifications and these special provisions.

The Department's mechanical splices prequalified list can be found at the following internet site:

http://www.dot.ca.gov/hq/esc/approved_products_list/

The provisions of "Welding Quality Control" of these special provisions shall not apply to resistance butt welding.

MEASUREMENT AND PAYMENT

Measurement and payment for reinforcement in structures shall conform to the provisions in Section 52-1.10, "Measurement," and Section 52-1.11, "Payment," of the Standard Specifications and these special provisions.

10-1.18 SANITARY SEWER LIFT STATION

A sanitary sewer lift station shall be furnished and installed in conformance with the details shown on the plans and these special provisions.

A sanitary sewer lift station shall consist of shaft, duplex pumps with motors, pump enclosure, foundation, pipe, fittings, valves, controls and appurtenances necessary for the satisfactory operation of the sanitary sewer lift station. Service equipment and electrical equipment shall conform to the provisions in Section 10-3 of these special provisions. Incidental material or equipment not mentioned in these special provisions or shown on the plans, which may be necessary for completion and satisfactory operation of the sanitary sewer lift station, shall be furnished and installed.

All components of the sanitary sewer lift station shall be warranted for two years from date of first operation.

MATERIALS LIST AND DRAWINGS

In conformance with the provisions in Section 5-1.02, "Plans and Working Drawings," of the Standard Specifications, the Contractor shall submit, within 15 days after approval of the contract, a list of materials which the Contractor proposes to furnish and install for the sanitary sewer lift station together with the drawings and other data as specified below:

A. The materials list shall be a complete listing of the manufacturer, catalog number, size, and capacity of the manufactured articles. There shall be a working drawing for the sanitary sewer lift station showing the pump details, piping, and equipment as planned to be furnished and installed and for other materials to be fabricated for the installation. Directions for maintenance and adjustment of the pump shall be furnished to the Engineer as well as a manufacturer's certified performance characteristics curve diagram for the pump.

B. The data submitted shall be labeled with a descriptive title, project description and contract number of the project.

At least 4 copies of the data shall be initially submitted to the Engineer for approval. The Engineer will review the submitted data and will return to the Contractor either one set for correction or 2 sets that have been approved.

CONTRACT NO. [illegible]
CONTRACT CHANGE ORDER NO 69572
SHEET 55 OF 115

After approval, 6 sets of Operation and Maintenance Manuals for the sanitary sewer lift station shall be submitted.

The State shall not be liable for materials purchased or labor performed, prior to approval of the drawings and materials list, and will not be responsible for any delay to the Contractor pending review of the drawings and information submitted after the 15-day period mentioned.

PUMP AND MOTOR

Pumps shall be heavy-duty, submersible, non-clog, centrifugal, quick disconnect pumps. The pumps shall be a Flygt Model NP3102.090 with 5 hp motor. Power supplied will be 208 volt 3 phase.

Pump Construction

A. General: The pumps shall be designed to permit ground-level removal of pumping units from the wet well for inspection or service without disconnecting or disturbing the discharge piping. The pump connection shall be metal to metal. The design shall permit the pumps when lowered into place to be automatically connected to the discharge piping by positively locking the volute in position to prevent any axial or lateral movement. There shall be no need for personnel to enter the wet well when pump inspection or service is required.

B. Piping, fittings, and Appurtenances: Each pump shall be furnished with quick-disconnect discharge elbow, AISI Type 316 stainless steel standard pipe rails, upper guide rail bracket, intermediate guide rail bracket, rail-guided lifting assembly and AISI Type 316 stainless steel chain of sufficient strength to raise and lower pump. All miscellaneous metal within the wet well shall be stainless steel. Anchor bolts shall be stainless steel.

C. Pump Castings: Castings and other major pump components shall be of grey cast iron, ASTM A-48, Class 35B, shall be of cast iron and free from blowholes, porosity, hard spots, shrinkage defects, cracks, and other injurious defects. All metal surfaces coming into contact with the sewage, other than stainless steel or brass, shall be protected by a factory applied spray coating of acrylic dispersion zinc phosphate primer with a polyester resin paint finish on the exterior of the pump. The casings shall be designed to permit replacement of wearing parts. Joints shall be properly sealed with Nitrile or Viton rubber O-rings and shall not leak under a test pressure equal to 50 percent greater than the pump shut-off pressure. Passageways shall permit smooth flow and shall be free from sharp turns and projections.

D. Impellers: Impellers shall be of (spheroidal graphite) gray iron class 35B, cast steel, or an alloy suitable for the service required. The impellers shall be smooth and free flowing and shall have sufficient clearance to permit 75 mm objects in the sanitary waste water that enter the pump to pass into the discharge pipe. Each impeller shall be accurately fitted and keyed, splined, or threaded on the shaft, and locked in such a manner that lateral movement will be prevented and reverse rotation will not cause loosening.

E. Balance: All rotating parts of the equipment shall be in such balance, mechanically and hydraulically, as to operate without excessive end thrust, vibration or noise.

F. Shafts: Shafts shall be steel, and be provided with alignment bearings.

G. Bearings: Bearings subject to submersion shall be ball bearings manufactured from high-grade bearing alloy.

H. Mechanical Seals: Each pump shall be equipped with tungsten carbide seals.

I. The Power cable shall be sized according to the NEC and ICEA standards and shall be of sufficient length to reach the junction box without the need of any splices. The outer jacket of the cable shall be oil resistant chloroprene rubber. The motor and cable shall be

CONTRACT NO. 04-012024
CONTRACT CHANGE ORDER NO 6951
SHEET 59 OF 115

capable of continuous submergence underwater without loss of watertight integrity to a depth of 65 feet. The cable entry seal design shall preclude specific torque requirements to insure a watertight and submersible seal. The cable entry shall consist of a single cylindrical elastomer grommet, flanked by washers, all having a close tolerance fit against the cable outside diameter and the entry inside diameter and compressed by the body containing a strain relief function, separate from the function of sealing the cable. The assembly shall provide ease of changing the cable when necessary using the same entry seal. The cable entry junction chamber and motor shall be separated by a stator lead sealing gland or terminal board, which shall isolate the interior from foreign material gaining access through the pump top. Epoxies, silicones, or other secondary sealing systems shall not be considered acceptable.

J. Electrical motors: Submersible, and the following requirements:

1. Air filled (not oil filled) squirrel cage induction type
2. Service factor of 1.15 or better
3. Class F insulation, Class B temperature rise
4. Rated for 6 starts per hour
5. Listed by either UL or FM for Class 1, Division 1, Groups C and D hazardous locations
6. Suitable for operating either in free air or continuously submerged in sewage
7. Bearing B10 life 18,000 hours minimum
8. Tungsten carbide seals
9. Lower bearings of either the ball or roller type
10. Provide a moisture detection system and a motor winding thermostat system, connected to the station control panel.

These systems shall be complete, including all necessary interfaces, control panels, conduits, and wires, even though these may not be shown on the Drawings.

Miscellaneous Materials: Bolts, nuts, anchors, washers, and all other types of support necessary for the installation of the pumps and drive units shall be provided and shall be of stainless steel.

Shop Painting: Pump, motor, and accessories shall be factory applied and finish painted in accordance with the manufacturer's standard.

Tools and Spare Parts: The pumps shall be furnished with a full set of manufacturer's recommended spare parts and special tools and maintenance instructions.

PIPE, VALVES, JOINTS AND FITTINGS

Valves shall be the type shown on the plans and shall be Class 125 unless otherwise shown on the plans.

Gate valves shall be iron body, wedge gate type with bronze trim and non-rising stem.

Check valves shall have cast iron body and gate, flanged ends, and bronze trim. The valves shall be the spring-loaded lever type for nonslamming under the conditions of operation and shall have stainless steel spring and shaft.

Pipes and fittings for piping 4 NPS or greater shall be ductile iron.

Ductile iron pipe shall be restrained, push-on joint pipe conforming to ANSI/AWWA C151/A21.51.

Restrained push-on joints for ductile iron pipe shall conform to ANSI/AWWA C111/A21.11. The joints shall be boltless, non-compression, non-threaded with synthetic rubber gasket seals and have a positive-locking device to keep the connection from separating. The pipe joints shall

CONTRACT NO. 04-012024
CONTRACT CHANGE ORDER NO 6957
SHEET 60 OF 115

be designed for a working pressure of 2,413 Kpa and be capable of deflecting after assembly. Fittings and flanges for ductile iron pipe shall conform to ANSI/AWWA C110/A21.10, except for the manufacturer's proprietary design dimensions for restrained push-on joint pipe.

Ductile iron pipe and fittings shall have cement mortar lining and seal coating conforming to ANSI/AWWA C104/A21.4. Pipe shall have an asphaltic coating and/or polyethylene encasement outside coating conforming to ANSI/AWWA C151/A21.51, and fittings shall have an asphaltic coating and/or polyethylene encasement outside coating conforming to ANSI/AWWA C110/A21.10.

Pipe supports

All anchor bolts, nuts, pipe clamps, and other fittings shall be suitable for the type and size of the lines or casing, and shall conform to the provisions in Section 75-1.03, "Miscellaneous Bridge Metal", of the Standard Specifications.

Locate pipe supports as indicated in the plans. Unless stated otherwise, use AISI type 316 stainless steel for fabrication of pipe supports and stainless steel heavy hex head bolts with hardened washers and heavy hex nuts for bolted connections. Pipe supports shall be fabricated and installed according to MSS SP-58 and SP-69.

Dimensions and elevations for supports are the responsibility of the contractor and should be confirmed in the field prior to fabrication and installation.

Link Type Penetration Seal

The pipe to wall penetration closures shall be a modular mechanical type consisting of interlocking synthetic rubber links shaped to continuously fill the annular space between pipe and wall opening. Once expanded, the seal shall provide a watertight seal between pipe and wall. Pressure end plates shall be manufactured of glass reinforced plastic with a tensile strength of 186 mPa.

WET WELL

The wet well shall consist of precast wet well barrel sections as shown on the plans and in accordance with Section 70 1.02H "Precast Concrete Structures" of the Standard Specifications. The barrel sections shall conform to ASTM C-478 with single groove rubber joint gaskets. The concrete rings shall consist of Type II / Type V cement with appropriate corrosion protection against contaminated soils.

VALVE BOXES

Valve boxes shall conform to the provisions in Section 20-2.24, "Valve Boxes" of the Standard Specifications. A floor drain with deep trap shall be provided to drain the valve box to the wet well.

FOUNDATIONS

Concrete for foundations and pads shall be minor concrete and shall contain not less than 325 kg of portland cement per cubic meter. Type II / Type V cement with appropriate corrosion protection against contaminated soils shall be used for all concrete foundations and pads.

PRESSURE GAGES

Pressure gages shall be the dial type, shall be clear glycerin filled with a 65-mm minimum diameter weathertight epoxy case, and shall have accuracy within 3 percent of the full scale reading.

PUMP CONTROL

Panel

The pump control panel enclosure shall be 14 gauge 316 stainless steel. Panel shall have removable door, hinges constructed of 316 stainless steel and stainless steel hinge pins. Enclosure standards shall meet UL 508 for NEMA 4X. Enclosure shall comply with NEMA Type 4 and IEC 529, IP66. Back panel construction shall be 12 gauge steel. Swing panel shall maintain UL and NEMA ratings when installed. All operational status components shall be mounted on the swing panel. A single-phase 20 amp outlet shall be provided.

Controls

Station controls shall include the following:

A. Lockable external disconnect switch.
B. Motor starters, NEMA rated and sized for the next largest size (7.5 hp) pump motors.
C. 12 20amp-1-pole Circuit breakers, molded case and rated for short-circuit current.
D. Control power transformer with primary and secondary circuit breakers.
E. A 120V-12v dc for telemetering
F. Two circuit breakers for the pumps and two contactors
G. Transfer switch with receptacle to connect portable emergency generator. The switch enclosure shall be 316 stainless steel, NEMA 4X.

    1. Transfer switch shall be manually operated, 100 Amp, 240 V, 3 phase.
    2. Receptacle shall be four-wire, four-pole Crouse-Hinds Catalog AR1041 model M3 or equal.

H. MultitSmart Pump Control System. In order to maintain consistency in operation, control, programming, data collection, maintenance and spare parts, the pump control system shall be a MultiSmart Pump Controller and RTU as manufactured by MultiTrode Inc. USA, (561)994-8090, www.multitrode.com. The Controller shall interface with an existing OMNEX wireless system. The following boards shall be included:

    1. Pump Control/General I/O
    2. CPU Board
    3. DSP Board
    4. Motor Protection

I. Rechargeable battery system of sufficient voltage and capacity to maintain all electronic systems for 12 hours.
J. The level indicator shall be of the conductance probe type compatible with the MultiSmart Pump Control System. The probe shall be constructed from PVC tubing with molded sensor units at regular intervals along the probe. Each sensor unit shall be PVC injected to prohibit ingress of moisture, and the sensor material shall be stainless steel. The probe shall be suspended on its own cable and connected to a stainless steel hook which shall hang from a stainless steel angle containing a polyurethane squeegee pad positioned in the opening into the wet well, so that the probe can be removed without entering the wet well. The squeegee shall have a hole and slot, enabling the probe to be pulled through and cleaned. Probe cable shall be run in a separate conduit away from any high voltage cables. Ten sensors shall be spaced along the length of the probe assembly,

CONTRACT NO
CONTRACT CHANGE ORDER NO 6GSZ
SHEET 62 OF 115

each individually connected to a correspondingly numbered flexible cable. The molded sensor unit shall contain two sensors mounted on opposite sides of sensor unit. The probe shall be pressure injected with an epoxy resin to encapsulate all internal components and connections to form a rigid, homogenous unit. Each sensor unit containing the two sensors shall be rotated 90 degrees to the previous sensor unit to eliminate tracking between sensors. The cable shall be encoded with number and text along the entirety of the cable and at intervals not greater than 200mm for identification. The flexible cables shall be capable of supporting the weight of the probe and cable without the need for additional support. The cable shall be secured to the top of the probe by a synthetic rubber compression fitting.

INSTALLATION

Equipment shall be installed in accordance with manufacturer's instructions. Guide rails shall be secured in place. Each pump unit shall be connected to its corresponding discharge nozzle through the rail system. Smooth, correct operation of the lifting mechanism shall be demonstrated. Connect power and control cables and verify continuity and function.

Piping shall be supported as shown on the plans and in conformance with these special provisions. Pipes shall be held in place by hangers, supports, pipe rests, anchors, sway braces, guides or other special hangers. Allowances shall be made for expansion and contraction. Pipes shall have hangers or supports every 3 meters. Pipes shall be supported at each joint. Vertical pipes shall be supported with clamps or straps. Horizontal and vertical piping shall be securely supported and braced to prevent swaying, sagging or flexing of joints.

Cleaning and closing of pipe

The interior of all pipes shall be cleaned before installation. All openings shall be capped or plugged as soon as the pipe is installed to prevent the entrance of any materials. The caps or plugs shall remain in place until their removal is necessary for completion of the installation.

TESTING

Piping through the valve box shall be tested in accordance with the provisions in Section 20-5.03H(1), "Method A", of the Standard Specifications, with no leakage or pressure drop. The Contractor shall furnish pipe anchorages to resist thrust forces occurring during testing. All leaks shall be repaired, and all defective materials shall be replaced by the Contractor at the Contractors expense.

All pressure testing and necessary repairing of lines shall be completed prior to backfilling, or otherwise covering the lines.

Each end of line shall be capped prior to and after the testing

The Control System shall be initially programmed in default condition. All available signals shall be connected to the Pump Control System.

In addition to its standard programming, the unit shall be configured to alarm through the OMNEX wireless system to be installed by others.

MEASUREMENT AND PAYMENT

Quantities of sanitary sewer lift station will be measured by the unit as determined from actual count in place.

The contract unit price paid for sanitary sewer lift station shall include full compensation for furnishing all labor, materials, tools, equipment, and incidentals, and for doing all the work involved in furnishing and installing the sanitary sewer lift station, complete in place, including foundations, valve vaults, sewer manhole, pump enclosures, and excavation and backfill, as

shown on the plans, as specified in the Standard Specifications and these special provisions, and as directed by the Engineer.

CONTRACT NO. 04-012024

CONTRACT CHANGE ORDER NO 69571

SHEET 63 OF 115

10-1.19 SEWER PIPE

Scope

This work shall consist of furnishing and installing Ductile Iron (DIP), Vitrified Clay (VCP), and Cast Iron (CIP) sewer pipes including excavating, lagging, backfilling and other incidental work, necessary or required for a complete, satisfactory sewer installation, in accordance with the details shown on the plans, these special provisions, and as directed by the Engineer.

Design Requirements

150 mm Ductile Iron Pipe

A. Ductile iron pipe shall be class 50 and comply with ANSI A21.51 (AWWA C151). Pipe joints shall comply with the following:

Type of Joint	Specification
Rubber Gasket Push-on Joint	ANSI A21.11 (AWWA C111)
Mechanical Joint	ANSI A21.11 (AWWA C111)
Flanged Joint	ANSI B16.1, B16.2, and A21.10 (AWWA C110)
Flanged Joint (Threaded Flanges)	ANSI B2.1

B. All rubber gasket, push-on, mechanical and flanged joint fittings for ductile iron pipe shall be manufactured in accordance with ANSI A21.10 (AWWA C110).

C. The interior surfaces of ductile iron pipe and fittings shall be lined with a uniform thickness of cement mortar then sealed with an asphaltic coating and/or polyethylene encasement outside coating in accordance with ANSI A21.51 (AWWA C151). The outside surfaces of ductile iron pipe and fittings for general use shall be coated with a asphaltic coating and/or polyethylene encasement in accordance with ANSI A21.10 or ANSI A21.51.

300 mm Vitrified Clay Pipe

A. Vitrified clay pipes (VCP) shall conform to the ASTM Designation: C700 "Standard Specifications for Extra Strength Clay Pipe," except as modified by the plans and these special provisions.

B. Joints for VCP plain-end pipe sewers 300 mm or smaller in diameter may be rubber compression couplings or composition coupling with stainless steel bands Class 316. Rubber compression couplings with Class 316 stainless steel bands shall be in accordance with the requirements of ASTM Designation C425. Composition couplings with Class 316 stainless steel bands shall be in accordance with the requirements of ASTM Designation : C425 "Tentative Specifications for Compression Couplings for Vitrified Clay Plain-End Pipe".

150 mm Cast Iron Pipe

A. Cast iron pipes (CIP) shall conform to the following standards:
   a. ANSI A21.8 (AWWA C101), "Thickness Design of Cast Iron Pipe."
   b. ANSI A21.6 (AWWA C106), "Cast Iron Pipe Centrifugally Cast in Metal Molds for Water or Other Liquids."
   c. ANSI A21.8 (AWWA C108), "Cast Iron Pipe Centrifugally Cast in Sand Lined Molds for Water or Other Liquids."
   d. ANSI A21.11 (AWWA C111), "Rubber Gasket Joints for Cast Iron Pressure Pipe and Fittings."

B. All joint fittings shall be push-on or mechanical.

C. The linings shall be double thickness of cement with bituminous seal coat.

Quality Assurance

A. The manufacturer of each shipment of pipe shall be required to supply a statement certifying that each lot or load of pipe has been manufactured and tested in accordance with these special provisions.

Execution

A. At all times when the work of installing pipe is not in progress, including worker break times, close the ends of the pipe with a tight-fitting, vermin-proof and child-proof, cap or plug. Do not permit trench water to enter the pipe. Do not place tools, clothing, or other materials in the pipe. The Contractor shall maintain the interior of the pipe in a sanitary condition free from foreign materials.

B. Where pipe sections less than the standard 3.96m or 6.10m pipe lengths are required, the pipe sections shall be installed in accordance with the manufacturer's installation guide and shall only be used with the approval of the Engineer. The minimum pipe length permitted is 1.52m when used to connect to manholes and cleanouts. The minimum pipe length permitted for stub outs shall be 900mm.

Pipe Installation

The Contractor shall furnish and install all pipe, specials, fittings, closure pieces, supports, gaskets, jointing materials, and all other appurtenances as shown and as required to provide a complete and workable installation. Pipe installation shall be as recommended in UNI-B-5 except as modified below and as shown on the plans.

A. Inspect each section of pipe prior to lowering the pipe into the trench. Thoroughly clean the ends of the pipe. Remove foreign matter and dirt from inside of the pipe and keep pipe clean during and after installation.

CONTRACT NO. ... CONTRACT CHANGE ORDER NO 1951
SHEET 66 OF 115

B. Install pipe according to the manufacturer's approved order of installation to the proper lines and grades as shown on the plans.

1. Pipe shall be installed with pipe bells up-grade. Lay pipes uphill if the grade exceeds ten percent (10%).

2. Installation tolerances for the pipe shall not vary more than 50mm horizontally or 25mm vertically from the alignment and elevations shown on the plans.

3. Install the pipe such that the identification markings on each pipe section are continuously aligned for the total length of the pipeline alignment. Orient the strip marking upward to the 12 o'clock position (top) of the trench opening.

4. Avoidance of reverse slope: Any pipeline installed with reversed slope, as evidenced by ponding of water or sag, is not allowed. Any such pipeline shall be removed and replaced (at proper line and grade) to the nearest upstream and downstream sewer structure as directed by the Engineer.

C. The pipe shall have firm bearing along its full length, and bell holes shall be provided at each joint to permit visual inspection of the joint and prevent the pipe from being supported by the bell end or coupling.

A. Field cutting and milling shall be accomplished to equal the quality of shop-fabricated ends in accordance with the manufacturer's written instructions.

B. Pipe Assembly: Assemble the pipe joint using the lubricant supplied by the pipe manufacturer. Insert the spigot end into the bell or coupling to the proper insertion mark. Check that the elastomeric ring has not left the groove during assembly by passing a feeler gauge around the completed joint. Drive the spigot end into the bell in accordance with the manufacturer's recommendations. Stabbing shall not be permitted.

F. Horizontal or vertical curve alignments shall be accomplished as required, in accordance with the manufacturer's recommendations. A combination of random pipe lengths, bending, and joint deflection shall be utilized to create smooth radius curves in accordance with the manufacturer's recommendations and as directed by the Engineer.

Connection to Existing Sewer System

A. Connection to the existing sewer system at an existing manhole or dead end shall be made as shown on the plans in accordance with these special provisions.

Contractor Responsibility

It is the Contractor's responsibility to visit the site and ascertain the present site conditions for the entire reach prior to beginning work. Any discrepancies between existing drawings and field conditions shall be brought to the attention of the Engineer immediately.

Traffic Control

The Contractor shall submit a traffic control plan to the agency having jurisdiction for its approval prior to starting the work.

Manholes

Seals around manholes shall be in accordance with the manufactures recommendations.

Storm Water Pollution Prevention Plan (SWPPP) Requirements

The Contractor shall abide by the conditions of the Regional Water Quality Control Board, General Construction Activity Storm Water Permit and the project Storm Water Pollution Prevention Plan (SWPPP).

Examination of Approved Plans, Specifications and Site

The Contractor shall carefully examine the site of the proposed work, the plans, the specifications, and all other pertinent documents. Contractor shall be satisfied as to the character, quality and quantities of work to be furnished, and as to the requirements of the plans and these special provisions. The District will not be liable for any loss sustained by the Contractor as a result of any variance between conditions as shown on the plans and the actual conditions revealed during the progress of the work or otherwise.

Quality of Materials

The work shall be performed in a thorough, worker-like manner in accordance with the plans, and these special provisions. All work shall conform to the lines and grades shown on said plans.

At least one member of the Contractor's workforce who is thoroughly familiar with the specified requirements of work and who is completely trained and experienced in the construction skills necessary for satisfactory completion of the work shall be present at the site, directing the work, at all times.

Adequate number of skilled workers and sufficient and appropriate equipment shall be present at the site prior to commencing daily construction operations.

The Engineer shall inform the Contractor if any person in the employ of the Contractor fails to or refuses to comply with the requirements of these special provisions, or appears to the Engineer to be incompetent or unfit, or to act in a disorderly, improper or unsafe manner. It shall be the Contractor's responsibility to dismiss any such person from the work site or take any other action deemed appropriate by the Contractor.

All equipment, materials, and supplies to be incorporated in the work shall be new. All equipment, material and supplies shall be produced in a good and workmanlike manner.

The Contractor may offer as substitution any material, process, or article substantially equal or better in every respect to that so indicated or specified; provided, however, that if the material, process, or article offered by the Contractor is not, in the opinion of the Engineer, substantially equal or better in every respect to that specified, then the Contractor must furnish the material, process, or article specified or one that in the opinion of the Engineer is substantially equal or better in every respect.

Shop Drawing Procedures -

A. Contractor shall submit six (6) copies of all shop drawings, submittals, and manufacturer's cut sheets detailing the methods and materials intended for use on the project. Submittals shall be consecutively numbered, shall be accompanied by a transmittal letter marked with the number and title of the submittal, name of the project, name and address of the Contractor and supplier, along with contact persons for same, and shall be checked by and marked with the approval of the Contractor. In addition, any submittals that deviate from the requirements of the Contract shall be clearly noted and explained in the transmittal letter.

B. The Engineer will review the submittals so provided, and will return the submittals marked to indicate that submittals are approved or must be returned for revision. The Engineer shall be allowed a minimum of five (5) working days for the review of submittals. Submittals returned for revision must be corrected as noted and the Contractor must re-submit shop drawings as noted above until approved by the Engineer. Review and approval of shop drawings by the Engineer shall not relieve the Contractor of the responsibility for executing the work in accordance with these special provisions, using proper methods of construction, nor from furnishing materials or work required but not indicated on the submittals.

C. Construction shall not begin on relevant portions of the work until shop drawing submittals have been approved by the Engineer. Shop drawings shall be submitted in a timely manner so as not to delay construction of the work.

Materials

All materials shall be new and unused, of the quality defined in these special provisions, and approved by the Engineer. All materials to be used within a specific project and intended for equivalent uses shall be identical as to manufacturer and model number. Materials not identical as to manufacturer and model number to those approved by the Engineer, materials that are damaged, or materials that are otherwise unacceptable to the Engineer shall be rejected and immediately removed from the job site.

A. The Contractor shall schedule a Pre-Construction Conference with the SFPUC's Inspection Department at least five (5) days prior to beginning any water or sewer work in the field. As a minimum, the attendees at this conference shall include:

B. The purpose of this meeting is to review the plans for the project relative to the requirements of these special provisions, and the plans. The Contractor shall be prepared to discuss, in detail, the project schedule, and shall provide the Engineer with any schedules, submittals, lists, permits, or other information required by the Engineer, by these special provisions or by the plans.

Inspection

All work and materials furnished shall be subject to inspection for compliance with these special provisions and all other appropriate specifications.

The SFPUC shall at all times have access to the work wherever it is in preparation or progress and the Contractor shall provide proper facilities for such access and for inspection. The Contractor shall provide adequate safe means by which to inspect the work.

Failure or oversight of any Inspector to condemn defective materials at the time of use, or to condemn improper work at the time it is performed, shall not diminish the Contractor's obligations to meet the requirements of the plans and these special provisions. The Contractor shall remove and replace any faulty materials and work at no additional cost to the Engineer upon discovery of the defects or upon receipt of notice from the Engineer to do so.

Defective work or material may be rejected prior to the date of acceptance of the work notwithstanding that such defective work or material may have been previously inspected. Acceptance shall not constitute approval of latent defects or waiver of maintenance requirements.

Any work covered up or otherwise rendered inaccessible without approval or consent of the Engineer must, if required by SFPUC, be uncovered for examination at the Contractor's expense. Any work done in the absence of the Engineer without written permission shall be subject to rejection.

Environmental Control

The Contractor shall abide by all applicable local, state and federal regulations, and by the conditions of the Regional Water Quality Control Board.

The Contractor shall provide effective measures where necessary to prevent operations from producing dust in an amount damaging to property or causing a nuisance as determined by the Engineer. The Contractor shall be responsible for any damage due to dust originating from its operations.
The Contractor shall anticipate and correct any erosion problem arising from its operations.

CONTRACT NO. CONTRACT CHANGE ORDER NO 69827
SHEET 70 OF 115

Public Safety and Traffic Control

A. The Contractor shall at all times conduct operations in a manner causing the minimum obstruction and inconvenience to public traffic. The Contractor shall not interfere with the normal operation of public transit vehicles unless otherwise authorized. Trench excavations shall conform with requirements of Section 5-1.02A, "Trench Excavation Safety Plans", of the Standard Specifications. In excavations where sand and or other non-cohesive material is encountered, placing of the necessary protective systems shall commence before a depth of 1.5 meter is attained. At night, lights shall mark all open work and obstructions. The Contractor shall install and maintain all signs, lights, flares, barricades, traffic plates, railings, runways, stairs, bridges and other equipment necessary to safeguard the public. Safety instructions received from governmental authorities shall be followed, but compliance with such instructions shall not diminish the Contractor's responsibility or liability for accidents to workers or damage or injury to persons or property.

In accordance with generally accepted construction practices, the Contractor shall be solely and completely responsible for conditions of the job site, including safety of all persons and property during performance of the work, and the Contractor shall fully comply with all state, federal, and other laws, rules, regulations, and orders relating to the safety of workers and others.

The right of the Engineer to conduct construction review or observation of the Contractor's performance does not include review or observation of the adequacy of the Contractor's safety measures in, on, or near the construction site.

The Contractor shall take immediate action to correct any condition adversely affecting public safety.

B. The Contractor shall submit a traffic control plan to the Engineer and shall obtain approval prior to starting the work.

Protection of Existing Facilities

A. The Contractor's attention is directed to the provisions in Section 15, "existing Highway Facilities," of the Standard Specifications and these special provisions. Attention is directed to the possible existence of pipe and other underground improvements that may or may not be shown on the plans. Once discovered, the Contractor shall preserve and protect all such improvements whether shown on the plans or not. The Contractor shall provide and install suitable safeguards, and shall be responsible for the care and protection of all existing sewer and water pipe, telephone conduit, gas mains, culverts, or other above-ground or below-ground facilities or structures which may be encountered in or near the area of work. It shall be the responsibility of the Contractor to notify each agency of jurisdiction and utility company and to make arrangements for location of facilities prior to beginning construction. In the event of damage to existing facilities during the progress of the work, such facilities shall be replaced or restored to original condition, as determined by the Engineer, at the Contractor's expense.

B. The Contractor shall be responsible for determining in advance the location, elevation, alignment and pipe type and size of all existing pipelines to which connections are to be made. Potholing to determine location will be allowed only after providing the Engineer with three (3)

CONTRACT CHANGE ORDER NO 16457
SHEET 71 OF 115

day's advance notice. The Contractor is required to contact Underground Service Alert (USA) at 1-800-227-2600 or 1-800-422-4133 for mark-out of all utilities in the area of the work.

C. If the Contractor, either before commencing work or during the course of the work, finds any discrepancy between specifications or drawings and the physical conditions at the site of the work, Contractor shall promptly notify the Engineer in writing of such discrepancy.

Protection of Workers in Tench Excavation

Whenever work involves trench excavation, the Contractor shall provide all necessary shoring, bracing, sloping, or other provisions to be made for worker protection from hazard of caving ground during the excavation. If such plan varies from the shoring system standards established by the Construction Safety Orders of the Division of Industrial Safety, a Civil Engineer or Structural Engineer registered in the State of California shall prepare the plans.

Contractor shall comply with the Safety Orders of California, Code of Regulations: Title 8, Section 1539 (Excavation, Trenches, Earthwork).

Work within Confined Spaces

The Contractor shall comply with all Federal and State regulations for confined space entry. Work inside confined spaces as defined by the applicable regulations shall not be undertaken until all the tests and safety provisions of the Code of Federal Regulations 1910.146, and the Safety Orders of the California Code of Regulations Title 8 Article 108 sections 5156 et seq. for confined space entry have been performed and the area is verified as safe to enter.

Construction Equipment

The Contractor shall furnish appropriate construction equipment to perform the work in accordance with the plans and these special provisions. Such equipment shall be in a good state of repair and shall be maintained in such state during the progress of the work. In no case shall the manufacturer's rating or capacity for any equipment be exceeded.

Storage of Materials

All materials for use in the work shall be stored by the Contractor in such manner as to prevent damage from exposure to the elements, admixture of foreign materials, or from any other cause. The Contractor shall be entirely responsible for damage or loss by weather or other causes. The Material Safety Data Sheets (MSDS) for all products to be used in the work shall be kept on-site by the Contractor, and the material manufacturer's recommendations for proper storage of its products shall be strictly followed.

Power for Construction Purposes

Contractor shall make all arrangements for electrical power required during construction.

Housekeeping During Construction and Final Cleanup

A. The Contractor shall provide suitable drainage and shall erect such temporary structures as are necessary to protect the work or materials from damage. The Contractor shall rebuild, repair, restore, and make good all injuries, losses, or damages to any portion of the work or the materials occasioned by any cause before the acceptance of the work by the Engineer and shall bear the expense thereof.

B. The Contractor shall, at all times during the course of the work, maintain work areas and all adjacent properties and public access roads free from accumulations of waste, debris, rubbish or construction materials.

C. The Contractor shall conduct cleaning and disposal operations to comply with local ordinances and anti-pollution laws.

D. Dry materials and rubbish shall be moistened to prevent blowing dust. Loads of excavated materials leaving the site or being imported to the site shall be covered or moistened to prevent blowing dust.

E. Upon completion of the work, and before making application for acceptance of the work, the Contractor shall clean all rights-of-way, roads, borrow pits, and all other grounds occupied by him in connection with the work. All rubbish, excess materials, temporary structures and equipment shall be removed. All parts of the work shall be left in a neat and presentable condition, as determined by the Engineer.

Hazardous Wastes and Unknown Physical Conditions

If conditions listed below are found during construction, or if any other conditions are found during construction that may be detrimental to the SFPUC's facilities being constructed, or to the health and safety of the public, the Contractor shall promptly notify the Engineer.

A. Material that the Contractor or Engineer believes may be hazardous waste, as defined in Section 25117 of the Health and Safety Code, and is thus required to be removed to a Class I, Class II, or Class III disposal site in accordance with the provisions of existing law. If such material is discovered, Contractor shall immediately cease work and shall not disturb the job site except as required to protect public safety.

B. Subsurface or latent physical conditions at the site differing from those indicated.

C. Unknown physical conditions at the site of any unusual nature, different materially from those ordinarily encountered and generally recognized as inherent in work of the character provided in the Contract.

The Contractor shall promptly inform the Engineer of any such conditions found during construction. The Engineer shall investigate the conditions, and if it finds that the conditions do materially differ from those shown or expected, or do involve material that may be hazardous

CONTRACT NO. 6987
CONTRACT CHANGE ORDER NO
SHEET 23 OF 45

waste, Contractor shall cease work in the impacted area. If material that may be hazardous waste is discovered, the Engineer shall insure that the appropriate government agencies are contacted prior to any further work being performed and that a solution is implemented.

Pipe Zone

The pipe zone includes the full width of the trench from 150mm below the bottom of the pipe to 300mm above the top of the pipe and extends into manhole or vault excavations to the point of connection to or penetration of such structure.

Trench Zone

The trench zone includes the portion of the trench from the top of the pipe zone to the bottom of the pavement zone in paved areas, or to the existing surface in unpaved areas, and extends into manhole or vault excavations above the pipe zone.

Pavement Zone

The pavement zone includes the concrete or asphalt concrete pavement and aggregate base section placed over the trench zone and extends into manhole or vault excavations above the trench zone.

Access

The Contractor shall provide continuous, unobstructed access to all driveways, water valves, hydrants, or other property or facilities within or adjacent to the work areas.

Blasting

Blasting for excavation shall not be performed without the written permission of the Engineer. Procedures and methods of blasting shall conform to all Federal, State and local laws and ordinances.

Pipe Jacking

Tunneling or jacking shall not be used unless specified or approved in writing by the Engineer.

Excess Excavated Material

The Contractor shall remove and legally dispose of all excess excavated material and demolition debris.

CONTRACT NO. 04-012084

CONTRACT CHANGE ORDER NO 6957

SHEET 74 OF 115

Materials

The Contractor shall furnish backfill material as specified below. All materials used in and above the pipe zone shall be capable of attaining the required relative density.

Imported Granular Material – Pipe Zone

Imported Granular Material shall be used within the Pipe Zone for installations of all pressure pipe and tubing.

The Imported Granular Material shall be quarry waste (decomposed granite) free from organic matter. Material shall have a sand equivalent value of not less than 30 per ASTM D 2419, a coefficient of uniformity of 3 or greater, and shall conform to the following gradation:

U.S. Standard Sieve Size	Percent Passing By Weight
25mm	100
19mm	90 – 100
4.75mm	50 – 95
600µm	25 – 45
75µm	3 – 15

Native materials may not be used in lieu of Imported Granular Material within the Pipe Zone unless such native materials meet all of the requirements specified above and specific written permission has been obtained from the Engineer.

Crushed Rock – Pipe Zone

Crushed Rock shall be used within the Pipe Zone for installations of all non-pressure pipe. Crushed rock shall be clean crushed stone free of organic matter. Crushed rock shall be certified to contain less than 1% asbestos by weight or volume and shall conform to the following gradation and requirements:

U. S. Standard Sieve Size	Percent Passing By Weight
25mm	100
19mm	90-100
12.5mm	30-60
9.5mm	0-20
4.75mm	0-5
2.36mm	----

CONTRACT NO
CONTRACT CHANGE ORDER NO 6951
SHEET 75 OF 115

ASTM C 131 Testing Grade B

Test	Test Method	Requirement
Percentage Wear	ASTM C 131	----
100 Revolutions	----	15 Maximum
500 Revolutions	----	52 Maximum

Imported Granular Material – Trench Zone

Imported Granular Material shall be used within the Trench Zone for installations of all pressure pipe and tubing and all non-pressure pipe.

Imported Granular Material for use within the Trench Zone shall conform in all ways to Imported Granular Material specified for use within the Pipe Zone.

Native materials may not be used in lieu of Imported Granular Material within the Trench Zone unless such native materials meet all of the requirements specified for Imported Granular Material within the Pipe Zone and specific written permission has been obtained from the Engineer.

Sand-Cement Slurry

Sand-cement slurry shall consist of two sacks, 85.3kg (188 pounds) of Portland cement per cubic yard of sand and sufficient moisture for workability. District approval is required for use of sand-cement slurry as a backfill material.

Trench Plugs

Trench plugs consisting of compacted Imported Granular Material or sand-cement slurry shall be installed on piping systems that are backfilled with crushed rock.

Filter Fabric

Filter fabric shall be manufactured from polyester, nylon, or polypropylene. Material shall be of non-woven construction and shall meet the following requirements:

Grab tensile strength (ASTM D 4632): 45.4kg (100 lbs) minimum for a 25mm (1") raveled strip.
Weight (ASTM D 3776): 152.6g/m^2 (4.5 oz./yd^2)
Apparent opening size (ASTM D 4751): 0.150mm (0.006")

Dewatering

A. The Contractor shall provide and maintain at all times during construction ample means

CONTRACT NO. [illegible]
CONTRACT CHANGE ORDER NO 6951
SHEET 76 OF 115

and devices to promptly remove and dispose of all water from any source entering excavations or other parts of the work. Dewatering shall be performed by methods that will ensure a dry excavation and preservation of the final lines and grades of the bottoms of excavations. Dewatering methods may include well points, sump points, suitable rock or gravel placed as pipe bedding for drainage and pumping, temporary pipelines, or other means, all subject to the approval of the Engineer. The cost of all dewatering activities shall be borne by the Contractor.

B. Sewer systems shall not be used as drains for dewatering trenches or excavations, nor for disposal of collected or accumulated groundwater, without the approval of the agency of jurisdiction.

C. Concrete shall not be poured in water, nor shall water be allowed to rise around concrete or mortar until it has set at least four hours.

D. The Contractor is responsible for meeting all Federal, State, and local laws, rules and regulations regarding the treatment and disposal of water from dewatering operations at the construction site.

Shoring and Shielding

A. The Contractor's design and installation of shoring shall be consistent with the rules, orders, and regulations of CAL-OSHA.

B. Excavations shall be shored, sheeted, and supported such that the walls of the excavation will not slide or settle and all existing improvements of any kind, either on public or private property, will be fully protected from damage.

C. The sheeting and shoring shall be arranged so as not to place any stress on portions of the completed work until the general construction has proceeded far enough to provide ample strength.

D. Care shall be exercised in the moving or removal of trench shields, sheeting, and shoring to prevent the caving or collapse of the excavation faces being supported.

Correction of Overexcavation

Overexcavations shall be corrected by backfilling with approved imported granular material or crushed rock, compacted to 90% relative compaction, as directed by the Engineer.

Foundation Stabilization

A. When unsuitable soil materials are encountered, the unsuitable material shall be removed to the depth determined necessary in the field by the Engineer. The sub-grade shall be restored with compacted Imported Granular Material or crushed rock as recommended by the Engineer. Place the appropriate bedding or base material on this restored foundation.

CONTRACT CHANGE ORDER NO 6457
SHEET 77 OF 115

B. When rock encroachment is encountered, the rock shall be removed to a point below the intended trench or excavation sub-grade as determined necessary in the field by the Engineer. The sub-grade shall be restored with compacted Imported Granular Material as recommended by the Engineer. Place the appropriate bedding or base material on this restored foundation.

C. When excessively wet, soft, spongy, or similarly unstable material is encountered at the surface upon which the bedding or base material is to be placed, the unsuitable material shall be removed to the depth determined necessary in the field by the Engineer. Restore the trench with crushed rock enclosed in filter fabric as directed by the Engineer. Larger size rocks, up to 75 mm, with appropriate gradation, may be used if recommended by the Engineer. Place the appropriate bedding or base material on this restored foundation.

Trench Excavation and Placement of Bedding

A. Excavate the trench to the lines and grades shown on the drawings with allowance for 150mm of pipe bedding material.

B. The maximum length of open trench shall be 152m except by permission of the Engineer, City or County. The distance is the collective length at any location, including open excavation and pipe laying, which has not been backfilled to the elevation of the surrounding grade.

C. Trench walls shall be sloped or shored per the requirements of CAL-OSHA.

D. The trench bottom shall be graded to provide a smooth, firm, and stable foundation that is free from rocks and other obstructions.

E. Place the specified thickness of bedding material over the full width of the trench. Grade the top of the pipe base ahead of the pipe laying to provide a firm, uniform support along the full length of pipe.

F. Excavate bell holes at each joint to permit proper assembly and inspection of the entire joint.

G. Trenches for main pipelines and all appurtenances shall be backfilled with the materials and methods as specified for the Pipe Zone, Trench Zone and Pavement Zone.

H. Trench depth shall be as required to install pipelines in accordance with the plans and these special provisions. Unless shown otherwise in the plans, the minimum cover for pipelines shall be as follows:

Pipeline Application	Minimum Cover Required
Potable Water	0.91m
Recycled Water	1.22m
Sewer	1.52m

I. Final street sub-grade shall be established prior to the excavation of pipeline trenches. Minimum cover above pipe shall be 600mm for hydrotesting.

Manhole and Vaults

A. The Contractor shall prepare an excavation large enough to accommodate the structure and permit grouting of openings and backfilling operations. The walls of the excavation shall be sloped or shored per the requirements of CAL-OSHA.

B. Manholes and vaults shall be placed at the location and elevation shown on the plans, on undisturbed soils and 150mm of compacted crushed rock base.

C. Manhole and vault excavations shall be backfilled with the materials and methods as specified for the Pipe Zone, Trench Zone and Pavement Zone.

Compaction Requirements

A. Compaction shall be accomplished by mechanical means. Consolidation by water settling methods such as jetting or flooding is prohibited.

B. If the backfill fails to meet the specified relative compaction requirements; the backfill shall be reworked until the requirements are met. All necessary excavations for density tests shall be made as directed by the Engineer.

C. Compaction tests shall be performed at random depths, and at random intervals not to exceed 45m, as directed by the Engineer.

D. Relative compaction shall be determined by the impact or field compaction test made in accordance with ASTM D 1557 Procedure C.

E. Unless otherwise shown on the drawings or otherwise described in the specifications for the particular type of pipe installed, relative compaction in pipe trenches shall be as follows:

1. Pipe zone - 90% relative compaction.
2. Trench zone - 90% relative compaction.
3. Structural section in paved areas - per agency requirements, 95% minimum.
4. Imported Granular Material for over excavation or foundation stabilization - 90% relative density.

F. All excavations are subject to compaction tests.

Trench Plugs

Trench plugs shall be installed at 60m intervals along the entire length of piping systems. Trench plugs shall be 3m in length and shall encompass the entire pipe zone. Additional trench plugs may be required as directed by the Engineer.

Pipe Zone Backfill

A. Care shall be taken in placing the imported granular backfill material simultaneously around the main pipeline and appurtenance pipes so that the pipe barrel is completely supported and that no voids or uncompacted areas are left beneath the pipe or on the sides of the pipe. Care shall be taken to place material simultaneously on both sides of the pipe to prevent lateral movement. This area shall be mechanically compacted to attain 90% relative density. Care shall be taken when compacting appurtenance laterals 50mm and smaller to prevent the crushing or denting of the copper lateral. Additional lifts of 300mm or less thickness may be required on 400mm or larger diameter pipe to attain complete support of the haunch area. Soils tests may be taken on this layer of backfill.

B. After the spring line backfill has been approved by the Engineer, backfill of the remainder of the Pipe Zone may proceed. Do not drop sharp, heavy pieces of material directly onto the pipe or the tamped material around the pipe.

C. Place and compact the imported granular material at a maximum of 300mm lifts. Compact all material placed in the Pipe Zone by mechanical methods. Sand cone tests shall be taken on this layer of backfill.

D. The use of a backhoe-mounted compaction wheel is prohibited within the pipe zone to 300mm above the top of the pipe.

E. Under no circumstances shall consolidation by water settling or water-setting methods (i.e. jetting, diking, etc.) be permitted.

Trench Zone Backfill

A. After the Pipe Zone material has been placed, compacted, approved by the Engineer, backfill in the Trench Zone may proceed.

B. Compaction using vibratory equipment, tamping rollers, pneumatic tire rollers, or other mechanical tampers shall be performed with the type and size of equipment necessary to accomplish the work. The backfill shall be placed in horizontal layers of such depths as are considered proper for the type of compacting equipment being used in relation to the backfill material being placed. Each layer shall be evenly spread, properly moistened, and compacted to the specified relative density. The Contractor shall repair or replace any pipe, fitting, manhole, or structure damaged by the installation operations as directed by the Engineer.

Pavement and Backfill Restoration

A. After the Trench Zone material has been placed, compacted, approved by the Engineer; backfill in the Pavement Zone may proceed as necessary in accordance with the requirements of the agency having jurisdiction.

CONTRACT CHANGE ORDER NO 10257
SHEET 80 OF 115

B. Replace bituminous and concrete pavement, curbs, and sidewalks removed or damaged during construction in accordance with the requirements of the agency having jurisdiction.

Measurement and Payment

DIP, VCP and CIP sewer pipes will be measured by the meter along the centerline of the pipes.

The contract unit price paid per meter for DIP, VCP and CIP sewer pipes shall include full compensation for furnishing all labor, materials, tools, equipment, and incidentals, and for doing all the work involved in installing pipe, complete in place, including structure excavation and structure backfill and connecting new pipe to existing or new facilities as shown on the plans, and as specified in these special provisions, and as directed by the Engineer.

10-1.20 SEWER MANHOLE

This work shall consist of constructing precast concrete manholes complete with cones, frames, covers, gratings, asphalt pavement around the ring, steps, excavating, lagging, backfilling, restoring pavement and other incidental work, necessary or required for a complete, satisfactory installation, in accordance with the details shown on the plans and these special provisions.

Manholes shall be constructed to conform to the improved street surface. In unimproved areas, if the ground surface is below the official grade, the manhole shall be constructed to conform to such official grade unless otherwise indicated on the plans.

Precast Concrete Manholes

This section includes materials, testing, and installation of precast concrete manholes for sewers or for access to below grade water mains and appurtenances.

Reference Standards

The publications listed below form part of this specification to the extent referenced and are referred to in the text by the basic designation only. Reference shall be made to the latest edition of said standards unless otherwise called for.

ASTM A 48	-	Gray Iron Castings
ASTM C 478	-	Precast Reinforced Concrete Manhole Sections
ASTM C 478M	-	Precast Reinforced Concrete Manhole Sections [Metric]
ASTM C 923	-	Resilient Connectors Between Reinforced Concrete Manhole Structures, Pipes and Laterals

Access Manholes for Watermains and Appertunances

A. 1500 mm diameter manholes shall be used, unless otherwise noted on the plans, to access water main appurtenances.

B. A variety of manhole diameters and configurations are utilized on various water main appurtenances and devices.

Sewer Manholes

1500 mm diameter manholes shall be used for sewer applications.

Drop Manholes

1500 mm diameter drop manholes shall be used for sewer applications and constructed only at locations shown on the plans.

Corrosion Protection

A corrosion protection lining and/or coating as described in this specification shall be applied to the interior of manholes for sewer mains 450mm or larger, and to all drop manholes regardless of sewer pipe size.

Damp-Proofing

A damp-proofing material shall be applied to the exterior portions of manholes in accordance with these special provisions and as directed by the Engineer when located at or below the water table or when moisture or seepage is indicated.

Joint Sealing

Joint sealant shall be used to form a continuous watertight seal on the concrete base and between successive precast concrete manhole or vault sections.

Vacuum Testing of Manholes

Vacuum testing of manholes is intended for testing precast concrete manhole sections to demonstrate the integrity of the installed materials and construction procedures.

Manholes

A. Precast concrete manhole components shall be in accordance with ASTM C 478.

B. Manhole components shall be designed for H-20 highway wheel loading and specific site conditions.

C. Manhole bases may be either precast or cast-in-place, as appropriate for the application, with a formed recess shaped to match the first precast shaft section. The manhole base shall extend 250mm below the bottom of the lowest pipe and 150mm above the top of the largest pipe.

D. Manhole shafts shall be fabricated only from precast shaft sections, eccentric cone sections and grade rings.

E. Pipe penetrations for sewer applications shall incorporate a watertight flexible pipe connector or ring-type seal according to the method of manhole construction. Precast manholes shall utilize either an integrally cast embedded pipe connector, or a boot-type connector installed in a circular block out opening in accordance with ASTM C 923. Connections to existing manholes shall utilize a boot-type connector per ASTM C 923 installed in a cored opening. Cast-in-place bases shall incorporate a ring-type seal on the pipe to be embedded in the concrete.

Crushed Rock Base and Backfill Materials

Crushed rock base and backfill materials shall be in conformance with the provisions in "Sewer Pipe" of these special provisions.

Manhole Frames and Covers

A. Manhole frames shall be 900mm in diameter with two concentric covers, made of cast-iron in accordance with ASTM A 48, Class 30. Locking frames and covers may be required as determined by the Engineer.

B. Frames and covers shall be designed for H-20 highway wheel loading.

C. Covers shall have the words "'AGENCY NAME' and 'WATER', 'RECYCLED WATER', or, 'SEWER'" cast into the cover as appropriate to the application. No other lettering will be permitted on the top portion of the cover.

D. Castings shall be smooth, clean, and free from blisters, blowholes, and shrinkage. Mating surfaces of the frame and cover shall be machined to prevent movement of the lid. Frames and covers shall be match marked in sets before shipping to the site.

E. All castings shall be dipped twice in a preparation of asphalt or coal tar and oil applied at a temperature of not less than 143.3 degrees C (290 degrees F) nor more than 154.4 degrees C (310 degrees F) and in such a manner as to form a firm and tenacious coating.

Concrete

Concrete used for manholes and appurtenances shall be in conformance with the provisions in these special provisions.

Joint Sealing Compound

Joint sealing compound shall be a mastic-type material in a flexible rope or rolled form with removable wrapper sized to fit into the key of manhole or vault sections.

Repair Mortar and Epoxy Bonding Agent

CONTRACT CHANGE ORDER NO 69577
SHEET 52 OF 115

Repair mortar and an epoxy bonding agent shall be used to repair minor surface damage to precast sections or cast-in-place manhole bases at the discretion of the Engineer. Repair products shall be in conformance with the provisions in these special provisions.

Mortar

Mortar for use on joints between precast sections and for setting manhole cover frames shall be in conformance with the provisions in these special provisions.

Damp-Proofing

Damp-proofing material shall be in conformance with the provisions in these special provisions.

Work within Existing Manholes

Contractor shall comply with all Federal and State regulations for confined space entry. Work inside confined spaces, as defined by the applicable regulations, shall not be undertaken until all the tests and safety provisions of the Code of Federal Regulations 1910.146, and the General Industry Safety Orders of the California Code of Regulations, Title 8, Section 5159, for confined space entry have been performed and the area is verified as safe to enter.

Earthwork

Manhole excavation, foundation stabilization (if necessary), placement of base material, backfill and compaction shall be performed in conformance with the provisions in "Sewer Pipes" of these special provisions.

Manhole Base

A. The invert of precast and cast-in-place bases shall be hand-worked to provide channels conforming in size to the inside diameter of the piping as indicated on the plans. The channels shall vary uniformly in size and shape from inlet to outlet. The concrete base shall be shaped with a wood float and shall receive a hard steel trowel finish before the concrete sets. A template shall be used to accurately form the level surface that will receive the first precast section.

B. During construction of cast-in-place bases, all sewer mains and stub piping shall be in place, including ring-type seals, before concrete placement. Pipe grade and alignment shall be verified immediately upon placement of concrete to assure that the pipelines are in proper position prior to the concrete taking an initial set. The invert elevation and flow line of piping shall be as shown on the plans. The manhole base shall extend 250mm below the bottom of the lowest pipe and 150mm above the top of the largest pipe.

C. Cast-in-place bases shall set a minimum of 24 hours before the manhole construction is continued. In certain critical situations, the setting time may be reduced upon approval of the Engineer.

Installing Manhole Sections

CONTRACT NO. 04-012024
CONTRACT CHANGE ORDER NO 6951
SHEET 84 OF 115

A. The concrete manhole base and successive precast sections will receive a mastic joint sealing compound prior to setting the precast sections in place. Following the vacuum testing as described in this section, the joints will be mortared and tooled to a smooth finish, free of voids. Note that sewer manholes are to be vacuum tested following assembly of the concrete sections, but prior to mortaring the joints, or backfilling.

B. Assemble the precast sections to the elevation required by the location of the manhole as follows:

1. Paved Areas: Top of cover shall be flush with the finished paving surface.

2. Traveled Way: Top of cover shall be flush with the existing surface where it is in a traveled way.

3. Shoulder Areas: Top of cover shall be 25mm above the existing surface where outside the limits of a traveled way. Vaults shall not be placed in roadside ditches without the prior approval of the Engineer.

4. Unpaved easements: Top of cover shall be 150mm above the ground surface. Guard posts around the vault may be required in this area as directed by the Engineer.

D. Secure the manhole frame to the grade ring with mortar.

E. After the frame is securely set the cover shall be installed. All necessary cleaning of foreign materials from the frames and covers shall be accomplished to ensure a satisfactory fit.

F. Where manholes are to be given a protective coating, they shall be free of seepage and surface moisture.

F. Piping installation adjacent to the manhole and connection to the base or shaft sections shall be performed as shown on the plans. Piping installation into flexible pipe connectors shall be in accordance with the manufacturer's recommendations for assembly, lubricants and limits of deflection.

H. In order to prevent accidental use of the new sewer before completion and acceptance, the new inlet to existing tie-in manhole(s) and the outlet of the first new upstream manhole(s) shall be sealed with expandable plugs. The Engineer shall approve the specific location of these plugs. Plugs shall be removed at the time of final inspection or as directed by the Engineer. Removal of all construction debris and water shall be completed prior to removal of plugs.

I. Brick or mortar bulkheads shall be installed by the Contractor at the manhole end of all unused stub channels over 900mm beyond manhole base. The bulkheads are intended to prevent ponding of sewage and debris in the unused channels until such time as the manhole stub is connected and normal sewage flow can occur.

J. New connections to existing manholes, where stubs have not been provided, shall be made by core drilling through the walls or base as directed by the Engineer. Flexible

CONTRACT CHANGE ORDER NO 16457
SHEET 35 OF 115

seals shall be used for the pipe penetration. Apply a protective epoxy coating to the cored concrete and the ends of any reinforcing steel exposed in accordance with these special provisions.

K. A concrete collar shall be cast around manhole frames.

Damp-Proofing

At the discretion of the Engineer, damp-proofing material shall be applied to the exterior surfaces of manholes in accordance with the manufacturer's recommendations and these special provisions. The material shall be applied to all exterior surfaces below a point 300mm above the water table or indications of seepage or moisture as directed by the Engineer.

Vacuum Testing of Manholes

A. Vacuum testing of manholes is required and shall be performed as directed in the presence of the Engineer.

B. Vacuum testing equipment shall be as manufactured by P.A. Glazier, Inc. or equal.

C. Manholes shall be tested after assembly and prior to mortaring the joints or backfilling. In the case of manholes incorporating a PVC liner and polyurethane coating, the testing is to take place prior to mortaring the joints, welding the liner seams between sections, applying the coating, or backfilling.

D. All lift holes shall be plugged with an approved grout prior to testing.

E. All pipes entering the manhole shall be plugged, and bracing installed, to prevent the plug from being drawn into the manhole.

F. The test head shall be placed inside the top of the cone section and the seal inflated in accordance with the manufacturer's recommendations.

G. A vacuum of 254 mm of mercury shall be drawn. The time shall be measured for the vacuum to drop to 229 mm. The manhole shall pass the test if the time taken for the drop is greater than 60 seconds.

H. If the manhole fails the test, necessary repairs shall be made and the test repeated until acceptable results are obtained. The leak(s) shall be located and repaired according to their nature with material-in-kind.

Pull Testing of PVC-Lined Manholes

PVC-lined manholes shall have field-welded joints pull tested. Field welds shall withstand a pull test of at least 45.4 kg per liner cm, applied perpendicularly to the concrete surface for a period of one minute, without evidence of cracks or separations. This test shall be conducted at a temperature of 21.1 degrees C to 26.7 degrees C (70 degrees F to 80 degrees F) inclusive.

Holiday Testing of PVC-Lined Manholes

PVC-Lined and Polyurethane-coated surfaces shall be holiday tested with an electrical holiday detector as manufactured by Tinker and Rasor (Model AP-W with power pack) with the instrument set at 20,000 volts and used as directed by the Engineer. All imperfections identified on the PVC lining and polyurethane coating shall be repaired with materials-in-kind and the test shall be repeated until no holidays are evident.

Sewer Leakage and Infiltration Testing

This section describes the requirements and procedures for leakage and infiltration testing of gravity sewer systems.

Requirements Prior to Testing

Trenching for all dry utilities such as electrical, telephone and cable television shall be completed prior to performing any tests on the sewer pipe.

Testing

A. Leakage Test: Each section of sewer pipe between two successive manholes, or between a manhole and its corresponding cleanout or end plug, shall be tested for leakage. The sewer laterals to the property line shall be included in the test.

B. Infiltration Test: In addition to the leakage test, an infiltration test shall be made where groundwater is encountered, or evidence exists that ground water has encroached to the elevation of the sewer, and as directed by the Engineer.

C. All tests shall be made in the presence of the Engineer.

D. Testing may be repeated, as directed by the Engineer, if the subsequent construction operations of the Contractor or others may have damaged or affected the structural integrity of the sewer pipe and/or laterals.

E. All tests must be completed before the street or trench is paved, unless otherwise allowed by the Engineer.

F. Vacuum testing of manholes shall be performed in accordance with these special provisions.

Materials

The Contractor shall furnish all equipment and materials required for testing.

Infiltration Test

CONTRACT NO. 04-012024

CONTRACT CHANGE ORDER NO 16951

SHEET 66 OF 115

A. Prior to testing for infiltration, the ends of the sewer pipe section to be tested shall be capped or plugged to prevent the entrance of water, and pumping of groundwater shall be discontinued for at least three days.

B. Any infiltration discovered before completion and acceptance of the sewer shall be corrected. The sewer shall be examined and the source of infiltration eliminated. Following repairs or replacement as necessary, including backfill and compaction, the subject line shall be retested to assure no infiltration.

Pressure Tests for Sewer Force Mains

Pressure tests for sewer force mains shall be in accordance with these special provisions except that the allowable leakage shall be zero (0). All leak points shall be located and stopped. All defective pipe, fittings, valves and other appurtenances discovered shall be removed and replaced with sound material and tests repeated until the leakage is zero (0).

Final Acceptance

The requirements of this section shall be considered acceptable when each sewer section's air leakage rate is less than the maximum allowed, the television inspection is satisfactory, and the water infiltration rate is zero.

Measurement and Payment

Sewer manhole will be measured by each.

The contract unit price paid for sewer manhole shall include full compensation for furnishing all labor, materials, tools, equipment, and incidentals; and for doing all the work involved in constructing sewer manhole, complete in place, including all testing, inspection, furnishing and installing manhole frame and cover, as shown on the plans, as specified in these special provisions, and as directed by the Engineer.

CONTRACT NO. 04-012024

CONTRACT CHANGE ORDER NO 6957

SHEET 87 OF 115

10-1.21 SLOPE PROTECTION

Slope protection shall be placed or constructed in conformance with the provisions in Section 72, "Slope Protection," of the Standard Specifications.

CONTRACT NO. 64-012024

CONTRACT CHANGE ORDER NO 16957

SHEET 86 OF 115

10-1.22 MISCELLANEOUS IRON AND STEEL

Miscellaneous iron and steel shall conform to the provisions in Section 75, "Miscellaneous Metal," of the Standard Specifications .

CONTRACT NO. 04-0120R4

CONTRACT CHANGE ORDER NO 69S1

SHEET 89 OF 115

10-1.23 CHAIN LINK FENCE

Chain link fence shall be Type CL-1.8 and shall conform to the provisions in Section 80, "Fences," of the Standard Specifications.

CONTRACT NO. 04-0120R4

CONTRACT CHANGE ORDER NO 6957

SHEET 90 OF 115

10-1.24 METAL BEAM GUARD RAILING

Metal beam guard railing shall be constructed in conformance with the provisions in Section 83-1, "Railings," of the Standard Specifications and these special provisions.

Line posts shall be wood, steel, or plastic. Blocks shall be wood or plastic.

Metal beam guard railing elements and required backup plates, terminal sections, end caps, and return caps shall conform to the requirements of Type 2 W-Beam as shown in AASHTO Designation: M 180.

CONTRACT NO. 04-012024

CONTRACT CHANGE ORDER NO 6957

SHEET 91 OF 113

CONTRACT NO. 12-412254
CONTRACT CHANGE ORDER NO 16451
SHEET 92 OF 115

ALTERNATIVE FLARED TERMINAL SYSTEM

Alternative flared terminal system shall be furnished and installed as shown on the plans and in conformance with these special provisions.

The allowable alternatives for a flared terminal system shall consist of one of the following or a Department approved equal.

(1) TERMINAL SYSTEM (TYPE FLEAT) - Terminal system (Type FLEAT) shall be a Flared Energy Absorbing Terminal 350 manufactured by Road Systems, Inc., located in Big Spring, Texas, and shall include items detailed for terminal system (Type FLEAT) shown on the plans. The Flared Energy Absorbing Terminal 350 can be obtained from the distributor, Universal Industrial Sales, P.O. Box 699, Pleasant Grove, UT 84062, Telephone (801) 785–0505 or from the distributor, Gregory Highway Products, 4100 13th Street, S.W., Canton, OH 44708, Telephone (330) 477–4800.

(2) TERMINAL SYSTEM (TYPE SRT) - Terminal system (Type SRT) shall be an SRT-350 Slotted Rail Terminal (8-post system) as manufactured by Trinity Industries, Inc., and shall include items detailed for terminal system (Type SRT) shown on the plans. The SRT-350 Slotted Rail Terminal (8-post system) can be obtained from the manufacturer, Trinity Industries, Inc., P.O. Box 99, 950 West 400S, Centerville, UT 84014, Telephone (800) 772–7976.

The Contractor shall provide the Engineer with a Certificate of Compliance from the manufacturer in conformance with the provisions in Section 6-1.07, "Certificates of Compliance," of the Standard Specifications. The Certificate of Compliance shall certify that the terminal systems furnished conform to the contract plans and specifications, conform to the prequalified design and material requirements, and were manufactured in conformance with the approved quality control program.

Terminal systems shall be installed in conformance with the manufacturer's installation instructions and these requirements. Each terminal system installed shall be identified by painting the type of terminal system in neat black letters and figures 60 mm high on the backside of the rail element between system posts numbers 4 and 5.

For terminal system (Type SRT), the steel foundation tubes with soil plates attached shall be, at the Contractor's option, either driven, with or without pilot holes, or placed in drilled holes. Space around the steel foundation tubes shall be backfilled with selected earth, free of rock, placed in layers approximately 100 mm thick and each layer shall be moistened and thoroughly compacted. The wood terminal posts shall be inserted into the steel foundation tubes by hand and shall not be driven. Before the wood terminal posts are inserted, the inside surfaces of the steel foundation tubes to receive the wood posts shall be coated with a grease which will not melt or run at a temperature of 65°C or less. The edges of the wood terminal posts may be slightly rounded to facilitate insertion of the post into the steel foundation tubes.

For terminal system (Type FLEAT), the soil tubes shall be, at the Contractor's option, driven with or without pilot holes, or placed in drilled holes. Space around the steel foundation tubes shall be backfilled with selected earth, free of rock, placed in layers approximately 100 mm thick and each layer shall be moistened and thoroughly compacted. Wood posts shall be inserted into the steel foundation tubes by hand. Before the wood terminal posts are inserted, the inside surfaces of the steel foundation tubes to receive the wood posts shall be coated with a grease which will not melt or run at a temperature of 65°C or less. The edges of the wood posts may be slightly rounded to facilitate insertion of the post into the steel foundation tubes.

Surplus excavated material remaining after the terminal system has been installed shall be disposed of in a uniform manner along the adjacent roadway where designated by the Engineer.

The contract unit price paid for alternative flared terminal system shall include full compensation for furnishing all labor, materials, tools, equipment, and incidentals, and for doing all the work involved in furnishing and installing alternative flared terminal system, complete in place, including excavation, backfill and disposal of surplus material, as shown on the plans, as specified in the Standard Specifications and these special provisions, and as directed by the Engineer.

CONTRACT NO. 04-012024

CONTRACT CHANGE ORDER NO 69572

SHEET 93 OF 115

SECTION 10-2. (BLANK)

SECTION 10-3. SIGNALS, LIGHTING AND ELECTRICAL SYSTEMS

10-3.01 DESCRIPTION

Lighting shall conform to the provisions in Section 86, "Signals, Lighting and Electrical Systems," of the Standard Specifications and these special provisions.

CONTRACT NO. 04-012084

CONTRACT CHANGE ORDER NO 6957

SHEET 94 OF 115

10-3.02 STANDARDS, STEEL PEDESTALS, AND POSTS

Standards, steel pedestals, and posts for lighting standards shall conform to the provisions in Section 86-2.04, "Standards, Steel Pedestals and Posts," of the Standard Specifications, "Steel Structures" of these special provisions, and the following requirements.

Steel bolts not designated on the plans as high-strength (HS) or stainless steel shall be for general applications and shall conform to the requirements in ASTM Designation: A 307.

Handhole reinforcement rings for standards, steel pedestals, and posts shall be continuous around the handholes.

CONTRACT NO. 04-012024

CONTRACT CHANGE ORDER NO 6951

SHEET 95 OF 115

10-3.03 CONDUIT

Conduit to be installed underground shall be Type 3 unless otherwise specified. Detector termination conduits shall be Type 3.

Conduit sizes shown on the plans and specified in the Standard Specifications and these special provisions are referenced to metallic type conduit. When rigid non-metallic conduit is required or allowed, the nominal equivalent industry size shall be used as shown in the following table:

Size Designation for Metallic Type Conduit	Equivalent Size for Rigid Non-metallic Conduit
21	20
27	25
41	40
53	50
63	65
78	75
103	100

When Type 3 conduit is placed in a trench (not in pavement or under portland cement concrete sidewalk), after the bedding material is placed and the conduit is installed, the trench shall be backfilled with commercial quality concrete, containing not less than 250 kg of portland cement per cubic meter, to not less than 100 mm above the conduit before additional backfill material is placed.

After conductors have been installed, the ends of conduits terminating in pull boxes, service equipment enclosures, and controller cabinets shall be sealed with an approved type of sealing compound.

At other locations where conduit is required to be installed under pavement and if a delay to vehicles will not exceed 5 minutes, conduit may be installed by the "Trenching in Pavement Method."

CONTRACT NO. 04-012024

CONTRACT CHANGE ORDER NO 10951

SHEET 94 OF 115

10-3.04 CONDUCTORS AND WIRING

Splices of conductors shall be insulated with heat-shrink tubing of the appropriate size after thoroughly painting the spliced conductors with electrical insulating coating.

Heat-shrink tubing shall be heated as recommended by the manufacturer.

The minimum insulation thickness, at any point, for Type USE, RHH or RHW wire shall be 1.0 mm for conductor sizes No. 14 to No. 10, inclusive, and 1.3 mm for No. 8 to No. 2, inclusive. The minimum insulation thickness, at any point, for Type THW and TW wires shall be 0.69 mm for conductor sizes No. 14 to No. 10, inclusive, 1.02 mm for No. 8, and 1.37 mm for No. 6 to No. 2, inclusive.

CONTRACT NO. 04-012024

CONTRACT CHANGE ORDER NO 16957

SHEET 97 OF 115

10-3.05 BONDING AND GROUNDING

Bonding and grounding shall conform to the provisions in Section 86-2.10, "Bonding and Grounding," of the Standard Specifications and these special provisions.

Bonding jumpers in standards with handholes and traffic pull box lid covers shall be attached by a UL listed lug using 4.5-mm diameter or larger brass or bronze bolts and shall run to the conduit or bonding wire in the adjacent pull box. The grounding jumper shall be visible after the standard has been installed and the mortar pad and cap have been placed on the foundation.

Standards without handholes shall have bonding accomplished by jumpers attached to UL listed ground clamps on each anchor bolt.

For slip base standards or slip base inserts, bonding shall be accomplished by jumpers attached to UL listed ground clamps on each anchor bolt, or a UL listed lug attached to the bottom slip base plate with a 4.5-mm diameter or larger brass or bronze bolt.

Equipment bonding and grounding conductors are required in conduits, except when the conduits contain combinations of loop lead-in cable, fiber optic cable, or signal interconnect cable. A No. 8 minimum, bare copper wire shall run continuously in circuits, except for series lighting circuits, where No. 6 bare copper wire shall run continuously. The bonding wire size shall be increased to match the circuit breaker size in conformance with the Code, or shall be as shown on the plans. Conduits to be installed for future conductors, may omit the copper wire.

Bonding of metallic conduits in metal pull boxes shall be by means of bonding bushings and bonding jumpers connected to the bonding wire running in the conduit system.

CONTRACT NO. 04-012024

CONTRACT CHANGE ORDER NO 6957

SHEET 98 OF 115

10-3.06 SERVICE

Continuous welding of exterior seams in service equipment enclosures is not required.

Type III service equipment enclosures shall be the aluminum type.

Circuit breakers shall be the cable-in/cable-out type, mounted on non-energized clips. All circuit breakers shall be mounted vertically with the up position of the handle being the "ON" position.

Each service shall be provided with up to 2 main circuit breakers which shall disconnect ungrounded service entrance conductors. Where the "Main" circuit breaker consists of 2 circuit breakers as shown on the plans or required in the special provisions, each of the circuit breakers shall have a minimum interrupting capacity of 10 000 A, rms.

CONTRACT NO. 04-012024

CONTRACT CHANGE ORDER NO 10957

SHEET 99 OF 115

10-3.07 PAYMENT

The contract lump sum price or prices paid for lighting shall include highway lighting .

Other roadway lighting on the project shall be considered as included in the contract lump sum price paid for lighting .

Full compensation for hauling and stockpiling electrical materials shall be considered as included in the contract price paid for the item requiring the material to be salvaged and no additional compensation will be allowed therefor.

CONTRACT NO. 04-012024

CONTRACT CHANGE ORDER NO 6957

SHEET 100 OF 115

SECTION 11. (BLANK)

CONTRACT NO. 04-0120R4

CONTRACT CHANGE ORDER NO 16957

SHEET 101 OF 115

Standard Plans List

The Standard Plan sheets applicable to this contract include, but are not limited to those indicated below. Applicable Revised Standard Plans (RSP) and New Standard Plans (NSP) indicated below are included in the project plans as individual Standard Plan sheets.

GENERAL ROAD WORK (Miscellaneous)

A10A	Acronyms and Abbreviations (A-L)
A10B	Acronyms and Abbreviations (M-Z)
A10C	Symbols (Sheet 1 of 2)
A10D	Symbols (Sheet 2 of 2)
A62A	Excavation and Backfill – Miscellaneous Details
A77A1	Metal Beam Guard Railing – Standard Railing Section (Wood Post With Wood Block)
A77B1	Metal Beam Guard Railing – Standard Hardware
A77C1	Metal Beam Guard Railing – Wood Post and Wood Block Details
A77C4	Metal Beam Guard Railing – Typical Railing Delineation and Dike Positioning Details
A77E2	Metal Beam Guard Railing – Typical Layouts for Embankments
A77L1	Metal Beam Railing Terminal System (Type SRT)
A85	Chain Link Fence
A87B	Asphalt Concrete Dikes

GENERAL ROAD WORK (Temporary Facilities)

T58	Temporary Water Pollution Control Details (Temporary Construction Entrance)

SIGNALS, LIGHTING AND ELECTRICAL SYSTEMS

ES-1A	Electrical Systems (Symbols And Abbreviations)
ES-1B	Electrical Systems (Symbols And Abbreviations)
ES-1C	Electrical Systems (Symbols And Abbreviations)
ES-2A	Electrical Systems (Service Equipment)
ES-2C	Electrical Systems (Service Equipment Notes, Type III Series)
ES-2E	Electrical Systems (Service Equipment and Typical Wiring Diagram, Type III – B Series)
ES-3A	Electrical Systems (Controller Cabinet Details)
ES-3C	Electrical Systems (Controller Cabinet Details)
ES-6A	Electrical Systems (Lighting Standards Types 15 and 21)
RSP ES-6E	Electrical Systems (Lighting Standards Type 30 and 31)
ES-6F	Electrical Systems (Lighting Standards Type 30 and 31, Base Plate Details)

Contract No. 04-0120R4

04-SF-80 (KP 12.6/13.2)

CONTRACT PLAN
for
CONTRACT CHANGE ORDER No. 6951

Date 05-18-07

INDEX OF SHEETS

SHEET No.	DESCRIPTION
1	Layout
2-3	Construction Details
4-5	Sanitary Sewer Plans
6	Summary of Quantities
7-11	Electrical Plans
STRUCTURAL PLANS	
12	South-South Detour - TIS 041 Pump Station

CONTRACT NO. 04-0120R4

CONTRACT CHANGE ORDER NO 6951

SHEET 103 OF 115

DIST	COUNTY	ROUTE	TOTAL PROJECT	SHEET NO	SHEETS
04	SF	80	12.6/13.2	1	11

REGISTERED CIVIL ENGINEER 05/18/07

PLANS APPROVAL DATE

REGISTERED PROFESSIONAL ENGINEER Johnny C. Kuo No. C 60036 Exp. 06/30/08 CIVIL STATE OF CALIFORNIA

The State of California or its officers or agents shall not be responsible for the accuracy or completeness of electronic copies of this plan sheet.

Caltrans now has a web site! To get to the web site, go to: http://www.dot.ca.gov

PB AMERICAS, INC.
303 Second St., Suite 700N
San Francisco, CA 94107-1317

Caltrans Metric

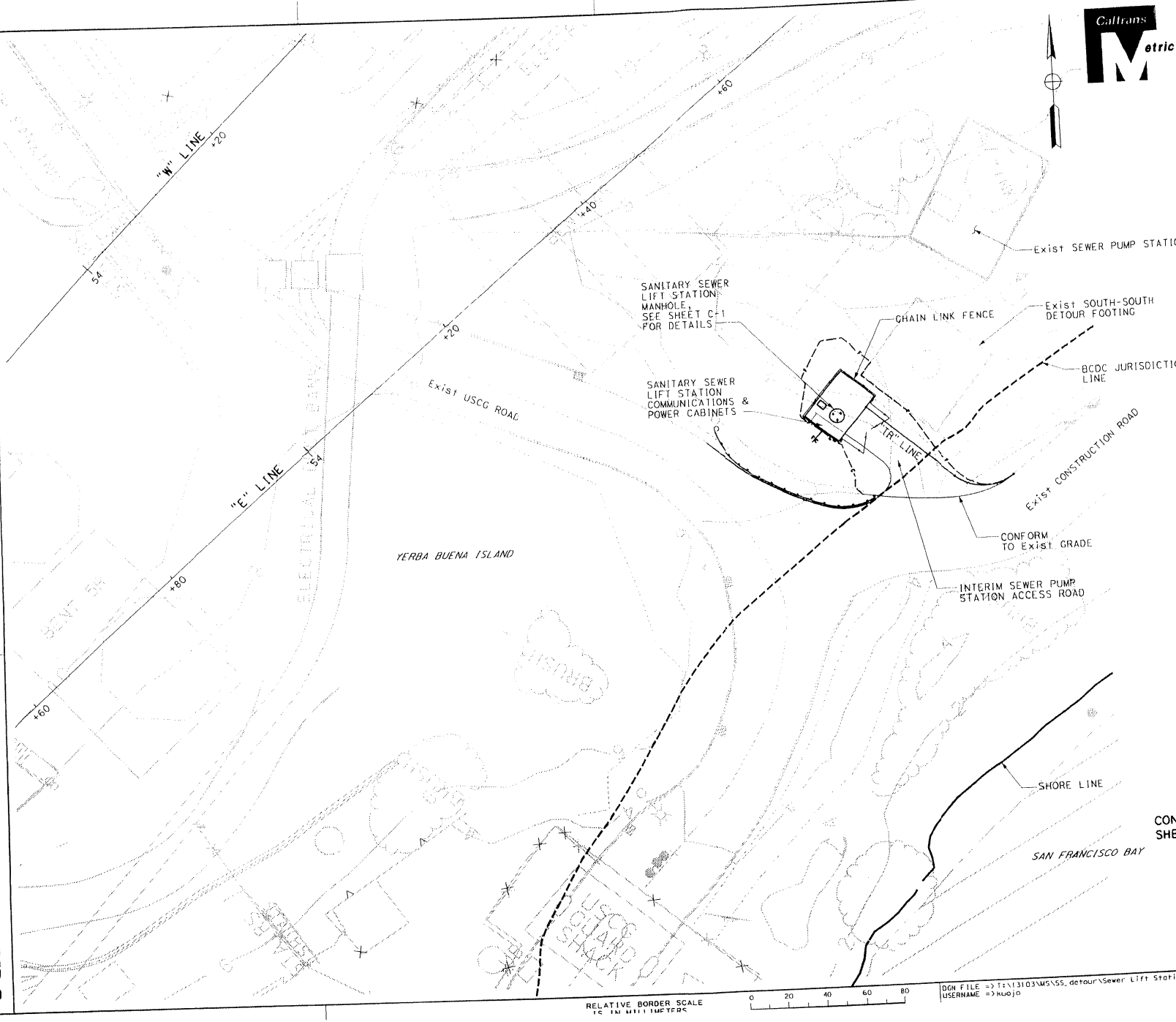

NOTE

1. FOR ADDITIONAL DETAIL SEE SHEETS C-1, SS-1 AND SSP-1.

ABBREVIATION

BCDC - BAY CONSERVATION AND DEVELOPMENT COMMISSION

CONTRACT CHANGE ORDER NO. 04-0120R4 6951
SHEET 104 OF 115

LAYOUT

SCALE: 1:200

L-1

RELATIVE BORDER SCALE IS IN MILLIMETERS 0 20 40 60 80

DGN FILE => T:\13103\MS\SS_detour\Sewer Lift Station\sheet files\ea01.dgn
USERNAME => kuojo

CU 04251

EA 0120R1

STATE OF CALIFORNIA - DEPARTMENT OF TRANSPORTATION

Caltrans

DESIGN OVERSIGHT: HONG WONG

CALCULATED/DESIGNED BY | CHECKED BY | DATE | REVISED BY | DATE REVISED

DIS	COUNTY	ROUTE	PROJECT	NO	SHEETS
04	SF	80	12.6/13.2	2	11

Caltrans Metric

REGISTERED CIVIL ENGINEER 05/18/07

PLANS APPROVAL DATE

REGISTERED PROFESSIONAL ENGINEER Johnny C. Kuo No. C 60036 Exp. 06/30/08 CIVIL STATE OF CALIFORNIA

The State of California or its officers or agents shall not be responsible for the accuracy or completeness of electronic copies of this plan sheet.

Caltrans now has a web site! To get to the web site, go to: http://www.dot.ca.gov

PB AMERICAS, INC.
303 Second St., Suite 700N
San Francisco, CA 94107-1317

CURVE DATA						
No.	R	Δ	T	L	N	E
1	5.00	77°57'14"	4.05	6.80	647357.278	1836164.923
2	2.00	94°38'43"	2.17	3.30	647353.757	1836152.596
3	6.20	63°45'46"	3.86	6.90	647356.699	1836149.599

NOTE

1. INTERIM ACCESS ROAD GRADES TO BE FIELD VERIFIED AND ADJUSTED AS NECESSARY.
2. EXACT LOCATION OF 1.83 m METAL LINE POST SHALL BE DETERMINED BY THE ENGINEER.

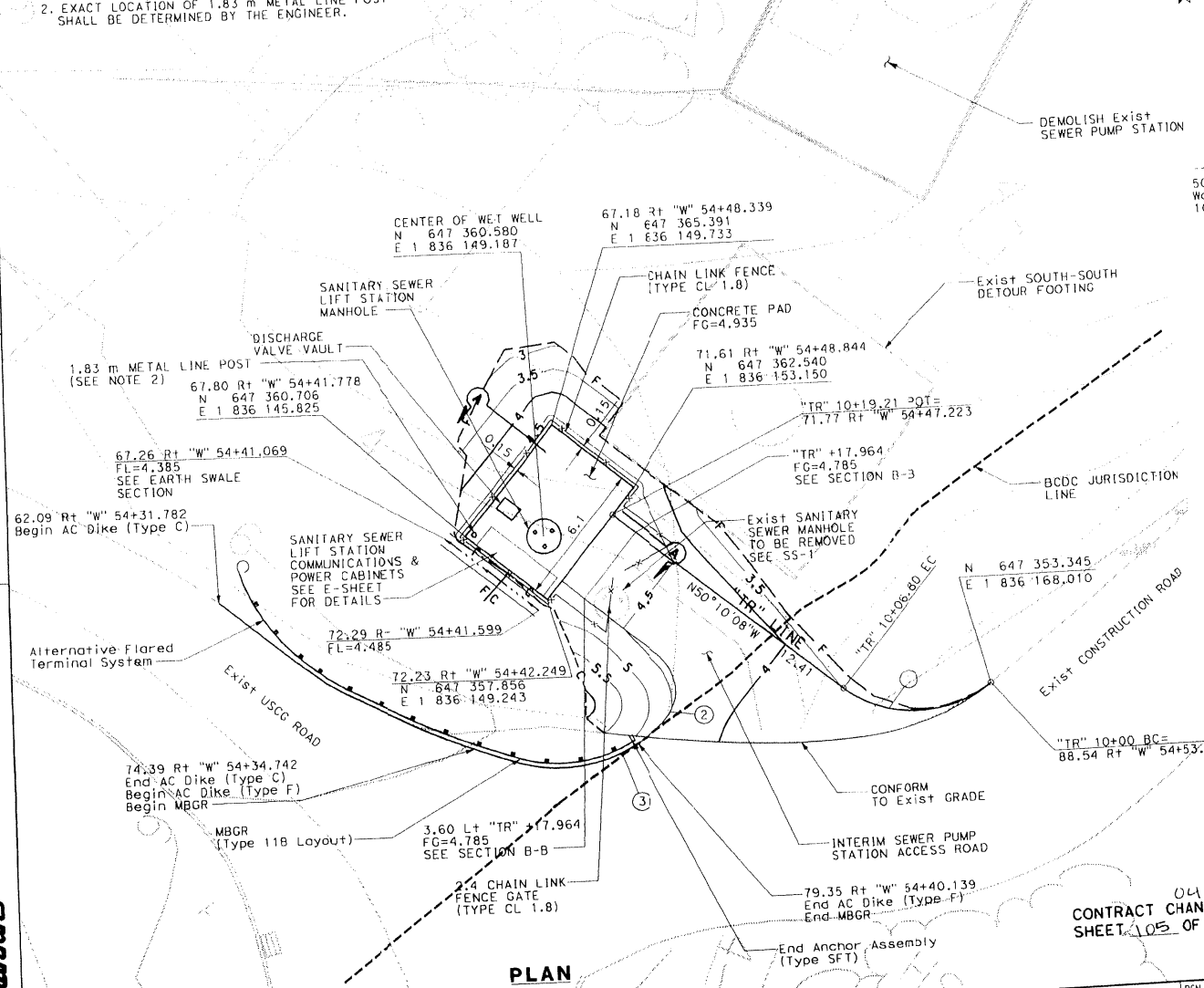

PLAN
SCALE: 1:100

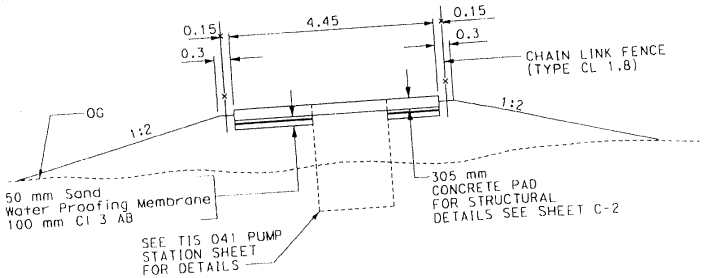

SECTION A-A
NO SCALE

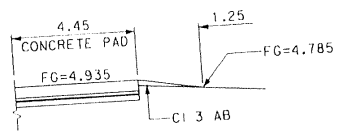

SECTION B-B
(PAVEMENT TRANSITION)
NO SCALE

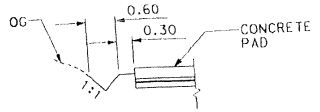

EARTH SWALE SECTION
NO SCALE

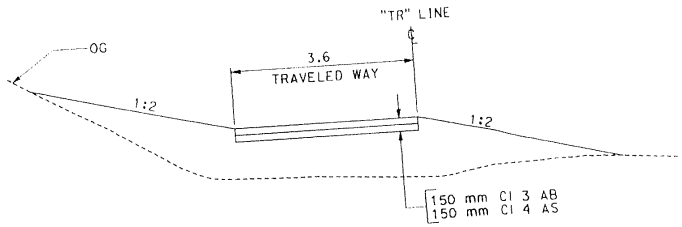

TYPICAL SECTION
(ACCESS ROAD)
NO SCALE

CONSTRUCTION DETAILS
SCALE AS NOTED

04-0120R4
CONTRACT CHANGE ORDER NO. 0452
SHEET 105 OF 115

C-1

STATE OF CALIFORNIA - DEPARTMENT OF TRANSPORTATION
Caltrans

DESIGN OVERSIGHT: HONG WONG
CALCULATED/DESIGNED BY
CHECKED BY
REVISED BY
DATE REVISED
DATE

RELATIVE BORDER SCALE 0 20 40 60 80

DGN FILE => T:\13103\MS\SS_detour\Sewer Lift Station\sheet files\ga01.dgn
USERNAME => kuoio

CU 04251

EA 0120R1

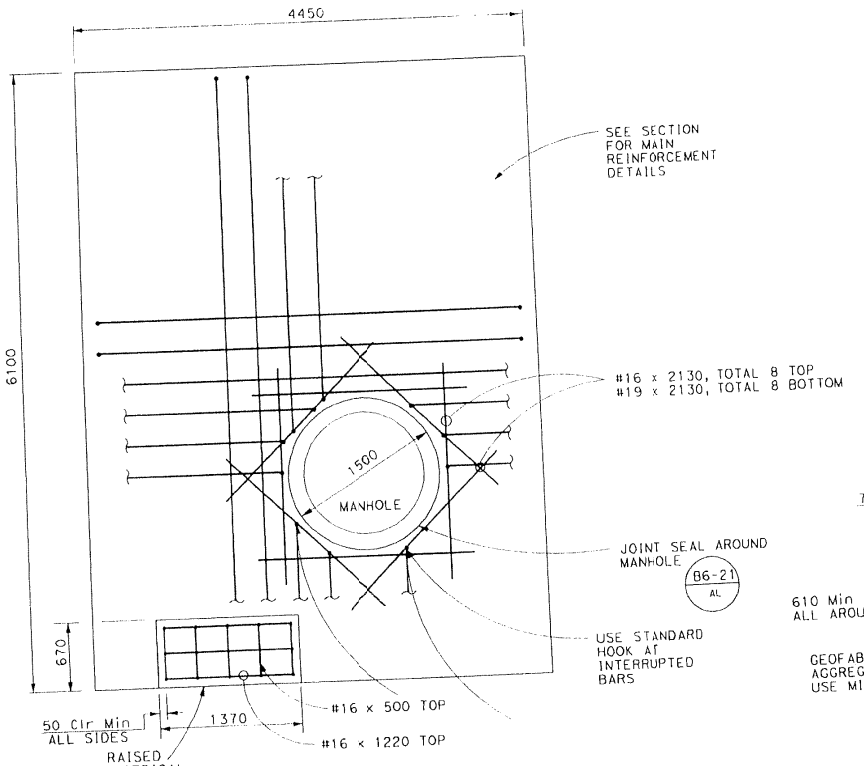

CONCRETE PAD PLAN VIEW

NO SCALE

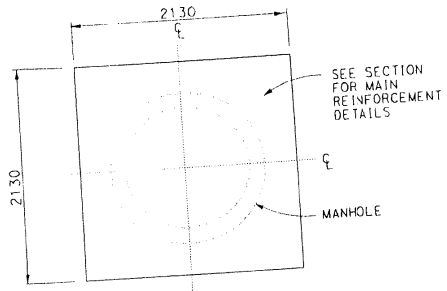

MANHOLE FOUNDATION SLAB PLAN VIEW

NO SCALE

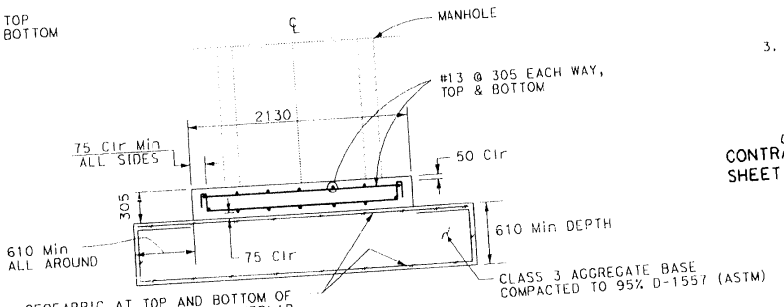

MANHOLE FOUNDATION SLAB SECTION VIEW

NO SCALE

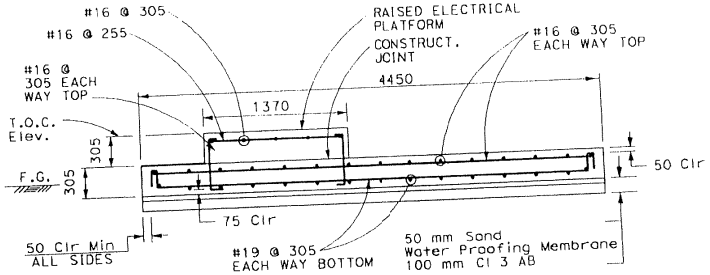

CONCRETE PAD SECTION VIEW

NO SCALE

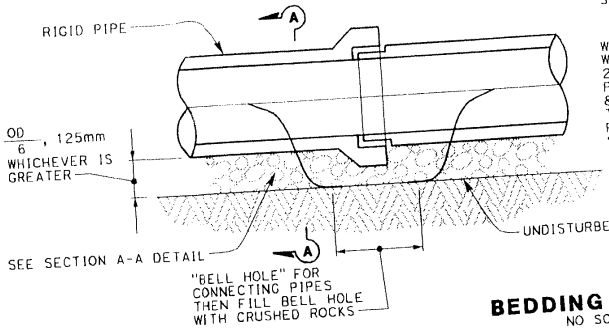

BEDDING DETAIL

NO SCALE

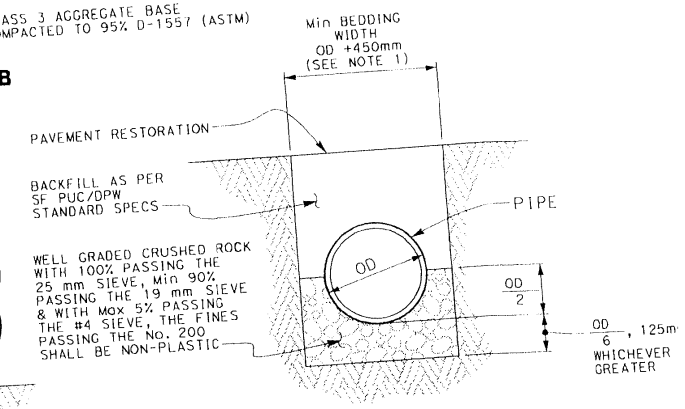

SECTION A-A

CONSTRUCTION DETAILS

SCALE AS NOTED

NOTES:

1. MAXIMUM TRENCH WIDTH SHALL BE LARGER OUTSIDE DIMENSION OF THE NEW OR EXISTING SEWER/STRUCTURE PLUS 900 mm.
2. ALL NEW SEWERS SHALL BE CONSTRUCTED ON CRUSHED ROCK BEDDING AS SHOWN ON BEDDING DETAIL UNLESS OTHERWISE NOTED.
3. THE RAISED ELECTRICAL PLATFORM SHALL BE PLACED UNDER THE ELECTRICAL PANEL. EXACT LOCATION TO BE DETERMINED BY THE ENGINEER.

04-0120R1
CONTRACT CHANGE ORDER NO. 60451
SHEET 106 OF 115

DIST	COUNTY	ROUTE	POST MILES	SHEET	TOTAL SHEETS
04	SF	80	12.6/13.2	3	11

REGISTERED CIVIL ENGINEER — 05/18/01
PLANS APPROVAL DATE
The State of California or its officers or agents shall not be responsible for the accuracy or completeness of electronic copies of this plan sheet.
REGISTERED PROFESSIONAL ENGINEER — Wee Shing Ong — No. 24960 — Exp. 12/31/01 — CIVIL — STATE OF CALIFORNIA

Caltrans now has a web site! To get to the web site, go to: http://www.dot.ca.gov

PB AMERICAS, INC.
303 Second St., Suite 700N
San Francisco, CA 94107-1317

DATE	REVISED BY	DATE REVISED

CALCULATED/ DESIGNED BY	CHECKED BY

DESIGN OVERSIGHT — HONG WONG

STATE OF CALIFORNIA - DEPARTMENT OF TRANSPORTATION
Caltrans

ALL DIMENSIONS ARE IN MILLIMETERS UNLESS OTHERWISE NOTED

RELATIVE BORDER SCALE 0 20 40 60 80

DGN FILE => T:\13103\MS\SS_detour\Sewer Lift Station\sheet files\ge02.dgn
USERNAME => kuojo

CU 04251 | EA 0120R1

C-2

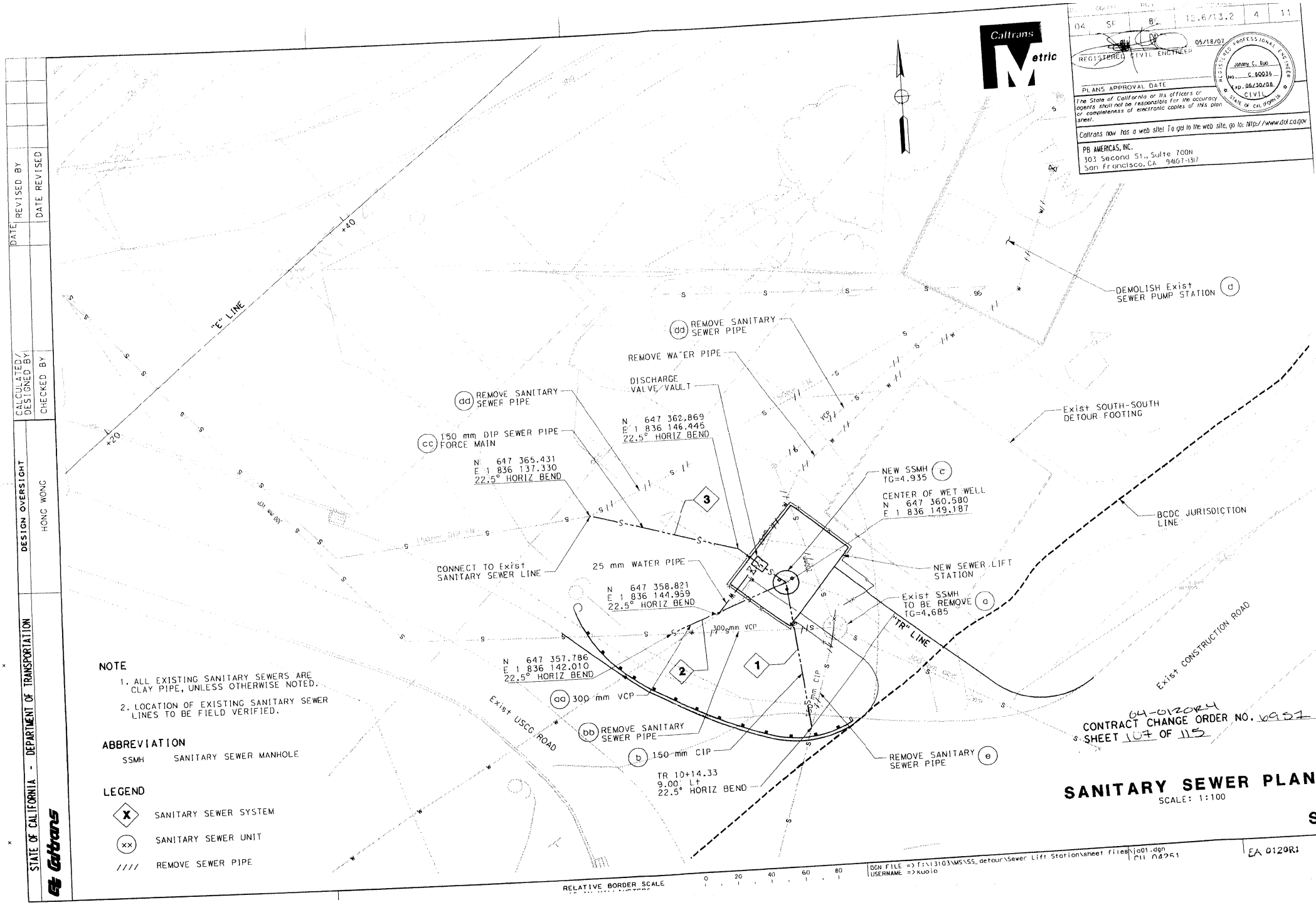

NOTE

1. ALL EXISTING SANITARY SEWERS ARE CLAY PIPE, UNLESS OTHERWISE NOTED.
2. LOCATION OF EXISTING SANITARY SEWER LINES TO BE FIELD VERIFIED.

ABBREVIATION

SSMH SANITARY SEWER MANHOLE

LEGEND

(X) SANITARY SEWER SYSTEM

(xx) SANITARY SEWER UNIT

//// REMOVE SEWER PIPE

04-0120R4

CONTRACT CHANGE ORDER NO. 69571

SHEET 107 OF 115

SANITARY SEWER PLAN

SCALE: 1:100

SS-1

EA 0120R1

DATE	REVISED BY	DATE REVISED

CALCULATED/DESIGNED BY

CHECKED BY

DESIGN OVERSIGHT

HONG WONG

STATE OF CALIFORNIA - DEPARTMENT OF TRANSPORTATION

Caltrans

Caltrans Metric

DGN	REV			
04	SF	B	12.6/13.2	4	11

REGISTERED CIVIL ENGINEER 05/18/07

PLANS APPROVAL DATE

REGISTERED PROFESSIONAL ENGINEER — JOHNNY C. KUO — No. C 60036 — Exp. 06/30/08 — CIVIL — STATE OF CALIFORNIA

The State of California or its officers or agents shall not be responsible for the accuracy or completeness of electronic copies of this plan sheet.

Caltrans now has a web site! To get to the web site, go to: http://www.dot.ca.gov

PB AMERICAS, INC.
303 Second St., Suite 700N
San Francisco, CA 94107-1317

RELATIVE BORDER SCALE 0 20 40 60 80

DGN FILE => T:\13103\MS\SS_detour\Sewer Lift Station\sheet files\ja01.dgn
USERNAME => kuoj

CU 04251

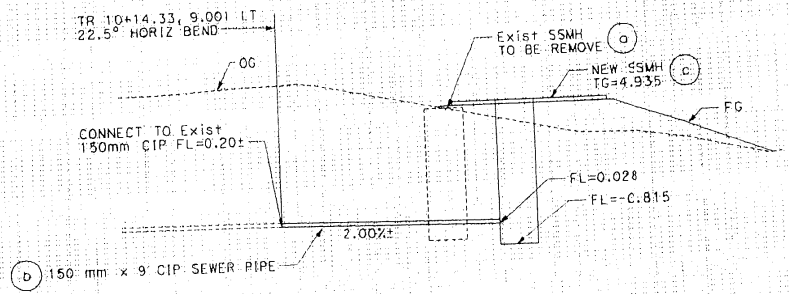

SANITARY SEWER SYSTEM No. 1
PROFILE
SCALE: 1:100 Horiz
1:100 Vert

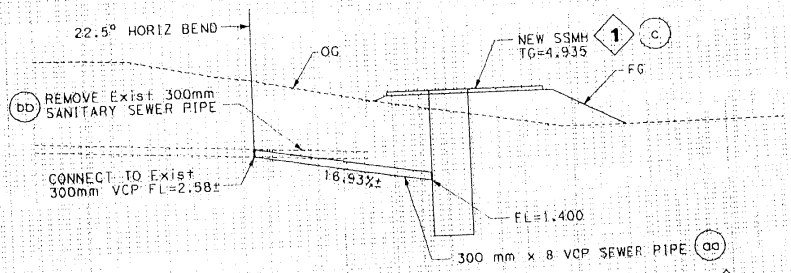

SANITARY SEWER SYSTEM No. 2
PROFILE
SCALE: 1:100 Horiz
1:100 Vert

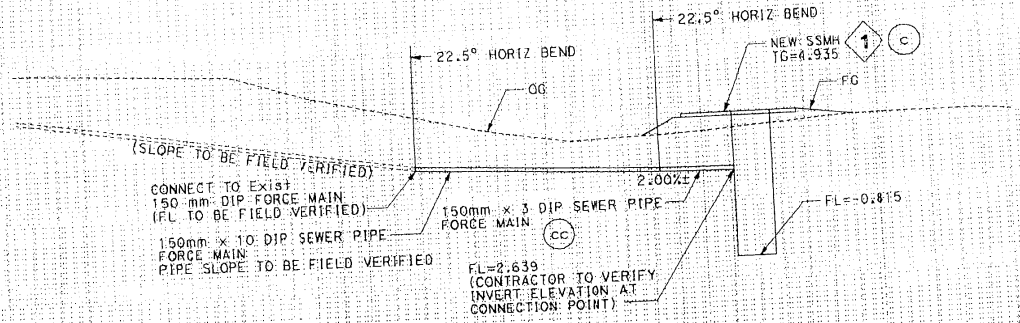

SANITARY SEWER SYSTEM No. 3
PROFILE
SCALE: 1:100 Horiz
1:100 Vert

Caltrans Metric

DIST.	COUNTY	ROUTE	TOTAL PROJECT	SHEET	TOTAL SHEETS
04	ALA	84	12.6/13.2	5	11

REGISTERED CIVIL ENGINEER — 05/18/07

REGISTERED PROFESSIONAL ENGINEER — Johnny C. Kuo — No. C 60035 — Exp. 06/30/08 — CIVIL — STATE OF CALIFORNIA

PLANS APPROVAL DATE

The State of California or its officers or agents shall not be responsible for the accuracy or completeness of electronic copies of this plan sheet.

Caltrans now has a web site! To get to the web site, go to: http://www.dot.ca.gov

PB AMERICAS, INC.
303 Second St., Suite 700N
San Francisco, CA 94107-1317

04-0120R4
CONTRACT CHANGE ORDER NO. 69951
SHEET 1058 OF 1115

SANITARY SEWER PROFILE
SCALE: AS SHOWN

SSP-1

DATE	REVISED BY	DATE REVISED

CALCULATED/DESIGNED BY
CHECKED BY
DESIGN OVERSIGHT
HONG WONG

STATE OF CALIFORNIA - DEPARTMENT OF TRANSPORTATION
Caltrans

Station
m³ Exc
Emb

RELATIVE BORDER SCALE
0 20 40 60 80

DGN FILE => T:\13103\WS\SS_detour\Sewer Lift Station\sheet files\Jb01.dgn
USERNAME => kuojo

CU 04251

EA 0120R1

DIST	COUNTY	ROUTE	POST MILE	PROJECT	SHEET NO	SHEETS
04	SF	80	12.6/13.2		6	11

REGISTERED CIVIL ENGINEER — 05/18/01

PLANS APPROVAL DATE

REGISTERED PROFESSIONAL ENGINEER — Johnny C. Kuo — No. C 60936 — Exp. 08/30/08 — CIVIL — STATE OF CALIFORNIA

The State of California or its officers or agents shall not be responsible for the accuracy or completeness of electronic copies of this plan sheet.

Caltrans now has a web site! To get to the web site, go to: http://www.dot.ca.gov

PB AMERICAS, INC.
303 Second St., Suite 700N
San Francisco, CA 94107-1317

Caltrans Metric

SANITARY SEWER QUANTITIES

SANITARY SEWER PLAN SHEET NO.	SYSTEM NO. ◇	UNIT NO. ○	300mm SANITARY SEWER VCP	150mm DIP FORCE MAIN	150mm CIP SANITARY SEWER PIPE	REMOVE SANITARY SEWER PIPE	SANITARY SEWER MANHOLE	REMOVE Exist SSMH	DEMOLISH SANITARY SEWER PUMP STATION	DESCRIPTION	STATION/OFFSET (FOR MANHOLES ONLY)	SYSTEM NO. ◇	UNIT NO. ○
			M	M	M	M	EA	EA	EA			1	a
SS-1	1	a						1		Remove SSMH	Exist SSMH		b
		b			9					150 mm CIP Sewer Pipe	TR 10+14.33 TO SSMH		c
		c					1			New SSMH	New SSMH		d
		d							1	Demolish Exist Sewer Pump Station	Exist Sewer Pump Station		e
		e				7				Remove 150 mm CIP		2	aa
													bb
SS-1	2	aa	8							300 mm VCP Sewer Pipe			
		bb				10				Remove 300 mm Sanitary Sewer		3	cc
													dd
SS-1	3	cc		13						150 mm DIP Force Main			
		dd				52				Remove 150 mm Force main & 200mm VCP			
	TOTAL		8	13	9	59	1	1	1				

(N): Not a seperate pay item, For Information Only

WATER LINE

LOCATION	25mm Water Pipe	Remove 25mm Water Pipe
	m	m
Sewer Lift Station	4	37
TOTAL	4	37

METAL BEAM GUARD RAILING

LOCATION	Alternative Flared Terminal System	End Anchor Assembly (Type SFT)	Metal Beam Guard Railing (Type 11B Layout)
	EA	EA	m
Sewer Lift Station	1	1	20
TOTAL	1	1	20

STRUCTURE EXCAVATION

LOCATIONS	DEPTH OF EXCAVATION	VOLUME OF EXCAVATION
	m	m3
Sewer Manhole	5	9
Total	5	9

PLACE AC DIKE

LOCATION	Place Asphalt Concrete Dike (Type C)	Place Asphalt Concrete Dike (Type F)
	m	m
Sewer Lift Station	12	11
TOTAL	12	11

ROADWAY QUANTITIES

LOCATION	ASPHALT CONCRETE (TYPE A)	CLASS 3 AGGREGATE BASE	CLASS 4 AGGREGATE SUBBASE	SAND BACKFILL	ROADWAY EXCAVATION	EMBANKMENT (N)
	TONNE	m3	m3	m3	m3	m3
SEWER LIFT STATION ACCESS ROAD	0.68	17.4	8	1.3	7	48
TOTAL	0.68	17.4	8	1.3	7	48

FENCE

LOCATION	CHAIN LINK FENCE (TYPE CL 1.80)	2.4 CHAIN LINK GATE (TYPE CL 1.80)	METAL LINE POST
	M	EA	EA
SEWER LIFT STATION	23	2	1
TOTAL	23	2	1

CONCRETE SLAB

LOCATION	Concrete	Rebars			Joint Sealant	Water Proofing Membrane	Geofabric
		#13	#16	#19			
	m3	m	m	m	m	m2	m2
Sewer Lift Station	9.7	59.7	179.3	188.9	37	25.4	37.3
TOTAL	9.7	59.7	179.3	188.9	37	25.4	37.3

CONTRACT CHANGE ORDER NO. 04-0120R1
SHEET 104 OF 115

SUMMARY OF QUANTITIES

Q-1

STATE OF CALIFORNIA - DEPARTMENT OF TRANSPORTATION — Caltrans

DESIGN OVERSIGHT: HONG WONG

CALCULATED/DESIGNED BY | CHECKED BY

DATE REVISED | REVISED BY | DATE REVISED

RELATIVE BORDER SCALE IS IN MILLIMETERS — 0 20 40 60 80

DGN FILE => T:\13103\MS\SS_detour\Sewer Lift Station\sheet files\ba01.dgn
USERNAME => kuojo

CU 04251 | EA 0120R1

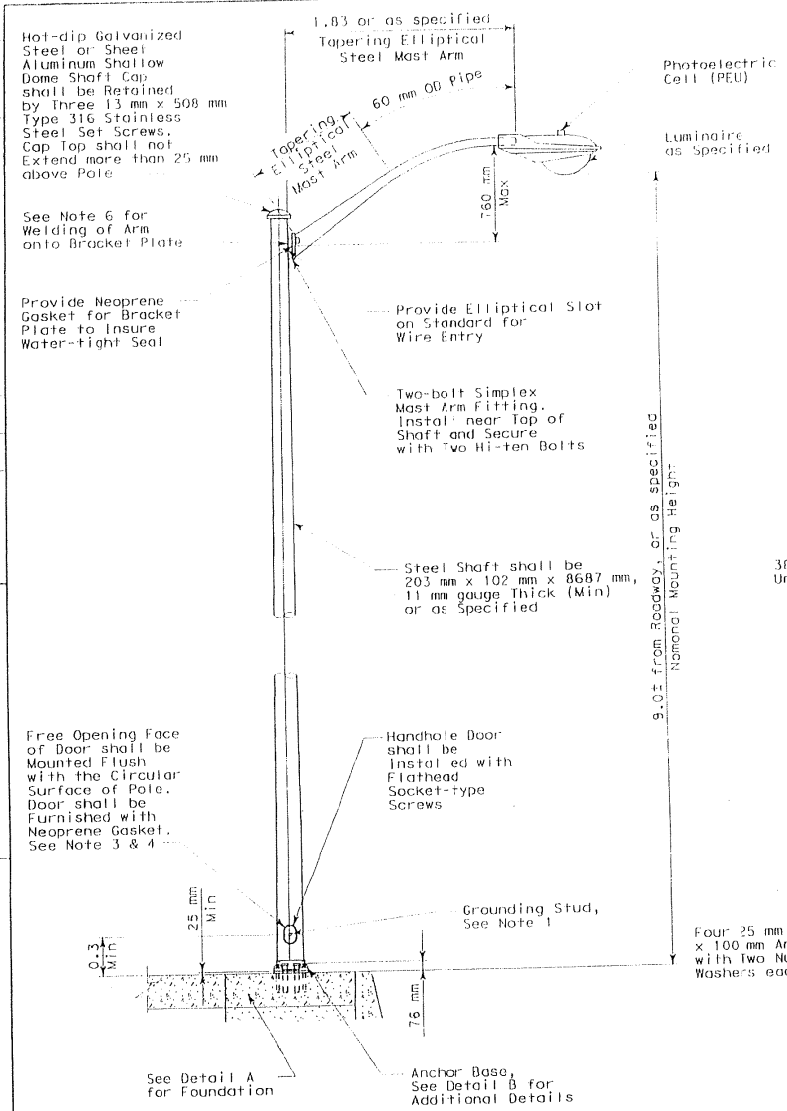

SIDE ELEVATION

DETAIL A

STREET LIGHT ON STEEL SHAFT WITH ELLIPTICAL BRACKET ARM

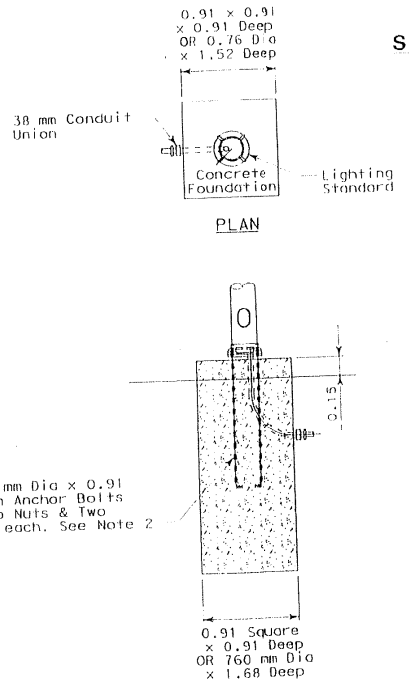

PLAN

ELEVATION

DETAIL A

FOUNDATION FOR STREET LIGHT IN UNPAVED AREA

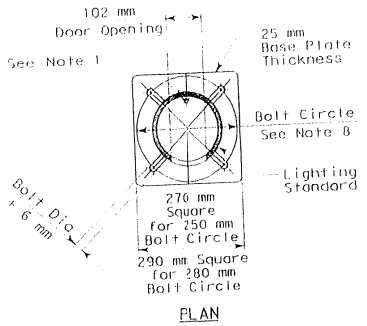

PLAN

DETAIL B

STANDARD ANCHOR BASE

Caltrans Metric

04 SF 80 12.6/11.2

Carol Light 11/30/07
REGISTERED ELECTRICAL ENGINEER DATE

CAROL LIGHT No. 10145 Exp. 09/30/08 ELECTRICAL

PLANS APPROVAL DATE

PARSONS BRINCKERHOFF QUADE & DOUGLAS, INC.

SILVERMAN & LIGHT
IPOPARK AVENUE SUITE 100
EMERYVILLE, CA 94608-3632

The State of California or its officers or agents shall not be responsible for the accuracy or completeness of electronic copies of this plan sheet.

Caltrans now has a web site! To get to the web site, go to http://www.dot.ca.gov

CONTRACT NO. 04-0120R4

CONTRACT CHANGE ORDER NO 16951

SHEET 113 OF 115

NOTES

1. Ground Stud (Welded to Interior Surface of Shaft Opposite Door Opening). Stud shall be 6 mm x 508 mm (Continuosly Threaded) x 19 mm and shall be Furnished with A Type 316 Stainless Steel Nut and A Stainless Steel Shakeproof Washer.
2. Each Anchor Bolt-Threaded Top 200 mm.
3. The Standard, Handhole Cover, Mast Arm, and Anchor Bolts with Nuts & Washers, shall be Hot-dip Galvanized after Fabrication.
4. The Handhole Cover or Door shall have the same Radius of Curvature as the Shaft and when Installed, shall Form a Symmetrical Appearance with the Shaft.
5. The Tapering Elliptical Section shall not be more than Two-thirds the Length of the Mast Arm and shall Taper to the External Diameter of 50 mm Pipe.
6. All Exposed Welds shall be Ground Smooth and shall Conform to Contours of Adjacent Surfaces. All Welds shall have a Finished Depth of 10 mm.
7. Door or Handhole Cover shall be Securely Retained in Place with Two 6 mm x 500 mm Stainless Steel Screws.
8. For Shafts of 7.6 m or Less in Length, the Bolt Circle shall be 250 mm, unless otherwise Noted. For Shafts more than 7.6 m in Length, the Bolt Circle Diameter shall be 280 mm.
9. The Threads of All Fasteners shall be Coated with an Approved Industrial Type of Water-proof Grease Lubricant Containing a High Content of Graphite.
10. The Door or Handlehole Cover Gasket shall be Mounted to the Cover with an Approved Type of Automotive Engine Gasket Cement. The Non-cemented Surface of the Gasket shall be Coated with a Silicone Impregnated Rubber Lubricant.

CITY OF SAN FRANCISCO LIGHT POLE TYPICAL DETAIL

SOUTH-SOUTH DETOUR PUMP STATION

SCALE: 1:20

E-4

ALL DIMENSIONS ARE IN METERS UNLESS OTHERWISE SHOWN

THIS PLAN ACCURATE FOR ELECTRICAL WORK ONLY

FOR REDUCED PLANS ORIGINAL SCALE IS IN MILLIMETERS 0 20 40 60 80

DGN FILE => E04.dgn
USERNAME => bjud

CU 04251

EA 0120R1

STATE OF CALIFORNIA - DEPARTMENT OF TRANSPORTATION

Caltrans

DESIGN OVERSIGHT: Hong Wong

CALCULATED/DESIGNED BY: BJ DATE

CHECKED BY: CL

REVISED BY

DATE REVISED

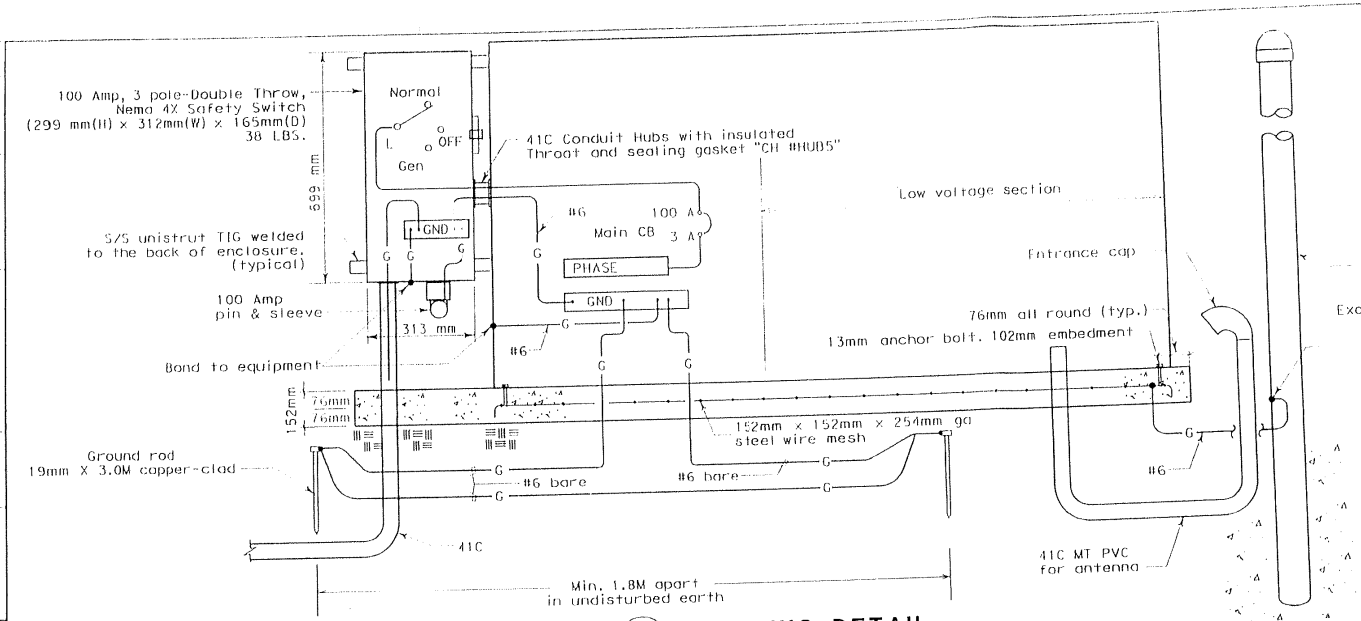

A GROUNDING DETAIL
NTS

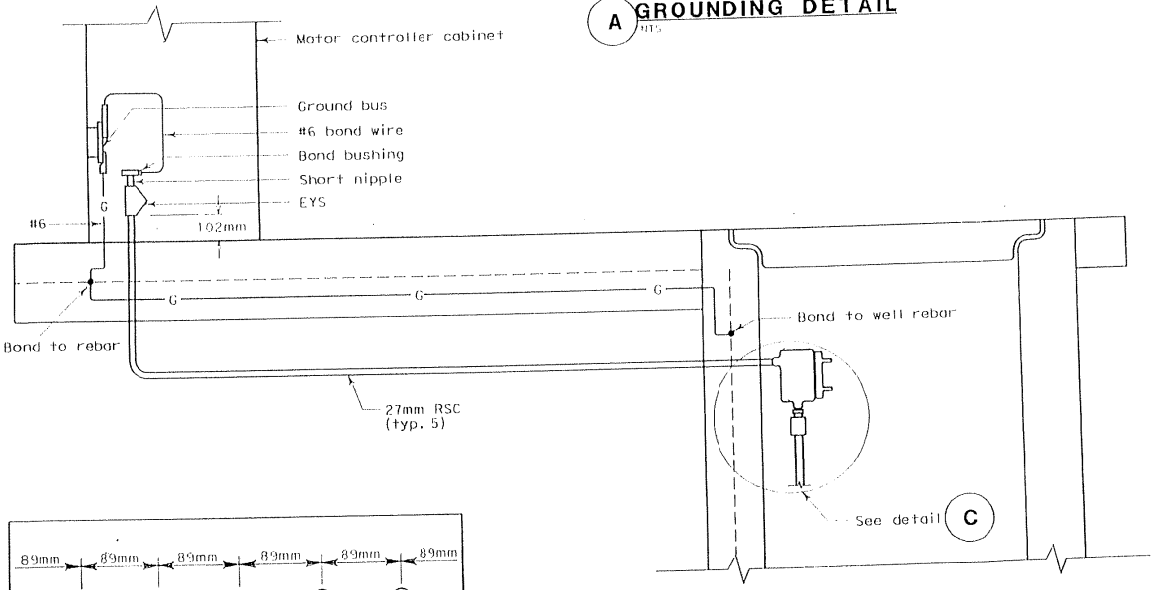

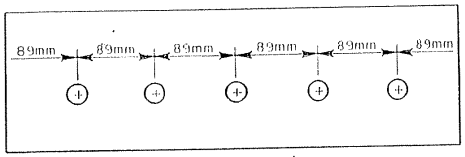

1. Provide 89mm EYS Turning Radius min. separation around each conduit.
2. Coordinate with equipment manufacturer exact loaction of conduit stub-ups.

B TYPICAL WELL INSTALLATION
NTS

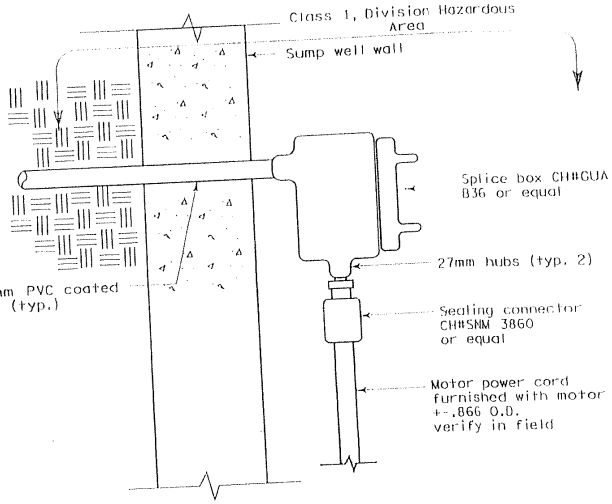

C MOTOR TERMINATION AT WELL
NTS

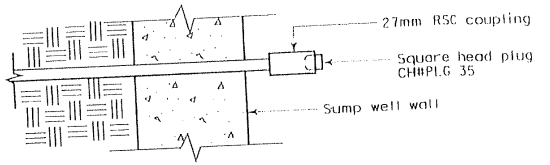

D SPARE CONDUIT TERMINATION AT WELL
NTS

Caltrans Metric

04 SI BO 12.6/13.2

Carol Light 11/30/07
REGISTERED ELECTRICAL ENGINEER DATE

PLANS APPROVAL DATE

CAROL LIGHT No. 10145 Exp. 09/30/08 ELECTRICAL

PARSONS BRINCKERHOFF QUADE & DOUGLAS, INC.
303 Second St., Suite 700N
San Francisco, CA 94107-1317

SILVERMAN & LIGHT
1001 PARK AVENUE - SUITE 100
EMERYVILLE, CA 94608-3632

The State of California or its officers or agents shall not be responsible for the accuracy or completeness of electronic copies of this plan sheet.

Caltrans now has a web site! To get to the web site, go to http://www.dot.ca.gov

ELECTRICAL DETAILS
GROUNDING DETAILS
SOUTH-SOUTH DETOUR PUMP STATION

E-5

STATE OF CALIFORNIA - DEPARTMENT OF TRANSPORTATION
Caltrans

DESIGN OVERSIGHT: Hong Wong
CALCULATED/DESIGNED BY: BJ DATE
CHECKED BY: CL
REVISED BY
DATE REVISED

04-012024
CONTRACT CHANGE ORDER NO. 6951
SHEET 114 OF 115

THIS PLAN ACCURATE FOR ELECTRICAL WORK ONLY

FOR REDUCED PLANS ORIGINAL SCALE IS IN MILLIMETERS 0 20 40 60 80

DGN FILE => E05.dgn
USERNAME => bjud

CU 04251

EA 0120R1

DIST	COUNTY	ROUTE	KILOMETER POST / TOTAL PROJECT	SHEET NO	TOTAL SHEETS
04	SF	80	12.6/13.2	11	11

REGISTERED MECHANICAL ENGINEER

PLANS APPROVAL DATE

The State of California or its officers or agents shall not be responsible for the accuracy or completeness of electronic copies of this plan sheet.

REGISTERED PROFESSIONAL ENGINEER — KENNETH JOHN HARRIS — No. M22087 — Exp. 12-31-03 — MECHANICAL — STATE OF CALIFORNIA

Caltrans Metric

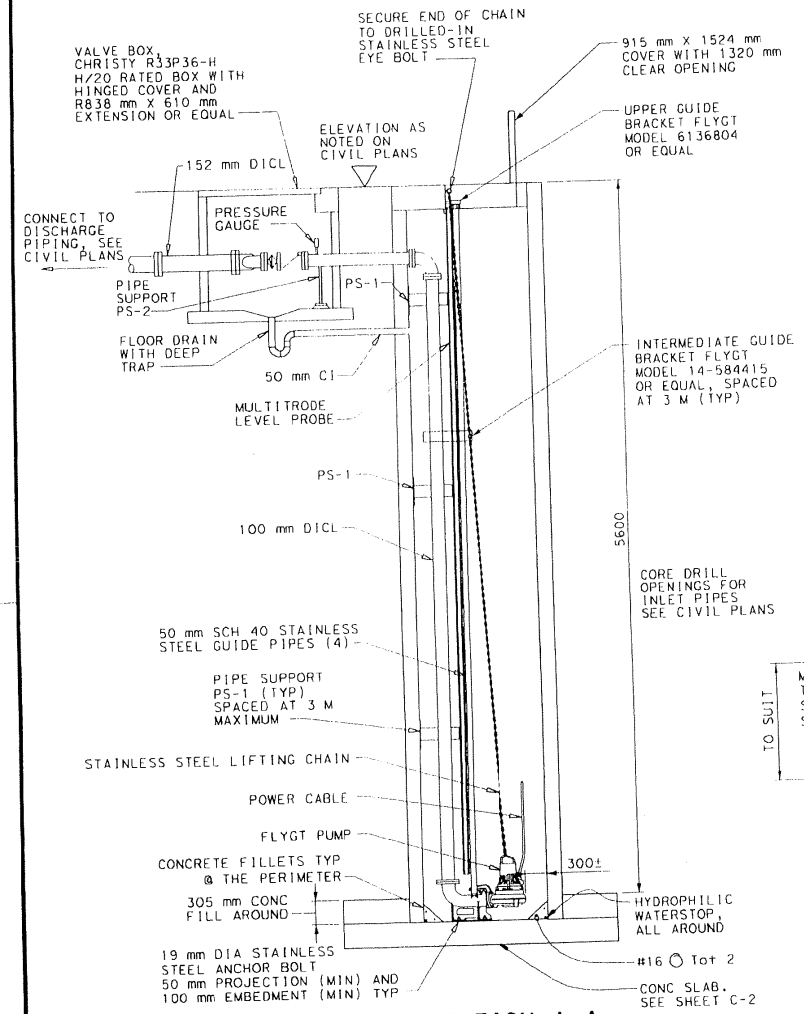

SECTION A-A
SCALE: 1 = 200

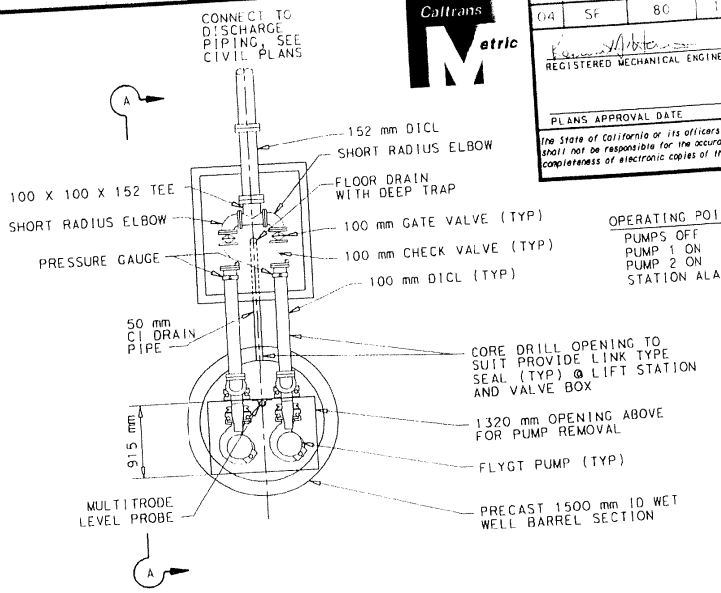

OPERATING POINTS:

PUMPS OFF	900 mm
PUMP 1 ON	2100 mm
PUMP 2 ON	2400 mm
STATION ALARM	2700 mm

NEW PUMP STATION PLAN
SCALE: 1 = 200

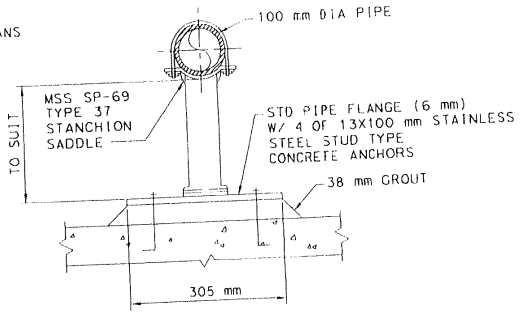

PIPE SUPPORT PS-2
SCALE : 1 = 50

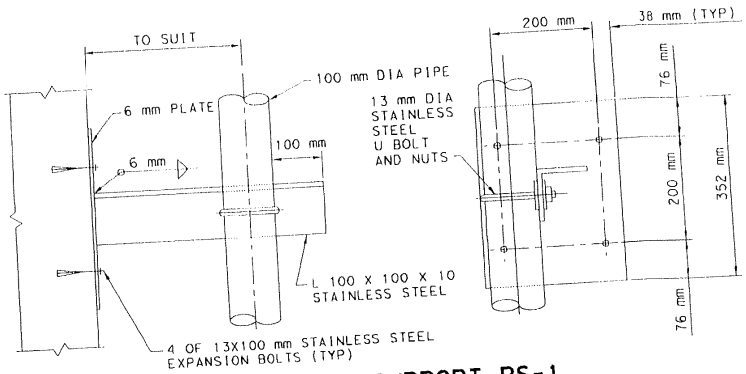

PIPE SUPPORT PS-1
SCALE : 1 = 50

CONTRACT CHANGE ORDER NO. 04-012024 9957

SHEET 115 OF 115

ALL DIMENSIONS ARE IN MILLIMETERS UNLESS OTHERWISE SHOWN

DESIGN OVERSIGHT		DESIGN	BY N. Harris	CHECKED B Melvin	PREPARED FOR THE STATE OF CALIFORNIA DEPARTMENT OF TRANSPORTATION
SIGN OFF DATE		DETAILS	BY K King	CHECKED	PROJECT ENGINEER
DESIGN DETAIL SHEET (METRIC) REV. 3/1/98		QUANTITIES	BY	CHECKED	CU 04251 EA 0120R1

ORIGINAL SCALE IN MILLIMETERS FOR REDUCED PLANS 0 10 20 30 40 50 60 70 80 90 100

FILE => I:\1310\MS\SS_detour\Sewer Lift Station\sheet files\m-01.dgn

BRIDGE NO.	SOUTH-SOUTH DETOUR
34-0006 (TEMP)	TIS 041 PUMP STATION
KILOMETER POST 12.6	
DISREGARD PRINTS BEARING EARLIER REVISION DATES	REVISION DATES (PRELIMINARY STAGE ONLY) 2/19/01

SHEET 1

STATE OF CALIFORNIA - DEPARTMENT OF TRANSPORTATION

CONTRACT CHANGE ORDER MEMORANDUM

TO: MIKE FORNER / DENNIS TURCHON	FILE: E.A. 04 - 0120R4
	CO-RTE-PM SF-80-12.6/13.2
FROM: BILL CASEY	FED. NO. ACBRIM-080-1(097)N
CCO#: 69 SUPPLEMENT#: 1 Category Code: CAXX	CONTINGENCY BALANCE (incl. this change) $88,537,984.82
COST: $499,996.00 INCREASE ☑ DECREASE ☐	HEADQUARTERS APPROVAL REQUIRED? ☑ YES ☐ NO
SUPPLEMENTAL FUNDS PROVIDED: $0.00	IS THIS REQUEST IN ACCORDANCE WITH ENVIRONMENTAL DOCUMENTS? ☑ YES ☐ NO
CCO DESCRIPTION: Pump Station Construction	**PROJECT DESCRIPTION:** CONSTRUCT ROUTE 80 TEMP BYPASS STRUCTURE

Original Contract Time:	Time Adj. This Change:	Previously Approved CCO Time Adjustments:	Percentage Time Adjusted: (including this change)	Total # of Unreconciled Deferred Time CCO(s): (including this change)
475 Day(s)	DEF Day(s)	1195 Day(s)	252 %	8

THIS CHANGE ORDER PROVIDES FOR:

the construction of a sanitary sewer lift station in accordance with sheets 1 through 115 of this change order.

This contract provides for the construction of a temporary detour for both eastbound and westbound I-80 traffic that allows for the tie in of the east span of the new San Francisco Oakland Bay Bridge (SFOBB) to Yerba Buena Island.

A December 14, 2006 Department strategy memorandum, approved by Tony Anziano, Toll Bridge Program Manager, and Richard Land, Chief Engineer, recommended that the Department assume the design responsibility for the East Tie-In (ETI) structure. Based on this memorandum, the design of the structure was changed from a design that incorporated the existing steel truss bridge with the new structure to a design that replaces the existing structure with a new structure (roll out / roll in). As a consequence of the change, the existing sanitary sewer lift station on Yerba Buena Island which services the USCG base, is in conflict with Bent 52A of the East Tie-In (ETI) roll-out/roll-in design. San Francisco Public Utilities Commission (SFPUC) owns and maintains the pump station.

In order to resolve this conflict, the Department has developed plans and specifications to construct a new sanitary sewer lift station, and demolish the existing one. SFPUC has reviewed and agreed to this design.

The initial costs for this work have already been compensated for in Contract Change Order No. 69-S0, including procurement of equipment and generation of shop drawings for the sanitary sewer lift station.

This contract change order provides for the completion of the remainder of the work involved in the pump station, including installation of new pump station, installation of Nema 4x pump controller panel enclosure, installation of a light pole, disconnection of the existing lift pump controller and turned over to the SFPUC Waste Water Division, grading the sewer pump station access road, installation of metal beam guard railing and chain link fencing for the new pump station access road, and removal of the existing pump station and sewer pipes as specified in the special provisions of this contract change order.

For this work the Contractor will be compensated at the agreed lump sum of $499,996.00, which will be financed from the contract's contingency funds. A cost analysis is on file.

Any time adjustments relating to this work will be deferred as it may impact the controlling operation.

Maintenance concurrence is not required as the SFPUC will maintain this facility. SFPUC has concurred with procurement and construction submittals.

Bob Zandipour, Branch Chief Office of Toll Bridge Design requested this change on 03/19/07. Approval of the change order is recommended by the Resident Engineer.

Authority to proceed with this work was granted by HQ Construction on 10/03/07. However, due to numerous design revisions the contractor was never directed to proceed.

ADA Notice: For individuals with sensory disabilities, this document is available in alternate formats. For information call: (916) 654-6410 or TDD (916) 654-3880 or write Records and Forms Management, 1120 N Street, MS-89, Sacramento, CA 95814.

CONCURRED BY:			
Construction Engineer:	Raoul Maltez	Date	12/4/07
Bridge Engineer:	Mike Whiteside	Date	5/25/07
Project Engineer:	Bob Zandipour	Date	3/19/07
Project Manager:	Alec Melkonians	Date	6/15/07
FHWA Rep.:		Date	
Environmental:		Date	
Other (specify):	Kris Kilgore, SFPUC	Date	11/6/07
Other (specify):		Date	
District Prior Approval By:		Date	
HQ (Issue Approve) By:	Ken Darby, HQ CCO Engineer	Date	2-13-08
Resident Engineer's Signature:		Date	2-11-08

ESTIMATE OF COST

	THIS REQUEST	TOTAL TO DATE
ITEMS	$0.00	$0.00
FORCE ACCOUNT	$0.00	$0.00
AGREED PRICE	$499,996.00	$611,276.00
ADJUSTMENT	$0.00	$0.00
TOTAL	$499,996.00	$611,276.00

FEDERAL PARTICIPATION

☐ PARTICIPATING ☐ PARTICIPATING IN PART ☐ NONE
☐ NON-PARTICIPATING (MAINTENANCE) ☑ NON-PARTICIPATING

FEDERAL SEGREGATION (if more than one Funding Source or P.I.P. type)
☑ CCO FUNDED PER CONTRACT ☐ CCO FUNDED AS FOLLOWS

FEDERAL FUNDING SOURCE	PERCENT

ADA Notice: For individuals with sensory disabilities, this document is available in alternate formats. For information call: (916) 654-6410 or TDD (916) 654-3880 or write Records and Forms Management, 1120 N Street, MS-89, Sacramento, CA 95814.

STATE OF CALIFORNIA - DEPARTMENT OF TRANSPORTATION

CONTRACT CHANGE ORDER

Change Requested by: Engineer

CCO 69	Suppl. No. 2	Contract No. 04 - 0120R4	Road SF-80-12.6/13.2	FED. AID LOC.: ACBRIM-080-1(097)N

To: CC MYERS INC

You are directed to make the following changes from the plans and specifications or do the following described work not included in the plans and specifications for this contract. ***NOTE: This change order is not effective until approved by the Engineer.***

Description of work to be done, estimate of quantities and prices to be paid. (Segregate between additional work at contract price, agreed price and force account.) Unless otherwise stated, rates for rental of equipment cover only such time as equipment is actually used and no allowance will be made for idle time. This last percentage shown is the net accumulated increase or decrease from the original quantity in the Engineer's Estimate.

Extra Work at Lump Sum:

Compensate the Contractor for additional work performed in the construction of the Sanitary Sewer Lift Station (Pump Station) not identified in CCO No. 69 Sup. 1.

This additional work consists of field work adjustments not contemplated in the CCO plans during the sewer pump station construction. It includes installing additional pipe & fitting materials at the site.

For this work, the Contractor shall be compensated at a lump sum price of $8,953.12. This sum constitutes full and final compensation of your request for compensation as stated in your Document No. 215-STL.00370 dated April 21, 2008 and Document No. 215-STL.00448 dated February 4, 2009, including markups, for all costs associated with the work of this change.

Total Cost of Extra Work at Lump Sum $8,953.12

Estimated Cost: **Increase** ☑ **Decrease** ☐ **$8,953.12**

By reason of this order the time of completion will be adjusted as follows: 0 days

Submitted by

Signature	Resident Engineer	Date
	BILL CASEY	2-24-09

Approval Recommended by

Signature	Area Construction Manager	Date
Deanna Vilcheck	DEANNA VILCHECK	2/25/09

Engineer Approval by

Signature	Area Construction Manager	Date
Deanna Vilcheck	DEANNA VILCHECK	4/8/09

We the undersigned contractor, have given careful consideration to the change proposed and agree, if this proposal is approved, that we will provide all equipment, furnish the materials, except as may otherwise be noted above, and perform all services necessary for the work above specified, and will accept as full payment therefor the prices shown above.

NOTE: If you, the contractor, do not sign acceptance of this order, your attention is directed to the requirements of the specifications as to proceeding with the ordered work and filing a written protest within the time therein specified.

Contractor Acceptance by

Signature	(Print name and title)	Date
	STEVE FRANCIS, CHIEF ESTIMATOR	3-6-09

CONTRACT CHANGE ORDER

Change Requested by: Engineer

CCO: 69	Suppl. No. 3	Contract No. 04 - 0120R4	Road SF-80-12.6/13.2	FED. AID LOC.:

To: **CC MYERS INC**

You are directed to make the following changes from the plans and specifications or do the following described work not included in the plans and specifications for this contract. ***NOTE: This change order is not effective until approved by the Engineer.***

Description of work to be done, estimate of quantities and prices to be paid. (Segregate between additional work at contract price, agreed price and force account.) Unless otherwise stated, rates for rental of equipment cover only such time as equipment is actually used and no allowance will be made for idle time. This last percentage shown is the net accumulated increase or decrease from the original quantity in the Engineer's Estimate.

Adjustment of Compensation at Lump Sum:

Eliminate the following 7 items of work pertaining to the construction of the pump station that was specified under Sheet 105 of Change Order No. 69, Supplement No. 1:

1)Installation of Chain Link Fence (Type CL 1.8), and 2.4 Chain Link Fence Gate (Type CL 1.8)
2)Installation of AC Dike (Type C) and AC Dike (Type F)
3)Installation of Alternative Flared Terminal System
4)Installation of End Anchor Assembly (Type SFT)
5)Installation of Metal Beam Guard Rail (Type 11B Layout)
6)Placement of embankment and earth swale

Install Temporary Fence (Type CL 1.8) around the pump station and access road to the pump station as shown on Page No. 2 of this change order.

For these eliminated and added works, the Contractor shall credit the Department an agreed lump sum of $73,930.00 which constitutes full and final compensation, including all markups, for the net cost savings associated with this change.

The Contractor shall furnish all materials required for the construction of the chain Link Fence (Type CL 1.8), 2.4 Chain Link Fence Gate (Type CL 1.8), Alternative Flared Terminal System, End Anchor Assembly (Type SFT) and Metal Beam Guard Rail (Type 11B Layout) for the work specified under Change Order No. 69, Supplement No. 1, that were purchased prior to the elimination of these works under this change order, to the project site for future use on a subsequent contract. Compensation for furnishing this material is included in the lump sum credit being provided under this change order.

Cost of Adjustment of Compensation at Agreed Lump Sum.....($73,930.00) (Credit)

Estimated Cost: Increase ☐ **Decrease** ☑ **($73,930.00)**

By reason of this order the time of completion will be adjusted as follows: 0 days

Submitted by		
Signature J Balderramos	**Resident Engineer** JEANNIE BALDERRAMOS	**Date** 9-27-10
Approval Recommended by		
Signature Michael Frame	**Area Construction Manager** for DEANNA VILCHECK	**Date** 9-27-10
Engineer Approval by		
Signature Deanna Vilcheck	**Area Construction Manager** DEANNA VILCHECK	**Date** 10/12/10

We the undersigned contractor, have given careful consideration to the change proposed and agree, if this proposal is approved, that we will provide all equipment, furnish the materials, except as may otherwise be noted above, and perform all services necessary for the work above specified, and will accept as full payment therefor the prices shown above.

NOTE: If you, the contractor, do not sign acceptance of this order, your attention is directed to the requirements of the specifications as to proceeding with the ordered work and filing a written protest within the time therein specified.

Contractor Acceptance by		
Signature	**(Print name and title)** **Steve Francis, Chief Estimator**	**Date** 10 12 10

REGISTERED PROFESSIONAL ENGINEER
DOUGLAS A. JOHNSON
No. C 52971
Exp. 12/31/19
CIVIL
STATE OF CALIFORNIA

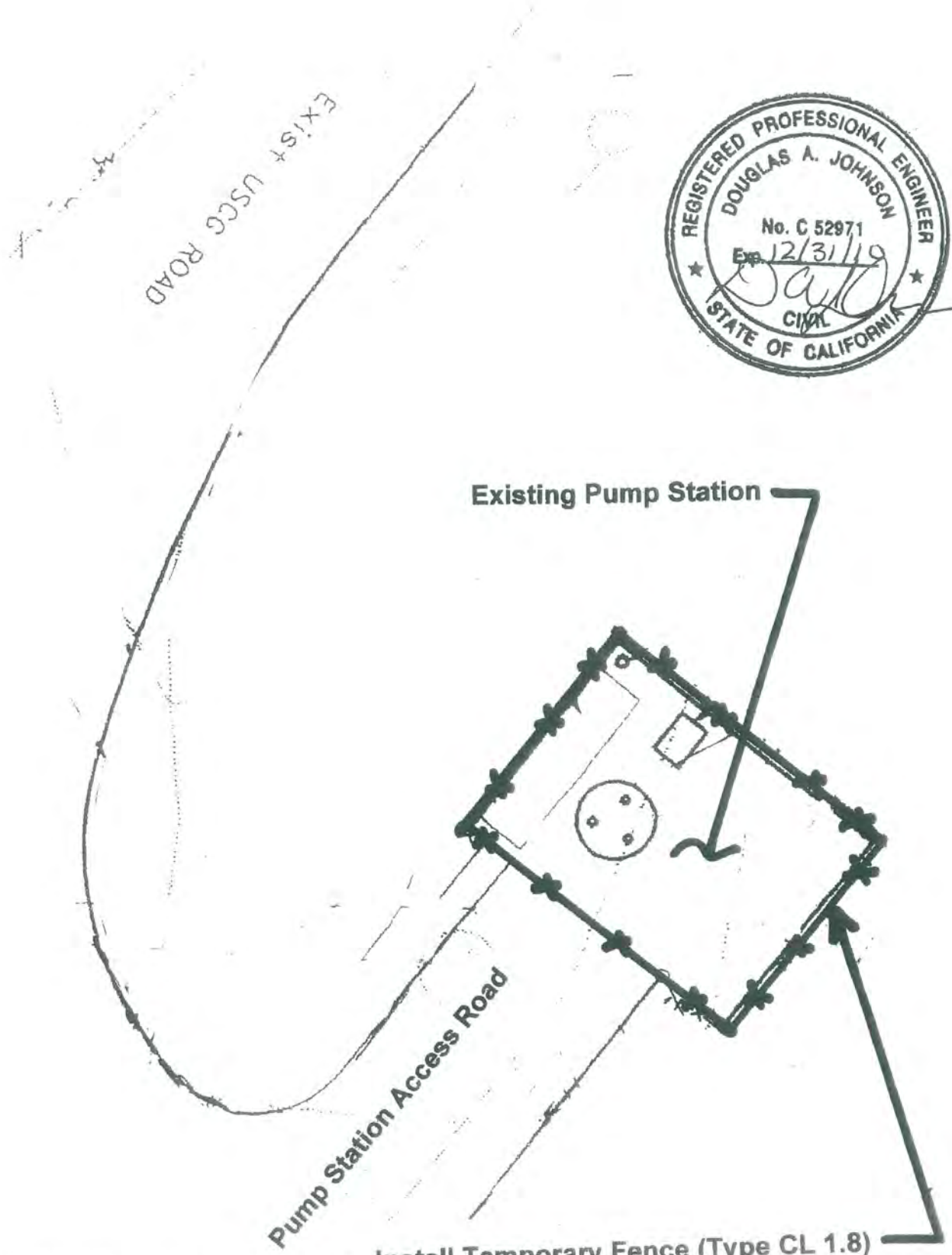

CONTRACT NO. 04-0120R4

CONTRACT CHANGE ORDER NO 69 SS

SHEET 2 of 2

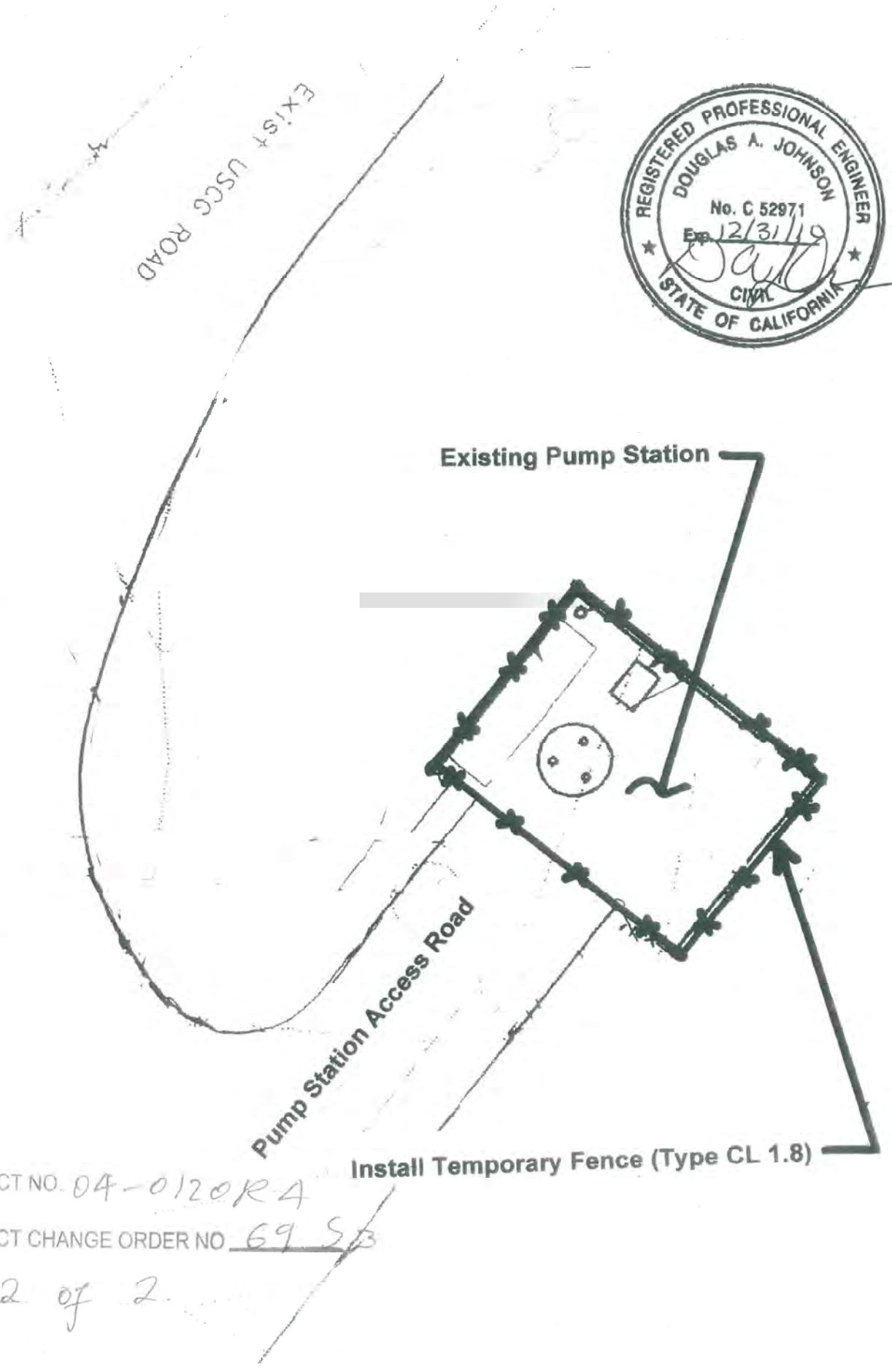

REGISTERED PROFESSIONAL ENGINEER
DOUGLAS A. JOHNSON
No. C 52971
Exp. 12/31/19
CIVIL
STATE OF CALIFORNIA

CONTRACT NO. 04-0120R4

CONTRACT CHANGE ORDER NO 69 SB

SHEET 2 of 2

STATE OF CALIFORNIA - DEPARTMENT OF TRANSPORTATION

CONTRACT CHANGE ORDER

Change Requested by: Engineer

CCO 70	Suppl. No. 0	Contract No. 04 - 0120R4	Road SF-80-12.6/13.2	FED. AID LOC.: ACBRIM-080-1(097)N

To: CC MYERS INC

You are directed to make the following changes from the plans and specifications or do the following described work not included in the plans and specifications for this contract. ***NOTE: This change order is not effective until approved by the Engineer.***

Description of work to be done, estimate of quantities and prices to be paid. (Segregate between additional work at contract price, agreed price and force account.) Unless otherwise stated, rates for rental of equipment cover only such time as equipment is actually used and no allowance will be made for idle time. This last percentage shown is the net accumulated increase or decrease from the original quantity in the Engineer's Estimate.

Extra Work at Force Account:

As authorized by the Engineer, and in accordance with Section 5-1.01, "Working Drawings", and Section 5-1.02 "Integrated Shop Drawings" of the Special Provisions for Contract Change Order No. 64, provide integrated shop drawings (ISD) for the footings, columns, and bent caps for the YBI Transition Structures, Bridge Nos. 34-0006 L/R, at Bent W3R, Bent W4, Bent W5, Bent W6 and Bent W7 and for the YBI EB On-Ramp Structure, Bridge No. 34-0006 R Bent W7. These ISD drawings shall resolve conflicts between reinforcing, prestress ducting, utility conduits, and other embeds in the column to footing interfaces and column to bent cap interfaces.

This work shall be completed prior to the start of column reinforcing steel fabrication. The Contractor shall ensure that all reinforcement be placed in accordance with the conflict free ISD drawings.

Costs to construct the work will be compensated for under separate change order.

Compensation for delays resulting from this work will be made in accordance with Section 8-1.09 "Right of Way Delays" of the Standard Specifications.

Consideration of a time adjustment will be deferred until completion of work specified herein. Determination of a commensurate time extension will be made in accordance with Section 8-1.07 Liquidated Damages of the Standard Specifications.

Estimated cost of Extra Work at Force Account $500,000.00

RECEIVED
2007 MAY 14 A 10:56

Estimated Cost: Increase ☑ Decrease ☐ **$500,000.00**

By reason of this order the time of completion will be adjusted as follows: Deferred

Submitted by

Signature	Resident Engineer	Date
M U Anigol	MAHANTESH ANIGOL	3/22/07

Approval Recommended by

Signature	Area Construction Manager	Date
	JASON TOM	3/30/07

Engineer Approval by

Signature	Area Construction Manager	Date
	~~JASON TOM~~ PETER SIEGENTHALER	4/17/07

We the undersigned contractor, have given careful consideration to the change proposed and agree, if this proposal is approved, that we will provide all equipment, furnish the materials, except as may otherwise be noted above, and perform all services necessary for the work above specified, and will accept as full payment therefor the prices shown above.

NOTE: If you, the contractor, do not sign acceptance of this order, your attention is directed to the requirements of the specifications as to proceeding with the ordered work and filing a written protest within the time therein specified.

Contractor Acceptance by

Signature	(Print name and title)	Date
	DANIEL E. HIMICK, PRESIDENT	4/10/07

49.70.01

STATE OF CALIFORNIA - DEPARTMENT OF TRANSPORTATION

CONTRACT CHANGE ORDER MEMORANDUM

TO: PETER SIEGENTHALER / JASON TOM	FILE: **E.A.** 04 - 0120R4
FROM: MAHANTESH ANIGOL	**CO-RTE-PM** SF-80-12.6/13.2
	FED. NO. ACBRIM-080-1(097)N
CCO#: **70** SUPPLEMENT#: **0** Category Code: **BZZZ**	CONTINGENCY BALANCE (incl. this change) **$24,090,943.67**
COST: **$500,000.00** INCREASE ☑ DECREASE ☐	HEADQUARTERS APPROVAL REQUIRED? ☑ YES ☐ NO
SUPPLEMENTAL FUNDS PROVIDED: **$0.00**	IS THIS REQUEST IN ACCORDANCE WITH ENVIRONMENTAL DOCUMENTS? ☑ YES ☐ NO
CCO DESCRIPTION: YBITS Advance Work	**PROJECT DESCRIPTION:** CONSTRUCT ROUTE 80 TEMP BYPASS STRUCTURE

Original Contract Time:	Time Adj. This Change:	Previously Approved CCO Time Adjustments:	Percentage Time Adjusted: (including this change)	Total # of Unreconciled Deferred Time CCO(s): (including this change)
475 Day(s)	**DEF** Day(s)	**381** Day(s)	**80** %	**7**

THIS CHANGE ORDER PROVIDES FOR:

the Contractor to produce integrated shop drawings (ISD) for the column to footing and column to bent cap interfaces for the YBI Transition Structures, Bridge Nos. 34-0006 L/R, at Bent W3R, Bent W4, Bent W5, Bent W6 and Bent W7 and for the YBI EB On-Ramp Structure, Bridge No. 34-0006 R Bent W7.

It has been identified that the footings, columns and bent caps for the YBI Transition Structures (YBITS) are highly congested sections with bar reinforcing steel, prestress ducting, utility conduits, and other embeds. To mitigate potential conflicts and future delays during the construction of the YBITS and in order to provide the Engineer with documentation of said mitigation for review and approval, prior to actual construction, it is necessary to require the Contractor to submit ISD's for each bent for the advanced work of the YBITS.

Compensation for producing ISD's will be reimbursed as Extra Work at Force Account in accordance with Section 4-1.03D, "Extra Work," and Section 9-1.03, "Force Account Payment," of the Standard Specifications and Section 5-1.24 "Force Account Payment" of the Special Provisions. The estimated cost of $500,000 is based on a force account projection provided by the Contractor's ISD subcontractor. Payment for the completion of the ISD's can be financed from the projects contingency fund.

This change was requested by Brian Maroney - Deputy Toll Bridge Program Manager and is in concurrence with Ken Terpstra - Project Manager, Peter Siegenthaler - SFOBB Construction Manager Principal Bridge Engineer, Jason Tom - Area Construction Manager Supervising Bridge Engineer, Robert Kobal - HQ Asst. Construction Coordinator, and Tom Ostrom - Office of Structure Design. Ken Darby, HQ CCO Desk Review, provided the Issue & Approve telecopy on 4/4/07.

A cost analysis, as well as other supporting documents and information relative to this change order, are on file with the project records.

Compensation for delays resulting from this work will be made in accordance with Section 8-1.09 "Right of Way Delays" of the Standard Specifications.

Any time adjustments relating to this work will be deferred as it may impact the controlling operation.

Approval of this change order is recommended by the Resident Engineer.

ADA Notice: For individuals with sensory disabilities, this document is available in alternate formats. For information call: (916) 654-6410 or TDD (916) 654-3880 or write Records and Forms Management, 1120 N Street, MS-89, Sacramento, CA 95814.

CONCURRED BY:		
Construction Engineer:	Mahantesh Anigol	Date 3/21/07
Bridge Engineer:		Date
Project Engineer:		Date
Project Manager:	Ken Terpstra	Date 11/21/06
FHWA Rep.:		Date
Environmental:		Date
Other (specify):	Brian Maroney, Dpty. TB Manager	Date 11/21/06
Other (specify):	Rob Kobal, HQ Asst. Const. Coord.	Date 3/14/07
District Prior Approval By:		Date
HQ (Issue Approve) By:	Ken Darby, HQ Ccs	Date 4/4/07
Resident Engineer's Signature:		Date
M.U. Anigol		3/21/07

ESTIMATE OF COST

	THIS REQUEST	TOTAL TO DATE
ITEMS	$0.00	$0.00
FORCE ACCOUNT	$500,000.00	$500,000.00
AGREED PRICE	$0.00	$0.00
ADJUSTMENT	$0.00	$0.00
TOTAL	$500,000.00	$500,000.00

FEDERAL PARTICIPATION

☐ PARTICIPATING ☐ PARTICIPATING IN PART ☑ NONE
☐ NON-PARTICIPATING (MAINTENANCE) ☐ NON-PARTICIPATING

FEDERAL SEGREGATION (if more than one Funding Source or P.I.P. type)
☑ CCO FUNDED PER CONTRACT ☐ CCO FUNDED AS FOLLOWS

FEDERAL FUNDING SOURCE	PERCENT

ADA Notice: For individuals with sensory disabilities, this document is available in alternate formats. For information call: (916) 654-6410 or TDD (916) 654-3880 or write Records and Forms Management, 1120 N Street, MS-89, Sacramento, CA 95814.

STATE OF CALIFORNIA - DEPARTMENT OF TRANSPORTATION

CONTRACT CHANGE ORDER

Change Requested by: Engineer

CCO 70	Suppl. No. 1	Contract No. 04 - 0120R4	Road SF-80-12.6/13.2	FED. AID LOC.: ACBRIM-080-1(097)N

To: CC MYERS INC

You are directed to make the following changes from the plans and specifications or do the following described work not included in the plans and specifications for this contract. ***NOTE: This change order is not effective until approved by the Engineer.***

Description of work to be done, estimate of quantities and prices to be paid. (Segregate between additional work at contract price, agreed price and force account.) Unless otherwise stated, rates for rental of equipment cover only such time as equipment is actually used and no allowance will be made for idle time. This last percentage shown is the net accumulated increase or decrease from the original quantity in the Engineer's Estimate.

Extra Work at Force Account:

Provide additional funds.

Estimated Cost of Extra Work at Force Account $450,000.00

Estimated Cost: **Increase** ☑ **Decrease** ☐ **$450,000.00**

By reason of this order the time of completion will be adjusted as follows: Deferred

Submitted by

Signature	Resident Engineer BILL CASEY	Date 1-16-08

Approval Recommended by

Signature	Area Construction Manager DENNIS TURCHON	Date 1/16/08

Engineer Approval by

Signature	Area Construction Manager DENNIS TURCHON	Date 1/17/08

We the undersigned contractor, have given careful consideration to the change proposed and agree, if this proposal is approved, that we will provide all equipment, furnish the materials, except as may otherwise be noted above, and perform all services necessary for the work above specified, and will accept as full payment therefor the prices shown above.

NOTE: If you, the contractor, do not sign acceptance of this order, your attention is directed to the requirements of the specifications as to proceeding with the ordered work and filing a written protest within the time therein specified.

Contractor Acceptance by

Signature NOT APPLICABLE	(Print name and title)	Date

STATE OF CALIFORNIA - DEPARTMENT OF TRANSPORTATION

CONTRACT CHANGE ORDER MEMORANDUM

RECEIVED
DATE: 12/20/2007 Page 1 of 2

TO: MIKE FORNER / DENNIS TURCHON

FROM: BILL CASEY

FILE: E.A. 04 - 0120R4 007004 FEB -4 08
CO-RTE-PM SF-80-12.6/13.2
FED. NO. ACBRIM-080-1(097)N

CCO#:	SUPPLEMENT#:	Category Code:
70	1	BZZZ

CONTINGENCY BALANCE (incl. this change) **$120,302,774.41**

COST: **$450,000.00** INCREASE ☑ DECREASE ☐

HEADQUARTERS APPROVAL REQUIRED? ☑ YES ☐ NO

SUPPLEMENTAL FUNDS PROVIDED: **$0.00**

IS THIS REQUEST IN ACCORDANCE WITH ENVIRONMENTAL DOCUMENTS? ☑ YES ☐ NO

CCO DESCRIPTION:
YBITS Advance - ISD Additional Funds

PROJECT DESCRIPTION:
CONSTRUCT ROUTE 80 TEMP BYPASS STRUCTURE

Original Contract Time:	Time Adj. This Change:	Previously Approved CCO Time Adjustments:	Percentage Time Adjusted: (including this change)	Total # of Unreconciled Deferred Time CCO(s): (including this change)
475 Day(s)	DEF Day(s)	1195 Day(s)	252 %	8

THIS CHANGE ORDER PROVIDES FOR:

additional funds for the Contractor to produce integrated shop drawings (ISD) for the column to footing and column to bent cap interfaces for the YBI Transition Structures, Bridge Nos. 34-0006 L/R, at Bent W3R, Bent W4, Bent W5, Bent W6 and Bent W7 and for the YBI EB On-Ramp Structure, Bridge No. 34-0006 R Bent W7.

It has been identified that the footings, columns and bent caps for the Yerba Buena Island Transition Structures (YBITS) are highly congested sections with bar reinforcing steel, prestress ducting, utility conduits, and other embeds. To mitigate potential conflicts and future delays during the construction of the YBITS and in order to provide the Engineer with documentation of said mitigation for review and approval, prior to actual construction, it is necessary to require the Contractor to submit ISDs for each bent for the advanced work of the YBITS.

There are three reasons why production of the YBI Advanced ISDs has cost more than expected: unique elements, two-end integration, and scope of superstructure work.

Unique Elements: By engineering necessity, the designs of the various footings, columns and bent caps tend to be unique and specific to each bent, rather tha being one design repeated at each bent. Foundation designs vary among CIDH piles, driven piles, and spread footings with tiedown anchors. Bent columns vary in number from one to four, with or without walls between columns. If all of the bents were of one typical design, the resolutions learned at one location would be efficiently applied at all other locations, reducing time and effort. Since each bent is unique, with unique issues to solve, each ISD is a customized effort.

Two-End Integration: Integrating column vertical bars with horizontal bars in both the footings and bent caps has been more difficult that anticipated. Adjusting the position of a column vertical bar to resolve an issue with a footing bar may cause a new issue with a bent cap, and vice versa. Adjusting the position of column vertical bars to accommodate both footing bars and bent cap bars is a meticulous and iterative process requiring more time and effort than only having to accommodate bars at one end.

Scope of Superstructure Work: The detailing effort to reconcile physical issues between bent cap horizontal bars and column vertical bars has taken more effort than intially anticipated. Bar reinforcing steel for the bent caps will be installed as future work, not installed under the current contract. The ISDs are intended to insure that placement of the column vertical bars accommodate the positions of bent cap bars to be placed during the future project. The effort expended to resolve these physical issues also contributes to the additional expected time and effort required to complete the ISDs.

Compensation for producing ISD's will be reimbursed as Extra Work at Force Account for an estimated cost of $450,000.00, which will be financed from the project's contingency funds, bringing the total amount allocated to this change order to $950,000.00. A cost analysis, as well as other supporting documents and information relative to this change order, are on file with the project records.

The Contractor's signature is not required for additional funds for Extra Work at Force Account change orders. Therefore this change order is being issued unilaterally.

ADA Notice: For individuals with sensory disabilities, this document is available in alternate formats. For information call: (916) 654-6410 or TDD (916) 654-3880 or write Records and Forms Management, 1120 N Street, MS-89, Sacramento, CA 95814.

Compensation for delays resulting from this work will be made in accordance with Section 8-1.09 "Right of Way Delays" of the Standard Specifications.

Any time adjustments relating to this work will be deferred as it may impact the controlling operation.

This change was cocurred by Alec Melkonians - Asst. Project Manager.

Approval of this change order is recommended by the Resident Engineer.

CONCURRED BY:		
Construction Engineer:		Date
Bridge Engineer:		Date
Project Engineer:	Hong Wong, PE	Date
Project Manager:	Alec Melkonians	Date 1/11/08
FHWA Rep.:		Date
Environmental:		Date
Other (specify):		Date
Other (specify):		Date
District Prior Approval By:		Date
HQ (Issue Approve) By:	Ken Darby, HQ CCO Engineer	Date
Resident Engineer's Signature:		Date

1-16-08

ESTIMATE OF COST

	THIS REQUEST	TOTAL TO DATE
ITEMS	$0.00	$0.00
FORCE ACCOUNT	$450,000.00	$950,000.00
AGREED PRICE	$0.00	$0.00
ADJUSTMENT	$0.00	$0.00
TOTAL	$450,000.00	$950,000.00

FEDERAL PARTICIPATION

☐ PARTICIPATING ☐ PARTICIPATING IN PART ☐ NONE
☐ NON-PARTICIPATING (MAINTENANCE) ☑ NON-PARTICIPATING

FEDERAL SEGREGATION (if more than one Funding Source or P.I.P. type)
☑ CCO FUNDED PER CONTRACT ☐ CCO FUNDED AS FOLLOWS

FEDERAL FUNDING SOURCE	PERCENT

ADA Notice: For individuals with sensory disabilities, this document is available in alternate formats. For information call: (916) 654-6410 or TDD (916) 654-3880 or write Records and Forms Management, 1120 N Street, MS-89, Sacramento, CA 95814.

CONTRACT CHANGE ORDER

Change Requested by: Engineer

CCO 71	Suppl. No. 0	Contract No. 04 - 0120R4	Road SF-80-12.6/13.2	FED. AID LOC.: ACBRIM-080-1(097)N

To: **CC MYERS INC**

You are directed to make the following changes from the plans and specifications or do the following described work not included in the plans and specifications for this contract. ***NOTE: This change order is not effective until approved by the Engineer.***

Description of work to be done, estimate of quantities and prices to be paid. (Segregate between additional work at contract price, agreed price and force account.) Unless otherwise stated, rates for rental of equipment cover only such time as equipment is actually used and no allowance will be made for idle time. This last percentage shown is the net accumulated increase or decrease from the original quantity in the Engineer's Estimate.

Extra Work at Lump Sum:

Demolish a portion of the existing facility and construct one 1.8m diameter CIDH pile.

The work includes the following:

1) Remove and dispose of the portion of bridge deck and fixed columns for the existing facility, as shown on the attached plan sheets 4R1 of 33, 5R2 of 33, 6R2 of 33, and 8R2 of 33.

2) Construct one 1.8m diameter CIDH pile, as shown on the attached plan sheet "West Tie In Phase 2, South-South Detour, CIDH Pile 46L".

For this work, the Contractor will be paid the agreed lump sum price of $384,130.00. This lump sum constitutes fulll compensation, including markups, for the work of this change.

Total Cost of Extra Work at Lump Sum $384,130.00

Estimated Cost: **Increase** ☑ **Decrease** ☐ **$384,130.00**

By reason of this order the time of completion will be adjusted as follows: 0 days

Submitted by

Signature	Resident Engineer	Date
M. U. Anigol	MAHANTESH ANIGOL	7/20/07

Approval Recommended by

Signature	Area Construction Manager	Date
	DENNIS TURCHON	7/20/07

Engineer Approval by

Signature	Area Construction Manager	Date
	DENNIS TURCHON	7/27/07

We the undersigned contractor, have given careful consideration to the change proposed and agree, if this proposal is approved, that we will provide all equipment, furnish the materials, except as may otherwise be noted above, and perform all services necessary for the work above specified, and will accept as full payment therefor the prices shown above.

NOTE: If you, the contractor, do not sign acceptance of this order, your attention is directed to the requirements of the specifications as to proceeding with the ordered work and filing a written protest within the time therein specified.

Contractor Acceptance by

Signature	(Print name and title)	Date
	Daniel E. Himick, President	7/26/07

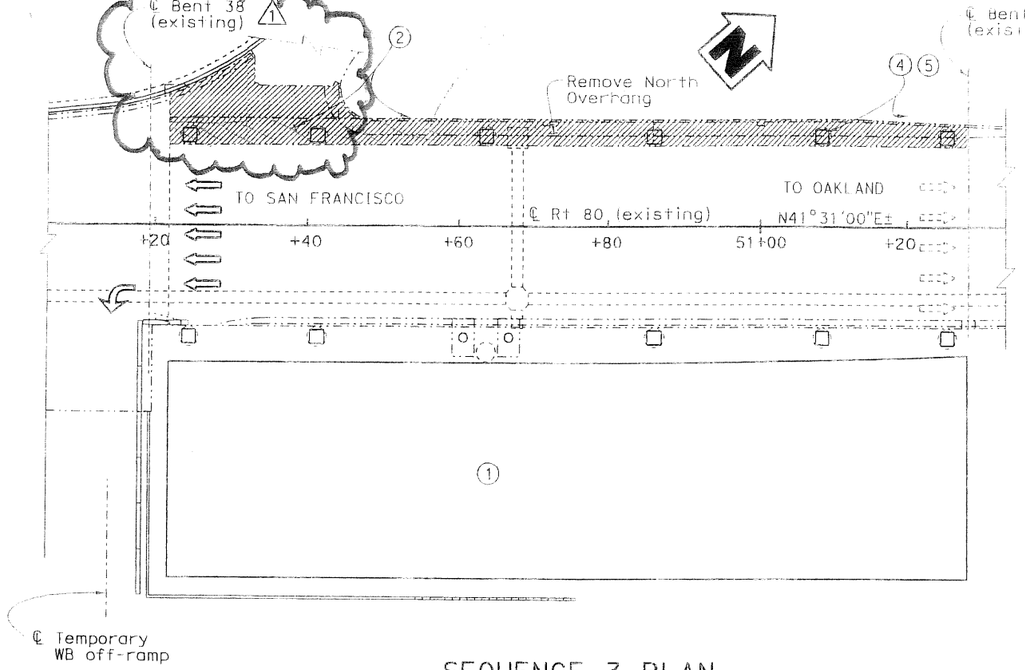

SEQUENCE 3 PLAN

1:400

CONSTRUCTION SEQUENCE 3

1. Construct CIP Box and post tension
2. Partial bridge demolition north side including north overhang, walls and curb See Stage 1 Demolition Plans
3. Grade north staging area
4. Construct 6 north CIDH piles
5. Construct 6 north columns
6. Fill existing Utility Tunnel with Concrete

TRAFFIC (See Road Plans)

Place K rail north side of lower level, shift 5 EB lanes to the south

Place K-rail along north side upper level (K-rail to be pinned to viaduct)

EB on ramp remains open

04	SF	80	12.6/13.2	

M J Cullen 4/17/07
REGISTERED CIVIL ENGINEER DATE

PLANS APPROVAL DATE

REGISTERED PROFESSIONAL ENGINEER — M. J. CULLEN No. C 40620 Exp. 03-31-09 CIVIL — STATE OF CALIFORNIA

The State of California or its officers or agents shall not be responsible for the accuracy or completeness of electronic copies of this plan sheet.

Caltrans now has a web site! To get to the web site, go to: http://www.dot.ca.gov

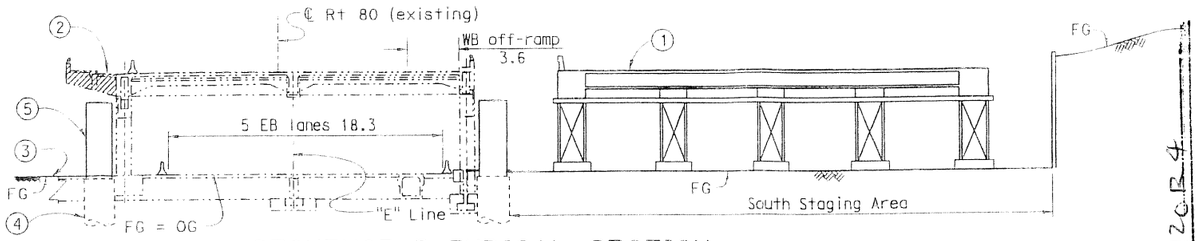

SEQUENCE 3 TYPICAL SECTION

1:200

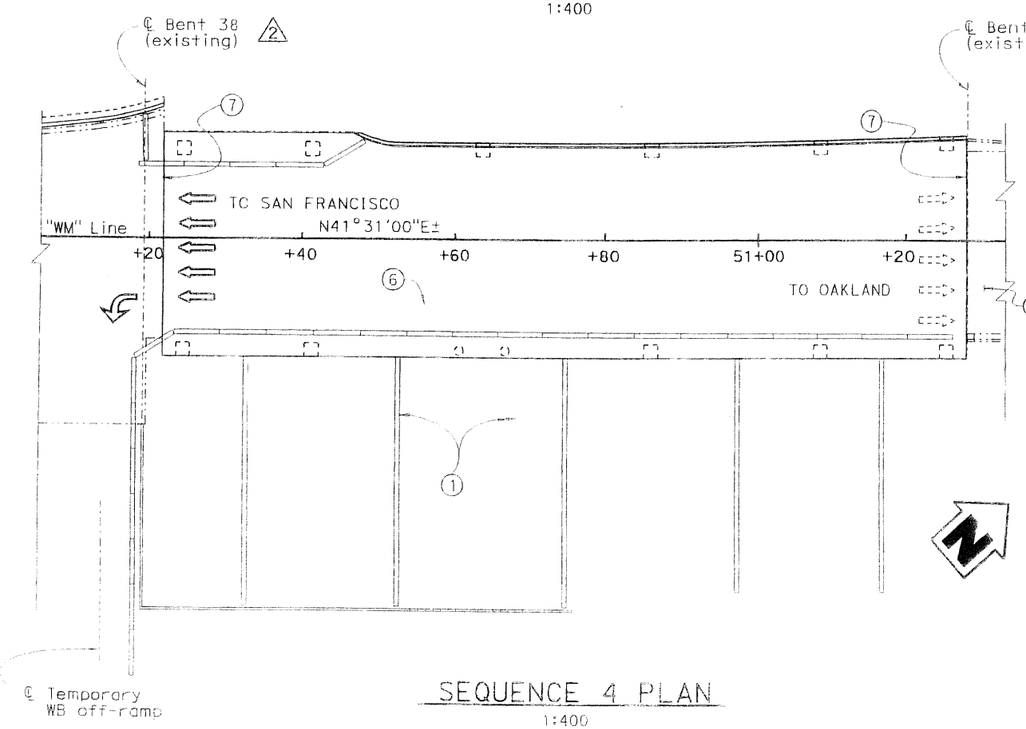

SEQUENCE 4 PLAN

1:400

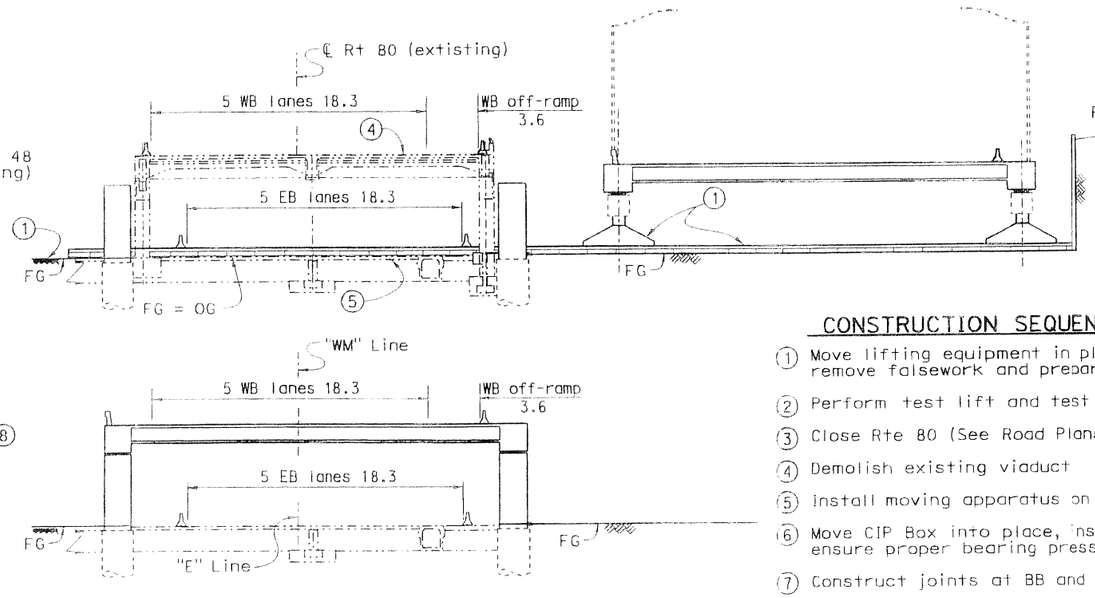

SEQUENCE 4 TYPICAL SECTION

1:200

CONSTRUCTION SEQUENCE 4

1. Move lifting equipment in place and engage structure, remove falsework and prepare site for bridge move
2. Perform test lift and test move
3. Close Rte 80 (See Road Plans)
4. Demolish existing viaduct
5. Install moving apparatus on lower deck of Rte 80
6. Move CIP Box into place, install column pins, ensure proper bearing pressure at all columns
7. Construct joints at BB and EB
8. Regrade existing viaduct B48-B49 (see Road Plans)
9. Connect deck lighting
10. Open Rte 80 (See Road Plans)

TRAFFIC (See Road Plans)

Close Rte 80

REGISTERED PROFESSIONAL ENGINEER — M. J. CULLEN No. C 40620 Exp. 03-31-07 CIVIL — STATE OF CALIFORNIA

MARK	DATE	REVISION(S) DESCRIPTIONS	DES	CHK	DET
3					
2	4-16-07	Revised Demo Limits	MC	GS	AC
1	4-16-07	Revised Demo Limits	MC	GS	AC

REGISTERED CIVIL ENGINEER: M J Cullen DATE: 4-17-07

CONTRACT CHANGE ORDER NO. 71
SHEET 2 OF 16

CONTRACT NO. 04-0120R4

CONTRACT CHANGE ORDER NO 71

SHEET 2 OF 16

Caltrans Metric	REVISED 4-16-07	DESIGN	G. Schuster	M. J. Cullen	STATE OF CALIFORNIA DEPARTMENT OF TRANSPORTATION	DIVISION OF ENGINEERING SERVICES STRUCTURE DESIGN DESIGN BRANCH 5	BRIDGE NO. 34-0006
		DETAILS	G. S/T. C/A. C	M. J. Cullen			KILOMETER POST NA
		QUANTITIES	M. Guadamuz	G. Schuster			

WEST TIE-IN PHASE 1
YBI VIADUCT REPLACEMENT
CONSTRUCTION SEQUENCE DETAILS NO. 2

ALL DIMENSIONS ARE IN MILLIMETERS UNLESS OTHERWISE SHOWN

ORIGINAL SCALE IN MILLIMETERS FOR REDUCED PLANS 0 10 20 30 40 50 60 70 80 90 100

CU 04251
EA 0120R1

DISREGARD PRINTS BEARING EARLIER REVISION DATES

REVISION DATES: 4-16-07

SHEET 4R1 OF 33

FILE => 34-0006-c-constseq02-r1.dgn

STRUCTURES DESIGN DETAIL SHEET (METRIC) (REV.03-17-04)

USERNAME => gscuzo TIME PLOTTED = 13:38 DATE PLOTTED = 17-APR-2007

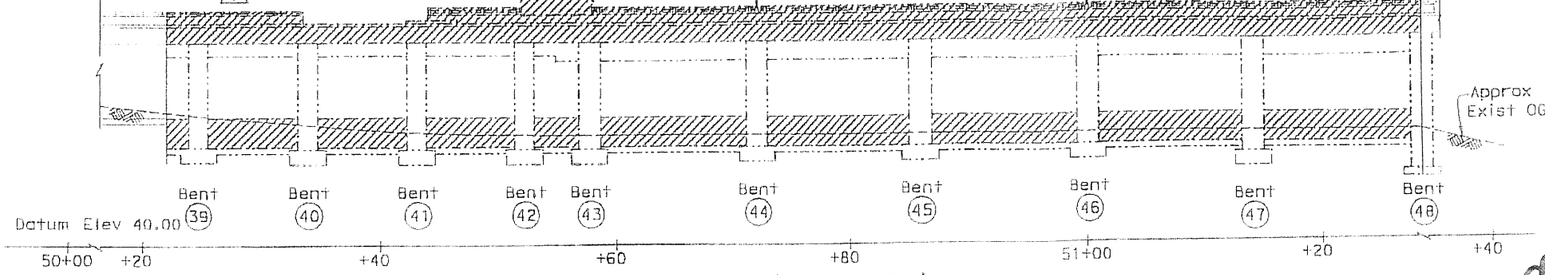

SECTION A-A (MIRRORED)

1:250

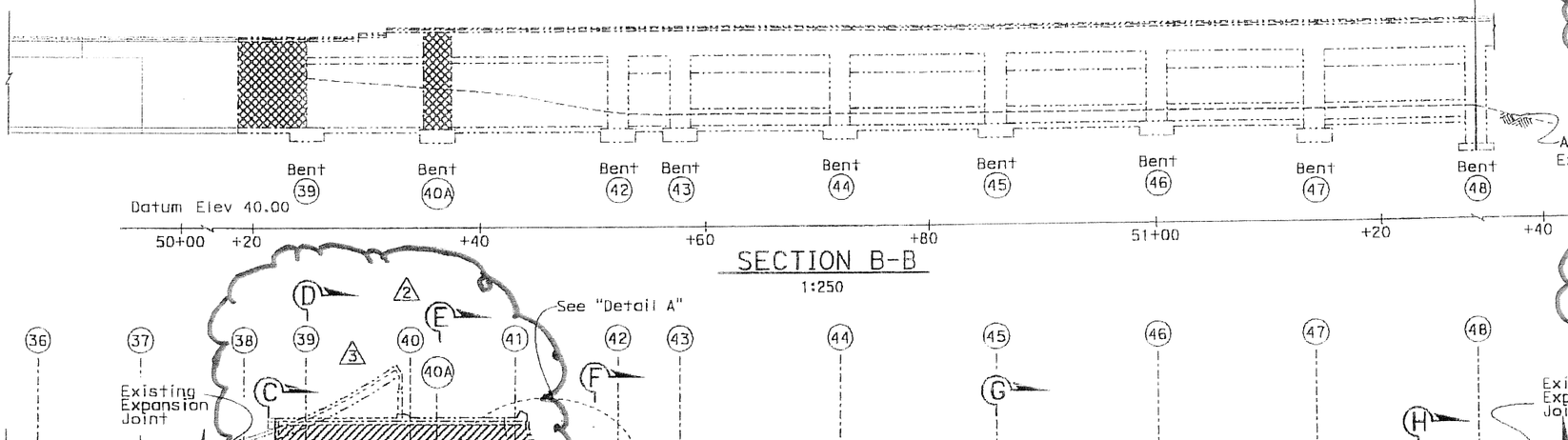

SECTION B-B

1:250

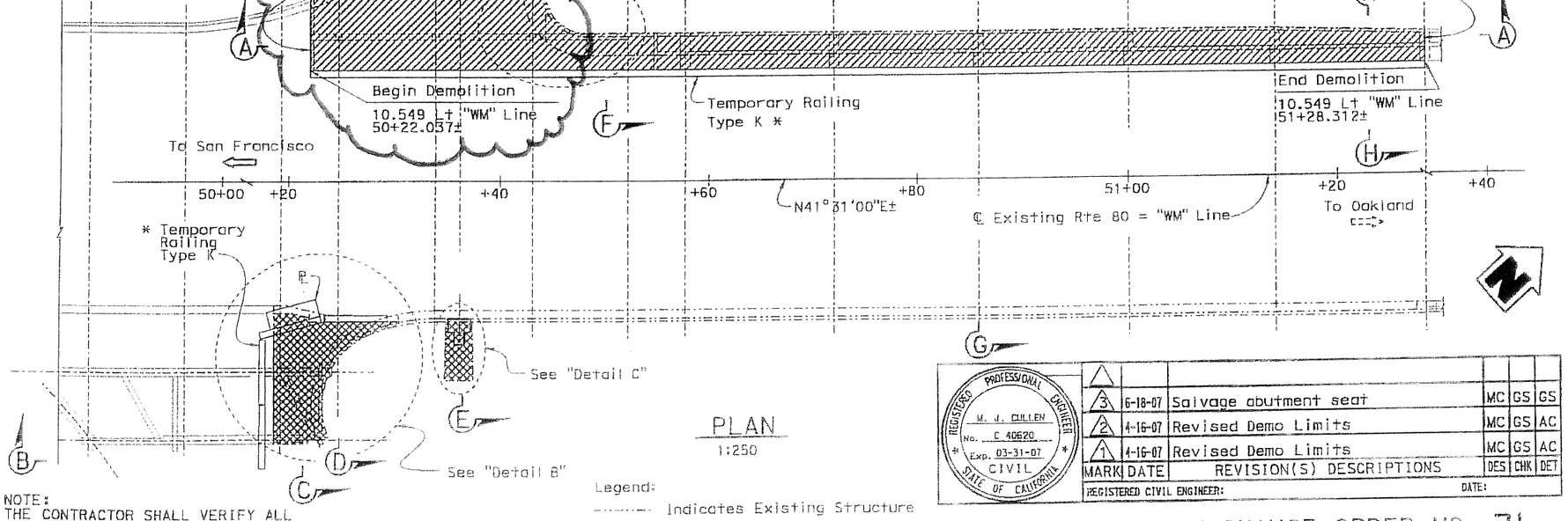

PLAN

1:250

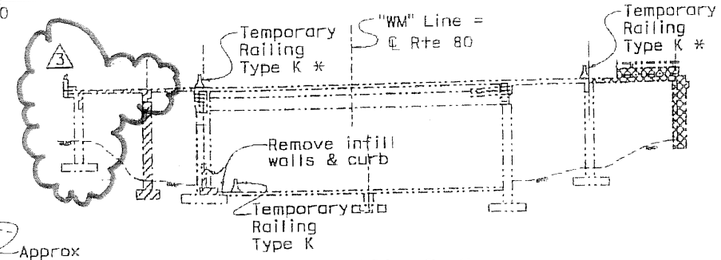

SECTION C-C

1:200

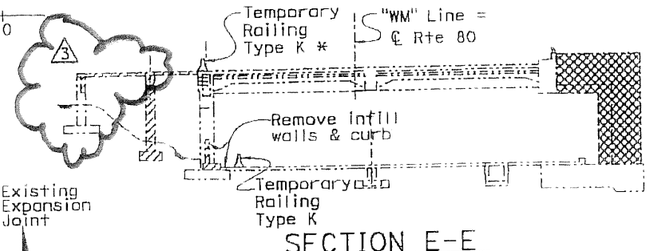

SECTION E-E

1:200

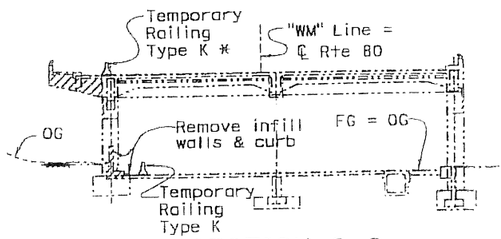

SECTION G-G

1:200

Note:

For details and sections of north side demolition, see "Stage 1 Demolition Details No. 1" sheet

For details and sections of south side demolition, see "Stage 1 Demolition Details No. 2" sheet

For "Detail A", "Detail B", and "Detail C", see "Stage 1 Demolition Details No. 3" Sheet

For "General Notes", "Standard Plans", and "Index to Plan", see "Stage 1 Demolition Details No. 2" sheet

* For K rail layout see "Road Plans"

NOTE:
THE CONTRACTOR SHALL VERIFY ALL CONTROLLING FIELD DIMENSIONS BEFORE ORDERING OR FABRICATING ANY MATERIAL.

Legend:

- Indicates Existing Structure
- Bridge Removal Portion, North
- Bridge Removal Portion, South

M J Cullen 6-18-07
REGISTERED CIVIL ENGINEER DATE

PLANS APPROVAL DATE

The State of California or its officers or agents shall not be responsible for the accuracy or completeness of electronic copies of this plan sheet.

REGISTERED PROFESSIONAL ENGINEER
M. J. CULLEN
No. C 40620
Exp. 03-31-09
CIVIL
STATE OF CALIFORNIA

Caltrans now has a web site! To get to the web site, go to: http://www.dot.ca.gov

REGISTERED PROFESSIONAL ENGINEER
M. J. CULLEN
No. C 40620
Exp. 03-31-07
CIVIL
STATE OF CALIFORNIA

MARK	DATE	REVISION(S) DESCRIPTIONS	DES	CHK	DET
3	6-18-07	Salvage abutment seat	MC	GS	GS
2	4-16-07	Revised Demo Limits	MC	GS	AC
1	4-16-07	Revised Demo Limits	MC	GS	AC

REGISTERED CIVIL ENGINEER: DATE:

CONTRACT CHANGE ORDER NO. 71
SHEET 3 OF 6. 04-0120R4

Caltrans Metric

REVISED
6-18-07

DESIGN	BY H. Fang	CHECKED M. J. Cullen
DETAILS	BY M. Tran/A. Chen	CHECKED M. J. Cullen
QUANTITIES	BY J. Holman	CHECKED H. Fang

ALL DIMENSIONS ARE IN MILLIMETERS UNLESS OTHERWISE SHOWN

ORIGINAL SCALE IN MILLIMETERS FOR REDUCED PLANS 0 10 20 30 40 50 60 70 80 90 100

STATE OF CALIFORNIA
DEPARTMENT OF TRANSPORTATION

DIVISION OF ENGINEERING SERVICES
STRUCTURE DESIGN
DESIGN BRANCH 5

CU 04251
EA 0120R1

[FILE => 34-0006-e-demo_gp-stage1-r2.dgn]

BRIDGE NO.	34-0006
KILOMETER POST	NA

DISREGARD PRINTS BEARING EARLIER REVISION DATES

REVISION DATES: 6-18-07

SHEET	OF
5R2	33

STRUCTURES DESIGN DETAIL SHEET (METRIC) (REV.03-17-04)

WEST TIE-IN PHASE 1
YBI VIADUCT REPLACEMENT
STAGE 1 DEMOLITION GENERAL PLAN

[USERNAME => GBOUZO] [DATE PLOTTED => 15-JUN-2007] [TIME PLOTTED => 16:52]

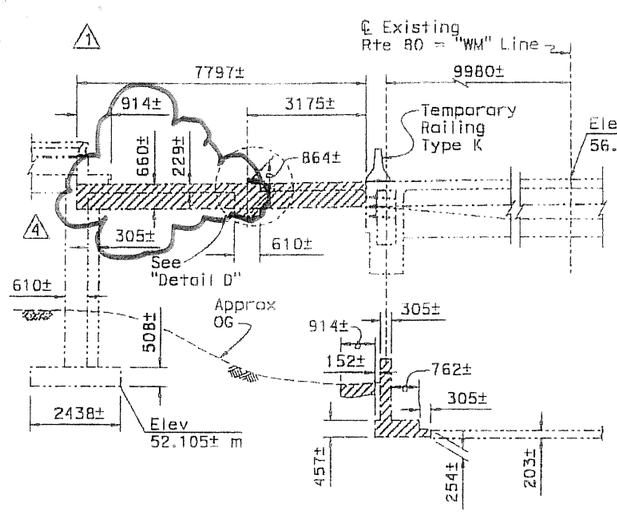

PART SECTION C-C (NORTH SIDE)

1:80

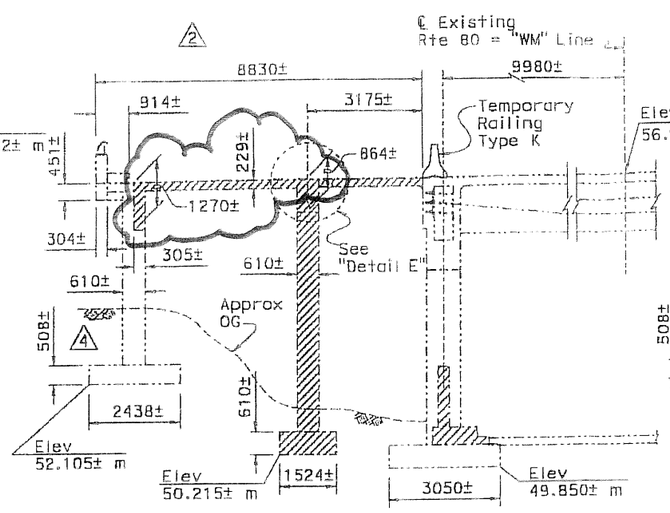

PART SECTION D-D (NORTH SIDE)

1:80

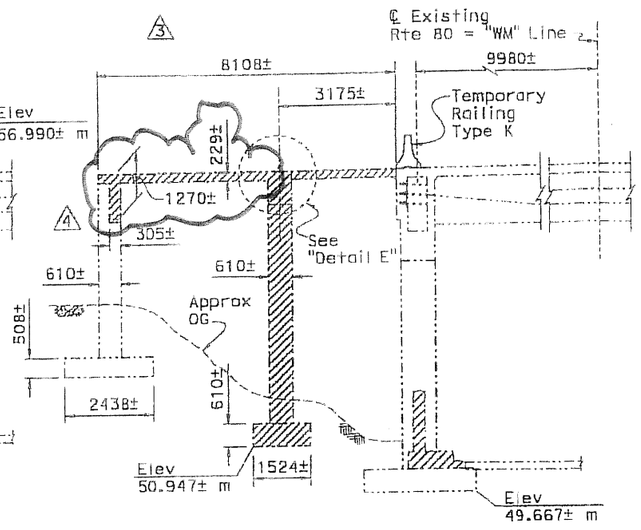

PART SECTON E-E (NORTH SIDE)

1:80

Legend:

Indicates Existing Structure

Bridge Removal Portion, North

Note:

For Locations of Sections, see "Stage 1 Demolition General Plan" sheet

For "Detail D" and "Detail E" see "Stage 1 Demolition Details No. 3" sheet

For Section J-J, see "Stage 1 Demolition Details No. 2" sheet

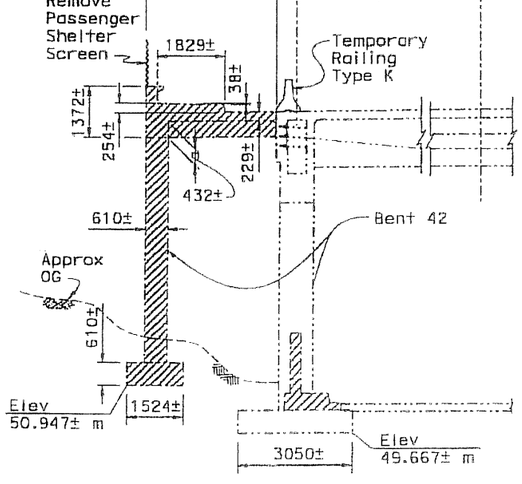

SECTION F-F

1:80

Note: Bent 42 shown, Bent 43 is similar

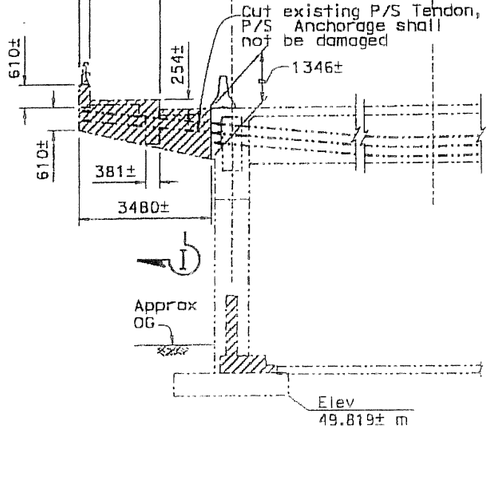

PART SECTION G-G (NORTH SIDE)

1:80

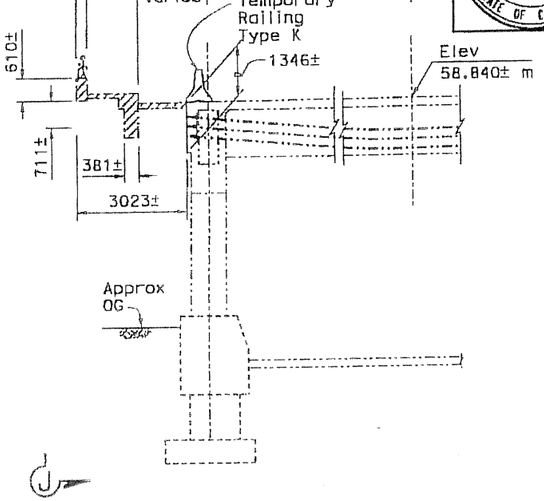

SECTION H-H

1:80

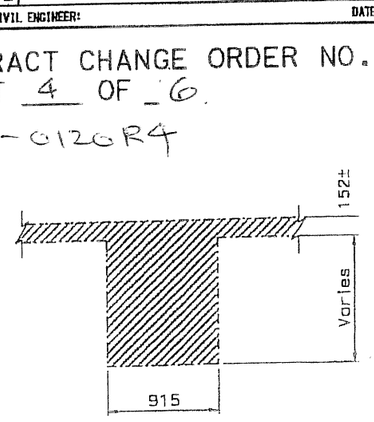

SECTION I-I

1:25

NOTE:
THE CONTRACTOR SHALL VERIFY ALL CONTROLLING FIELD DIMENSIONS BEFORE ORDERING OR FABRICATING ANY MATERIAL.

M. J. Cullen 6-18-07
REGISTERED CIVIL ENGINEER DATE

PLANS APPROVAL DATE

REGISTERED PROFESSIONAL ENGINEER M. J. CULLEN No. C 40620 Exp. 03-31-09 CIVIL STATE OF CALIFORNIA

The State of California or its officers or agents shall not be responsible for the accuracy or completeness of electronic copies of this plan sheet.

Caltrans now has a web site! To get to the web site, go to: http://www.dot.ca.gov

REGISTERED PROFESSIONAL ENGINEER M. J. CULLEN No. C 40620 Exp. 03-31-07 CIVIL STATE OF CALIFORNIA

MARK	DATE	REVISION(S) DESCRIPTIONS	DES	CHK	DET
4	6-18-07	Salvage Abutment Seat	MC	GS	GS
3	4-16-07	Revised Demo Limits	MC	GS	AC
2	4-16-07	Revised Demo Limits	MC	GS	AC
1	4-16-07	Revised Demo Limits	MC	GS	AC

REGISTERED CIVIL ENGINEER: DATE:

CONTRACT CHANGE ORDER NO. 71
SHEET 4 OF 6
64-0120R4

REVISED 6-18-07

DESIGN	BY H. Fong	CHECKED M. J. Cullen	
DETAILS	BY M. Tron/A. Chen	CHECKED M. J. Cullen	
QUANTITIES	BY J. Holman	CHECKED H. Fong	

ALL DIMENSIONS ARE IN MILLIMETERS UNLESS OTHERWISE SHOWN

ORIGINAL SCALE IN MILLIMETERS FOR REDUCED PLANS 0 10 20 30 40 50 60 70 80 90 100

STATE OF CALIFORNIA DEPARTMENT OF TRANSPORTATION

DIVISION OF ENGINEERING SERVICES STRUCTURE DESIGN
DESIGN BRANCH 5

CU 04251
EA 0120R1

BRIDGE NO. 34-0006
KILOMETER POST NA

WEST TIE-IN PHASE 1
YBI VIADUCT REPLACEMENT
STAGE 1 DEMOLITION DETAILS NO. 1

DISREGARD PRINTS BEARING EARLIER REVISION DATES

REVISION DATES: 4-16-07 6-18-07

SHEET 6R2 OF 33

[FILE => 34-0006-c-demodtl-stage1-r2.dgn]

STRUCTURES DESIGN DETAIL SHEET (METRIC) (REV.03-17-04)

TIME PLOTTED => 10:52
DATE PLOTTED => 18-JUN-2007
USERNAME => dsouza

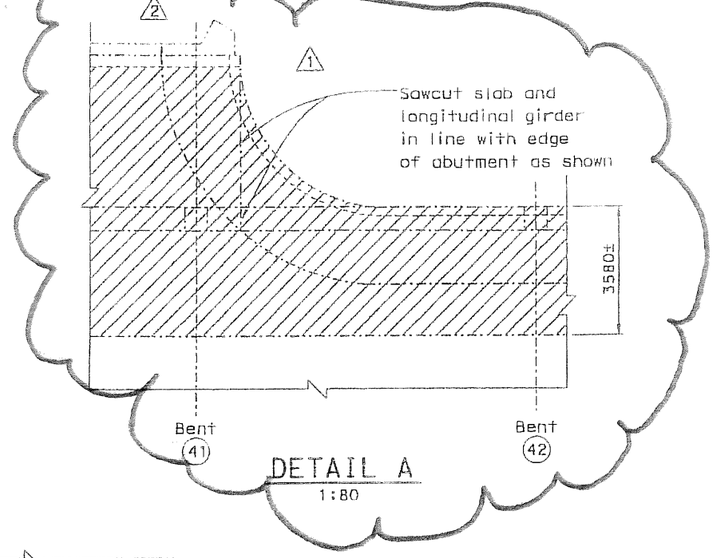

DETAIL A
1:80

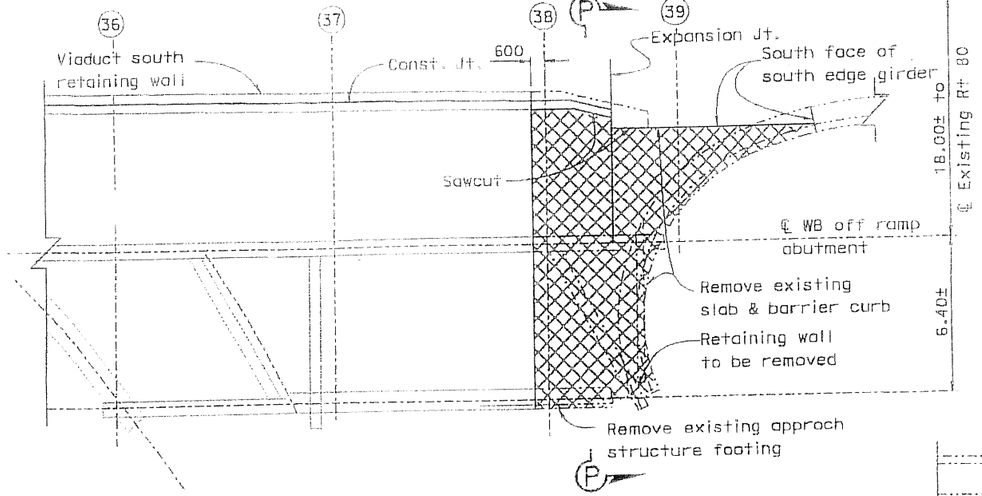

PLAN @ WB OFF RAMP APPROACH
1:125

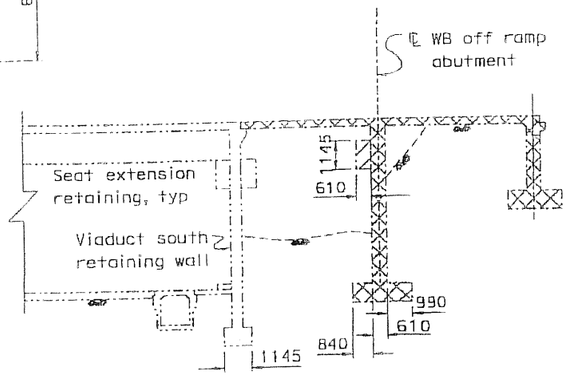

SECTION P-P
1:125

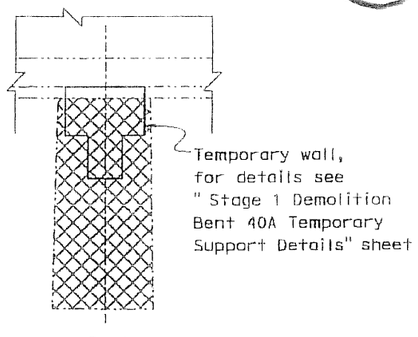

DETAIL C
1:80

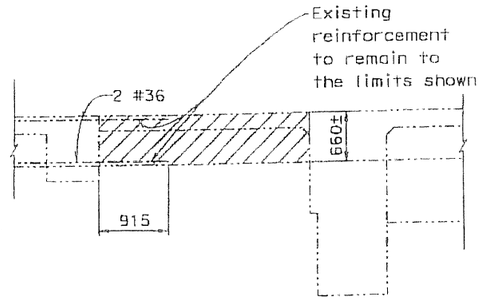

DETAIL D
1:40

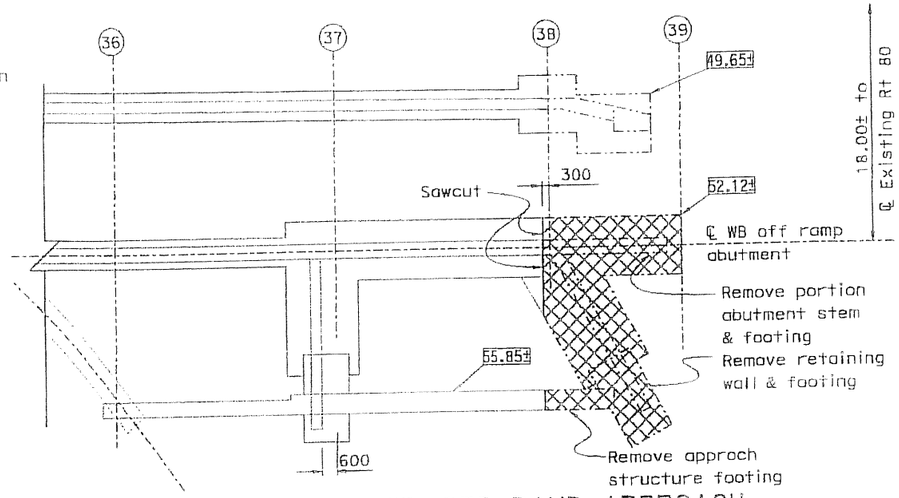

FOOTING PLAN @ WB OFF RAMP APPROACH
1:125

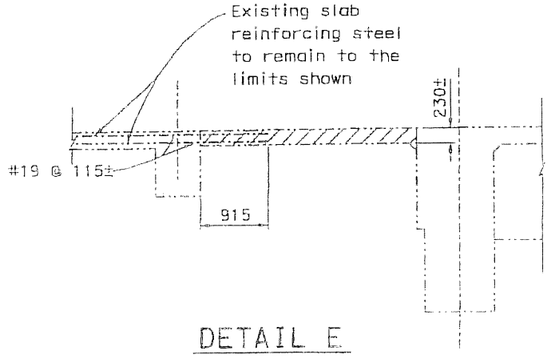

DETAIL E
1:40

DETAIL B

Notes:

For location of "Detail A", "Detail B", and "Detail C", see "Stage 1 Demolition General Plan" sheet

For location of "Detail D" and "Detail E", see "Stage 1 Demolition Details No. 1" sheet

Legend:

- Indicates Existing Structure
- Bridge Removal Portion, North
- Bridge Removal Portion, South

M. J. CULLEN
No. C 40620
Exp. 03-31-07
CIVIL
STATE OF CALIFORNIA

MARK	DATE	REVISION(S) DESCRIPTIONS	DES	CHK	DET
2	6-18-07	Salvage WB onramp Abutment	MC	GS	GS
1	4-16-07	Revised Demo Limits	MC	GS	AC

REGISTERED CIVIL ENGINEER: DATE:

M. J. CULLEN
No. C 40620
Exp. 03-31-09
CIVIL
STATE OF CALIFORNIA

M J Cullen 6-18-07
REGISTERED CIVIL ENGINEER DATE

PLANS APPROVAL DATE

The State of California or its officers or agents shall not be responsible for the accuracy or completeness of electronic copies of this plan sheet.

Caltrans now has a web site! To get to the web site, go to: http://www.dot.ca.gov

CONTRACT CHANGE ORDER NO. 71
SHEET 5 OF 6. 04-0120R4

Caltrans Metric

REVISED
6-18-07

ALL DIMENSIONS ARE IN MILLIMETERS UNLESS OTHERWISE SHOWN

	BY	CHECKED
DESIGN	H. Fong	M. J. Cullen
DETAILS	A. Chen	M. J. Cullen
QUANTITIES	J. Holman	H. Fong

ORIGINAL SCALE IN MILLIMETERS FOR REDUCED PLANS 0 10 20 30 40 50 60 70 80 90 100

STATE OF CALIFORNIA
DEPARTMENT OF TRANSPORTATION

DIVISION OF ENGINEERING SERVICES
STRUCTURE DESIGN
DESIGN BRANCH 5

CU 04251
EA 0120R1

FILE => 34-0006-e-demodt3-stage1-r2.dgn

BRIDGE NO. 34-0006
KILOMETER POST NA

DISREGARD PRINTS BEARING EARLIER REVISION DATES

REVISION DATES: 6-18-07 | 6-18-07

WEST TIE-IN PHASE 1
YBI VIADUCT REPLACEMENT
STAGE 1 DEMOLITION DETAILS NO. 3

SHEET 8R2 OF 33

STRUCTURES DESIGN DETAIL SHEET (METRIC) (REV.03-17-04)

USERNAME => dbouzo DATE PLOTTED => 18-JUN-2007 TIME PLOTTED => 11:07

DIST	COUNTY	ROUTE	TOTAL PROJECT	No	SHEETS
04	SF	80	12.6/13.2		

REGISTERED CIVIL ENGINEER DATE
M J Cullen 4-24-07
PLANS APPROVAL DATE

REGISTERED PROFESSIONAL ENGINEER — W. J. CULLEN — No. C 40620 — Exp. 03-31-07 — CIVIL — STATE OF CALIFORNIA

The State of California or its officers or agents shall not be responsible for the accuracy or completeness of electronic copies of this plan sheet.

Caltrans now has a web site! To get to the web site, go to: http://www.dot.ca.gov

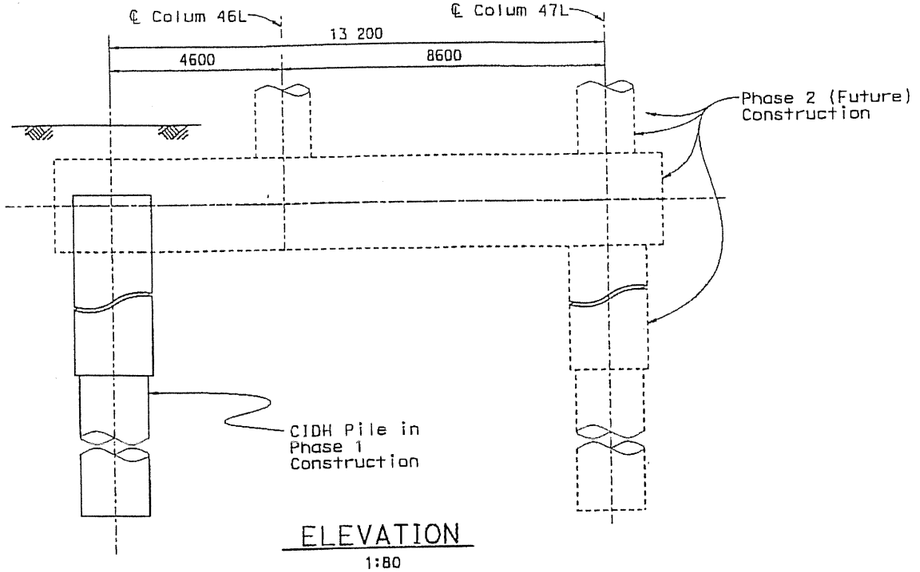

ELEVATION
1:80

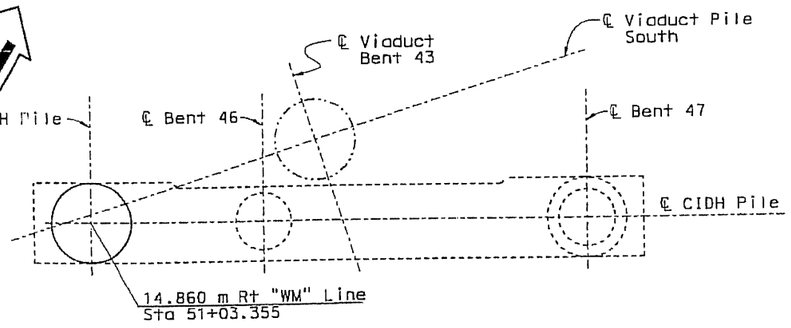

PLAN
1:80

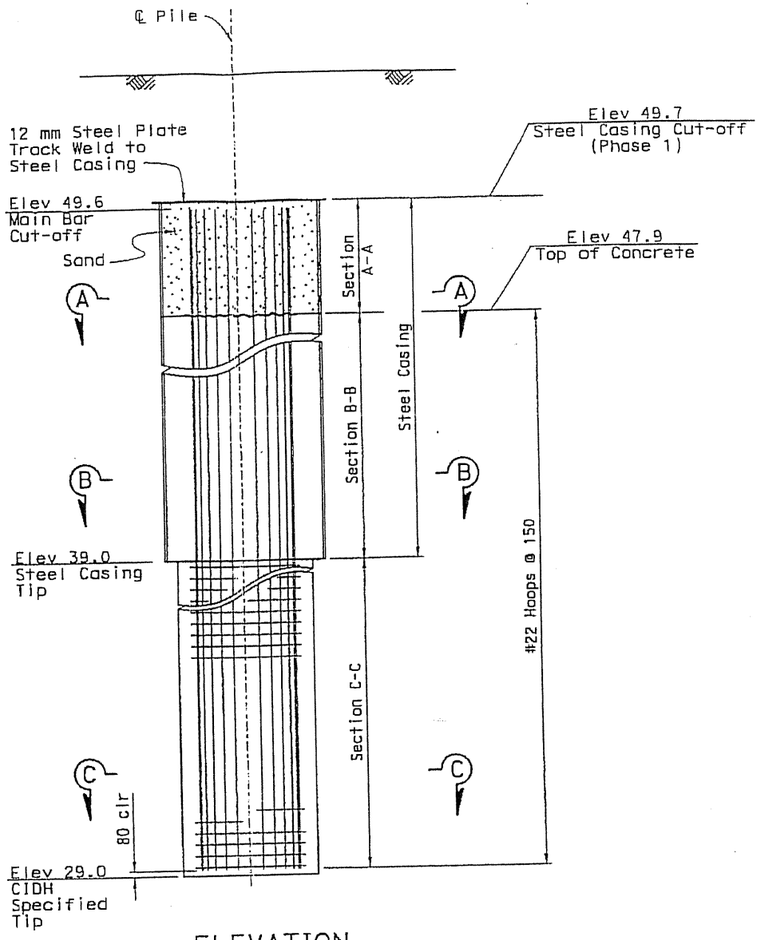

ELEVATION
1:40

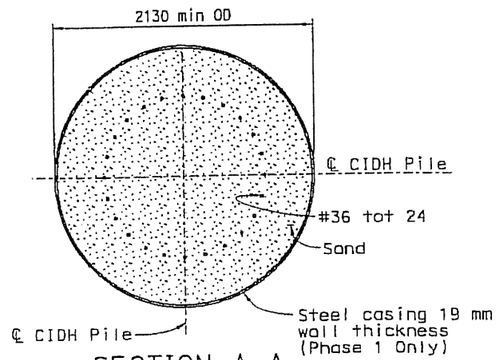

SECTION A-A
1:25

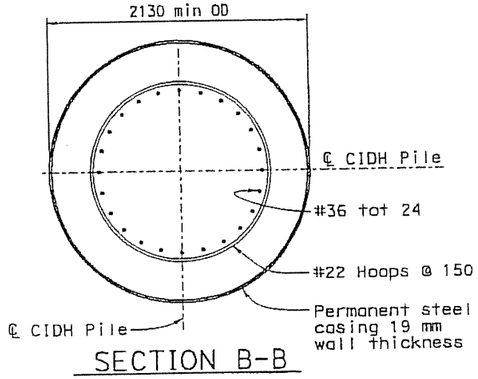

SECTION B-B
1:25

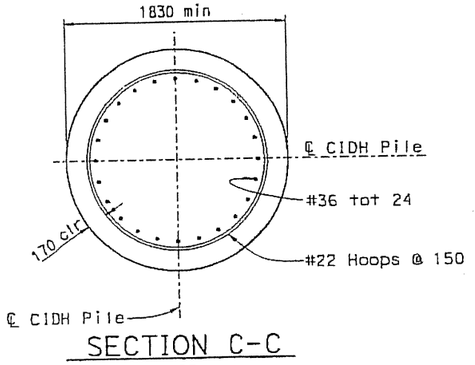

SECTION C-C
1:25

CONTRACT NO. 64-0120R4

CONTRACT CHANGE ORDER NO 71

SHEET 6 OF 6

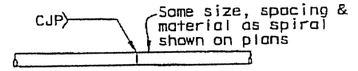

Individual hoops, made continuous with 100% penetration welds, may be substituted for spirals.

BUTT WELDED CONTINUOUS HOOP BAR AND HOOP DETAIL
no scale

DESIGN	BY C. M. Duan	CHECKED G. Schuster	
DETAILS	BY A. Chen	CHECKED W. J. Cullen	
QUANTITIES	BY C. M. Duan	CHECKED W. J. Cullen	

STATE OF CALIFORNIA
DEPARTMENT OF TRANSPORTATION

DIVISION OF ENGINEERING SERVICES
STRUCTURE DESIGN
DESIGN BRANCH 5

CU 04251
EA 0120P1

BRIDGE NO. 34-0006
KILOMETER POST NA

WEST TIE IN PHASE 2
SOUTH - SOUTH DETOUR
CIDH PILE 46L

ALL DIMENSIONS ARE IN MILLIMETERS UNLESS OTHERWISE SHOWN

ORIGINAL SCALE IN MILLIMETERS FOR REDUCED PLANS 0 10 20 30 40 50 60 70 80 90 100

DISREGARD PRINTS BEARING EARLIER REVISION DATES

REVISION DATES: 4-11-07 | 4-11-07 | 4-11-07

SHEET 00 OF

FILE => 02-34-0006-i-pile461.dgn

STRUCTURES DESIGN DETAIL SHEET (METRIC) (REV.03-17-04)

USERNAME => AChen DATE PLOTTED => 24-APR-2007 TIME PLOTTED => 14:34

STATE OF CALIFORNIA - DEPARTMENT OF TRANSPORTATION

CONTRACT CHANGE ORDER MEMORANDUM

DATE: 7/20/2007 RECEIVED Page 1 of 1

TO: MIKE FORNER / DENNIS TURCHON	FILE: E.A. 04 - 0120R4
FROM: MAHANTESH ANIGOL	CO-RTE-PM SF-80-12.6/13.2 006287 AUG-8
	FED. NO. ACBRIM-080-1(097)N
CCO#: 71 SUPPLEMENT#: 0 Category Code: CHPA	CONTINGENCY BALANCE (incl. this change) $31,459,853.20
COST: $384,130.00 INCREASE ☑ DECREASE ☐	HEADQUARTERS APPROVAL REQUIRED? ☑ YES ☐ NO
SUPPLEMENTAL FUNDS PROVIDED: $0.00	IS THIS REQUEST IN ACCORDANCE WITH ENVIRONMENTAL DOCUMENTS? ☑ YES ☐ NO
CCO DESCRIPTION: WTI Pile @ 46L / Slab Bridge Removal	**PROJECT DESCRIPTION:** CONSTRUCT ROUTE 80 TEMP BYPASS STRUCTURE

Original Contract Time:	Time Adj. This Change:	Previously Approved CCO Time Adjustments:	Percentage Time Adjusted: (including this change)	Total # of Unreconciled Deferred Time CCO(s): (including this change)
475 Day(s)	0 Day(s)	381 Day(s)	80 %	7

THIS CHANGE ORDER PROVIDES FOR:

Demolish a portion of the existing facility and construct one 1.8m diameter CIDH pile.

This contract was awarded on March 10, 2004 to construct a temporary detour for both eastbound and westbound I-80 traffic that allows for the tie-in of the east span of the new San Francisco-Oakland Bay Bridge (SFOBB) to Yerba Buena Island. The detour consists of three main structures including, the east tie-in to the bridge, the west tie-in to the island and the viaduct between the two tie-in structures.

The Department issued a December 14, 2006 memo entitled Strategy for South-South Detour Contract Completion which was approved by both Tony Anziano (Toll Bridge Program Manager) and Richard Land (Chief Engineer). This strategey memo provided for the Department to assume responsibility for the designs of the East Tie-In (ETI) and West Tie-In (WTI) portions of this contract, and incorporated seismic retrofit of the permanent Yerba Buena Island Transition Structure (YBITS).

Work on the WTI is being directed via several change orders to facilitate contract administration as plans and estimates become available. This change provides for the demolition of a portion of the existing structure and construction of one 1.8m diameter pile in preparation for the full demolition of the existing structure and roll-in of the new structure to take place on Labor Day weekend 2007. This change is in accordance with the strategey memo.

Compensation for this work shall be paid as extra work at an agreed lump sum price of $384,130.00. The cost shall be financed from the contract's contingency funds.

Supporting documents and information for this change including a cost analysis are on file with the project records.

CONCURRED BY:		
Construction Engineer:	Mahantesh Anigol M	Date 7/30/07
Bridge Engineer:	Bill Casey, Struct. Rep	Date 7/20/07
Project Engineer:	Hong Wong	Date 7/23/07
Project Manager:	Alec Melkonians	Date 7/23/07
FHWA Rep.:		Date
Environmental:		Date
Other (specify):	Robert Kobal, HQ Asst.Const.Coor	Date 7/26/07
Other (specify):	Bill Zanetich, Maintenance	Date 7/20/07
District Prior Approval By:		Date
HQ (Issue Approve) By:	Ken Darby, HQ CCO Engineer	Date 7/24/07
Resident Engineer's Signature:	M.U. Anigol	Date 7/30/07

ESTIMATE OF COST		
	THIS REQUEST	TOTAL TO DATE
ITEMS	$0.00	$0.00
FORCE ACCOUNT	$0.00	$0.00
AGREED PRICE	$384,130.00	$384,130.00
ADJUSTMENT	$0.00	$0.00
TOTAL	$384,130.00	$384,130.00

FEDERAL PARTICIPATION

☐ PARTICIPATING ☐ PARTICIPATING IN PART ☐ NONE
☐ NON-PARTICIPATING (MAINTENANCE) ☑ NON-PARTICIPATING

FEDERAL SEGREGATION (if more than one Funding Source or P.I.P. type)
☑ CCO FUNDED PER CONTRACT ☐ CCO FUNDED AS FOLLOWS

FEDERAL FUNDING SOURCE	PERCENT

ADA Notice: For individuals with sensory disabilities, this document is available in alternate formats. For information call: (916) 654-6410 or TDD (916) 654-3880 or write Records and Forms Management, 1120 N Street, MS-89, Sacramento, CA 95814.

CONTRACT CHANGE ORDER

Change Requested by: Engineer

CCO 72	Suppl. No. 0	Contract No. 04 - 0120R4	Road SF-80-12.6/13.2	FED. AID LOC.: ACBRIM-080-1(097)N

To: **CC MYERS INC**

You are directed to make the following changes from the plans and specifications or do the following described work not included in the plans and specifications for this contract. ***NOTE: This change order is not effective until approved by the Engineer.***

Description of work to be done, estimate of quantities and prices to be paid. (Segregate between additional work at contract price, agreed price and force account.) Unless otherwise stated, rates for rental of equipment cover only such time as equipment is actually used and no allowance will be made for idle time. This last percentage shown is the net accumulated increase or decrease from the original quantity in the Engineer's Estimate.

Extra Work at Force Account:

Provide temporary shuttle van service for transporting general public and passengers on Yerba Buena Island (YBI) in accordance with Section 10-1.135, Temporary Shuttle Van Service, of the Special Provisions and as authorized by the Engineer. The shuttle route and planned stops will be revised as authorized by the Engineer.

For this work, payment will be in accordance with Section 4-1.03D, Extra Work, of the Standard Specifications, and Sectior 5-1.24, Force Account Payment, of the Special Provisions, and no other compensation will be allowed therefor.

Estimated Cost of Extra Work at Force Account $500,000.00

Extra Work at Lump Sum:

Furnish additional labor, equipment, material, supplies, and other resources as required to construct the superstructure for the YBI Viaduct Replacement (Bridge No. 34-0006) in accordance with the approved CCO No. 61-S1 Package 3 plans and specifications, and the attached specifications and revised YBI Viaduct Replacement Sheets 2 through 6 of this change order.

All "Payment" clauses contained within CCO No. 61-S1 Package 3 and the attached specifications are amended such that all work performed under this change will be compensated for as extra work at agreed lump sum as part of this change order, and no other compensation will be allowed therefor.

Items of work not included as part of this change order:

1) CCO No. 61-S1 Package 3, West Tie-In Phase I YBI Viaduct Replacement: Stage II Demolition work, and work to move the YBI Viaduct Superstructure complete into place shall be compensated for under separate change order.
2) Compensation for all additional SWPPP work associated with this change shall be compensated for separately.
3) Time related costs and impacts as a result of this change shall be compensated for under separate change order.

Consideration of a time adjustment shall be deferred until completion of work specified herein. Determination of a commensurate time extension will be made in accordance with Section 8-1.07 Liquidated Damages of the Standard Specifications.

Total Cost of Extra Work at Lump Sum $10,596,900.00

CONTRACT CHANGE ORDER

Change Requested by: Engineer

CCO 72	Suppl. No. 0	Contract No. 04 - 0120R4	Road SF-80-12.6/13.2	FED. AID LOC.: ACBRIM-080-1(097)N

Estimated Cost: Increase ☑ Decrease ☐ $11,096,900.00

By reason of this order the time of completion will be adjusted as follows: Deferred

Submitted by

Signature	Resident Engineer	Date
M. U. Anigol / Bill Casey, SR	MAHANTESH ANIGOL	07/17/07

Approval Recommended by

Signature	SFOBB Construction Manager	Date
Mike Forner	MIKE FORNER	7/18/07

Engineer Approval by

Signature	SFOBB Construction Manager	Date
Michael Forner	MIKE FORNER	7/20/07

We the undersigned contractor, have given careful consideration to the change proposed and agree, if this proposal is approved, that we will provide all equipment, furnish the materials, except as may otherwise be noted above, and perform all services necessary for the work above specified, and will accept as full payment therefor the prices shown above.

NOTE: If you, the contractor, do not sign acceptance of this order, your attention is directed to the requirements of the specifications as to proceeding with the ordered work and filing a written protest within the time therein specified.

Contractor Acceptance by

Signature	(Print name and title)	Date
D. E. Himick	DANIEL E. HIMICK, PRESIDENT	7/19/07

The special provisions contained herein have been prepared by or under the direction of the following Registered Persons.

STRUCTURES

Steve Margaris

REGISTERED CIVIL ENGINEER

AMENDMENTS TO JULY 1999 STANDARD SPECIFICATIONS

UPDATED NOVEMBER 18, 2005

Amendments to the Standard Specifications set forth in these special provisions shall be considered as part of the Standard Specifications for the purposes set forth in Section 5-1.04, "Coordination and Interpretation of Plans, Standard Specifications and Special Provisions," of the Standard Specifications. Whenever either the term "Standard Specifications is amended" or the term "Standard Specifications are amended" is used in the special provisions, the text or table following the term shall be considered an amendment to the Standard Specifications. In case of conflict between such amendments and the Standard Specifications, the amendments shall take precedence over and be used in lieu of the conflicting portions.

SECTION 1: DEFINITIONS AND TERMS

Issue Date: January 28, 2005

Section 1-1.265, "Manual of Traffic Controls," of the Standard Specifications is amended to read:

1-1.265 MANUAL ON UNIFORM TRAFFIC CONTROL DEVICES

- The Manual on Uniform Traffic Control Devices for Streets and Highways, 2003 Edition (MUTCD) is administered by the Federal Highway Administration.

Section 1, "Definitions and Terms," of the Standard Specifications is amended by adding the following section:

CONTRACT NO. 04-0A20E4

CONTRACT CHANGE ORDER NO 72

SHEET 4 OF 41

5-1.01 WORKING DRAWINGS

Working drawings shall conform to the requirements in Section 5-1.02 " Plans and Working Drawings," of the Standard Specifications and these special provisions. Working drawings shall include supplements and calculations that are in addition to drawings.

Working drawings shall be submitted to the following location:

California Department of Transportation
Office of the Resident Engineer, Contract 04-0120F4
345 Burma Rd.
Oakland, CA 94607

Working drawings shall conform to the following:

A. For initial review, 6 sets of the working drawings, shall be submitted. After the Engineer has determined that a submittal is complete, 12 additional sets shall be submitted.
B. Drawings shall be 559 mm x 864 mm or 279 mm x 432 mm in size. Supplements and calculations shall be 215 mm x 280 mm in size.
C. For drawings, text size shall be nominally 2.8 mm high, minimum. For supplement and calculations, font size shall be 12, minimum.
D. Each working drawing sheet and each page of supplement or calculation, shall include the jobsite name of the structure as shown on the contract plans, District-County-Route-Kilometer Post, bridge number and contract number.
E. Text and details shall be legible and suitable for photocopying and reduction.
F. In addition to the paper copies of the working drawings, electronic files shall be submitted. Electronic files shall be portable document format (PDF) and shall be submitted on compact disk (CD) media. Each plan sheet shall be a separate PDF file on the CD. The electronic copy of the calculations and supplement shall be made into separate PDF files so that no more than 50 pages are included in a single file on the CD. The CD shall contain an index consisting of the file names and a description of the corresponding file contents. The files shall be listed in the sequence of: 1) index, 2) drawings, 3) supplement, and 4) calculations. If more than one CD is used for a given working drawing submittal, the index shall be included on each CD.
G. Microfilms are required for approved shop drawings and shall be only a 24x reduction. The edge of the corrected original tracing image shall be clearly visible and visually parallel with the edges of the page. A clear, legible symbol shall be provided on the upper left side of each page to show the amount of reduction, and a horizontal and vertical scale shall be provided on each reduced print to facilitate enlargement to original scale.
H. At the completion of the contract, one compiled set of all approved working drawings (in electronic form and including all corrections and revisions) shall be furnished to the Engineer. The index shall be the first file on the CD.
I. At the completion of the contract, one set of reduced prints on 75-g/m2 (minimum) bond paper, 279 mm x 432 mm in size, of the corrected original tracings of all approved working drawings, including all corrections and revisions shall be furnished to the Engineer. Reduced prints that are common to more than one structure shall be submitted

CONTRACT NO. 04-0120F4
CONTRACT CHANGE ORDER NO 72
SHEET 5 OF 41

for each structure. An index prepared specifically for the drawings for each structure containing sheet numbers and titles shall be included on the first reduced print in the set for each structure. Reduced prints for each structure shall be arranged in the order of drawing numbers shown in the index

Working drawings shall be stamped and signed by an engineer who is registered as a Civil Engineer in the State of California. When independently checked calculations are required, these calculations shall be stamped and signed by another engineer who is registered as a Civil Engineer in the State of California.

Working drawings shall be submitted sufficiently in advance of the start of the affected work to allow time for review by the Engineer and correction by the Contractor of the drawings without delaying the work. The time shall be proportional to the complexity of the work, but in no case shall the time be less than the review time as specified for the type of working drawings as required elsewhere in these special provisions.

The Engineer will review a working drawing submittal for completeness. Within three working days of the receipt of the submittal by the Engineer, the Engineer will notify the Contractor in writing if the submittal is determined to be incomplete. If the submittal is determined to be complete, twenty working days from the day of receipt shall be allowed for approval or return for correction of each submittal or resubmittal, unless specified otherwise in the special provisions.

Should the Engineer fail to review the complete working drawing submittal within the time specified, and the Contractor's controlling operation on the critical path is delayed (as determined by the Engineer) by the Engineer's failure to review within the time specified, an extension of time will be granted in conformance with the provisions in Section 8-1.07, "Liquidated Damages," of the Standard Specifications and in "Progress Schedule (Critical Path Method)," of these special provisions. Should the Engineer fail to review the complete working drawing submittal within the time specified, compensation, if any, will be made in accordance with Section 8-1.09, "Right of Way Delays," of the Standard Specifications, and "Time Related Overhead," of these special provisions.

5-1.__ PAYMENTS

Attention is directed to Sections 9-1.06, "Partial Payments," and 9-1.07, "Payment After Acceptance," of the Standard Specifications and these special provisions.

In determining the partial payments to be made to the Contractor, only the following listed materials will be considered for inclusion in the payment as materials furnished but not incorporated in the work:

A. Prestressing Steel (sealed containers only)
B. Bar Reinforcing Steel
C. Miscellaneous Metal
D. Bridge Deck Drainage
E. Joint Seal

5-1.__ PROJECT INFORMATION

The information in this section has been compiled specifically for this project and is made available for bidders and Contractors. Other information referenced in the Standard

CONTRACT NO. 05-1C1204
CONTRACT CHANGE ORDER NO 72
SHEET 9 OF 41

Specifications and these special provisions do not appear in this section. The information is subject to the conditions and limitations set forth in Section 2-1.03, "Examination of Plans, Specifications, Contract, and Site of Work," and Section 6-2, "Local Materials," of the Standard Specifications. Bidders and Contractors shall be responsible for knowing the procedures for obtaining information.

Plans of the existing bridges may be requested by fax from the Office of Structure Maintenance and Investigations, 1801 30th Street, Sacramento, CA, Fax (916) 227-8357.

Plans of the existing bridges available to bidders and Contractors are reproductions of the original contract plans, with significant changes noted, and working drawings, and do not necessarily show normal construction tolerances and variances. Where dimensions of new construction required by this contract are dependent on the dimensions of the existing bridges, the Contractor shall verify the controlling field dimensions and shall be responsible for adjusting dimensions of the work to fit existing conditions.

SECTION 8. MATERIALS

8-1.01 SUBSTITUTION OF NON-METRIC MATERIALS AND PRODUCTS

Only materials and products conforming to the requirements of the specifications shall be incorporated in the work. When metric materials and products are not available, and when approved by the Engineer, and at no cost to the State, materials and products in the United States Standard Measures which are of equal quality and of the required properties and characteristics for the purpose intended, may be substituted for the equivalent metric materials and products, subject to the following provisions:

A. Materials and products shown on the plans or in the special provisions as being equivalent may be substituted for the metric materials and products specified or detailed on the plans.

B. Before other non-metric materials and products will be considered for use, the Contractor shall furnish, at the Contractor's expense, evidence satisfactory to the Engineer that the materials and products proposed for use are equal to or better than the materials and products specified or detailed on the plans. The burden of proof as to the quality and suitability of substitutions shall be upon the Contractor and the Contractor shall furnish necessary information as required by the Engineer. The Engineer will be the sole judge as to the quality and suitability of the substituted materials and products and the Engineer's decision will be final.

C. When the Contractor elects to substitute non-metric materials and products, including materials and products shown on the plans or in the special provisions as being equivalent, the list of sources of material specified in Section 6-1.01, "Source of Supply and Quality of Materials," of the Standard Specification shall include a list of

CONTRACT NO. 04-012284
CONTRACT CHANGE ORDER NO 72
SHEET 7 OF 41

substitutions to be made and contract items involved. In addition, for a change in design or details, the Contractor shall submit plans and working drawings in conformance with the provisions in Section 5-1.02, "Plans and Working Drawings," of the Standard Specifications. The plans and working drawings shall be submitted at least 7 days before the Contractor intends to begin the work involved.

Unless otherwise specified, the following substitutions of materials and products will be allowed:

SUBSTITUTION TABLE FOR PLAIN WIRE REINFORCEMENT
ASTM Designation: A 82

METRIC SIZE SHOWN ON THE PLANS mm^2	SIZE TO BE SUBSTITUTED $inch^2 \times 100$
MW9	W1.4
MW10	W1.6
MW13	W2.0
MW15	W2.3
MW19	W2.9
MW20	W3.1
MW22	W3.5
MW25	W3.9, except W3.5 in piles only
MW26	W4.0
MW30	W4.7
MW32	W5.0
MW35	W5.4
MW40	W6.2
MW45	W6.5
MW50	W7.8
MW55	W8.5, except W8.0 in piles only
MW60	W9.3
MW70	W10.9, except W11.0 in piles only
MW80	W12.4
MW90	W14.0
MW100	W15.5

SUBSTITUTION TABLE FOR BAR REINFORCEMENT

METRIC BAR DESIGNATION NUMBER[1] SHOWN ON THE PLANS	BAR DESIGNATION NUMBER[2] TO BE SUBSTITUTED
10	3
13	4
16	5
19	6
22	7
25	8
29	9
32	10
36	11
43	14
57	18

[1]Bar designation numbers approximate the number of millimeters of the nominal diameter of the bars.

[2]Bar numbers are based on the number of eighths of an inch included in the nominal diameter of the bars.

No adjustment will be required in spacing or total number of reinforcing bars due to a difference in minimum yield strength between metric and non-metric bars.

SUBSTITUTION TABLE FOR SIZES OF:

(1) STEEL FASTENERS FOR GENERAL APPLICATIONS (ASTM Designation: A 307 or AASHTO Designation: M 314, Grade 36 or 55), and

(2) HIGH STRENGTH STEEL FASTENERS (ASTM Designation: A 325 or A 449)

METRIC SIZE SHOWN ON THE PLANS mm	SIZE TO BE SUBSTITUTED inch
6 or 6.35	1/4
8 or 7.94	5/16
10 or 9.52	3/8
11 or 11.11	7/16
13, 12.70, or M12	1/2
14 or 14.29	9/16
16, 15.88, or M16	5/8
19, 19.05, or M20	3/4
22, 22.22, or M22	7/8
24, 25, 25.40, or M24	1
29, 28.58, or M27	1-1/8
32, 31.75, or M30	1-1/4
35 or 34.93	1-3/8
38, 38.10, or M36	1-1/2
44 or 44.45	1-3/4
51 or 50.80	2
57 or 57.15	2-1/4
64 or 63.50	2-1/2
70 or 69.85	2-3/4
76 or 76.20	3
83 or 82.55	3-1/4
89 or 88.90	3-1/2
95 or 95.25	3-3/4
102 or 101.60	4

SUBSTITUTION TABLE FOR NOMINAL THICKNESS OF SHEET METAL

UNCOATED HOT AND COLD ROLLED SHEETS		HOT-DIPPED ZINC COATED SHEETS (GALVANIZED)	
METRIC THICKNESS SHOWN ON THE PLANS mm	GAGE TO BE SUBSTITUTED inch	METRIC THICKNESS SHOWN ON THE PLANS mm	GAGE TO BE SUBSTITUTED inch
7.94	0.3125	4.270	0.1681
6.07	0.2391	3.891	0.1532
5.69	0.2242	3.510	0.1382
5.31	0.2092	3.132	0.1233
4.94	0.1943	2.753	0.1084
4.55	0.1793	2.372	0.0934
4.18	0.1644	1.994	0.0785
3.80	0.1495	1.803	0.0710
3.42	0.1345	1.613	0.0635
3.04	0.1196	1.461	0.0575
2.66	0.1046	1.311	0.0516
2.28	0.0897	1.158	0.0456
1.90	0.0747	1.006 or 1.016	0.0396
1.71	0.0673	0.930	0.0366
1.52	0.0598	0.853	0.0336
1.37	0.0538	0.777	0.0306
1.21	0.0478	0.701	0.0276
1.06	0.0418	0.627	0.0247
0.91	0.0359	0.551	0.0217
0.84	0.0329	0.513	0.0202
0.76	0.0299	0.475	0.0187
0.68	0.0269	--------	--------
0.61	0.0239	--------	--------
0.53	0.0209	--------	--------
0.45	0.0179	--------	--------
0.42	0.0164	--------	--------
0.38	0.0149	--------	--------

CONTRACT NO. 64-0120R4

CONTRACT CHANGE ORDER NO 72

SHEET 10 OF 41

SUBSTITUTION TABLE FOR WIRE

METRIC THICKNESS SHOWN ON THE PLANS mm	WIRE THICKNESS TO BE SUBSTITUTED inch	GAGE NO.
6.20	0.244	3
5.72	0.225	4
5.26	0.207	5
4.88	0.192	6
4.50	0.177	7
4.11	0.162	8
3.76	0.148	9
3.43	0.135	10
3.05	0.120	11
2.69	0.106	12
2.34	0.092	13
2.03	0.080	14
1.83	0.072	15
1.57	0.062	16
1.37	0.054	17
1.22	0.048	18
1.04	0.041	19
0.89	0.035	20

SUBSTITUTION TABLE FOR PIPE PILES

METRIC SIZE SHOWN ON THE PLANS mm x mm	SIZE TO BE SUBSTITUTED inch x inch
PP 360 x 4.55	NPS 14 x 0.179
PP 360 x 6.35	NPS 14 x 0.250
PP 360 x 9.53	NPS 14 x 0.375
PP 360 x 11.12	NPS 14 x 0.438
PP 406 x 12.70	NPS 16 x 0.500
PP 460 x T	NPS 18 x T"
PP 508 x T	NPS 20 x T"
PP 559 x T	NPS 22 x T"
PP 610 x T	NPS 24 x T"
PP 660 x T	NPS 26 x T"
PP 711 x T	NPS 28 x T"
PP 762 x T	NPS 30 x T"
PP 813 x T	NPS 32 x T"
PP 864 x T	NPS 34 x T"
PP 914 x T	NPS 36 x T"
PP 965 x T	NPS 38 x T"
PP 1016 x T	NPS 40 x T"
PP 1067 x T	NPS 42 x T"
PP 1118 x T	NPS 44 x T"
PP 1219 x T	NPS 48 x T"
PP 1524 x T	NPS 60 x T"

The thickness in millimeters (T) represents an exact conversion of the thickness in inches (T").

SUBSTITUTION TABLE FOR CIDH CONCRETE PILING

METRIC SIZE SHOWN ON THE PLANS	ACTUAL AUGER SIZE TO BE SUBSTITUTED inches
350 mm	14
400 mm	16
450 mm	18
600 mm	24
750 mm	30
900 mm	36
1.0 m	42
1.2 m	48
1.5 m	60
1.8 m	72
2.1 m	84
2.4 m	96
2.7 m	108
3.0 m	120
3.3 m	132
3.6 m	144
4.0 m	156

SUBSTITUTION TABLE FOR STRUCTURAL TIMBER AND LUMBER

METRIC MINIMUM DRESSED DRY, SHOWN ON THE PLANS mm x mm	METRIC MINIMUM DRESSED GREEN, SHOWN ON THE PLANS mm x mm	NOMINAL SIZE TO BE SUBSTITUTED inch x inch
19x89	20x90	1x4
38x89	40x90	2x4
64x89	65x90	3x4
89x89	90x90	4x4
140x140	143x143	6x6
140x184	143x190	6x8
184x184	190x190	8x8
235x235	241x241	10x10
286x286	292x292	12x12

CONTRACT NO. 04-0120R4

CONTRACT CHANGE ORDER NO 72

SHEET 12 OF 41

SUBSTITUTION TABLE FOR NAILS AND SPIKES

METRIC COMMON NAIL, SHOWN ON THE PLANS Length, mm Diameter, mm	METRIC BOX NAIL, SHOWN ON THE PLANS Length, mm Diameter, mm	METRIC SPIKE, SHOWN ON THE PLANS Length, mm Diameter, mm	SIZE TO BE SUBSTITUTED Penny-weight
50.80 2.87	50.80 2.51	———	6d
63.50 3.33	63.50 2.87	———	8d
76.20 3.76	76.20 3.25	76.20 4.88	10d
82.55 3.76	82.55 3.25	82.55 4.88	12d
88.90 4.11	88.90 3.43	88.90 5.26	16d
101.60 4.88	101.60 3.76	101.60 5.72	20d
114.30 5.26	114.30 3.76	114.30 6.20	30d
127.00 5.72	127.00 4.11	127.00 6.68	40d
———	———	139.70 7.19	50d
———	———	152.40 7.19	60d

CONTRACT NO. 04-012284

CONTRACT CHANGE ORDER NO 72

SHEET 13 OF 41

SUBSTITUTION TABLE FOR IRRIGATION COMPONENTS

METRIC WATER METERS, TRUCK LOADING STANDPIPES, VALVES, BACKFLOW PREVENTERS, FLOW SENSORS, WYE STRAINERS, FILTER ASSEMBLY UNITS, PIPE SUPPLY LINES, AND PIPE IRRIGATION SUPPLY LINES SHOWN ON THE PLANS DIAMETER NOMINAL (DN) mm	NOMINAL SIZE TO BE SUBSTITUTED inch
15	1/2
20	3/4
25	1
32	1-1/4
40	1-1/2
50	2
65	2-1/2
75	3
100	4
150	6
200	8
250	10
300	12
350	14
400	16

Unless otherwise specified, substitutions of United States Standard Measures standard structural shapes corresponding to the metric designations shown on the plans and in conformance with the requirements in ASTM Designation: A 6/A 6M, Annex 2, will be allowed.

SECTION 8-2. CONCRETE

8-2.__ PORTLAND CEMENT CONCRETE

Portland cement concrete shall conform to the provisions in Section 90, "Portland Cement Concrete," of the Standard Specifications and these special provisions.

References to Section 90-2.01, "Portland Cement," of the Standard Specifications shall mean Section 90-2.01, "Cement," of the Standard Specifications.

Mineral admixture shall be combined with cement in conformance with the provisions in Section 90-4.08, "Required Use of Mineral Admixtures," of the Standard Specifications for the concrete materials specified in Section 56-2, "Roadside Signs," of the Standard Specifications.

The requirements of Section 90-4.08, "Required Use of Mineral Admixture," of the Standard Specifications shall not apply to Section 19-3.025C, "Soil Cement Bedding," of the Standard Specifications.

The Department maintains a list of sources of fine and coarse aggregate that have been approved for use with a reduced amount of mineral admixture in the total amount of cementitious material to be used. A source of aggregate will be considered for addition to the approved list if

CONTRACT NO. 04-0120R4
CONTRACT CHANGE ORDER NO 72
SHEET 14 OF 41

the producer of the aggregate submits to the Transportation Laboratory certified test results from a qualified testing laboratory that verify the aggregate complies with the requirements. Prior to starting the testing, the aggregate test shall be registered with the Department. A registration number can be obtained by calling (916) 227-7228. The registration number shall be used as the identification for the aggregate sample in correspondence with the Department. Upon request, a split of the tested sample shall be provided to the Department. Approval of aggregate will depend upon compliance with the specifications, based on the certified test results submitted, together with any replicate testing the Department may elect to perform. Approval will expire 3 years from the date the most recent registered and evaluated sample was collected from the aggregate source.

Qualified testing laboratories shall conform to the following requirements:

A. Laboratories performing ASTM Designation: C 1293 shall participate in the Cement and Concrete Reference Laboratory (CCRL) Concrete Proficiency Sample Program and shall have received a score of 3 or better on all tests of the previous 2 sets of concrete samples.
B. Laboratories performing ASTM Designation: C 1260 shall participate in the Cement and Concrete Reference Laboratory (CCRL) Pozzolan Proficiency Sample Program and shall have received a score of 3 or better on the shrinkage and soundness tests of the previous 2 sets of pozzolan samples.

Aggregates on the list shall conform to one of the following requirements:

A. When the aggregate is tested in conformance with the requirements in California Test 554 and ASTM Designation: C 1293, the average expansion at one year shall be less than or equal to 0.040 percent; or
B. When the aggregate is tested in conformance with the requirements in California Test 554 and ASTM Designation: C 1260, the average of the expansion at 16 days shall be less than or equal to 0.15 percent.

The amounts of cement and mineral admixture used in cementitious material shall be sufficient to satisfy the minimum cementitious material content requirements specified in Section 90-1.01, "Description," or Section 90-4.05, "Optional Use of Chemical Admixtures," of the Standard Specifications and shall conform to the following:

A. The minimum amount of cement shall not be less than 75 percent by mass of the specified minimum cementitious material content.
B. The minimum amount of mineral admixture to be combined with cement shall be determined using one of the following criteria:

1. When the calcium oxide content of a mineral admixture is equal to or less than 2 percent by mass, the amount of mineral admixture shall not be less than 15 percent by mass of the total amount of cementitious material to be used in the mix.
2. When the calcium oxide content of a mineral admixture is greater than 2 percent by mass, and any of the aggregates used are not listed on the approved list as specified in these special provisions, then the amount of mineral admixture shall not be less than 25 percent by mass of the total amount of cementitious material to be used in the mix.
3. When the calcium oxide content of a mineral admixture is greater than 2 percent by mass and the fine and coarse aggregates are listed on the approved list as specified in

CONTRACT NO. 04-012084
CONTRACT CHANGE ORDER NO 72
SHEET 15 OF 41

these special provisions, then the amount of mineral admixture shall not be less than 15 percent by mass of the total amount of cementitious material to be used in the mix.

4. When a mineral admixture that conforms to the provisions for silica fume in Section 90-2.04, "Admixture Materials," of the Standard Specifications is used, the amount of mineral admixture shall not be less than 10 percent by mass of the total amount of cementitious material to be used in the mix.
5. When a mineral admixture that conforms to the provisions for silica fume in Section 90-2.04, "Admixture Materials," of the Standard Specifications is used and the fine and coarse aggregates are listed on the approved list as specified in these special provisions, then the amount of mineral admixture shall not be less than 7 percent by mass of the total amount of cementitious material to be used in the mix.

C. The total amount of mineral admixture shall not exceed 35 percent by mass of the total amount of cementitious material to be used in the mix. Where Section 90-1.01, "Description," of the Standard Specifications specifies a maximum cementitious content in kilograms per cubic meter, the total mass of cement and mineral admixture per cubic meter shall not exceed the specified maximum cementitious material content.

SECTION 8-3. WELDING

8-3.__ WELDING

GENERAL

Flux cored welding electrodes conforming to the requirements of AWS A5.20 E6XT-4 or E7XT-4 shall not be used to perform welding for this project.

Wherever reference is made to the following AWS welding codes in the Standard Specifications, on the plans, or in these special provisions, the year of adoption for these codes shall be as listed:

AWS Code	Year of Adoption
D1.1	2006
D1.4	2005
D1.5	2002
D1.6	1999

Requirements of the AWS welding codes shall apply unless otherwise specified in the Standard Specifications, on the plans, or in these special provisions. Wherever the abbreviation AWS is used, it shall be equivalent to the abbreviations ANSI/AWS or AASHTO/AWS.

Section 6.1.1.1 of AWS D1.5 is replaced with the following:

Quality Control (QC) shall be the responsibility of the Contractor. As a minimum, the Contractor shall perform inspection and testing of each weld joint prior to welding, during welding, and after welding as specified in this section and as necessary to ensure that materials and workmanship conform to the requirements of the contract documents.

Unless otherwise specified, Sections 6.1.3 through 6.1.4.3 of AWS D1.1, Section 7.1.2 of AWS D1.4, and Sections 6.1.1.2 through 6.1.3.3 of AWS D1.5 are replaced with the following:

The QC Inspector shall be the duly designated person who acts for and on behalf of the Contractor for inspection, testing, and quality related matters for all welding.

Quality Assurance (QA) is the prerogative of the Engineer. The QA Inspector is the duly designated person who acts for and on behalf of the Engineer.

The QC Inspector shall be responsible for quality control acceptance or rejection of materials and workmanship, and shall be currently certified as an AWS Certified Welding Inspector (CWI) in conformance with the requirements in AWS QC1, "Standard for AWS Certification of Welding Inspectors."

The QC Inspector may be assisted by an Assistant QC Inspector provided that this individual is currently certified as an AWS Certified Associate Welding Inspector (CAWI) in conformance with the requirements in AWS QC1, "Standard for AWS Certification of Welding Inspectors." The Assistant QC Inspector may perform inspection under the direct supervision of the QC Inspector provided the assistant is always within visible and audible range of the QC Inspector. The QC Inspector shall be responsible for signing all reports and for determining if welded materials conform to workmanship and acceptance criteria. The ratio of QC Assistants to QC Inspectors shall not exceed 5 to 1.

When the term "Inspector" is used without further qualification, it shall refer to the QC Inspector.

When any work is welded in conformance with the provisions in Section 75, "Miscellaneous Metal," of the Standard Specifications, not including Section 75-1.035, "Bridge Joint Restrainer Units," of the Standard Specifications, Section 6.1.4 of AWS D1.1 is replaced with the following:

The QC Inspector shall be responsible for quality control acceptance or rejection of materials and workmanship and shall be currently certified as an AWS CWI in conformance with the requirements in AWS QC1, "Standard for AWS Certification of Welding Inspectors," or as a Welding Inspector Specialist (WIS) in conformance with the requirements in AWS B5.2, "Specification for the Qualification of Welding Inspector Specialists and Welding Inspector Assistants."

Section 6.14.6, "Personnel Qualification," of AWS D1.1, Section 7.8, "Personnel Qualification," of AWS D1.4, and Section 6.1.3.4, "Personnel Qualification," of AWS D1.5 are replaced with the following:

Personnel performing nondestructive testing (NDT) shall be qualified and certified in conformance with the requirements of the American Society for Nondestructive Testing (ASNT) Recommended Practice No. SNT-TC-1A and the Written Practice of the NDT firm. The Written Practice of the NDT firm shall meet or exceed the guidelines of the ASNT Recommended Practice No. SNT-TC-1A. Individuals who perform NDT, review the results, and prepare the written reports shall be either:

A. Certified NDT Level II technicians, or;
B. Level III technicians who hold a current ASNT Level III certificate in that discipline and are authorized and certified to perform the work of Level II technicians.

Section 6.5.4 of AWS D1.5 is replaced with the following:

The QC Inspector shall inspect and approve each joint preparation, assembly practice, welding technique, joint fit-up, and the performance of each welder, welding operator, and tack welder to make certain that the applicable requirements of this code and the approved Welding Procedure Specification (WPS) are met. The QC Inspector shall examine the work to make certain that it meets the requirements of Sections 3 and 6.26. The size and contour of all welds shall be measured using suitable gages. Visual inspection for cracks in welds and base metal, and for other discontinuities shall be aided by strong light, magnifiers, or such other devices as may be helpful. Acceptance criteria different from those specified in this code may be used when approved by the Engineer.

Section 6.6.5, "Nonspecified NDT Other than Visual," of AWS D1.1, Section 7.6.5 of AWS D1.4 and Section 6.6.5 of AWS D1.5 shall not apply.

For any welding, the Engineer may direct the Contractor to perform NDT that is in addition to the visual inspection or NDT specified in the AWS or other specified welding codes, in the Standard Specifications, or in these special provisions. Except as provided for in these special provisions, additional NDT required by the Engineer, and associated repair work, will be paid for as extra work as provided in Section 4-1.03D, "Extra Work," of the Standard Specifications. Prior to release of welded material by the Engineer, if testing by NDT methods other than those originally specified discloses an attempt to defraud or reveals a gross nonconformance, all costs associated with the repair of the deficient area, including NDT of the weld and of the repair, and any delays caused by the repair, shall be at the Contractor's expense. A gross nonconformance is defined as the sum of planar type rejectable indications in more than 20 percent of the tested length.

When less than 100 percent of NDT is specified for any weld, it is expected that the entire length of weld meet the specified acceptance-rejection criteria. Should any welding deficiencies be discovered by additional NDT directed or performed by the Engineer that utilizes the same NDT method as that originally specified, all costs associated with the repair of the deficient area, including NDT of the weld and of the weld repair, and any delays caused by the repair, shall be at the Contractor's expense.

Repair work to correct welding deficiencies discovered by visual inspection directed or performed by the Engineer, and any associated delays or expenses caused to the Contractor by performing these repairs, shall be at the Contractor's expense.

The Engineer shall have the authority to verify the qualifications or certifications of any welder, QC Inspector, or NDT personnel to specified levels by retests or other means approved by the Engineer.

Inspection and approval of all joint preparations, assembly practices, joint fit-ups, welding techniques, and the performance of each welder, welding operator, and tack welder shall be documented by the QC Inspector on a daily basis for each day welding is performed. For each inspection, including fit-up, Welding Procedure Specification (WPS) verification, and final weld inspection, the QC Inspector shall confirm and document compliance with the requirements of the AWS or other specified code criteria and the requirements of these special provisions on all welded joints before welding, during welding, and after the completion of each weld.

In addition to the requirements specified in the applicable code, the period of effectiveness for a welder's or welding operator's qualification shall be a maximum of 3 years for the same weld process, welding position, and weld type. If welding will be performed without gas shielding, then qualification shall also be without gas shielding. Excluding welding of fracture critical members, a valid qualification at the beginning of work on a contract will be acceptable

for the entire period of the contract, as long as the welder's or welding operator's work remains satisfactory.

In addition to the requirements of AWS D1.1, welding procedures qualification for work welded in conformance with that code shall conform to the following requirements:

A. The travel speed, amperage, and voltage values that are used for tests conducted per AWS D1.1, Section 4.1.1, shall be consistent for each pass in a weld joint and shall in no case vary by more than ±10 percent for travel speed, ±10 percent for amperage, and ±7 percent for voltage as measured from a predetermined target value or average within each weld pass. The travel speed shall in no case vary by more than ±15 percent when using submerged arc welding.
B. When a nonstandard weld joint is to be made using a combination of WPSs, a single test may be conducted combining the WPSs to be used in production, provided the essential variables, including weld bead placement, of each process are limited to those established in Table 4.5.

In addition to the requirements of AWS D1.5, Section 5.12 or 5.13, welding procedures qualification for work welded in conformance with that code shall conform to the following requirements:

A. Unless considered prequalified, fillet welds shall be qualified in each position. The fillet weld soundness test shall be conducted using the essential variables of the WPS as established by the Procedure Qualification Record (PQR).
B. For qualification of joints that do not conform to Figures 2.4 and 2.5 of AWS D1.5, a minimum of two WPS qualification tests are required. The tests shall be conducted using both Figure 5.1 and Figure 5.3. The test conforming to Figure 5.1 shall be conducted in conformance with AWS D1.5, Section 5.12 or 5.13. The test conforming to Figure 5.3 shall be conducted using the welding electrical parameters that were established for the test conducted conforming to Figure 5.1. The ranges of welding electrical parameters established during welding per Figure 5.1 in conformance with AWS D1.5, Section 5.12, shall be further restricted according to the limits in Table 5.3 during welding per Figure 5.3.
C. Multiple zones within a weld joint may be qualified. The travel speed, amperage, and voltage values that are used for tests conducted per AWS D1.5 Section 5.13 shall be consistent for each pass in a weld joint, and shall in no case vary by more than ±10 percent for travel speed, ±10 percent for amperage, and ±7 percent for voltage as measured from a predetermined target value or average within each weld pass or zone. The travel speed shall in no case vary by more than ±15 percent when using submerged arc welding.
D. For a WPS qualified in conformance with AWS D1.5 Section 5.13, the values to be used for calculating ranges for current and voltage shall be based on the average of all weld passes made in the test. Heat input shall be calculated using the average of current and voltage of all weld passes made in the test for a WPS qualified in conformance with Section 5.12 or 5.13.
E. Macroetch tests are required for WPS qualification tests, and acceptance shall be per AWS D1.5 Section 5.19.3.
F. When a nonstandard weld joint is to be made using a combination of WPSs, a test conforming to Figure 5.3 may be conducted combining the WPSs to be used in

CONTRACT NO. 04-0120U4 CONTRACT CHANGE ORDER NO 72 SHEET 17 OF 41

production, provided the essential variables, including weld bead placement, of each process are limited to those established in Table 5.3.

G. Prior to preparing mechanical test specimens, the PQR welds shall be inspected by visual and radiographic tests. Backing bar shall be 75 mm in width and shall remain in place during NDT testing. Results of the visual and radiographic tests shall comply with AWS D1.5 Section 6.26.2, excluding Section 6.26.2.2. Test plates that do not comply with both tests shall not be used.

WELDING QUALITY CONTROL

Welding quality control shall conform to the requirements in the AWS or other specified welding codes, the Standard Specifications, and these special provisions.

Unless otherwise specified, welding quality control shall apply when any work is welded in conformance with the provisions in Section 49, "Piling," Section 52, "Reinforcement," Section 55, "Steel Structures," or Section 75-1.035, "Bridge Joint Restrainer Units," of the Standard Specifications.

All welding will require inspection by the Engineer. The Contractor shall request inspection at least 3 working days prior to the beginning of welding for locations within California and 5 working days for locations outside of California. The Contractor shall request inspection at:

http://www.dot.ca.gov/hq/esc/Translab/smbforms.htm

Continuous inspection shall be provided when any welding is being performed. Continuous inspection, as a minimum, shall include having a QC Inspector within such close proximity of all welders or welding operators so that inspections by the QC Inspector of each welding operation at each welding location does not lapse for a period exceeding 30 minutes.

When joint weld details that are not prequalified to the details of Section 3 of AWS D1.1 or to the details of Figure 2.4 or 2.5 of AWS D1.5 are proposed for use in the work, the joint details, their intended locations, and the proposed welding parameters and essential variables, shall be approved by the Engineer. The Contractor shall allow the Engineer 2 weeks to complete the review of the proposed joint detail locations. In the event the Engineer fails to complete the review within the time allowed, and if, in the opinion of the Engineer, completion of the work is delayed or interfered with by reason of the Engineer's delay in completing the review, the Contractor will be compensated for any resulting loss, and an extension of time will be granted, in the same manner as provided for in Section 8-1.09, "Right of Way Delays," of the Standard Specifications. Upon approval of the proposed joint detail locations and qualification of the proposed joint details, welders and welding operators using these details shall perform a qualification test plate using the WPS variables and the joint detail to be used in production. The test plate shall have the maximum thickness to be used in production and a minimum length of 460 mm. The test plate shall be mechanically and radiographically tested. Mechanical and radiographic testing and acceptance criteria shall be as specified in the applicable AWS codes.

The Engineer will witness all qualification tests for WPSs that were not previously approved by the Department. Unless otherwise specified, an approved independent third party will witness the qualification tests for welders or welding operators. The independent third party shall be a current CWI and shall not be an employee of the contractor performing the welding. The Contractor shall allow the Engineer 2 weeks to review the qualifications and copy of the current certification of the independent third party. In the event the Engineer fails to complete the review within the time allowed, and if, in the opinion of the Engineer, completion of the work is delayed or interfered with by reason of the Engineer's delay in completing the review, the Contractor will

CONTRACT NO. 04-0120K4
CONTRACT CHANGE ORDER NO 72
SHEET 20 OF 41

be compensated for any resulting loss, and an extension of time will be granted, in the same manner as provided for in Section 8-1.09, "Right of Way Delays," of the Standard Specifications. The Contractor shall notify the Engineer one week prior to performing any qualification tests. Witnessing of qualification tests by the Engineer shall not constitute approval of the intended joint locations, welding parameters, or essential variables.

The Contractor shall designate in writing a welding Quality Control Manager (QCM). The QCM shall be responsible directly to the Contractor for the quality of welding, including materials and workmanship, performed by the Contractor and subcontractors.

The QCM shall be the sole individual responsible to the Contractor for submitting, receiving, reviewing, and approving all correspondence, required submittals, and reports to and from the Engineer. The QCM shall be a registered professional engineer or shall be currently certified as a CWI.

Unless the QCM is hired by a subcontractor providing only QC services, the QCM shall not be employed or compensated by any subcontractor, or by other persons or entities hired by subcontractors, who will provide other services or materials for the project. The QCM may be an employee of the Contractor.

Welding inspection personnel or NDT firms to be used in the work shall not be employed or compensated by any subcontractor, or by other persons or entities hired by subcontractors, who will provide other services or materials for the project, except for the following conditions:

A. The work is welded in conformance with AWS D1.5 and is performed at a permanent fabrication or manufacturing facility that is certified under the AISC Quality Certification Program, Category Cbr, Major Steel Bridges and Fracture Critical endorsement F, when applicable.
B. The welding is performed on pipe pile material at a permanent pipe manufacturing facility authorized to apply the American Petroleum Institute (API) monogram for API 5L pipe.

For welding performed at such facilities, the inspection personnel or NDT firms may be employed or compensated by the facility performing the welding provided the facility maintains a QC program that is independent from production.

Prior to submitting the Welding Quality Control Plan (WQCP) required herein, a prewelding meeting between the Engineer, the Contractor's QCM, and a representative from each entity performing welding or inspection for this project, shall be held to discuss the requirements for the WQCP.

The Contractor shall submit to the Engineer, in conformance with the provisions in Section 5-1.02, "Plans and Working Drawings," of the Standard Specifications, 2 copies of a separate WQCP for each subcontractor or supplier for each item of work for which welding is to be performed.

The Contractor shall allow the Engineer 2 weeks to review the WQCP submittal after a complete plan has been received. No welding shall be performed until the WQCP is approved in writing by the Engineer. In the event the Engineer fails to complete the review within the time allowed, and if, in the opinion of the Engineer, completion of the work is delayed or interfered with by reason of the Engineer's delay in completing the review, the Contractor will be compensated for any resulting loss, and an extension of time will be granted, in the same manner as provided for in Section 8-1.09, "Right of Way Delays," of the Standard Specifications.

An amended WQCP or any addendum to the approved WQCP shall be submitted to, and approved in writing by the Engineer, for proposed revisions to the approved WQCP. An

amended WQCP or addendum will be required for revisions to the WQCP, including but not limited to a revised WPS; additional welders; changes in NDT firms, QC, or NDT personnel or procedures; or updated systems for tracking and identifying welds. The Engineer shall have one week to complete the review of the amended WQCP or addendum. Work affected by the proposed revisions shall not be performed until the amended WQCP or addendum has been approved. In the event the Engineer fails to complete the review within the time allowed, and if, in the opinion of the Engineer, completion of the work is delayed or interfered with by reason of the Engineer's delay in completing the review, the Contractor will be compensated for any resulting loss, and an extension of time will be granted, in the same manner as provided for in Section 8-1.09, "Right of Way Delays," of the Standard Specifications.

Information regarding the contents, format, and organization of a WQCP, is available at the Transportation Laboratory and at:

http://www.dot.ca.gov/hq/esc/Translab/smbresources.htm

After final approval of the WQCP, amended WQCP, or addendum, the Contractor shall submit 7 copies to the Engineer of the approved documents. A copy of the Engineer approved document shall be available at each location where welding is to be performed.

A daily production log for welding shall be kept for each day that welding is performed. The log shall clearly indicate the locations of all welding. The log shall include the welders' names, amount of welding performed, any problems or deficiencies discovered, and any testing or repair work performed, at each location. The daily report from each QC Inspector shall also be included in the log.

The following items shall be included in a Welding Report that is to be submitted to the Engineer within 2 weeks following the performance of any welding:

A. A daily production log.
B. Reports of all visual weld inspections and NDT.
C. Radiographs and radiographic reports, and other required NDT reports.
D. A summary of welding and NDT activities that occurred during the reporting period.
E. Reports of each application of heat straightening.
F. A summarized log listing the rejected lengths of weld by welder, position, process, joint configuration, and piece number.
G. Documentation that the Contractor has evaluated all radiographs and other nondestructive tests and corrected all rejectable deficiencies, and that all repaired welds have been reexamined using the required NDT and found acceptable.

The following information shall be clearly written on the outside of radiographic envelopes: name of the QCM, name of the nondestructive testing firm, name of the radiographer, date, contract number, complete part description, and all included weld numbers, report numbers, and station markers or views, as detailed in the WQCP. In addition, all interleaves shall have clearly written on them the part description and all included weld numbers and station markers or views, as detailed in the WQCP. A maximum of 2 pieces of film shall be used for each interleave.

Reports of all visual inspections and NDT shall be signed by the inspector or technician and submitted daily to the QCM for review and signature prior to submittal to the Engineer. Corresponding names shall be clearly printed or typewritten next to all signatures. Reports of all NDT, whether specified, additional, or informational, performed by the Contractor shall be submitted to the Engineer.

CONTRACT NO. 04-012684 CONTRACT CHANGE ORDER NO 12
SHEET 22 OF 41

The Engineer will review the Welding Report to determine if the Contractor is in conformance with the WQCP. Unless otherwise specified, the Engineer shall be allowed 2 weeks to review the report and respond in writing after the complete Welding Report has been received. Prior to receiving notification from the Engineer of the Contractor's conformance with the WQCP, the Contractor may encase in concrete or cover welds for which the Welding Report has been submitted. However, should the Contractor elect to encase or cover those welds prior to receiving notification from the Engineer, it is expressly understood that the Contractor shall not be relieved of the responsibility for incorporating material in the work that conforms to the requirements of the plans and specifications. Material not conforming to these requirements will be subject to rejection. Should the Contractor elect to wait to encase or cover welds pending notification by the Engineer, and in the event the Engineer fails to complete the review within the time allowed, and if, in the opinion of the Engineer, completion of the work is delayed or interfered with by reason of the Engineer's delay in completing the review, the Contractor will be compensated for any resulting loss, and an extension of time will be granted, in the same manner as provided for in Section 8-1.09, "Right of Way Delays," of the Standard Specifications.

In addition to the requirements in AWS D1.1 and AWS D1.5, second-time excavations of welds or base metal to repair unacceptable discontinuities, regardless of NDT method, and all repairs of cracks require prior approval of the Engineer.

The Engineer shall be notified immediately in writing when welding problems, deficiencies, base metal repairs, or any other type of repairs not submitted in the WQCP are discovered, and also of the proposed repair procedures to correct them. For requests to perform second-time repairs or repairs of cracks, the Contractor shall include an engineering evaluation of the proposed repair. The engineering evaluation, at a minimum, shall address the following:

A. What is causing each defect?
B. Why the repair will not degrade the material properties?
C. What steps are being taken to prevent similar defects from happening again?

The Contractor shall allow the Engineer one week to review these procedures. No remedial work shall begin until the repair procedures are approved in writing by the Engineer. In the event the Engineer fails to complete the review within the time allowed, and if, in the opinion of the Engineer, completion of the work is delayed or interfered with by reason of the Engineer's delay in completing the review, the Contractor will be compensated for any resulting loss, and an extension of time will be granted, in the same manner as provided for in Section 8-1.09, "Right of Way Delays," of the Standard Specifications.

The QCM shall sign and furnish to the Engineer, a Certificate of Compliance in conformance with the provisions in Section 6-1.07, "Certificates of Compliance," of the Standard Specifications for each item of work for which welding was performed. The certificate shall state that all of the materials and workmanship incorporated in the work, and all required tests and inspections of this work, have been performed in conformance with the details shown on the plans, the Standard Specifications, and these special provisions.

PAYMENT

Full compensation for conforming to the requirements of "Welding" shall be considered as included in the contract prices paid for the various items of work involved and no additional compensation will be allowed therefor.

CONTRACT NO. 04-012084
CONTRACT CHANGE ORDER NO 72
SHEET 23 OF 41

SECTION 9. DESCRIPTION OF BRIDGE WORK

The bridge work to be done consists, in general, of removing existing bridge and constructing bridge superstructure on falsework and moving it and lowering it on preconstructed columns as shown on the plans:

YBI Viaduct Replacement
(Bridge No 34-0006)

SECTION 10. CONSTRUCTION DETAILS

SECTION 10-1. GENERAL

10-1.01 ORDER OF WORK

Order of work shall conform to the provisions in Section 5-1.05, "Order of Work," of the Standard Specifications and these special provisions.

Bridge removal and construction sequence shall be according to the sequence shown on the plans.

10-1.__ TEMPORARY RAILING

Temporary railing (Type K) shall be placed as shown on the plans, as specified in the Standard Specifications or these special provisions or where ordered by the Engineer and shall conform to the provisions in Section 12, "Construction Area Traffic Control Devices," of the Standard Specifications and these special provisions.

Reflectors on temporary railing (Type K) shall conform to the provisions in "Prequalified and Tested Signing and Delineation Materials" of these special provisions.

Attention is directed to "Public Safety" and "Order of Work" of these special provisions.

Temporary railing (Type K) placed in conformance with the provisions in "Public Safety" of these special provisions will be neither measured nor paid for.

10-1.__ EXISTING HIGHWAY FACILITIES

The work performed in connection with various existing highway facilities shall conform to the provisions in Section 15, "Existing Highway Facilities," of the Standard Specifications and these special provisions.

Existing footing concrete which is below ground and outside of the footing limits shown on the contract plans or original contract plans shall be removed as directed by the Engineer and such work will be paid for as extra work as provided in Section 4-1.03D, "Extra Work," of the Standard Specifications.

BRIDGE REMOVAL

Removing bridges or portions of bridges shall conform to the provisions in Section 15-4, "Bridge Removal," of the Standard Specifications and these special provisions.

Remove existing bridge as shown on the plans.

Removed materials that are not to be salvaged or used in the reconstruction shall become the property of the Contractor and shall be disposed of in conformance with the provisions in Section 7-1.13, "Disposal of Material Outside the Highway Right of Way," of the Standard Specifications.

The Contractor shall submit a complete bridge removal plan to the Engineer for each bridge listed above, detailing procedures, sequences, and all features required to perform the removal in a safe and controlled manner.

The bridge removal plan shall include, but not be limited to the following:

A. The removal sequence, including staging of removal operations.
B. Equipment locations on the structure during removal operations.
C. Temporary support shoring or temporary bracing.
D Locations where work is to be performed over traffic or utilities.
E. Details, locations, and types of protective covers to be used.
F. Measures to assure that people, property, utilities, and improvements will not be endangered.

When protective covers are required for removal of portions of a bridge, or when superstructure removal works on bridges are involved, the Contractor shall submit working drawings, with design calculations, to the Engineer for the proposed bridge removal plan, and the bridge removal plan shall be prepared and signed by an engineer who is registered as a Civil Engineer in the State of California. The design calculations shall be adequate to demonstrate the stability of the structure during all stages of the removal operations. Calculations shall be provided for each stage of bridge removal and shall include dead and live load values assumed in the design of protective covers. At a minimum, a stage will be considered to be removal of the deck, the soffit, or the girders, in any span; or walls, bent caps, or columns at support locations.

Temporary support shoring, temporary bracing, and protective covers, as required, shall be designed and constructed in conformance with the provisions in Section 51-1.06, "Falsework," of the Standard Specifications and these special provisions.

The assumed horizontal load to be resisted by the temporary support shoring and temporary bracing, for removal operations only, shall be the sum of the actual horizontal loads due to equipment, construction sequence or other causes, and an allowance for wind, but in no case shall the assumed horizontal load to be resisted in any direction be less than 5 percent of the total dead load of the structure to be removed.

Temporary support shoring, temporary bracing, and protective covers shall not encroach closer than 2.4 m horizontally from the edge or 4.6 m vertically above any traffic lane or shoulder that is open to public traffic.

The bridge removal plan shall conform to the provisions in Section "Working Drawings" of these special provisions. The number of sets of drawings, design calculations, and unless otherwise specified in the following table, the time for reviewing bridge removal plans shall be the same as specified for falsework working drawings in Section 51-1.06A, "Falsework Design and Drawings," of the Standard Specifications.

The following additional requirements apply to the removal of bridges or portions of bridges that are closed to public traffic:

CONTRACT NO. 04-0120E4
CONTRACT CHANGE ORDER NO 12
SHEET 25 OF 41

A. The closure of roadways to public traffic shall conform to the provisions in "Order of Work" and "Maintaining Traffic" of these special provisions.

B. Prior to closing a roadway to traffic to accommodate bridge removal operations, the Contractor shall have all necessary workers, materials, and equipment at the site as needed to proceed with the removal work in an expeditious manner. While the roadway is closed to public traffic, work shall be pursued promptly and without interruption until the roadway is reopened to public traffic.

C. Bridge removal operations shall be performed during period of time that the roadway is closed to public traffic.

D. Temporary support shoring and temporary bracing shall be used when necessary to insure the stability of the bridge.

E. During periods when the roadway is closed to public traffic, debris from bridge removal operations may be allowed to fall directly onto the lower roadway provided adequate protection is furnished for all highway facilities. The minimum protection for paved areas shall be a 0.6-m thick earthen pad or a 25-mm thick steel plate placed over the area where debris can fall. Prior to reopening the roadway to public traffic, all debris, protective pads, and devices shall be removed and the roadway swept clean with wet power sweepers or equivalent methods.

F. The removal operations shall be conducted in such a manner that the portion of the structure not yet removed remains in a stable condition at all times. For bridge removal that requires the Contractor's registered engineer to prepare and sign the bridge removal plan, the Contractor's registered engineer shall be present at all times when bridge removal operations are in progress. The Contractor's registered engineer shall inspect the bridge removal operation and report in writing on a daily basis the progress of the operation and the status of the remaining structure. A copy of the daily report shall be available at the site of the work at all times. Should an unplanned event occur or the bridge operation deviate from the approved bridge removal plan, the Contractor's registered engineer shall submit immediately to the Engineer for approval, the procedure of operation proposed to correct or remedy the occurrence.

10-1.__ PRESTRESSING CONCRETE

Prestressing concrete shall conform to the provisions in Section 50, "Prestressing Concrete," of the Standard Specifications and these special provisions.

Attention is directed to Sections "Working Drawings," "Order of Work," and "Falsework," of these special provisions.

Prestressing concrete shall consist of the following items as listed in the Engineer's Estimates:

A. Prestressing Cast-In-Place Concrete, Longitudinal:
   Prestressing cast-in-place edge beams

B. Prestressing Cast-In-Place Concrete, Transverse:
   Prestressing cast-in-place transverse girders

The prestressing sequence shall conform to the requirements shown on the plans.

The contract lump sum price paid for prestressing concrete of the types listed in Engineer's Estimate shall include full compensation for furnishing all labor, materials, tools, equipment and incidentals, and for doing all work involved in furnishing, placing and tensionsing the prestressing in cast-in-place concrete structure, complete in place, as shown on the plans, as specified in the Standard Specifications and these special provisions, and as directed by the Engineer.

CONTRACT NO. 04-0J204
CONTRACT CHANGE ORDER NO 72
SHEET 26 OF 41

Full compensation for furnishing and placing prestress bar sheathing for future prestressing shall be considered as included in the contract lump sum price paid for prestressing cast-in-place concrete, transverse and no additional compensation will be allowed therefor.

10-1.__ CONCRETE STRUCTURES

Portland cement concrete structures shall conform to the provisions in Section 51, "Concrete Structures," of the Standard Specifications and these special provisions.

Neoprene pad shall be furnished and installed at top of columns in conformance with the details shown on the plans, the provisions in the Standard Specifications, and these special provisions.

Furnishing and installing neoprene pad shall conform to the requirements for strip waterstops as provided in Section 51-1.145, "Strip Waterstops," of the Standard Specifications, except that the protective board will not be required.

Forms used to support the deck of cast-in-place box girders or to form the voids of precast members may remain in place, provided the portions of the forms which obstruct access openings or conflict with utility facilities are removed and the forming system employed leaves no sharp projections into the cells or voids.

Materials for access opening covers in soffits of new cast-in-place concrete box girder bridges shall conform to the provisions for materials in Section 75-1.03, "Miscellaneous Bridge Metal," of the Standard Specifications.

FALSEWORK

Falsework shall conform to the provisions in Section 51, "Concrete Structures," of the Standard Specifications and these special provisions.

Attention is directed to "Railroad Relations and Insurance" of these special provisions for additional requirements for falsework over railroads.

Welding and Nondestructive Testing

Welding of steel members, except for previously welded splices and except for when fillet welds are used where load demands are less than or equal to 175 N/mm for each 3 mm of fillet weld, shall conform to AWS D1.1 or other recognized welding standard. The welding standard to be utilized shall be specified by the Contractor on the working drawings. Previously welded splices for falsework members are defined as splices made prior to the member being shipped to the project site.

Splices made by field welding of steel beams at the project site shall undergo nondestructive testing (NDT). At the option of the Contractor, either ultrasonic testing (UT) or radiographic testing (RT) shall be used as the method of NDT for each field weld and any repair made to a previously welded splice in a steel beam. Testing shall be performed at locations selected by the Contractor. The length of a splice weld where NDT is to be performed, shall be a cumulative weld length equal to 25 percent of the original splice weld length. The cover pass shall be ground smooth at the locations to be tested. The acceptance criteria shall conform to the requirements of AWS D1.1, Section 6, for cyclically loaded nontubular connections subject to tensile stress. If repairs are required in a portion of the weld, additional NDT shall be performed on the repaired sections. The NDT method chosen shall be used for an entire splice evaluation including any required repairs.

For all field welded splices, the Contractor shall furnish to the Engineer a letter of certification which certifies that all welding and NDT, including visual inspection, are in conformance with the specifications and the welding standard shown on the approved working drawings. This letter of certification shall be signed by an engineer who is registered as a Civil Engineer in the State of California and shall be provided prior to placing any concrete for which the falsework is being erected to support.

For previously welded splices, the Contractor shall determine and perform all necessary testing and inspection required to certify the ability of the falsework members to sustain the stresses required by the falsework design. This welding certification shall be in writing, shall be signed by an engineer who is registered as a Civil Engineer in the State of California, and shall be provided prior to placing any concrete for which the falsework is being erected to support.

The Contractor's engineer who signs the falsework drawings shall also certify in writing that the falsework is constructed in conformance with the approved drawings and the contract specifications prior to placing concrete. This certification shall include performing any testing necessary to verify the ability of the falsework members to sustain the stresses required by the falsework design. The engineer who signs the drawings may designate a representative to perform this certification. Where falsework contains openings for railroads, vehicular traffic, or pedestrians, the designated representative shall be qualified to perform this work, shall have at least three years of combined experience in falsework design or supervising falsework construction, and shall be registered as a Civil Engineer in the State of California. For other

CONTRACT NO. 04-2C1204
CONTRACT CHANGE ORDER NO 12
SHEET 28 OF 41

falsework, the designated representative shall be qualified to perform this work and shall have at least three years of combined experience in falsework design or supervising falsework construction. The Contractor shall certify the experience of the designated representative in writing and provide supporting documentation demonstrating the required experience if requested by the Engineer.

10-1. Grouting

Grout for grouting the hole at column pipe keys shall conform to the provisions in Section 50-1.09, "Bonding and Grouting," of the Standard Specifications, the details shown on the plans and these special provisions.

The Contractor shall ensure that the area to be grouted is completely filled with grout without voids.

Full compensation for grouting pipe keys as shown on the plans shall be considered as included in the contract price paid per cubic meter for structural concrete, bridge and no separate payment will be made therefore.

10-1.__ SEALING JOINTS

Joints in concrete bridge decks and joints between concrete structures and concrete approach slabs shall be sealed in conformance with the details shown on the plans, the provisions in Section 51, "Concrete Structures," of the Standard Specifications, and these special provisions.

Where polyurethane seals are shown on the plans, a silicone sealant conforming to the provisions in Section 51–1.12F, "Sealed Joints," of the Standard Specifications may be used.

When ordered by the Engineer, a joint seal larger than called for by the Movement Rating shown on the plans shall be furnished and installed. Payment to the Contractor for furnishing the larger seal and for saw cutting the increment of additional depth of groove required will be determined as provided in Section 4-1.03, "Changes," of the Standard Specifications.

10-1. MOVE BRIDGE

Move bridge shall consist of jacking, moving and lowering bridge superstructure on preconstructed columns in conformance with the details shown on the plans and these special provisions.

The Contractor shall design, furnish, operate, monitor and remove the jacking and support system with appurtenant items as necessary to jack, move and lower the structure in a controlled manner.

The construction sequence and application of jacking loads shall be as shown on the plans. Proposed changes to the construction sequence and application of jacking loads shall be subject to the Engineer's approval.

Attention is directed to Section "Maintaining Traffic" and "Falsework" of these special provisions.

The Contractor shall provide a designated field engineer who is registered as a Civil Engineer in the State California. The Contractor's designated field engineer shall be present at the jobsite throughout the moving operations.

BRIDGE MOVE WORKING DRAWINGS

The Contractor shall submit to the Engineer working drawings and design calculations for moving bridge. Such drawings and design calculations shall be signed by an engineer who is registered as a Civil Engineer in the State of California.

In addition to the requirements in Section 51-1.06A, "Falsework Design and Drawings," of the Standard Specifications, bridge move working drawings shall include the following:

A. Complete description and details of methods, equipment and sequence for jacking, moving and lowering the structure in a safe and controlled manner.
B. Complete details of methods, equipment and sequence of operations to achieve final lines and grades relative to the existing structure as shown on the plans
C. Description, location, and value of all loads including construction equipment loads
D. Details for:
    1. Connections between the jacking system and the structure, including anchor bolt layouts
    2. Jacking system with appurtenant items
    3. Vertical and horizontal displacement monitoring system, control points, and schedule for taking measurements
    4. Modification to the falsework for the jacking and moving operation
    5. Restoration of the structure after removal of the jacking system
E. Design calculations for:
    1. Connections between the jacking system and the structure
    2. Stresses in the structure due to jacking and moving operations
    3. Lateral stiffness of the jacking and moving system
    4. Modification to the falsework for the jacking operation
F. Name of the Contractor's designated field engineer

After complete working drawings and all supporting data are submitted, the Contractor shall allow 4 weeks for the Engineer's review of each submittal.

The design load for jacking bridge shall consist of the largest combined load demand from the following:

A. The dead load of the superstructure, horizontal loads, and loads shown on the plans
B. The proposed jacking forces
C. The dead loads and live loads due to the Contractor's equipment and operations

Approval by the Engineer of the bridge move working drawings or bridge move inspection performed by the Engineer will in no way relieve the Contractor of full responsibility for moving bridge.

The Contractor's registered engineer shall be present at the bridge site at all times when jacking operations or adjustments are in progress. Should an unplanned event occur, the Contractor's registered engineer shall submit immediately to the Engineer for approval, the procedure or proposed operation to correct or remedy the occurrence.

The Contractor shall perform an initial survey as part of the displacement monitoring system to record the location of the superstructure soffit and deck at control points prior to commencement of moving operations. Two copies of the survey shall be signed by an engineer, who is registered as a Civil Engineer in the State of California, and submitted to the Engineer.

MOVING OPERATIONS

Jacking and moving operations shall be carefully controlled and monitored to ensure that the jacking loads are applied simultaneously to prevent distortion and excessive stresses that would damage the structure.

A redundant system of supports shall be provided during the entire jacking and moving operations for backup should any of the jacks fail. The redundant system shall include stacks of steel plates added as necessary to maintain the redundant supports at each jack location within 6 mm of the jacking sill or corbels.

Adequate means shall be employed to prevent unplanned lateral and longitudinal movement of the superstructure. The jacking and support system and the superstructure shall be stable during all phases of the operation.

Before beginning moving operations, the Contractor shall perform a survey of the top of bearing pad elevations at the top of columns. The bearing elevations shall be adjusted as necessary by adding stainless steel shim plates to match the relative elevations of the bearing points on the edge beam soffit as it rests on the falsework. Stainless steel shims shall be of the same area as the bearing pads and placed on top of the bearing pad.

The Contractor shall perform a test lift of the superstructure to verify uniform lifting at all lift points. The differential displacements between lifting points shall not exceed 5 mm during the lift and during moving operations. Vertical and horizontal displacements of the superstructure shall be monitored continuously during jacking and moving operations and shall be accurately measured and recorded. The records of vertical and horizontal displacement shall be signed by an engineer who is registered as a Civil Engineer in the State of California and available to the Engineer at the jobsite, and a copy of the record shall be delivered to the Engineer at the completion of the work.

Should unanticipated displacements, cracking or other damage occur, the operation shall be discontinued until corrective measures satisfactory to the Engineer are performed. Damage to the structure as a result of the Contractor's operations shall be repaired by the Contractor in conformance with the provisions in Section 7-1.11, "Preservation of Property," of the Standard Specifications.

Elevations at bearing points shall be monitored daily for 90 days to ensure differential displacements of 5 mm are not exceeded. Should differential displacements be exceeded, the superstructure shall be jacked and shim plates shall be used to bring the elevations within the required limits.

Manufactured Assemblies

Manufactured assemblies shall conform to the provisions in Section 51-1.06A(2), "Design Stresses, Loadings, and Deflections," of the Standard Specifications and these special provisions.

Each jack shall be equipped with either a pressure gage or a load cell for determining the jacking force. Pressure gages shall have an accurately reading dial at least 150 mm in diameter. Each jack shall be calibrated by a private laboratory approved by the Transportation Laboratory within 6 months prior to use and after each repair. Each jack and its gage shall be calibrated as a unit with the cylinder extension in the approximate position that it will be at final jacking force and shall be accompanied by a certified calibration chart. Load cells shall be calibrated and provided with an indicator by which the jacking force is determined.

When no longer needed, attachments shall be removed from the structure and concrete surfaces restored to original conditions, except where permanent alterations are shown on the plans.

When jacking assemblies are no longer needed, they shall become the property of the Contractor and shall be disposed of in conformance with the provisions in Section 7-1.13, "Disposal of Material Outside the Highway Right of Way," of the Standard Specifications.

PAYMENT

The contract lump sum price paid for move bridge shall include full compensation for furnishing all labor, materials, tools, equipment and incidentals, and for doing all the work involved in designing, constructing, maintaining, and removing the bridge moving system including surveying superstructure and columns and monitoring displacements, as shown on the plans, as specified in the Standard Specifications and these special provisions, and as directed by the Engineer.

10-1.__ REINFORCEMENT

Reinforcement shall conform to the provisions in Section 52, "Reinforcement," of the Standard Specifications and these special provisions.

The Department's mechanical splices prequalified list can be found at the following internet site:

http://www.dot.ca.gov/hq/esc/approved_products_list/

The provisions of "Welding Quality Control" of these special provisions shall not apply to resistance butt welding.

EPOXY-COATED PREFABRICATED REINFORCEMENT

Bar reinforcement to be epoxy-coated shall conform to the ASTM Designation and grade required or permitted by Section 52-1.02A, "Bar Reinforcement," of the Standard Specifications, for the location or type of structure involved. The coated bar reinforcement shall conform to the requirements in ASTM Designation: A 934/A 934M except as provided herein.

Wire reinforcement to be epoxy-coated shall conform to the ASTM Designation and grade required or permitted by Section 52-1.02D, "Reinforcing Wire," of the Standard Specifications for the location or type of structure involved. The coated wire reinforcement shall conform to the requirements for Class A, Type 2 coating of ASTM Designation: A 884/A 884M except as provided herein.

Appendices X1 and X2, "Guidelines For Job-Site Practices," of ASTM Designation: A 884/A 884M and A 934/A 934M, respectively, shall apply except as provided herein. The term "shall" shall replace the term "should" in these appendices. Section X1.2 of Appendix X1 and Section X2.2 of Appendix X2 shall not apply.

All coatings shall be purple or gray in color.

Except for field welding of butt splices, all welding of reinforcement shall be complete before epoxy coating the reinforcement.

Prior to epoxy coating, all resistance butt welds shall have the weld flash removed to produce a smooth profile free of any sharp edges that would prevent proper coating of the bar. The flash shall be removed such that the ultimate tensile strength and elongation properties of the bar are not reduced, and the outside radius of the flash, at any point along the circumference of the bar, is 1) not less than the nominal radius of the bar, nor 2) greater than 5 mm beyond the nominal radius of the bar.

A proposed weld flash removal process shall be submitted to and approved by the Engineer in writing prior to performing any removal work. The submittal shall demonstrate that the proposed flash removal process produces a smooth profile that can be successfully epoxy-coated in conformance with the requirements specified herein.

Bending of epoxy-coated reinforcement after the coating has been applied will not be allowed.

When any portion of a reinforcing bar or wire requires epoxy coating, the entire bar or wire shall be coated, except, when the bar or wire is spliced outside of the limits of epoxy coating shown on the plans, epoxy coating will not be required on the portion of bar or wire beyond the splice.

Within areas where epoxy-coated reinforcement is required, tie wire and bar chairs or other metallic devices used to secure or support the reinforcement shall be plastic-coated or epoxy-coated to prevent corrosion of the devices or damage to the coated reinforcement.

Prior to coating, the Contractor shall furnish to the Transportation Laboratory a representative 110 g sample from each batch of epoxy coating material to be used. Each sample shall be packaged in an airtight container identified with the manufacturer's name and batch number.

Two 700-mm long samples of coated bar or wire reinforcement from each size and from each load shipped to the jobsite shall be furnished to the Engineer for testing. These samples shall be representative of the material furnished. These samples, as well as any additional random samples taken by the Engineer, may be tested for specification compliance. Additional sampling, and all tests performed by the Engineer, may be performed at any location deemed appropriate by the Engineer. Failure of any sample to meet the requirements of the specifications will be cause for rejection.

If any bar tested for coating thickness or for adhesion of coating fails to meet the requirements for coated bars in Section 9 of ASTM Designation: A 934/A 934M, 2 retests on

CONTRACT NO. 03-0C4404
CONTRACT CHANGE ORDER NO 72
SHEET 36 OF 41

random samples taken from bars represented by the failed test will be conducted for each failed test. If the results of both retests meet the specified requirements, the coated bars represented by the samples may be certified as meeting the test requirements.

If any wire reinforcement tested for coating thickness or for flexibility fails to meet the requirements for coated wire in Section 8 of ASTM Designation: A 884/A 884M, 2 retests on random samples taken from wire represented by the failed test will be conducted for each failed test. If the results of both retests meet the specified requirements, the coated wire represented by the samples may be certified as meeting the test requirements.

Epoxy-coated reinforcement shall be covered with an opaque polyethylene sheeting or other suitable protective material to protect the reinforcement from exposure to sunlight, salt spray, and weather. For stacked bundles, the protective covering shall be draped around the perimeter of the stack. The covering shall be adequately secured; however, it should allow for air circulation around the reinforcement to prevent condensation under the covering. Epoxy-coated reinforcement shall not be stored within 300 m of ocean or tidal water for more than 2 months.

All visible damage to coatings caused by shipping, handling, or installation shall be repaired as required for repairing coating damaged prior to shipment conforming to the requirements in ASTM Designation: A 934/A 934M for bar reinforcement or ASTM Designation: A 884/A 884M for wire reinforcement. When the extent of coating damage prior to repair exceeds 2 percent of the bar or wire surface area in any 300-mm length, repair of the bar or wire will not be allowed, and the coated bar or wire will be rejected.

The patching material and process shall be suitable for field application. The patching material shall be prequalified as required for the coating material and shall be either identified on the container as a material compatible with the reinforcement coating, or shall be accompanied by a Certificate of Compliance certifying that the material is compatible with the reinforcement coating. Damaged areas shall be patched in conformance with the patching material manufacturer's recommendations.

With the exception of lap splices, all epoxy-coated reinforcement splices shall be coated with a corrosion protection covering included on the Department's list of approved products available from the Transportation Laboratory. The covering shall be installed in conformance with the manufacturer's recommendations and as directed by the Engineer.

A Certificate of Compliance conforming to the provisions in Section 6-1.07, "Certificates of Compliance," of the Standard Specifications, shall be furnished for each shipment of epoxy-coated bar or wire reinforcement certifying that the coated bars or wire conform to the requirements in ASTM Designation: A 934/A 934M for bars or A 884/A 884M for wire and Section 52-1.02B, "Epoxy-coated Reinforcement," of the Standard Specifications. This Certificate of Compliance shall include all the certifications specified in ASTM Designation: A 934/A 934M for bars or ASTM Designation: A 884/A 884M for wire. All qualification testing and certification shall be by an independent laboratory. The Department maintains a list of prequalified epoxy coatings. The prequalified list can be obtained by contacting the Transportation Laboratory and is available at:

http://www.dot.ca.gov/hq/esc/approved_products_list/

Any portion of bar or wire reinforcement extending beyond the limits for epoxy-coated reinforcement shown on the plans will be measured and paid for as bar reinforcing steel (bridge).

10-1.__ MISCELLANEOUS METAL (BRIDGE)

Miscellaneous metal (bridge) shall conform to the provisions for miscellaneous bridge metal in Section 75, "Miscellaneous Metal," of the Standard Specifications and these special provisions.

Attention is directed to "Welding" of these special provisions.

Miscellaneous metal (bridge) shall consist of the miscellaneous bridge metal items listed in Section 75-1.03, "Miscellaneous Bridge Metal," of the Standard Specifications, and the following:

A. xx-strong pipe for column pipe keys
B. Steel spreader plates

Steel shapes, plates, and other metal parts designated in the plans as stainless steel shall conform to the requirements of ASTM Designation: A 276, Type 316.

Full compensation for filling xx-strong pipes as shown on the plans with concrete shall be considered as included in the contract price paid per kilogram for miscellaneous metal, bridge and no separate payment will be allowed therefor.

10-1.__ BRIDGE DECK DRAINAGE SYSTEM

This work shall consist of furnishing and installing bridge deck drainage system as shown on the plans, in conformance to the provisions in Section 75, "Miscellaneous Metal," of the Standard Specifications and these special provisions.

Attention is directed to "Welding" of these special provisions.

Self-tapping screws used for sleeve connections shall be hex-head stainless steel, installed in holes drilled to fit the self-tapping screws, conforming to the requirements of ASTM Designation: A 276, Type 316.

At the Contractor's option, fiberglass pipes and fittings with the same diameter and minimum bend radius as those shown on the plans, may be substituted for welded steel pipe in deck drain systems.

Fiberglass pipe and fittings shall conform to the requirements in ASTM Designation: D 2996, and shall have a minimum short-term rupture strength of 207 MPa. The adhesive type recommended by the manufacturer shall be used for joining pipe and fittings. Fiberglass pipe not enclosed in a box girder cell or encased in concrete shall be manufactured from ultraviolet-resistant resin pigmented with concrete-gray color, or be coated with a concrete-gray resin-rich exterior coating. Paint shall not be used. Fiberglass pipe treated with ultraviolet protection shall withstand a minimum of 2500 hours of accelerated weathering when tested in conformance with the requirements in ASTM Designation: G 154. Lamps shall be UV-B (313 nm wavelength). The resting cycle shall be 4 hours of ultraviolet (UV) exposure at 60°C, and then 4 hour of condensate exposure at 50°C. After testing, the surface of the pipe shall exhibit no fiber exposure, crazing, or checking, and only a slight chalking or color change.

Support spacing for fiberglass pipe shall be the same as shown on the plans for welded steel pipe. Pipe supports shall have a width of not less than 38 mm.

A Certificate of Compliance for fiberglass pipe and fittings shall be furnished to the Engineer in conformance with the provisions in Section 6-1.07, "Certificates of Compliance," of the Standard Specifications. The Certificate of Compliance shall include all laboratory test results conforming to the provisions specified herein.

CONTRACT NO. 64-012284
CONTRACT CHANGE ORDER NO 72
SHEET 38 OF 41

Couplings used to connect fiberglass pipe to steel shall be threaded or flanged. The sleeve connections shown on the plans shall not be used for fiberglass pipe.

If fiberglass pipe is substituted for welded steel pipe, the quantity of drainage piping will be computed on the basis of the dimensions and details shown on the plans, and no change in the quantities to be paid for will be made because of the use of fiberglass pipe.

Cast-in-place inserts shall be the ferrule loop type.

Metal parts of concrete anchorage devices shall be fabricated from stainless steel conforming to the requirements of ASTM Designation: A 276, Type 316.

MEASUREMENT AND PAYMENT

Bridge deck drainage system will be measured and paid for as lump sum.

The contract lump sum price paid for bridge deck drainage system shall include full compensation for furnishing all labor, materials, tools, equipment and incidentals, and for doing all the work involved in furnishing and installing bridge deck drainage system, complete in place, as shown on the plans, as specified in the Standard Specifications and these special provisions, and as directed by the Engineer.

10-1.__ CONCRETE BARRIER

Concrete barriers shall conform to the provisions in Section 83-2, "Barriers," of the Standard Specifications and these special provisions.

Bar reinforcing steel for use in concrete barriers shall conform to the provisions in "Epoxy-Coated Prefabricated Reinforcement," of these special provisions.

Full compensation for epoxy-coated bar reinforcement shall be considered as included in the contract price paid per meter for concrete barrier of the type or types listed in the Engineer's Estimate and no separate payment will be made therefor.

M J Cullen 6-5-07
REGISTERED CIVIL ENGINEER DATE

PLANS APPROVAL DATE

REGISTERED PROFESSIONAL ENGINEER — M. J. CULLEN — No. C 40620 — Exp. 03-31-09 — CIVIL — STATE OF CALIFORNIA

The State of California or its officers or agents shall not be responsible for the accuracy or completeness of electronic copies of this plan sheet.

Caltrans now has a web site! To get to the web site, go to: http://www.dot.ca.gov

MARK	DATE	REVISION(S) DESCRIPTIONS	DES	CHK	DET
8	5-30-07	Blockout,PS sheathing,Hanger bar	MC	GS	GS
7	5-21-07	Modify main reinf & PS sheathing	MC	GS	GS
6	4-26-07	Prestress sheathing relocated	MC	GS	GS
5	4-24-07	Hanger bar size and shape	MC	GS	GS
4	4-20-07	Top slab flare at edge beam	MC	GS	GS
3	4-20-07	Modify edge beam reinf details	MC	GS	GS
2	4-20-07	Main reinf number & spacing	MC	GS	GS
1	4-20-07	Reviesed note	MC	GS	GS

REGISTERED CIVIL ENGINEER: M J Cullen DATE: 6-5-07

REGISTERED PROFESSIONAL ENGINEER — M. J. Cullen — No. C 40620 — Exp. 03-31-07 — CIVIL — STATE OF CALIFORNIA

* CONTRACT CHANGE ORDER NO. 72
SHEET 40 OF 41

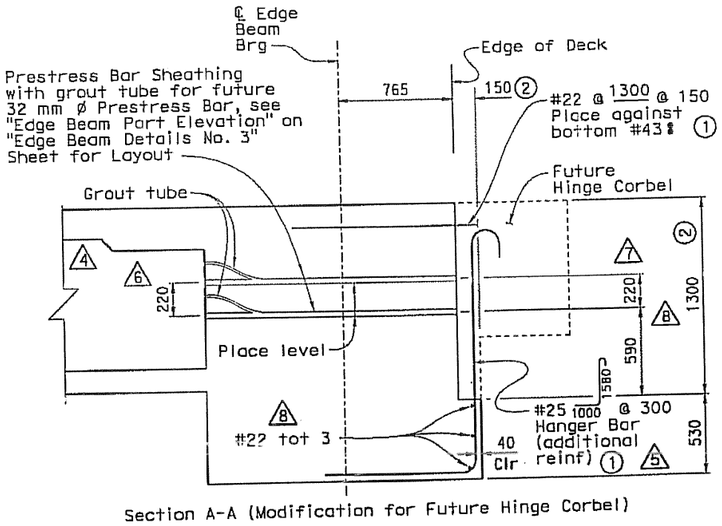

Section A-A (Modification for Future Hinge Corbel)

(1) Reinforcement shown in Section A-A is additional reinforcement required for the Future Hinge Corbel. For remaining reinforcement and dimensions see "Section E-E", for prestress details see "Edge Beam Details No. 3" sheet.

(2) Prestress blockout shall be left open. Prestress anchorage shall be capped and grouted to prevent corrosion.

SECTION A-A
1:20

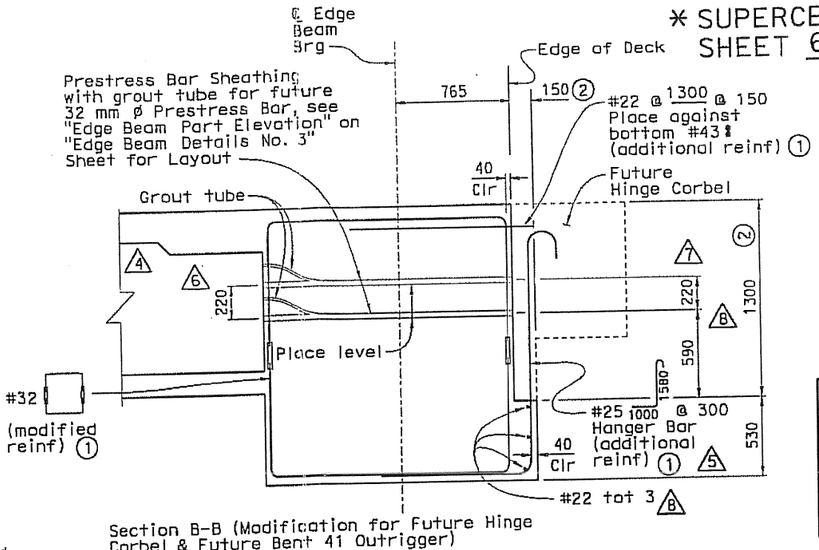

Section B-B (Modification for Future Hinge Corbel & Future Bent 41 Outrigger)

(1) Reinforcement shown in Section B-B is modified or additional reinforcement required for the Future Hinge Corbel & Future Bent 41 Outrigger. For remaining reinforcement and dimensions see "Section E-E", for prestress details see "Edge Beam Details No. 3" sheet.

(2) Prestress Blockout shall be left open. Prestress anchorage shall be capped and grouted to prevent corrosion.

SECTION B-B
1:20

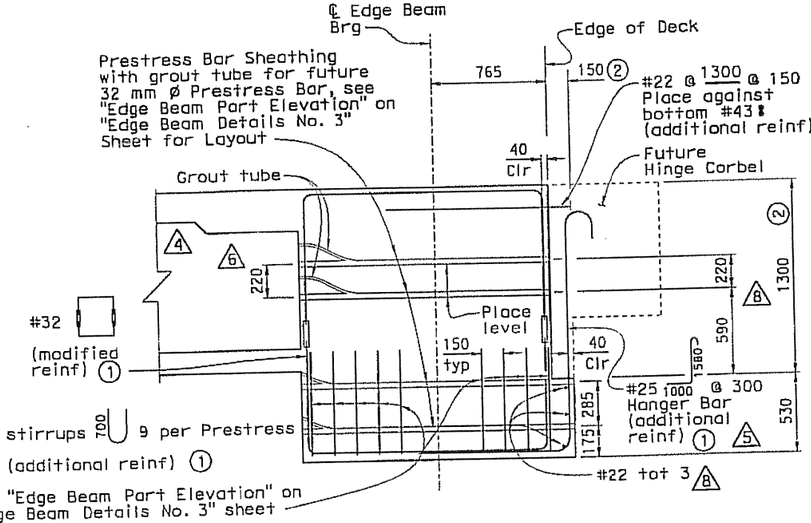

Section C-C (Modification for Future Hinge Corbel & Future Bent 41 Outrigger).

(1) Reinforcement shown in Section C-C is modified or additional reinforcement required for the Future Hinge Corbel & Future Bent 41 Outrigger. For remaining reinforcement and dimensions see "Section E-E", for prestress details see "Edge Beam Details No. 3" sheet.

(2) Prestress Blockout shall be left open. Prestress Anchorage shall be capped and grouted to prevent corrosion.

SECTION C-C
1:20

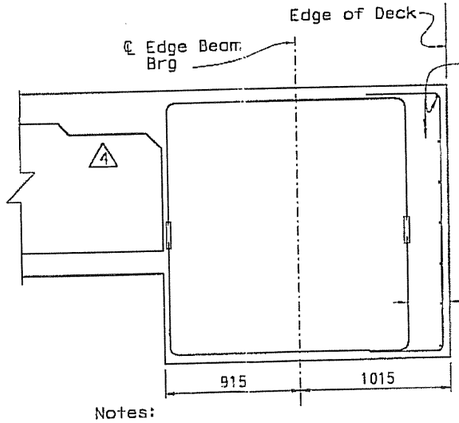

Notes:

Section D-D applies to Bent 41N, Bent 42N, Bents 43N and Bents 44NS.

At B43S section A-A applies to Edge Beam west of ℄ Bent 43 and section D-D applies to Edge Beam east of ℄ Bent 43.

For reinforcement and dimensions not shown see "Section E-E" for Prestressing Details see "Edge Beam details No. 3" Sheet.

South Edge Beam shown, North Edge Beam similar but opposite hand.

SECTION D-D
1:20

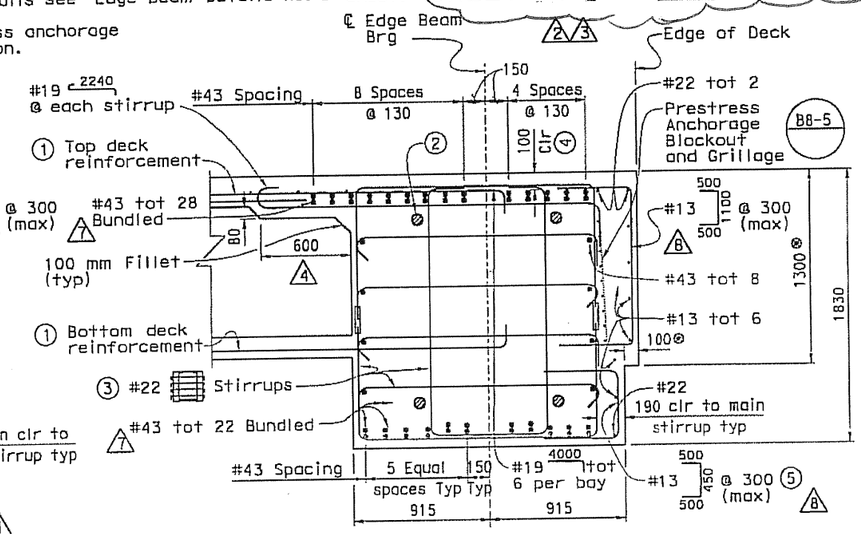

(1) Upper Top Deck Transverse Reinforcement, and all Bottom Deck Transverse Reinforcement shall be extended into Edge Beam 1000 mm.

(2) Edge Beam Prestress Tendons total 4, see "Edge Beam Details No. 3" sheet.

(3) Outer Stirrup shall be a mechanically coupled closed stirrup. Mechanical coupler shall adhere to the service splice criteria. Contractor may alter the location of the splice.

(4) Clearance to #43 top main reinforcement.

(5) Do not place this bar in Sections A-A, B-B, C-C and D-D

⊛ Place this concrete in conjunction with the prestress blockout closure pour.

SECTION E-E
1:20

Contract No. 04-0120R4

DESIGN	BY G. Schuster	CHECKED M. J. Cullen	
DETAILS	BY G. Souza/T. Cotton	CHECKED G. Schuster	
QUANTITIES	BY J. Holman	CHECKED H. Fong	

STATE OF CALIFORNIA
DEPARTMENT OF TRANSPORTATION

DIVISION OF ENGINEERING SERVICES
STRUCTURE DESIGN
DESIGN BRANCH 5

CU 04251
EA 0120R1

BRIDGE NO. 34-0006
KILOMETER POST NA

WEST TIE-IN PHASE 1
YBI VIADUCT REPLACEMENT
EDGE BEAM DETAILS NO. 2

Caltrans Metric

REVISED
5-30-07

ALL DIMENSIONS ARE IN MILLIMETERS UNLESS OTHERWISE SHOWN

ORIGINAL SCALE IN MILLIMETERS FOR REDUCED PLANS 0 10 20 30 40 50 60 70 80 90 100

DISREGARD PRINTS BEARING EARLIER REVISION DATES

REVISION DATES: 5-21-07 | 5-25-07 | 5-30-07

SHEET 17R5 OF 33

FILE => 34-0006-k-edge_beam02-r5.dgn

STRUCTURES DESIGN DETAIL SHEET (METRIC) (REV.03-17-04)

DATE PLOTTED => 05-JUN-2007 TIME PLOTTED => 14:04
USERNAME => GSOUZA

DIST	COUNTY	ROUTE	TOTAL PROJECT	No	SHEETS
04	SF	80	12.6/13.2		

M J Cullen 6-5-07
REGISTERED CIVIL ENGINEER DATE

PLANS APPROVAL DATE

The State of California or its officers or agents shall not be responsible for the accuracy or completeness of electronic copies of this plan sheet.

REGISTERED PROFESSIONAL ENGINEER — N. J. CULLEN — No. C 40620 — Exp. 03-31-09 — CIVIL — STATE OF CALIFORNIA

Caltrans now has a web site! To get to the web site, go to: http://www.dot.ca.gov

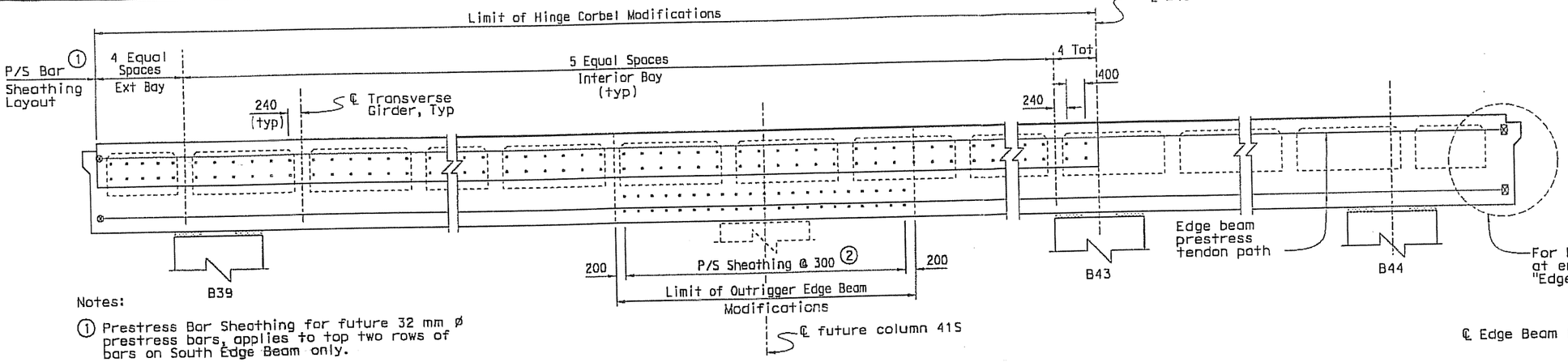

Notes:

① Prestress Bar Sheathing for future 32 mm ø prestress bars, applies to top two rows of bars on South Edge Beam only.

② Prestress Bar Sheathing for future 32 mm ø prestress bars, applies to bottom two rows of bars on South Edge Beam only.

South Edge Beam shown, North Edge Beam similar but opposite hand.
North Edge Beam has no future hinge corbel or outrigger edge beam modifications.

MARK	DATE	REVISION(S) DESCRIPTIONS	DES	CHK	DET
3	5-04-07	Bar added for future widening	MC	GS	GS
2	4-20-07	Top slab flare at edge beam	MC	GS	GS
1	4-20-07	PJack change	MC	GS	GS

REGISTERED CIVIL ENGINEER: M J Cullen DATE: 6-5-07

REGISTERED PROFESSIONAL ENGINEER — M. J. Cullen — No. C 40620 — Exp. 03-31-07 — CIVIL — STATE OF CALIFORNIA

CONTRACT CHANGE ORDER NO. 72
SHEET 41 OF 41

EDGE BEAM PART ELEVATION
1:50

SUPERCEDES CCO NO. 61
SHEET 6 OF 12

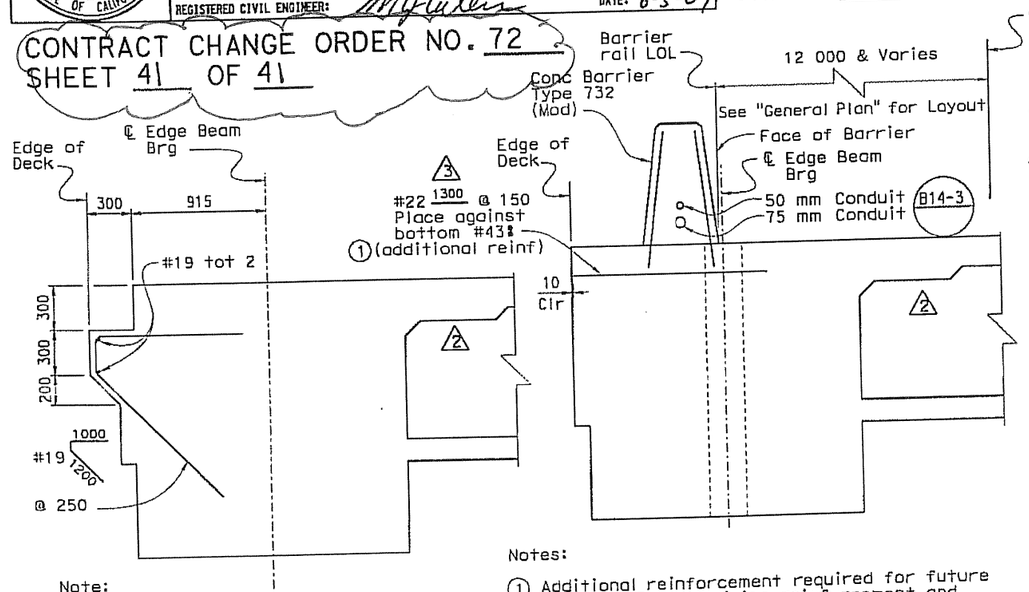

Note:

For remaining edge beam reinforcement and dimensions see "Section E-E"
For Prestressing details see "Edge Beam Prestress Layout"

Notes:

① Additional reinforcement required for future widening. For remaining reinforcement and dimensions see "Section E-E" on "Edge Beam Details No. 2" sheet. For Prestressing details see "Edge Beam Prestress Layout" on this sheet

Keep barrier clear of formed hole @ column pin locations

SECTION F-F
1:20

SECTION G-G
1:20

EDGE BEAM PRESTRESSING NOTES
B8-5

1860 MPa Low Relaxation Strands:

TENDON	As/TENDON	P_{Jack}/TENDON
① N, ① S	2660 mm²	2475 kN
② N, ② S	2660 mm²	2475 kN
③ N, ③ S	2660 mm²	2475 kN
④ N, ④ S	2660 mm²	2475 kN

Total P_{Jack} North Edge Beam = 9900 kN

Total P_{Jack} South Edge Beam = 9900 kN

Concrete: f'_c = 42 MPa @ 28 days

f'_{ci} = 24 MPa @ at Time of Stressing

For each Prestress Tendon, Contractor shall submit Elongation based on Initial Stress at

1.00 times Jacking Stress

⊠ = Indicates Jacking End

⊗ = Indicates Theoretical point of no Movement

Complete Edge Beam Prestressing prior to Transverse Girder Prestressing

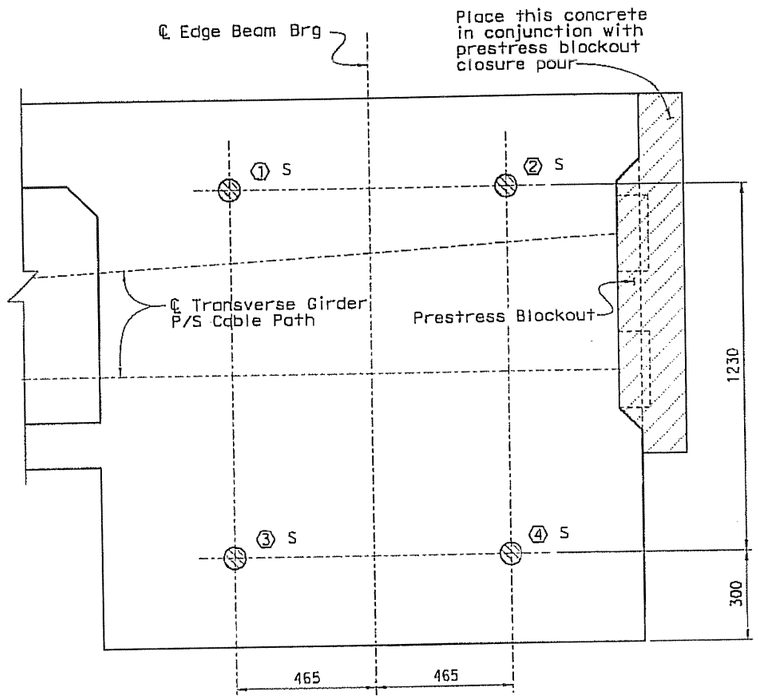

EDGE BEAM PRESTRESS LAYOUT
1:10

Note:

Section B-B shown, P/S layout similar for all other sections see "Edge Beam Details No. 2" sheet

① Indicates Prestress Tendon

P/S Blockout

N - North Edge Girder

S - South Edge Girder

Contract No 04-0120R1

DESIGN	BY G. Schuster	CHECKED M. J. Cullen
DETAILS	BY G. Souza/T. Cotton/A. Chen	CHECKED M. J. Cullen
QUANTITIES	BY J. Holman	CHECKED H. Fang

REVISED 5-04-07

ALL DIMENSIONS ARE IN MILLIMETERS UNLESS OTHERWISE SHOWN

ORIGINAL SCALE IN MILLIMETERS FOR REDUCED PLANS 0 10 20 30 40 50 60 70 80 90 100

STATE OF CALIFORNIA
DEPARTMENT OF TRANSPORTATION
DIVISION OF ENGINEERING SERVICES
STRUCTURE DESIGN
DESIGN BRANCH 5

CU 04251
EA 0120R1

FILE => 34-0006-k-edge_beam03-r3.dgn

BRIDGE NO. 34-0006
KILOMETER POST NA

WEST TIE-IN PHASE 1
YBI VIADUCT REPLACEMENT
EDGE BEAM DETAILS NO. 3

DISREGARD PRINTS BEARING EARLIER REVISION DATES

REVISION DATES: 5-01-07

SHEET 18R3 OF 33

STRUCTURES DESIGN DETAIL SHEET (METRIC) (REV.03-17-04)

USERNAME => dsouzo DATE PLOTTED => 05-JUN-2007 TIME PLOTTED => 14:03

STATE OF CALIFORNIA - DEPARTMENT OF TRANSPORTATION

RECEIVED

CONTRACT CHANGE ORDER MEMORANDUM

DATE: 6/1/2007

TO: MIKE FORNER / DENNIS TURCHON	FILE: E.A. 04 - 0120R4 006286 AUG -8 5
	CO-RTE-PM SF-80-12.6/13.2
FROM: MAHANTESH ANIGOL	FED. NO. ACBRIM-080-1(097)N
CCO# 72 SUPPLEMENT#: 0 Category Code: CHPA	CONTINGENCY BALANCE (incl. this change) $28,770,020.65
COST: $11,096,900.00 INCREASE ☑ DECREASE ☐	HEADQUARTERS APPROVAL REQUIRED? ☑ YES ☐ NO
SUPPLEMENTAL FUNDS PROVIDED: $0.00	IS THIS REQUEST IN ACCORDANCE WITH ENVIRONMENTAL DOCUMENTS? ☑ YES ☐ NO
CCO DESCRIPTION: WTI - Phase 1 Superstruc & Shuttle	**PROJECT DESCRIPTION:** CONSTRUCT ROUTE 80 TEMP BYPASS STRUCTURE

Original Contract Time:	Time Adj. This Change:	Previously Approved CCO Time Adjustments:	Percentage Time Adjusted: (including this change)	Total # of Unreconciled Deferred Time CCO(s): (including this change)
475 Day(s)	DEF Day(s)	381 Day(s)	80 %	8

THIS CHANGE ORDER PROVIDES FOR:

Construction of the Superstructure Section for the YBI Viaduct Replacement Structure, Bridge No. 34-0006, South-South Detour (SSD) West Tie-In (Phase 1) and provide temporary shuttle van service for transporting general public and passengers on Yerba Buena Island.

Under the scope of the original Contract, the Contractor was to design and construct three defined sections of the Temporary Bypass Structure (TBS), the West Tie-In, the Viaduct, and the East Tie-In. In accordance with the Department's strategy memorandum (San Francisco-Oakland Bay Bridge Corridor Schedule Mitigation – Strategy for South-South Detour Contract Completion, dated December 14, 2006) and the TBPOC approval (Meeting Minutes dated may 31, 2006) the Department assumed responsibility for the design of the West Tie-In (Contract Change Order No. 52 executed this direction) and divided the work into two phases. Phase 1 work will seismically retrofit the upper deck section of the existing YBI Viaduct by replacement and provide for modifications to the YBI Viaduct Structure to accommodate the Phase 2 work. The Phase 2 work will connect I-80 at the West Tie-In to the SSD TBS Viaduct Structure. This transition provides for the traffic detour necessary for the future work of realigning the existing YBI Transition Structure to the new SFOBB East Spans alignment.

Previously, CCO No. 61 Supplements 0 and 1 were issued for portions of the WTI Phase I work. Supplement 0, issued at force account ($400,000.00), provided compensation to the contractor for early procurement of materials, to perform site work, and prepare submittals. Supplement 1, issued at agreed lump sum ($9,995,644.00), compensated the contractor for Stage I demolition work, construction of retaining walls and roadway excavation for the Phase 1 staging area, construction of the pile foundations and columns to support the YBI Viaduct replacement, utility tunnel abandonment work, traffic control and clearing and grubbing. Supplement 0 will continue to remain in place to continue to provide compensation to the Contractor for ongoing work preparations.

Other change orders will be issued for the remaining Phase 1 work and Phase 2 work not included in this change order or CCO No. 61 Supplements 0 and 1. As follows:

1) CCO No. 61-S1 Package 3, West Tie-In Phase I YBI Viaduct Replacement: Stage II Demolition work, and work to move the YBI Viaduct Superstructure complete into place shall be compensated for under separate change order.
2) Compensation for all additional SWPPP work associated with this change shall be compensated for separately.
3) Time related costs and impacts as a result of this change shall be compensated for under separate change order.
4) TRO compensation and time adjustments.

Payment for this work will be at Extra Work at Agreed Lump Sum Price of $10,596,900.00. The total cost of this change will be $11,096,900.00, including $500,000.00 in extra work at force account, which can be financed from the contingency fund.

Supporting documents and information for this change including a cost analysis are on file with the project records.

ADA Notice: For individuals with sensory disabilities, this document is available in alternate formats. For information call: (916) 654-6410 or TDD (916) 654-3880 or wr
Records and Forms Management, 1120 N Street, MS-89, Sacramento, CA 95814.

This change order is in accordance with the approved document, dated 12/14/2006, titled "San Francisco-Oakland Bay Bridge Corridor Schedule Mitigation – Strategy for South-South Detour Contract Completion". TBPOC provided authorization to proceed with this change order per their meeting on May 31, 2006.

Additionally, this change order compensates the Contractor for providing temporary shuttle van service for transporting the general public and passengers on Yerba Buena Island (YBI) during Phase 1 construction of the superstructure section, which includes closing the west-bound I-80 on-ramp until the end of 2007. The closing of the WB on-ramp will re-route traffic and impact San Francisco MUNI's ability to provide bus service to the general public and U.S. Coast Guard on Yerba Buena Island. As such, shuttle service will be provided to transport the general public and USCG personnel to an alternate MUNI pick-up / drop-off site for the duration of the closure. This is added work and is a part of Phase 1 of the advance West Tie-In work. Payment for this additional work will be at Extra Work at Force Account for an estimated cost of $500,000.00, which can be financed from the contingency fund.

This change was requested by Mike Whiteside, YBI Coordination Engineer, per a memorandum dated 3/28/2007 and by Alec Melkonians - Project Manager, per a memorandum dated 2/15/2007. This change was discussed and concurred by Tom Ostrom - Office Chief, Structures Design, Ken Brown - Office Chief, Structures Maintenance, and Hong Wong - Project Engineer.

Any time adjustments relating to this work will be deferred as it may impact the controlling operation.

Approval of this change order is recommended by the Resident Engineer.

CONCURRED BY:			
Construction Engineer:	Mahantesh Anigol	Date	7/18/07
Bridge Engineer:	Bill Casey, Structure Representativ	Date	7/16/07
Project Engineer:	Hong Wong	Date	7/18/07
Project Manager:		Date	
FHWA Rep.:		Date	
Environmental:		Date	
Other (specify):	Robert Kobal, HQ Asst. Const. Coo	Date	7/19/07
Other (specify):		Date	
District Prior Approval By:		Date	
HQ (Issue Approve) By:	Ken Darby, HQ CCO Review	Date	7/19/07
Resident Engineer's Signature:		Date	
M. U. Anigol		7/18/07	

ESTIMATE OF COST		
	THIS REQUEST	TOTAL TO DATE
ITEMS	$0.00	$0.00
FORCE ACCOUNT	$500,000.00	$500,000.00
AGREED PRICE	$10,596,900.00	$10,596,900.00
ADJUSTMENT	$0.00	$0.00
TOTAL	$11,096,900.00	$11,096,900.00

FEDERAL PARTICIPATION

☐ PARTICIPATING ☐ PARTICIPATING IN PART ☑ NONE
☐ NON-PARTICIPATING (MAINTENANCE) ☐ NON-PARTICIPATING

FEDERAL SEGREGATION (if more than one Funding Source or P.I.P. type)
☑ CCO FUNDED PER CONTRACT ☐ CCO FUNDED AS FOLLOWS

FEDERAL FUNDING SOURCE	PERCENT

ADA Notice: For individuals with sensory disabilities, this document is available in alternate formats. For information call: (916) 654-6410 or TDD (916) 654-3880 or write Records and Forms Management, 1120 N Street, MS-89, Sacramento, CA 95814.

CONTRACT CHANGE ORDER

Change Requested by: Engineer

CCO 73	Suppl. No. 0	Contract No. 04 - 0120R4	Road SF-80-12.6/13.2	FED. AID LOC.: ACBRIM-080-1(097)N

To: **CC MYERS INC**

You are directed to make the following changes from the plans and specifications or do the following described work not included in the plans and specifications for this contract. ***NOTE: This change order is not effective until approved by the Engineer.***

Description of work to be done, estimate of quantities and prices to be paid. (Segregate between additional work at contract price, agreed price and force account.) Unless otherwise stated, rates for rental of equipment cover only such time as equipment is actually used and no allowance will be made for idle time. This last percentage shown is the net accumulated increase or decrease from the original quantity in the Engineer's Estimate.

Extra Work at Lump Sum:

Perform the following work as described under Items No. 1 through 10 below in accordance with the plans and specifications shown on Sheets No. 3 through 280 of this change order:

1) Complete the construction of the portion of the Bent W3L column of the YBI Transition Structure (Br. No. 34-0006 L) tha was excluded from Change order No. 64, Supplement No. 1.

2) Construct the footings and columns for Bent W3R, Bent W4R, Bent W6L and Bent W6R of the YBI Transition Structure (Br. No. 34-0006 L/R).

3) Construct the footing and column for Bent W7 of the YBI EB On-Ramp Structure (Br. No. 34-0006 R).

4) Construct the footings and columns for Bent W5L and Bent W5R of the YBI Transition Structure (Br. No. 34-0006 L/R).

5) Construct Drainage Systems No. 1, No. 5, No. 6 No. 7 and No. 8.

6) Construct the electrical duct bank and compressed air line including all appurtenances.

7) Furnish and install all temporary signing and traffic handling measures as specified.

8) Perform all electrical work specified.

9) Reconstruct the M2 Line roadway as specified.

10) Perform all other work designated on the plans and specifications to be performed on this change order.

For the work concerning Items No. 1 through 10 above, the Contractor shall be compensated a lump sum of $62,958,990.00. This sum constitutes full and final compensation, including all markups, for all costs associated with the work of this change except for the 4 items of work specifically excluded below:

1) All work associated with the implementation and maintenance of the Contractor's Storm Water Pollution Prevention Plan and erosion control, excluding concrete washouts, shall be paid by the Department separately from this change order.

2) Flagging costs associated with this work shall be paid under Change Order No. 1 with these costs being paid at 50% by the Department. The remaining flagging costs are considered to be included in the lump sum payments made under this change order.

3) Any time related overhead costs resulting from this change order shall be addressed separately as they pertain to the adjustment of Contract Bid Item No. 8 "Time Related Overhead".

4) All work associated with integrated shop drawings, the placement of 150 mm cast iron pipe and the performance of any sewer video survey shall be compensated separately from this change order.

CONTRACT CHANGE ORDER

Change Requested by: Engineer

CCO 73	Suppl. No. 0	Contract No. 04 - 0120R4	Road SF-80-12.6/13.2	FED. AID LOC.: ACBRIM-080-1(097)N

It is understood as part of this change order that the Department may elect to remove the work concerning the construction of Bent W5L and Bent W5R (Item No. 4 of 10 above) that cannot be performed prior to the removal of Pier YB-3 of the existing structure. In the event this work is eliminated, the Contractor shall credit the Department a lump sum of $5,367,650. This lump sum credit is contingent upon all Bent W5L and W5R steel HP 360X196 piles being furnished and driven. In the event these piles, or a portion of these piles, are not furnished or driven, an additional credit shall be provided to the Department commensurate to the value of the work not performed.

In the event the work concerning the construction of Bent W5L and Bent W5R is eliminated, any credit owed to the Department shall be taken through a supplemental change order.

The plans and specification of this change order incorrectly make reference to or list themselves as Change Order No 64. These references should be interpreted to be part of this change order.

Any payment clauses contained within the specifications of this change order are superseded by the payment clauses concerning the agreed lump sum payment noted above.

All work shall be performed in accordance with the contract documents.

Estimated Cost: Increase ☑ Decrease ☐ **$62,958,990.00**

By reason of this order the time of completion will be adjusted as follows: Deferred

Submitted by

Signature	Resident Engineer BILL CASEY	Date 10/23/07

Approval Recommended by

Signature	SFOBB Construction Manager MIKE FORNER	Date 10/23/07

Engineer Approval by

Signature	SFOBB Construction Manager MIKE FORNER	Date 11/19/07

We the undersigned contractor, have given careful consideration to the change proposed and agree, if this proposal is approved, that we will provide all equipment, furnish the materials, except as may otherwise be noted above, and perform all services necessary for the work above specified, and will accept as full payment therefor the prices shown above.

NOTE: If you, the contractor, do not sign acceptance of this order, your attention is directed to the requirements of the specifications as to proceeding with the ordered work and filing a written protest within the time therein specified.

Contractor Acceptance by

Signature	(Print name and title) DANIEL E. HIMICK, PRESIDENT	Date 11/07/07

Contract No. 04-0120R4

04-SF-80 (KP 12.6/13.2)

SPECIAL PROVISIONS
for
CONTRACT CHANGE ORDER No. 73

Date 11-28-06

CONTRACT NO. 04-0120R4

CONTRACT CHANGE ORDER NO 73

SHEET 3 OF 280

Contract No. 04-0120R4

04-SF-80 (KP 12.6/13.2)

SPECIAL PROVISIONS
for
CONTRACT CHANGE ORDER No. 73

Date 11-28-06

CONTRACT NO. 04-0120R4

CONTRACT CHANGE ORDER NO 73

SHEET 4 OF 280

CONTRACT NO. 04-0120R4
(Contract Change Order No. 64)

The special provisions contained herein have been prepared by or under the direction of the following Registered Persons.

STRUCTURES

REGISTERED CIVIL ENGINEER

REGISTERED PROFESSIONAL ENGINEER
Jal N. Birdy
No. 41547
Exp. 12-31-07
CIVIL
STATE OF CALIFORNIA

CONTRACT NO. 04-0120R4

CONTRACT CHANGE ORDER NO 73

SHEET 5 OF 260

CONTRACT NO. 04-0120R4
(Contract Change Order No. 64)

The special provisions contained herein have been prepared by or under the direction of the following Registered Persons.

HIGHWAYS

Heng K. Tay 11-28-06

REGISTERED CIVIL ENGINEER

CONTRACT NO. 04-0120R4

CONTRACT CHANGE ORDER NO 73

SHEET 10 OF 250

CONTRACT NO. 04-0120R4
(Contract Change Order No. 64)

The special provisions contained herein have been prepared by or under the direction of the following Registered Persons.

ENVIRONMENTAL ENGINEERING

Charles D. Smith

REGISTERED CIVIL ENGINEER

CONTRACT NO. 04-0120R4

CONTRACT CHANGE ORDER NO 73

SHEET 7 OF 280

CONTRACT NO. 04-0120R4
(Contract Change Order No. 64)

The special provisions contained herein have been prepared by or under the direction of the following Registered Person.

WATER POLLUTION CONTROL

REGISTERED CIVIL ENGINEER

REGISTERED PROFESSIONAL ENGINEER
Faramarz Farahani
No. C 45671
Exp 12/31/08
CIVIL
STATE OF CALIFORNIA

CONTRACT NO. 04-0120R4

CONTRACT CHANGE ORDER NO 73

SHEET 8 OF 280

CONTRACT 04-0120R4
(Contract Change Order No. 64)

The special provisions contained herein have been prepared by or under the direction of the following Licensed Person.

EROSION CONTROL

Chris Padick

LICENSED LANDSCAPE ARCHITECT

CONTRACT NO. 04-0120R4

CONTRACT CHANGE ORDER NO 73

SHEET 9 OF 280

CONTRACT NO. 04-0120R4
(Contract Change Order No. 64)

The special provisions contained herein have been prepared by or under the direction of the following Registered Persons:

ELECTRICAL ENGINEERING

Jens Ericsson 1/27/06
REGISTERED ELECTRICAL ENGINEER DATE

REGISTERED PROFESSIONAL ENGINEER
JENS ERICSSON
No. 8249
EXP. 9/30/08
ELECTRICAL
STATE OF CALIFORNIA

CONTRACT NO. 04-0120R4

CONTRACT CHANGE ORDER NO 73

SHEET 10 OF 250

TABLE OF CONTENTS

SCOPE OF WORK (CCO No. 64) 4
ENGINEER'S ESTIMATE 5
5-1.01 WORKING DRAWINGS 8
5-1.02 INTEGRATED SHOP DRAWINGS 9
5-1.03 PAYMENTS 11
5-1.04 PROJECT INFORMATION 11
5-1.05 AREAS FOR CONTRACTOR'S USE 11
5-1.06 UTILITIES 13
5-1.07 SANITARY PROVISIONS 13
5-1.08 BRIDGE TOLLS 13
5-1.09 PERMITS AND LICENSES 13
5-1.10 HAZARDOUS MATERIAL, GENERAL 13
APPLICABLE RULES AND REGULATIONS 14
PERMITS AND LICENSES 15
SITE HEALTH AND SAFETY PLAN 15
SAFETY TRAINING 15
PAYMENT 15
5-1.11 ENVIRONMENTALLY SENSITIVE AREAS (GENERAL) 15
A. ENVIRONMENTALLY SENSITIVE AREAS 16
B. AREA TO BE MONITOR (ATM) 18
C. SPECIAL CONSTRUCTION AREA (SCA) 19
5-1.12 SOUND CONTROL REQUIREMENTS 19
8-1.01 SUBSTITUTION OF NON-METRIC MATERIALS AND PRODUCTS 19
8-2.02 PORTLAND CEMENT CONCRETE 27
8-2.03 CORROSION CONTROL FOR PORTLAND CEMENT CONCRETE 29
SECTION 8-3. WELDING 31
8-3.01 WELDING 31
GENERAL 31
WELDING QUALITY CONTROL 34
PAYMENT 37
SECTION 9. DESCRIPTION OF BRIDGE WORK 37
SECTION 10. CONSTRUCTION DETAILS 38
SECTION 10-1. GENERAL 38
10-1.01 ORDER OF WORK 38
10-1.02 WATER POLLUTION CONTROL 38
COST BREAK-DOWN 39
PAYMENT 41
10-1.03 NON-STORM WATER DISCHARGES 43
MARINE EXCAVATION DEWATERING 43
LAND-BASED EXCAVATION DEWATERING 44
EFFLUENT TREATMENT FACILITY 48
INSPECTION 49
SPILL CONTINGENCY 50
LIQUIDS, RESIDUES AND DEBRIS 50
PAYMENT 50

10-1.04 TEMPORARY DRAINAGE INLET PROTECTION 50
10-1.05 TEMPORARY COVER 57
10-1.06 TEMPORARY CONCRETE WASHOUT FACILITY 60
10-1.07 TEMPORARY SILT FENCE 63
10-1.08 TEMPORARY CONSTRUCTION ENTRANCE 65
10-1.09 EROSION CONTROL (NETTING) 68
MATERIALS 68
INSTALLATION 68
MAINTENANCE 69
MEASUREMENT AND PAYMENT 69
10-1.10 OBSTRUCTIONS 69
10-1.11 DUST CONTROL 71
10-1.12 CONSTRUCTION AREA SIGNS 71
10-1.13 MAINTAINING TRAFFIC 72
10-1.14 TRAFFIC CONTROL SYSTEM FOR LANE CLOSURE 73
10-1.15 EXISTING HIGHWAY FACILITIES 74
ABANDON PIPE LINE 74
REMOVE FIRE HYDRANT 74
RELOCATE FIRE HYDRANT 75
REMOVE ABADON UTILITY AND NON-HIGHWAY FACILITIES 75
REMOVE TRAFFIC STRIPE ANDPAVEMENT MARKER 75
REMOVE DRAINAGE FACILITY 75
REPLACE EXISTING PAVEMENT DELINEATION 76
10-1.16 SEWER VIDEO SURVEY 76
SEWER VIDEO SURVEY LOCATIONS 76
SAFETY PROCEDURES 77
PRE-ENTRY AND CONFINED SPACE OPERATIONS 77
ADDITIONAL REQUIREMENTS 77
PAYMENT 78
10-1.17 CLEARING AND GRUBBING 78
10-1.18 EARTHWORK 79
HAZARDOUS MATERIAL EXCAVATION 80
SAMPLING AND ANALYSIS 81
10-1.19 STRUCTURE EXCAVATION (ROCK) 82
10-1.20 MOVE-IN/MOVE-OUT (EROSION CONTROL) 83
10-1.21 EROSION CONTROL (TYPE D) 83
MATERIALS 84
APPLICATION 86
MEASUREMENT AND PAYMENT 87
10-1.22 AGGREGATE BASE 87
10-1.23 ASPHALT CONCRETE 88
10-1.24 PILING 90
GENERAL 90
CAST-IN-DRILLED-HOLE CONCRETE PILES 91
MEASUREMENT AND PAYMENT (PILING) 104
10-1.25 TIEDOWN ANCHORS 104
MATERIALS 105

CONSTRUCTION 105
MEASUREMENT AND PAYMENT 108
10-1.25 CONCRETE STRUCTURES 108
MASS CONCRETE 109
MEASUREMENT AND PAYMENT 114
10-1.26 REINFORCEMENT 114
MEASUREMENT AND PAYMENT 114
10-1.27 ROADSIDE SIGNS 114
10-1.28 FURNISH SIGN 114
QUALITY CONTROL FOR SIGNS 115
SHEET ALUMINUM 117
RETROREFLECTIVE SHEETING 117
PROCESS COLOR AND FILM 117
10-1.29 ALTERNATIVE PIPE 118
10-1.30 PLASTIC PIPE 118
10-1.31 REINFORCED CONCRETE PIPE 118
10-1.32 CORRUGATED METAL PIPE 119
10-1.33 WELDED STEEL PIPE 119
10-1.34 BRIDGE DECK DRAINAGE SYSTEM 119
10-1.35 COMPRESSED AIR PIPE 120
10-1.36 WATER MAINS 120
MEASUREMENT AND PAYMENT 128
10-1.37 THERMOPLASTIC DELINEATION (ESA) 129
MEEASUREMENT AND PAYMENT 129
SECTION 10-3. ELECTRICAL SYSTEMS 129
10-3.01 DESCRIPTION 129
10-3.02 ABBREVIATIONS 130
10-3.03 COST BREAK-DOWN 130
10-3.04 NUMBERING ELECTRICAL EQUIPMENT 131
10-3.05 RIGID GALVANIZED STEEL CONDUIT, THREADED COUPLINGS AND ELBOWS 131
10-3.06 UNDERGROUND RACEWAYS 131
DUCTBANKS 131
MANHOLES 132
MANHOLE FRAMES AND COVERS 132
10-3.07 BONDING AND GROUNDING 132
10-3.08 PAYMENT 132

SCOPE OF WORK (CCO No. 64)

Scope of the work for Contract Change Order No. 64 for the construction consists of the following facilities:

1. Bridge No. 34-0006L/R: Only Bents W3, W4, W5, W6 of the westbound and eastbound Yerba Buena Island Transition Structures, and Bent 7 of the eastbound on-ramp as shown on the plans
2. Electrical Duct Bank at locations a shown on the plans.
3. Miscellaneous roadway work, including utilities as shown on the plans

CONTRACT NO. 04-0120R4

CONTRACT CHANGE ORDER NO 73

SHEET 14 OF 280

ENGINEER'S ESTIMATE

Item	Item Code	Item	Unit of Measure	Estimated Quantity
1	074019A	PREPARE AMENDMENT TO STORM WATER POLLUTION PREVENTION PLAN	LS	LUMP SUM
2	074020	WATER POLLUTION CONTROL	LS	LUMP SUM
3 (S)	074029	TEMPORARY SILT FENCE	M	1000
4 (S)	074032	TEMPORARY CONCRETE WASHOUT FACILITY	EA	2
5 (S)	074033	TEMPORARY CONSTRUCTION ENTRANCE	EA	1
6 (S)	074034	TEMPORARY COVER	M2	2000
7 (S)	031078	TEMPORARY DRAINAGE INLET PROTECTION	EA	12
8	129000	TEMPORARY RAILING (TYPE K)	M	90
9	129100	TEMPORARY CRASH CUSHION MODULE	EA	22
10 (S)	120090	CONSTRUCTION AREA SIGNS	LS	LUMP SUM
11 (S)	120100	TRAFFIC CONTROL SYSTEM	LS	LUMP SUM
12 (S)	120165	CHANNELIZER (SURFACE MOUNTED)	EA	10
13 (S)	120300	TEMPORARY PAVEMENT MARKER	EA	50
14	150241	ABANDON SEWER	EA	2
15	150242A	SEWER VIDEO SURVEY	LS	LUMP SUM
16	152427A	RELOCATE FIRE HYDRANT	EA	2
17	152428A	REMOVE FIRE HYDRANT	EA	1
18	152444A	ABANDON WATER MAIN	EA	7
19	150805	REMOVE CULVERT	M	225
20	150820	REMOVE INLET	EA	5
21	160101	CLEARING AND GRUBBING	LS	LUMP SUM
22	190101	ROADWAY EXCAVATION	M3	135
23	192000A	STRUCTURE EXCAVATION (DUCT BANK)	M3	5250
24	192010A	STRUCTURE EXCAVATION (TYPE H) (DUCT BANK)	M3	750
25 (F)B	192003	STRUCTURE EXCAVATION (BRIDGE)	M3	9400
26 (F)B	192020	STRUCTURE EXCAVATION (TYPE D)	M3	540
27 (S-F)B	192023	STRUCTURE EXCAVATION (TYPE H)	M3	1040

CONTRACT NO. 04-0120R4

CONTRACT CHANGE ORDER NO 73

SHEET 15 OF 250

Item	Item Code	Item	Unit of Measure	Estimated Quantity
28 (S-F)B	192024A	STRUCTURE EXCAVATION (CLASS II)	M3	50
29 (F)B	192035	STRUCTURE EXCAVATION (ROCK)	M3	7040
30 (F)B	193003	STRUCTURE BACKFILL (BRIDGE)	M3	7840
31 (S)	031083	EROSION CONTROL (NETTING)	M2	1000
32 (S)	203003	STRAW (EROSION CONTROL)	TONN	3.2
33 (S)	203014	FIBER (EROSION CONTROL)	KG	450
34 (S)	203021	FIBER ROLLS	M	250
35 (S)	203024	COMPOST (EROSION CONTROL)	M3	2.8
36 (S)	203026	MOVE -IN/MOVE-OUT (EROSION CONTROL)	EA	2
37 (S)	203045	PURE LIVE SEED (EROSION CONTROL)	KG	47
38 (S)	203061	STABILIZING EMULSION (EROSION CONTROL)	KG	98
39	260301	CLASS 3 AGGREGATE BASE	M3	62
40	390102	ASPHALT CONCRETE (TYPE A)	TONN	72
41 B	490566	FURNISH STEEL PILING (HP 360 X 132)	M	1103
42 (S)B	490567	DRIVE STEEL PILE (HP 360 X 132)	EA	91
43 B	490570A	FURNISH STEEL PILING (W 360 X 237)	M	10685
44 (S)B	490571A	DRIVE STEEL PILE (W 360 X 237)	EA	592
45 (S)B	490671	2.4 M CAST-IN-DRILLED-HOLE CONCRETE PILING	M	109
46 (S)B	490671A	2.4 M CAST-IN-DRILLED-HOLE CONCRETE PILING (ROCK SOCKET)	M	68
47 (S)B	500060	TIEDOWN ANCHOR	EA	104
48 (F)	510502	MINOR CONCRETE (MINOR STRUCTURE)	M3	34.5
49 (F)B	510051	STRUCTURAL CONCRETE, BRIDGE FOOTING	M3	9890
50 (F)B	510053	STRUCTURAL CONCRETE, BRIDGE	M3	7670
51 (S-F)B	520102	BAR REINFORCING STEEL (BRIDGE)	KG	3300400
52	620904	300 MM ALTERNATIVE PIPE CULVERT	M	54
53	620909	450 MM ALTERNATIVE PIPE CULVERT	M	95
54	620913	600 MM ALTERNATIVE PIPE CULVERT	M	31
55	703522	150 MM WELDED STEEL PIPE (3.40 MM THICK)	M	53

CONTRACT NO. 04-0120R4
CONTRACT CHANGE ORDER NO 73
SHEET 16 OF 280

Item	Item Code	Item	Unit of Measure	Estimated Quantity
56	718036	150 MM CAST IRON SEWER PIPE	M	50
57	718044A	150 MM COMPRESSED AIR PIPE	M	330
58 (S)	718045A	200 MM WATER DUCTILE IRON PIPE	M	400
59 (S-F)	750001	MISCELLANEOUS IRON AND STEEL	KG	1600
60 (S-F)B	750505	BRIDGE DECK DRAINAGE SYSTEM	KG	830
61	840563A	200 MM THERMOPLASTIC TRAFFIC STRIPE (ESA)	M	260
62 (S)	860556A	UNDERGROUND RACEWAYS ELECTRICAL SYSTEM	LS	LUMP SUM

7 CONTRACT NO. 04-0120R4

CONTRACT CHANGE ORDER NO 73

5-1.01 WORKING DRAWINGS

Working drawings shall conform to the requirements in Section 5-1.02, "Plans and Working Drawings," of the Standard Specifications and these special provisions. Working drawings shall include supplements and calculations that are in addition to drawings.

Working drawings shall be submitted to the following location:

California Department of Transportation
Office of the Resident Engineer, Contract 04-0120R4
~~280 Beale Street~~ 333 Burma Road
~~San Francisco, CA 94105~~ Oakland, CA 94607

Working drawings shall conform to the following:

A. For initial review, 6 sets of the working drawings, shall be submitted. After the Engineer has determined that a submittal is complete, 12 additional sets shall be submitted.
B. Drawings shall be 559 mm x 864 mm or 279 mm x 432 mm in size. Supplements and calculations shall be 216 mm x 280 mm n size.
C. For drawings, text size shall be nominally 2.8 mm high, minimum. For supplement and calculations, font size shall be 12, minimum.
D. Each working drawing sheet and each page of supplement or calculation, shall include the jobsite name of the structure as shown on the contract plans, District-County-Route-Kilometer Post, bridge number and contract number.
E. Text and details shall be legible and suitable for photocopying and reduction.
F. In addition to the paper copies of the working drawings, electronic files shall be submitted. Electronic files shall be portable document format (PDF) and shall be submitted on compact disk (CD) media. Each plan sheet shall be a separate PDF file on the CD. The electronic copy of the calculations and supplement shall be made into separate PDF files so that no more than 50 pages are included in a single file on the CD. The CD shall contain an index consisting of the file names and a description of the corresponding file contents. The files shall be listed in the sequence of: 1) index, 2) drawings, 3) supplement, and 4) calculations. If more than one CD is used for a given working drawing submittal, the index shall be included on each CD.
G. Microfilms are required for approved shop drawings and shall be only a 24x reduction. The edge of the corrected original tracing image shall be clearly visible and visually parallel with the edges of the page. A clear, legible symbol shall be provided on the upper left side of each page to show the amount of reduction, and a horizontal and vertical scale shall be provided on each reduced print to facilitate enlargement to original scale.
H. At the completion of the contract, one compiled set of all approved working drawings (in electronic form and including all corrections and revisions) shall be furnished to the Engineer. The index shall be the first file on the CD.
I. At the completion of the contract, one set of reduced prints on 75-g/m2 (minimum) bond paper, 279 mm x 432 mm in size, of the corrected original tracings of all approved working drawings, including all corrections and revisions shall be furnished to the

CONTRACT NO. ~~04-0120R4~~

CONTRACT CHANGE ORDER NO 73

Engineer. Reduced prints that are common to more than one structure shall be submitted for each structure. An index prepared specifically for the drawings for each structure containing sheet numbers and titles shall be included on the first reduced print in the set for each structure. Reduced prints for each structure shall be arranged in the order of drawing numbers shown in the index.

Working drawings shall be stamped and signed by an engineer who is registered as a Civil Engineer in the State of California. When independently checked calculations are required, these calculations shall be stamped and signed by another engineer who is registered as a Civil Engineer in the State of California.

Working drawings shall be submitted sufficiently in advance of the start of the affected work to allow time for review by the Engineer and correction by the Contractor of the drawings without delaying the work. The time shall be proportional to the complexity of the work, but in no case shall the time be less than the review time as specified for the type of working drawings as required elsewhere in these special provisions.

The Engineer will review a working drawing submittal for completeness. Within ten working days of the receipt of the submittal by the Engineer, the Engineer will notify the Contractor in writing if the submittal is determined to be incomplete. If the submittal is determined to be complete, thirty working days from the day of receipt shall be allowed for approval or return for correction of each submittal or resubmittal, unless specified otherwise in the special provisions.

Should the Engineer fail to review the complete working drawing submittal within the time specified, and the Contractor's controlling operation on the critical path is delayed (as determined by the Engineer) by the Engineer's failure to review within the time specified, an extension of time will be granted in conformance with the provisions in Section 8-1.07, "Liquidated Damages," of the Standard Specifications and in "Progress Schedule (Critical Path Method)," of these special provisions. Should the Engineer fail to review the complete working drawing submittal within the time specified, compensation, if any, will be made in accordance with Section 8-1.09, "Right of Way Delays," of the Standard Specifications, and "Time Related Overhead," of these special provisions.

5-1.02 INTEGRATED SHOP DRAWINGS

Difficult reinforcement placement is anticipated at the:

A. Reinforcement at column penetrations for drain pipes and electrical conduits
B. Reinforcement at column/footing intersections.

These locations are especially highly congested with reinforcing steel, high strength rods, post-tensioning strand tendons, anchor bolts, and other concrete embedded items as shown on the plans. It is anticipated that various dimensional conflicts may be encountered between the planned locations of these embedded items.

The Contractor shall develop three-dimensional integrated shop drawings (ISD's) for all locations listed above in accordance with the details shown on the plans and the requirements of this section. ISD's shall conform to Section "Working Drawings," of these special provisions. ISD's shall be prepared under the supervision of an engineer who is registered as a Civil Engineer in the State of California. ISD's shall be composite placing drawings to scale and in

CONTRACT NO. 04-0120R4
CONTRACT CHANGE ORDER NO 73
SHEET 19 OF 280

sufficient detail to show the relative positions of all items that are to be embedded in the concrete and their embedment depth as necessary to demonstrate compatibility of items within the concrete.

Prior to commencing work on the ISD, the Contractor (including any sub-consultants hired to work on the ISD) shall attend a meeting with the Engineer to discuss the ISD work.

Embedded items that are to be shown on the ISD's shall include but are not limited to, the following:

A. Bar reinforcing steel and splices including lap, welded, and mechanical splices
B. Drainage pipe
C. Other items, as shown on the plans or added by the Contractor

The three-dimensional ISD's shall be adequate to ensure that there will be no conflict between the planned positions of any embedded items and that concrete cover will be adequate.

If conflicts are discovered during the preparation of ISD's, the Contractor shall revise the working drawings for one or more of the embedded items to eliminate the conflict or provide proper cover or spacing. If a conflict requires that bar reinforcement locations be adjusted, the Contractor shall proceed with performing reinforcing steel adjustments in the ISD's prior to submitting the changes to the Engineer.

The ISD's to be submitted to the Engineer shall include the following:

A. ISD submittal shall be in two-dimensional format utilizing the three-dimensional layouts as input.
B. Three sets of the ISD's corresponding to the details as shown on the plans with incorporation of any Contractor's adjustments in the locations of embedded items. These ISD's shall resolve all conflicts and satisfy concrete cover requirements as shown on the plans. The initial ISD submittal for a particular area shall clearly identify all adjustments to the locations of embedded items made as part of the Contractor's conflict resolution process.
C. Three copies of the ISD's in electronic form on compact discs or tape for use by the Engineer.

CAD files of the contract drawings will not be made available to the Contractor.

After completed ISD's are received by the Engineer, the Contractor shall allow the Engineer 8 weeks for review and approval. For each revised ISD's submitted by the Contractor, the Contractor shall allow the Engineer an additional 2 weeks for review and approval. Construction of the items listed above-shall not begin until the Engineer reviews and approves the complete ISD's with all conflicts resolved.

No extension of time will be permitted for the Contractor's failure to identify all conflicts or to complete the ISD's as required by these special provisions.

Full compensation for preparing ISD's, including all revisions necessary due to conflict resolution measures taken by the Contractor, shall be considered as included in the contract prices paid for the various items of work involved and no additional compensation will be allowed therefor.

CONTRACT NO. 04-0120R4

CONTRACT CHANGE ORDER NO 73

SHEET 20 OF 280

5-1.03 PAYMENTS

Attention is directed to Sections 9-1.06, "Partial Payments," and 9-1.07, "Payment After Acceptance," of the Standard Specifications and these special provisions.

In determining the partial payments to be made to the Contractor, only the following listed materials will be considered for inclusion in the payment as materials furnished but not incorporated in the work:

A. Steel Piling
B. Tiedown anchor
C. Bar reinforcing steel
D. Bridge deck drainage system

5-1.04 PROJECT INFORMATION

The information in this section has been compiled specifically for this project and is made available for bidders and Contractors. Other information referenced in the Standard Specifications and these special provisions do not appear in this section. The information is subject to the conditions and limitations set forth in Section 2-1.03, "Examination of Plans, Specifications, Contract, and Site of Work," and Section 6-2, "Local Materials," of the Standard Specifications. Bidders and Contractors shall be responsible for knowing the procedures for obtaining information.

Information attached to the project plans is as follows:

A. Log of Test Borings

Information available for inspection at the District Office is as follows:

Cross sections are available in paper copy.

Bidders and Contractors may contact the Transportation Laboratory to request viewing rock cores via electronic mail at the following address:

Coreroom@dot.ca.gov

Request shall be submitted at least 5 working days before the intended date for viewing, and shall include the District-County-Route, bridge number, contract number, viewing date, and contact information including telephone number.

Plans of the existing bridges may be requested by fax from the Office of Structure Maintenance and Investigations, 1801 30th Street, Sacramento, CA, Fax (916) 227-8357.

Plans of the existing bridges may be requested by fax from the Office of Structure Maintenance and Investigations, 1801 30th Street, Sacramento, CA, Fax (916) 227-8357, and are available at the Office of Structure Maintenance and Investigations, Los Angeles, CA, Telephone (213) 897-0877.

5-1.05 AREAS FOR CONTRACTOR'S USE

Attention is directed to the requirements specified in Section 7-1.19, "Rights in Land and Improvements," of the Standard Specifications, plans and these special provisions.

CONTRACT NO. 04-0120R4

CONTRACT CHANGE ORDER NO 73

SHEET 21 OF 280

The highway right of way shall be used only for purposes that are necessary to perform the required work. The Contractor shall not occupy the right of way, or allow others to occupy the right of way, for purposes which are not necessary to perform the required work.

The Contractor's attention is directed to "Cooperation," of these special provisions, and the Contractor shall use only the designated areas for Contractor's use as specified in this section, and as shown on the plans and as follows:

1. **Area PR:** it is available for the contractor's use for the entire contract period except as limited by other areas as defined on the contract plans and these special provisions. The Contractor shall permit access by other contractors as directed by the Engineer.
2. **Area FPR:** it. is primarily available to Contract 04-0120R4 until May 1, 2007. Prior to May 1, 2007, the Contractor shall coordinate any planned work in area FPR with the Engineer and Contract 04-0120R4 contractor. After May 1, 2007, area FPR shall be considered a part of area FP.
3. **Area FP:** it is available for use by the 04-0120F4 contract until November 30, 2007. The area FP shall then be made available to the contractor constructing the YBI transition structures under contract 04-0120S4 until May 1, 2009.
4. **Area EF:** is primarily available to Contract 04-0120E4 until March 31, 2008, and then to this contract after that date. Prior to March 31, 2008, the Contractor shall coordinate any planned work in area EF with the Engineer and Contract 04-0120E4 contractor. Additionally, footings at tower T1 and footing and piers at Pier E2 to be constructed by others under Contract 04-0120E4 will be substantially complete by March 31, 2008, to allow the Contractor to complete the tower and E2 work specified under the contract.
5. **Area CE:** is designated for use by Contract 04-0120E4 until March 31, 2008. The Contractor shall have access through area CE to the work area at Pier W2. After March 31, 2008, the area CE becomes a part of the area provided to the Yerba Buena Island Structures contractor on contract 04-0120S4. The Contractor shall continue to have access through the area to the work area at Pier W2.

The Contractor shall maintain access to the Torpedo Factory area at the east end of Yerba Buena Island at all times during the contract. Access may be via the existing Torpedo Factory Road or other routing as approved by the Engineer.

No area is available within the contract limits for the exclusive use of the Contractor. However, temporary storage of equipment and materials on State property may be arranged with the Engineer, subject to the prior demands of State maintenance forces and to other contract requirements. Use of the Contractor's work areas and other State-owned property shall be at the Contractor's own risk. The State shall not be held liable for damage to or loss of materials or equipment located within these areas.

Toll plaza parking lots shall not be used for the Contractor's employees private vehicles and the Contractor's equipment and vehicles.

The Contractor shall remove the equipment, materials, and rubbish from the work areas and other State-owned property which the Contractor occupies and shall leave the areas in a presentable condition, in conformance with the provisions in Section 4-1.02, "Final Cleaning Up," of the Standard Specifications.

The Contractor shall secure, at the Contractor's own expense, areas required for storage of plant, equipment, and materials, or for other purposes if sufficient area is not available to the Contractor within the contract limits.

CONTRACT NO. 04-0120R4

CONTRACT CHANGE ORDER NO 73

SHEET 22 OF 280

5-1.06 UTILITIES

The Contractor shall make arrangements to obtain electrical power, water or compressed air or other utilities required for the Contractor's operations and shall make and maintain the necessary service connections at the Contractor's own expense.

5-1.07 SANITARY PROVISIONS

State sanitary facilities will not be available for use by the Contractor's employees.

5-1.08 BRIDGE TOLLS

Toll-free passage on the San Francisco-Oakland Bay Bridge will be granted only for cars, trucks and special construction equipment which are clearly marked on the exterior with the Contractor's identification and which are being operated by the Contractor exclusively for the project, and which are used for the purpose of transporting materials and workers directly to and from the project site.

The Contractor shall make application to the Engineer in advance for toll-free passage. The Contractor will be held accountable for the proper use of passes issued, and upon completion of the work, shall return unused passes to the Engineer.

Attention is directed to Section 23302, "Evasion of Toll," of the Vehicle Code.

5-1.09 PERMITS AND LICENSES

Attention is directed to Section 7-1.04, "Permits and Licenses," of the Standard Specifications and these special provisions.

The Department has obtained the permits and licenses from the following agencies for this project:

A. California Regional Water Quality Control Board (RWQCB)
B. U.S. Army Corps of Engineers (ACOE)
C. San Francisco Bay Conservation Development Commission (BCDC)
D. United States Coast Guard (USCG)
E. California Department of Fish and Game (CDFG)

These permits has been made available to the Contractor as part of the information handout for the 04-0120R4 Contract.

Forupdated versions of environmental permits, the Contractor shall visit the website:

www.biomitigation.org

Full compensation for conforming to the requirements in these permits and licenses shall be considered as included in the prices paid for the various contract items of work and no additional compensation will be allowed therefor.

5-1.10 HAZARDOUS MATERIAL, GENERAL

Attention is directed to "Earthwork" of these special provisions regarding the removal and disposal of hazardous material described in this section.

CONTRACT NO. 04-0120R4

CONTRACT CHANGE ORDER NO 73

SHEET 23 OF 280

Contaminants have been discovered through testing within the project limits. Testing consisted of collecting and analyzing in situ samples from within the project limits. Summary tables of the test results are included in the "Materials Information." The complete report entitled "Site Investigation Report, SFOBB East Span Seismic Safety Project, Yerba Buena Island" is available for inspection at the office of the Duty Senior, 111 Grand Avenue, Oakland, CA 94612, email: , telephone (510) 286-5209, and fax number: (510) 622-1805. These test results have been used for disposal characterization of material within the excavation limits and shall not be construed as identifying all locations within the project limits that contain contaminants.

Wherever the following terms are used in the contract documents, the meaning and intent shall be interpreted as provided below:

A. Hazardous material – Material that contains contaminants at concentrations equal to or greater than the threshold limit concentrations listed in Section 66261.24 of Title 22 of the California Code of Regulations.
B. Class II material – Material that contains contaminants, typically petroleum hydrocarbons, at concentrations that require handling of the material as a Designated Waste as defined in Section 13173 of the California Water Code but does not contain contaminants at concentrations equal to or greater than the threshold limit concentrations listed in Section 66261.24 of Title 22 of the California Code of Regulations. This material is unsuitable for reuse within the project limits.

Characterization and disposal of additional material resulting from excavations performed outside of the pay limits shown on the plans, specified in the Standard Specifications, or specified or directed by the Engineer, for the Contractor's convenience, shall be at the Contractor's expense. This resultant material shall be presumed to be either non-hazardous material or hazardous material if the test results for the location indicate that the material being excavated is non-hazardous material or hazardous material. The Contractor shall dispose of the resultant material in conformance with the provisions in "Earthwork" of these special provisions. When the material must be removed from highway right of way, the Contractor shall furnish replacement material suitable for the purpose intended in conformance with the provisions in Section 19, "Earthwork," of the Standard Specifications.

APPLICABLE RULES AND REGULATIONS

Excavation, transport and disposal of hazardous material shall be in conformance with the rules and regulations of the following agencies:

United States Department of Transportation (USDOT)
United States Environmental Protection Agency (USEPA)
California Environmental Protection Agency (CAL-EPA)
1. Department of Toxic Substance Control (DTSC)
2. Integrated Waste Management Board
3. Regional Water Quality Control Board, Region 2 (RWQCB)
4. State Air Resources Board

Bay Area Air Quality Management District (BAAQMD)
California Division of Occupational Safety and Health Administration (CAL-OSHA)

PERMITS AND LICENSES

The Contractor shall procure all permits and licenses, pay all charges and fees, and give all notices necessary and incident to the due and lawful prosecution of the work, including registration for transporting vehicles carrying hazardous material, in conformance with the provisions in Section 7-1.04, "Permits and Licenses," of the Standard Specifications.

The Engineer will obtain the Environmental Protection Agency Generator Identification Number and Board of Equalization Identification Number and sign all manifests as the Generator.

SITE HEALTH AND SAFETY PLAN

The Contractor shall prepare a detailed Site Health and Safety Plan for all site personnel, including State personnel, that identifies potential health and safety hazards associated with each operation and specifies work practices that will be used to protect workers from those hazards in conformance with the DTSC and CAL-OSHA regulations. At a minimum, the Site Health and Safety Plan shall identify key site safety personnel, describe risks associated with the work, describe training requirements, describe appropriate personal protective equipment, describe any site-specific medical surveillance requirements, describe any periodic air monitoring requirements, define appropriate site work zones, and describe any decontamination requirements. The Site Health and Safety Plan shall be submitted at least 15 working days prior to beginning any excavation work for review and acceptance by the Engineer. Prior to submittal, the Contractor shall have the Site Health and Safety Plan approved by an Industrial Hygienist certified by the American Board of Industrial Hygiene. Subcontractors shall use the Site Health and Safety Plan prepared by the Contractor or prepare and submit a separate Site Health and Safety Plan in conformance with the provisions in this section.

SAFETY TRAINING

Prior to performing any work, all personnel, including State personnel, shall complete a safety training program that communicates the potential health and safety hazards associated with work on the site and instructs the personnel in procedures for doing the work safely. The level of training provided shall be consistent with the personnel's job function and conform to CAL-OSHA regulations. The training, including subsequent training required until completion of the project, shall be provided by the Contractor. The Contractor shall provide a certification of completion of the Safety Training Program to all personnel. Personal protective equipment required by State personnel to inspect the work shall be provided by the Contractor. The number of State personnel requiring the above mentioned safety training program and personal protective equipment will be 25.

PAYMENT

Full compensation for conforming to the requirements of this section shall be considered as included in the prices paid for the various contract items of work affected by this section and no additional compensation will be allowed therefor.

5-1.11 ENVIRONMENTALLY SENSITIVE AREAS (GENERAL)

A. ENVIRONMENTALLY SENSITIVE AREAS

Environmentally sensitive areas (ESA) shall consist of areas within and near the limits of construction where access is prohibited or limited for the preservation of archeological site, historic architectural resource or existing vegetation, or protection of biological habitat as shown on the plans. The Engineer will determine the exact location of the boundaries of the ESAs. No work shall be conducted within the ESAs, except ESAs 1a and 1b:

1. ESA 1a and 1b, Environmentally Sensitive Areas
   ESA 1a consists of asphalt concrete paved area and unpaved slope area.
   ESA 1b is located within the asphalt concrete paved area.
   The boundaries of the paved areas of the ESAs 1a and 1b shall be installed with a 200-mm white thermoplastic delineation.
   Within the paved areas and delineated boundaries of the ESAs 1a and 1b, no work involving asphalt removal or earth disturbance and/or removal, including but not limited to driving posts for fencing, signing, or utility trenching, shall be allowed.. Limited access to these ESAs may be allowed for vehicle and equipment access, storage or transport of materials or equipment vehicle or equipment access, storage and stockpiling, or transport of materials, when approved in writing by the Engineer.
   Within the unpaved slope area of ESA 1a, no work involving earth disturbance, including but not limited to driving posts for fencing, or signing, shall be allowed. The Contractor shall submit to the Engineer the protection plans including the scope of the work, in conformance with the requirements in "Working Drawings," of these special provisions. The Contractor equipment access will not be allowed, unless the Contractor has obtained a written approval from the Engineer.
2. ESA 2a, 2b and 2c
   ESA 2a consists of Building No. 262 (Torpedo Factory), Historic Architectural Resource
   ESA 2b consists of the Senior Officers' Quarters Historic District (Quarters 1 through 7), Historic Architectural Resource, and grounds.
   ESA 2c consists of Quarters 8, and grounds
3. ESA 3, Quarters 10, Building 267 (garage), and grounds.
4. ESA 5, Vegetation, Environmentally Sensitive Areas, including mature vegetation screen located on slope southwest of Quarters 1 (Nimitz House), and pittosporum trees
5. ESA 6, Tidal wetlands, water-based ESA (by others), located on the north side of YBI
6. ESA 7, Eelgrass beds, water-based ESA (by others), located on the south sides of YBI
7. ESA 8, Eelgrass beds, water-based ESA (by others), located on the north sides of YBI
8. ESA 9a and 9b, concrete retaining walls and weir,Historic Architectural Resource

Attention is directed to Section 7—1.01 "Laws to be Observed," and Section 7—1.04 "Permits and Licenses," of the Standard Specifications regarding State and Federal regulations, permits, or agreements which pertain to an ESA.

Water-based ESA boundaries have been marked with USCG-approved buoys, and have been established and will be maintained by others.

Land-based ESA boundaries shall be clearly marked by either the installation of Temporary Fence (Type ESA) or thermoplastic pavement delineation as specified elsewhere in these special provisions. The boundaries shall be checked periodically and the markings repaired or replaced as necessary during construction.

Within the boundaries of land-based ESAs 1a (unpaved area), ESAs 2b and 2c, ESA 3, ESA 5, and ESA 9a and 9b and water-based ESAs 6, 7, and 8, no project related activities shall take place, without the written approval from the Engineer. This specifically prohibits vehicle and barge access, storage or transport of any materials, including hydrocarbon and lead contaminated material, or any other project related activities. The Contractor shall take such measures, including the posting of written notices to his employees and subcontractors, to ensure that ESAs are not entered or disturbed.

The Contractor shall mitigate damage or impacts to the ESAs caused by the Contractor's operations, at the Contractor's expense in accordance with Section 7-1.11 of the Standard Specifications. Any additional mitigation assessed to the Department will be the responsibility of the Contractor. If necessary, deductions from moneys due or to become due the Contractor will be made for the mitigation costs.

RESOURCE REGULATIONS AND MANDATES

In compliance with Section 106 of the National Historic Preservation Act of 1966, any archaeological resource discovered during construction activities must be evaluated by the Department of Transportation Archaeologist.

The California Public Resources Code (PRC) Sections 5097.00 and 5097.98 require protection of Native American remains which might be discovered and outlines procedures for handling any burials found. The California PRC Section 5097.9 and Health and Safety Code Section 7050 require coordination with the Native American Heritage Commission.

Under California PRC, Chapter 1.7, Section 5097.5, it is a misdemeanor charge for anyone to knowingly disturb a historical feature or steal an archaeological resource. The California Administrative Code, Title 14, Section 4307, mandates that no person shall disfigure any object of historical interest or value. Under California Penal Code, Title 14, Part 1, Section 622-1.2, it is a misdemeanor to destroy anything of historical value within any public place.

All archaeological resources located on Department of Transportation property are property of the State of California. All archaeological resources located on Federal property are property of the Federal government and are governed by federal environmental laws, such as, but not limited to, the Antiquities Act of 1906, the Archaeological Resources Protection Act, and the Native American Graves Protection and Repatriation Act.

PROTECTION OF ESA 2a, BUILDING No. 262

Attention is directed to Section 7-1.12, "Preservation of Property," and Section 7-1.12, "Responsibility for Damage," of the Standard Specifications, and the provisions in "Photo Survey of Existing Facilities," and "Vibration Monitoring," of these special provisions, regarding Building No. 262, a historical building that is included in ESA 2.

Attention is directed to "Project Information," of the special provisions, regarding the as-built plans of Building No. 262.

The Contractor shall take measures to protect the building from damage caused by the Contractor's operations. The Contractor shall submit a building protection plan for the Engineer's review at least 30 days prior to the start of adjacent or overhead construction. The Contractor shall also notify the Engineer at least 48 hours prior to the start of adjacent or overhead construction.

The Contractor shall bear full liability for any damage to Building No. 262 caused by the Contractor's operations.

Should any damage to Building No. 262 occur, the Contractor shall notify the Engineer within 24 hours. The Engineer may order the suspension of construction operations until the Contractor takes all necessary measures to prevent further damage to the building, and until an approved repair is completed. The Contractor shall submit a repair plan to the Engineer for approval prior to the start of such work. The Engineer will review the plan within 90 days. All repairs must follow the Secretary of the Interior's Standards for the Treatment of Historic Properties (http://www2.cr.nps.gov/tps/standguide/index.htm), and must be undertaken by a licensed preservation architect who meets the Secretary of the Interior's Professional Qualifications Standards for Historic Architecture (http://www.cr.nps.gov/local-law/arch_stnds_9.htm). The Department may retain not less than $2,100,000 from moneys due or that may become due the Contractor under the contract, until an approved repair or reconstruction is complete.

B. AREA TO BE MONITOR (ATM)

The Department Archeologist will monitor the delineated ATM area.

No construction activities involving asphalt removal or earth disturbance and/or removal shall be allowed within the ATM area shown on the plans, unless the Contractor has obtained a writing approval from the Engineer.

The Contractor shall obtained the Engineer's approval in writing at least 20 days in advance of the beginning of the removal of the top 0.6-m in depth of roadway excavation within the ATM, in order to have the Department Archaeologist begin to mobilize

CONSTRUCTION

The Department Archaeologist shall have the authority to halt construction operations in the vicinity of an archaeological find, if significant or potentially significant cultural resources are exposed or if the find will be adversely affected by construction operations.

In the event that human skeletal material or archaeological resources should be uncovered within the ATM area and/or contract limits, the Contractor shall immediately notify the Engineer, who in turn will notify the Department Archaeologist and the State may conduct an archaeological investigation. The Contractor's construction activities within 15-m of the find shall be halted immediately and shall not be resumed until so permitted, in writing by the Engineer.

When determined by the Department Archeologist that an archeological investigation is required, and as requested by the Engineer, the Contractor shall provide construction equipment and operators and/or laborers and shall cooperate with and assist Department Archaeologist(s) in their conducting of any of the archaeological work, if necessary.

The Contractor shall provide, within 24 hours at the request of the Engineer:

1. A grading bucket with flat blade.
2. Suitable access/egress ramp or ladders or stairs in the ATM area as directed by the Engineer.

The above equipment and material items required for the archaeological work as specified in this sectionwill be paid for as extra work as provided in Section 4-1.03D of the Standard Specifications.

CONTRACT NO. 04-0120R4

CONTRACT CHANGE ORDER NO 73

SHEET 28 OF 280

If, in the opinion of the Engineer, the Contractor's operations are delayed or interfered with by reason of such discoveries, the State will compensate the Contractor for the delays to the extent provided in Section 8-1.09, "Right of Way Delays," of the Standard Specifications, and not otherwise, except as provided in Section 8-1.10, "Utility and Non-Highway Facilities," of the Standard Specifications.

C. SPECIAL CONSTRUCTION AREA (SCA)

The special construction area is designated as the landscaping restoration area to be constructed by others.

The Contractor will be allowed inside SCA area. The Contractor shall not encroach into the designated ESA area bounded by ESA 2b, the Senior Officers' Quarters Historic District (Quarters 1 through 7), as shown on the plans. Damages to the existing pavement, sidewalk and cub caused by the Contractor's operations, shall be replaced in kind at the Contractor's expenses.

PAYMENT

Full compensation for checking, repairing or replacing the land-based ESA marking shall be considered as included in the contract price paid for various items of work involved and no separate payment will be made therefor.

Full compensation for protecting and submitting the protection plan for the unpaved slope area of the ESA 1a shall be considered as included in the contract price paid for various items of work involved and no separate payment will be made therefor.

5-1.12 SOUND CONTROL REQUIREMENTS

Sound control shall conform to the provisions in Section 7-1.01I, "Sound Control Requirements," of the Standard Specifications and these special provisions.

The noise level from the Contractor's operations, between the hours of 7:00 p.m. and 7:00 a.m., shall not exceed 78 dbA at a distance of 15 m from the source. Impact-type mechanical operations, such as pile-driving and jack-hammering shall not be conducted between the hours of 7:00 p.m. and 7:00 a.m. At all times, the Contractor shall be responsible for complying with local ordinances regulating noise levels as well as the sound requirements of this section.

The noise level requirement shall apply to the equipment on the job or related to the job, including but not limited to trucks, transit mixers or transient equipment that may or may not be owned by the Contractor. The use of loud sound signals shall be avoided in favor of light warnings except those required by safety laws for the protection of personnel.

Full compensation for conforming to the requirements of this section shall be considered as included in the prices paid for the various contract items of work involved and no additional compensation will be allowed therefor.

Noise monitoring activities will be conducted by the Department of Transportation. The Contractor shall coordinate with the Department of Transportation monitors and allow them access to noise monitoring locations.

8-1.01 SUBSTITUTION OF NON-METRIC MATERIALS AND PRODUCTS

Only materials and products conforming to the requirements of the specifications shall be incorporated in the work. When metric materials and products are not available, and when approved by the Engineer, and at no cost to the State, materials and products in the United States Standard Measures which are of equal quality and of the required properties and characteristics

for the purpose intended, may be substituted for the equivalent metric materials and products, subject to the following provisions:

A. Materials and products shown on the plans or in the special provisions as being equivalent may be substituted for the metric materials and products specified or detailed on the plans.
B. Before other non-metric materials and products will be considered for use, the Contractor shall furnish, at the Contractor's expense, evidence satisfactory to the Engineer that the materials and products proposed for use are equal to or better than the materials and products specified or detailed on the plans. The burden of proof as to the quality and suitability of substitutions shall be upon the Contractor and the Contractor shall furnish necessary information as required by the Engineer. The Engineer will be the sole judge as to the quality and suitability of the substituted materials and products and the Engineer's decision will be final.
C. When the Contractor elects to substitute non-metric materials and products, including materials and products shown on the plans or in the special provisions as being equivalent, the list of sources of material specified in Section 6-1.01, "Source of Supply and Quality of Materials," of the Standard Specification shall include a list of substitutions to be made and contract items involved. In addition, for a change in design or details, the Contractor shall submit plans and working drawings in conformance with the provisions in Section "Working Drawings," of these special provisions. The plans and working drawings shall be submitted at least 7 days before the Contractor intends to begin the work involved.

Unless otherwise specified, the following substitutions of materials and products will be allowed:

SUBSTITUTION TABLE FOR PLAIN WIRE REINFORCEMENT
ASTM Designation: A 82

METRIC SIZE SHOWN ON THE PLANS mm^2	SIZE TO BE SUBSTITUTED $inch^2 \times 100$
MW9	W1.4
MW10	W1.6
MW13	W2.0
MW15	W2.3
MW19	W2.9
MW20	W3.1
MW22	W3.5
MW25	W3.9, except W3.5 in piles only
MW26	W4.0
MW30	W4.7
MW32	W5.0
MW35	W5.4
MW40	W6.2
MW45	W6.5
MW50	W7.8
MW55	W8.5, except W8.0 in piles only
MW60	W9.3
MW70	W10.9, except W11.0 in piles only
MW80	W12.4
MW90	W14.0
MW100	W15.5

SUBSTITUTION TABLE FOR BAR REINFORCEMENT

METRIC BAR DESIGNATION NUMBER[1] SHOWN ON THE PLANS	BAR DESIGNATION NUMBER[2] TO BE SUBSTITUTED
10	3
13	4
16	5
19	6
22	7
25	8
29	9
32	10
36	11
43	14
57	18

[1]Bar designation numbers approximate the number of millimeters of the nominal diameter of the bars.

[2]Bar numbers are based on the number of eighths of an inch included in the nominal diameter of the bars.

No adjustment will be required in spacing or total number of reinforcing bars due to a difference in minimum yield strength between metric and non-metric bars.

SUBSTITUTION TABLE FOR SIZES OF:

(1) STEEL FASTENERS FOR GENERAL APPLICATIONS (ASTM Designation: A 307 or AASHTO Designation: M 314, Grade 36 or 55), and

(2) HIGH STRENGTH STEEL FASTENERS (ASTM Designation: A 325 or A 449)

METRIC SIZE SHOWN ON THE PLANS mm	SIZE TO BE SUBSTITUTED inch
6 or 6.35	1/4
8 or 7.94	5/16
10 or 9.52	3/8
11 or 11.11	7/16
13, 12.70, or M12	1/2
14 or 14.29	9/16
16, 15.88, or M16	5/8
19, 19.05, or M20	3/4
22, 22.22, or M22	7/8
24, 25, 25.40, or M24	1
29, 28.58, or M27	1-1/8
32, 31.75, or M30	1-1/4
35 or 34.93	1-3/8
38, 38.10, or M36	1-1/2
44 or 44.45	1-3/4
51 or 50.80	2
57 or 57.15	2-1/4
64 or 63.50	2-1/2
70 or 69.85	2-3/4
76 or 76.20	3
83 or 82.55	3-1/4
89 or 88.90	3-1/2
95 or 95.25	3-3/4
102 or 101.60	4

CONTRACT NO. _____

CONTRACT CHANGE ORDER NO _____

SHEET 22 OF 29

SUBSTITUTION TABLE FOR NOMINAL THICKNESS OF SHEET METAL

UNCOATED HOT AND COLD ROLLED SHEETS		HOT-DIPPED ZINC COATED SHEETS (GALVANIZED)	
METRIC THICKNESS SHOWN ON THE PLANS mm	GAGE TO BE SUBSTITUTED inch	METRIC THICKNESS SHOWN ON THE PLANS mm	GAGE TO BE SUBSTITUTED inch
7.94	0.3125	4.270	0.1681
6.07	0.2391	3.891	0.1532
5.69	0.2242	3.510	0.1382
5.31	0.2092	3.132	0.1233
4.94	0.1943	2.753	0.1084
4.55	0.1793	2.372	0.0934
4.18	0.1644	1.994	0.0785
3.80	0.1495	1.803	0.0710
3.42	0.1345	1.613	0.0635
3.04	0.1196	1.461	0.0575
2.66	0.1046	1.311	0.0516
2.28	0.0897	1.158	0.0456
1.90	0.0747	1.006 or 1.016	0.0396
1.71	0.0673	0.930	0.0366
1.52	0.0598	0.853	0.0336
1.37	0.0538	0.777	0.0306
1.21	0.0478	0.701	0.0276
1.06	0.0418	0.627	0.0247
0.91	0.0359	0.551	0.0217
0.84	0.0329	0.513	0.0202
0.76	0.0299	0.475	0.0187
0.68	0.0269	--------	--------
0.61	0.0239	--------	--------
0.53	0.0209	--------	--------
0.45	0.0179	--------	--------
0.42	0.0164	--------	--------
0.38	0.0149	--------	--------

CONTRACT NO. 04-0120R4

CONTRACT CHANGE ORDER NO 73

SHEET 33 OF 250

SUBSTITUTION TABLE FOR WIRE

METRIC THICKNESS SHOWN ON THE PLANS mm	WIRE THICKNESS TO BE SUBSTITUTED inch	GAGE NO.
6.20	0.244	3
5.72	0.225	4
5.26	0.207	5
4.88	0.192	6
4.50	0.177	7
4.11	0.162	8
3.76	0.148	9
3.43	0.135	10
3.05	0.120	11
2.69	0.106	12
2.34	0.092	13
2.03	0.080	14
1.83	0.072	15
1.57	0.062	16
1.37	0.054	17
1.22	0.048	18
1.04	0.041	19
0.89	0.035	20

SUBSTITUTION TABLE FOR PIPE PILES

METRIC SIZE SHOWN ON THE PLANS mm x mm	SIZE TO BE SUBSTITUTED inch x inch
PP 360 x 4.55	NPS 14 x 0.179
PP 360 x 6.35	NPS 14 x 0.250
PP 360 x 9.53	NPS 14 x 0.375
PP 360 x 11.12	NPS 14 x 0.438
PP 406 x 12.70	NPS 16 x 0.500
PP 460 x T	NPS 18 x T"
PP 508 x T	NPS 20 x T"
PP 559 x T	NPS 22 x T"
PP 610 x T	NPS 24 x T"
PP 660 x T	NPS 26 x T"
PP 711 x T	NPS 28 x T"
PP 762 x T	NPS 30 x T"
PP 813 x T	NPS 32 x T"
PP 864 x T	NPS 34 x T"
PP 914 x T	NPS 36 x T"
PP 965 x T	NPS 38 x T"
PP 1016 x T	NPS 40 x T"
PP 1067 x T	NPS 42 x T"
PP 1118 x T	NPS 44 x T"
PP 1219 x T	NPS 48 x T"
PP 1524 x T	NPS 60 x T"

The thickness in millimeters (T) represents an exact conversion of the thickness in inches (T").

CONTRACT NO. 04-0120R4

CONTRACT CHANGE ORDER NO 73

SUBSTITUTION TABLE FOR CIDH CONCRETE PILING

METRIC SIZE SHOWN ON THE PLANS	ACTUAL AUGER SIZE TO BE SUBSTITUTED inches
350 mm	14
400 mm	16
450 mm	18
600 mm	24
750 mm	30
900 mm	36
1.0 m	42
1.2 m	48
1.5 m	60
1.8 m	72
2.1 m	84
2.4 m	96
2.7 m	108
3.0 m	120
3.3 m	132
3.6 m	144
4.0 m	156

SUBSTITUTION TABLE FOR STRUCTURAL TIMBER AND LUMBER

METRIC MINIMUM DRESSED DRY, SHOWN ON THE PLANS mm x mm	METRIC MINIMUM DRESSED GREEN, SHOWN ON THE PLANS mm x mm	NOMINAL SIZE TO BE SUBSTITUTED inch x inch
19x89	20x90	1x4
38x89	40x90	2x4
64x89	65x90	3x4
89x89	90x90	4x4
140x140	143x143	6x6
140x184	143x190	6x8
184x184	190x190	8x8
235x235	241x241	10x10
286x286	292x292	12x12

CONTRACT NO. 04-0120R4

CONTRACT CHANGE ORDER NO 43

SHEET 35 OF 58

SUBSTITUTION TABLE FOR NAILS AND SPIKES

METRIC COMMON NAIL, SHOWN ON THE PLANS Length, mm Diameter, mm	METRIC BOX NAIL, SHOWN ON THE PLANS Length, mm Diameter, mm	METRIC SPIKE, SHOWN ON THE PLANS Length, mm Diameter, mm	SIZE TO BE SUBSTITUTED Penny-weight
50.80 2.87	50.80 2.51	———	6d
63.50 3.33	63.50 2.87	———	8d
76.20 3.76	76.20 3.25	76.20 4.88	10d
82.55 3.76	82.55 3.25	82.55 4.88	12d
88.90 4.11	88.90 3.43	88.90 5.26	16d
101.60 4.88	101.60 3.76	101.60 5.72	20d
114.30 5.26	114.30 3.76	114.30 6.20	30d
127.00 5.72	127.00 4.11	127.00 6.68	40d
———	———	139.70 7.19	50d
———	———	152.40 7.19	60d

CONTRACT NO. 04-0120R4

CONTRACT CHANGE ORDER NO 73

SUBSTITUTION TABLE FOR IRRIGATION COMPONENTS

METRIC WATER METERS, TRUCK LOADING STANDPIPES, VALVES, BACKFLOW PREVENTERS, FLOW SENSORS, WYE STRAINERS, FILTER ASSEMBLY UNITS, PIPE SUPPLY LINES, AND PIPE IRRIGATION SUPPLY LINES SHOWN ON THE PLANS DIAMETER NOMINAL (DN) mm	NOMINAL SIZE TO BE SUBSTITUTED inch
15	1/2
20	3/4
25	1
32	1-1/4
40	1-1/2
50	2
65	2-1/2
75	3
100	4
150	6
200	8
250	10
300	12
350	14
400	16

Unless otherwise specified, substitutions of United States Standard Measures standard structural shapes corresponding to the metric designations shown on the plans and in conformance with the requirements in ASTM Designation: A 6/A 6M, Annex 2, will be allowed.

8-2.02 PORTLAND CEMENT CONCRETE

Portland cement concrete shall conform to the provisions in Section 90, "Portland Cement Concrete," of the Standard Specifications and these special provisions.

Cementitious material to be used in portland cement concrete shall conform to the provisions for cement and mineral admixtures in Section 90-2, "Materials," of the Standard Specifications, and shall be a combination of "Type II Modified" Portland cement and mineral admixture.

References to Section 90-2.01, "Portland Cement," of the Standard Specifications shall mean Section 90-2.01, "Cement," of the Standard Specifications.

Mineral admixture shall be combined with cement in conformance with the provisions in Section 90-4.08, "Required Use of Mineral Admixtures," of the Standard Specifications for the concrete materials specified in Section 56-2, "Roadside Signs," of the Standard Specifications.

The requirements of Section 90-4.08, "Required Use of Mineral Admixture," of the Standard Specifications shall not apply to Section 19-3.025C, "Soil Cement Bedding," of the Standard Specifications.

CONTRACT NO. 04-0120R4
CONTRACT CHANGE ORDER NO 73

The Department maintains a list of sources of fine and coarse aggregate that have been approved for use with a reduced amount of mineral admixture in the total amount of cementitious material to be used. A source of aggregate will be considered for addition to the approved list if the producer of the aggregate submits to the Transportation Laboratory certified test results from a qualified testing laboratory that verify the aggregate complies with the requirements. Prior to starting the testing, the aggregate test shall be registered with the Department. A registration number can be obtained by calling (916) 227-7228. The registration number shall be used as the identification for the aggregate sample in correspondence with the Department. Upon request, a split of the tested sample shall be provided to the Department. Approval of aggregate will depend upon compliance with the specifications, based on the certified test results submitted, together with any replicate testing the Department may elect to perform. Approval will expire 3 years from the date the most recent registered and evaluated sample was collected from the aggregate source.

Qualified testing laboratories shall conform to the following requirements:

A. Laboratories performing ASTM Designation: C 1293 shall participate in the Cement and Concrete Reference Laboratory (CCRL) Concrete Proficiency Sample Program and shall have received a score of 3 or better on all tests of the previous 2 sets of concrete samples.
B. Laboratories performing ASTM Designation: C 1260 shall participate in the Cement and Concrete Reference Laboratory (CCRL) Pozzolan Proficiency Sample Program and shall have received a score of 3 or better on the shrinkage and soundness tests of the previous 2 sets of pozzolan samples.

Aggregates on the list shall conform to one of the following requirements:

A. When the aggregate is tested in conformance with the requirements in California Test 554 and ASTM Designation: C 1293, the average expansion at one year shall be less than or equal to 0.040 percent; or
B. When the aggregate is tested in conformance with the requirements in California Test 554 and ASTM Designation: C 1260, the average of the expansion at 16 days shall be less than or equal to 0.15 percent.

The amounts of cement and mineral admixture used in cementitious material shall be sufficient to satisfy the minimum cementitious material content requirements specified in Section 90-1.01, "Description," or Section 90-4.05, "Optional Use of Chemical Admixtures," of the Standard Specifications and shall conform to the following:

A. The minimum amount of cement shall not be less than 75 percent by mass of the specified minimum cementitious material content.
B. The minimum amount of mineral admixture to be combined with cement shall be determined using one of the following criteria:

    1. When the calcium oxide content of a mineral admixture is equal to or less than 2 percent by mass, the amount of mineral admixture shall not be less than 15 percent by mass of the total amount of cementitious material to be used in the mix.
    2. When the calcium oxide content of a mineral admixture is greater than 2 percent by mass, and any of the aggregates used are not listed on the approved list as specified in

these special provisions, then the amount of mineral admixture shall not be less than 25 percent by mass of the total amount of cementitious material to be used in the mix.

3. When the calcium oxide content of a mineral admixture is greater than 2 percent by mass and the fine and coarse aggregates are listed on the approved list as specified in these special provisions, then the amount of mineral admixture shall not be less than 15 percent by mass of the total amount of cementitious material to be used in the mix.
4. When a mineral admixture that conforms to the provisions for silica fume in Section 90-2.04, "Admixture Materials," of the Standard Specifications is used, the amount of mineral admixture shall not be less than 10 percent by mass of the total amount of cementitious material to be used in the mix.
5. When a mineral admixture that conforms to the provisions for silica fume in Section 90-2.04, "Admixture Materials," of the Standard Specifications is used and the fine and coarse aggregates are listed on the approved list as specified in these special provisions, then the amount of mineral admixture shall not be less than 7 percent by mass of the total amount of cementitious material to be used in the mix.

C. The total amount of mineral admixture shall not exceed 35 percent by mass of the total amount of cementitious material to be used in the mix. Where Section 90-1.01, "Description," of the Standard Specifications specifies a maximum cementitious content in kilograms per cubic meter, the total mass of cement and mineral admixture per cubic meter shall not exceed the specified maximum cementitious material content.

8-2.03 CORROSION CONTROL FOR PORTLAND CEMENT CONCRETE

Permanent structures with portland cement concrete in contact with soil or rock including that utilized for cast-in-drilled-hole concrete piles, footings, retaining walls and columns, are considered to be in a corrosive environment and shall conform to the provisions in Section 90, "Portland Cement Concrete," of the Standard Specifications and these special provisions.

Cementitious material to be used in portland cement concrete shall conform to the provisions for cement and mineral admixtures in Section 90-2, "Materials," of the Standard Specifications, and shall be a combination of "Type II Modified" portland cement and mineral admixture.

Concrete in a corrosive environment shall contain not less than 400 kg of cementitous material per cubic meter.

No reduction in the cementitious material content specified or ordered, in conformance with the provisions in Section 90-4.05, "Optional Use of Chemical Admixtures," of the Standard Specifications, will be allowed for concrete in a corrosive environment.

Unless otherwise specified, for concrete in a corrosive environment, the amount of cement shall be 75 percent by mass, and the amount of mineral admixture to be combined with cement shall be 25 percent by mass, of the total amount of cementitious material to be used in the concrete mix. The calcium oxide content of mineral admixtures shall not exceed 10 percent.

Mineral admixture for concrete in a corrosive environment shall conform to ASTM Designation: C618 Class F or N.

The amount of free water used in concrete in a corrosive environment shall not exceed 160 kg/ m^3, plus 40 kg for each 100 kg of cementitious material in excess of 400 kg/ m^3.

Full compensation for conforming to the above requirements shall be considered as included in the contract prices paid for the various contract items of work and no additional compensation will be allowed therefor.

CONTRACT NO. 04-0120R4

CONTRACT CHANGE ORDER NO 73

SHEET 40 OF 280

SECTION 8-3. WELDING

8-3.01 WELDING

GENERAL

Flux core welding electrodes conforming to the requirements of AWS A5.20 E6XT-4 or E7XT-4 shall not be used to perform welding for this project.

Wherever reference is made to the following AWS welding codes in the Standard Specifications, on the plans, or in these special provisions, the year of adoption for these codes shall be as listed:

AWS Code	Year of Adoption
D1.1	2002
D1.4	1998
D1.5	2002
D1.6	1999

Requirements of the AWS welding codes shall apply unless specified otherwise in the Standard Specifications, on the plans, or in these special provisions. Wherever the abbreviation AWS is used, it shall be equivalent to the abbreviations ANSI/AWS or AASHTO/AWS.

Section 6.1.1.1 of AWS D1.5 is replaced with the following:

Quality Control (QC) shall be the responsibility of the Contractor. As a minimum, the Contractor shall perform inspection and testing of each weld joint prior to welding, during welding, and after welding as specified in this section and as necessary to ensure that materials and workmanship conform to the requirements of the contract documents.

Sections 6.1.3 through 6.1.4.3 of AWS D1.1, Section 7.1.2 of AWS D1.4, and Sections 6.1.1.2 through 6.1.3.3 of AWS D1.5 are replaced with the following:

The QC Inspector shall be the duly designated person who acts for and on behalf of the Contractor for inspection, testing, and quality related matters for all welding.

Quality Assurance (QA) is the prerogative of the Engineer. The QA Inspector is the duly designated person who acts for and on behalf of the Engineer.

The QC Inspector shall be responsible for quality control acceptance or rejection of materials and workmanship, and shall be currently certified as an AWS Certified Welding Inspector (CWI) in conformance with the requirements in AWS QC1, " Standard for AWS Certification of Welding Inspectors."

The QC Inspector may be assisted by an Assistant QC Inspector provided that this individual is currently certified as an AWS Certified Associate Welding Inspector (CAWI) in conformance with the requirements in AWS QC1, "Standard for AWS Certification of Welding Inspectors." The Assistant QC Inspector may perform inspection under the direct supervision of the QC Inspector provided the Assistant is always within visible and audible range of the QC Inspector. The QC Inspector shall be responsible for signing all reports and for determining if welded

CONTRACT NO. 04-0120R4
CONTRACT CHANGE ORDER NO 73
SHEET 41 OF 250

materials conform to workmanship and acceptance criteria. The ratio of QC Assistants to QC Inspectors shall not exceed 5 to 1.

When the term "Inspector" is used without further qualification, it shall refer to the QC Inspector.

Section 6.14.6, "Personnel Qualification," of AWS D1.1, Section 7.8, "Personnel Qualification," of AWS D1.4, and Section 6.1.3.4, "Personnel Qualification," of AWS D1.5 are replaced with the following:

Personnel performing nondestructive testing (NDT) shall be qualified and certified in conformance with the requirements of the American Society for Nondestructive Testing (ASNT) Recommended Practice No. SNT-TC-1A and the Written Practice of the NDT firm. The Written Practice of the NDT firm shall meet or exceed the guidelines of the ASNT Recommended Practice No. SNT-TC-1A. Individuals who perform NDT, review the results, and prepare the written reports shall be either:

A. Certified NDT Level II technicians, or;
B. Level III technicians who hold a current ASNT Level III certificate in that discipline and are authorized and certified to perform the work of Level II technicians.

Section 6.5.4 of AWS D1.5 is replaced with the following:

The QC Inspector shall inspect and approve each joint preparation, assembly practice, welding technique, joint fit-up, and the performance of each welder, welding operator, and tack welder to make certain that the applicable requirements of this code and the approved Welding Procedure Specification (WPS) are met. The QC Inspector shall examine the work to make certain that it meets the requirements of Sections 3 and 6.26. The size and contour of all welds shall be measured using suitable gages. Visual inspection for cracks in welds and base metal, and for other discontinuities should be aided by strong light magnifiers, or such other devices as may be helpful. Acceptance criteria different from those specified in this code may be used when approved by the Engineer.

Section 6.6.5, "Nonspecified NDT Other than Visual," of AWS D1.1, Section 6.6.5 of AWS D1.4 and Section 6.6.5 of AWS D1.5 shall not apply.

For any welding, the Engineer may direct the Contractor to perform NDT that is in addition to the visual inspection or NDT specified in the AWS or other specified welding codes, in the Standard Specifications, or in these special provisions. Additional NDT required by the Engineer will be paid for as extra work as provided in Section 4-1.03D, "Extra Work," of the Standard Specifications. Should any welding deficiencies be discovered by this additional NDT, all costs associated with the repair of the deficient area, including NDT of the weld and of the weld repair, and any delays caused by the repair, shall be at the Contractor's expense.

Repair work to correct welding deficiencies discovered by visual inspection or NDT, or by additional NDT directed or performed by the Engineer, and any associated delays or expenses caused to the Contractor by performing these repairs, shall be at the Contractor's expense.

The Engineer shall have the authority to verify the qualifications or certifications of any welder, QC Inspector, or NDT personnel to specified levels by retests or other means approved by the Engineer.

CONTRACT NO. 04-0120R4

CONTRACT CHANGE ORDER NO 73

Continuous inspection shall be provided when any welding is being performed. Continuous inspection, as a minimum, shall include having a QC Inspector within such close proximity of all welders or welding operators so that inspections by the QC Inspector of each welding operation at each welding location shall not lapse for a period exceeding 30 minutes.

Inspection and approval of all joint preparations, assembly practices, joint fit-ups, welding techniques, and the performance of each welder, welding operator, and tack welder shall be documented by the QC Inspector on a daily basis for each day welding is performed. For each inspection, including fit-up, Welding Procedure Specification (WPS) verification, and final weld inspection, the QC Inspector shall confirm and document compliance with the requirements of the AWS or other specified code criteria and the requirements of these special provisions on all welded joints before welding, during welding, and after the completion of each weld.

When joint weld details that are not prequalified to the details of Section 3 of AWS D1.1 or to the details of Figure 2.4 or 2.5 of AWS D1.5 are proposed for use in the work, the joint details, their intended locations, and the proposed welding parameters and essential variables, will be approved by the Engineer. The Engineer shall have 2 weeks to complete the review of the proposed joint detail locations. In the event the Engineer fails to complete the review within the time allowed, and if, in the opinion of the Engineer, completion of the work is delayed or interfered with by reason of the Engineer's delay in completing the review, the Contractor will be compensated for any resulting loss, and an extension of time will be granted, in the same manner as provided for in Section 8-1.09, "Right of Way Delays," of the Standard Specifications. Upon approval of the proposed joint detail locations and qualification of the proposed joint details, welders and welding operators using these details shall perform a qualification test plate using the WPS variables and the joint detail to be used in production. The test plate shall have the maximum thickness to be used in production and a minimum length of 180 mm and minimum finish welded width 460 mm. The test plate shall be mechanically and radiographically tested. Mechanical and radiographic testing and acceptance criteria shall be as specified in the applicable AWS codes.

In addition to the requirements specified in the applicable code, the period of effectiveness for a welder's or welding operator's qualification shall be a maximum of 3 years for the same weld process, welding position, and weld type. If production welding will be performed without gas shielding, then qualification shall also be without gas shielding. Excluding welding of fracture critical members, a valid qualification at the beginning of work on a contract will be acceptable for the entire period of the contract, as long as the welder's or welding operator's work remains satisfactory.

The Engineer will witness all qualification tests for WPSs that were not previously approved by the Department. An approved independent third party will witness the qualification tests for welders or welding operators. The independent third party shall be a current CWI and shall not be employed by the contractor performing the welding. The Engineer shall have 2 weeks to review the qualifications and copy of the current certification of the independent third party. In the event the Engineer fails to complete the review within the time allowed, and if, in the opinion of the Engineer, completion of the work is delayed or interfered with by reason of the Engineer's delay in completing the review, the Contractor will be compensated for any resulting loss, and an extension of time will be granted, in the same manner as provided for in Section 8-1.09, "Right of Way Delays," of the Standard Specifications. The Contractor shall notify the Engineer one week prior to performing any qualification tests. Witnessing of qualification tests by the Engineer shall not constitute approval of the intended joint locations, welding parameters, or essential variables.

In addition to the requirements of AWS D1.5 Section 5.12 or 5.13, welding procedures qualification, for work welded in conformance with that code, shall conform to the following requirements:

A. Unless considered prequalified, fillet welds, including reinforcing fillet welds, shall be qualified in each position. The fillet weld soundness test shall be conducted using the essential variables of the WPS as established by the Procedure Qualification Record (PQR.)
B. For qualification of joints that do not conform to Figures 2.4 and 2.5 of AWS D1.5, two WPS qualification tests are required. The tests conforming to AWS D1.5 Section 5.13 shall be conducted using both Figure 5.1 and Figure 5.3. The test conforming to Figure 5.3 shall be conducted using the same welding electrical parameters that were established for the test conducted conforming to Figure 5.1.
C. The travel speed, current, and voltage values that are used for tests conducted per AWS D1.5 Section 5.12 or 5.13 shall be consistent for each weld joint, and shall in no case vary by more than 10 percent for travel speed, 10 percent for current, and 7 percent for voltage.
D. For a WPS qualified in conformance with AWS D1.5 Section 5.13, the values to be used for calculating ranges for current and voltage shall be based on the average of all weld passes made in the test. Heat input shall be calculated using the average of current and voltage of all weld passes made in the test for a WPS qualified in conformance with Section 5.12 or 5.13.
E. To qualify for unlimited material thickness, two qualification tests are required for WPSs utilized for welding material thicknesses greater than 38 mm. One test shall be conducted using 20-mm thick test plates, and one test shall be conducted using test plates with a thickness between 38 mm and 50 mm. Two maximum heat input tests may be conducted for unlimited thickness qualification.
F. Macroetch tests are required for WPS qualification tests, and acceptance shall be per AWS D1.5 Section 5.19.3.
G. When a weld joint is to be made using a combination of qualified WPSs, each process shall be qualified separately.
H. When a weld joint is to be made using a combination of qualified and prequalified processes, the WPS shall reflect both processes and the limitations of essential variables, including weld bead placement, for both processes.
I. Prior to preparing mechanical test specimens, the PQR welds shall be inspected by visual and radiographic tests. Backing bar shall be 75 mm in width and shall remain in place during NDT testing. Results of the visual and radiographic tests shall comply with AWS D1.5 Section 6.26.2, excluding Section 6.26.2.2. Test plates that do not comply with both tests shall not be used.

WELDING QUALITY CONTROL

Welding quality control shall conform to the requirements in the AWS or other specified welding codes, the Standard Specifications, and these special provisions.

Unless otherwise specified, welding quality control shall apply when any work is welded in conformance with the provisions in Section 49, "Piling," Section 52, "Reinforcement,"

Section 55, "Steel Structures," or Section 75-1.035, "Bridge Joint Restrainer Units," of the Standard Specifications.

The welding of fracture critical members (FCMs) shall conform to the provisions specified in the Fracture Control Plan (FCP) and herein.

The Contractor shall designate in writing a welding Quality Control Manager (QCM). The QCM shall be responsible directly to the Contractor for the quality of welding, including materials and workmanship, performed by the Contractor and subcontractors.

The QCM shall be the sole individual responsible to the Contractor for submitting, receiving, reviewing, and approving all correspondence, required submittals, and reports to and from the Engineer. The QCM shall be a registered professional engineer or shall be currently certified as a CWI or a CAWI.

The QCM shall not be employed or compensated by any subcontractor, or by other persons or entities hired by subcontractors, who will provide other services or materials for the project. The QCM may be an employee of the Contractor.

Welding inspection personnel or NDT firms to be used in the work shall not be employed or compensated by any subcontractor, or by other persons or entities hired by subcontractors, who will provide other services or materials for the project, except for the following conditions:

A. The work is welded in conformance with AWS D1.5 and is performed at a permanent fabrication or manufacturing facility which is certified under the AISC Quality Certification Program, Category Cbr, Major Steel Bridges and Fracture Critical endorsement F.
B. The welding is performed on pipe pile material at a permanent pipe manufacturing facility authorized to apply the American Petroleum Institute (API) monogram for API 5L pipe.

For welding performed at such facilities, the inspection personnel or NDT firms may be employed or compensated by the facility performing the welding.

Prior to submitting the Welding Quality Control Plan (WQCP) required herein, a pre-welding meeting between the Engineer, the Contractor's QCM, and a representative from each entity performing welding or inspection for this project, shall be held to discuss the requirements for the WQCP.

The Contractor shall submit to the Engineer, in conformance with the provisions in "Working Drawings," of these special provisions, 2 copies of a separate WQCP for each subcontractor or supplier for each item of work for which welding is to be performed.

The Contractor shall allow the Engineer 2 weeks to review the WQCP submittal after a complete plan has been received. No welding shall be performed until the WQCP is approved in writing by the Engineer. In the event the Engineer fails to complete the review within the time allowed, and if, in the opinion of the Engineer, completion of the work is delayed or interfered with by reason of the Engineer's delay in completing the review, the Contractor will be compensated for any resulting loss, and an extension of time will be granted, in the same manner as provided for in Section 8-1.09, "Right of Way Delays," of the Standard Specifications.

An amended WQCP or any addendum to the approved WQCP shall be submitted to, and approved in writing by the Engineer, for proposed revisions to the approved WQCP. An amended WQCP or addendum will be required for revisions to the WQCP, including but not limited to a revised WPS; additional welders; changes in NDT firms, QC, or NDT personnel or procedures; or updated systems for tracking and identifying welds. The Engineer shall have

CONTRACT NO. 04-0120R4

CONTRACT CHANGE ORDER NO 73

SHEET 45 OF 283

1 week to complete the review of the amended WQCP or addendum. Work affected by the proposed revisions shall not be performed until the amended WQCP or addendum has been approved. In the event the Engineer fails to complete the review within the time allowed, and if, in the opinion of the Engineer, completion of the work is delayed or interfered with by reason of the Engineer's delay in completing the review, the Contractor will be compensated for any resulting loss, and an extension of time will be granted, in the same manner as provided for in Section 8-1.09, "Right of Way Delays," of the Standard Specifications.

Information regarding the contents, format, and organization of a WQCP, is available at the Transportation Laboratory or the following website:

http://www.dot.ca.gov/hq/esc/Translab/smbresources.htm

After final approval of the WQCP, amended WQCP, or addendum, the Contractor shall submit 7 copies to the Engineer of the approved documents. A copy of the Engineer approved document shall be available at each location where welding is to be performed.

A daily production log for welding shall be kept for each day that welding is performed. The log shall clearly indicate the locations of all welding. The log shall include the welders' names, amount of welding performed, any problems or deficiencies discovered, and any testing or repair work performed, at each location. The daily report from each QC Inspector shall also be included in the log.

The following items shall be included in a Welding Report that is to be submitted to the Engineer within 10 days following the performance of any welding:

A. Reports of all visual weld inspections and NDT.
B. Radiographs and radiographic reports, and other required NDT reports.
C. Documentation that the Contractor has evaluated all radiographs and other nondestructive tests and corrected all rejectable deficiencies, and all repaired welds have been reexamined by the required NDT and found acceptable.
D. Daily production log.

The following information shall be clearly written on the outside of radiographic envelopes: name of the QCM, name of the nondestructive testing firm, name of the radiographer, date, contract number, complete part description, and all included weld numbers or a report number, as detailed in the WQCP. In addition, all innerleaves shall have clearly written on them the part description and all included weld numbers, as detailed in the WQCP.

Reports regarding NDT shall be signed by both the NDT technician and the person that performed the review, and then submitted directly to the QCM for review and signature prior to submittal to the Engineer. Corresponding names shall be clearly printed or typewritten next to all signatures.

The Engineer will review the Welding Report to determine if the Contractor is in conformance with the WQCP. Unless otherwise specified, the Engineer shall be allowed 10 days to review the report and respond in writing after a complete Welding Report has been received. Prior to receiving notification from the Engineer of the Contractor's conformance with the WQCP, the Contractor may encase in concrete or cover welds for which a Welding Report has been submitted. However, should the Contractor elect to encase or cover those welds prior to receiving notification from the Engineer, it is expressly understood that the Contractor shall not be relieved of the responsibility for incorporating material in the work that conforms to the

requirements of the plans and specifications. Material not conforming to these requirements will be subject to rejection. Should the Contractor elect to wait to encase or cover welds pending notification by the Engineer, and in the event the Engineer fails to complete the review within the time allowed, and if, in the opinion of the Engineer, completion of the work is delayed or interfered with by reason of the Engineer's delay in completing the review, the Contractor will be compensated for any resulting loss, and an extension of time will be granted, in the same manner as provided for in Section 8-1.09, "Right of Way Delays," of the Standard Specifications.

The QC Inspector shall provide reports to the QCM on a daily basis for each day that welding is performed.

Except for noncritical weld repairs, the Engineer shall be notified immediately in writing when welding problems, deficiencies, base metal repairs, or any other type of repairs not submitted in the WQCP are discovered, and also of the proposed repair procedures to correct them. The Contractor shall allow the Engineer one week to review these procedures. No remedial work shall begin until the repair procedures are approved in writing by the Engineer. In the event the Engineer fails to complete the review within the time allowed, and if, in the opinion of the Engineer, completion of the work is delayed or interfered with by reason of the Engineer's delay in completing the review, the Contractor will be compensated for any resulting loss, and an extension of time will be granted, in the same manner as provided for in Section 8-1.09, "Right of Way Delays," of the Standard Specifications.

The QCM shall sign and furnish to the Engineer, a Certificate of Compliance in conformance with the provisions in Section 6-1.07, "Certificates of Compliance," of the Standard Specifications for each item of work for which welding was performed. The certificate shall state that all of the materials and workmanship incorporated in the work, and all required tests and inspections of this work, have been performed in conformance with the details shown on the plans, the Standard Specifications, and these special provisions.

PAYMENT

Full compensation for conforming to the requirements of "Welding" shall be considered as included in the contract prices paid for the various items of work involved and no additional compensation will be allowed therefor.

SECTION 9. DESCRIPTION OF BRIDGE WORK

The bridge work to be done consists, in general, of constructing portions of the following structures as shown on the plans:

SAN FRANCISCO OAKLAND BAY BRIDGE EAST SPAN
YBI TRANSITION STRUCTURES
SUBSTRUCTURE ONLY
(Bridge No. 34-0006 L/R)

SAN FRANCISCO OAKLAND BAY BRIDGE EAST SPAN
YBI EB ON-RAMP STRUCTURE (INITIAL)
SUBSTRUCTURE FOR BENT W7 ONLY
(Bridge No. 34-0006 R)

CONTRACT NO. 04-0120R4
CONTRACT CHANGE ORDER NO 73

Partial payment for the item of water pollution control will not be made until the Water Pollution Control Cost Break-Down is approved by the Engineer.

Line items indicated in the Water Pollution Control Cost Break-Down in this section with a specified Estimated Quantity shall be considered "Project-Specific Minimum Requirements." The Contractor shall incorporate Project-Specific Minimum Requirements with Contractor-designated quantities and values into the Water Pollution Control Cost Break-Down submitted with the SWPPP amendment.

Line items indicated in the Water Pollution Control Cost Break-Down in this section without a specified Estimated Quantity shall be considered by the Contractor for selection to meet the applicable "Minimum Requirements" as defined in the Manuals, or for other water pollution control work as identified in the "Construction Site BMPs Consideration Checklist" presented in the Preparation Manual. In the Water Pollution Control Cost Break-Down submitted with the SWPPP amendment, the Contractor shall list only those water pollution control practices selected for this Contract Change Order , including quantities and values required to complete the work for those items.

The sum of the amounts for the items of work listed in the Water Pollution Control Cost Break-Down shall be equal to the contract lump sum price bid for water pollution control. Overhead and profit, shall be included in the individual items listed in the cost break-down.

WATER POLLUTION CONTROL COST BREAK-DOWN

(CCO No. 64)

ITEM	ITEM DESCRIPTION	UNIT	ESTIMATED QUANTITY	VALUE	AMOUNT
SS-8	Wood Mulching	M2			
SS-9	Earth Dikes/Drainage Swales & Lined Ditches	M			
SS-10	Outlet Protection/Velocity Dissipation Devices	EA			
SS-11	Slope Drains	M			
SC-7	Street Sweeping and Vacuuming	LS			
WE-1	Wind Erosion Control	LS			
NS-3	Paving and Grinding Operations	LS			
NS-6	Illicit Connection/Illegal Discharge Detection and Reporting	LS			
NS-8	Vehicle and Equipment Cleaning	LS			
NS-9	Vehicle and Equipment Fueling	LS			
NS-10	Vehicle and Equipment Maintenance	LS			
WM-1	Material Delivery and Storage	LS			
WM-2	Material Use	LS			
WM-4	Spill Prevention and Control	LS			
WM-5	Solid Waste Management	LS			

ITEM	ITEM DESCRIPTION	UNIT	ESTIMATED QUANTITY	VALUE	AMOUNT
WM-6	Hazardous Waste Management	LS			
WM-9	Sanitary/Septic Waste Management	LS			

TOTAL _____

Adjustments in the items of work and quantities listed in the approved cost break-down shall be made when required to address amendments to the SWPPP, except when the adjusted items are paid for as extra work.

No adjustment in compensation will be made to the contract lump sum price paid for water pollution control due to differences between the quantities shown in the approved cost break-down and the quantities required to complete the work as shown on the approved SWPPP amendment. No adjustment in compensation will be made for ordered changes to correct SWPPP work resulting from the Contractor's own operations or from the Contractor's negligence.

The approved cost break-down will be used to determine partial payments during the progress of the work and as the basis for calculating the adjustment in compensation for the item of water pollution control due to increases or decreases of quantities ordered by the Engineer. When an ordered change increases or decreases the quantities of an approved cost break-down item, the adjustment in compensation will be determined in the same manner specified for increases and decreases in the quantity of a contract item of work in conformance with the provisions in Section 4-1.03B, "Increased or Decreased Quantities," of the Standard Specifications. If an ordered change requires a new item which is not on the approved cost break-down, the adjustment in compensation will be determined in the same manner specified for extra work in conformance with Section 4-1.03D, "Extra Work," of the Standard Specifications.

If requested by the Contractor and approved by the Engineer, changes to the water pollution control practices listed in the approved cost break-down, including addition of new water pollution control practices, will be allowed. Changes shall be included in the approved amendment of the SWPPP. If the requested changes result in a net cost increase to the lump sum price for water pollution control, an adjustment in compensation will be made without change to the water pollution control item. The net cost increase to the water pollution control item will be paid for as extra work as provided in Section 4-1.03D, "Extra Work," of the Standard Specifications.

PAYMENT

The contract lump sum price paid for prepare storm water pollution prevention plan amendment shall include full compensation for furnishing all labor, materials, tools, equipment, and incidentals for doing all the work involved in developing, preparing, obtaining approval of, revising, and amending the SWPPP, as specified in the Standard Specifications and these special provisions, and as directed by the Engineer.

Attention is directed to Section 9-1.06, "Partial Payments," and Section 9-1.07, "Payment After Acceptance," of the Standard Specifications. Payments for prepare storm water pollution prevention plan will be made as follows:

A. After the SWPPP Amendment has been approved by the Engineer, 75 percent of the contract item price for prepare storm water pollution prevention plan will be included in the monthly partial payment estimate.
B. After acceptance of the contract in conformance with the provisions in Section 7-1.17, "Acceptance of Contract," of the Standard Specifications, payment for the remaining 25 percent of the contract item price for prepare storm water pollution prevention plan amendment will be made in conformance with the provisions in Section 9-1.07.

The contract lump sum price paid for water pollution control shall include full compensation for furnishing all labor, materials, tools, equipment, and incidentals, and for doing all the work involved in installing, constructing, removing, and disposing of water pollution control practices, including non-storm water management, and waste management and materials pollution water pollution control practices, except those for which there is a contract item of work as specified in the Standard Specifications and these special provisions, and as directed by the Engineer.

Storm water sampling and analysis will be paid for as extra work as provided in Section 4-1.03D, "Extra Work," of the Standard Specifications. No payment will be made for the preparation, collection, analysis, and reporting of storm water samples required where appropriate BMPs are not implemented prior to a rain event, or if a failure of a BMP is not corrected prior to a rain event.

For items identified on the approved Water Pollution Control Cost Break-Down, the cost of maintaining the temporary water pollution control practices shall be divided equally by the State and the Contractor as follows:

Soil Stabilization

Temporary water pollution control practices except:
SS-1 Scheduling
SS-2 Preservation of Existing Vegetation

Sediment Control

Temporary water pollution control practices except:
SC-7 Street Sweeping and Vacuuming

Wind Erosion Control

No sharing of maintenance costs will be allowed.

Tracking Control

No sharing of maintenance costs will be allowed.

Non-Storm Water Management

No sharing of maintenance costs will be allowed.

Waste Management & Materials Pollution Control

No sharing of maintenance costs will be allowed.

CONTRACT NO. 04-0120R4
CONTRACT CHANGE ORDER NO 73
SHEET 50 OF 59

The division of cost will be made by determining the cost of maintaining water pollution control practices in conformance with the provisions in Section 9-1.03, "Force Account Payment," of the Standard Specifications and paying to the Contractor one-half of that cost. Cleanup, repair, removal, disposal, improper installation, and replacement of water pollution control practices damaged by the Contractor's negligence, shall not be considered as included in the cost for performing maintenance.

The provisions for sharing maintenance costs shall not relieve the Contractor from the responsibility for providing appropriate maintenance on items with no shared maintenance costs.

Full compensation for non-shared maintenance costs of water pollution control practices, as specified in this section, "Water Pollution Control," shall be considered as included in the contract lump sum price paid for water pollution control and no additional compensation will be allowed therefor.

Water pollution control practices for which there is a contract item of work, will be measured and paid for as that contract item of work.

10-1.03 NON-STORM WATER DISCHARGES

Non-storm water discharges shall conform to the requirements in Section 7-1.01G, "Water Pollution" of the Standard Specifications, "Water Pollution Control" of these special provisions, and these special provisions.

MARINE EXCAVATION DEWATERING

The discharge of floating oil or other floating materials is prohibited. Suspended solids shall be removed to the extent that deleterious bottom deposits, turbidity, and discoloration are not caused by the discharge. Turbidity shall be measured in Nephelometric Turbidity Units (NTU). The point of effluent discharge shall not cause bottom sediments or aquatic vegetation to become dislodged or disturbed.

The Contractor shall describe dewatering operation in the Dewatering Plan as specified under "Land-Based Excavation Dewatering."

The Contractor shall monitor both the discharge and the receiving water body in conformance with the provisions in Order No. R2-2002-0011, "Waste Discharge Requirements for San Francisco-Oakland Bay Bridge East Span Seismic Safety Project (East Span Project), City and County of San Francisco and City of Oakland, Alameda County," issued by the San Francisco Bay Regional Water Quality Control Board and these special provisions. Copies of the permit are available for inspection at the Department of Transportation, Duty Senior's Desk, 111 Grand Avenue, Oakland, California, email; duty_senior_district04@dot.ca.gov, telephone (510) 286-5209 The observations made during monitoring shall include the color difference, presence of suspended material, presence of water fowl or aquatic wildlife, wind direction and velocity, tidal condition, atmospheric condition, time, and date. In addition, the Contractor shall supplement the observations with photographs. During monitoring events, the Contractor shall obtain depth-averaged turbidity, dissolved oxygen, and pH measurements for the discharge and receiving water. Depth-averaged measurements shall be obtained by taking measurements from 3 points within the water column and averaging the 3 measurements: one at 0.3 m below the surface, one at mid depth, and one at 0.3 m above the bottom. In receiving waters that are less than 1.0 meter in depth, only one measurement shall be taken at 0.3 m below the surface. All field recorded data shall be obtained and recorded in the presence of the Engineer. Only meters that are approved by the Engineer shall be used for obtaining field measurements. The

Contractor shall submit a copy of the manufacturer specifications for all measuring instruments used including the operating instructions, the calibration instructions and calibration log. All calibrations shall be done in accordance with the manufacturer's instructions and in the presence of the Engineer.

The Contractor shall conduct monitoring, at a minimum, one hour before discharge, ten minutes after initiating discharge, four hours after initiating discharge, once daily after the initial startup monitoring, and upon cessation of discharge. The receiving water turbidity, dissolved oxygen, and pH shall be measured at a location that is unaffected by the discharge at the same frequency as the discharge monitoring. The observations, turbidity, dissolved oxygen, and pH measurements shall be recorded daily in a tabular format provided within the Storm Water Pollution Prevention Plan, as described within "Water Pollution Control" of these special provisions. The daily report shall include photographs and shall be provided daily to the Engineer prior to close of business for each working day.

The following increases in natural background turbidity, pH, and dissolved oxygen of the receiving water will be allowed:

Water Quality Parameter	Water Quality Limit
Natural Background Turbidity	
0 to 49 NTU	Receiving water turbidity may be increased to 50 NTU
50 NTU and greater	10 percent incremental increase
Natural background pH	± 0.5 pH units
Natural Background Dissolved Oxygen	5 mg/L minimum

In the event that observations and measurements indicate that a discharge is having an effect on receiving water by more than allowed and the effect is confirmed by an additional measurement obtained no less than 15 minutes and no more than 1 hour after the initial measurement, the discharge activity shall immediately cease, and corrective actions undertaken to modify, repair, or replace the equipment used for the discharge. The resumption of discharge activities will be allowed upon approval of the corrective measures by the Engineer.

LAND-BASED EXCAVATION DEWATERING

This work shall include discharging water from land-based excavations including, but not limited to, excavations for pile caps or footings, piles, storm drainage systems, sanitary sewer systems, utility facilities, walls and appurtenances. These provisions shall not apply to seepage from seasonal percolation of rainwater at elevations greater than 6.0 m, except that those dewatering operations shall be described in the Dewatering Plan as specified herein. Discharges from elevations greater than 6.0 m shall be performed in conformance with Order No. R2-2002-0011, including allowable increases in natural background turbidity, pH, and dissolved oxygen, and "Water Pollution Control" of these special provisions.

Excavation dewatering shall be performed in conformance with the requirements of San Francisco - Public Utilities Commission (SF-PUC) Batch Discharge Permit and Authorization Letter issued on October 5, 2004.

The Contractor shall be fully informed of the provisions of the permit and conduct the work accordingly.

At the option of the Contractor, water removed from the excavation may be hauled off site to an appropriately licensed liquid disposal facility in accordance with Section 7-1.13, "Disposal of Material Outside the Highway Right of Way," of the Standard Specifications.

Surface runoff shall not be allowed to enter the excavation. Groundwater contaminated by the Contractor's operations, such as the use of slurry to construct cast-in-place piles, shall be treated to meet the permit requirements for discharge or removed from the site to an appropriately licensed liquid disposal facility in accordance with Section 7-1.13, "Disposal of Material Outside the Highway Right of Way," of the Standard Specifications.

Based on the material type and groundwater gradients within the project limits, it is expected that the groundwater flow rate will be up to 180.0 L/minute. The treatment facility shall be designed to accommodate this flow rate. Continuous pumping from well points outside the excavations will not be allowed. The Contractor shall use construction methods that prevent cross-contamination of water-bearing zones caused by the flow of contaminated groundwater into piling excavations including, but not limited to, sheet piling, pipe pile extensions, and casing or shells. Seal course and cofferdams shall be used to control water in conformance with the provisions of Section 19-3.04, "Water Control and Foundation Treatment," of the Standard Specifications from "WD1" 52+40 to "WD1" 54+80 when groundwater is to be encountered. A meter that has been approved by the Engineer shall be used to measure all excavation discharges.

Treated groundwater shall be used for dust control up to the extent that sheet flow or ponding becomes imminent. When further use of the treated water as dust control would result in sheet flow or ponding, the water shall be discharged at an approved dedicated discharge point.

Analysis results of grab samples from groundwater within the limits of the project are summarized in the following table:

CONTRACT NO. 04-0120R4
CONTRACT CHANGE ORDER NO 73
SHEET 53 OF 280

GROUNDWATER CONTAMINANT SUMMARY

Sample ID,	W5LC	EB6R	EB7R
Metals			
Antimony	0.010		
Arsenic	0.22		
Barium	2.5		
Beryllium	<0.0030		
Cadmium	<0.0030		
Chromium	1.2		
Cobalt	0.34		
Copper	0.27		
Lead	0.10		
Mercury	<0.0040		
Molybdenum	<0.0050		
Nickel	1.4		
Selenium	<0.0050		
Silver	<0.0030		
Thallium	<0.0050		
Vanadium	0.66		
Zinc	0.71		
VOCs	Benzene = 0.00088 M,p-Xylene = 0.00080 o-Xylene = 0.0016 1,2,4-Trimethyl-benzene = 0.0063 Naphthalene = 0.039	< 0.005	< 0.005
SVOCs	2-Methyl-naphthalene = 0.068 Fluorene = 0.011 Naphthalene = 0.031 Phenanthrene = 0.011	ND	ND
TPHg	0.57	< 0.050	0.12
TPHd	13	160	1200
TPHmo	9.1		

CONTRACT NO. 04-0120R4
CONTRACT CHANGE ORDER NO 73

GROUNDWATER CONTAMINANT SUMMARY (CONT.)

Sample ID.	EB8L	EB9L	EB10R	EB13L	EB14R
Metals					
Antimony				0.0093	0.010
Arsenic				0.010	0.030
Barium				0.67	1.1
Beryllium				<0.0010	<0.0010
Cadmium				<0.0030	<0.0030
Chromium				<0.0030	0.050
Cobalt				0.0036	0.010
Copper				0.040	0.29
Lead				0.14	4.1
Mercury				<0.0040	<0.0040
Molybdenum				0.010	0.010
Nickel				<0.0030	0.040
Selenium				0.0079	0.0060
Silver				0.0096	0.010
Thallium				<0.0050	<0.0050
Vanadium				0.0041	0.040
Zinc				0.21	2.4
VOCs	< 5.0			<0.005	< 0.005
SVOCs	2-Methyl-naphthalene = 13 Phenanthrene = 12	ND	ND	Phenanthrene = .093	ND
TPHg	0.3			0.33	0.48
TPHd	44	3.1	5.6	36	440
TPHmo					

Notes:
Concentrations are shown in milligrams per liter.
Sample locations are shown in the "Materials Information"
When no concentration is given, samples were not analyzed for that group of contaminants.
Abbreviations:
ND Not detected above laboratory reporting limit
VOCs Volatile Organic Compounds
SVOCs Semi-Volatile Organic Compounds
TPHg Total Petroleum Hydrocarbons as gasoline
TPHd Total Petroleum Hydrocarbons as diesel
TPHmo Total Petroleum Hydrocarbons as motor oil

The Contractor shall submit to the Engineer, as specified in "Working Drawing," of these special provisions, a Dewatering Plan that includes the following:

A. Dewatering Operation Description - written description of all dewatering operations that shall include, but is not limited to, start up date of discharge, an estimate of the discharge volume, flow rate, frequency, and maximum capacity of the treatment facility.
B. Certification of Treatment Facility Design - report describing the adequacy of (1) the process and design of the treatment facility to meet treatment objectives, (2) the startup and operation instruction manuals, (3) the treatment facility maintenance and testing program; and (4) the influent and effluent sampling locations. This certification shall be prepared and signed by an engineer who is registered as a Civil Engineer in the State of California.

CONTRACT NO. 04-0120R4
CONTRACT CHANGE ORDER NO 73
SHEET 55 OF 264

C. Treatment Facility Operation and Maintenance Manual - manual of operation for the treatment facility that describes staffing and training, quality control and assurance, inspection and maintenance, monitoring, records keeping, and preventative and contingency plans for controlling accidental discharges.
D. Working Drawings - working drawings of dewatering operations showing both a sectional and plan view that details the removal techniques for suspended solids and known or introduced groundwater contaminants. The drawings shall define the flow path and placement of pipes, hoses, pumps, treatment systems, holding tanks, and other equipment used to convey the discharge; the general position of the dewatering measures relative to the excavations undergoing dewatering; and the point of effluent discharge.

The plan shall be submitted 25 working days before beginning dewatering operations for review and approval by the Engineer. Excavation operations that require dewatering will not be allowed until the plan has been approved by the Engineer. At the time of approval, the Contractor shall incorporate the dewatering plan into the approved SWPPP via the established amendment process as described within "Water Pollution Control" of these special provisions.

Monitoring of discharges shall conform to the requirements of the SF-PUC Batch Discharge Permit and Authorization Letter and these special provisions.

In addition to the monitoring requirements of the SF-PUC Batch Discharge Permit and Authorization Letter, the Contractor shall monitor the discharge for turbidity. Turbidity shall be measured in Nephelometric Turbidity Units (NTU).

In the event of a violation of the maximum daily limits or turbidity measurement greater than 50 NTU occurs and is confirmed by an additional measurement obtained no less than 15 minutes and no more than 1 hour after the initial measurement, the discharge activity shall be shutdown and corrective actions shall be taken to modify, repair, or replace the equipment used for the discharge. The resumption of discharge activities shall be allowed upon approval of the corrective measures by the Engineer.

EFFLUENT TREATMENT FACILITY

An effluent treatment facility shall be provided to treat petroleum contaminated water discharged from dewatering operations. Effluent shall be considered as the water and any other material discharged from the dewatering operations.

The Contractor shall use the effluent treatment facility to treat water from excavations before discharging to an approved discharge site in accordance with the SF-PUC Batch Discharge Permit and Authorization Letter and these special provisions.

Materials shall conform to the provisions in Section 6, "Control of Materials," Section 7-1.16, "Contractor's Responsibility for the Work and Materials," Section 20-5.03E, "Pipe," and Section 74-2, "Drainage Pump Equipment" of the Standard Specifications and these special provisions.

Holding tanks for pretreatment storage shall be transportable and totally enclosed, with a minimum holding capacity sufficient to prevent delay of other work and capable of connecting multiple tanks in series. Holding tanks shall have an inlet and outlet capable of receiving and discharging minimum flows, at a rate sufficient to reach the treatment goals. Holding tanks shall be able to accommodate temporary installation of submersible pumps. All tanks shall remain within the project limits until dewatering operations are no longer necessary as determined by the Engineer.

CONTRACT NO. 04-0120R4
CONTRACT CHANGE ORDER NO 73

Granulated activated carbon (GAC) shall be used as the medium to treat groundwater contaminated with petroleum hydrocarbons as noted in the contaminant summary table. The GAC treatment system shall be designed to meet the treatment goals specified in the SF-PUC Batch Discharge Permit and Authorization Letter. The GAC treatment vessels shall be readily removed and replaced or interchanged when required. The GAC treatment system shall have appropriate fittings for pipe connections designed to accommodate the required flow rate. Throughout the operation, the Contractor shall have additional GAC treatment vessels available for transport and use at the site if the monitoring results indicate that the GAC treatment vessels currently in use will not continue to meet the treatment goals of the SF-PUC Batch Discharge Permit and Authorization Letter. Pretreatment of the groundwater to prevent sediment build up within the GAC treatment vessels shall be provided when necessary.

Sampling ports shall be spigots attached to the piping system and capable of obtaining a representative sample of water at locations within the effluent treatment facility where constituent concentrations are needed to ensure compliance with the SF-PUC Batch Discharge Permit and Authorization Letter and to inspect the efficiency of the facility. The effluent treatment facility shall be capable of sustaining temporary fluctuations in water pressure due to monitoring activities.

Pumps shall be capable of being submerged in water and discharging water and other materials including, but not limited to small rocks, gravel, sand and sediments. The submersible pumps shall be capable, at all times, of discharging at a flow rate that will match the flow rate through the GAC vessels. An additional submersible pump shall be provided by the Contractor that is capable of discharging treated effluent from a temporary holding container to the dedicated discharge location.

The Contractor shall be responsible for providing and installing all piping required to circulate the effluent through the treatment facility and all piping required to convey the treated effluent from the temporary holding container to the point of release at the dedicated discharge location.

A holding tank shall be provided between the GAC treatment system outlet and the discharge location with a minimum storage capacity of 1800 L. The holding container shall have an inlet and outlet capable of receiving and discharging minimum flows that can match the flow rate through the GAC vessels. The holding container shall be open to the air and sealed on all sides and the bottom to prevent any leakage.

Sediments removed during maintenance of the treatment facility shall be characterized by laboratory analysis before disposal. Contaminated sediments shall be removed from the site to an appropriately licensed waste management facility in accordance with Section 7-1.13, "Disposal of Material Outside the Highway Right of Way," of the Standard Specifications. Disposal of contaminated sediments, as determined by analysis, will be paid for as extra work as provided in Section 4-1.03D of the Standard Specifications.

INSPECTION

The Contractor shall conduct a daily inspection of the dewatering equipment, when in use, and ensure that all components are functional and routinely maintained to prevent leakage before removal of suspended solids and petroleum hydrocarbons. If any component of the dewatering equipment is damaged so that the performance of the equipment is diminished below allowable operational levels, the dewatering operation shall be discontinued and the component shall be repaired or replaced with substitute equipment.

CONTRACT NO. 04-0120R4

CONTRACT CHANGE ORDER NO 73

SHEET 57 OF 280

SPILL CONTINGENCY

The Contractor shall prepare and submit to the Engineer a contingency plan for the management of spills or leaks of any materials or wastes that may impact the water quality of the San Francisco Bay.

The spill contingency plan shall be incorporated within the SWPPP, as specified in "Water Pollution Control (Storm Water Pollution Prevention Plan)" of these special provisions.

The contingency plan shall include instructions and procedures for reporting spills, and a list of spill containment and collection materials and equipment to be maintained onsite. The contingency plan shall be reviewed and updated quarterly.

LIQUIDS, RESIDUES AND DEBRIS

The Contractor shall prevent the discharge of slurries, liquids, residues, or debris produced during the work to storm water facilities or surface waters of the State. The SWPPP shall, at a minimum, depict and describe the procedural and structural methods of containing, collecting, and disposing of all slurries, liquids, residues, and debris associated with the operations. Sufficient redundancy shall be incorporated into the procedural and structural methods such that the slurries, liquids, residues, and debris are not conveyed into or become present in drainage systems, San Francisco Bay, or other water bodies.

PAYMENT

The contract lump sum price paid for non-storm water discharges shall include full compensation for furnishing all labor, materials, tools, equipment, and incidentals and for doing all the work involved in non-storm water discharges, complete in place, as shown on the plans, as specified in the Standard Specifications, and these special provisions, and as directed by the Engineer.

10-1.04 TEMPORARY DRAINAGE INLET PROTECTION

Temporary drainage inlet protection shall be constructed, maintained, and removed from all drainage inlets exposed to construction activity and at the locations shown on the approved Storm Water Pollution Prevention Plan (SWPPP) in accordance with "Water Pollution Control" of these special provisions, and in accordance with the details shown on the plans and these special provisions.

Temporary drainage inlet protection shall be one of the water pollution control practices for sediment control. The amendment to the SWPPP shall include the use of temporary drainage inlet protection.

The Contractor shall select the appropriate drainage inlet protection in accordance with the details to meet the conditions around the drainage inlet. Throughout the duration of the contract, the Contractor shall provide protection to meet the changing conditions around the drainage inlet.

Temporary drainage inlet protection shall be Type 1,3A,3B,4A,4B or 5.

CONTRACT NO. 04-0120R4

CONTRACT CHANGE ORDER NO 73

SHEET 55 OF 130

MATERIALS

Erosion Control Blanket

The erosion control blanket shall be a rolled erosion control product (RECP) and shall be classified either as temporary and degradable or long-term and nondegradable, and shall conform to one of the following:

A. Temporary and degradable:

1. Machine produced mats consisting of curled wood excelsior with 80 percent of the fiber 150 mm or longer. The excelsior blanket shall be of consistent thickness with wood fiber evenly distributed over the entire area of the blanket. The top surface of the blanket shall be covered with an extruded photodegradable plastic netting or lightweight nonsynthetic netting. The blanket shall be smolder resistant without the use of chemical additives and shall be nontoxic and noninjurious to plant and animal life. The excelsior blanket shall be furnished in rolled strips with a minimum mass per unit area of 0.40-kg/m^2.
2. Machine produced mats consisting of 70 percent straw and 30 percent coconut fiber with an extruded photodegradable plastic netting or lightweight nonsynthetic netting on the top and bottom surfaces of the blanket. The straw and coconut shall adhere to the netting using thread or glue strip. The straw and coconut blanket shall be of consistent thickness, and straw and coconut fiber shall be evenly distributed over the entire area of the blanket. The straw and coconut fiber blanket shall be furnished in rolled strips with a minimum mass per unit area of 0.27-kg/m^2.
3. Machine produced mats that are 100 percent coir consisting of coconut fiber with an extruded photodegradable plastic netting or lightweight nonsynthetic netting on the top and bottom surfaces of the blanket. The coconut fiber shall adhere to the netting using thread or glue strip. The coconut blanket shall be of consistent thickness, with coconut fiber evenly distributed over the entire area of the blanket. The coconut fiber blanket shall be furnished in rolled strips with a minimum mass per unit area of 0.27-kg/m^2.
4. Machine woven netting that is 100 percent spun coir consisting of coconut fiber with an average open area of 63 percent to 70 percent. Coconut coir netting shall be furnished in rolled strips with a minimum mass per unit area of 0.40-kg/m^2.

B. Long-term and nondegradable:

1. Geotextile blanket shall conform to the provisions for rock slope protection fabric (Type A) in Section 88-1.04, "Rock Slope Protection Fabric," of the Standard Specifications.

Staples

Staples shall be as shown on the plans. An alternative attachment device such as geotextile pins or plastic pegs may be used instead of staples. The Contractor shall submit a sample of the alternative attachment device for the Engineer's approval before installation.

CONTRACT NO. 04-0120R4
CONTRACT CHANGE ORDER NO 73
SHEET 59 OF 89

Rocks

Rocks shall conform to the requirements in Section 72-2.02, "Materials," of the Standard Specifications except that grading shall conform to the following sizes:

Square Screen Size (mm)	Percentage Passing	Percentage Retained
150	100	0
75	0	100

Fiber Roll

A fiber roll shall be one of the following:

A. Constructed with a premanufactured blanket made of one material or a combination of materials consisting of wood excelsior, rice or wheat straw, or coconut fibers. The blanket shall be between 2.0 m and 2.4 m in width and between 20 m and 29 m in length. Wood excelsior shall be individual fibers, of which 80 percent shall be 150 mm or longer in length. The blanket shall have a photodegradable plastic netting or biodegradable jute, sisal, or coir fiber netting on at least one side. The blanket shall be rolled along the width and secured with jute twine spaced 2 m apart along the full length of the roll and placed 150 mm from the ends of each roll. The finished roll shall be between 200 mm and 250 mm in diameter, between 3 m and 6 m in length, and shall weigh at least 0.81-kg/m. More than one blanket may be required to achieve the finished roll diameter. When more than one blanket is required, blankets shall be jointed longitudinally with an overlap of 150 mm along the length of the blanket.

B. A premanufactured roll of rice or wheat straw, wood excelsior, or coconut fiber encapsulated within a photodegradable plastic or biodegradable jute, sisal, or coir fiber netting. The rolls shall be between 200 mm and 250 mm in diameter, between 3 m and 6 m in length, and shall weigh at least 1.6 kg/m. The netting shall have a minimum durability of one year after installation. The netting shall be secured tightly at each end of the roll.

Wood Stakes

Wood stakes shall be a minimum of 19 mm x 19 mm x 450 mm in size for Type 1 installation, or shall be a minimum of 19 mm x 38 mm x 450 mm in size for Type 2 installation. Wood stakes shall be untreated fir, redwood, cedar, or pine and cut from sound timber. They shall be straight and free of loose or unsound knots and other defects which would render them unfit for the purpose intended.

Rope

Rope shall be biodegradable, such as sisal or manila, with a minimum diameter of 6.35 mm.

Gravel-filled Bags

Gravel-filled bag fabric shall be nonwoven polypropylene geotextile or polymer material and shall conform to the following requirements:

Specification	Requirements
Mass per unit area, grams per square meter, minimum. ASTM Designation: D 5261	270
Grab tensile strength (25-mm grip), kilonewtons, minimum. ASTM Designation: D4632*	0.89
Ultraviolet stability, percent tensile strength retained after 500 hours, ASTM Designation: D4355, xenon arc lamp method	70

* or appropriate test method for specific polymer

Gravel-filled bags shall be between 600 mm and 800 mm in length, and between 400 mm and 500 mm in width.

Yarn used for binding gravel bags shall be as recommended by the manufacturer or bag supplier and shall be of a contrasting color.

Gravel shall be between 10 mm and 20 mm in diameter, and shall be clean and free from clay balls, organic matter, and other deleterious materials. The opening of gravel-filled bags shall be secured to prevent gravel from escaping. Gravel-filled bags shall be between 13 kg and 22 kg in mass.

Silt Fence

At the Contractor's option, temporary silt fence shall be prefabricated or constructed with silt fence fabric, posts, and fasteners.

Silt fence fabric shall conform to the following requirements:

Specification	Requirements
Width, mm, min.	900
Grab tensile strength (25-mm grip), kilonewtons, minimum. in each direction ASTM Designation: D 4632 or appropriate test method for specific polymer	0.55
Elongation, percent minimum in each direction ASTM Designation: D 4632 or appropriate test method for specific polymer	15
Permittivity, 1/sec., minimum. ASTM Designation: D 4491	1.5
Flow rate, liters per minute per square meter, minimum. ASTM Designation: D 4491	400
Ultraviolet stability, percent tensile strength retained after 500 hours, minimum. ASTM Designation: D 4355 (xenon-arc lamp and water spray weathering method)	70

Silt fence fabric shall be geotextile manufactured from woven polypropylene or polymer material. Silt fence fabric may be made of recycled materials. No materials shall contain biodegradable filler materials that can degrade the physical or chemical characteristics of the finished fabric. The Engineer may order tests to confirm the absence of biodegradable filler materials in conformance to the requirements in ASTM Designation: E 204.

Posts for temporary silt fences shall be one of the following:

A. Posts shall be untreated fir, redwood, cedar, or pine, shall be cut from sound timber, and shall be straight and free of loose or unsound knots and other defects which would render them unfit for the purpose intended. Wood post shall be a minimum of 34 mm x 40 mm in size, and 4 feet in length. The end of the post to be embedded in the soil shall be pointed.

CONTRACT NO. 04-0120R4

CONTRACT CHANGE ORDER NO 73

B. Posts shall be steel and have a "U," "T," "L," or other cross sectional shape that can resist failure from lateral loads. The steel posts shall have a minimum mass per length of 1.1 kg/m and a minimum length of 1.2 m. One end of the steel posts shall be pointed and the other end shall be capped with an orange or red plastic safety cap which fits snugly to the steel post. The Contractor shall submit to the Engineer for approval a sample of the capped steel post before installation.

Fasteners for attaching silt fence fabric to posts shall be as follows:

A. When prefabricated silt fence is used, posts shall be inserted into sewn pockets.
B. Silt fence fabric shall be attached to wooden posts with nails or staples as shown on the plans or as recommended by the manufacturer or supplier. Tie wire or locking plastic fasteners shall be used to fasten the silt fence fabric to steel posts. Maximum spacing of fasteners shall be 200 mm along the length of the steel post.

Foam Barriers

The foam barrier fabric cover and skirt shall be a woven polypropylene fabric with a minimum tensile strength of 0.44-kN, conforming to ASTM Designation: D 4632. The prefabricated fabric shall be high visibility orange in color that is integral to the fabric; painting shall not be allowed. The fabric shall have an ultraviolet stability exceeding 70 percent.

The foam core shall be urethane foam and shall be shaped and dimensioned as shown on the plans.

Adhesive for foam barriers shall be a solvent-free rubber modified asphalt emulsion. The color of the emulsion shall be brown when wet and shall have a drying period of not more than 3 hours.

Anchoring nails or spikes for foam barriers shall be a minimum of 25 mm in length and capable of penetrating concrete or asphalt surfaces.

Sediment Filter Bag

Sediment filter bag fabric shall be geotextile manufactured from woven polypropylene or polymer material. Sediment filter bag fabric may be made from recycled polymer materials. Polymer materials shall not contain biodegradable filler materials and shall conform to the requirements in ASTM Designation: E 204.

Sediment filter bag fabric shall conform to the following requirements:

Specification	Requirements
Grab tensile strength (25-mm grip), kilonewtons, minimum. in each direction ASTM Designation: D 4632 or appropriate test method for specific polymer	1.35
Elongation, percent minimum in each direction ASTM Designation: D 4632 or appropriate test method for specific polymer	15
Permittivity, 1/sec., minimum. ASTM Designation: D 4491	1.5
Flow rate, liters per minute per square meter, minimum. ASTM Designation: D 4491	8140
Ultraviolet stability, percent tensile strength retained after 500 hours, minimum. ASTM Designation: D 4355 (xenon-arc lamp and water spray weathering method)	80

CONTRACT NO. 04-0120R4

CONTRACT CHANGE ORDER NO 73

SHEET 103 OF 280

The sediment filter bag shall be sized to fit the catch basin or drainage inlet and shall be complete with lifting loops and dump straps attached at the bottom to facilitate emptying of the sediment filter bag. The sediment filter bags shall have a restraint cord approximately halfway up the bag to keep the sides away from the catch basin walls.

INSTALLATION

Temporary drainage inlet protection shall be installed at drainage inlets in paved and unpaved areas as follows:

A. Temporary drainage inlet protection shall be installed such that ponded runoff does not encroach on the traveled way or overtop the curb or dike. Gravel-filled bags shall be placed to control ponding and prevent runoff from overtopping the curb or dike.
B. The bedding area for the temporary drainage inlet protection shall be cleared of obstructions including rocks, clods, and debris greater than 25 mm in diameter before installation.
C. A temporary linear sediment barrier shall be installed up-slope of the existing drainage inlet and parallel with the curb, dike, or flow line to prevent sediment from entering the drainage inlet.

Erosion Control Blanket and Geotextile Fabric

The erosion control blanket and geotextile fabric shall be secured to the surface of the excavated sediment trap with staples and embedded in a trench adjacent to the drainage inlet. The perimeter edge of the erosion control blanket and geotextile fabric shall be anchored in a trench.

Silt Fence

Silt fence shall be installed along the perimeter of the erosion control blanket or geotextile fabric, with the posts facing the drainage inlet. The trench shall be backfilled and tamped to secure the silt fence fabric in the bottom of the trench.

Gravel-filled Bags

Gravel-filled bags shall be stacked to form a gravel bag barrier. The gravel-filled bags shall be placed so that the bags are tightly abutted and overlap the joints in adjacent rows. A spillway shall be created by removing one or more gravel-filled bags from the upper layer of the gravel bag barrier.

Gravel-filled bags shall only be use within shoulder areas when placed behind temporary railing (Type K).

Fiber Rolls

Fiber rolls shall be placed over the erosion control blanket or geotextile fabric with the ends of the fiber roll abutted tightly together. Fiber rolls shall be secured with stakes installed along the length of the fiber rolls. Stakes shall not be installed within 300 mm of the end of the rolls.

Foam Barriers

Foam barriers shall be installed in individual sections adjacent to existing drainage inlets. Foam barriers shall be securely attached to the pavement according to the angle and spacing shown on the plans. Foam barriers shall be installed flush against the sides of concrete or asphalt concrete curbs, dikes, and pavement with the inner material and fabric cover cut smoothly and evenly to provide a tight flush joint.

Sediment Filter Bags

Sediment filter bags shall be installed by removing the drainage inlet grate, placing the sediment bag in the opening, and replacing the grate to secure the sediment filter bag in place.

MAINTENANCE

Temporary drainage inlet protection shall be maintained to provide sediment holding capacity and to reduce runoff velocities. Temporary drainage inlet protection shall be repaired or replaced immediately after the damage occurs.

Sediment deposits, trash, and debris shall be removed from temporary drainage inlet protection as needed or when directed by the Engineer. Removed sediment shall be deposited within the project limits so that the sediment is not subject to erosion by wind or by water. Trash and debris shall be removed and disposed of in accordance with the provisions in Section 7-1.13, "Disposal of Material Outside the Highway Right of Way," of the Standard Specifications.

At locations where rills and other evidence of concentrated runoff have occurred beneath the drainage inlet protection, the protection shall be adjusted to prevent another occurrence.

Temporary silt fence shall be repaired or replaced when silt fence fabric becomes split, torn, or unraveled. Sagging or slumping silt fence shall be repaired with additional stakes or replaced. Broken or split stakes shall be replaced. Temporary silt fence shall be maintained to provide a sediment holding capacity of approximately 1/3 the height of the silt fence fabric above ground.

Sediment in excess of 50 mm above the surface of the erosion control blanket or geotextile fabric shall be removed.

Sediment deposits shall be removed when the deposit is 1/3 the height of the gravel bag barrier or one half the height of the spillway; whichever is less.

Gravel-filled bags shall be replaced when the bag material ruptures or when the binding fails.

Split, torn, unraveling, sagging, or slumping fiber rolls shall be replaced or repaired.

Foam barriers shall be repaired or replaced when the geotextile fabric cover becomes split, torn, or unraveled. Foam barriers that become detached or dislodged shall be reattached to the pavement. Sediment deposits shall be removed when the deposit reaches 1/3 of the foam barrier height.

Sediment filter bags shall be emptied when the restraint cords are no longer visible. Sediment filter bags shall be emptied by placing 25 mm steel reinforcing bars through the lifting loops. The bag shall be emptied of its contents and rinsed before replacement in the drainage inlet.

REMOVAL

When the temporary drainage inlet protection is no longer required the protection materials shall be removed and disposed of in accordance with the provisions in Section 7-1.13, "Disposal of Material Outside the Highway Right of Way," of the Standard Specifications.

CONTRACT NO. 04-0120R4
CONTRACT CHANGE ORDER NO 73

Holes, depressions, or other ground disturbance caused by the removal of the temporary drainage inlet protection shall be backfilled and repaired in accordance with the provisions in Section 15-1.02, "Preservation of Property," of the Standard Specifications.

MEASUREMENT

Quantities of temporary drainage inlet protection will be determined from actual count in place. The protection will be measured one time only and no additional measurement will be recognized.

PAYMENT

The contract unit price paid for temporary drainage inlet protection shall include full compensation for furnishing all labor, materials, tools, equipment, and incidentals, and for doing all the work involved in constructing the temporary drainage inlet protection, complete in place, including maintenance, removal of materials, including cleanup and disposal of retained sediment and debris, and backfilling and repairing holes, depressions and other ground disturbance, as shown on the plans, as specified in the Standard Specifications and these special provisions, and as directed by the Engineer.

No additional compensation will be made if the temporary drainage inlet protection changes during the course of construction.

10-1.05 TEMPORARY COVER

Temporary cover shall be furnished, installed, maintained, and later removed at the locations shown on the approved Storm Water Pollution Prevention Plan in conformance with "Water Pollution Control" of these special provisions, and in conformance with details shown on the plans and these special provisions.

Temporary cover shall be one of the water pollution control practices for soil stabilization. The Storm Water Pollution Prevention Plan shall include the use of temporary cover.

MATERIALS

Temporary Cover Fabric

Temporary cover fabric shall be either a geotextile (engineering fabric) or a geomembrane (plastic sheeting) conforming to the following requirements:

A. Geotextile shall be a woven, slit film fabric which is also known as woven tape. The fabric shall be nonbiodegradable, resistant to deterioration by sunlight, and inert to most soil chemicals. Edges of the film fabric shall be selvage or serge to prevent unraveling. The film fabric shall also conform to the following requirements:

CONTRACT NO. 04-0120R4

CONTRACT CHANGE ORDER NO 73

SHEET 65 OF 280

Specification	Requirements
Grab tensile strength (25-mm grip), kilonewtons, min. ASTM Designation: D4632*	0.89
Elongation at break, percent min. ASTM Designation: D4632*	15
Toughness, kilonewtons, min. (percent elongation x grab tensile strength)	13.3
Permittivity, 1/sec, max. (liters per minute per square meter) ASTM Designation: D 4491	0.08 (244)
Ultraviolet light stability, percent tensile strength retained after 500 hours, min. ASTM Designation: D 4355 (xenon arc lamp method)	70

* or appropriate test method for specific polymer

B. The geomembrane shall consist of 0.25-mm thick, single-ply material in conformance with the requirements in ASTM Designation: D 5199.

Temporary cover fabric shall be manufactured from polyethylene, polypropylene, or comparable polymers. The polymer materials may be virgin, recycled, or a combination of virgin and recycled materials. The polymer materials shall not contain biodegradable filler materials that can degrade the physical or chemical characteristics of the finished fabric. The Engineer may order tests to confirm the absence of biodegradable filler materials in conformance with the requirements in ASTM Designation: E 204 (Fourier Transformed Infrared Spectroscopy-FTIR).

Restrainers

Restrainers for securing the temporary cover fabric on slopes and stockpiles shall consist of one or a combination of the following:

A. Gravel-filled bags used as restrainers shall be knotted, roped, and placed at a maximum of 2 m apart on the temporary cover fabric as shown on the plans. Gravel-filled bags shall be between 13 kg and 22 kg in mass, between 600 mm and 800 mm in length, and between 400 mm and 500 mm in width. Gravel bag fabric shall be nonwoven polypropylene geotextile with a minimum unit weight of 270 g/m^2. The fabric shall have a minimum grab tensile strength (25-mm grip) of 0.89-kN in conformance with the requirements in ASTM Designation: D 4632, and an ultraviolet (UV) stability of 70 percent tensile strength retained after 500 hours in conformance with the requirements in ASTM Designation: D 4355, xenon arc lamp method. Gravel shall consist of noncohesive material between 10 mm and 20 mm in diameter, free of clay balls, organic matter, and other deleterious material. The openings of gravel-filled bags shall be secured to prevent escape of gravel.

B. Restrainers consisting of a steel anchor with a wooden lath shall be fabricated and placed as shown on the plans. Wooden lath shall conform to the provisions in Section 20-2.12, "Lumber," of the Standard Specifications and shall be fir or pine, 38 mm x 89 mm in size, and 2.4 m in length. The wooden lath shall be secured to the temporary cover with steel anchors placed 1.2 m apart along the lath.

The Contractor may use an alternative restrainer if approved by the Engineer in writing. The Contractor shall submit details for an alternative restrainer to the Engineer prior to installation. The alternative restrainer shall be installed and maintained in conformance with these special provisions.

INSTALLATION

Temporary cover shall be installed as follows:

A. Temporary cover fabric shall be placed and anchored as shown on the plans.
B. Abutting edges of the temporary cover fabric shall overlap a minimum of 600 mm. Nonabutting edges shall be embedded in the soil a minimum of 150 mm.
C. Restrainers shall be placed at the overlap area and along the toe of the slope. Restrainers outside the overlap areas shall be placed at a maximum spacing of 2.4 m.
D. Steel anchors shall be installed to allow the leg of the steel anchor to pierce through the temporary cover fabric into the slope with the crown section securing the wooden lath firmly against the slope.
E. Earthen berm, a linear sediment barrier, shall be constructed adjacent to the toe of the slope with a minimum height of 200 mm and a minimum width of 940 mm. The earthen berm shall be hand or mechanically compacted. Alternative linear sediment barrier may be used at the Contractor's expense if approved by the Engineer in writing.

If the Contractor removes the temporary cover in order to facilitate other work, the temporary cover shall be replaced and secured at the Contractor's expense.

When no longer required as determined by the Engineer, temporary cover shall become the property of the Contractor and be removed and disposed of in conformance with the provisions in Section 7-1.13, "Disposal of Material Outside the Highway Right of Way," of the Standard Specifications.

Ground disturbances, including holes and depressions, caused by the installation and removal of the temporary cover shall be backfilled and repaired in conformance with the provisions in Section 15-1.02, "Preservation of Property," of the Standard Specifications.

MAINTENANCE

The Contractor shall maintain the temporary cover throughout the contract to prevent displacement or migration of the material on the slope or stockpiled.

Temporary cover shall be maintained to minimize exposure of the protected area. Restrainers shall be relocated and secured as needed to restrain the temporary cover fabric in place. Temporary cover that breaks free shall be immediately secured. Holes, tears, and voids in the temporary cover fabric shall be patched, repaired, or replaced. When patches or repairs are unacceptable as determined by the Engineer, the temporary cover shall be replaced.

Temporary cover shall be repaired or replaced on the same day when the damage occurs. Damage to the temporary cover resulting from the Contractor's vehicles, equipment, or operations shall be repaired at the Contractor's expense.

MEASUREMENT AND PAYMENT

The quantity of temporary cover to be paid for will be measured by the square meter for the actual area covered.

CONTRACT NO. 04-0120R4
CONTRACT CHANGE ORDER NO 73

The contract price paid per square meter for temporary cover shall include full compensation for furnishing all labor, materials, tools, equipment, and incidentals, and for doing all the work involved in installing temporary cover, complete in place, including trench excavation and backfill, maintenance, and removal of temporary cover, as shown on the plans, as specified in the Standard Specifications and these special provisions, and as directed by the Engineer.

10-1.06 TEMPORARY CONCRETE WASHOUT FACILITY

Temporary concrete washout facilities shall be constructed, maintained, and later removed at the locations shown on the approved Storm Water Pollution Prevention Plan in conformance with "Water Pollution Control" of these special provisions, and in conformance with details shown on the plans and these special provisions.

Temporary concrete washout facilities shall be one of the water pollution control practices for waste management and materials pollution control. The Storm Water Pollution Prevention Plan shall include the use of temporary concrete washout facilities.

MATERIALS

Plastic Liner

Plastic liners shall be single ply, new polyethylene sheeting, a minimum of 0.25-mm thick and shall be free of holes, punctures, tears or other defects that compromise the impermeability of the material. Plastic liners shall not have seams or overlapping joints.

Gravel-filled Bags

Gravel bag fabric shall be nonwoven polypropylene geotextile (or comparable polymer) and shall conform to the following requirements:

Specification	Requirements
Mass per unit area, grams per square meter, min. ASTM Designation: D 5261	270
Grab tensile strength (25-mm grip), kilonewtons, min. ASTM Designation: D4632*	0.89
Ultraviolet stability, percent tensile strength retained after 500 hours, ASTM Designation: D4355, xenon arc lamp method	70

* or appropriate test method for specific polymer

Gravel bags shall be between 600 mm and 800 mm in length, and between 400 mm and 500 mm in width.

Yarn used for binding gravel bags shall be as recommended by the manufacturer or bag supplier and shall be of a contrasting color.

Gravel shall be between 10 mm and 20 mm in diameter, and shall be clean and free from clay balls, organic matter, and other deleterious materials.

The opening of gravel-filled bags shall be secured to prevent gravel from escaping. Gravel-filled bags shall be between 13 kg and 22 kg in mass.

Straw Bales

Straw for straw bales shall conform to the provisions in Section 20-2.06, "Straw," of the Standard Specifications.

Straw bales shall be a minimum of 360 mm in width, 450 mm in height, 900 mm in length and shall have a minimum mass of 23 kg. The straw bale shall be composed entirely of vegetative matter, except for binding material.

Straw bales shall be bound by either wire, nylon or polypropylene string. Jute or cotton binding shall not be used. Baling wire shall be a minimum 1.57 mm in diameter. Nylon or polypropylene string shall be approximately 2 mm in diameter with 360 N of breaking strength.

Stakes

Stakes shall be wood or metal. Wood stakes shall be untreated fir, redwood, cedar, or pine and cut from sound timber. They shall be straight and free of loose or unsound knots or other defects which would render them unfit for the purpose intended. Wood stakes shall be a minimum 50 mm x 50 mm in size. Metal stakes may be used as an alternative, and shall be a minimum 13 mm in diameter. Stakes shall be a minimum 1.2 m in length. The tops of the metal stakes shall be bent at a 90-degree angle or capped with an orange or red plastic safety cap that fits snugly to the metal stake. The Contractor shall submit a sample of the metal stake and plastic cap, if used, for the Engineer's approval prior to installation.

Staples

Staples shall be as shown on the plans. An alternative attachment device such as geotextile pins or plastic pegs may be used instead of staples. The Contractor shall submit a sample of the alternative attachment device for the Engineer's approval prior to installation.

Signs

Wood posts for signs shall conform to the provisions in Section 56-2.02B, "Wood Posts," of the Standard Specifications. Lag screws shall conform to the provisions in Section 56-2.02D, "Sign Panel Fastening Hardware," of the Standard Specifications.

Plywood shall be freshly painted for each installation with not less than 2 applications of flat white paint. Sign letters shown on the plans shall be stenciled with commercial quality exterior black paint. Testing of paint will not be required.

INSTALLATION

Temporary concrete washout facilities shall be as follows:

A. Temporary concrete washout facilities shall be installed prior to beginning placement of concrete and located a minimum of 15 m from storm drain inlets, open drainage facilities, and water courses unless determined infeasible by the Engineer. Temporary concrete washout facilities shall be located away from construction traffic or access areas at a location determined by the Contractor and approved by the Engineer.
B. A sign shall be installed adjacent to each washout facility at a location determined by the Contractor and approved by the Engineer. Signs shall be installed in conformance with the provisions in Section 56-2.03, "Construction," and Section 56-2.04, "Sign Panel Installation," of the Standard Specifications.
C. The length and width of a temporary concrete washout facility may be increased from the minimum dimensions shown on the plans, at the Contractor's expense and upon approval of the Engineer.

D. Temporary concrete washout facilities shall be constructed in sufficient quantity and size to contain liquid and concrete waste generated by washout operations for concrete wastes. These facilities shall be constructed to contain liquid and concrete waste without seepage, spills, or overflow.
E. Berms for below grade temporary concrete washout facilities shall be constructed from compacted native material. Gravel may be used in conjunction with compacted native material.
F. A plastic liner shall be installed in below grade temporary concrete washout facilities.

Details for an alternative temporary concrete washout facility shall be submitted to the Engineer for approval at least 7 days prior to installation.

When temporary concrete washout facilities are no longer required for the work, as determined by the Engineer, the hardened concrete and liquid residue shall be removed and disposed of in conformance with the provisions in Section 15-3.02, "Removal Methods," of the Standard Specifications. Temporary concrete washout facilities shall be disposed of in conformance with the provisions in Section 7-1.13, "Disposal of Material Outside the Highway Right of Way," of the Standard Specifications.

Ground disturbance, including holes and depressions, caused by the installation and removal of the temporary concrete washout facilities shall be backfilled and repaired in conformance with the provisions in Section 15-1.02, "Preservation of Property," of the Standard Specifications.

MAINTENANCE

Temporary concrete washout facilities shall be maintained to provide adequate holding capacity with a minimum freeboard of 300 mm. Maintaining temporary concrete washout facilities shall include removing and disposing of hardened concrete and returning the facilities to a functional condition. Hardened concrete materials shall be removed and disposed of in conformance with the provisions in Section 15-3.02, "Removal Methods," of the Standard Specifications. Holes, rips, and voids in the plastic liner shall be patched and repaired by taping or the plastic liner shall be replaced. The plastic liner shall be replaced when patches or repairs compromise the impermeability of the material as determined by the Engineer.

Gravel bags shall be replaced when the bag material is ruptured or when the yarn has failed, allowing the bag contents to spill out.

Temporary concrete washout facilities shall be repaired or replaced on the same day the damage occurs. Damage to temporary concrete washout facilities resulting from the Contractor's vehicles, equipment, or operations shall be repaired at the Contractor's expense.

MEASUREMENT AND PAYMENT

Quantities of temporary concrete washout facilities will be measured as units determined from actual count in place.

The contract unit price paid for temporary concrete washout facility shall include full compensation for furnishing all labor, materials, tools, equipment and incidentals, and for doing all the work involved in constructing a temporary concrete washout facility, complete in place, including excavation and backfill, maintenance, and removal, as shown on the plans, as specified in the Standard Specifications and these special provisions, and as directed by the Engineer.

CONTRACT NO. 04-0120R4

CONTRACT CHANGE ORDER NO 73

SHEET 70 OF 74

10-1.07 TEMPORARY SILT FENCE

Temporary silt fence shall be furnished, installed, maintained, and later removed at the locations shown on the approved Storm Water Pollution Prevention Plan in conformance with "Water Pollution Control" of these special provisions, and in conformance with details shown on the plans and these special provisions.

Temporary silt fence shall be one of the water pollution control practices for sediment control. The Storm Water Pollution Prevention Plan shall include the use of temporary silt fence.

MATERIALS

At the Contractor's option, temporary silt fence shall be prefabricated or constructed with silt fence fabric, posts, and fasteners.

Silt Fence Fabric

Silt fence fabric shall be geotextile manufactured from woven polypropylene or polymer material. Silt fence fabric may be virgin, recycled, or a combination of virgin and recycled polymer materials. No virgin or recycled polymer materials shall contain biodegradable filler materials that can degrade the physical or chemical characteristics of the finished fabric. The Engineer may order tests to confirm the absence of biodegradable filler materials in conformance to the requirements in ASTM Designation: E 204 (Fourier Transformed Infrared Spectroscopy-FTIR).

Silt fence fabric shall conform to the following requirements:

Specification	Requirements
Width, mm, min.	900
Grab tensile strength (25-mm grip), kilonewtons, min. in each direction ASTM Designation: D 4632*	0.55
Elongation, percent minimum in each direction ASTM Designation: D 4632*	15
Permittivity, 1/sec., min. ASTM Designation: D 4491	0.05
Flow rate, liters per minute per square meter, min. ASTM Designation: D 4491	400
Ultraviolet stability, percent tensile strength retained after 500 hours, min. ASTM Designation: D 4355 (xenon-arc lamp and water spray weathering method)	70

* or appropriate test method for specific polymer

Posts

Posts for temporary silt fence shall be one of the following:

A. Untreated fir or pine, a minimum of 34 mm x 40 mm in size, and 1.2 m in length. One end of the post shall be pointed.
B. Steel and have a "U," "T," "L," or other cross sectional shape that can resist failure from lateral loads. The steel posts shall have a minimum mass per length of 1.1 kg/m and a minimum length of 1.2 m. One end of the steel posts shall be pointed and the other end shall be capped with an orange or red plastic safety cap which fits snugly to the steel post. The Contractor shall submit to the Engineer for approval a sample of the capped steel post prior to installation.

Fasteners

Fasteners for attaching silt fence fabric to posts shall be as follows:

A. When prefabricated silt fence is used, posts shall be inserted into sewn pockets.
B. Silt fence fabric shall be attached to wooden posts with nails or staples as shown on the plans or as recommended by the manufacturer or supplier. Tie wire or locking plastic fasteners shall be used to fasten the silt fence fabric to steel posts. Maximum spacing of fasteners shall be 200 mm along the length of the steel post.

INSTALLATION

Temporary silt fence shall be installed parallel with the slope contour in reaches not to exceed 150 m. A reach is considered a continuous run of temporary silt fence from end to end or from an end to an opening, including joined panels. Each reach shall be constructed so that the elevation at the base of the fence does not deviate from the contour more than 1/3 of the fence height.

The silt fence fabric shall be installed on the side of the posts facing the slope. The silt fence fabric shall be anchored in a trench as shown on the plans. The trench shall be backfilled and mechanically or hand tamped to secure the silt fence fabric in the bottom of the trench.

Mechanically pushing 300 mm of the silt fence fabric vertically through the soil may be allowed if the Contractor can demonstrate to the Engineer that the silt fence fabric will not be damaged and will not slip out of the soil resulting in sediment passing under the silt fence fabric.

At the option of the Contractor, the maximum post spacing may increase to 3 m if the fence is reinforced by a wire or plastic material by prefabrication or by field installation. The field-assembled reinforced temporary silt fence shall be able to retain saturated sediment without collapsing.

Temporary silt fence shall be joined as shown on the plans. The tops of the posts shall be tied together by minimum of 2 wraps of tie wire of a minimum 1.5 mm diameter. The silt fence fabric shall be attached to the posts at the joint as specified in these special provisions.

When no longer required as determined by the Engineer, temporary silt fence shall be removed and disposed of in conformance with the provisions in Section 7-1.13, "Disposal of Material Outside the Highway Right of Way," of the Standard Specifications. Trimming the silt fence fabric and leaving it in place will not be allowed.

Ground disturbance, including holes and depressions, caused by the installation and removal of the temporary silt fence shall be backfilled and repaired in conformance with the provisions in Section 15-1.02, "Preservation of Property," of the Standard Specifications.

MAINTENANCE

Temporary silt fence shall be maintained to provide a sediment holding capacity of approximately 1/3 the height of the silt fence fabric above ground. When sediment exceeds this height or when directed by the Engineer, sediment shall be removed. The removed sediment shall be deposited within the project limits so that the sediment is not subject to erosion by wind or by water.

Temporary silt fence shall be repaired or replaced the same day the damage occurs. Damage to the temporary silt fence resulting from the Contractor's vehicles, equipment, or operations shall be repaired at the Contractor's expense.

CONTRACT NO. 04-0120R4

CONTRACT CHANGE ORDER NO 73

MEASUREMENT AND PAYMENT

Quantities of temporary silt fence to be paid for will be determined by the meter, measured parallel with the ground slope along the line of the installed temporary silt fence, deducting the widths of openings.

The contract price paid per meter for temporary silt fence shall include full compensation for furnishing all labor, materials, tools, equipment, and incidentals, and for doing all the work involved in installing temporary silt fence, complete in place, including trench excavation and backfill, maintenance, and removal, as shown on the plans, as specified in the Standard Specifications and these special provisions, and as directed by the Engineer.

10-1.08 TEMPORARY CONSTRUCTION ENTRANCE

Temporary construction entrances shall be constructed, maintained, and later removed at the locations shown on the approved Storm Water Pollution Prevention Plan in conformance with "Water Pollution Control" of these special provisions, and in conformance with details shown on the plans and these special provisions.

Temporary construction entrances shall be one of the water pollution control practices for tracking control. The Storm Water Pollution Prevention Plan shall include the use of temporary construction entrances.

At the option of the Contractor, temporary construction entrances shall be Type 1 or Type 2.

MATERIALS

Temporary Entrance Fabric

Temporary entrance fabric shall be manufactured from polyester, nylon, or polypropylene material, or any combination thereof. Temporary entrance fabric shall be a nonwoven, needle-punched fabric, free of needles which may have broken off during the manufacturing process. Temporary entrance fabric shall be permeable and shall not act as a wicking agent.

Temporary entrance fabric shall be manufactured from virgin, recycled, or a combination of virgin and recycled polymer materials. No virgin or recycled materials shall contain biodegradable filler materials that can degrade the physical or chemical characteristics of the finished fabric. The Engineer may order tests to confirm the absence of biodegradable filler materials in conformance to the requirements in ASTM Designation: E 204 (Fourier Transformed Infrared Spectroscopy-FTIR).

Temporary entrance fabric shall conform to the following requirements:

Specification	Requirements
Mass per unit area, grams per square meter, min. ASTM Designation: D 5261	235
Grab tensile strength (25-mm grip), kilonewtons, min. ASTM Designation: D4632*	0.89
Elongation at break, percent min. ASTM Designation: D4632*	50
Toughness, kilonewtons, min. (percent elongation x grab tensile strength)	53

* or appropriate test method for specific polymer

Rocks

Rocks shall conform to the material quality requirements in Section 72-2.02, "Materials," of the Standard Specifications for shape and for apparent specific gravity, absorption, and durability index. Rocks used for the temporary entrance shall conform to the following sizes:

Square Screen Size (mm)	Percentage Passing	Percentage Retained
150	100	0
75	0	100

Corrugated Steel Panels

Corrugated steel panels shall be prefabricated and shall be pressed or shop welded, with a slot or hooked section to facilitate coupling at the ends of the panels.

INSTALLATION

Temporary construction entrances shall be installed as follows:

A. Prior to placing the temporary entrance fabric, the areas shall be cleared of all trash and debris. Vegetation shall be removed to the ground level. Trash, debris, and removed vegetation shall be disposed of in conformance with the provisions in Section 7-1.13, "Disposal of Material Outside the Highway Right of Way," of the Standard Specifications.
B. A sump shall be constructed within 6 m of each temporary construction entrance as shown on the plans.
C. Before placing the temporary entrance fabric, the ground shall be graded to a uniform plane. The relative compaction of the top 0.5-m shall be not less than 90 percent. The ground surface shall be free of sharp objects that may damage the temporary entrance fabric, and shall be graded to drain to the sump as shown on the plans.
D. Temporary entrance fabric shall be positioned longitudinally along the alignment of the entrance, as directed by the Engineer.
E. The adjacent ends of the fabric shall be overlapped a minimum length of 300 mm.
F. Rocks to be placed directly over the fabric shall be spread in the direction of traffic, longitudinally and along the alignment of the temporary construction entrance.
G. During spreading of the rocks, vehicles or equipment shall not be driven directly on the fabric. A layer of rocks a minimum 150 mm thick shall be placed between the fabric and the spreading equipment to prevent damage to the fabric.
H. For Type 2 temporary construction entrances, a minimum of 6 coupled panel sections shall be installed for each temporary construction entrance. Prior to installing the panels, the ground surface shall be cleared of all debris to ensure uniform contact with the ground surface.

Fabric damaged during rock placement shall be repaired by placing a new piece of fabric over the damaged area. The piece of fabric shall be large enough to cover the damaged area and provide a minimum 450-mm overlap on all edges.

CONTRACT NO. 04-0120R4
CONTRACT CHANGE ORDER NO 73

Details for a proposed alternative temporary construction entrance or alternative sump shall be submitted to the Engineer for approval at least 7 days prior to installation. The Contractor may eliminate the sump if approved in writing by the Engineer.

If buildup of soil and sediment deter the function of the temporary construction entrance, the Contractor shall immediately remove and dispose of the soil and sediment, and install additional corrugated steel panels and spread additional rocks to increase the capacity of the temporary construction entrance at the Contractor's expense.

When no longer required as determined by the Engineer, temporary construction entrances shall be removed and disposed of in conformance with the provisions in Section 7-1.13, "Disposal of Material Outside the Highway Right of Way," of the Standard Specifications.

Ground disturbance, including holes and depressions, caused by the installation and removal of the temporary construction entrance, including the sumps, shall be backfilled and repaired in conformance with the provisions in Section 15-1.02, "Preservation of Property," of the Standard Specifications.

While the temporary construction entrance is in use, pavement shall be cleaned and sediment removed at least once a day, and as often as necessary when directed by the Engineer. Soil and sediment or other extraneous material tracked onto existing pavement shall not be allowed to enter drainage facilities.

MAINTENANCE

The Contractor shall maintain temporary construction entrances throughout the contract or until removed. The Contractor shall prevent displacement or migration of the rock surfacing or corrugated steel panels. Significant depressions resulting from settlement or heavy equipment shall be repaired by the Contractor, as directed by the Engineer.

Temporary construction entrances shall be maintained to minimize tracking of soil and sediment onto existing public roads.

Temporary construction entrances shall be repaired or replaced on the same day the damage occurs. Damage to the temporary construction entrance resulting from the Contractor's vehicles, equipment, or operations shall be repaired at the Contractor's expense.

MEASUREMENT AND PAYMENT

Quantities of temporary construction entrances will be determined from actual count in place.

The contract unit price paid for temporary construction entrance shall include full compensation for furnishing all labor, materials, tools, equipment, and incidentals, and for doing all the work involved in constructing temporary construction entrance, complete in place, including excavation and backfill, maintenance, and removal, as shown on the plans, as specified in the Standard Specifications and these special provisions, and as directed by the Engineer.

The cost of maintaining the temporary construction entrance will be borne equally by the State and the Contractor. The division of cost will be made be determining the cost of maintaining temporary construction entrance in conformance with the provisions in Section 9-1.03, "Force Account Payment," of the Standard Specifications and paying to the Contractor one-half of that cost.

Cleanup, repair, removal, disposal, or replacement due to improper installation or the Contractor's negligence will not be considered as included in the cost for performing maintenance.

CONTRACT NO. 04-0120R4

CONTRACT CHANGE ORDER NO 73

10-1.09 EROSION CONTROL (NETTING)

Erosion control (netting) shall conform with the details as shown on the plans, as specified in these special provisions, and as directed by the Engineer.

Erosion control (netting) work shall consist of furnishing, installing, and maintaining control netting in ditches or swales, on embankment slopes, excavation slopes and other locations as shown on the plans.

Following the installation of erosion control (netting), erosion control materials shall be applied onto the netting face as specified in "Erosion Control (Type D)," of these special provisions.

MATERIALS

Materials for the erosion control (netting) shall conform to the provisions in Section 20-2, "Materials," of the Standard Specifications and these special provisions.

Erosion Control Netting

Erosion control netting shall consist of 100 percent spun coir fiber and shall conform to the following:

Specification	Requirement
Weight, grams per square meter ASTM Designation: D 3776	400
Minimum Tensile Strength, kilonewtons, ASTM Designation: D 4595-86	9.0 to 11.3 kN/m in longitudinal direction (dry) 5.0 to 10.7 kN/m in cross-direction (dry) 6.0 to 9.8 kN/m in longitudinal direction (wet) 4.0 to 9.4 kN/m in cross- direction (wet)
Roll Width, meters, min.	4
Area/Roll, square meters, min.	200
Open Area, percent	63-70

Staples

Staples shall be as shown on the plans.

INSTALLATION

Erosion control (netting) shall be installed in ditches or swales, on embankment slopes, or excavation slopes as follows:

A. Erosion control (netting) strips shall be placed loosely along the ditch or swale with the longitudinal edges and joints parallel to the centerline of the ditch or swale. Longitudinal joints of netting shall be overlapped and stapled. Transverse joints of netting shall be secured in intermediate joint trenches. Staples shall be driven perpendicular to the slopes. Ends of the netting shall be secured in place in key trenches.

B. Erosion control (netting) strips shall be placed loosely on the embankment or excavation slope with the longitudinal joints perpendicular to the slope contour lines. Longitudinal and transverse joints of netting shall be overlapped and stapled. Staples shall be driven perpendicular to the slopes. Ends of the netting shall be secured in place in key trenches.

CONTRACT NO. 04-0120R4

CONTRACT CHANGE ORDER NO 73

SHEET 74 OF 90

MAINTENANCE

Erosion control (netting) shall be repaired or replaced on the same day the damage occurs. Damaged netting shall be replaced. Washouts between joints or beneath the erosion control (netting) shall be repaired.

Erosion control (netting) damaged during the progress of work or resulting from the Contractor's vehicles, equipment, or operations shall be repaired or replaced at the expense of the Contractor.

MEASUREMENT AND PAYMENT

The quantity of erosion control (netting) will be measured by the square meter as determined from actual slope measurements of the areas covered by the erosion control (netting) excluding overlaps.

The contract price paid per square meter for erosion control (netting) shall include full compensation for furnishing all labor, materials, tools, equipment, and incidentals, and for doing all the work involved in installing erosion control (netting), complete in place, including trench excavation and backfill, as shown on the plans, as specified in the Standard Specifications and these special provisions, and as directed by the Engineer.

10-1.10 OBSTRUCTIONS

Attention is directed to Section 8-1.10, "Utility and Non-Highway Facilities," and Section 15, "Existing Highway Facilities," and Section 51-1.19, "Utility Facilities," of the Standard Specifications and these special provisions.

Attention is directed to the existence of certain underground facilities that may require special precautions be taken by the Contractor to protect the health, safety and welfare of workers and of the public. Facilities requiring special precautions include, but are not limited to: conductors of petroleum products, oxygen, chlorine, and toxic or flammable gases; natural gas in pipelines greater than 150 mm in diameter or pipelines operating at pressures greater than 415 kPa (gage); underground electric supply system conductors or cables, with potential to ground of more than 300 V, either directly buried or in a duct or conduit which do not have concentric grounded or other effectively grounded metal shields or sheaths.

The Contractor shall notify the Engineer and the appropriate regional notification center for operators of subsurface installations at least 2 working days, but not more than 14 calendar days, prior to performing any excavation or other work close to any underground pipeline, conduit, duct, wire or other structure. Regional notification centers include, but are not limited to, the following:

Notification Center	Telephone Number
Underground Service Alert-Northern California (USA)	1-800-642-2444 1-800-227-2600
Underground Service Alert-Southern California (USA)	1-800-422-4133 1-800-227-2600

The following utility facilities will be relocated during the progress of the contract. The Contractor shall notify the Engineer, in writing, prior to doing work in the vicinity of the facility. The utility facility will be relocated within the listed working days, as defined in Section 8-1.06, "Time of Completion," of the Standard Specifications, after the notification is received by the Engineer:

Utility	Location	Working Days
TV Cable (Comcast)	East of Bent W6	15

The Contractor shall notify the Engineer and Comcast at (415) 503-4505, at least 48 hours before excavation and piling work is begun.

Installation of the water mains will require coordination with the Contractor's operations. The Contractor shall make the necessary arrangements with the San Francisco Public Utilities Commission/Water Department (SFWD), through the Engineer, and shall submit a schedule of work, verified by a representative of the utility company, to the Engineer. The schedule of work shall provide not less than the following number of working days, as defined in Section 8-1.06, "Time of Completion," of the Standard Specifications for the utility company to complete their work:

Utility (address)	Work Performed by the SFWD	Working Days
Water Main	Making a connection to an existing main	5
	Chlorination test including laboratory results	5
	Service change over services larger than 50-mm (per each service)	5
	Service change over services less than 50 mm (for up to 6 services)	1
	Excavation Safety Plans review	15

The Contractor shall notify in writing the Engineer and SFWD, at least 15 working days in advance before any work to be performed by SFWD forces for disconnecting, and connecting of the water main, and disinfection. Furthermore, the Contractor shall confirm the scheduled work with the Engineer, and SFWD at (415)550-4956, at least 3 working days before the actual field work by SFWD.

The existing ground seismographic station, and sanitary sewer lift pump station, including pump station, underground vault and sanitary main system, will remain in service for the duration of this contract. The Contractor shall notify the Engineer and City and County of San Francisco Public Utilities Commission at (415) 648-6882 x 1290, and the Berkeley Seismology Specialist at (510) 486-7314 or 882-9816, at least 10 working days before excavation and piling work is begun. The Contractor shall field verify the location of the cable and ensure that the monitoring cable shall not damaged.

The existing electrical concrete duct bank (2.4 kV, 4.1 kV, and 12 kV) shown on the plans, will remain in service for the duration of this contract. The Contractor shall notify the Engineer and City and County of San Francisco Public Utilities Commission at (415) 648-6882 x 1290, at least 10 working days before excavation and piling work is begun. The electrical line shall be physically located in the presence of the authorized representative from the City and County of San Francisco Public Utilities Commission. The Contractor shall not perform any excavation of piling close to the electrical line without the utility owner.

Full compensation for protecting the existing ground seismographic station and monitoring cable, and sanitary sewer lift pump station, including pump station, underground vault and

sanitary main system, and electrical concrete duct bank (2.4 kV, 4.1 kV, and 12 kV) shall be considered as included in the contract prices paid for various items of work and no separate payment will be made therefor.

In the event that the utility facilities mentioned above are not removed or relocated by the date specified and, if in the opinion of the Engineer, the Contractor's operations are delayed or interfered with by reason of the utility facilities not being removed or relocated by the date specified, the State will compensate the Contractor for the delays to the extent provided in Section 8-1.09, "Right of Way Delays," of the Standard Specifications, and not otherwise, except as provided in Section 8-1.10, "Utility and Non-Highway Facilities," of the Standard Specifications.

10-1.11 DUST CONTROL

Dust control shall conform to the provisions in Section 10, "Dust Control," of the Standard Specifications .

10-1.12 CONSTRUCTION AREA SIGNS

Construction area signs for temporary traffic control shall be furnished, installed, maintained, and removed when no longer required in conformance with the provisions in Section 12, "Construction Area Traffic Control Devices," of the Standard Specifications and these special provisions.

Attention is directed to "Furnish Sign" of these special provisions.

Attention is directed to the provisions in "Prequalified and Tested Signing and Delineation Materials" of these special provisions. Type II retroreflective sheeting shall not be used on construction area sign panels. Type III, IV, VII, VIII, or IX retroreflective sheeting shall be used for stationary mounted construction area sign panels.

Unless otherwise shown on the plans or specified in these special provisions, the color of construction area warning and guide signs shall have black legend and border on orange background, except W10-1 or W47(CA) (Highway-Rail Grade Crossing Advance Warning) sign shall have black legend and border on yellow background.

Orange background on construction area signs shall be fluorescent orange.

Repair to construction area sign panels will not be allowed, except when approved by the Engineer. At nighttime under vehicular headlight illumination, sign panels that exhibit irregular luminance, shadowing or dark blotches shall be immediately replaced at the Contractor's expense.

The Contractor shall notify the appropriate regional notification center for operators of subsurface installations at least 2 working days, but not more than 14 calendar days, prior to commencing excavation for construction area sign posts. The regional notification centers include, but are not limited to, the following:

Notification Center	Telephone Number
Underground Service Alert-Northern California (USA)	(800) 642-2444 (800) 227-2600
Underground Service Alert-Southern California (USA)	(800) 422-4133

Excavations required to install construction area signs shall be performed by hand methods without the use of power equipment, except that power equipment may be used if it is determined there are no utility facilities in the area of the proposed post holes. The post hole

CONTRACT NO. 04-0120R4
CONTRACT CHANGE ORDER NO 73
SHEET 79 OF 250

diameter, if backfilled with portland cement concrete, shall be at least 100 mm greater than the longer dimension of the post cross-section.

Construction area signs placed within 4.6 m from the edge of the travel way shall be mounted on stationary mounted sign supports as specified in "Construction Area Traffic Control Devices" of these special provisions.

The Contractor shall maintain accurate information on construction area signs. Signs that are no longer required shall be immediately covered or removed. Signs that convey inaccurate information shall be immediately replaced or the information shall be corrected. Covers shall be replaced when they no longer cover the signs properly. The Contractor shall immediately restore to the original position and location any sign that is displaced or overturned, from any cause, during the progress of work.

10-1.13 MAINTAINING TRAFFIC

Attention is directed to Sections 7-1.08, "Public Convenience," 7-1.09, "Public Safety," and 12, "Construction Area Traffic Control Devices," of the Standard Specifications and to the provisions in "Public Safety" of these special provisions and these special provisions. Nothing in these special provisions shall be construed as relieving the Contractor from the responsibilities specified in Section 7-1.09.

Lane closures shall conform to the provisions in section "Traffic Control System for Lane Closure," of these special provisions.

Personal vehicles of the Contractor's employees shall not be parked on the traveled way or shoulders including any section closed to public traffic, except in the area proposed by the Contractor and approved by the Engineer .

The Contractor shall notify United States of Coast Guard Officer, at (415) 399-3504 of the Contractor's intent to begin work at least 5 working days before work is begun. The Contractor shall cooperate with United States of Coast Guard relative to handling traffic on USCG Road., through the area and shall make arrangements relative to keeping the working area clear of parked vehicles.

The Contractor shall provide and maintain a minimum of one paved traffic lane, not less than 3.6 m wide on USCG Road, during the construction of the electrical duct bank and drainage system across the USCG Road, and bridge bent adjacent to the USCG Road.

The Contractor shall provide and maintain a 3.6 m lane access road to Sanitary Sewer Lift Pump Station, at all time. The Contractor shall submit a written request for an approval from San Francisco Public Utilities Commission through the Engineer at least 96 hours in advance for any construction operation that may block the access road to the sanitary sewer lift pump station.

Full compensation for providing and maintaining the above access shall be considered as included in the contract price paid for various items of work involved and no additional compensation will be allowed therefor.

Attention is directed to "Bridge Tolls" of these special specifications. The access of the contractor's trucks hauling materials to the project site, from westbound Route 80 and westbound bus lanes, located along north side of San Francisco-Oakland Bay Bridge toll plaza, shall not be allowed, during the peak periods from 5:00 a.m. to 10:00 a.m., and 3:00 p.m. to 7:00 p.m., on weekdays.

Designated legal holidays are: January 1st, the third Monday in February, the last Monday in May, July 4th, the first Monday in September, November 11th, Thanksgiving Day, and December 25th. When a designated legal holiday falls on a Sunday, the following Monday shall

CONTRACT NO. 04-0120R4

CONTRACT CHANGE ORDER NO 73

SHEET 50 OF 160

be a designated legal holiday. When November 11th falls on a Saturday, the preceding Friday shall be a designated legal holiday.

Minor deviations from the requirements of this section concerning hours of work which do not significantly change the cost of the work may be permitted upon the written request of the Contractor if, in the opinion of the Engineer, public traffic will be better served and the work expedited. These deviations shall not be adopted by the Contractor until the Engineer has approved the deviations in writing. Other modifications will be made by contract change order.

10-1.14 TRAFFIC CONTROL SYSTEM FOR LANE CLOSURE

A traffic control system shall consist of closing traffic lanes in conformance with the details shown on the plans, the provisions in Section 12, "Construction Area Traffic Control Devices," of the Standard Specifications, the provisions under "Maintaining Traffic" and "Construction Area Signs" of these special provisions, and these special provisions.

The provisions in this section will not relieve the Contractor from the responsibility to provide additional devices or take measures as may be necessary to comply with the provisions in Section 7-1.09, "Public Safety," of the Standard Specifications.

If components in the traffic control system are displaced or cease to operate or function as specified, from any cause, during the progress of the work, the Contractor shall immediately repair the components to the original condition or replace the components and shall restore the components to the original location.

When lane closures are made for work periods only, at the end of each work period, components of the traffic control system, except portable delineators placed along open trenches or excavation adjacent to the traveled way, shall be removed from the traveled way and shoulder. If the Contractor so elects, the components may be stored at selected central locations designated by the Engineer within the limits of the highway right of way.

One-way traffic shall be controlled on USCG Road., during the construction of the electrical duct bank and drainage system across the USCG Road, and bridge bent adjacent to the USCG Road, in conformance with the plan entitled "Traffic Control System for Lane Closure on Two Lane Conventional Highways" and these special provisions.

Additional advance flaggers will be required.

Utilizing a pilot car will be at the option of the Contractor. If the Contractor elects to use a pilot car, the cones shown along the centerline on the plan need not be placed. The pilot car shall have radio contact with personnel in the work area. The maximum speed of the pilot car through the traffic control zone shall be 40 kilometers per hour (25 mph).

The contract lump sum price paid for traffic control system shall include full compensation for furnishing all labor (except for flagging costs), materials (including signs), tools, equipment, and incidentals, and for doing all the work involved in placing, removing, storing, maintaining, moving to new locations, replacing, and disposing of the components of the traffic control system and for furnishing and operating the pilot car, (including driver, radios, other equipment, and labor required), as shown on the plans, as specified in the Standard Specifications and these special provisions, and as directed by the Engineer. Flagging costs will be paid for as provided in Section 12-2.02, "Flagging Costs," of the Standard Specifications.

The adjustment provisions in Section 4-1.03, "Changes," of the Standard Specifications shall not apply to the item of traffic control system. Adjustments in compensation for traffic control system will be made only for increased or decreased traffic control system required by changes ordered by the Engineer and will be made on the basis of the cost of the increased or decreased

traffic control necessary. The adjustment will be made on a force account basis as provided in Section 9-1.03, "Force Account Payment," of the Standard Specifications for increased work and estimated on the same basis in the case of decreased work.

Traffic control system required by work which is classed as extra work, as provided in Section 4-1.03D of the Standard Specifications, will be paid for as a part of the extra work.

10-1.15 EXISTING HIGHWAY FACILITIES

The work performed in connection with various existing highway facilities shall conform to the provisions in Section 15, "Existing Highway Facilities," of the Standard Specifications and these special provisions.

ABANDON PIPE LINE

Existing water mains, and sewers, where shown on the plans to be abandoned, shall be abandoned in place or, at the option of the Contractor, the water mains, and sewers shall be removed and disposed of. Resulting openings into existing structures that are to remain in place shall be plugged with commercial quality concrete containing not less than 300 kg of cement per cubic meter.

Abandoning water mains, and sewers in place shall conform to the following:

A. Water mains, and sewers that intersect the side slopes shall be removed to a depth of not less than one meter measured normal to the plane of the finished side slope, before being abandoned.
B. Water mains, and sewers 300 mm in diameter and larger, shall, at the Contractor's option, be backfilled with either sand, controlled low strength material or slurry cement backfill conforming to the provisions in Section 19-3.062, "Slurry Cement Backfill," of the Standard Specifications by any method acceptable to the Engineer that completely fills the pipe. Sand backfill material shall be clean, free draining, and free from roots and other deleterious substances.
C. The ends of water mains, and sewers shall be securely closed by a 150 mm thick tight fitting plug or wall of commercial quality concrete.

Water mains, and sewers shall not be abandoned until their use is no longer required. The Contractor shall notify the Engineer in advance of any intended culvert or pipeline abandonment.

Full compensation for concrete plugs, pipe removal, structure excavation, and backfill (including sand, controlled low strength material or slurry cement backfill) shall be considered as included in the contract unit price paid for abandon water mains, and sewers and no additional compensation will be allowed therefor.

REMOVE FIRE HYDRANT

Existing fire hydrants, at locations shown on the plans to be removed, shall be removed. Holes at the existing locations shall be backfilled and graded to conform to adjacent conditions where necessary.

The contract unit price paid for remove fire hydrant shall include full compensation for furnishing all labor, materials, tools, equipment, and incidentals, and for doing all the work involved in remove fire hydrant, complete, including removal, transportation and disposal of fire hydrant, related pipes, fittings, valves and accessories, and backfilling and grading the area to

match existing conditions and to drain, as shown on the plans, as specified in the Standard Specifications and these special provisions, and as directed by the Engineer.

RELOCATE FIRE HYDRANT

Existing fire hydrants, at locations shown on the plans to be relocated, shall be relocated. Holes at the existing locations shall be backfilled and graded to conform to adjacent conditions where necessary.

The contract unit price paid for relocate fire hydrant shall include full compensation for furnishing all labor, materials, tools, equipment, and incidentals, and for doing all the work involved in remove fire hydrant, complete, including removal, transportation and disposal of fire hydrant, related pipes, fittings, valves and accessories, and backfilling and grading the area to match existing conditions and to drain, as shown on the plans, as specified in the Standard Specifications and these special provisions, and as directed by the Engineer.

REMOVE ABADON UTILITY AND NON-HIGHWAY FACILITIES

Attention is directed to Section 8-1.10, "Utility and Non-Highway Facilities," and Section 15, "Existing Highway Facilities," and Section 51-1.19, "Utility Facilities," of the Standard Specifications and these special provisions, and "Obstructions," of the special provisions.

Existing abandon utilities and non-highway facilities to be removed as shown on the plans within the limits of structure excavation for the bridge footings, and electrical duct bank as shown on the plan, shall be removed and disposed of, except for the removal and relocation of the fire hydrants.

Full compensation for removing abandon utilities and non-highway facilities within the limits of structure excavation for the bridge footings, and electrical duct bank , shall be considered as included in the contract price paid for the items involved and no additional compensation will be allowed therefor.

Removed existing abandon utilities and non-highway facilities shall be disposed of outside the highway right of way in conformance with the provisions in Section 7-1.13, "Disposal of Material Outside the Highway Right of Way," of the Standard Specifications.

REMOVE TRAFFIC STRIPE ANDPAVEMENT MARKER

Existing traffic stripe and pavement markers, including under lying adhesive, shall be removed at the locations where the electrical duct bank is to be constructed across USCG Road, as shown on the plans and as directed by the Engineer.

Attention is directed to "Water Pollution Control" of these special provisions.

Full compensation for removing traffic stripe, and removing and disposing of pavement markers and underlying adhesive shall be considered as included in the contract price paid for the items involved and no additional compensation will be allowed therefor.

REMOVE DRAINAGE FACILITY

Existing culvert, and Inlet where shown on the plans to be removed, shall be completely removed and disposed of.

Full compensation for salvaging existing frames and grates shall be considered as included in the contract lump sum price paid for remove drainage facility and no additional compensation will be allowed therefor.

REPLACE EXISTING PAVEMENT DELINEATION

Whenever existing pavement delineation is removed, or damaged due to the work involved in installing the electrical duct bank crossing the USCG Road at locations shown on the plans, the Contractor shall replace the pavement delineation in kind to match the existing pavement delineation. Replacement delineation shall be installed at existing or new locations, shall conform to the design of the existing delineation and shall be equal in all respects to the best portions of the existing delineation. The work of replacing existing delineation shall be performed in conformance with the requirements for new work of similar character as specified in the specifications.

Full compensation for replacing or repairing pavement delineation shall be considered as included in the contract price paid per meter for items of work involved and no separate payment will be made therefor.

10-1.16 SEWER VIDEO SURVEY

This work shall consist of investigating, sewer cleaning as necessary to facilitate the survey, documenting, and reporting on the structural condition of the existing sewer lines both before and after seismic retrofit construction from manhole to manhole at the following locations:

SEWER VIDEO SURVEY LOCATIONS

No.	Location	Sewer Pipe Size
1	West of Bent W4	300-mm VCP
2	West of Bent W4	150-mm VCP
3	North of Bent W3	200-mm VCP

The Contractor shall videotape with narration the condition of the sewer to show any and all structural deficiencies including cracks, holes, exposed aggregates and reinforcing bars, honey combed areas, damaged construction joints, deteriorated concrete surfaces, infiltrations, root intrusions and missing pieces. The locations of all deficiencies shall be shown by stationing with reference points agreed upon by the Contractor and the Engineer. The Contractor shall provide the dimensions of all major structural deficiencies and provide supplemental photographs of such deficiencies when requested by the City and County of San Francisco, Bureau of Engineering.

For all the sewer locations as listed above and for all other sewer locations subjected to live loads exceeding AASHTO Standard HS-20, the Contractor shall investigate, document and report the sewer conditions before commencement and after final completion of the project.

At least 10 working days prior to investigation, the Contractor shall submit for acceptance 5 copies of the proposed operations and safety procedure to the Engineer.

The Engineer will either accept or reject such procedures within 5 working days of receipt. Approval of the procedures-will be contingent on them being satisfactory to the City and County of San Francisco. Such procedures must comply with the Safety Procedures Section of this special provision.

The Contractor shall call the general foreman of the City and County of San Francisco Bureau of Street and Sewer Repair two days in advance at (415) 695-2095 for coordination and to gain access to the sewer.

CONTRACT NO. 04-0120R4

CONTRACT CHANGE ORDER NO 73

SHEET 54 OF 69

The Contractor shall cooperate with local authorities relative to handling traffic through the area and shall make his own arrangements relative to keeping the working area clear of parked vehicles.

The Contractor shall prepare for the Engineer's approval, a written report documenting the results of its investigation. Approval of the report will be contingent on it being satisfactory to the City and County of San Francisco. In this report, the Contractor shall place its emphasis on; first, the deficiencies discovered during the investigation; secondly; the proposed measures to remedy such deficiencies and; thirdly, the serviceability of the present sewer.

The Contractor shall: (a) after the pre-construction sewer investigation, deliver 2 copies of the report and 2 copies of the videotape 5 working days before actual start of construction and; (b) after post-construction sewer investigation, deliver 5 copies of the final report and 2 copies of the post-construction videotape, all to the Manager of the Hydraulics Section, Bureau of Engineering, City and County of San Francisco.

SAFETY PROCEDURES

Except to the extent that more explicit or more stringent requirements are stated herein, the Contractor shall comply with all applicable federal, State and local safety and health requirements and standards.

PRE-ENTRY AND CONFINED SPACE OPERATIONS

Pre-entry and confined space operations shall be performed in accordance with the provisions of Article 108 of the General Industry Safety Orders and Section 1532 of the Construction Safety Orders of Title 8 of the California Code of Regulations. These provisions shall govern:

A. Blocking of laterals.
B. Testing for the existence of dangerous water and air contamination.
C. Ventilation requirements.
D. Entry rate work within confined spaces.
E. Precautions for emergencies involving work in the sewer.
F. Other related work.

Testing shall take place for the following suspected conditions prior to entering the sewer, and at times during inspection:

1. Oxygen deficiencies.
2. Carbon dioxide.
3. Combustible gases.
4. Contaminated and infectious waste.

ADDITIONAL REQUIREMENTS

The Contractor shall provide safeguards, including traffic barriers, warning signs, barricades, temporary fences and other similar safeguards that are required for the protection of all personnel during the performance of this contract.

The Contractor shall provide to all workers and inspectors, protective, disposable clothing for sewage conditions consisting of fullbody coveralls, gloves, boot type covers on reusable

CONTRACT NO. 04-0120R4

CONTRACT CHANGE ORDER NO 73

SHEET 55 OF 260

footwear, eye protection, hardhats and safety tools as required by job conditions and CAL-OSHA safety rules and regulations.

The Contractor shall provide air ventilation and respiratory protection to workers and inspectors in accordance with an operation and safety procedures plan required by CAL-OSHA and accepted by the City and County of San Francisco.

The Contractor shall provide a plan for rescue of workers and investigators for review by the Engineer and for approval by the City and County of San Francisco.

PAYMENT

The contract lump sum price paid for sewer video survey shall include full compensation for furnishing all labor, materials, tools, equipment, sewer cleaning as necessary to facilitate the survey, and incidentals, and for doing all the work involved in conducting the sewer video survey, including providing plans, reports and video tape, safety devices and precautions, as shown on the plans, as specified in the Standard Specifications and these special provisions, and as directed by the Engineer.

10-1.17 CLEARING AND GRUBBING

Clearing and grubbing shall conform to the provisions in Section 16, "Clearing and Grubbing," of the Standard Specifications and these special provisions.

Attention is directed to "Hazardous Material Excavation" of "Earthwork," of these specifications.

Clearing and grubbing operations shall result in no visible dust.

Vegetation shall be cleared and grubbed only within the excavation and embankment slope line.

At locations adjacent to a bridge or other structure, clearing and grubbing of vegetation shall be limited to 1.5 m outside the physical limits of the bridge or structure except as specified herein except as specified herein.

Trees, bushes, and shrubs at locations where there is no temporary or permanent grading adjacent to or beneath the temporary bypass structure shall be protected in place from injury or damage resulting from the construction activities. Trees, bushes, and shrubs protected in-place beneath the temporary bypass structure shall be topped or pruned to a level that is 3000 mm, plus or minus 1000 mm, below the lowest elevation of the bridge at the point of the pruning.

Pruning and topping shall be performed under the continuous field supervision of an arborist with current certification by the International Society of Arboriculture (ISA) or as directed by the Engineer. In cases where the arborist concludes that topping or pruning may result in permanent damage to vegetation, the Contractor shall be instructed to clear the vegetation.

Existing vegetation outside the areas to be cleared and grubbed shall be protected from injury or damage resulting from the Contractor's operations. Existing vegetation and trees within the limits of the Environmentally Sensitive Areas (ESA) shall be protected throughout the duration of the Contract.

Activities controlled by the Contractor, except cleanup or other required work, shall be confined within the graded areas of the roadway.

Nothing herein shall be construed as relieving the Contractor of the Contractor's responsibility for final cleanup of the highway as provided in Section 4-1.02, "Final Cleaning Up," of the Standard Specifications.

CONTRACT NO. 04-0120R4

CONTRACT CHANGE ORDER NO 73

SHEET 86 OF 180

The area of clearing and grubbing shown on the plans includes all areas of clearing and grubbing, pruning, and topping. Full compensation for pruning and topping, and providing an arborist shall be considered as included in the contract lump sum price paid for clearing and grubbing and no additional compensation will be allowed therefor.

10-1.18 EARTHWORK

Earthwork shall conform to the provisions in Section 19, "Earthwork," of the Standard Specifications and these special provisions.

Attention is directed to "Hazardous Material Excavation," of these special provisions.

Surplus excavated material shall become the property of the Contractor and shall be disposed of in conformance with the provisions in Section 7-1.13, "Disposal of Material Outside the Highway Right of Way," of the Standard Specifications.

Where a portion of the existing surfacing is to be removed, the outline of the area to be removed shall be cut on a neat line with a power-driven saw to a minimum depth of 50 mm before removing the surfacing. Full compensation for cutting the existing surfacing shall be considered as included in the contract price paid per cubic meter for roadway excavation and no additional compensation will be allowed therefor.

Reinforcement or metal attached to reinforced concrete rubble placed in embankments shall not protrude above the grading plane. Prior to placement within 0.6-m below the grading plane of embankments, reinforcement or metal shall be trimmed to no greater than 20 mm from the face of reinforced concrete rubble. Full compensation for trimming reinforcement or metal shall be considered as included in the contract prices paid per cubic meter for the types of excavation shown in the Engineer's estimate, or the contract prices paid for furnishing and placing imported borrow or embankment material, as the case may be, and no additional compensation will be allowed therefor.

At the option of the Contractor, slurry cement backfill, conforming to the provisions in Section 19-3.062, "Slurry Cement Backfill," of the Standard Specifications, may be used as structure backfill for pipe culverts, including aluminum and aluminum coated pipe culverts.

COMPACTION FOR DUCK BANK BACKFILL

Duck bank backfill shall conform to the provisions in Section 19-3, "Structure Excavation and Backfill," of the Standard Specifications. Backfill placed in duct bank trenches which are to be outside of slope lines and not under pavement shall be compacted to a relative compaction of not less than 90 percent. Backfill on slopes and in areas where pavement is to be constructed shall be compacted to a relative compaction of not less than 95 percent.

If structure excavation or structure backfill for bridges is not otherwise designated by type and payment for the structure excavation or structure backfill has not otherwise been provided for in the Standard Specifications or these special provisions, the structure excavation or structure backfill will be measured and paid for as structure excavation (bridge) or structure backfill (bridge), respectively.

Structure excavation designated as (Type D), for footings at the locations shown on the plans, will be measured and paid for as structure excavation (Type D). Ground water or surface water is expected to be encountered at these locations, but seal course concrete is not shown or specified. Structure excavation for footings at locations not designated on the plans as structure excavation (Type D), and where ground or surface water is encountered, will be measured and paid for as structure excavation (bridge).

CONTRACT NO. 04-0120R4

CONTRACT CHANGE ORDER NO 73

SHEET 87 OF 280

Structure excavation designated as (Type H), for footings at the locations shown on the plans, will be measured and paid for as structure excavation (Type H). Hazardous materials are expected to be encountered during excavation.

Structure excavation designated as (Class II), for footings at the locations shown on the plans, will be measured and paid for as structure excavation (Class II). Petroleum contamination is expected to be encountered during excavation.

HAZARDOUS MATERIAL EXCAVATION

Hazardous material excavation shall consist of excavating hazardous material and Class II material identified on the plans as being within excavation limits shown on the plans, specified in the Standard Specifications, or specified or directed by the Engineer and stockpiling and disposing of the material as specified in this section.

Excavated hazardous material and Class II material shall be managed as follows:

A. Hazardous material – Haul and dispose of the material at a permitted hazardous waste management facility in conformance with Section 2521 of Title 23 of the California Code of Regulations, Section 7-1.13, "Disposal of Material Outside the Highway Right of Way," of the Standard Specifications, and these special provisions.
B. Class II material – Haul and dispose of the material at a permitted Class II waste management facility in conformance with Section 20210 of Title 27 of the California Code of Regulations, Section 7-1.13, "Disposal of Material Outside the Highway Right of Way," of the Standard Specifications, and these special provisions.

Hazardous materials shall be transferred directly from the excavation to a registered transport vehicle, a storage container approved for transport of hazardous waste by the United States Department of Transportation, or a stockpile location approved by the Engineer. Class II material shall be transferred directly from the excavation to a transport vehicle, a storage container, or a stockpile location approved by the Engineer. Stockpile locations for Class II material shall be maintained in conformance with the provisions in "Water Pollution Control" of these special provisions. Stockpile locations for hazardous material shall be maintained as follows:

A. The material shall not contain free liquids that separate readily from the material. The presence or absence of free liquids shall be demonstrated by United States Environmental Protection Agency Method 9095 as modified by Section 66264.314 of Title 22 of the California Code of Regulations.
B. The material shall be stored on undamaged 1.5-mm high-density polyethylene or an equivalent impermeable barrier unless the stockpiling location is on a paved surface. If the location is on a paved surface the thickness of the barrier can be reduced to 0.5-mm high-density polyethylene or its equivalent. The dimensions of the barrier shall exceed the dimensions of the stockpile at all times. Any seams in the barrier shall be sealed to prevent leakage.
C. At the end of each day or prior to a storm event the material shall be covered with undamaged 0.3-mm polyethylene or an equivalent impermeable barrier to prevent windblown dispersion and precipitation run-off and run-on. When more than one sheet is required to cover the material, the sheets shall be overlapped a minimum of 0.45-m in a

manner that prevents water from flowing onto the material. The cover shall be secured in a manner that keeps it in place at all times. Driven anchors shall not be used except at the perimeter of the stockpile. The cover shall be inspected and maintained in conformance with the provisions in "Water Pollution Control" of these special provisions.

These stockpiling requirements apply to temporary storage outside of an excavation or a transport container including, but not limited to, staging of excavated material next to the excavation prior to pick up by loading equipment, accumulating material for full transport loads, and awaiting test results required by a disposal facility. The removal of hazardous material stockpiles shall begin within 90 days of accumulating 100 kg of hazardous material. After final removal has occurred the Contractor shall be responsible for any cleanup deemed necessary by the Engineer.

Hazardous material and Class II material on exteriors of transport vehicles shall be removed and placed either into the current transport vehicle or the excavation prior to the vehicle leaving the loading area. No hazardous material shall be deposited on public roads. The Contractor shall indemnify the State from any costs due to spillage during the transport of the hazardous material to the disposal facility.

Attention is directed to "Hazardous Material, General" of these special provisions.

SAMPLING AND ANALYSIS

The Contractor shall test the material to be excavated for any additional acceptance requirements of the disposal facility. Sampling and analysis shall be performed using the sampling and analysis procedure approved by the Engineer and the disposal facility.

The Contractor may perform additional tests on the material to be excavated for confirmation of the classification as hazardous material or Class II material. Sampling and analysis shall be based on guidelines in USEPA, SW 846, "Test Methods for Evaluating Solid Waste, Volume II: Field Manual Physical/Chemical Methods." Changes in classification of materials will be handled in accordance with Section 4-1.03, "Changes," of the Standard Specifications.

The Contractor shall submit, for approval by the Engineer, a Sampling and Analysis Plan that describes the scope of the investigation, along with the name, address, and certification number of the testing laboratory, 15 working days prior to beginning any sampling or analysis for additional disposal facility requirements, reclassification of material, characterization of material outside of the excavation pay limits or the horizontal limits of the classification zones shown on the plans. The Sampling and Analysis Plan shall be prepared under the guidance of a registered professional experienced in site characterization. The Engineer will make the final decision on reclassification or characterization of material after review of the test data. Six working days shall be allowed for review of test data.

Sampling and analysis of material excavated from outside the horizontal limits of the material classification zones shown on the plans will be paid for as extra work as provided in Section 4-1.03D of the Standard Specifications

Operations shall be conducted in a manner that prevents increases in the quantities of hazardous material resulting from mixing with material containing lower contaminant concentrations. No additional compensation will be made for material requiring reclassification due to failure to segregate the material after excavation.

Hazardous material and Class II material will be measured in conformance with the Standard Specifications and these special provisions for the type of excavation involved.

The contract price paid per cubic meter for structure excavation (Duct Bank) (Type H) and structure excavation (Type H) shall include full compensation for furnishing all labor, materials, tools, equipment, and incidentals and for doing all the work involved in excavating, stockpiling, loading, sampling and analyzing, hauling, and disposing of hazardous material, complete in place, as shown on the plans, as specified in the Standard Specifications and these special provisions, and as directed by the Engineer.

The contract price paid per cubic meter for structure excavation (Class II) shall include full compensation for furnishing all labor, materials, tools, equipment, and incidentals and for doing all the work involved in excavating, stockpiling, loading, sampling and analyzing, hauling, and disposing of Class II material, complete in place, as shown on the plans, as specified in the Standard Specifications and these special provisions, and as directed by the Engineer.

Full compensation for all excavation work involving loading, stockpiling, transporting, and disposing of hazardous material and Class II material, which is not otherwise designated by type or class, and is not otherwise paid for under separate contract items, shall be considered as included in the contract prices paid for the items of work involved and no additional compensation will be allowed therefor.

10-1.19 STRUCTURE EXCAVATION (ROCK)

Structure excavation (rock) shall conform to the provisions in Section 19, "Earthwork," of the Standard Specifications and these special provisions.

Structure excavation (rock) shall be performed using mechanical expansion devices and mechanical impact equipment. The use of explosives or chemical expansion devices will not be allowed.

The Contractor shall submit a rock excavation plan to the Engineer for approval a minimum of 20 working days prior to commencing rock excavation operations. The Contractor shall not perform rock excavation prior to approval of the rock excavation plan. The rock excavation plan shall, at a minimum, include a list of materials and equipment to be used, methods to be used to control and confine the excavated materials, and proposed haul routes to remove the excavated materials from the site.

The Contractor shall remove overburden soil and loose weathered rock for a distance that will be adequate to prevent caving of these materials during rock excavation. The removal of the overburden shall be considered as included in the contract prices paid for the various types of excavation involved and no separate payment will be made therefor.

Where hazardous materials are encountered during rock excavation, excavation shall conform to the additional requirements for special testing, handling, and disposal as specified for Type H excavation in "Earthwork" of these special provisions.

When footing concrete or masonry is to rest upon rock, the rock shall be fully uncovered and the surface thereof shall be removed to a depth sufficient to expose sound (moderately hard) rock. The rock shall be roughly leveled or cut to steps, and shall be roughened. Seams in the rock shall be grouted under pressure or treated as the Engineer may direct and the cost thereof will be paid for as extra work as provided in Section 4-1.03D, "Extra Work," of the Standard Specifications.

For footing construction on or in rock adjacent to existing footings or other structures, excavation limits shall match the limits shown on the plans as closely as possible. Rock shall not be overexcavated beneath existing footings or closer to existing footings than shown on the plans.

Where groundwater is encountered during rock excavation, it shall be the Contractor's responsibility to provide adequate means for groundwater control and removal as necessary to accomplish construction of the work.

Quantities to be paid for as structure excavation (rock) will be determined from limits shown on the plans. Removal of material entering the excavation as a result of slides or slip-outs shall be considered as included in the contract prices paid for the various types of excavation involved and no separate payment will be made therefor.

The contract price paid per cubic meter for structure excavation (rock) shall include full compensation for furnishing all labor, materials, tools, equipment, and incidentals and for doing all the work involved in structure excavation (rock) complete in place, including groundwater control and removal, special testing, handling and disposal where required, rock surface preparation and preparing and submitting the work plan and disposal of the excavated materials, as shown on the plans, as specified in the Standard Specifications and these special provisions, and as directed by the Engineer.

10-1.20 MOVE-IN/MOVE-OUT (EROSION CONTROL)

Move-in/move-out (erosion control) shall include moving onto the project when an area is ready to receive erosion control as determined by the Engineer, setting up all required personnel and equipment for the application of erosion control materials and moving out all personnel and equipment when erosion control in that area is completed.

When areas are ready to receive applications of erosion control (Types D), as determined by the Engineer, the Contractor shall begin erosion control work in that area within 5 working days of the Engineer's notification to perform the erosion control work.

Attention is directed to the requirements of erosion control (Types D) elsewhere in these special provisions.

Quantities of move-in/move-out (erosion control) will be determined as units from actual count as determined by the Engineer. For measurement purposes, a move-in followed by a move-out will be considered as one unit.

The contract unit price paid for move-in/move-out (erosion control) shall include full compensation for furnishing all labor, materials (excluding erosion control materials), tools, equipment, and incidentals and for doing all the work involved in moving in and removing from the project all personnel and equipment necessary for application of erosion control ((Types D), installation of Fiber Rolls, and installation of Erosion Control (Netting), , as shown on the plans, as specified in the Standard Specifications and these special provisions, and as directed by the Engineer.

No adjustment of compensation will be made for any increase or decrease in the quantities of move-in/move-out (erosion control) required, regardless of the reason for the increase or decrease. The provisions in Section 4-1.03B, "Increased or Decreased Quantities," of the Standard Specifications shall not apply to the item of move-in/move-out (erosion control).

10-1.21 EROSION CONTROL (TYPE D)

Erosion control (Type D) shall conform to the provisions in Section 20-3, "Erosion Control," of the Standard Specifications and these special provisions and shall consist of applying erosion control materials to embankment and excavation slopes and all other areas disturbed by construction activities.

Erosion control (Type D) shall be applied when an area is ready to receive erosion control as determined by the Engineer and in conformance with the provisions in "Move-in/Move-out (Erosion Control)" of these special provisions.

Prior to installing erosion control materials, soil surface preparation shall conform to the provisions in Section 19-2.05, "Slopes," of the Standard Specifications, except that rills and gullies exceeding 50 mm in depth or width shall be leveled. Vegetative growth, temporary erosion control materials, and other debris shall be removed from areas to receive erosion control.

MATERIALS

Materials shall conform to the provisions in Section 20-2, "Materials," of the Standard Specifications and these special provisions.

Seed

Seed shall conform to the provisions in Section 20-2.10, "Seed," of the Standard Specifications. Individual seed species shall be measured and mixed in the presence of the Engineer.

Seed shall be delivered to the project site in unopened separate containers with the seed tag attached. Containers without a seed tag attached will not be accepted.

A sample of approximately 30 g of seed will be taken from each seed container by the Engineer.

Legume Seed

Legume seed shall be pellet-inoculated or industrial-inoculated and shall conform to the following:

A. Inoculated seed shall be inoculated in conformance with the provisions in Section 20-2.10, "Seed," of the Standard Specifications.
B. Inoculated seed shall have a calcium carbonate coating.
C. Industrial-inoculated seed shall be inoculated with Rhizobia and coated using an industrial process by a manufacturer whose principal business is seed coating and seed inoculation.
D. Industrial-inoculated seed shall be sown within 180 calendar days after inoculation.
E. Legume seed shall consist of the following:

LEGUME SEED

Botanical Name (Common Name)	Percent Germination (Minimum)	Kilograms Pure Live Seed Per Hectare (Slope Measurement)
Lupinus albinfrons (Silver Bush Lupine)	40	10
Lupinus bicolor (Pygmy-leaf Lupine)	40	5
Trifolium tridentatum (Tomcat Clover)	50	5

Non-Legume Seed

Non-legume seed shall consist of the following:

NON-LEGUME SEED

Botanical Name (Common Name)	Percent Germination (Minimum)	Kilograms Pure Live Seed Per Hectare (Slope Measurement)
Achillea millefolium (White Yarrow)	50	2
Bromus carinatus* (California Brome)	40	10
Eschscholzia californica* (California Poppy)	35	6
Festuca californa (California Fescue)	30	8
Festuca rubra molate (Red Fescue Molate))	40	10
Nassella cernua (Nodding Needlegrass)	40	11

Straw

Straw shall conform to the provisions in Section 20-2.06, "Straw," of the Standard Specifications and these special provisions.

Wheat and barley straw shall be derived from irrigated crops.

Prior to delivery of wheat or barley straw to the project site, the Contractor shall provide the name, address and telephone number of the grower.

Straw shall be free of plastic, glass, metal, rocks, and refuse or other deleterious material.

Compost

At the option of the Contractor, compost may be either A, B, or any combination of both:

A. Green material consisting of chipped, shredded, or ground vegetation; or clean processed recycled wood products.

CONTRACT NO. 04-0120R4

CONTRACT CHANGE ORDER NO 73

SHEET 93 OF 280

B. Class A , exceptional quality biosolids composts, conforming to the requirements in United States Environmental Protection Agency (EPA) regulation 40 CFR, Part 503c.

Compost shall not contain paint, petroleum products, herbicides, fungicides or other chemical residues harmful to plant or animal life. Other deleterious material, plastic, glass, metal or rock shall not exceed 0.1-percent by weight or volume.

Compost shall be thermophilically processed for 15 days. During this process, the compost shall be maintained at minimum internal temperature of 55°C and be thoroughly turned at least 5 times. A 90-day curing period shall follow the thermophilic process.

Compost shall be screened through a screen no larger than 12 mm.

Compost shall measure at least 6 on the maturity and stability scale with a Solvita test kit.

A Certificate of Compliance for compost shall be furnished to the Engineer in conformance with the provisions in Section 6-1.07, "Certificates of Compliance," of the Standard Specifications. The Certificate of Compliance shall state the Solvita maturity and stability scale test result of the compost.

Stabilizing Emulsion

Stabilizing emulsion shall conform to the provisions in Section 20-2.11, "Stabilizing Emulsion," of the Standard Specifications and these special provisions.

Stabilizing emulsion shall be in a dry powder form, may be reemulsifiable, and shall be a processed organic adhesive used as a soil tackifier.

APPLICATION

Erosion control materials shall be applied in separate applications in the following sequence:

A. Legume seed shall be applied by a dry method at the rate of __ kg per hectare (slope measurement). Legume seed shall not be applied with hydro-seeding equipment.

B. The following mixture in the rates indicated shall be applied with hydro-seeding equipment within 60 minutes after the seed has been added to the mixture:

Material	Kilograms Per Hectare (Slope Measurement)
Legume Seed	20
Non-Legume Seed	47
Fiber	47

Material	Cubic Meter Per Hectare (Slope Measurement)
Compost	2

D. Straw shall be applied at the rate of 4.0 tonnes per hectare based on slope measurements. Incorporation of straw will not be required. Straw shall be distributed evenly without clumping or piling.

E. The following mixture in the rates indicated shall be applied with hydro-seeding equipment:

CONTRACT NO. 04-0120R4

CONTRACT CHANGE ORDER NO 73

SHEET 94 OF 280

Material	Kilograms Per Hectare (Slope Measurement)
Fiber	320
Stabilizing Emulsion (Solids)	140

Material	Cubic Meter Per Hectare (Slope Measurement)
Compost	2

The ratio of total water to total stabilizing emulsion in the mixture shall be as recommended by the manufacturer.

Once straw work is started in an area, stabilizing emulsion applications shall be completed in that area on the same working day.

The rates of erosion control materials may be changed by the Engineer to meet field conditions.

MEASUREMENT AND PAYMENT

Compost (erosion control) will be measured by the cubic meter in the vehicle at the point of delivery in conformance with the provisions in Section 9-1.01, "Measurement of Quantities," of the Standard Specifications.

The contract price paid per cubic meter for compost (erosion control) shall include full compensation for furnishing all labor, materials, tools, equipment, and incidentals, and for doing all the work involved in applying compost for erosion control, complete in place, as shown on the plans, as specified in the Standard Specifications and these special provisions, and as directed by the Engineer.

10-1.22 AGGREGATE BASE

Aggregate base shall be Class 3 and shall conform to the provisions in Section 26, "Aggregate Bases," of the Standard Specifications and these special provisions.

The restriction that the amount of reclaimed material included in Class 3 aggregate base not exceed 50 percent of the total volume of the aggregate used shall not apply. Aggregate for Class 3 aggregate base may include reclaimed glass. Aggregate base incorporating reclaimed glass shall not be placed at locations where surfacing will not be placed over the aggregate base.

Aggregate for Class 3 aggregate base shall conform to the following requirements:

Grading Requirements (Percentage Passing)

Sieve Sizes	19 mm Maximum		37.5 mm Maximum	
	Operating Range	Contract Compliance	Operating Range	Contract Compliance
50-mm			100	100
37.5-mm			90-100	87-100
25-mm	100	100	-----	-----
19-mm	90-100	87-100	50-85	45-90
4.75-mm	35-60	35-65	25-45	20-50
600-µm	10-30	5-35	10-25	6-29
75-µm	2-11	0-14	2-11	0-14

CONTRACT NO. 04-0120R4
CONTRACT CHANGE ORDER NO 73
SHEET 95 OF 260

Quality Requirements

Tests	Operating Range	Contract Compliance
Sand Equivalent	25 Min.	22 Min.
Resistance (R-value)	-	78 Min.
Durability Index	-	35 Min.

The aggregate shall not be treated with lime, cement or other chemical material before the Durability Index test is performed. Untreated reclaimed asphalt concrete and portland cement concrete will not be considered to be treated with lime, cement or other chemical material for purposes of performing the Durability Index test.

10-1.23 ASPHALT CONCRETE

Asphalt concrete shall be Type A and shall conform to the provisions in Section 39, "Asphalt Concrete," of the Standard Specifications and these special provisions.

The amount of asphalt binder used in asphalt concrete placed in dikes and overside drains shall be increased one percent by mass of the aggregate over the amount of asphalt binder determined for use in asphalt concrete placed on the traveled way.

The asphalt content of the asphalt mixture will be determined in conformance with the requirements in California Test 379, or in conformance with the requirements in California Test 382.

Paint binder (tack coat) shall be applied to existing surfaces to be surfaced and between layers of asphalt concrete, except when eliminated by the Engineer.

Paint binder (tack coat) shall be, at the option of the Contractor, either slow-setting type asphaltic emulsion, rapid setting asphaltic emulsion or paving asphalt. Slow-setting type asphaltic emulsion and rapid setting asphaltic emulsion shall conform to the provisions in Section 39-4.02, "Prime Coat and Paint Binder (Tack Coat)," and the provisions in Section 94, "Asphaltic Emulsions," of the Standard Specifications. When paving asphalt is used for paint binder, the grade will be determined by the Engineer. Paving asphalt shall conform to the provisions in Section 39-4.02, "Prime Coat and Paint Binder (Tack Coat)," and the provisions in Section 92, "Asphalts," of the Standard Specifications.

Paint binder (tack coat) shall be applied in the liter per square meter range limits specified for the surfaces to receive asphalt concrete in the tables below. The exact application rate within the range will be determined by the Engineer.

Application Rates for Asphaltic Emulsion Paint Binder (Tack Coat) for Asphalt Concrete (except Open Graded) and on Portland Cement Concrete Pavement		
Type of surface to receive paint binder (tack coat)	Slow-Setting Asphaltic Emulsion L/m^2(Note A)	Rapid-Setting Asphaltic Emulsion L/m^2(Note B)
Dense, compact surfaces, between layers, and on PCCP	0.20 – 0.35	0.10 – 0.20
Open textured, or dry, aged surfaces	0.35 – 0.90	0.20 – 0.40

Note A: Slow-setting asphaltic emulsion is asphaltic emulsion diluted with additional water. Water shall be added and mixed with the asphaltic emulsion (containing up to 43 percent water) so the resulting mixture contains one part asphaltic emulsion and not more than one part added water. The water shall be added by the emulsion producer or at a facility that has the capability to mix or agitate the combined blend.

Note B: Undiluted rapid-setting asphaltic emulsion.

Application Rates for Paint Binder (Tack Coat) for Asphalt Concrete (except Open Graded)	
Type of surface to receive paint binder (tack coat)	Paving Asphalt L/m^2
Dense, compact surfaces and between layers	0.05 – 0.10
Open textured, or dry, aged surfaces	0.10 – 0.25

When asphaltic emulsion is used as paint binder (tack coat), asphalt concrete shall not be placed until the applied asphaltic emulsion has completely changed color from brown to black.

The miscellaneous areas to be paid for at the contract price per square meter for place asphalt concrete (miscellaneous area), in addition to the prices paid for the materials involved, shall be limited to the areas listed on the plans.

In addition to the provisions in Section 39-5.01, "Spreading Equipment," of the Standard Specifications, asphalt paving equipment shall be equipped with automatic screed controls and a sensing device or devices.

When placing asphalt concrete to the lines and grades established by the Engineer, the automatic controls shall control the longitudinal grade and transverse slope of the screed. Grade and slope references shall be furnished, installed, and maintained by the Contractor. Should the Contractor elect to use a ski device, the minimum length of the ski device shall be 9 m. The ski device shall be a rigid one piece unit and the entire length shall be utilized in activating the sensor.

When placing the initial mat of asphalt concrete on existing pavement, the end of the screed nearest the centerline shall be controlled by a sensor activated by a ski device not less than 9 m long. The end of the screed farthest from centerline shall be controlled by an automatic transverse slope device set to reproduce the cross slope designated by the Engineer.

When paving contiguously with previously placed mats, the end of the screed adjacent to the previously placed mat shall be controlled by a sensor that responds to the grade of the previously placed mat and will reproduce the grade in the new mat within a 3-mm tolerance. The end of the screed farthest from the previously placed mat shall be controlled in the same way it was controlled when placing the initial mat.

Should the methods and equipment furnished by the Contractor fail to produce a layer of asphalt concrete conforming to the provisions, including straightedge tolerance, of Section 39-6.03, "Compacting," of the Standard Specifications, the paving operations shall be discontinued and the Contractor shall modify the equipment or methods, or furnish substitute equipment.

Should the automatic screed controls fail to operate properly during a day's work, the Contractor may manually control the spreading equipment for the remainder of that day. However, the equipment shall be corrected or replaced with alternative automatically controlled equipment conforming to the provisions in this section before starting another day's work.

The area to which paint binder has been applied shall be closed to public traffic. Care shall be taken to avoid tracking binder material onto existing pavement surfaces beyond the limits of construction.

A drop-off of more than 45 mm will not be allowed at any time between adjacent lanes open to public traffic.

Half-width surfacing operations shall be performed in a manner that, at the end of each day's work, the distance between the ends of adjacent surfaced lanes shall not be greater than can be completed in the following day of normal surfacing operations.

CONTRACT NO. 04-0120R4

CONTRACT CHANGE ORDER NO 73

SHEET 87 OF 280

Where the existing pavement is to be widened by constructing a new structural section adjacent to the existing pavement, the new structural section shall be completed to match the elevation of the edge of the existing pavement at each location prior to spreading and compacting asphalt concrete over the adjacent existing pavement.

Asphalt concrete surfacing shall be placed on existing surfacing, including curve widening, chain control lanes, turnouts, left turn lanes, and public and private road connections shown on the plans, unless otherwise directed by the Engineer.

10-1.24 PILING

GENERAL

Piling shall conform to the provisions in Section 49, "Piling," of the Standard Specifications, and these special provisions.

Unless otherwise specified, welding of any work performed in conformance with the provisions in Section 49, "Piling," of the Standard Specifications, shall be in conformance with the requirements in AWS D1.1.

Epoxy coated reinforcement for pile anchorages shall conform to "Epoxy-Coated Prefabricated Reinforcement," of these special provisions.

Foundation recommendations are included in the "Information Handout" available to the Contractor as provided for in Section 2-1.03, "Examination of Plans, Specifications, Contract, and Site of Work," of the Standard Specifications.

Attention is directed to "Welding" of these special provisions.

If at any time during pile driving the blow count exceeds three times the required blow count as determined from Section 49, "Piling," of the Standard Specifications, the Contractor shall discontinue driving and notify the Engineer. Driving shall not resume until so ordered by the Engineer.

Difficult pile installation is anticipated due to the presence of caving soils, hazardous and contaminated materials, high ground water, cobbles and boulders, rock cuttings, timber piles, subsurface concrete debris, underground utilities, and the requirements of pile embedment into rock.

Drill cuttings from areas within the limits of hazardous materials shall be managed in conformance with the provisions of "Hazardous Material Excavation" in "Earthwork," of these special provisions.

When a calculated ultimate geotechnical capacity is shown on the plans for piling, that value shall be utilized in lieu of nominal resistance in Section 49, "Piling," of the Standard Specifications, and these special provisions.

Jetting and Drilling

Jetting to obtain the specified penetration in conformance with the provisions in Section 49-1.05, "Driving Equipment," of the Standard Specifications shall not be used for driven type piles.

Drilling to obtain the specified penetration in conformance with the provisions in Section 49-1.05, "Driving Equipment," of the Standard Specifications shall not be used for driven type piles except at the locations shown in the following table or where obstructions to pile penetration are encountered. Should such obstructions be encountered, the Contractor shall provide special driving tips or heavier pile sections, subexcavate below the bottom of footing, predrill or core

holes not greater than the least dimension of the pile to the proper depth, spud the piles, or take other measures to prevent damage to the pile during driving.

Materials resulting from jetting or drilling holes shall be disposed of in conformance with the provisions in Section 19-2.06, "Surplus Material," of the Standard Specifications.

Bridge Name or Number	Abutment Number	Bent Number	Elevation of Bottom of Jet or Hole
	--		

Full compensation for providing special tips, heavier sections, or for subexcavating, predrilling, coring, spudding or employing other measures to prevent damage to the piles shall be considered as included in the contract price paid per unit for drive steel pile of the size shown on the plans, and no additional compensation will be allowed therefor.

CAST-IN-DRILLED-HOLE CONCRETE PILES

Cast-in-drilled-hole concrete piling shall conform to the provisions in Section 49-4, "Cast-In-Place Concrete Piles," of the Standard Specifications and these special provisions.

Cast-in-drilled-hole concrete piling (rock socket) shall consist of drilling or coring sockets in bedrock to the depths or lengths specified and filling with reinforced concrete in conformance with the details shown on the plans and these special provisions. Cored holes, if used, shall conform to the provisions of Section 49-4.03, "Drilled Holes," of the Standard Specifications.

The provisions of "Welding" of these special provisions shall not apply to temporary steel casings.

Cast-in-drilled-hole concrete piles 600 mm in diameter or larger may be constructed by excavation and depositing concrete under slurry.

Materials

Concrete deposited under slurry shall have a nominal penetration equal to or greater than 90 mm. Concrete shall be proportioned to prevent excessive bleed water and segregation.

Concrete deposited under slurry shall contain not less than 400 kg of cementitious material per cubic meter.

Attention is directed to "Corrosion Control for Portland Cement Concrete," of these special provisions.

The combined aggregate grading used in concrete for cast-in-drilled-hole concrete piling shall be either the 25-mm maximum grading, the 12.5-mm maximum grading, or the 9.5-mm maximum grading and shall conform to the requirements in Section 90-3 "Aggregate Gradings," of the Standard Specifications.

Mineral Slurry

Mineral slurry shall be mixed and thoroughly hydrated in slurry tanks, and slurry shall be sampled from the slurry tanks and tested before placement in the drilled hole.

Slurry shall be recirculated or continuously agitated in the drilled hole to maintain the specified properties.

Recirculation shall include removal of drill cuttings from the slurry before discharging the slurry back into the drilled hole. When recirculation is used, the slurry shall be sampled and

tested at least every 2 hours after beginning its use until tests show that the samples taken from the slurry tank and from near the bottom of the hole have consistent specified properties. Subsequently, slurry shall be sampled at least twice per shift as long as the specified properties remain consistent.

Slurry that is not recirculated in the drilled hole shall be sampled and tested at least every 2 hours after beginning its use. The slurry shall be sampled mid-height and near the bottom of the hole. Slurry shall be recirculated when tests show that the samples taken from mid-height and near the bottom of the hole do not have consistent specified properties.

Slurry shall also be sampled and tested prior to final cleaning of the bottom of the hole and again just prior to placing concrete. Samples shall be taken from mid-height and near the bottom of the hole. Cleaning of the bottom of the hole and placement of the concrete shall not start until tests show that the samples taken from mid-height and near the bottom of the hole have consistent specified properties.

Mineral slurry shall be tested for conformance to the requirements shown in the following table:

MINERAL SLURRY		
PROPERTY	REQUIREMENT	TEST
Density (kg/m^3) - before placement in the drilled hole - during drilling - prior to final cleaning - immediately prior to placing concrete	 1030* to 1110* 1030* to 1200*	 Mud Weight (Density) API 13B-1 Section 1
Viscosity (seconds/liter) bentonite attapulgite	 29 to 53 29 to 42	Marsh Funnel and Cup API 13B-1 Section 2.2
pH	8 to 10.5	Glass Electrode pH Meter or pH Paper
Sand Content (percent) - prior to final cleaning - immediately prior to placing concrete	 less than or equal to 4.0	Sand API 13B-1 Section 5
*When approved by the Engineer, slurry may be used in salt water, and the allowable densities may be increased up to 32 kg/m^3. Slurry temperature shall be at least 4°C when tested.		

Any caked slurry on the sides or bottom of hole shall be removed before placing reinforcement. If concrete is not placed immediately after placing reinforcement, the

reinforcement shall be removed and cleaned of slurry, the sides of the drilled hole cleaned of caked slurry, and the reinforcement again placed in the hole for concrete placement.

Synthetic Slurry

Synthetic slurries shall be used in conformance with the manufacturer's recommendations and these special provisions. The following synthetic slurries may be used:

PRODUCT	MANUFACTURER
SlurryPro CDP	KB Technologies Ltd. 3648 FM 1960 West Suite 107 Houston, TX 77068 (800) 525-5237
Super Mud	PDS Company c/o Champion Equipment Company 8140 East Rosecrans Ave. Paramount, CA 90723 (562) 634-8180
Shore Pac GCV	CETCO Drilling Products Group 1350 West Shure Drive Arlington Heights, IL 60004 (847) 392-5800
Novagel Polymer	Geo-Tech Drilling Fluids 220 N. Zapata Hwy, Suite 11A Laredo, TX 78043 (210) 587-4758

Inclusion of a synthetic slurry on the above list may be obtained by meeting the Department's requirements for synthetic slurries. The requirements can be obtained from the Office of Structure Design, P.O. Box 942874, Sacramento, CA 94274-0001.

Synthetic slurries listed may not be appropriate for a given site.

Synthetic slurries shall not be used in holes drilled in primarily soft or very soft cohesive soils as determined by the Engineer.

A manufacturer's representative, as approved by the Engineer, shall provide technical assistance for the use of their product, shall be at the site prior to introduction of the synthetic slurry into a drilled hole, and shall remain at the site until released by the Engineer.

Synthetic slurries shall be sampled and tested at both mid-height and near the bottom of the drilled hole. Samples shall be taken and tested during drilling as necessary to verify the control of the properties of the slurry. Samples shall be taken and tested when drilling is complete, but prior to final cleaning of the bottom of the hole. When samples are in conformance with the requirements shown in the following tables for each slurry product, the bottom of the hole shall be cleaned and any loose or settled material removed. Samples shall be obtained and tested after final cleaning and immediately prior to placing concrete.

SlurryPro CDP synthetic slurries shall be tested for conformance to the requirements shown in the following table:

SLURRYPRO CDP KB Technologies Ltd.		
PROPERTY	REQUIREMENT	TEST
Density (kg/m^3) - during drilling - prior to final cleaning - just prior to placing concrete	 less than or equal to 1075* less than or equal to 1025*	Mud Weight (Density) API 13B-1 Section 1
Viscosity (seconds/liter) - during drilling -prior to final cleaning - just prior to placing concrete	 53 to 127 less than or equal to 74	Marsh Funnel and Cup API 13B-1 Section 2.2
pH	6 to 11.5	Glass Electrode pH Meter or pH Paper
Sand Content (percent) - prior to final cleaning - just prior to placing concrete	 less than or equal to 0.5	Sand API 13B-1 Section 5
*When approved by the Engineer, slurry may be used in salt water, and the allowable densities may be increased up to 32 kg/m^3. Slurry temperature shall be at least 4°C when tested.		

Super Mud synthetic slurries shall be tested for conformance to the requirements shown in the following table:

SUPER MUD PDS Company		
PROPERTY	REQUIREMENT	TEST
Density (kg/m^3) - prior to final cleaning - just prior to placing concrete	less than or equal to 1025*	Mud Weight (Density) API 13B-1 Section 1
Viscosity (seconds/liter) - during drilling - prior to final cleaning - just prior to placing concrete	34 to 64 less than or equal to 64	Marsh Funnel and Cup API 13B-1 Section 2.2
pH	8 to 10.0	Glass Electrode pH Meter or pH Paper
Sand Content (percent) - prior to final cleaning -just prior to placing concrete	less than or equal to 0.5	Sand API 13B-1 Section 5
*When approved by the Engineer, slurry may be used in salt water, and the allowable densities may be increased up to 32 kg/m^3. Slurry temperature shall be at least 4°C when tested.		

Shore Pac GCV synthetic slurries shall be tested for conformance to the requirements shown in the following table:

95 CONTRACT NO. 04-0120R4

CONTRACT CHANGE ORDER NO 73

Shore Pac GCV CETCO Drilling Products Group		
PROPERTY	REQUIREMENT	TEST
Density (kg/m^3) - prior to final cleaning - just prior to placing concrete	less than or equal to 1025*	Mud Weight (Density) API 13B-1 Section 1
Viscosity (seconds/liter) - during drilling - prior to final cleaning - just prior to placing concrete	35 to 78 less than or equal to 60	Marsh Funnel and Cup API 13B-1 Section 2.2
pH	8.0 to 11.0	Glass Electrode pH Meter or pH Paper
Sand Content (percent) - prior to final cleaning -just prior to placing concrete	less than or equal to 0.5	Sand API 13B-1 Section 5
*When approved by the Engineer, slurry may be used in salt water, and the allowable densities may be increased up to 32 kg/m^3. Slurry temperature shall be at least 4°C when tested.		

Novagel Polymer synthetic slurries shall be tested for conformance to the requirements shown in the following table:

CONTRACT NO. 04-0120R4

CONTRACT CHANGE ORDER NO 73

SHEET 104 OF 280

NOVAGEL POLYMER Geo-Tech Drilling Fluids		
PROPERTY	REQUIREMENT	TEST
Density (kg/m^3) - during drilling - prior to final cleaning - just prior to placing concrete	 less than or equal to 1075* less than or equal to 1025*	Mud Weight (Density) API 13B-1 Section 1
Viscosity (seconds/liter) - during drilling - prior to final cleaning - just prior to placing concrete	 48 to 110 less than or equal to 110	Marsh Funnel and Cup API 13B-1 Section 2.2
pH	6.0 to 11.5	Glass Electrode pH Meter or pH Paper
Sand Content (percent) - prior to final cleaning -just prior to placing concrete	 less than or equal to 0.5	Sand API 13B-1 Section 5
*When approved by the Engineer, slurry may be used in salt water, and the allowable densities may be increased up to 32 kg/m^3. Slurry temperature shall be at least 4°C when tested.		

Water Slurry

At the option of the Contractor, water may be used as slurry when casing is used for the entire length of the drilled hole.

Water slurry shall be tested for conformance to the requirements shown in the following table:

CONTRACT NO. 04-0120R4
CONTRACT CHANGE ORDER NO 73
SHEET 165 OF 280

WATER SLURRY		
PROPERTY	REQUIREMENT	TEST
Density (kg/m^3) - prior to final cleaning - just prior to placing concrete	1017 *	Mud Weight (Density) API 13B-1 Section 1
Sand Content (percent) - prior to final cleaning -just prior to placing concrete	less than or equal to 0.5	Sand API 13B-1 Section 5
*When approved by the Engineer, salt water slurry may be used, and the allowable densities may be increased up to 32 kg/m^3.		

Construction

The Contractor shall submit a placing plan to the Engineer for approval prior to producing the test batch for cast-in-drilled-hole concrete piling and at least 10 working days prior to constructing piling. The plan shall include complete descriptions, details, and supporting calculations as listed below:

A. Requirements for all cast-in-drilled hole concrete piling:

1. Concrete mix design, certified test data, and trial batch reports.
2. Drilling or coring methods and equipment.
3. Proposed method for casing installation and removal when necessary.
4. Plan view drawing of pile showing reinforcement and inspection pipes, if required.
5. Methods for placing, positioning, and supporting bar reinforcement.
6. Methods and equipment for accurately determining the depth of concrete and actual and theoretical volume placed, including effects on volume of concrete when any casings are withdrawn.
7. Methods and equipment for verifying that the bottom of the drilled hole is clean prior to placing concrete.
8. Methods and equipment for preventing upward movement of reinforcement, including the Contractor's means of detecting and measuring upward movement during concrete placement operations.

B. Additional requirements when concrete is placed under slurry:

1. Concrete batching, delivery, and placing systems, including time schedules and capacities therefor. Time schedules shall include the time required for each concrete placing operation at each pile.
2. Concrete placing rate calculations. When requested by the Engineer, calculations shall be based on the initial pump pressures or static head on the concrete and losses

throughout the placing system, including anticipated head of slurry and concrete to be displaced.

3. Suppliers' test reports on the physical and chemical properties of the slurry and any proposed slurry chemical additives, including Material Safety Data Sheet.
4. Slurry testing equipment and procedures.
5. Methods of removal and disposal of excavation, slurry, and contaminated concrete, including removal rates.
6. Methods and equipment for slurry agitating, recirculating, and cleaning.

In addition to compressive strength requirements, the consistency of the concrete to be deposited under slurry shall be verified before use by producing a test batch. The test batch shall be produced and delivered to the project under conditions and in time periods similar to those expected during the placement of concrete in the piles. Concrete for the test batch shall be placed in an excavated hole or suitable container of adequate size to allow for testing as specified herein. Depositing of test batch concrete under slurry will not be required. In addition to meeting the specified nominal penetration, the test batch shall meet the following requirements:

A. For piles where the time required for each concrete placing operation, as submitted in the placing plan, will be 2 hours or less, the test batch shall demonstrate that the proposed concrete mix design achieves either a penetration of at least 50 mm or a slump of at least 125 mm after twice that time has elapsed.
B. For piles where the time required for each concrete placing operation, as submitted in the placing plan, will be more than 2 hours, the test batch shall demonstrate that the proposed concrete mix design achieves either a penetration of at least 50 mm or a slump of at least 125 mm after that time plus 2 hours has elapsed.

The time period shall begin at the start of placement. The concrete shall not be vibrated or agitated during the test period. Penetration tests shall be performed in conformance with the requirements in California Test 533. Slump tests shall be performed in conformance with the requirements in ASTM Designation: C 143. Upon completion of testing, the concrete shall be disposed of in conformance with the provisions in Section 7-1.13, "Disposal of Material Outside the Highway Right of Way," of the Standard Specifications.

The concrete deposited under slurry shall be carefully placed in a compact, monolithic mass and by a method that will prevent washing of the concrete. Concrete deposited under slurry need not be vibrated. Placing concrete shall be a continuous operation lasting not more than the time required for each concrete placing operation at each pile, as submitted in the placing plan, unless otherwise approved in writing by the Engineer. The concrete shall be placed with concrete pumps and delivery tube system of adequate number and size to complete the placing of concrete in the time specified. The delivery tube system shall consist of one of the following:

A. A tremie tube or tubes, each of which are at least 250 mm in diameter, fed by one or more concrete pumps.
B. One or more concrete pump tubes, each fed by a single concrete pump.

The delivery tube system shall consist of watertight tubes with sufficient rigidity to keep the ends always in the mass of concrete placed. If only one delivery tube is utilized to place the concrete, the tube shall be placed near the center of the drilled hole. Multiple tubes shall be

CONTRACT NO. 04-0120R4

CONTRACT CHANGE ORDER NO 73

SHEET 101 OF 280

uniformly spaced in the hole. Internal bracing for the steel reinforcing cage shall accommodate the delivery tube system. Tremies shall not be used for piles without space for a 250-mm tube.

Spillage of concrete into the slurry during concrete placing operations shall not be allowed. Delivery tubes shall be capped with a watertight cap, or plugged above the slurry level with a good quality, tight fitting, moving plug that will expel the slurry from the tube as the tube is charged with concrete. The cap or plug shall be designed to be released as the tube is charged. The pump discharge or tremie tube shall extend to the bottom of the hole before charging the tube with concrete. After charging the delivery tube system with concrete, the flow of concrete through a tube shall be induced by slightly raising the discharge end. During concrete placement, the tip of the delivery tube shall be maintained as follows to prevent reentry of the slurry into the tube. Until at least 3 m of concrete has been placed, the tip of the delivery tube shall be within 150 mm of the bottom of the drilled hole, and then the embedment of the tip shall be maintained at least 3 m below the top surface of the concrete. Rapid raising or lowering of the delivery tube shall not be permitted. If the seal is lost or the delivery tube becomes plugged and must be removed, the tube shall be withdrawn, the tube cleaned, the tip of the tube capped to prevent entrance of the slurry, and the operation restarted by pushing the capped tube 3 m into the concrete and then reinitiating the flow of concrete.

When slurry is used, a fully operational standby concrete pump, adequate to complete the work in the time specified, shall be provided at the site during concrete placement. The slurry level shall be maintained within 300 mm of the top of the drilled hole.

A log of concrete placement for each drilled hole shall be maintained by the Contractor when concrete is deposited under slurry. The log shall show the pile location, tip elevation, dates of excavation and concrete placement, total quantity of concrete deposited, length and tip elevation of any casing, and details of any hole stabilization method and materials used. The log shall include a 215 mm x 280 mm sized graph of the concrete placed versus depth of hole filled. The graph shall be plotted continuously throughout placing of concrete. The depth of drilled hole filled shall be plotted vertically with the pile tip oriented at the bottom and the quantity of concrete shall be plotted horizontally. Readings shall be made at least at each 1.5 m of pile depth, and the time of the reading shall be indicated. The graph shall be labeled with the pile location, tip elevation, cutoff elevation, and the dates of excavation and concrete placement. The log shall be delivered to the Engineer within one working day of completion of placing concrete in the pile.

After placing reinforcement and prior to placing concrete in the drilled hole, if drill cuttings settle out of the slurry, the bottom of the drilled hole shall be cleaned. The Contractor shall verify that the bottom of the drilled hole is clean.

If temporary casing is used, concrete placed under slurry shall be maintained at a level at least 1.5 m above the bottom of the casing. The withdrawal of casings shall not cause contamination of the concrete with slurry.

Material resulting from using slurry shall be disposed of in conformance with the provisions in Section 7-1.13, "Disposal of Material Outside the Highway Right of Way," of the Standard Specifications.

Acceptance Testing and Mitigation

Vertical inspection pipes for acceptance testing shall be provided in all cast-in-drilled-hole concrete piles that are larger than 600 mm in diameter, except when the holes are dry or when the holes are dewatered without the use of temporary casing to control ground water.

Inspection pipes shall be Schedule 40 polyvinyl chloride pipes with a nominal inside diameter of 50 mm. Each inspection pipe shall be capped top and bottom and shall have watertight couplers to provide a clean, dry and unobstructed 50-mm diameter clear opening from 1.0 m above the pile cutoff down to the bottom of the reinforcing cage.

If the Contractor drills the hole below the specified tip elevation, the reinforcement and the inspection pipes shall be extended to 75 mm clear of the bottom of the drilled hole.

Inspection pipes shall be placed around the pile, inside the outermost spiral or hoop reinforcement, and 75 mm clear of the vertical reinforcement, at a uniform spacing not exceeding 840 mm measured along the circle passing through the centers of inspection pipes. A minimum of 2 inspection pipes per pile shall be used. When the vertical reinforcement is not bundled and each bar is not more than 26 mm in diameter, inspection pipes may be placed 50 mm clear of the vertical reinforcement. The inspection pipes shall be placed to provide the maximum diameter circle that passes through the centers of the inspection pipes while maintaining the clear spacing required herein. The pipes shall be installed in straight alignment, parallel to the main reinforcement, and securely fastened in place to prevent misalignment during installation of the reinforcement and placing of concrete in the hole.

The Contractor shall log the location of the inspection pipe couplers with respect to the plane of pile cut off, and these logs shall be delivered to the Engineer upon completion of the placement of concrete in the drilled hole.

After placing concrete and before requesting acceptance tests, each inspection pipe shall be tested by the Contractor in the presence of the Engineer by passing a 48.3-mm diameter rigid cylinder 610 mm long through the complete length of pipe. If the 48.3-mm diameter rigid cylinder fails to pass any of the inspection pipes, the Contractor shall attempt to pass a 32.0-mm diameter rigid cylinder 1.375 m long through the complete length of those pipes in the presence of the Engineer. If an inspection pipe fails to pass the 32.0-mm diameter cylinder, the Contractor shall immediately fill all inspection pipes in the pile with water.

The Contractor shall replace each inspection pipe that does not pass the 32.0-mm diameter cylinder with a 50.8-mm diameter hole cored through the concrete for the entire length of the pile. Cored holes shall be located as close as possible to the inspection pipes they are replacing and shall be no more than 150 mm inside the reinforcement. Coring shall not damage the pile reinforcement. Cored holes shall be made with a double wall core barrel system utilizing a split tube type inner barrel. Coring with a solid type inner barrel will not be allowed. Coring methods and equipment shall provide intact cores for the entire length of the pile concrete. The coring operation shall be logged by an Engineering Geologist or Civil Engineer licensed in the State of California and experienced in core logging. Coring logs shall include complete descriptions of inclusions and voids encountered during coring, and shall be delivered to the Engineer upon completion. Concrete cores shall be preserved, identified with the exact location the core was recovered from within the pile, and made available for inspection by the Engineer.

Acceptance tests of the concrete will be made by the Engineer, without cost to the Contractor. Acceptance tests will evaluate the homogeneity of the placed concrete. Tests will include gamma-gamma logging. Tests may also include crosshole sonic logging and other means of inspection selected by the Engineer. The Contractor shall not conduct operations within 8.0 m of the gamma-gamma logging operations. The Contractor shall separate reinforcing steel as necessary to allow the Engineer access to the inspection pipes to perform gamma-gamma logging or other acceptance testing. After requesting acceptance tests and providing access to the piling, the Contractor shall allow 3 weeks for the Engineer to conduct these tests and make determination of acceptance if the 48.3-mm diameter cylinder passed all

inspection pipes, and 4 weeks if only the 32.0-mm diameter cylinder passed all inspection pipes. Should the Engineer fail to complete these tests within the time allowance, and if in the opinion of the Engineer, the Contractor's controlling operation is delayed or interfered with by reason of the delay in inspection, the delay will be considered a right of way delay as specified in Section 8-1.09, "Right of Way Delays," of the Standard Specifications.

All inspection pipes and cored holes in a pile shall be dewatered and filled with grout after notification by the Engineer that the pile is acceptable. Placement and removal of water in the inspection pipes shall be at the Contractor's expense. Grout shall conform to the provisions in Section 50-1.09, "Bonding and Grouting," of the Standard Specifications. The inspection pipes and holes shall be filled using grout tubes that extend to the bottom of the pipe or hole or into the grout already placed.

If acceptance testing performed by the Engineer determines that a pile does not meet the requirements of the specifications, then that pile will be rejected and all depositing of concrete under slurry or concrete placed using temporary casing for the purpose of controlling groundwater shall be suspended until written changes to the methods of pile construction are approved in writing by the Engineer.

The Contractor shall submit to the Engineer for approval a mitigation plan for repair, supplementation, or replacement for each rejected cast-in-drilled-hole concrete pile, and this plan shall conform to the provisions in Section "Working drawings," of these special provisions. Prior to submitting this mitigation plan, the Engineer will hold a repair feasibility meeting with the Contractor to discuss the feasibility of repairing rejected piling. The Engineer will consider the size of the defect, the location of the defect, and the design information and corrosion protection considerations for the pile. This information will be made available to the Contractor, if appropriate, for the development of the mitigation plan. If the Engineer determines that it is not feasible to repair the rejected pile, the Contractor shall not include repair as a means of mitigation and shall proceed with the submittal of a mitigation plan for replacement or supplementation of the rejected pile.

If the Engineer determines that a rejected pile does not require mitigation due to structural, geotechnical, or corrosion concerns, the Contractor may elect to 1) repair the pile per the approved mitigation plan, or 2) not repair anomalies found during acceptance testing of that pile. For such unrepaired piles, the Contractor shall pay to the State, $400 per cubic meter for the portion of the pile affected by the anomalies. The volume, in cubic meters, of the portion of the pile affected by the anomalies, shall be calculated as the area of the cross-section of the pile affected by each anomaly, in square meters, as determined by the Engineer, multiplied by the distance, in meters, from the top of each anomaly to the specified tip of the pile. If the volume calculated for one anomaly overlaps the volume calculated for additional anomalies within the pile, the calculated volume for the overlap shall only be counted once. In no case shall the amount of the payment to the State for any such pile be less than $400. The Department may deduct the amount from any moneys due, or that may become due the Contractor under the contract.

Pile mitigation plans shall include the following:

A. The designation and location of the pile addressed by the mitigation plan.
B. A review of the structural, geotechnical, and corrosion design requirements of the rejected pile.
C. A step by step description of the mitigation work to be performed, including drawings if necessary.

CONTRACT NO. 04-0120R4
CONTRACT CHANGE ORDER NO 73
SHEET NO OF 280

D. An assessment of how the proposed mitigation work will address the structural, geotechnical, and corrosion design requirements of the rejected pile.
E. Methods for preservation or restoration of existing earthen materials.
F. A list of affected facilities, if any, with methods and equipment for protection of these facilities during mitigation.
G. The State assigned contract number, bridge number, full name of the structure as shown on the contract plans, District-County-Route-Kilometer Post, and the Contractor's (and Subcontractor's if applicable) name on each sheet.
H. A list of materials, with quantity estimates, and personnel, with qualifications, to be used to perform the mitigation work.
I. The seal and signature of an engineer who is licensed as a Civil Engineer by the State of California.

For rejected piles to be repaired, the Contractor shall submit a pile mitigation plan that contains the following additional information:

A. An assessment of the nature and size of the anomalies in the rejected pile.
B. Provisions for access for additional pile testing if required by the Engineer.

For rejected piles to be replaced or supplemented, the Contractor shall submit a pile mitigation plan that contains the following additional information:

A. The proposed location and size of additional piling.
B. Structural details and calculations for any modification to the structure to accommodate the replacement or supplemental piling.

All provisions for cast-in-drilled-hole concrete piling shall apply to replacement piling.

The Contractor shall allow the Engineer 3 weeks to review the mitigation plan after a complete submittal has been received.

Should the Engineer fail to review the complete pile mitigation submittal within the time specified, and if, in the opinion of the Engineer, the Contractor's controlling operation is delayed or interfered with by reason of the delay in reviewing the pile mitigation plan, an extension of time commensurate with the delay in completion of the work thus caused will be granted in conformance with the provisions in Section 8-1.09, "Right of Way Delays," of the Standard Specifications.

When repairs are performed, the Contractor shall submit a mitigation report to the Engineer within 10 days of completion of the repair. This report shall state exactly what repair work was performed and quantify the success of the repairs relative to the submitted mitigation plan. The mitigation report shall be stamped and signed by an engineer that is licensed as a Civil Engineer by the State of California. The mitigation report shall show the State assigned contract number, bridge number, full name of the structure as shown on the contract plans, District-County-Route-Kilometer Post, and the Contractor (and Subcontractor if applicable) name on each sheet. The Engineer will be the sole judge as to whether a mitigation proposal is acceptable, the mitigation efforts are successful, and to whether additional repairs, removal and replacement, or construction of a supplemental foundation is required.

CONTRACT NO. 04-0120R4

CONTRACT CHANGE ORDER NO 73

SHEET 111 OF 280

MEASUREMENT AND PAYMENT (PILING)

Measurement and payment for the various types and classes of piles shall conform to the provisions in Sections 49-6.01, "Measurement," and 49-6.02, "Payment," of the Standard Specifications and these special provisions.

Payment for cast-in-place concrete piling shall conform to the provisions in Section 49-6.02, "Payment," of the Standard Specifications and these special provisions except that, when the diameter of cast-in-place concrete piling is shown on the plans as 600 mm or larger, reinforcement in the piling will be paid for by the kilogram as bar reinforcing steel (bridge).

Full compensation for slurry, depositing concrete under slurry, test batches, inspection pipes, filling inspection holes and pipes with grout, drilling oversized cast-in-drilled-hole concrete piling, filling cave-ins and oversized piles with concrete, and redrilling through concrete, shall be considered as included in the contract prices paid per meter for cast-in-drilled-hole concrete piling of the types and sizes listed in the Engineer's Estimate, and no additional compensation will be allowed therefor.

The contract price paid per meter for cast-in-drilled-hole concrete piling (rock socket) of the sizes listed in the Engineer's Estimate shall include full compensation for furnishing all labor, materials, tools, equipment, and incidentals, and for doing all the work involved in drilling or coring holes, disposing of the material resulting from drilling or coring holes, and furnishing and placing concrete , complete in place, to the required penetration, as shown on the plans, as specified in the Standard Specifications and these special provisions, and as directed by the Engineer. Reinforcement in cast-in-drilled-hole concrete piling (rock socket) will be paid for by the kilogram as bar reinforcement steel (bridge).

When the elevation of the moderately hard rock surface is lower than anticipated on the bridge plans, the additional cast-in-drilled-hole concrete piling, including inspection pipes, and bar reinforcing steel, required to maintain the length of cast-in-drilled-hole concrete piling (rock socket) into bedrock, as shown on the plans, will be paid for as extra work as provided in Section 4-1.03D, "Extra Work," of the Standard Specifications.

When the elevation of the moderately hard rock surface is higher than anticipated on the bridge plans, the additional rock drilling or coring, required to extend the piling to the specified tip elevation, as shown on the plans, will be paid for as extra work as provided in Section 4-1.03D, "Extra Work," of the Standard Specifications.

Full compensation for conforming to the provisions in "Steel Pipe Piling" and "Nondestructive Testing" of these special provisions shall be considered as included in the contract prices paid for the various items of work involved, and no additional compensation will be allowed therefor.

10-1.25 TIEDOWN ANCHORS

Tiedown anchors in bridge footings; consisting of steel bar tendons with anchorage assemblies that are grouted in cored, formed, and drilled holes; shall conform to the provisions in Section 50, "Prestressing Concrete," of the Standard Specifications, these special provisions, and the details shown on the plans.

Whenever "member" is referred to in Section 50, "Prestressing Concrete," of the Standard Specifications it shall be considered to mean tiedown anchor.

Foundation recommendations are included in the "Materials Information" available to the Contractor in conformance with the provisions in Section 2-1.03, "Examination of Plans, Specifications, Contract, and Site of Work," of the Standard Specifications.

Difficult tiedown installation is anticipated due to the presence of caving soils, hazardous and contaminated materials, high ground water, cobbles and boulders, subsurface concrete debris, rock cuttings, timber piles, low overhead clearance, underground utilities, overhead utilities, and thc requirements of tiedown embedment into rock,.

The Contractor shall determine the bond length necessary to meet acceptance criteria specified herein.

The submittal of microfilms will not be required for tiedown anchor installations.

Alternative details for the anchorage enclosure device may be submitted to the Engineer for approval if necessary to accommodate the anchorage assembly being used.

MATERIALS

The steel tube and bearing plate of the anchorage assembly shall conform to the provisions of Section 75-1.03, "Miscellaneous Bridge Metal," of the Standard Specifications. The steel tube and bearing plate shall be galvanized after fabrication.

Grout shall conform to the provisions in Section 50-1.09, "Bonding and Grouting," of the Standard Specifications. The grout will not be required to pass through a screen with a 1.7 mm maximum clear opening prior to being introduced into the grout pump. Fine aggregate may be added to the grout mixture of portland cement and water outside of the grouted sheathing in drilled holes that are 200 mm or greater in diameter, but only to the extent that the cement content of the grout is not less than 500 kg/m^3 of grout. Fine aggregate, if used, shall conform to the provisions in Section 90-2, "Materials," and Section 90-3, "Aggregate Gradings," of the Standard Specifications.

When a bond breaker is shown on the plans near the bearing plate, the bond breaker shall be a 6 mm premolded joint filler conforming to the provisions in Section 51-1.12C, "Premolded Expansion Joint Fillers," of the Standard Specifications.

Smooth and corrugated plastic sheathing, including joints, shall be watertight. Polyvinyl chloride (PVC) sheathing shall conform to ASTM Designation: D 1784, Class 13464-B. High density polyethylene (HDPE) sheathing shall have a density between 0.940 and 0.960-g/cm^3 as measured in accordance with ASTM Designation: D 792, A-2. Corrugated plastic sheathing shall be PVC or HDPE.

The transition between the corrugated plastic sheathing and the anchorage assembly shall be an approved detail that allows stressing to the design force without evidence of distress in the corrugated plastic sheathing.

Corrugated sheathing for bar tendons shall have a nominal wall thickness of 1.0 mm.

Strand type tendons shall not be used.

CONSTRUCTION

Tiedown anchors shall be installed in accordance with the manufacturer's recommendations. In case of a conflict between the manufacturer's recommendations and these special provisions, these special provisions shall prevail.

Water and grout from tiedown anchor construction operations shall not be permitted to fall on public traffic, to flow across shoulders or lanes occupied by public traffic, or to flow into landscaping, gutters, or other drainage facilities. Excessive amounts of water shall not be used in any of the drilling and the tiedown anchor installation procedures.

The holes drilled in the foundation materials shall be drilled to a depth sufficient to provide the necessary bond length beyond the minimum unbonded length shown on the plans. The

diameter of the hole shall be large enough to provide a minimum of 25 mm grout cover over the corrugated plastic sheathing for the full-length of the tendon. Centralizers shall be used full-length of the tendon.

Tiedown anchor holes in foundation material shall be drilled by either the rotary or percussion drilling method.

Prior to installing each tiedown anchor into the anchor hole, the anchor shall be clean and free of oil, grease, dirt, or other extraneous substance.

The transition between the corrugated plastic sheathing and the anchorage assembly shall be an approved detail that allows stressing to the design force without evidence of distress in the corrugated plastic sheathing.

Tiedown anchor steel shall be protected prior to completion of all grouting against rust, corrosion, and physical damage in conformance with the provisions in Section 50, "Prestressing Concrete," of the Standard Specifications. In addition, there shall be no evidence of distress in the plastic sheathing or crushing of the cement grout within the sheathing.

Pregrouting shall occur at least 48 hours before placing the tendon in the drilled hole.

Tiedown anchor grout placed in the drilled hole shall be placed using grout tubes.

Grout for all stages shall be injected at the low end of the void being filled and shall be expelled at the high end until there is no evidence of entrapped air, water, or diluted grout.

After initial grouting, the tiedown anchor shall remain undisturbed until the grout has reached a strength sufficient to provide anchorage during load testing.

Secondary grouting shall be completed after the tiedown anchor has been locked off at the required load.

The bar tendons in the unbonded area shall be sheathed with smooth plastic that extends into the steel tube of the permanent tiedown anchorage assembly, as shown on the plans. For this portion of smooth sheathing there is no minimum wall thickness and the sheathing shall be either PVC or HDPE.

In addition, bar tendons shall be sheathed full-length with corrugated plastic where shown on the plans. The annular space between the bar and the corrugated sheathing shall be pregrouted prior to placing the tendons in the drilled hole.

There shall be a seal between the smooth sheathing and the corrugated sheathing at the top and bottom of the length of smooth sheathing.

For bar tendons, the initial grout in the drilled hole may be placed before or after insertion of the bar tendons.

For drilled holes 150 mm in diameter or less, the initial grouting outside of the corrugated plastic sheathing shall extend to 600 mm below the end of the steel tube of the anchorage assembly. For drilled holes greater than 150 mm in diameter the initial grouting outside of the corrugated plastic sheathing shall be within the limits of the bonded length.

Testing

All tiedowns shall be load tested by either a performance test or a proof test. The magnitude of applied test loads shall be determined with a calibrated pressure gauge or a load cell. Movements of the end of the tiedown anchor, relative to an independent fixed reference point, shall be measured and recorded to the nearest 0.025-mm at each load increment during the load tests. The Contractor shall perform the measuring and recording.

At the completion of testing tiedown anchors, or when requested by the Engineer, the Contractor shall furnish to the Engineer complete test results for each tiedown anchor tested.

CONTRACT NO. 04-0120R4

CONTRACT CHANGE ORDER NO 73

SHEET ___ OF ___

Data for each test shall list key personnel, test loading equipment, tiedown anchor location, hole diameter, method of drilling, and bonded and unbonded length of tiedown anchor. Test data shall also list quantity of grout and grout pressure used within the bonded length of the tiedown anchor, amount of ground water encountered, the time and dates of drilling, tiedown anchor installation, grouting, and testing. The tiedown anchor end movements at each increment of load or at each increment of time during the load hold period of the loading schedule shall be included in the test data.

Load testing shall be performed against temporary bearing yokes that bear directly against the permanent bearing plate. Tiedown anchors shall not be stressed against new footing concrete until the concrete has attained a compressive strength of 18 MPa. Temporary yokes shall remain the property of the Contractor.

A minimum of 10 percent of the total number of tiedown anchors, but not less than two anchors shall be performance tested at each footing. The Engineer shall determine the location of the tiedown anchors to be performance tested.

The performance test or proof test shall be conducted by measuring the test load applied to the tiedown anchor and recording the tiedown anchor end movement (measured at the end of the tiedown anchor) during incremental loading and unloading the tiedown anchor in accordance with the loading schedule. The test load shall be held constant for 10 minutes. During the load hold, the movement of the end of the tiedown anchor shall be measured at 1, 2, 3, 4, 5, 6, and 10 minutes. If the total recorded movement between one minute and 10 minutes exceeds 1.0 mm, the test load shall be held for an additional 50 minutes. Total movement shall be measured at 15, 20, 25, 30, 45, and 60 minutes. If the load is held for 60 minutes, a creep curve showing the creep movement between one minute and 60 minutes shall be plotted as a function of the logarithm of time.

LOADING SCHEDULES		
PERFORMANCE TEST		PROOF TEST
	(CONT'D)	
AL	AL	AL
0.25T	0.25T	0.25T
AL	0.50T	0.50T
0.25T	0.75T	0.75T
0.50T	1.00T	1.00T
AL	1.25T	1.25T
0.25T	AL	1.50T (TEST LOAD)
0.50T	0.25T	AL
0.75T	0.50T	
AL	0.75T	
0.25T	1.00T	
0.50T	1.25T	
0.75T	1.50T (TEST LOAD)	
1.00T (CONT'D)	AL	
T = Design force for the anchor shown on the plans		
AL = Alignment load		

For performance and proof tests, each increment of load shall be applied in less than one minute and held for at least one minute but not more than 2 minutes or as specified above. The

CONTRACT NO. 04-0120R4
CONTRACT CHANGE ORDER NO 73
SHEET 113 OF 280

observation period for the load hold shall start when the pump begins to apply the last increment of load.

The jacking equipment, including the tiedown anchor movement measuring system, shall be stable during all phases of the tiedown anchor loading operations.

All tiedown anchors not performance tested shall be proof tested. If 1.5 times the design force cannot be obtained, the tiedown anchor shall be replaced. Tiedown anchors shall not be retested unless the tiedown bond length is post-grouted after the unacceptable test.

A performance tested or proof tested tiedown anchor shall conform to the following acceptance criteria:

A. The measured elastic movement of the end of the tiedown tendon exceeds 0.80 of the theoretical elongation of the unbonded length plus the jacking length at the maximum test load; and
B. The creep movement of the end of the tiedown anchor, between one and 10 minutes, is less than 1.0 mm.

Lock-off

After successful testing of the tiedown anchors, the tiedown anchors shall be locked off at the force shown on the plans. The lock-off force is the load on the jacks that is maintained while the tiedown anchor head or anchor nuts on the tiedown anchor are permanently set. Immediately after lock-off, a lift-off test shall be performed to demonstrate that the specified lock-off force was obtained. Adjustments in the shim thickness shall be made if required to achieve the specified lock-off force.

After lock-off, the grout shall be extended to the secondary grout level shown on the plans. At least 24 hours after the secondary grout has set, the remaining void in the steel tube and bearing plate shall be filled with grout. Grout shall be injected at the low end and expelled at the high end until there is no evidence of entrapped air or water. A minimum grout head of 600 mm shall be maintained until the grout has set.

MEASUREMENT AND PAYMENT

No payment will be made for tiedown anchors that do not pass the specified testing requirements.

Tiedown anchors will be measured and paid for by the unit, and the number for payment will be determined by the requirements of the details shown on the plans.

The contract unit price paid for tiedown anchor shall include full compensation for furnishing all labor, materials, tools, equipment, and incidentals, and for doing all the work involved in constructing the tiedown anchors (including testing), complete in place, as shown on the plans, as specified in the Standard Specifications and these special provisions, and as directed by the Engineer.

10-1.25 CONCRETE STRUCTURES

Portland cement concrete structures shall conform to the provisions in Section 51, "Concrete Structures," of the Standard Specifications and these special provisions.

Shotcrete shall not be used as an alternative construction method for reinforced concrete members unless otherwise specified.

CONTRACT NO. 04-0120R4

CONTRACT CHANGE ORDER NO 73

SHEET 114 OF 280

In particularly congested areas of the structures, such as the columns, a maximum combined aggregate grading of 12.5-mmconforming to the requirements in Section 90-3, "Aggregate Gradings," of the Standard Specifications may be used when approved by the Engineer.

MASS CONCRETE

Mass concrete shall conform to the requirements of Section 90, "Portland Cement Concrete," of the Standard Specifications and these special provisions. Mass concrete construction shall include modeling, providing temperature control and monitoring during placement.

Components listed in the table below shall be considered mass concrete:

Location	Mass Concrete Components
Bents W3L, W4L, W5L, W6L, W3R, W4R, W5R, W6R (North), and Bent 7	Footing

The Contractor shall control the internal and surface temperature of mass concrete during curing in accordance with the Thermal Control Plan specified herein. Temperature modeling and temperature monitoring is required for the placement of mass concrete. The maximum internal temperature of the mass concrete once placed shall not exceed 65°C and the maximum temperature difference between any surface of the mass concrete and the calculated hottest point will be controlled as described in the Thermal Control Plan.

The concrete temperature shall be monitored by thermocouples or other temperature sensors placed into the concrete, as required in the Thermal Control Plan. Use of ice, liquid nitrogen, insulated curing blankets, insulated forms, cooling pipes and other measures may be necessary to satisfy the temperature requirements.

Materials

Cementitious material for mass concrete may be a combination of mineral admixture conforming to Section 90-2.04 of the Standard Specifications and portland cement or a combination of slag cement mineral admixture conforming to Grade 100 or 120 of ASTM Designation: C989 and portland cement.

The cement content for mass concrete not containing slag cement mineral admixtures shall be a minimum of 50 percent by mass, and the content of mineral admixture conforming to Section 90-2.04 of the Standard Specifications shall be a maximum of 50 percent by mass, of the cementitious material content.

The cement content for mass concrete containing a slag cement mineral admixture shall be a minimum of 40 percent by mass, and the content of slag cement mineral admixture shall be from 40 percent to 60 percent by mass of the total cementitious material to be used in the mix.

Whenever the cementitious material content of mass concrete is composed of more than 35% mineral admixture by mass as provided in these special provisions, an additional 62 days will be allowed to obtain the specified compressive strength shown on the plans.

CONTRACT NO. 04-0120R4

CONTRACT CHANGE ORDER NO 73

SHEET 117 OF 280

Thermal Control Plan

Prior to commencing any mass concrete placement, the Contractor shall submit a Thermal Control Plan with design calculations in conformance with the provisions in "Working Drawings" of these special provisions to the Engineer for approval for each mass concrete structure component. The number of sets of the Thermal Control Plan and design calculations shall be the same as those specified for falsework working drawings in Section 51-1.06A, "Falsework Design and Drawings," of the Standard Specifications. After the final Thermal Control Plan is submitted, the Contractor shall allow the Engineer 20 working days for review and acceptance. The Thermal Control Plan shall be based on the design assumption that cracking of the concrete as a result of heat of hydration shall not occur. Analysis shall be performed to determine the maximum allowable temperature differentials between the hottest point of the concrete and the exterior faces. The Thermal Control Plan shall include the following:

A. Mix design.
B. Duration and method of curing.
C. Procedures to control concrete temperature at time of placement.
D. Methods of controlling temperature differentials.
E. Temperature sensor types and locations.
F. Temperature monitoring and recording system.
G. Dimensions of each typical mass concrete placement, including all locations in the structure to be represented by that placement.
H. Types and dimensions of materials to be used for mass concrete forms and insulation, and time frames for when the concrete forms and insulation will be removed, including time periods for removal and reinstallation of insulation where required as part of the thermal control plan
I. Assumptions for average ambient air and average surface rock temperature for time period of placement and curing of each typical mass concrete element.
J. If multiple lifts with time delay are proposed, provide lift height and define time delay between lifts.
K. Include a placing diagram showing the typical mass concrete placement sequence and construction joint locations, if any.
L. Identify areas where steep cooling gradients may occur, and how cracking will be avoided.
M. Predict peak temperature, peak differential temperatures and at what approximate times they will occur.
N. Define allowable time periods for placing or removing insulation and or forms.
O. A summary of the modeling assumptions used in the analysis.
P. Field measures to ensure conformance with the maximum concrete temperature and temperature differential requirements.
Q. Identify contingency operations to be implemented to control the internal temperature of the concrete should the maximum allowable or the maximum allowable differential temperature be exceeded. For post cooling systems after the peak internal temperature is reached, include the maximum cooling rate at which cracking will not occur.

110 CONTRACT NO. 04-0120R4

CONTRACT CHANGE ORDER NO 73

Temperature modeling for each typical placement shall be included with each thermal control plan submittal. As a minimum, the modeling for each typical placement shall consist of performing a two-dimensional finite-difference analysis (see ACI 207.1R-96). The analysis shall be based on the Contractor's actual mix designs. The coefficient of thermal expansion of the concrete used in the modeling shall be determined by testing of the proposed mixes in accordance with US Army Corps of Engineer's Method CRD-C39-81, "Test Method of Coefficient of Linear Thermal Expansion of Concrete." The heat of hydration used in the modeling for the cementitious blend used in the proposed mix designs shall be tested at 1, 3, 7, and 28 days in accordance with the requirements in ASTM Designation: C 186, "Heat of Hydration of Hydraulic Cement".

Construction

Prior to mass concrete placement, an engineer for the Contractor who is registered as a Civil Engineer in the State of California shall inspect and test the temperature monitoring and recording system. The Contractor's registered engineer shall be present at the jobsite when the mass concrete operation is in progress and shall report to the Engineer in writing on a daily basis the progress of the operation. A copy of the daily report shall be available at the jobsite.

If the Contractor elects to use a mechanical cooling system, the mechanical cooling system shall be designed in conformance with the Thermal Control Plan and the following requirements:

A. The mechanical cooling system shall be embedded within mass concrete elements and surface connections to cooling pipes shall be removable to a depth of 100 mm from the surface.
B. Aluminum, copper, or any other dissimilar metal that can cause a corrosion cell with the steel reinforcing shall not be used as cooling pipes.
C. Forms shall be designed so that removal of the forms shall not disrupt the cooling or temperature monitoring.
D. Cooling pipes shall not break or deform during mass concrete placement and shall be secured to prevent movement. Damaged cooling pipes shall be removed and replaced immediately.
E. The mechanical cooling system shall be pressure tested in the presence of the Engineer at 120 percent of the maximum service pressure. The test pressure shall be held for 15 minutes. All leaks shall be repaired and the cooling pipe system shall be retested by the Contractor until the system is free of leaks.
F. After cooling is completed the cooling water shall be discharged and the cooling pipes shall be thoroughly flushed with potable water. Cooling water and wash water shall be discharged in conformance with "Non-Storm Water Discharges" of these special provisions.
G. After the mechanical cooling system is no longer needed the cooling pipes shall be fully grouted under pressure with a nonshrink grout mixture in conformance with ASTM Designation: C 1107 and ASTM Designation: C 827 for 0.0 percent shrinkage, and 0.0 percent minimum and 4.0 percent maximum expansion. The placement of nonshrink grout shall be in conformance with the manufacturer's recommendations.
H. After surface connections to the cooling pipes are removed, the holes shall be reamed and filled with mortar conforming to Section 51-1.135, "Mortar," of the Standard Specifications.

CONTRACT NO. 04-0120R4

CONTRACT CHANGE ORDER NO 73

The Contractor may use seawater as cooling water provided that the final temperature of the seawater before discharging back into the bay does not exceed the permit requirements. Holding tanks may be used to cool the water to the required temperature before discharging back into the bay.

The Contractor shall house the pump intake in a manner that prevents injury to fish or other aquatic species and prevent fish entrapment.

Temperature sensors shall be located such that the maximum temperature difference within a mass concrete element can be monitored. As a minimum, the concrete temperature shall be monitored at the calculated hottest point of the concrete, on at least two vertical faces, two corners, and at the center of the top and bottom faces of each pour. For all mass concrete placements, air temperature shall be measured and recorded. If a post-cooling system is used, inlet and outlet water temperatures shall be measured and recorded. The outlet sensors shall be placed within 75 mm of the concrete surface.

Temperature readings shall be automatically recorded on an hourly basis. A redundant set of sensors shall be installed near the primary set. Provision shall be made for recording the redundant set, but records of the redundant sensors need not be made if the primary set is operational. Temperature monitoring may be discontinued when the maximum internal temperature is falling, the maximum allowable temperature difference is greater than the difference between the interior concrete temperature and the average daily temperature for three consecutive days, and there are no mass concrete elements to be cast adjacent.

Methods of concrete consolidation shall prevent damage to the temperature monitoring and recording system. Wiring from thermocouples that must be cast into the concrete shall be protected to prevent movement. Wire runs shall be as short as possible. The ends of the temperature sensors shall not come into contact with either a support or concrete form, or bar reinforcing steel. Temperature monitoring equipment shall be capable of printing and storing data and shall be able to download monitoring data to a computer. Data shall be downloaded and submitted daily to the Engineer.

After the mass concrete pour has been topped out and finished, it shall be revibrated and refinished. Revibration shall extend below the top mat of reinforcement and shall be done as late as the concrete will again respond to vibration. For concrete pours without top reinforcement, revibration shall extend to a depth of 150 mm.

During monitoring, should the specified maximum internal temperature of the mass concrete be exceeded or the maximum allowable temperature difference between any surface of the mass concrete and the hottest point be exceeded, the Contractor shall take immediate measures to correct the situation as specified in the Thermal Control Plan. At the completion of monitoring, the actual readings for the mass concrete element shall be compared with those predicted by the modeling and a summary report shall be prepared by the Contractor's engineer. The report shall include all supplementary or contingency measures implemented and suggested corrections to any future modeling or monitoring to be performed. The summary report shall contain all the temperature data collected for each instrument, both in hard copy and in digital form on diskette. Digital data shall be in Microsoft Excel format or as otherwise approved by the Engineer. The summary report shall also have the data shown in a graphical format with all instruments for a given mass concrete element shown on the same page with time as the horizontal axis. The summary report shall be submitted within one week of completing the monitoring of the mass concrete element.

CONTRACT NO. 04-0120R4

CONTRACT CHANGE ORDER NO 73

SHEET 120 OF 280

Acceptance

Mass concrete shall conform to the concrete acceptance criteria and the following temperature requirements:

A. The maximum allowable temperature of mass concrete shall not exceed 65°C.
B. The maximum temperature differential of mass concrete shall not exceed the requirement as determined in the Thermal Control Plan.

If the Contractor fails to conform to any of the temperature requirements above, the mass concrete elements will be rejected. The rejected mass concrete shall be removed at the Contractor's expense. The Contractor shall modify the Thermal Control Plan and design calculations to correct the problem and resubmit the revised Thermal Control Plan.

The Contractor shall allow the Engineer 2 weeks for review and approval of the revised Thermal Control Plan. Mass concrete placement shall not begin until the Engineer has approved the revised Thermal Control Plan. No extension of time or compensation will be made for any rejected mass concrete element or revisions of the Thermal Control Plan.

The Contractor shall remove all equipment and materials from the mass concrete element and clean the surface for the Engineer to measure the crack intensity. Surface crack intensity will be determined after monitoring shows the maximum internal temperature has dropped to within 5°C of the outer concrete temperature. Cracking shall be considered excessive if a surface crack intensity on any face of a concrete surface where cracks greater than 0.15 mm in width measure more than 1.0 m in cumulative length within any 2 m square area or where individual cracks greater than 0.15 mm in width measure more than 300 mm in length.

In case of excessive cracking, the Contractor shall suspend further work on members of similar size and configuration, submit a written explanation of the thermal cracking and additional steps to be taken in future to eliminate excessive cracking, and submit proposed modifications in writing to the Engineer for review. Concrete placement shall not be resumed until the Engineer approves the proposed modifications.

Cracks greater than 0.15 mm in width shall be repaired. Cracks greater than 0.15 mm in width and longer than 300 mm shall be filled with pressure-injected epoxy. Cracks to be filled shall be cleaned and filled by pressure injection methods so that all portions of the crack are completely filled with epoxy. No repairs shall begin until the Engineer has approved the repair plan.

Core drilling may be necessary, as determined by the Engineer and at the Contractor's expense, to sample and examine the extent of the cracking and crack filling. The minimum depth of core sampling for mass concrete shall be 0.6 m and the number of cores taken per mass concrete element shall be in accordance with ASTM Designation: C 823. Prior to coring, the Contractor shall identify the location of the main reinforcing steel. The holes shall be cored by methods that will not shatter or damage the concrete adjacent to the holes. Water for core drilling operations shall be fresh water. The coring water shall be disposed in conformance with the requirements in "Non-Storm Water Discharges" of these special provisions. Immediately after coring, the concrete cores shall be identified by the Contractor with a description of the core locations and submitted to the Engineer for inspection.

If any reinforcement is cut during coring, coring operations shall be terminated, and the Contractor shall submit to the Engineer for approval, the procedure proposed to repair the cut

reinforcement and to prevent further cutting of reinforcement. All cored holes shall be filled with nonshrink grout. Cracks not showing full penetration with epoxy shall be reinjected.

Full compensation for conforming to the above requirements shall be considered as included in the contract prices paid for the various contract items of work involved and no additional compensation will be allowed therefor.

MEASUREMENT AND PAYMENT

Measurement and payment for concrete in structures shall conform to the provisions in Section 51-1.22, "Measurement," and Section 51-1.23, "Payment," of the Standard Specifications and these special provisions.

10-1.26 REINFORCEMENT

Reinforcement shall conform to the provisions in Section 52, "Reinforcement," of the Standard Specifications and these special provisions.

The Department's mechanical splices prequalified list can be found at the following internet site:

http://www.dot.ca.gov/hq/esc/approved_products_list/

The provisions of "Welding Quality Control" of these special provisions shall not apply to resistance butt welding.

MEASUREMENT AND PAYMENT

Measurement and payment for reinforcement in structures shall conform to the provisions in Section 52-1.10, "Measurement," and Section 52-1.11, "Payment," of the Standard Specifications and these special provisions.

Full compensation for couplers as shown on the plans shall be considered as included in the contract price paid per kilogram for bar reinforcing steel (bridge) and no additional compensation will be allowed therefor.

10-1.27 ROADSIDE SIGNS

Roadside signs shall be furnished and installed at the locations shown on the plans or where designated by the Engineer and in conformance with the provisions in Section 56-2, "Roadside Signs," of the Standard Specifications and these special provisions.

The Contractor shall furnish roadside sign panels in conformance with the provisions in "Furnish Sign" of these special provisions.

Wood posts shall be pressure treated after fabrication in conformance with the provisions in Section 58, "Preservative Treatment of Lumber, Timber and Piling," of the Standard Specifications and AWPA Use Category System: UC4A, Commodity Specification A or B.Type N, Type P, and Type R marker panels mounted on a post with a roadside sign shall be considered to be sign panels and will not be paid for as markers.

10-1.28 FURNISH SIGN

Signs shall be fabricated and furnished in accordance with details shown on the plans, the Traffic Sign Specifications, and these special provisions.

Traffic Sign Specifications for California sign codes are available for review at the Department's internet site:

http://www.dot.ca.gov/hq/traffops/signtech/signdel/specs.htm

Traffic Sign Specifications for signs referenced with Federal MUTCD sign codes can be found in Standard Highway Signs Book, administered by the Federal Highway Administration, which is available for review at the following Internet website:

http://mutcd.fhwa.dot.gov/ser-pubs.htm

Information on cross-referencing California sign codes with the Federal MUTCD sign codes is available at the Department's internet site:

http://www.dot.ca.gov/hq/traffops/signtech/signdel/specs.htm

Temporary or permanent signs shall be free from blemishes that may affect the serviceability and detract from the general sign color and appearance when viewing during daytime and nighttime from a distance of 8 m. The face of each finished sign shall be uniform, flat, smooth, and free of defects, scratches, wrinkles, gel, hard spots, streaks, extrusion marks, and air bubbles. The front, back, and edges of the sign panels shall be free of router chatter marks, burns, sharp edges, loose rivets, delaminated skins, excessive adhesive over spray and aluminum marks.

QUALITY CONTROL FOR SIGNS

The requirements of "Quality Control for Signs" in this section shall not apply to construction area signs.

No later than 14 days before sign fabrication, the Contractor shall submit a written copy of the quality control plan for signs to the Transportation Laboratory, Materials Engineering and Testing Services (METS), Telephone (916) 227-7291. METS will have 10 days to review the quality control plan. Sign fabrication shall not begin until METS approves the Contractor's quality control plan in writing. The Contractor shall submit to the Engineer at least 3 copies of the approved quality control plan. The quality control plan shall include, but not be limited to the following requirements:

1. Identification of the party responsible for quality control of signs,
2. Basis of acceptance for incoming raw materials at the fabrication facility,
3. Type, method and frequency of quality control testing at the fabrication facility,
4. List (by manufacturer and product name) of process colors, protective overlay film, retroreflective sheeting and black non-reflective film,
5. Recommended cleaning procedure for each product,
6. Method of packaging, transport and storage for signs.

No legend shall be installed at the project site. Legend shall include letters, numerals, tildes, bars, arrows, route shields, symbols, logos, borders, artwork, and miscellaneous characters. The style, font, size, and spacing of the legend shall conform to the Standard Alphabets published in

the FHWA Standard Highway Signs Book. The legend shall be oriented in the same direction in accordance with the manufacturer's orientation marks found on the retroreflective sheeting.

On multiple panel signs, legend shall be placed across joints without affecting the size, shape, spacing, and appearance of the legend. Background and legend shall be wrapped around interior edges of formed panel signs as shown on plans to prevent delamination.

The following notation shall be placed on the lower right side of the back of each sign where the notation will not be blocked by the sign post or frame:

1. PROPERTY OF STATE OF CALIFORNIA.
2. Name of the sign manufacturer.
3. Month and year of fabrication.
4. Type of retroreflective sheeting
5. Manufacturer's identification and lot number of retroreflective sheeting.

The above notation shall be applied directly to the aluminum sign panels in 6-mm upper case letters and numerals by die-stamp and applied by similar method to the fiberglass reinforced plastic signs. Painting, screening, or engraving the notation will not be allowed. The notation shall be applied without damaging the finish of the sign.

Signs with a protective overlay film shall be marked with a dot of 10 mm diameter. The dot placed on white border shall be black while the dot placed on black border shall be white. The dot shall be placed on the lower border of the sign before application of the protective overlay film and shall not be placed over the legend and bolt holes. The application method and exact location of the dot shall be determined by the manufacturer of the signs.

For sign panels that have a minor dimension of 1220 mm or less, no splice will be allowed in the retroreflective sheet except for the splice produced during the manufacturing of the retroreflective sheeting. For sign panels that have a minor dimension greater than 1220 mm, only one horizontal splice will be allowed in the retroreflective sheeting.

Unless specified by the manufacturer of the retroreflective sheeting, splices in retroreflective sheeting shall overlap by a minimum of 25 mm. Splices shall not be placed within 50 mm from edges of the panels. Except at the horizontal borders, the splices shall overlap in the direction from top to bottom of the sign to prevent moisture penetration. The retroreflective sheeting at the overlap shall not exhibit a color difference under the incident and reflected light.

Signs exhibiting a significant color difference between daytime and nighttime shall be replaced immediately at the Contractor's expenses.

Repairing sign panels will not be allowed except when approved by the Engineer.

The Department will inspect signs at the Contractor's facility and delivery location, and in accordance with Section 6, "Control of Materials," of the Standard Specifications. The Engineer will inspect signs for damage and defects before and after installation.

Regardless of kind, size, type, or whether delivered by the Contractor or by a common carrier, signs shall be protected by thorough wrapping, tarping, or other methods to ensure that signs are not damaged by weather conditions and during transit. Signs shall be dry during transit and shipped on palettes, in crates, or tier racks. Padding and protective materials shall be placed between signs as appropriate. Finished sign panels shall be transported and stored by method that protects the face of signs from damage. The Contractor shall replace wet, damaged, and defective signs at the Contractor's expense.

Signs shall be stored in dry environment at all times. Signs shall not rest directly on the ground or become wet during storage. Signs, whether stored indoor or outdoor, shall be in free

standing. When stored outdoor, signs shall be placed at a minimum spacing of 100 mm apart. In areas of high heat and humidity signs shall be stored in enclosed climate-controlled trailers or containers. Signs shall be stored indoor if duration of the storage will exceed 30 days.

Screen processed signs shall be protected, transported and stored as recommended by the manufacturer of the retroreflective sheeting.

When requested, the Contractor shall provide the Engineer test samples of signs and materials used at various stages of production. Sign samples shall be 300 mm x 300 mm in size with applied background, letter or numeral, and border strip.

The Contractor shall assume the costs and responsibilities resulting from the use of patented materials, equipment, devices, and processes for the Contractor's work.

SHEET ALUMINUM

Alloy and temper designations for sheet aluminum shall be in accordance with ASTM Designation: B209.

The Contractor shall furnish the Engineer a Certificate of Compliance in accordance to Section 6-1.07, "Certificates of Compliance," of the Standard Specifications for the sheet aluminum.

Sheet aluminum shall be pretreated in accordance to ASTM Designation: B449. Surface of the sheet aluminum shall be cleaned, deoxidized, and coated with a light and tightly adherent chromate conversion coating free of powdery residue. The conversion coating shall be Class 2 with a mass between 108 mg/m^2 and 377 mg/m^2, and an average mass of 269 mg/m^2. Following the cleaning and coating process, the sheet aluminum shall be protected from exposure to grease, oils, dust, and contaminants.

Sheet aluminum shall be free of buckles, warps, dents, cockles, burrs, and defects resulting from fabrication.

Base plate for standard route marker shall be die cut.

RETROREFLECTIVE SHEETING

The contractor shall furnish retroreflective sheeting for sign background and legend in accordance with ASTM Designation: D4956 and "Prequalified and Tested Signing and Delineation Materials" of these special provisions.

Retroreflective sheeting shall be applied to sign panels as recommended by the retroreflective sheeting manufacturer without stretching, tearing, and damage.

Class 1, 3, or 4 adhesive backing shall be used for Type II, III, IV, VII, VIII, and IX retroreflective sheeting. Class 2 adhesive backing may also be used for Type II retroreflective sheeting. The adhesive backing shall be pressure sensitive and fungus resistant.

When the color of the retroreflective sheeting determined from instrumental testing is in dispute, the Engineer's visual test will govern.

PROCESS COLOR AND FILM

The Contractor shall furnish and apply screened process color, non-reflective opaque black film, and protective overlay film of the type, kind, and product that are approved by the manufacturer of the retroreflective sheeting.

The Contractor shall furnish the Engineer a Certificate of Compliance in accordance to Section 6-1.07, "Certificates of Compliance," of the Standard Specifications for the screened process color, non-reflective opaque black film, and protective overlay film.

The surface of the screened process color shall be flat and smooth. When the screened process colors determined from the instrumental testing in accordance to ASTM Designation: D4956 are in dispute, the Engineer's visual test will govern.

The Contractor shall provide patterns, layouts, and set-ups necessary for the screened process.

The Contractor may use green, red, blue, and brown reverse-screened process colors for background and non-reflective opaque black film or black screened process color for legend. The coefficient of retroreflection for reverse-screened process colors on white retroreflective sheeting shall not be less than 70 percent of the coefficient of retroreflection specified in ASTM Designation: D4956.

The screened process colors and non-reflective opaque black film shall have the same outdoor weatherability as that of the retroreflective sheeting.

After curing, screened process colors shall withstand removal when tested by applying 3M Company Scotch Brand Cellophane Tape No. 600 or equivalent tape over the color and removing with one quick motion at 90°angle.

10-1.29 ALTERNATIVE PIPE

Alternative pipe culverts shall conform to the provisions in Section 62, "Alternative Culverts," of the Standard Specifications and these special provisions.

10-1.30 PLASTIC PIPE

Plastic pipe shall conform to the provisions in Section 64, "Plastic Pipe," of the Standard Specifications and these special provisions.

10-1.31 REINFORCED CONCRETE PIPE

Reinforced concrete pipe shall conform to the provisions in Section 65, "Reinforced Concrete Pipe," of the Standard Specifications and these special provisions.

Where embankment will not be placed over the top of the pipe, a relative compaction of not less than 85 percent shall be required below the pipe spring line for pipe installed using Method 1 backfill in trench, as shown on Standard Plan A62D. Where the pipe is to be placed under the traveled way, a relative compaction of not less than 90 percent shall be required unless the minimum distance between the top of the pipe and the pavement surface is the greater of 1.2 m or one half of the outside diameter of the pipe.

Except as otherwise designated by classification on the plans or in the specifications, joints for culvert and drainage pipes shall conform to the plans or specifications for standard joints.

When reinforced concrete pipe is installed in conformance with the details shown on Standard Plan A62DA, the fifth paragraph of Section 19-3.04, "Water Control and Foundation Treatment," of the Standard Specifications shall not apply.

When solid rock or other unyielding material is encountered at the planned elevation of the bottom of the bedding, the material below the bottom of the bedding shall be removed to a depth of 1/50 of the height of the embankment over the top of the culvert, but not less than 150 mm nor more than 300 mm. The resulting trench below the bottom of the bedding shall be backfilled with structure backfill material in conformance with the provisions in Section 19-3.06, "Structure Backfill," of the Standard Specifications.

The excavation and backfill below the planned elevation of the bottom of the bedding will be paid for as extra work as provided in Section 4-1.03D, "Extra Work," of the Standard Specifications.

The Outer Bedding shown on Standard Plan A62DA shall not be compacted prior to placement of the pipe.

10-1.32 CORRUGATED METAL PIPE

Corrugated steel pipe culverts shall conform to the provisions in Section 66, "Corrugated Metal Pipe," of the Standard Specifications and these special provisions.

Attention is directed to "Earthwork" and "Controlled Low Strength Material" of these special provisions regarding structure backfill for pipe culverts.

Asphaltic mastic coating or polymeric sheet coating substituted for bituminous coating shall be placed on the outside and inside surfaces of the pipe.

Timber bulkheads shall be constructed and placed across the ends of unconnected alternative pipe culverts as shown on the plans. Wood for timber bulkheads shall be construction heart grade redwood at least 25 mm thick. Full compensation for constructing and placing timber bulkheads shall be considered as included in the contract price paid per meter for the size of alternative pipe culverts involved and no separate payment will be made therefor.

Pipe reducers will be measured and paid for by the meter as the corrugated metal pipe of the larger diameter connected to the reducer.

10-1.33 WELDED STEEL PIPE

Welded steel pipe shall conform to the provisions in Section 70, "Miscellaneous Facilities," of the Standard Specifications and these special provisions.

Wrapping will not be required.

10-1.34 BRIDGE DECK DRAINAGE SYSTEM

Bridge deck drainage systems shall conform to the provisions for miscellaneous bridge metal in Section 75, "Miscellaneous Metal," of the Standard Specifications and these special provisions.

Self-tapping screws used for sleeve connections shall be hex-head stainless steel, installed in holes drilled to fit the self-tapping screws, conforming to the requirements of ASTM Designation: A 276, Type 316.

At the Contractor's option, fiberglass pipes and fittings with the same diameter and minimum bend radius as those shown on the plans, may be substituted for welded steel pipe in deck drain systems.

Fiberglass pipe and fittings shall conform to the requirements in ASTM Designation: D 2996, and shall have a minimum short-term rupture strength of 207 MPa. The adhesive type recommended by the manufacturer shall be used for joining pipe and fittings. Fiberglass pipe not enclosed in a box girder cell or encased in concrete shall be manufactured from ultraviolet-resistant resin pigmented with concrete-gray color, or be coated with a concrete-gray resin-rich exterior coating. Paint shall not be used. Fiberglass pipe treated with ultraviolet protection shall withstand a minimum of 2500 hours of accelerated weathering when tested in conformance with the requirements in ASTM Designation: G 154. Lamps shall be UV-B (313 nm wavelength). The resting cycle shall be 4 hours of ultraviolet exposure at 60°C, and then 4 hours of condensate

exposure at 50°C. After testing, the surface of the pipe shall exhibit no fiber exposure, crazing, or checking, and only a slight chalking or color change.

Support spacing for fiberglass pipe shall be the same as shown on the plans for welded steel pipe. Pipe supports shall have a width of not less than 38 mm.

A Certificate of Compliance for fiberglass pipe and fittings shall be furnished to the Engineer in conformance with the provisions in Section 6-1.07, "Certificates of Compliance," of the Standard Specifications. The Certificate of Compliance shall include all laboratory test results conforming to the provisions specified herein.

For drainage piping NPS 8 or smaller, which is: (1) enclosed in a box girder cell and exposed for a length not greater than 6 m within the cell, or (2) encased in concrete, the Contractor shall have the option of substituting polyvinyl chloride (PVC) plastic pipe and fittings, with the same diameter and minimum bend radius as shown on the plans, for welded steel pipe.

The PVC plastic pipe and fittings shall be Schedule 40 conforming to the requirements of ASTM Designations: D 1785. The maximum support spacing for PVC plastic pipe shall be 2 m.

Couplings used to connect PVC plastic pipe or fiberglass pipe to steel shall be threaded or flanged. The sleeve connections shown on the plans shall not be used for either PVC plastic pipe or fiberglass pipe.

If PVC plastic pipe or fiberglass pipe is substituted for welded steel pipe, the quantity of drainage piping will be computed on the basis of the dimensions and details shown on the plans, and no change in the quantities to be paid for will be made because of the use of PVC plastic pipe or fiberglass pipe.

Bridge deck drainage systems will be measured and paid for by the kilogram in the same manner specified for miscellaneous metal (bridge) in Section 75-1.06, "Measurement," and Section 75-1.07, "Payment," of the Standard Specifications.

10-1.35 COMPRESSED AIR PIPE

Steel pipe for compressed air shall conform to the requirements in ASTM Designation: A 53 (Grade B), standard weight, galvanized, except that the zinc coating shall be not less than 90 percent of the amount specified in that ASTM Designation. Fittings, shall be galvanized malleable iron, banded and threaded, conforming to the requirements in ANSI standard: B16.3, Class 150. The pipe ends shall be grooved to accept mechanical couplings.

Mechanical Coupling

Mechanical couplings shall be galvanized iron body, 2-piece type with zinc electroplated bolts. The coupling shall allow 6.4 mm end separation and a minimum of 1 degree of angular deflection. The couplings shall have a minimum pressure rating of 5500 kPa. Rigid couplings and flange adaptors shall match the mechanical couplings except that the pressure rating for the flange adaptors and rigid couplings shall be a minimum of 2000 kPa.

10-1.36 WATER MAINS

PART 1-GENERAL

SUMMARY

Scope.-This work shall consist of furnishing and installing water main for US Navy (200 mm) complete with pipes, fittings, valves, accessories and incidentals necessary to complete the work for a ready to operate domestic water distribution system.

The work includes excavating, trenching, backfilling, pavement restoration and testing with the exception of disinfection for water main for US Navy, in accordance with the details shown on the plans, as specified in the Standard Specifications, and these special provisions.

For US Navy, the San Francisco Public Utilities Commission/Water Department (SFWD) is the jurisdictional water utility district.

Attention is directed to "Obstructions," of these special provisions, regarding schedule and coordination for the installation of SFWD water mains.

SFWD Work

SFWD will make all connections and disconnections to and from the existing US Navy water main, connections of existing service pipes to new mains (retap), connections of Contractor installed new service pipes to existing meters and all other work that involves cutting or otherwise disturbing the existing water system.

SFWD will also provide disinfection of the US Navy water main by chlorination as specified in these special provisions.

For all work to be done by SFWD, the Contractor shall perform all excavation and backfill, steel plating/removal and pavement restoration.

REFERENCE STANDARDS

The regulatory requirements which govern the work of this Section include the following governing Codes and Standards, besides the State water work standards:

A. American Society for Testing and Materials (ASTM):

1. ASTM Designation B88 Seamless Copper Water Tube
2. ASTM Designation D1557 Test Methods for Moisture-Density Relations of Soils and Soil-Aggregate Mixtures Using 10-lb (4.54-kg) Rammer and 18-in. (457-mm) Drop

B. American Water Works Association (AWWA):

1. AWWA C104 Cement Mortar Lining for Ductile-Iron Pipe and Fittings for Water
2. AWWA C105 Polyethylene Encasement for Ductile-Iron Pipe Systems
3. AWWA C110 Ductile-Iron and Gray-Iron Fittings, 3 In. through 48 In. (75 mm through 1200 mm), for Water and Other Liquids
4. AWWA C151 Ductile-Iron Pipe, Centrifugally Cast, for Water or Other Liquids
5. AWWA C153 Errata Nov 1996) Ductile-Iron Compact Fittings, 3 In. through 24 In. (76 mm through 610 mm) and 54 In. through 64 In. (1,400 mm through 1,600 mm) for Water Service
6. AWWA C111 Rubber-Gasket Joints for Ductile-Iron Pressure Pipe and Fittings
7. AWWA C504 Rubber-Seated Butterfly Valves
8. AWWA C509 Resilient-Seated Gate Valves for Water Supply Service
9. AWWA C600 Installation of Ductile-Iron Water Mains and Their Appurtenances

10. AWWA C800 Underground Service Line Valves and Fittings

C. American Society of Mechanical Engineers (ASME): ASME B16.26 Cast Copper Alloy Fittings for Flared Copper Tubes.

SUBMITTALS

General Submittals:

General.-.Submit listed submittals in accordance with the provisions of the Contract Documents.

Product Data.-.Submit respective manufacturer's product data including catalog cuts, descriptive drawings, and literature, with all exceptions to the Specifications noted for each equipment item to be furnished under this Section including, but not limited to, ductile iron pipe, copper tubing, fittings, gaskets, valves, polyethylene encasement material and appurtenances.

Shoring Plans.-Submit Shoring Plans and calculations for excavation depths greater than 1.5 meters. Shoring plans shall be signed and stamped by a licensed Civil or Structural Engineer if plans deviate from Caltrans Standards. Work in the field can start only after the submittals have been approved.

Construction Schedule:

Attention is directed to "Obstructions" of these special provisions, regarding duration and work to be performed by SFWD personnel, regarding to the water mains relocation.

The Contractor shall submit Construction Schedule that will include time for the SFWD personnel to complete their work as specified herein. The Contractor shall incorporate the SFWD required times in his/her schedule. The Contractor shall confer with the Engineer in the preparation of the schedule that needs to satisfy the water distribution operation and minimize disruption of the services. No construction for water work shall be started until the Engineer approves the schedule.

The Contractor shall complete the excavation of the trench and install appropriate shoring to the satisfaction of the Engineer before SFWD personnel can do any work.

Quality Assurance Submittals:

Test Reports.-Certified test reports showing compliance with specified performance characteristics and physical properties.

Manufacturer's Instructions.-.Manufacturer's installation instructions.

Closeout Submittals:

Record Drawings.-Record actual location of distribution mains, valves, connections, and invert elevations for review.

DELIVERY, STORAGE & HANDLING

Ordering.-Comply with manufacturer's ordering instructions and lead time requirements to avoid construction delays.

Storage and Protection.-.Store materials protected from exposure to harmful weather conditions and at temperature and humidity conditions recommended by manufacturer.

SITE CONDITIONS

Excavations in which products will be buried shall be dry.
Coordinate the installation of the water supply system with the SFPUC/SFWD.

PART 2. – PRODUCTS

MATERIALS

Pipe.--Pipe sizes of 100 mm and larger in diameter, shall be ductile iron, Class 53 with Tyton bell and spigot ends conforming to ANSI/AWWA C151/A21.51, latest editions. Pipe sizes of less than 100 mm in diameter shall be copper tubing, conforming to ASTM Designation B 88, Type K, annealed. Pipe sizes of less than 100 mm in diameter shall be copper tubing, conforming to ASTM Designation B 88, Type K, annealed.

Fittings

Fittings for pipe 100 mm and larger.-Ductile Iron Push-On Tyton compact fittings shall conform to the applicable requirements of ANSI/AWWA C110/A21.10, or ANSI/AWWA C153/A21.53, latest revisions, unless otherwise specified herein. Fitting for pipe less than 100 mm in diameter shall be bronze/copper conforming to ASME B16.26. Fittings shall accommodate a "Field-Lok" type gasket.

Lining and Coating.-Ductile iron pipe, and fittings shall be lined with double cement-mortar lining with an asphaltic seal coating, 0.03 mm (1 mil), in accordance with AWWA C104. The exterior of ductile iron pipe, specials, and fittings shall be coated with a 0.03-mm (1-mil) asphaltic coating in accordance with AWWA C151, section 51-9.

Pipe Joints

Joint for ductile iron pipe 100 mm and larger, "Field-Lok" type of gaskets shall be used. Joints for less than 100 mm in diameter copper tubing shall be sweated, flared, flanged or screw-in as required per SFWD.

Valves

Valves 100 mm and larger in size shall be push-on (Tyton by Tyton ends) and can accommodate "Field-Lok" gaskets, resilient seated, non-rising stem, right turn open and nut operated.

Service Valves and fittings less than 100 mm in size shall be bronze/brass and shall comply with AWWA C800. Connections shall be screw-in, flared, or flanged as required.

Corporation Stops.-Corporation Stops shall be brass, in compliance with AWWA C800, copper tubing flare connection.

Polyethylene Encasement.-Polyethylene encasement for pipe and fittings shall conform to AWWA C105. 8 mil low density polyethylene tubes shall be used.

CONTRACT NO. 04-0120R4

CONTRACT CHANGE ORDER NO 73

SHEET 131 OF 280

MISCELLANEOUS METAL

All connecting devices, including Tie Rods, Rod Couplings, Pipe Clamps, Restraints and related hardware shall be as shown on plans.

Saddle shall feature brass body with stainless steel straps and hardware.

TRENCH BEDDING AND BACKFILL

Sand Bed.-All pipe shall be constructed on a prepared or natural sand bed the width of which shall be at least 300 mm plus the full width of the pipe, and not less than 100 mm thick below the pipe after installation.

Sand Backfill.-Backfill around all pipes from the bottom of the trench to a height 150 mm above the top of pipes for the full width of the trench shall be sand only. Sand backfill material shall be in accordance with the applicable requirements of the Standard Specifications.

Backfill Above Required Sand.-Backfill material above the required sand shall be in accordance with the applicable Standard Specifications.

PART 3. - EXECUTION

MAINTAINING WATER SERVICES

Maintain water service and conduct operations at times selected to minimize the duration and inconvenience of service interruption.

Keep existing water mains that will be replaced by new water mains in service until new water mains are ready for service.

Water valves in service shall be operated only by SFWD personnel.

CUTTING OF PIPE

Cutting of pipe shall be done in a neat and workmanlike manner without damage to the pipe. Unless otherwise recommended by the manufacturer and authorized by the Engineer, cutting shall be done with an approved type mechanical cutter. Wheel cutter shall be used when practicable.

PIPE INSTALLATION

A. No pipe shall be installed before the street or roadway sub-base is built.

B. Before any trench is excavated, the Contractor shall make openings in the roadway or sidewalk as directed by the Engineer to verify a suitable alignment of the main.
The trench shall be excavated so that a 100 mm thick layer of sand bedding can be installed beneath the pipe bottom such that the barrel of the pipe will have an even bearing along its entire length and with sufficient clearance provided for any necessary operations in connection with the laying of the pipe. Bell holes shall be excavated for each pipe bell or joint.

C. Before any pipe may be installed, the grade of the trench bottom shall be to the satisfaction of the Engineer. Immediately prior to installing the pipe, the Contractor shall remove all loose rocks and other objectionable material from the bottom of the trench and bell holes. When the trench is properly prepared, the pipe shall be lowered therein, singly, without jar or strain, and assembled by piece inside the trench.

D. Joints for ductile iron pipe shall be fastened by use of "Field-Lok" gaskets, in accordance with AWWA C600, unless otherwise directed by the Engineer.
E. The pipe shall be joined in strict adherence to the pipe manufacturer's printed installation instructions.
F. When the ductile iron pipe is cut in the field, the outside of the cut end shall be beveled about 6 mm at an angle of about 30 degrees and the leading edge rounded. The prepared cut end shall be marked at 84 mm for a 300 mm main and 83 mm for a 100 mm water line.
G. If the joint assembly is not accomplished with the application of reasonable force, the plain end of the pipe shall be removed to check the proper position of the gasket. At the end of each day, the Contractor shall plug the end of the laid pipe.
H. All connections to existing water mains will be made by SFWD. Contractor shall coordinate with SFWD to facilitate connection of the new and existing system.
I. Contractor shall provide locating/marking tape in the trench continuously over the centerline of the pipe per applicable requirements of these Specifications
J The entire piping system (main and service) shall be encased with polyethylene tubes or sheets in accordance with AWWA C105. Tapes shall be used to seal the wrapping at joints and tees.
K. The Contractor shall paint all tie rods, lugs, restraining rings assembly and all miscellaneous metal attached to the pipeline installed by the Contractor and SFWD with two coats of Koppers Bitumastic No. 505 or two coats of Proteco Wrap CA160 or approved equal, applied in accordance with the manufacturer's directions.
L. Insulating flanges and/or couplings shall be installed to electrically isolate the newly installed portion of pipeline from existing metallic pipelines.
M. Water lines shall not be laid in the same trench with sewer lines, gas lines, fuel lines, or electric wiring. Water lines shall be 3.3 m horizontally and 0.3 m vertically from sewer lines. Water lines shall in all cases cross above sewage force mains or inverted siphons and shall be not less than 0.3 m above the sewer main. Submit proposals for the Engineer's approval if these requirements can not be met due to field conditions.
N. The maximum allowable joint deflection shall be as given by the pipe manufacturer. If the alignment requires deflection in excess of the above limitations, a sufficient number of shorter lengths of pipe shall be installed to provide angular deflections within the limit set forth.
O. Restrained Joints.-Plugs, caps, tees and bends deflecting 11.25 degrees or more, either vertically or horizontally, on waterlines larger than 300 mm in diameter shall be provided with restrained joints. Valves shall be securely anchored or shall be provided with restrained joints to prevent movement. All joints on lateral and dead end of 100 mm in diameter or larger pipes shall be restrained.
P. The Contractor shall complete the excavation of the pit and install appropriate shoring to the satisfaction of the Engineer before SFWD personnel can do any work.

IDENTIFICATION OF PUSH-ON GASKET JOINTS

The Contractor shall identify all joints with Push-On gaskets by spraying white marking paint on top of each bell and also by taping a direct burial tape around the spigot end of each pipe just in front of the bell.

REMOVAL OF SFWD -OWNED BOX AND COVER

The Contractor shall remove all existing valve boxes and valve covers, if any, that are to be abandoned in this contract or as directed by the Engineer. The Contractor shall saw cut, excavate, remove and dispose of pavement; excavate the hole to the dimensions indicated (or required); remove the box at least 45 cm below grade (removal of the plate below the box is optional) and dispose of as his/her property; place and maintain all traffic routing and public safety requirements; furnish and place sand backfill; restore pavement, sidewalk, and other roadway structures that have been removed during the progress of the work, unless otherwise specified herein, and clean the site of the work together with all other work necessary or incidental thereto.

The Contractor shall return all box covers to the SFWD Corporation Yard at 1990 Newcomb Avenue, San Francisco, or at the location indicated by the Engineer.

The Contractor shall notify the City and County of San Francisco, SFWD in writing 5 working days prior to scheduling the removal of abandoned valve boxes and valve covers for SFWD Inspector approval. The Contractor shall identify the abandoned valve boxes and covers that are to be removed by marking them in the field for the SFWD Inspector for approval. Removal work shall be completed before surrounding finish grade work.

Restoring Pavement

Vehicular travel over backfilled but unpaved and unabridged trenches and other excavations will not be permitted. The Contractor shall construct, before use of pavement by vehicular traffic, and thereafter satisfactorily maintain, a smooth, regular asphalt pavement, not less than 150 mm thick, Type A asphalt concrete, and a 345 mm thick aggregate base, Class 3, over backfilled areas for the safe passage of vehicular traffic. All excess materials shall, at the same time, be removed and the street cleaned. The asphalt surfacing shall be in accordance with the applicable requirements of the Standard Specifications.

Cleanup

Upon completion of the installation of water lines, and appurtenances, all debris and surplus materials resulting from the work shall be removed.

MEASUREMENT AND PAYMENT

200 mm water main, will be measured along the centerline of the line, including fittings and valves, and paid for per meter for various sizes in the same manner specified for welded steel pipe in Section 70-1.04, "Measurement," and Section 70-1.05, "Payment," of the Standard Specifications.

The contract price paid per meter for 200 mm water main involved shall include full compensation for furnishing all labor, materials, tools, equipment and incidentals, and for doing all the work involved in installing the different sizes and types of pipe, fittings and valves, complete in place, including excavation backfill, installing valve boxes, polyethylene encasement, shoring for all excavation by the Contractor or SFWD for connecting and disconnecting of water main, disinfection of maintenance water line and testing in as shown on the plans, and as specified in these special provisions, and as directed by the Engineer. Any related work shall be considered as incidental and no separate payment shall be made therefore.

CONTRACT NO. 04-0120R4

CONTRACT CHANGE ORDER NO 73

SHEET 134 OF 280

10-1.37 THERMOPLASTIC DELINEATION (ESA)

A 200-mm thermoplastic delineation (ESA) along boundaries of the paved areas of the ESA 1a and 1b shall be furnished, installed, maintained in conformance with the details shown on the plans, as specified in these special provisions and as directed by the Engineer.

Thermoplastic delineation (ESA) shall be applied in conformance with the provisions in Section 84, "Traffic Stripes and Pavement Markings," of the Standard Specifications and these special provisions.

Thermoplastic material shall be free of lead and chromium, and shall conform to the requirements in State Specification PTH-02ALKYD.

Retroreflectivity of the thermoplastic delineation (ESA) shall conform to the requirements in ASTM Designation: D 6359-99. White thermoplastic traffic stripes and pavement markings shall have a minimum initial retroreflectivity of 250 $mcd \cdot m^{-2} \cdot lx^{-1}$.

Thermoplastic delineation (ESA) shall be applied at the minimum thickness and application rate as specified below. The minimum application rate is based on a solid stripe of 100 mm in width.

Minimum StripeThickness (mm)	Minimum Application Rate (kg/m)
2.0	0.4

MEEASUREMENT AND PAYMENT

Thermoplastic delineation (ESA) will be measured and paid for as thermoplastic traffic stripe.

Full compensation for maintaining the 200-mm ESA thermoplastic delineation (ESA) around the paved areas shall be considered as included in the contract shall be considered as included in the contract price paid for various items of work involved and no separate payment will be made therefor.

SECTION 10-3. ELECTRICAL SYSTEMS

10-3.01 DESCRIPTION

The following work shall conform to the provisions in Section 86, "Signals, Lighting and Electrical Systems," of the Standard Specifications and these special provisions:

A. Underground raceways electrical system (see E-1 to E-16 and UD-1 to UD-6) shall include, but not be limited to the following:

1. Install manholes and duct banks as shown on the plans.
2. Install all conduit including anchors, inserts, fittings, and supports as shown on the plans.
3. Install and terminate bare copper grounding conductors and copper ground bars as shown on the plans.

10-3.02 ABBREVIATIONS

The following abbreviations are added to those listed in Section 1-1.02, "Abbreviations," of the Standard Specifications:

BNC	Bayonet Nut Connector
CPU	Central Processing Unit
CSA	Canadian Standards Association
C-UL	Canadian Underwriters Laboratories
DLCI	Data Link Control Identifier
DMA	Direct Memory Access
EEMAC	Electrical Equipment Manufactures Advisory Council
EEPROM	Electrically Erasable Programmable Read-Only Memory
EMI/RFI	Electromagnetic Interference/Radio Frequency Interference
EPR	Ethylene propelyne rubber
ESO	Electrical Safety Orders of the Division of Industrial Relations, State of California
FCC	Federal Communications Commission
GFCI	Ground Fault Current Interrupter
THD	Total Harmonic Distortion
IDC	Insulation Displacement Connector
ICEA	Insulated Cable Engineering Association
IEC	International Electrotechnical Commission
I/O	Input / Output
ISDN	Integrated Services Digital Network
ISO	International Organization for Standardization
IS/OS	Individual Shield/Overall Shield
JEDEC	Joint Electron Device Engineering Council
NEC	National Electrical Code
NETA	International Electrical Testing Association Inc.
NO	Normally Open
NC	Normally Closed
NFPA	National Fire Protection Association
NTSC	National Television Systems Committee
OSHA	Occupational Safety and Health Administration
OSI	Open Systems Interconnect
PVC	Polyvinyl Chloride
REA	Rural Electrification Administration
RTD	Resistance Temperature Detector
SAS	Self-Anchored Suspension
SCADA	Supervisory Control And Data Acquisition
SCSI	Small Computer Systems Interface
SDLC	Serial Data Link Control
TELCO	Telephone company
TIA	Telecommunications Industry Association
VME	Versa Module Eurocard
XLPE	Cross Linked Polyethelene
YBI	Yerba Buena Island

10-3.03 COST BREAK-DOWN

Cost break-downs shall conform to the provisions in Section 86-1.03, "Cost Break-Down," of the Standard Specifications and these special provisions.

The Engineer shall be furnished a cost break-down for each contract lump sum item of work described in this Section 10-3.

The cost break-down shall be submitted to the Engineer for approval within 30 days after the contract has been approved. The cost break-down shall be approved, in writing, by the Engineer before any partial payment for the items of electrical work will be made.

The cost break-down shall be divided into the following categories. Within each category, each item of work shall be broken down, as a minimum, to include the following listed items in addition to those listed in the Standard Specifications:

A. Underground raceways electrical installation is shown on the plans and shall include, but not be limited to the following additional items of the cost break-down:

1. Conduits, conduit anchors, fittings and supports – list each size and type.
2. Equipment grounding system – list each size and type.
3. Manholes – list each size and type.
4. Duct bank – list each size and type.

10-3.04 NUMBERING ELECTRICAL EQUIPMENT

The placement of numbers on electrical equipment will be done by others, unless otherwise stated in these special provisions.

10-3.05 RIGID GALVANIZED STEEL CONDUIT, THREADED COUPLINGS AND ELBOWS

The rigid galvanized steel (RGS) conduit, threaded couplings, and elbows shall conform to Section 86-2.05, "Conduit," of the Standard Specifications for Type 1 where shown on the plans.

Pull ropes for use when installing cables in conduit shall consist of flat, woven, lubricated, soft-fiber polyester tape with a minimum tensile strength of 8000 N and shall have printed sequential measurement markings at least every meter.

10-3.06 UNDERGROUND RACEWAYS

DUCTBANKS

Underground conduits shall be Type 1 encased in concrete. Concrete for conduit encasement shall be 907 kg test with aggregate of 20 mm or smaller.

The concrete shall be colored red by the addition of 6 kg of red oxide powder to each cubic meter of mix. The coloring shall be thoroughly mixed into the concrete before pouring. Adequate spacers, tie-downs and bracing shall be provided to maintain conduits in place during the pouring of the concrete. Ducts shall be installed so as to drain to manholes.

All conduits entering and leaving the manholes shall be bonded together with copper bonding cable looped through the manhole. All conduit connections shall be threaded. All connections shall be made with suitable conductive thread compound. After installation all conduits shall be checked for continuity and cleaned properly. Cleaning of conduit shall be done by the use of compressed air for sizes 41 mm and smaller, and by the use of mandrel and cleaning brushes pulled through each conduit for sizes larger than 41 mm. Prior to backfilling of the underground duct system, the Contractor shall provide a yellow (with black lettering) warning tape, 340 mm from the finished grade, stating "CAUTION-BURIED ELECTRICAL LINE".

MANHOLES

All manholes shall be installed by the Contractor as shown and specified on the plans.

MANHOLE FRAMES AND COVERS

Frame and cover shall be cast iron and shall be designated for H-20 Traffic loading, and shall comply with ASTM F1143.

Manhole cover shall be engraved with the following nameplates:

a. Caltrans High Voltage, for Manholes No. 17, 20, and 23
b. Caltrans 600 V, for Manholes No.16, 19, and 22
c. Caltrans TOS&COM, for Manholes No.18, 21, and 24

10-3.07 BONDING AND GROUNDING

Bonding and grounding shall conform to the provisions in Section 86-2.10, "Bonding and Grounding," of the Standard Specifications and these special provisions.

Bonding jumpers in standards with handholes and traffic pull box lid covers shall be attached by a UL listed lug using 4.5-mm diameter or larger brass or bronze bolts and shall run to the conduit or bonding wire in the adjacent pull box. The grounding jumper shall be visible after the standard has been installed and the mortar pad and cap have been placed on the foundation.

Standards without handholes shall have bonding accomplished by jumpers attached to UL listed ground clamps on each anchor bolt.

For slip base standards or slip base inserts, bonding shall be accomplished by jumpers attached to UL listed ground clamps on each anchor bolt, or a UL listed lug attached to the bottom slip base plate with a 4.5-mm diameter or larger brass or bronze bolt.

Equipment bonding and grounding conductors are required in conduits, except when the conduits contain combinations of loop lead-in cable, fiber optic cable, or signal interconnect cable. A No. 8 minimum, bare copper wire shall run continuously in circuits, except for series lighting circuits, where No. 6 bare copper wire shall run continuously. The bonding wire size shall be increased to match the circuit breaker size in conformance with the Code, or shall be as shown on the plans. Conduits to be installed for future conductors, may omit the copper wire.

Bonding of metallic conduits in metal pull boxes shall be by means of bonding bushings and bonding jumpers connected to the bonding wire running in the conduit system.

500 kCMIL bare copper grounding conductor and 4/0 grounding conductors shall be installed in the duct bank as shown on the plans. Route the 500 kCMIL grounding conductor through duct banks and manholes. Two 250 kCMIL bare grounding conductors are to be exothermically welded to the 500 kCMIL main grounding conductor and ran to the foundation footing of all bent and pier columns as shown on the plans. At each split in the duct bank a 4/0 bare copper grounding conductor shall be exothermically welded to the 500 kCMIL bare copper grounding conductor and ran with the separate 600 volt or TOS/COM duct bank and continued through any manholes and back to the 15 kV duct bank. All bridge electrical components shall be grounded to this system as shown on the plans.

10-3.08 PAYMENT

The contract lump sum prices paid for underground raceways electrical system shall include full compensation for furnishing all labor, materials, tools, equipment, and incidentals, and for doing all the work involved in the listed items below, complete in place, including manuals,

CONTRACT NO. 04-0120R4

CONTRACT CHANGE ORDER NO 73

SHEET 136 OF 280

preparation and delivery of any and all proposals, plans, submittals, or other documents to the Engineer, warranty work or modifications, software or software changes, testing and training, as shown on the plans, as specified in the Standard Specifications and these special provisions, and as directed by the Engineer.

Full compensation for furnishing and installing frames and covers for duct bank manholes shall be considered as included in the contract lump sum price paid for underground raceways electrical system and no separate payment will be made therefor.

Standard Plans List

The Standard Plan sheets applicable to this contract include, but are not limited to those indicated below. Applicable Revised Standard Plans (RSP) and New Standard Plans (NSP) indicated below are included in the project plans as individual Standard Plan sheets.

GENERAL ROAD WORK (Miscellaneous)

A10A	**Acronyms and Abbreviations (A-L)**
A10B	**Acronyms and Abbreviations (M-Z)**
A10C	**Symbols (Sheet 1 of 2)**
A10D	**Symbols (Sheet 2 of 2)**
A20A	**Pavement Markers and Traffic Lines, Typical Details**
A20B	**Pavement Markers and Traffic Lines, Typical Details**
A62B	**Limits of Payment for Excavation and Backfill – Bridge Surcharge and Wall**
A62C	**Limits of Payment for Excavation and Backfill - Bridge**

GENERAL ROAD WORK (Drainage)

D73	**Drainage Inlets**
D74C	**Drainage Inlets Details**

GENERAL ROAD WORK (Temporary Facilities)

T2	**Temporary Crash Cushion, Sand Filled (Shoulder Installations)**
T3	**Temporary Railing (Type K)**

BRIDGE

B0-1	**Bridge Details**
B7-6	**Deck Drains – Types D-1 and D-2**
B7-11	**Utility Details**
ES-1A	**Electrical Systems (Symbols And Abbreviations)**
ES-1B	**Electrical Systems (Symbols And Abbreviations)**
ES-1C	**Electrical Systems (Symbols And Abbreviations)**

CONTRACT NO. 04-0120R4

CONTRACT CHANGE ORDER NO 73

SHEET 139 OF 280

AMENDMENTS TO JULY 1999 STANDARD SPECIFICATIONS

UPDATED AUGUST 17, 2007

Issue Date: August 17, 2007

Section 49-1.08, "Bearing Value and Penetration," of the Standard Specifications is amended to read:

49-1.08 PILE DRIVING ACCEPTANCE CRITERIA

- Except for piles to be load tested, driven piles shall be driven to a value of not less than the nominal resistance shown on the plans unless otherwise specified in the special provisions or permitted in writing by the Engineer. In addition, when a pile tip elevation is specified, driven piles shall penetrate at least to the specified tip elevation, unless otherwise permitted in writing by the Engineer. Piles to be load tested shall be driven to the specified tip elevation.
- When the pile nominal resistance is omitted from the plans or the special provisions, timber piles shall be driven to a nominal resistance of 800 kN, and steel and concrete piles shall be driven to a nominal resistance of 1250 kN.
- The nominal resistance for driven piles shall be determined from the following formula in which "R_u" is the nominal resistance in kilonewtons, "E_r" is the manufacturer's rating for joules of energy developed by the hammer at the observed field drop height, and "N" is the number of hammer blows in the last 300 millimeters. (maximum value to be used for N is 100):

$$R_u = (7 * (E_r)^{1/2} * \log_{10}(0.83 * N)) - 550$$

The first paragraph in Section 49-2.03, "Requirements," of the Standard Specifications is amended to read:

- When preservative treatment of timber piles is required by the plans or specified in the special provisions, the treatment shall conform to the provisions in Section 58, "Preservative Treatment of Lumber, Timber and Piling," and the applicable AWPA Use Category.

The first paragraph in Section 49-2.04, "Treatment of Pile Heads," of the Standard Specifications is amended to read:

A. An application of wood preservative conforming to the provisions in Section 58-1.04, "Wood Preservative for Manual Treatment," shall first be applied to the head of the pile and a protective cap shall then be built up by applying alternate layers of loosely woven fabric and hot asphalt or tar similar to membrane waterproofing, using 3 layers of asphalt or tar and 2 layers of fabric. The fabric shall measure at least 150 mm more in each direction than the diameter of the pile and shall be turned down over the pile and the edges secured by binding with 2 turns of No. 10 galvanized wire. The fabric shall be wired in advance of the application of the final layer of asphalt or tar, which shall extend down over the wiring.

B. The sawed surface shall be covered with 3 applications of a hot mixture of 60 percent creosote and 40 percent roofing pitch, or thoroughly brushcoated with 3 applications of hot creosote and covered with hot roofing pitch. A covering of 3.50-mm nominal thickness galvanized steel sheet shall be placed over the coating and bent down over the sides of each pile to shed water.

Section 49-3.01, "Description," of the Standard Specifications is amended by deleting the fifth paragraph.

The sixth and seventh paragraphs in Section 49-3.01, "Description," of the Standard Specifications are amended to read:

• Except for precast prestressed concrete piles in a corrosive environment, lifting anchors used in precast prestressed concrete piles shall be removed, and the holes filled in conformance with the provisions in Section 51-1.18A, "Ordinary Surface Finish."

• Lifting anchors used in precast prestressed concrete piles in a corrosive environment shall be removed to a depth of at least 25 mm below the surface of the concrete, and the resulting hole shall be filled with epoxy adhesive before the piles are delivered to the job site. The epoxy adhesive shall conform to the provisions in Sections 95-1, "General," and 95-2.01, "Binder (Adhesive), Epoxy Resin Base (State Specification 8040-03)."

The first and second paragraphs in Section 49-4.01, "Description," of the Standard Specifications are amended to read:

• Cast-in-place concrete piles shall consist of one of the following:

A. Steel shells driven permanently to the required nominal resistance and penetration and filled with concrete.
B. Steel casings installed permanently to the required penetration and filled with concrete.
C. Drilled holes filled with concrete.
D. Rock sockets filled with concrete.

• The drilling of holes shall conform to the provisions in these specifications. Concrete filling for cast-in-place concrete piles is designated by compressive strength and shall have a minimum 28-day compressive strength of 25 MPa. At the option of the Contractor, the combined aggregate grading for the concrete shall be either the 25-mm maximum grading, the 12.5-mm maximum grading, or the 9.5-mm maximum grading. Concrete shall conform to the provisions in Section 90, "Portland Cement Concrete," and Section 51, "Concrete Structures." Reinforcement shall conform to the provisions in Section 52, "Reinforcement."

The fourth paragraph in Section 49-4.03, "Drilled Holes," of the Standard Specifications is amended to read:

• After placing reinforcement and prior to placing concrete in the drilled hole, if caving occurs or deteriorated foundation material accumulates on the bottom of the hole, the bottom of the drilled hole shall be cleaned. The Contractor shall verify that the bottom of the drilled hole is clean.

The first and second paragraphs in Section 49-4.04, "Steel Shells," of the Standard Specifications are amended to read:

- Steel shells shall be sufficiently watertight to exclude water during the placing of concrete. The shells may be cylindrical or tapered, step-tapered, or a combination of either, with cylindrical sections.

The first paragraph in Section 49-4.05, "Inspection," of the Standard Specifications is amended to read:

- After being driven and prior to placing reinforcement and concrete therein, the steel shells shall be examined for collapse or reduced diameter at any point. Any shell which is improperly driven or broken or shows partial collapse to such an extent as to materially decrease its nominal resistance will be rejected. Rejected shells shall be removed and replaced, or a new shell shall be driven adjacent to the rejected shell. Rejected shells which cannot be removed shall be filled with concrete by the Contractor at the Contractor's expense. When a new shell is driven to replace a rejected shell, the Contractor, at the Contractor's expense, shall enlarge the footing as determined necessary by the Engineer.

The third paragraph in Section 49-5.01, "Description," of the Standard Specifications is amended to read:

- Steel pipe piles shall conform to the following requirements:

  1. Steel pipe piles less than 360 mm in diameter shall conform to the requirements in ASTM Designation: A 252, Grade 2 or 3.
  2. Steel pipe piles 360 mm and greater in diameter shall conform to the requirements in ASTM Designation: A 252, Grade 3.
  3. Steel pipe piles shall be of the nominal diameter and nominal wall thickness shown on the plans or specified in the special provisions.
  4. The carbon equivalency (CE) of steel for steel pipe piles, as defined in AWS D 1.1, Section XI5.1, shall not exceed 0.45.
  5. The sulfur content of steel for steel pipe piles shall not exceed 0.05-percent.
  6. Seams in steel pipe piles shall be complete penetration welds.

The first paragraph in Section 49-6.01, "Measurement," of the Standard Specifications is amended to read:

- The length of timber, steel, and precast prestressed concrete piles, and of cast-in-place concrete piles consisting of driven shells filled with concrete, shall be the greater of the following:

  A. The total length in place in the completed work, measured along the longest side, from the tip of the pile to the plane of pile cut-off.
  B. The length measured along the longest side, from the tip elevation shown on the plans or the tip elevation ordered by the Engineer, to the plane of pile cut-off.

The third paragraph in Section 49-6.02, "Payment," of the Standard Specifications is amended to read:

• The contract price paid per meter for cast-in-drilled-hole concrete piling shall include full compensation for furnishing all labor, materials, tools, equipment, and incidentals, and for doing all work involved in drilling holes, disposing of material resulting from drilling holes, temporarily casing holes and removing water when necessary, furnishing and placing concrete and reinforcement, and constructing reinforced concrete extensions, complete in place, to the required penetration, as shown on the plans, as specified in these specifications and in the special provisions, and as directed by the Engineer.

The seventh paragraph in Section 49-6.02, "Payment," of the Standard Specifications is amended to read:

• The contract unit price paid for drive pile shall include full compensation for furnishing all labor, materials, tools, equipment, and incidentals, and for doing all the work involved in driving timber, concrete and steel piles, driving steel shells for cast-in-place concrete piles, placing filling materials for cast-in-place concrete piles and cutting off piles, all complete in place to the required nominal resistance and penetration as shown on the plans and as specified in these specifications and the special provisions, and as directed by the Engineer.

The ninth paragraph in Section 49-6.02, "Payment," of the Standard Specifications is amended to read:

• Full compensation for all jetting, drilling, providing special driving tips or heavier sections for steel piles or shells, or other work necessary to obtain the specified penetration and nominal resistance of the piles, for predrilling holes through embankment and filling the space remaining around the pile with sand or pea gravel, for disposing of material resulting from jetting, drilling or predrilling holes, and for all excavation and backfill involved in constructing concrete extensions as shown on the plans, and as specified in these specifications and the special provisions, and as directed by the Engineer shall be considered as included in the contract unit price paid for drive pile or in the contract price paid per meter for cast-in-drilled-hole concrete piling, and no additional compensation will be allowed therefor.

Section 49-6.02, "Payment," of the Standard Specifications is amended by adding the following paragraphs:

• Full compensation for furnishing and placing additional testing reinforcement, for load test anchorages, and for cutting off test piles, shall be considered as included in the contract price paid for piling of the type or class shown in the Engineer's Estimate, and no additional compensation will be allowed.

• No additional compensation or extension of time will be made for additional foundation investigation, installation and testing of indicator piling, cutting off piling and restoring the foundation investigation and indicator pile sites, and review of request by the Engineer.

Add the following to Special Provisions Section "Piling", subsection Cast-In-Drilled-Hole Concrete Piles", subsection "Construction":

For piles at Bent W4R that are to be constructed in dry or dewatered hole, the following clean-out procedure shall be used:

1. Perform mechanical clean-out using the large and small buckets as has been performed following existing specifications.
2. If more than 3" of water is in the bottom of the hole, pump out remaining water and sediment to within 3" of bottom of hole using an adequate sediment suction pump with sufficient power and that is submerged at the deepest portion of the hole.
3. Introduce at least 400 gal of fresh water directly to the bottom of the hole, agitate with clean-out bucket in orderto suspend solids, then pump out water and sediment as in Step 2.
4. The Engineer will determine when the hole is adequately clean to meet the design requirement.
5. Install vertical inspection pipes in the same manner as required for piles in wet hole.

CONTRACT NO. 04-012084

CONTRACT CHANGE ORDER NO 73

SHEET 444 OF 780

FOR COMPLETE RIGHT OF WAY AND ACCURATE ACCESS DATA, SEE RIGHT OF WAY RECORD MAPS AT DISTRICT OFFICE.

CURVE DATA

No.	R	Δ	T	L	N-COORDINATE	E-COORDINATE
1	900.00	18°54'19"	149.84	296.96	646767.979	1836729.976
2	1475	13°51'19"	179.22	356.68	647149.180	1835980.740
3	30.00	34°6'56"	9.21	17.86	647338.795	1836093.626
4	19.98	47°1'26"	8.69	16.40	647387.924	1836097.709

Caltrans Metric

DIST	COUNTY	ROUTE	KILOMETER POST TOTAL PROJECT	SHEET No.	TOTAL SHEETS
04	SF	80	12.6/13.2	1	137

11-27-06

REGISTERED CIVIL ENGINEER

PLANS APPROVAL DATE

The State of California or its officers or agents shall not be responsible for the accuracy or completeness of electronic copies of this plan sheet.

REGISTERED PROFESSIONAL ENGINEER T.T. Lai No. 63630 Exp. 9-30-08 CIVIL STATE OF CALIFORNIA

To get to the Caltrans web site, go to: http://www.dot.ca.gov

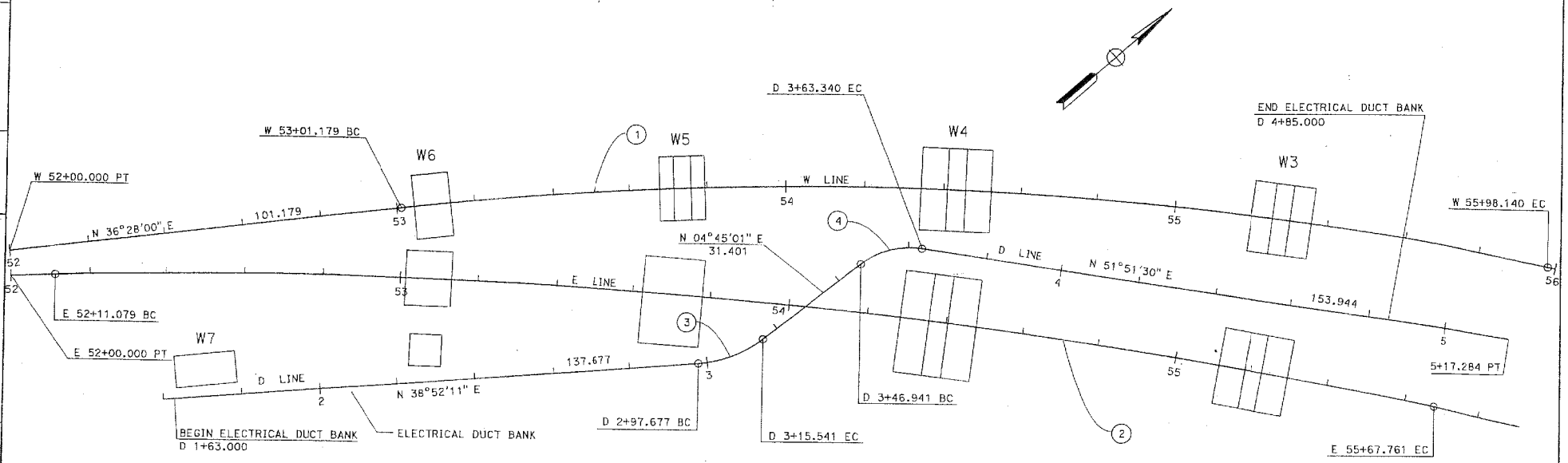

NOTES:

1. COORDINATES, DISTANCES AND BEARINGS ARE BASED ON CCS 1983 ZONE 3.
2. ELEVATIONS ARE BASED ON 1929 NATIONAL GEODETIC VERTICAL DATUM (NGVD).
3. FOR USCG ROADWAY WIDENING AND PAVEMENT REPLACEMENT, SEE SHEET C-3.

CONTRACT No. 04-0120R4

CONTRACT CHANGE ORDER NO.

SHEET ___ OF ___

LAYOUT

SCALE 1:500

ALL DIMENSIONS ARE IN METERS UNLESS OTHERWISE SHOWN

I - 1

STATE OF CALIFORNIA - DEPARTMENT OF TRANSPORTATION

Caltrans PROJECT DEVELOPMENT

PROJECT ENGR. T. T. LAI

CALCULATED/DESIGNED BY | CHECKED BY | DATE | REVISED BY | DATE REVISED

ST REVISION 1-14-06 | DATE PLOTTED => 04-DEC-2006 | TIME PLOTTED => 13:45

DIST	COUNTY	ROUTE	KILOMETER POST TOTAL PROJECT	SHEET No	TOTAL SHEETS
04	SF	80	12.6/13.2	2	137

Caltrans Metric

11-27-06
REGISTERED CIVIL ENGINEER

PLANS APPROVAL DATE

The State of California or its officers or agents shall not be responsible for the accuracy or completeness of electronic copies of this plan sheet.

REGISTERED PROFESSIONAL ENGINEER T.T. Lai No. 63630 Exp. 9-30-08 CIVIL STATE OF CALIFORNIA

To get to the Caltrans web site, go to: http://www.dot.ca.gov/

ABBREVIATIONS:

ESA ENVIRONMENTALLY SENSITIVE AREA
SCA SPECIAL CONSTRUCTION AREA
ATM AREA TO BE MONITORED DURING CONSTRUCTION

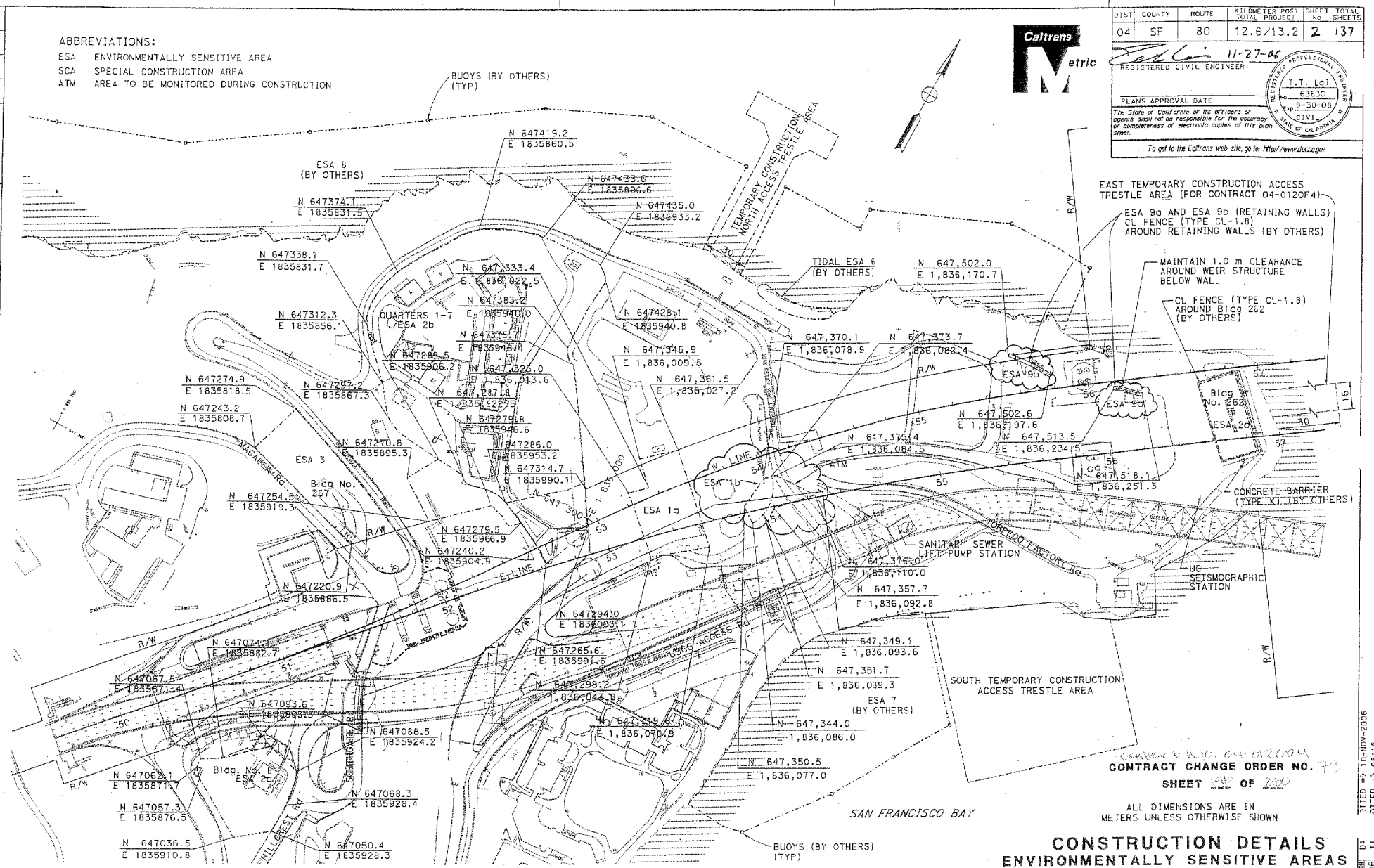

Contract No. 04-0120F4
CONTRACT CHANGE ORDER NO. 73
SHEET 19 OF 250

ALL DIMENSIONS ARE IN METERS UNLESS OTHERWISE SHOWN

CONSTRUCTION DETAILS
ENVIRONMENTALLY SENSITIVE AREAS

SCALE 1:1000

C-1

STATE OF CALIFORNIA - DEPARTMENT OF TRANSPORTATION
Caltrans PROJECT DEVELOPMENT

PROJECT ENGINEER T. T. LAI
CALCULATED/DESIGNED BY
CHECKED BY
DATE 10/03 REVISED BY
11/03 DATE REVISED

AST REVISION 1-10-06 DATE PLOTTED => 10-NOV-2006 TIME PLOTTED => 08:16

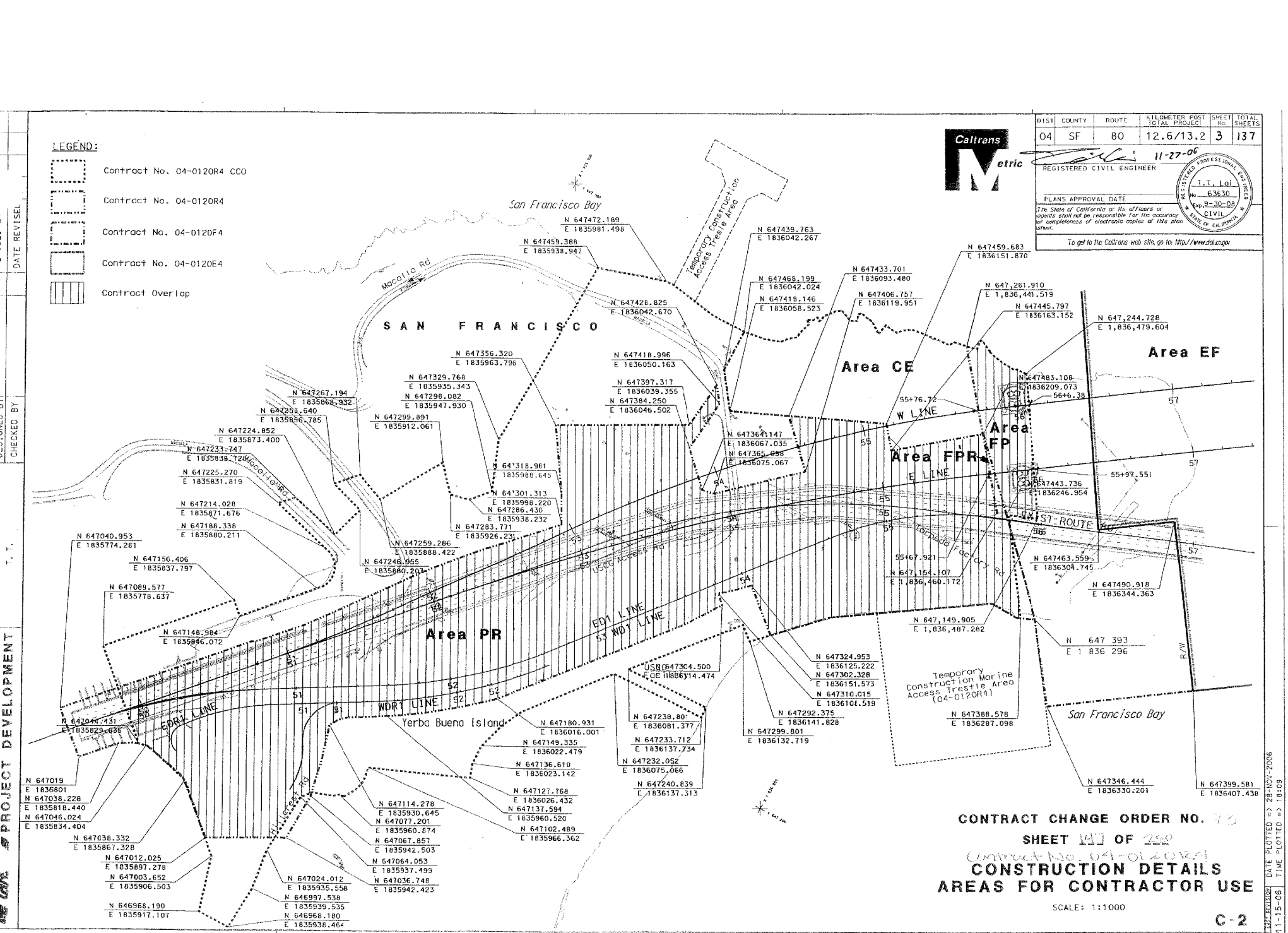

DIST	COUNTY	ROUTE	KILOMETER POST TOTAL PROJECT	SHEET No.	TOTAL SHEETS
04	SF	80	12.6/13.2	3	137

Caltrans Metric

11-27-06
REGISTERED CIVIL ENGINEER

T.T. Loi
63630
Exp. 9-30-08
CIVIL
STATE OF CALIFORNIA

PLANS APPROVAL DATE

The State of California or its officers or agents shall not be responsible for the accuracy or completeness of electronic copies of this plan sheet.

To get to the Caltrans web site, go to: http://www.dot.ca.gov

CONTRACT CHANGE ORDER NO. 73

SHEET 47 **OF** 250

Contract No. 04-0120R4

CONSTRUCTION DETAILS
AREAS FOR CONTRACTOR USE

SCALE: 1:1000

C-2

DATE REVISED
DATE PLOTTED => 28-NOV-2006
TIME PLOTTED => 18:09

PROJECT DEVELOPMENT
DESIGNED BY
CHECKED BY
DATE REVISED

DIST	COUNTY	ROUTE	KILOMETER POST TOTAL PROJECT	SHEET No	TOTAL SHEETS
04	SF	80	12.6/13.2	4	137

Caltrans Metric

11-27-06
REGISTERED CIVIL ENGINEER

PLANS APPROVAL DATE

REGISTERED PROFESSIONAL ENGINEER
T.T. Lai
No. 63630
Exp. 9-30-08
CIVIL
STATE OF CALIFORNIA

The State of California or its officers or agents shall not be responsible for the accuracy or completeness of electronic copies of this plan sheet.

To get to the Caltrans web site, go to: http://www.dot.ca.gov

CURVE DATA

NO.	R	△	T	L	N	E
3	25.0	109°25'08"	35.321	47.743	647.336.250	1 836 117.333
4	50.0	34°47'16"	15.663	30.358	647 415.940	1 836 117.418

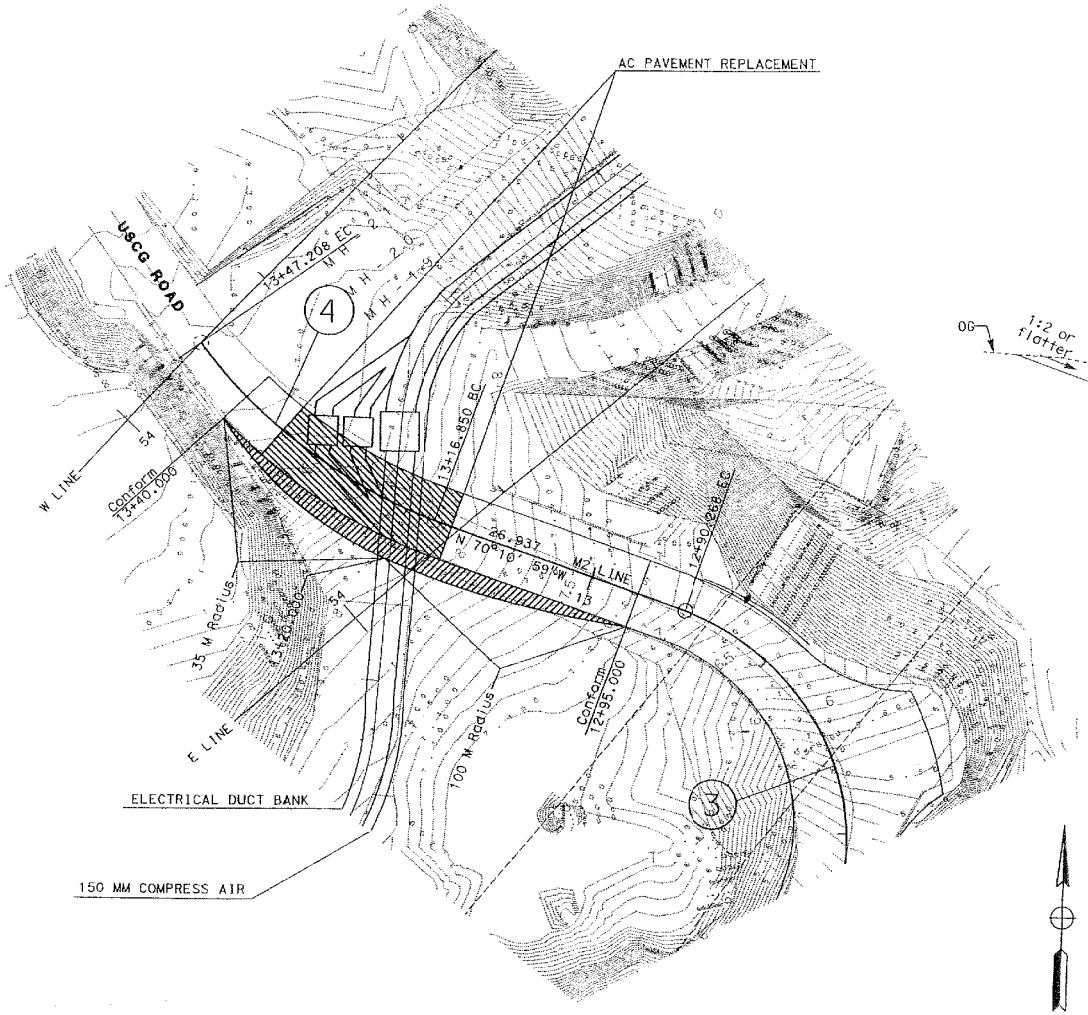

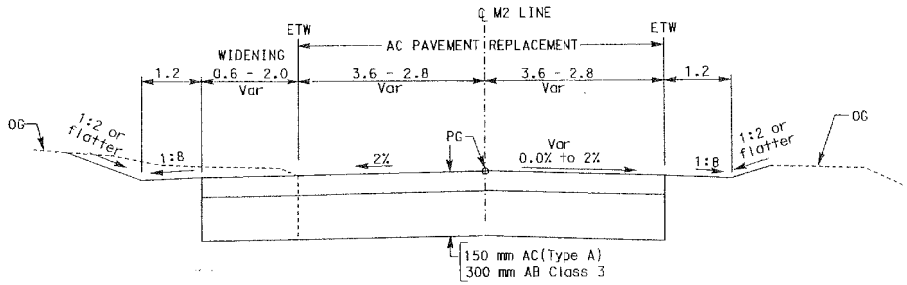

M2 LINE
STA 12+95.000 TO 13+40.000

NOTES:

1. THIS PLAN ACCURATE FOR PAVEMENT ELEVATION AND CONTOUR GRADING WORK ONLY.
2. ELEVATIONS ARE BASED ON THE EXISTING CONDITION.
3. DIMENSIONS OF THE STRUCTURAL SECTION ARE SUBJECT TO TOLERANCES SPECIFIED IN STD SPECIFICATIONS

Contract No. 04-0120R4
CONTRACT CHANGE ORDER NO. 73
SHEET 146 **OF** 150

CONSTRUCTION DETAILS
CONSTRUCTION DETAIL (USCG ROAD)

SCALE 1:500

ALL DIMENSIONS ARE IN METERS UNLESS OTHERWISE SHOWN

C-3

DATE REVISED | CHECKED BY | DESIGNED BY | T. T. LAI | Caltrans PROJECT DEVELOPMENT

LAST REVISION 11-16-06 | DATE PLOTTED => 28-NOV-2006 | TIME PLOTTED => 18:02

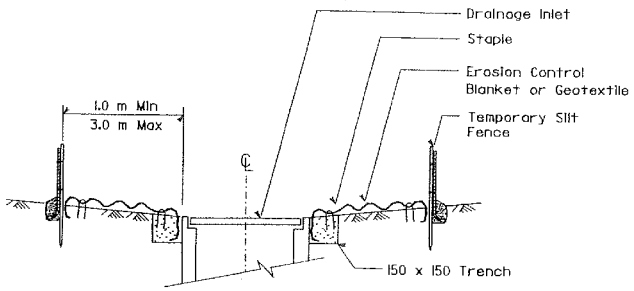

SECTION A-A

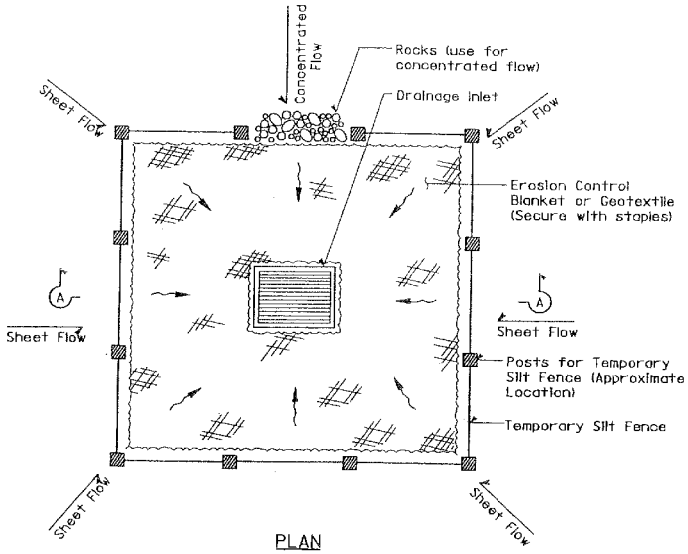

PLAN

TEMPORARY DRAINAGE INLET PROTECTION (TYPE I) (TEMPORARY SILT FENCE)

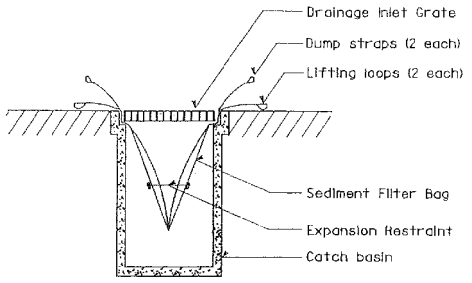

SECTION B-B

SEDIMENT FILTER BAG DETAIL

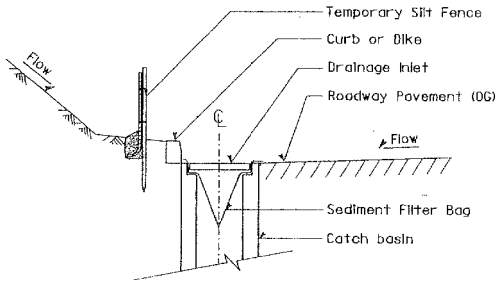

SECTION A-A

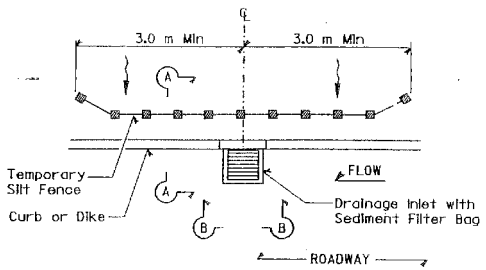

PLAN

TEMPORARY DRAINAGE INLET PROTECTION (TYPE 5) (SEDIMENT FILTER BAG)

All dimensions are in millimeters unless otherwise shown

Caltrans Metric

DIST	COUNTY	ROUTE	KILOMETER POST TOTAL PROJECT	SHEET NO.	TOTAL SHEETS
04	SF	80	12.6/13.2	5	137

LICENSED LANDSCAPE ARCHITECT 11-27-06

PLANS APPROVAL DATE

The State of California or its officers or agents shall not be responsible for the accuracy or completeness of electronic copies of this plan sheet.

Caltrans now has a web site! To get to the web site, go to: http://www.dot.ca.gov

LICENSED LANDSCAPE ARCHITECT — CHRISTOPHER M. PEDICH — 11-30-06 — STATE OF CALIFORNIA

NOTES

1. Install Temporary Silt Fence by first digging trench, driving posts, placing and securing fabric. Then backfill and tamp.
2. Dimensions may vary to fit field conditions.

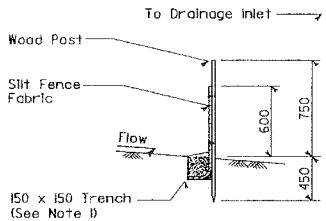

SECTION

TEMPORARY SILT FENCE DETAIL

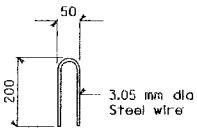

STAPLE DETAIL

CONTRACT NO. 04-012084

CONTRACT CHANGE ORDER NO. 79

SHEET 199 **OF** 282

WATER POLLUTION CONTROL

NO SCALE **WPC-1**

CU 04343 EA 012084

CHRIS P. CHECKED BY CP 11/1/06 DATE REVISED

WATER QUALITY

LAST REVISION 11-01-06 DATE PLOTTED => 28-NOV-2006 TIME PLOTTED => 18:00

FOR REDUCED PLANS ORIGINAL SCALE IS IN MILLIMETERS 0 20 40 60 80 USERNAME => tlai DGN FILE => Unapproved WPC-1.dgn

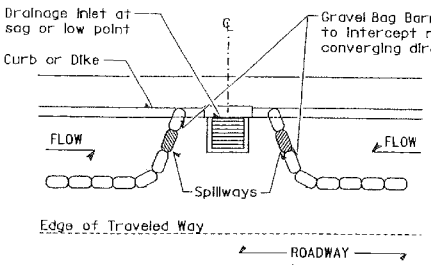

PLAN

CONFIGURATION FOR SAG POINT INLET (GRAVEL BAG BARRIER)

GRAVEL BAG BARRIER (TYPE 3A) SPACING TABLE

SLOPE OF ROADWAY (PERCENT)	1 to 4	4 to 6	6 to 8	8 to 10	10 +
INTERVAL BETWEEN BARRIERS (M)	30.0	22.5	15.0	7.5	4.0

For slope of less than 1%, install barriers only if erosion/sediment is prevalent

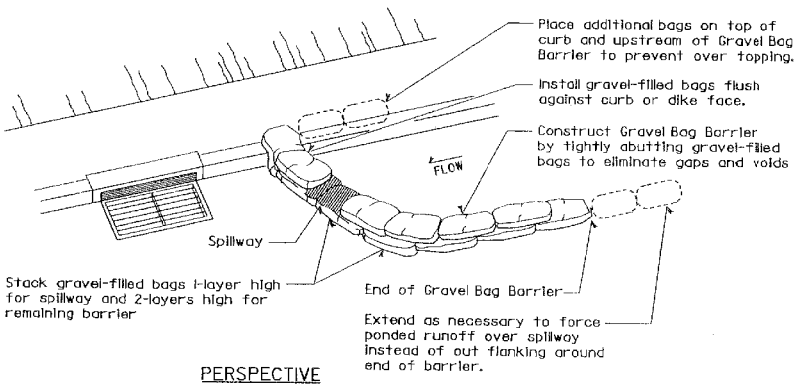

PERSPECTIVE

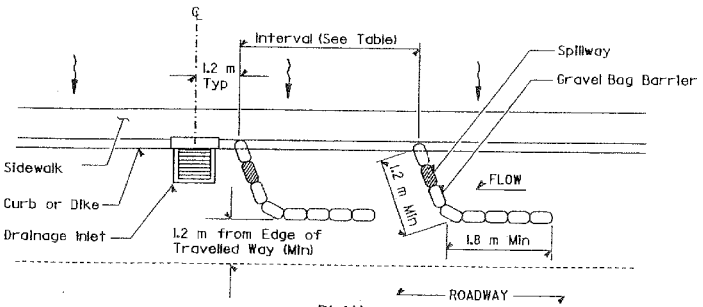

PLAN

TEMPORARY DRAINAGE INLET PROTECTION (TYPE 3A) (GRAVEL BAG BARRIER)

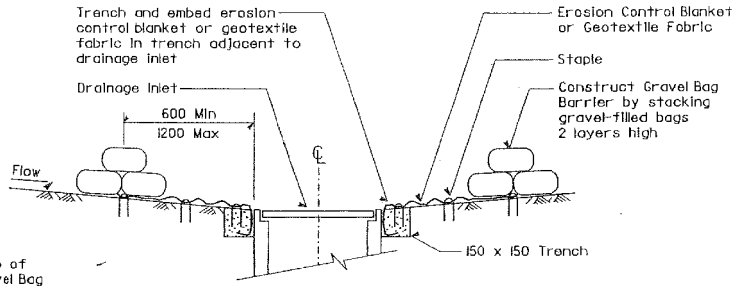

SECTION A-A

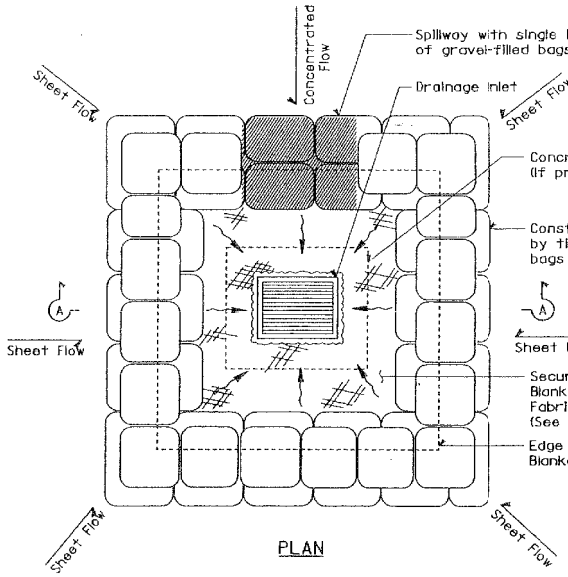

PLAN

TEMPORARY DRAINAGE INLET PROTECTION (TYPE 3B) (GRAVEL BAG BARRIER)

NOTES

1. Place safety cones adjacent to drainage inlet protection.
2. Dimensions may vary to fit field conditions.
3. Install a minimum of 3 gravel bag barriers upstream of each drainage inlet to be protected.
4. Position erosion control blanket or geotextile fabric at edge of concrete apron and secure in trench.
5. Erosion control blanket/geotextile fabric is not required if the area adjacent to the drainage inlet is vegetated or paved.

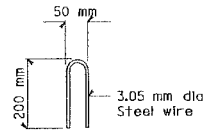

STAPLE DETAIL

DIST	COUNTY	ROUTE	KILOMETER POST TOTAL PROJECT	SHEET NO	TOTAL SHEETS
04	SF	80	12.6/13.2	6	137

LICENSED LANDSCAPE ARCHITECT 11-27-06

PLANS APPROVAL DATE 11-30-06

The State of California or its officers or agents shall not be responsible for the accuracy or completeness of electronic copies of this plan sheet.

Caltrans now has a web site! To get to the web site, go to: http://www.dot.ca.gov

CONTRACT CHANGE ORDER NO. 15

SHEET 150 OF 350

WATER POLLUTION CONTROL

NO SCALE **WPC-2**

All dimensions are in millimeters unless otherwise shown

DESIGNED BY CHRIS PADICK
CHECKED BY CP 11/06 DATE REVISED 11/06
WATER QUALITY

LAST REVISION 11-01-06 DATE PLOTTED => 28-NOV-2006 TIME PLOTTED => 17:55

DIST	COUNTY	ROUTE	KILOMETER POST TOTAL PROJECT	SHEET NO	TOTAL SHEETS
04	SF	80	12.6/13.2	7	137

LICENSED LANDSCAPE ARCHITECT 11-30-06

PLANS APPROVAL DATE 11-30-06

The State of California or its officers or agents shall not be responsible for the accuracy or completeness of electronic copies of this plan sheet.

Caltrans now has a web site! To get to the web site, go to: http://www.dot.ca.gov

FOAM BARRIER SPACING TABLE

SLOPE OF ROADWAY (PERCENT)	0 to 1	1 to 2	2 to 3	3 to 4	5 +
INTERVAL BETWEEN BARRIERS (M)	15.24	10.67	9.14	7.62	6.10
ANGLE FROM FACE OF CURB (DEGREES)	70°	70°	70°	45°	45°
SUGGESTED BARRIER LENGTH (M)	1.82	1.82	1.82	1.82	1.82

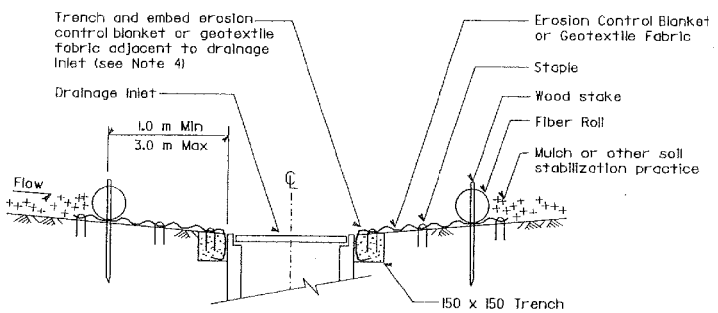

SECTION A-A

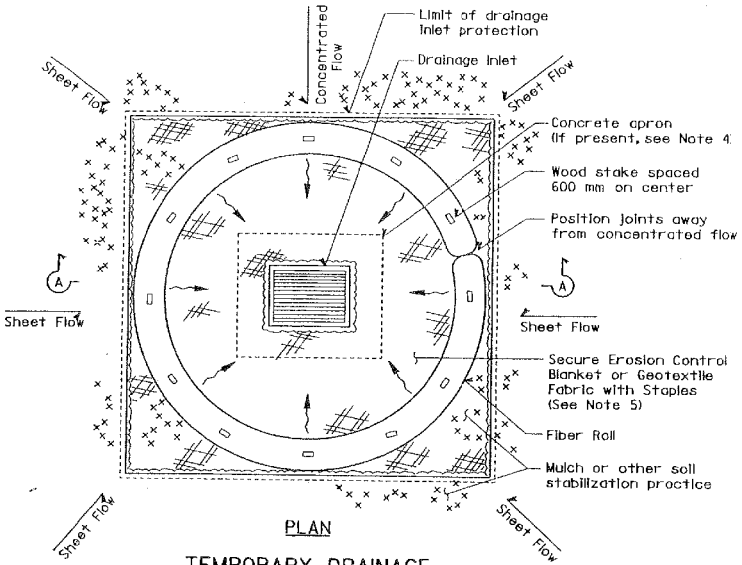

PLAN

TEMPORARY DRAINAGE INLET PROTECTION (TYPE 4A) (FIBER ROLLS)

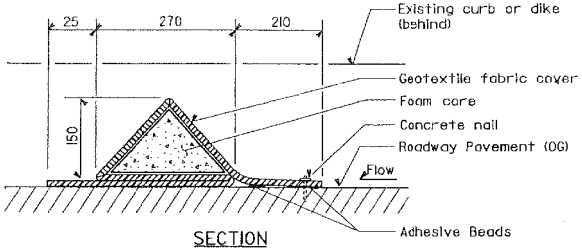

SECTION

FOAM BARRIER DETAIL

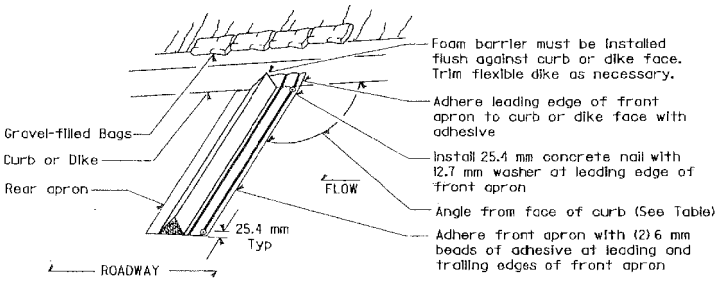

PERSPECTIVE

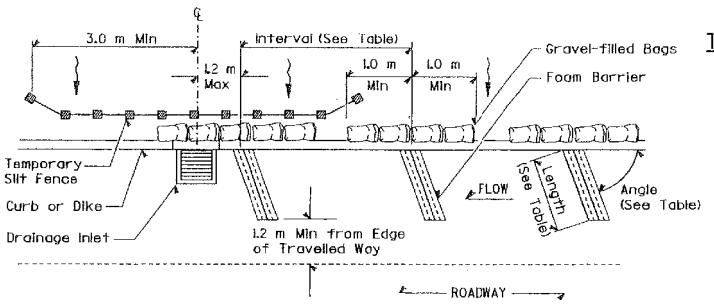

PLAN

TEMPORARY DRAINAGE INLET PROTECTION (TYPE 4B) (FOAM BARRIER)

NOTES

1. Install Temporary Silt Fence by first digging trench, driving posts, placing and securing fabric. Then backfill and tamp.
2. Dimensions may vary to fit field conditions.
3. Install a minimum of 3 foam barriers upstream of each drainage inlet to be protected.
4. Position erosion control blanket or geotextile fabric at edge of concrete apron and secure in trench.
5. Erosion control blanket/geotextile fabric is not required if the area adjacent to the drainage inlet is vegetated.

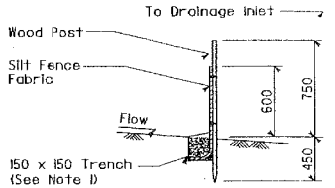

SECTION

TEMPORARY SILT FENCE DETAIL

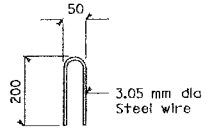

STAPLE DETAIL

All dimensions are in millimeters unless otherwise shown

CONTRACT NO. 04-0120R4

CONTRACT CHANGE ORDER NO. 13

SHEET 151 **OF** 156

WATER POLLUTION CONTROL

NO SCALE **WCP-3**

DESIGNED BY CHRIS F
CHECKED BY CP 11/06 DATE REVISED
WATER QUALITY

LAST REVISION 11-01-06 DATE PLOTTED => 28-NOV-2006 TIME PLOTTED => 18:03

FOR REDUCED PLANS ORIGINAL 0 20 40 60 80 USERNAME => tloi

CONTRACT NO. 04-012024

CONTRACT CHANGE ORDER NO. 73

SHEET 132 OF 250

DIST	COUNTY	ROUTE	KILOMETER POST TOTAL PROJECT	SHEET NO.	TOTAL SHEETS
				8	137

Robert B. Schatt
LICENSED LANDSCAPE ARCHITECT

July 1, 2004
PLANS APPROVAL DATE

The State of California or its officers or agents shall not be responsible for the accuracy or completeness of electronic copies of this plan sheet.

To get to the Caltrans web site, go to: http://www.dot.ca.gov/

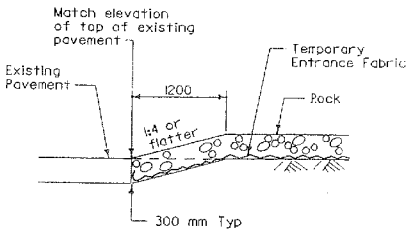

SECTION
CONFORM DETAIL

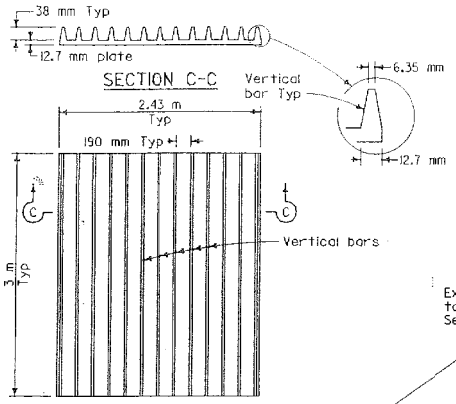

PLAN
TYPICAL CORRUGATED
STEEL PANEL DETAIL

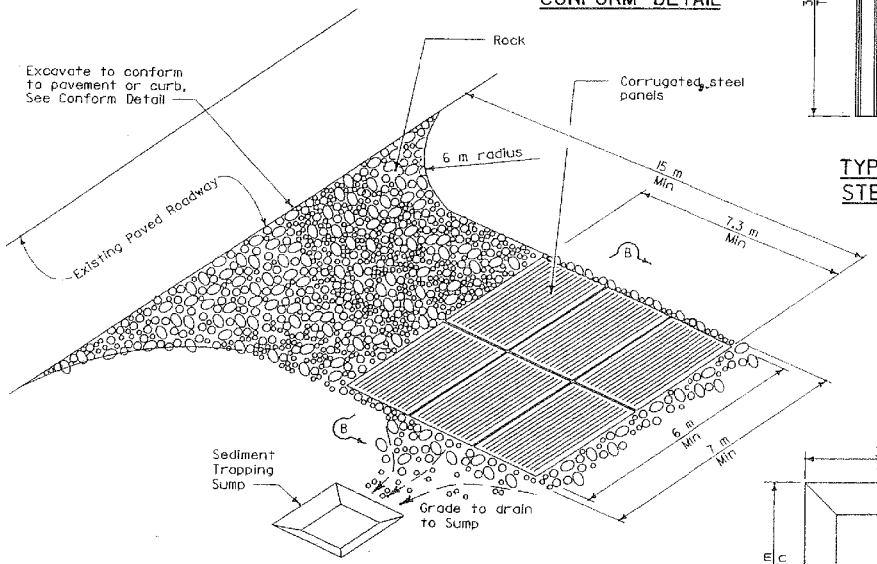

PERSPECTIVE
TEMPORARY CONSTRUCTION ENTRANCE (TYPE 2)

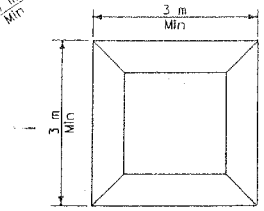

PLAN

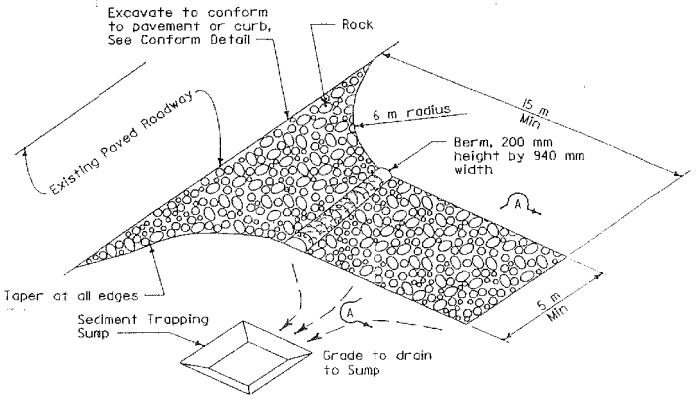

PERSPECTIVE
TEMPORARY CONSTRUCTION ENTRANCE (TYPE 1)

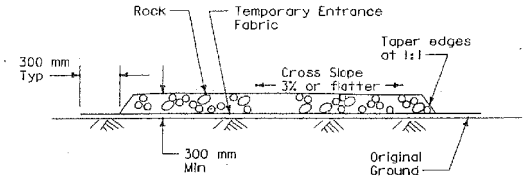

SECTION A-A

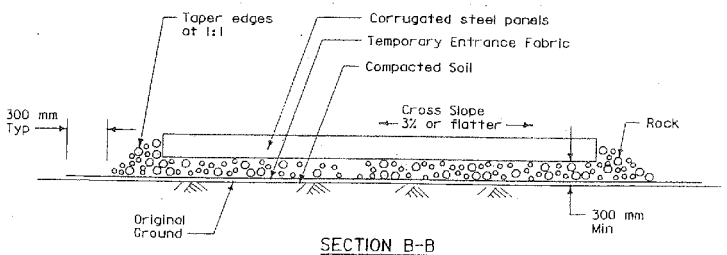

SECTION B-B

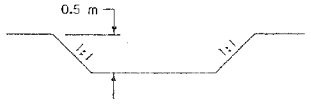

ELEVATION
SEDIMENT TRAPPING SUMP

CONTRACT CHANGE ORDER NO. 64
SHEET ___ OF ___

STATE OF CALIFORNIA
DEPARTMENT OF TRANSPORTATION

TEMPORARY WATER POLLUTION CONTROL DETAILS (TEMPORARY CONSTRUCTION ENTRANCE)

NO SCALE

ALL DIMENSIONS ARE IN MILLIMETERS UNLESS OTHERWISE SHOWN

T58

2004 Std PLAN T58

04-23-04

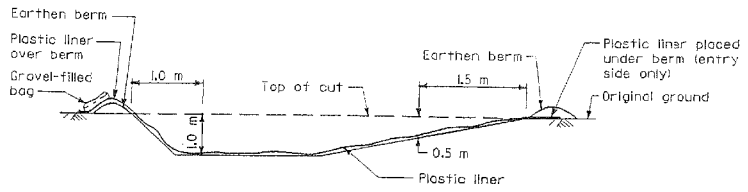

SECTION B-B

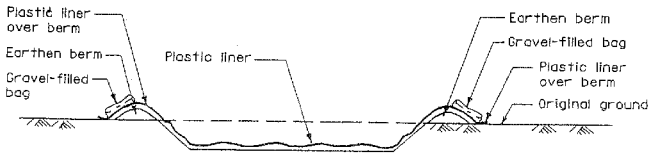

SECTION A-A

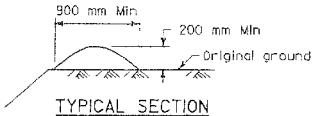

TYPICAL SECTION
EARTHEN BERM

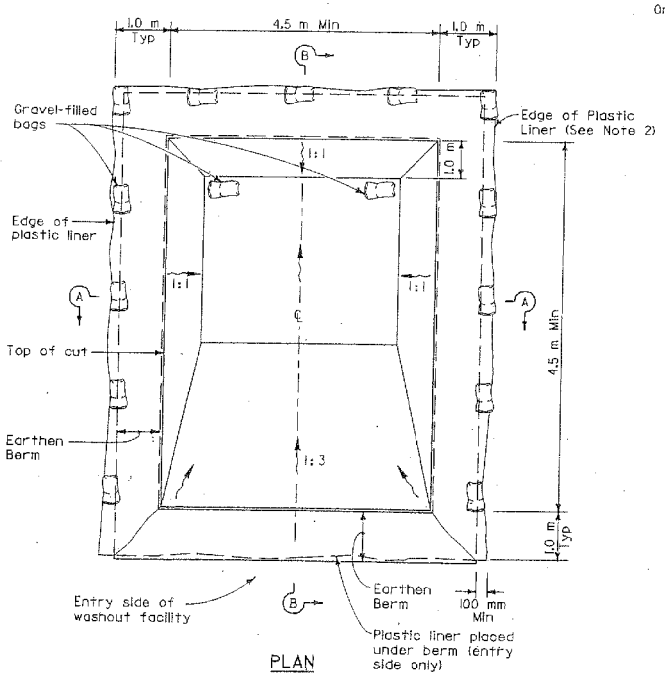

PLAN

TEMPORARY CONCRETE WASHOUT FACILITY
(Below Grade)

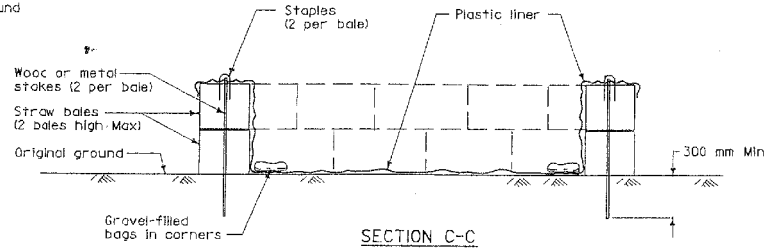

SECTION C-C

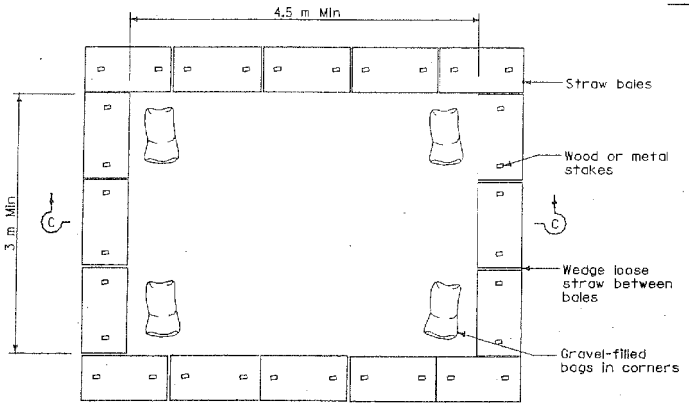

PLAN
TEMPORARY CONCRETE WASHOUT FACILITY
(On Grade)

NOTES

1. The concrete washout sign shall be installed within 10 meters of the temporary concrete washout facility.
2. Plastic liner shall be anchored with gravel-filled bags for below grade concrete washout facility.

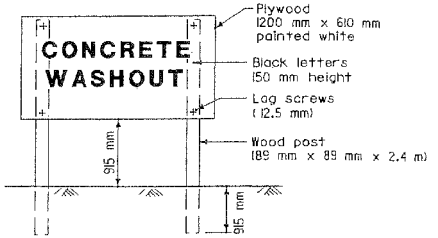

CONCRETE WASHOUT SIGN DETAIL

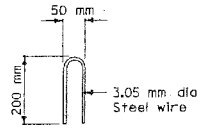

STAPLE DETAIL

STATE OF CALIFORNIA
DEPARTMENT OF TRANSPORTATION

TEMPORARY WATER POLLUTION CONTROL DETAILS (TEMPORARY CONCRETE WASHOUT FACILITY)

NO SCALE

ALL DIMENSIONS ARE IN MILLIMETERS UNLESS OTHERWISE SHOWN

CONTRACT CHANGE ORDER NO. 73

SHEET 122 OF 290

CONTRACT NO. 04-0120K4

Caltrans Metric

DIST	COUNTY	ROUTE	KILOMETER POST TOTAL PROJECT	SHEET NO.	TOTAL SHEETS
				9	137

Robert D. Schatt
LICENSED LANDSCAPE ARCHITECT

July 1, 2004
PLANS APPROVAL DATE

The State of California or its officers or agents shall not be responsible for the accuracy or completeness of electronic copies of this plan sheet.

To get to the Caltrans web site, go to: http://www.dot.ca.gov

2004 Std PLAN T59

T59

DIST	COUNTY	ROUTE	KILOMETER POST TOTAL PROJECT	SHEET No	TOTAL SHEETS
04	SF	80	12.6/13.2	10	137

11/27/06

LICENSED LANDSCAPE ARCHITECT

PLANS APPROVAL DATE

The State of California or its officers or agents shall not be responsible for the accuracy or completeness of electronic copies of this plan sheet.

Caltrans now has a web site! To get to the web site, go to: http://www.dot.ca.gov

Caltrans Metric

EROSION CONTROL LEGEND

EROSION CONTROL (NETTING)

FIBER ROLLS

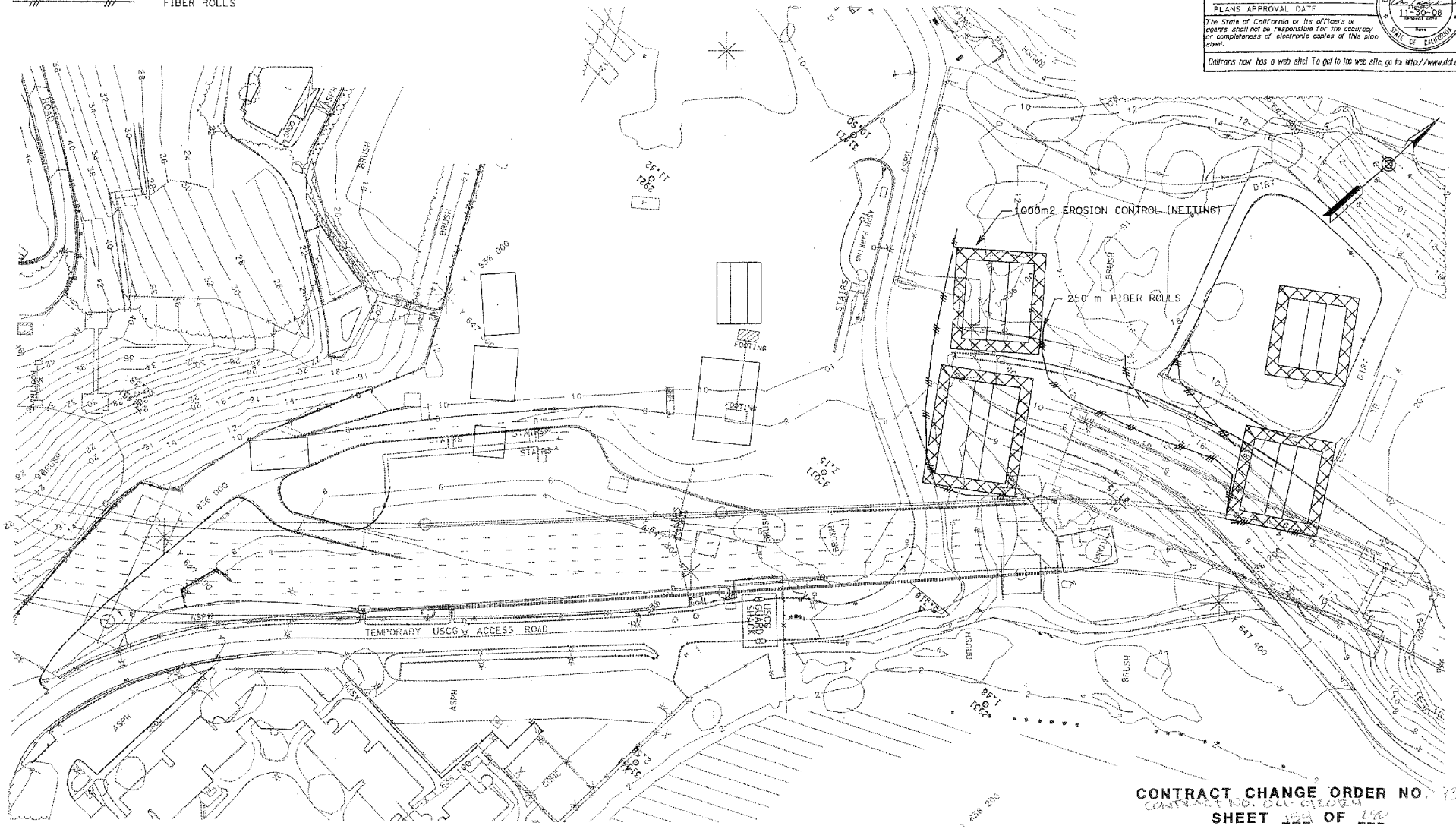

All dimensions are in millimeters unless otherwise shown

CONTRACT CHANGE ORDER NO. 73

CONTRACT NO. 04-012024

SHEET 154 OF 250

EROSION CONTROL PLAN

SCALE: 1:500

EC-1

STATE OF CALIFORNIA - DEPARTMENT OF TRANSPORTATION

Caltrans

WATER QUALITY

PROJECT LANDSCAPE ARCHITECT

CHRIS PADICK

CALCULATED/ DESIGNED BY	CP	DATE 11/06	REVISED BY
CHECKED BY	CP	11/06	DATE REVISED

LAST REVISION 11-01-06

DATE TIME ...ED => 04-DEC-2006 ...ED => 14:23

EROSION CONTROL QUANTITIES

SHEET NO.	EROSION CONTROL (TYPE D)					EROSION CONTROL (NETTING)	FIBER ROLLS
	PURE LIVE SEED (EROSION CONTROL)	FIBER (EROSION CONTROL)	COMPOST (EROSION CONTROL)	STABILIZING EMULSION (EROSION CONTROL)	STRAW (EROSION CONTROL)		
UNIT	KG	KG	M3	KG	TONNE	M2	M
EC-1	47	450	2.8	98	3.2	1000	250

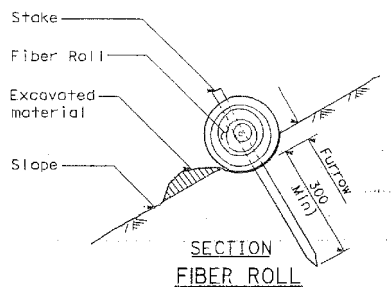

SECTION
FIBER ROLL
(TYPE I)

Caltrans Metric

DIST	COUNTY	ROUTE	KILOMETER POST TOTAL PROJECT	SHEET NO	TOTAL SHEETS
04	SF	80	12.6/13.2	11	137

11-27-06
LICENSED LANDSCAPE ARCHITECT

PLANS APPROVAL DATE

The State of California or its officers or agents shall not be responsible for the accuracy or completeness of electronic copies of this plan sheet.

Caltrans now has a web site! To get to the web site, go to: http://www.dot.ca.gov

NOTE

1. Fiber roll spacing varies depending upon slope inclination.
2. Installations shown in the perspectives are for slope inclination of 1:0 and steeper.

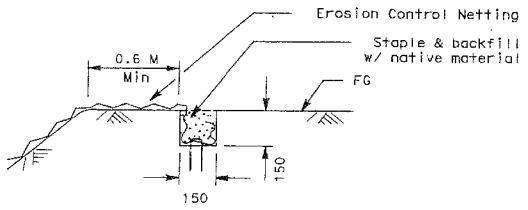

SECTION
KEY TRENCH AT SLOPE HINGE POINT

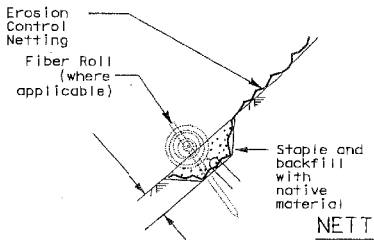

SECTION
KEY TRENCH AT CONFORM

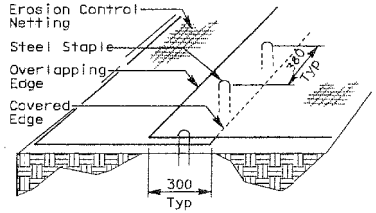

NETTING OVERLAP and STAPLE PATTERN

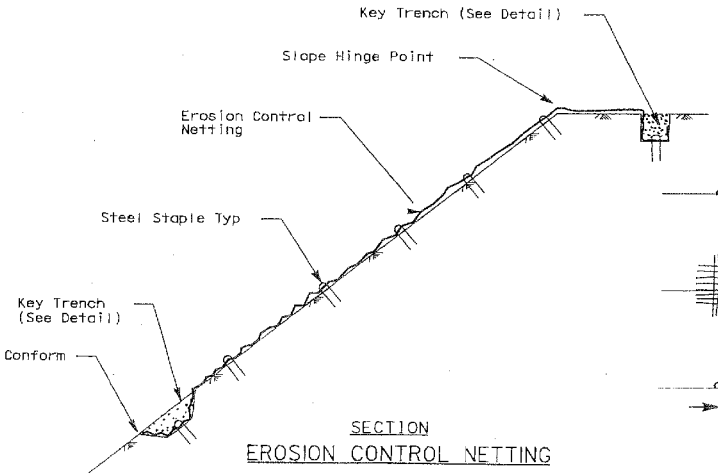

SECTION
EROSION CONTROL NETTING

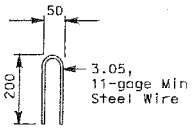

STAPLE DETAIL

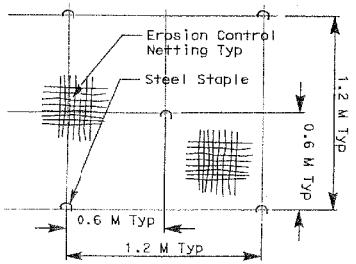

STAPLE PATTERN

All dimensions are in millimeters unless otherwise shown

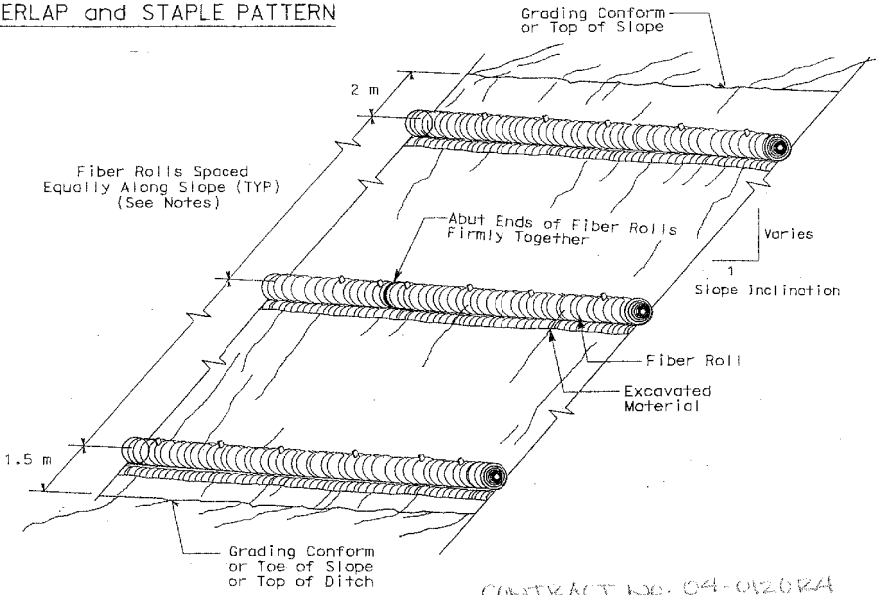

PERSPECTIVE

FIBER ROLL (TYPE I) ON SLOPE

CONTRACT NO. 04-0120K4
CONTRACT CHANGE ORDER NO. 73
SHEET 122 OF 122

EROSION CONTROL DETAIL/QUANTITIES

NO SCALE ECDQ-1

STATE OF CALIFORNIA - DEPARTMENT OF TRANSPORTATION
Caltrans
WATER QUALITY
PROJECT LANDSCAPE ARCHITECT
CHRIS PADICK
CALCULATED/ DESIGNED BY
CHECKED BY
CP 11/06 DATE
CP 11/06 REVISED BY
DATE REVISED

LAST REVISION 11-01-06 | DATE PLOTTED => 28-NOV-2006 | TIME PLOTTED => 13:07

DIST	COUNTY	ROUTE	KILOMETER POST TOTAL PROJECT	SHEET No	TOTAL SHEETS
04	SF	80	12.6/13.2	12	137

11-27-06

REGISTERED CIVIL ENGINEER

PLANS APPROVAL DATE

The State of California or its officers or agents shall not be responsible for the accuracy or completeness of electronic copies of this plan sheet.

To get to the Caltrans web site, go to: http://www.dot.ca.gov

Caltrans Metric

REGISTERED PROFESSIONAL ENGINEER Isaac Perez No. 53542 Exp. 05-30-07 CIVIL STATE OF CALIFORNIA

LEGEND

- DRAINAGE SYSTEM NUMBER
- DRAINAGE UNIT LETTER
- ESA
- TCE
- UTILITY TRENCH/DUCT BANK
- TIMBER BULKHEAD
- G2M
- REMOVE
- DRAINAGE INLET

P	POSITIVE JOINT TYPE
S	STANDARD JOINT TYPE
APC	ALTENATIVE PIPE CULVERT
WSP	WELDED STEEL PIPE
VCP	VITRIFIED CLAY PIPE

NOTES:

1. ALL TIES ARE TO THE CENTER OF DRAINAGE STRUCTURE OR PIPES, UNLESS OTHERWISE NOTED.
2. THE INLET FLOW LINES ARE 33 mm HIGHER THAN THE OUTLET FLOW, UNLESS OTHERWISE NOTED.

ALL DIMENSIONS ARE IN METERS UNLESS OTHERWISE SHOWN

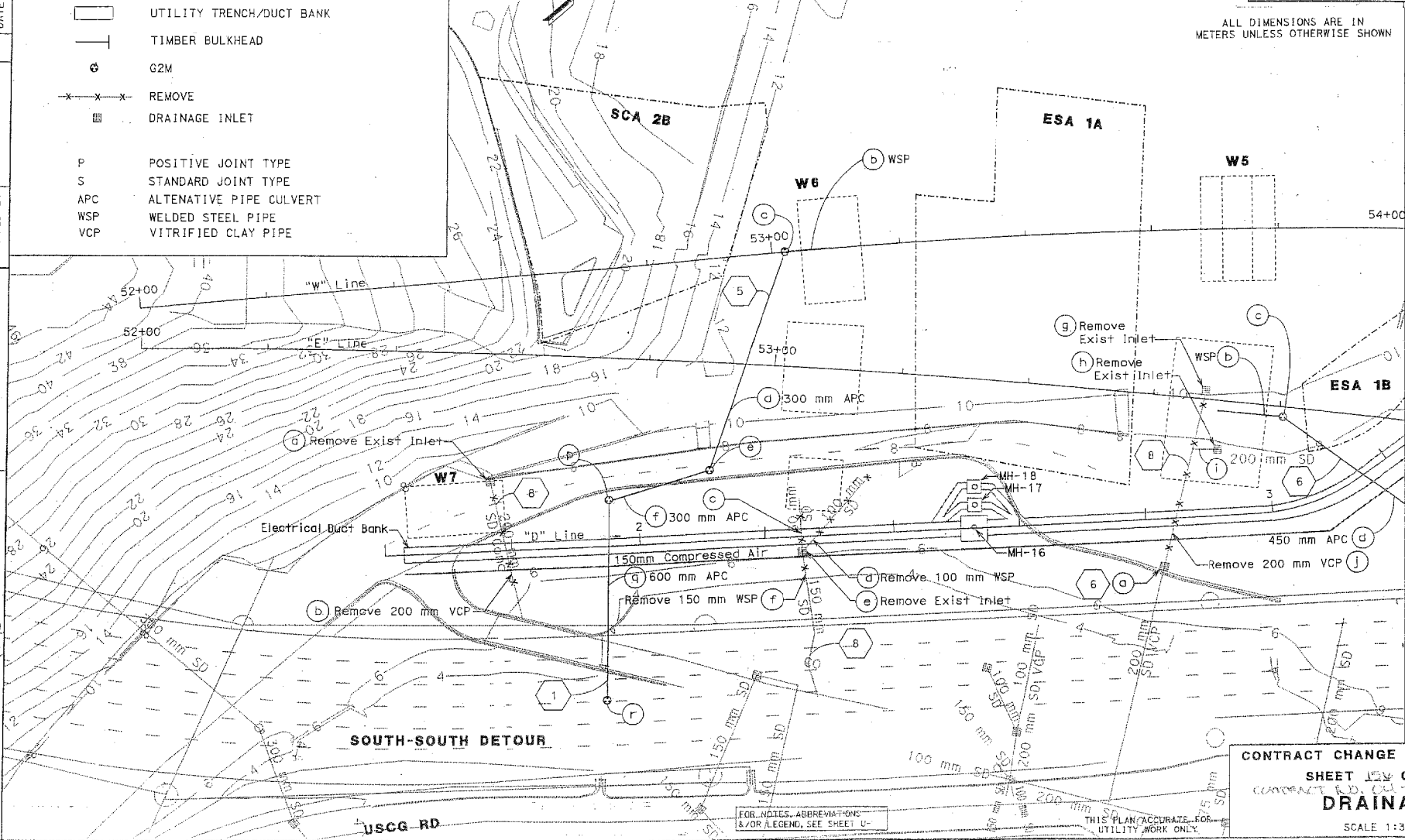

FOR NOTES, ABBREVIATIONS &/OR LEGEND, SEE SHEET U-

THIS PLAN ACCURATE FOR UTILITY WORK ONLY

CONTRACT CHANGE ORDER NO. 75

SHEET 154 OF 180

CONTRACT NO. 04-0120R4

DRAINAGE

SCALE 1:300

D-1

STATE OF CALIFORNIA - DEPARTMENT OF TRANSPORTATION

Caltrans PROJECT DEVELOPMENT

PROJECT ENGINEER T. T. LAI

CALCULATED/DESIGNED BY | CHECKED BY | DATE | REVISED BY | DATE REVISED

PLOTTED => 04-DEC-2006
PLOTTED => 14:51

LAST REVISION 11-14-06

RELATIVE BORDER SCALE 0 20 40 60 80 | USERNAME => tlai

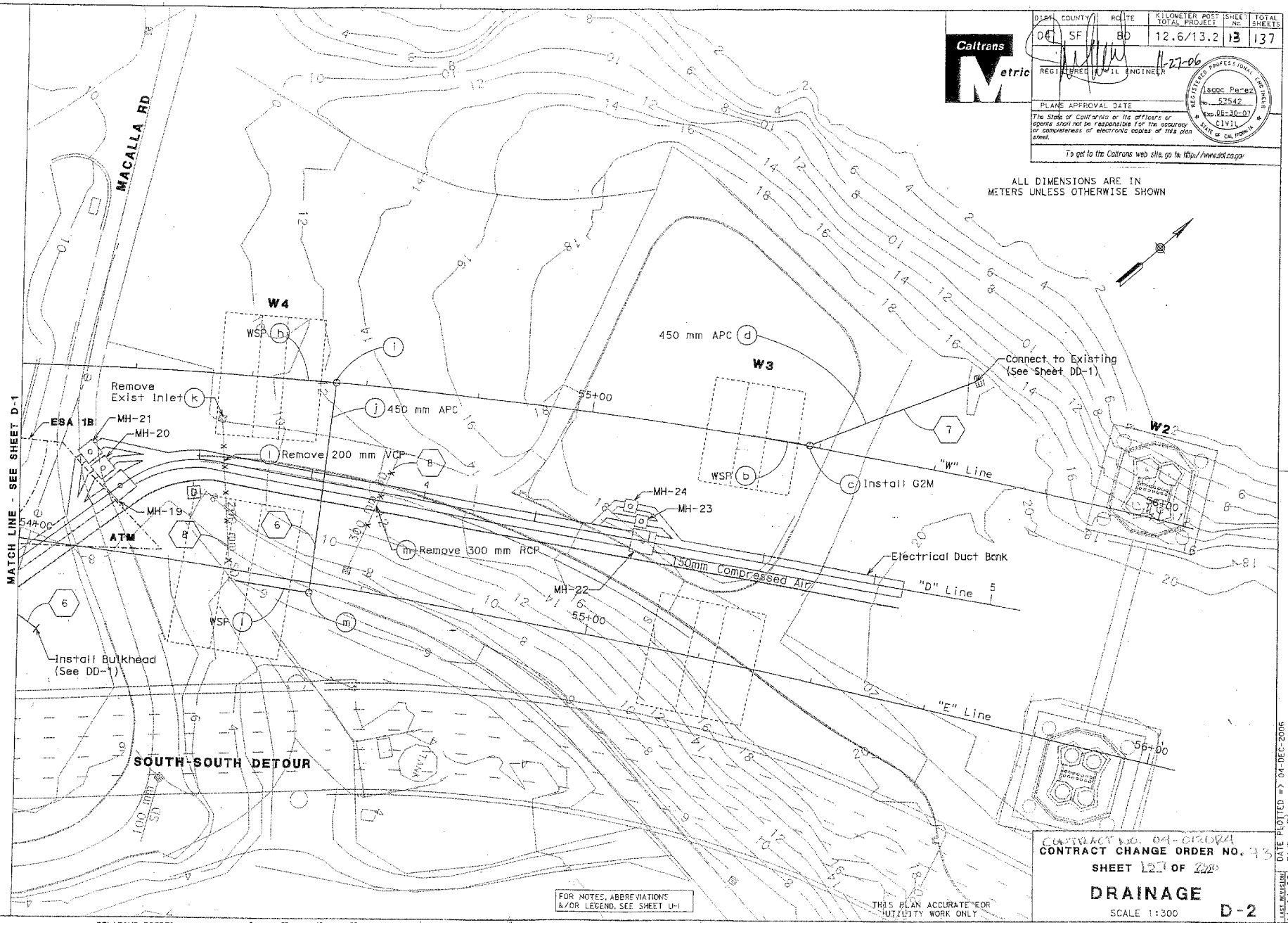

ALL DIMENSIONS ARE IN METERS UNLESS OTHERWISE SHOWN

DIST	COUNTY	ROUTE	KILOMETER POST TOTAL PROJECT	SHEET NO.	TOTAL SHEETS
04	SF	80	12.6/13.2	13	137

REGISTERED CIVIL ENGINEER — 11-27-06

Isaac Perez
No. 52542
Exp. 06-30-07
CIVIL
REGISTERED PROFESSIONAL ENGINEER
STATE OF CALIFORNIA

PLANS APPROVAL DATE

The State of California or its officers or agents shall not be responsible for the accuracy or completeness of electronic copies of this plan sheet.

To get to the Caltrans web site, go to: http://www.dot.ca.gov

CONTRACT NO. 04-0120R4
CONTRACT CHANGE ORDER NO. 73
SHEET 121 OF 220

DRAINAGE

SCALE 1:300

D-2

STATE OF CALIFORNIA - DEPARTMENT OF TRANSPORTATION
Caltrans PROJECT DEVELOPMENT
PROJECT ENGINEER: T. T. LAI
CALCULATED/DESIGNED BY
CHECKED BY
DATE REVISED BY
DATE REVISED

LAST REVISION: 11-14-06
DATE PLOTTED => 04-DEC-2006
TIME PLOTTED => 14:46

DIST	COUNTY	ROUTE	KILOMETER POST TOTAL PROJECT	SHEET NO.	TOTAL SHEETS
04	SF	80	12.6/13.2	14	137

REGISTERED CIVIL ENGINEER

PLANS APPROVAL DATE

Isaac Perez
No. 53542
Exp. 06-30-07
CIVIL
REGISTERED PROFESSIONAL ENGINEER
STATE OF CALIFORNIA

The State of California or its officers or agents shall not be responsible for the accuracy or completeness of electronic copies of this plan sheet.

To get to the Caltrans web site, go to: http://www.dot.ca.gov

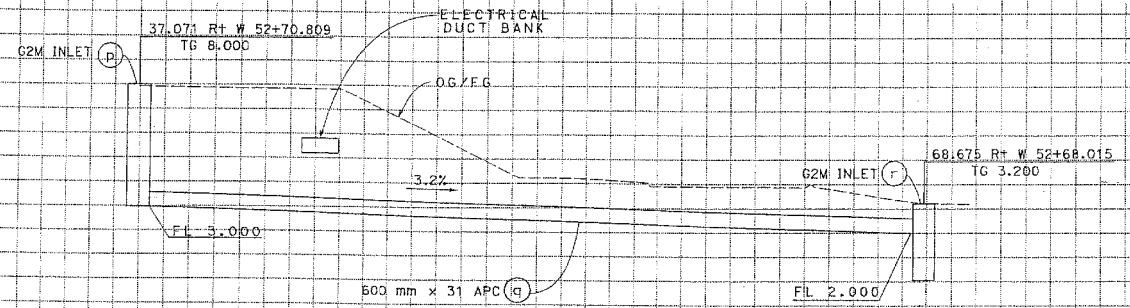

DRAINAGE SYSTEM No. 1

CONTRACT NO. 04-0F2004

CONTRACT CHANGE ORDER NO.

SHEET OF

DRAINAGE PROFILES

SCALE HORIZ 1:100
VERT. 1:100

ALL DIMENSIONS ARE IN METERS UNLESS OTHERWISE SHOWN

DP-1

STATE OF CALIFORNIA - DEPARTMENT OF TRANSPORTATION
Caltrans PROJECT DEVELOPMENT
PROJECT ENGINEER: T. T. LAI
CALCULATED/DESIGNED BY
CHECKED BY
DATE REVISED BY
DATE REVISED

Station
m^3 Exc / Emb

1ST REVISION DATE PLOTTED => 29-NOV-2006
DATE PLOTTED => 11-10-06 TIME PLOTTED => 11:45

DIST	COUNTY	ROUTE	KILOMETER POST TOTAL PROJECT	SHEET No	TOTAL SHEETS
04	SF	80	12.6/13.2	15	137

Caltrans Metric

11-27-06

REGISTERED CIVIL ENGINEER

PLANS APPROVAL DATE

REGISTERED PROFESSIONAL ENGINEER Isaac Perez No. 53542 Exp. 06-30-07 CIVIL STATE OF CALIFORNIA

The State of California or its officers or agents shall not be responsible for the accuracy or completeness of electronic copies of this plan sheet.

To get to the Caltrans web site, go to: http://www.dot.ca.gov

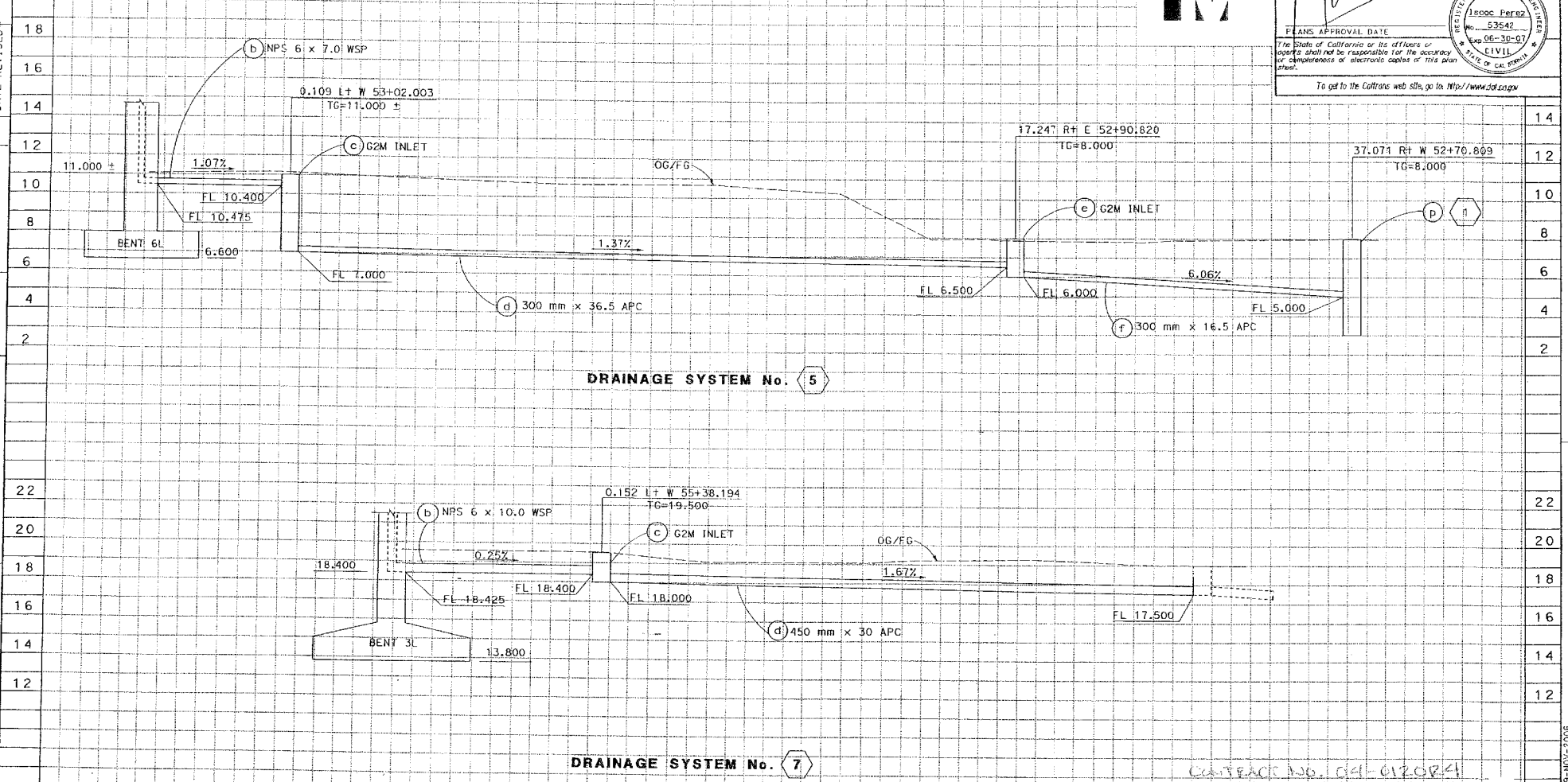

CONTRACT NO. 04-012084

CONTRACT CHANGE ORDER NO. 75

SHEET 159 OF 280

DRAINAGE PROFILES

SCALE HORIZ 1:100 VERT 1:100

ALL DIMENSIONS ARE IN METERS UNLESS OTHERWISE SHOWN

DP-2

DATE REVISED | DESIGNED BY | CHECKED BY | T. T.

PROJECT DEVELOPMENT

Station | m³ Exc Emb

LAST REVISION 11-14-06 | DATE PLOTTED => 29-NOV-2006 | TIME PLOTTED => 11:47

RELATIVE BORDER SCALE IS IN MILLIMETERS 0 20 40 60 80

USERNAME => tioi

CH 04251

EA 012084

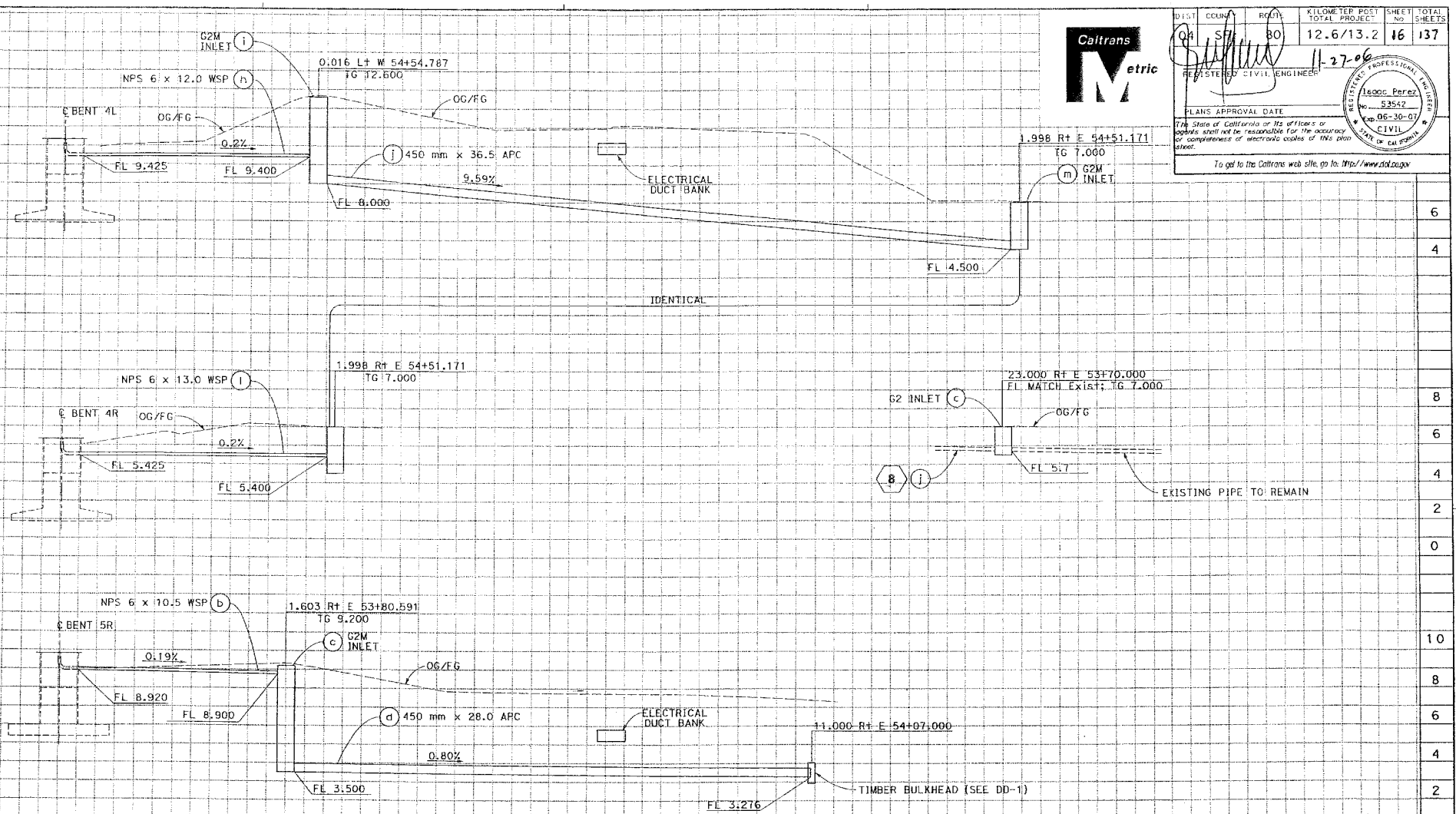

DRAINAGE SYSTEM No. 6

CONTRACT CHANGE ORDER NO.

SHEET OF

DRAINAGE PROFILES

SCALE HORIZ 1:100
VERT 1:100

DP-3

ALL DIMENSIONS ARE IN METERS UNLESS OTHERWISE SHOWN

DIST	COUNTY	ROUTE	KILOMETER POST TOTAL PROJECT	SHEET NO	TOTAL SHEETS
04	SF	80	12.6/13.2	16	137

REGISTERED CIVIL ENGINEER — 11-27-06

PLANS APPROVAL DATE

Isaac Perez
No. 53542
Exp. 06-30-07
CIVIL
STATE OF CALIFORNIA

The State of California or its officers or agents shall not be responsible for the accuracy or completeness of electronic copies of this plan sheet.

To get to the Caltrans web site, go to: http://www.dot.ca.gov

DESIGNED BY T. T. LAI
CHECKED BY
DATE REVISED

Caltrans PROJECT DEVELOPMENT

LAST REVISION 11-15-06
DATE PLOTTED => 29-NOV-2006
TIME PLOTTED => 11:48

Station
m³ Exc Emb

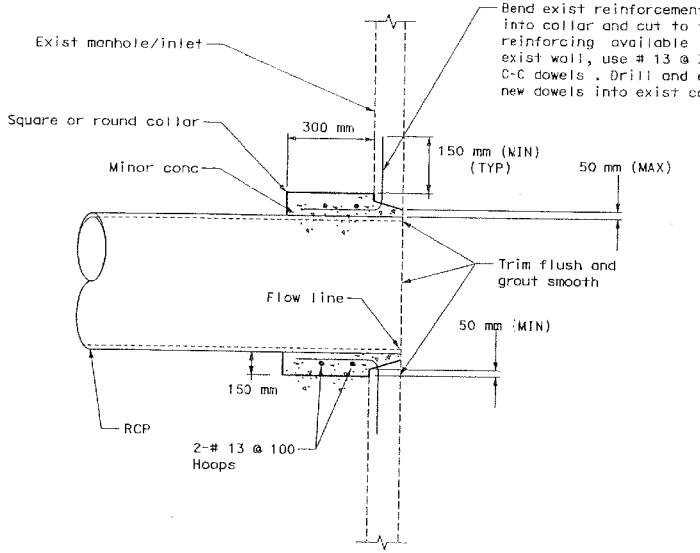

CONCRETE COLLAR PIPE CONNECTION TO EXISTING INLET

(7) (d)

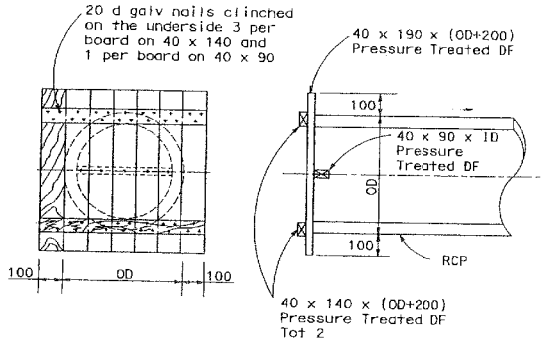

TIMBER BULKHEAD DETAIL

(6)

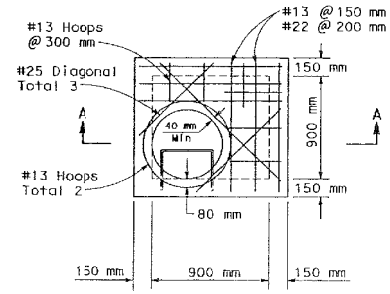

PLAN

NOTE: For details not shown, see Std Plan D73 - G2 Inlet.

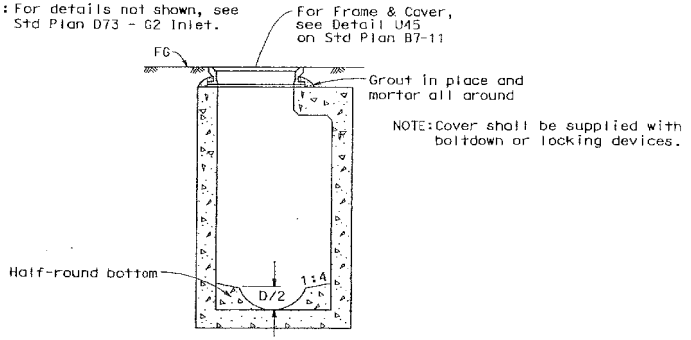

SECTION A-A

G2M INLET

(1) (5) (6) (7)

All Dimensions are in Millimeters unless otherwise shown

CONTRACT NO. 04-012024

CONTRACT CHANGE ORDER NO. 23

SHEET 161 **OF** 180

DRAINAGE DETAILS

NO SCALE

DD-1

Caltrans Metric

DIST	COUNTY	ROUTE	KILOMETER POST TOTAL PROJECT	SHEET NO	TOTAL SHEETS
04				17	137

REGISTERED CIVIL ENGINEER 11-27-06

PLANS APPROVAL DATE

The State of California or its officers or agents shall not be responsible for the accuracy or completeness of electronic copies of this plan sheet.

REGISTERED PROFESSIONAL ENGINEER Isaac Perez No. 53542 Exp. 06-30-07 CIVIL STATE OF CALIFORNIA

DESIGNED BY | CHECKED BY | DETAILED BY | CHECKED BY | REVISED BY | DATE REVISED

HYDRAULICS

LAST REVISION DATE PLOTTED => 29-NOV-2006
11-06-06 TIME PLOTTED => 11:44

FOR REDUCED PLANS ORIGINAL 0 20 40 60 80 USERNAME => tlai

ALTERNATIVE PIPE CULVERTS

RCP	STANDARD TYPE II MODIFIED CEMENT
METALS	14-GAGE (2 mm) BITUMINOUS CORRUGATED STEEL PIPE (CSP); IF BITUMINOUS COATING IS NOT ALLOWED, USE POLYMERIC SHEET COATING FOR 18-GAGE (1.3 mm) CSP.
	1.5 mm CORRUGATED ALUMINIZED PIPE (CAP) OR 1.6 mm CORRUGATED ALUMINIZED STEEL PIPE (CASP).
PLASTIC	PLASTIC PIPE

ABBREVIATIONS:

(N) NOT A SEPERATE PAY ITEM, FOR INFORMATION ONLY
RSP ROCK SLOPE PROTECTION

NOTE:

1. ALL JOINTS SHALL BE WATERTIGHT UNLESS OTHERWISE NOTED.

Caltrans Metric

DIST	COUNTY	ROUTE	KILOMETER POST TOTAL PROJECT	SHEET No	TOTAL SHEETS
08	SBd	180	12.6/13.9	18	137

REGISTERED CIVIL ENGINEER 11-22-06

PLANS APPROVAL DATE

Isaac Perez No. 53542 Exp 06-30-07 CIVIL — REGISTERED PROFESSIONAL ENGINEER — STATE OF CALIFORNIA

The State of California or its officers or agents shall not be responsible for the accuracy or completeness of electronic copies of this plan sheet.

To get to the Caltrans web site, go to: http://www.dot.ca.gov

DRAINAGE QUANTITIES

DRAINAGE SYSTEM No.	DRAINAGE UNIT	REMOVE CULVERT	REMOVE INLET	ABANDON PIPE	APC 300 mm	APC 375 mm	APC 450 mm	APC 600 mm	FES 300 mm	FES 375 mm	FES 525 mm	150 mm WSP	FRAME & GRATE (N) (U-45 MANHOLE)	MISCELLANEOUS IRON & STEEL	MINOR CONCRETE (MINOR STRUCTURE)	MINOR CONCRETE (Misc CONSTRUCTION)	HEIGHT OF INLET (N)	MAXIMUM COVER (N)	DESCRIPTION	STATION	DRAINAGE PLAN SHEET No.	DRAINAGE SYSTEM No.	DRAINAGE UNIT
		m	EA		m				EA			m	EA	kg	m^3		m^2	m					
1	p												1	200	6.17			5.0	G2M INLET	37.071 Rt W 52+70.809		1	p
	q							31										4.5	600mm APC				q
	r												1	200	4.12			3.2	G2M INLET	68.675 Rt W 52+68.015			r
5	b											7						0.3	150mm WSP			5	b
	c												1	200	5.03			4.0	G2M INLET	0.109 Lt W 53+02.003			c
	d				37													3.8	300mm APC				d
	e												1		1.70			2.0	G2M INLET	17.247 Rt E 52+90.820			e
	f				17													2.6	300mm APC				f
6	a																					6	a
	b											11						0.3	150mm WSP				b
	c												1	200	6.97			5.7	G2M INLET	1.603 Rt E 53+80.591			c
	d						28											5.2	450mm APC				d
	h											12						3.2	150mm WSP				h
	i												1	200	5.72			4.6	G2M INLET	0.016 Lt W 54+54.787			i
	j						37											4.5	450mm APC				j
	l											13						1.6	150mm WSP				l
	m												1	200	3.32			2.5	G2M INLET	1.998 Rt E 54+51.171			m
7	b											10						0.7	150mm WSP			7	b
	c												1	200	1.39			1.5	G2M INLET	0.152 Lt W 55+38.194			c
	d						30											1.3	450mm APC w/ CONCRETE COLLAR				d
8	a		1																REMOVE INLET			8	a
	b	35																	REMOVE CULVERT, 200mm CONCRETE				b
	c	20																	REMOVE CULVERT, 150mm				c
	d	30																	REMOVE CULVERT, 100mm WSP				d
	e		1																REMOVE INLET				e
	f	10																	REMOVE CULVERT, 150mm WSP				f
	g		1																REMOVE INLET				g
	h		1																REMOVE INLET				h
	i	10																	REMOVE CULVERT, 200mm VCP				i
	j	55																	REMOVE CULVERT, 200mm VCP				j
	k		1																REMOVE INLET				k
	l	60																	REMOVE CULVERT, 200mm VCP				l
	m	15																	REMOVE CULVERT, 300mm RCP				m
SHEET TOTAL		225	5		54		95	31				53		1600	34.5					SHEET	TOTAL		

CONTRACT NO. 06-0K120U4

CONTRACT CHANGE ORDER NO. 28

SHEET 18 OF 137

DRAINAGE QUANTITIES DQ-1

DATE REVISED | CHECKED BY | DESIGNED BY | T. T. LAI | Caltrans PROJECT DEVELOPMENT

LAST REVISION DATE PLOTTED => 29-NOV-2006 TIME PLOTTED => 11:39
11-16-06

DIST	COUNTY	ROUTE	KILOMETER POST TOTAL PROJECT	SHEET NO.	TOTAL SHEETS
04	SF	80	12.6/13.2	19	137

11-27-06
REGISTERED CIVIL ENGINEER

T.T. Lai
No. 63630
Exp. 2-30-08
CIVIL
STATE OF CALIFORNIA

PLANS APPROVAL DATE

The State of California or its officers or agents shall not be responsible for the accuracy or completeness of electronic copies of this plan sheet.

To get to the Caltrans web site, go to: http://www.dot.ca.gov

NOTES

1. LOCATIONS OF EXISTING UTILITY FACILITIES ON THESE PLANS ARE APPROXIMATE AND SHALL BE VERIFIED BY THE CONTRACTOR PRIOR TO CONSTRUCTION.
2. ELEVATION IS BASED ON 1929 NATIONAL GEODETIC VERTICAL DATUM (NGVD29).
3. CONTRACTOR TO PROTECT UC SEISMOGRAPH STATION.
4. ALL US NAVY OWNED UTILITY LINES ARE UNDER CARE OF CCSF. CONTRACTOR TO CONTACT CCSF REPRESENTATIVE FOR RELOCATION OF ALL NAVY UTILITY LINES
5. USE LONG ELBOWS WHEREVER SPACE PERMITS.

LEGEND

EXISTING SYMBOL	PROPOSED SYMBOL	UTILITY	OWNERSHIP
sp	SP	SALTWATER PIPE	US NAVY
sd	SD	STORM DRAINAGE	CITY OF SF/CALTRANS
tv	TV	CABLE TELEVISION	US NAVY/AT & T
cc	CA	COMPRESSED AIR	CALTRANS
g	G	GAS LINE	PG & E
w	W	WATER LINE	SFWD
s	S	SEWER LINE	CCSF
t	T	TELEPHONE LINE	SBC
fo	FO	FIBER OPTIC	CALTRANS/SBC
w(r)	W(R)	RECLAIM WATER	CCSF
w(d)	W(D)	DOMESTIC WATER	CALTRANS
e	E	ELECTRICAL	CCSF

ABBREVIATIONS

abd	ABANDONED
CA	COMPRESSED AIR
DIP	DUCTILE IRON PIPE
E	ELECTRIC
FA	FIRE ALARM
FM	FORCE MAIN
G	GAS
kV	KILO VOLT
MCI	MCI TELECOMMUNICATIONS
PACBELL	PACIFIC BELL
PH	POTHOLE
SFWD	SAN FRANCISCO WATER DEPARTMENT
SP	SALTWATER PIPE
SS	SANITARY SEWER
ST	STEEL
TCE	TEMPORARY CONSTRUCTION EASEMENT
U	UTILITY
UNK	UNKNOWN
USCG	UNITED STATES COAST GUARD
V	VOLTS
VCP	VITRIFIED CLAY PIPE
W	WATER
CCSF	CITY AND COUNTY OF SAN FRANCISCO
FH	FIRE HYDRANT
OH	OVERHEAD
TOS	CALTRANS TRAFFIC OPERATIONS SYSTEM
UC	UNIVERSITY OF CALIFORNIA
TCE	TEMPORARY CONSTRUCTION EASEMENT
N	NORTHING
E	EASTING
DUCT	DUCT BANK LOCATION CALL OUT
G.I.	GALVENIZED PIPE
W.I.	WROUGHT PIPE

SYMBOLS

oC	CABLE VAULT
oCO	CLEANOUT
□E	ELECTRIC HANDHOLE
oE	ELECTRIC MANHOLE
E	ELECTRIC PULL BOX
FH	FIRE HYDRANT
oG	GAS VALVE
	LIGHT POLE
oSW	SALTWATER VALVE
MH	MANHOLE
	STORM DRAIN INLET
oT	TELEPHONE MANHOLE
□T	TELEPHONE VAULT
	UTILITY POLE
□U	UTILITY VAULT
oW	WATER VAULT
X	UTILITY SYSTEM
(X)	UTILITY NUMBER
	ABANDON UTILITY
	REMOVE UTILITY
	ENVIRONMENTAL SENSITIVE AREA (ESA)
D	MANUAL LOW POINT DRAIN
	AUTOMATIC AIR RELEASE VALVE
	GATE VALVE (WATER)
	WATER METER
	BACK FLOW PREVENTER ASSEMBLY (BPA)

POTHOLE LOCATION TABLE ●Parsons-Brinckerhoff

PH#	N	E	GROUND Elev	Depth Top	Depth Bottom	Description
1	647 420.083	1 836 055.575	9.342	0.203,	0.559	Elect Duct
2	647 400.405	1 836 067.454	9.008	0.229,	0.584	Elect Duct
3	647 385.889	1 836 078.450	8.723	0.686,	1.143	Elect Duct
4	647 366.048	1 836 089.639	8.214	0.330		Telephone Duct
			8.214	0.914		Elect Duct
5	647 228.376	1 835 850.118	52.390	0.635		Gas Line
6	647 218.427	1 835 883.635	49.704	0.610		Gas Line
7	647 207.362	1 835 910.928	47.188	0.635		Gas Line
8	647 227.408	1 835 927.749	44.482	0.635		Gas Line
9	647 246.035	1 835 903.128	41.656	6.584		Gas Line
10	647 259.847	1 835 873.518	39.247	0.533		Gas Line
11	647 346.523	1 836 101.699	7.348	0.432		Telephone Duct
			7.348	0.737		Elect Duct
12	647 335.685	1 836 108.716	6.959	0.254,	0.991	Elect Duct
13	647 337.315	1 836 107.508	6.929	0.406,	0.889	Elect Duct
14	647 322.430	1 836 090.791	7.272	0.356,	0.813	Elect Duct
15	647 285.691	1 836 057.200	2.934	0.051,	0.406	Elect Duct
16	647 262.886	1 836 042.078	2.712	0.178,	0.610	Elect Duct
17	647 239.488	1 836 023.237	5.324	0.508		Elect Duct
18	647 224.602	1 836 012.282	6.944	0.102		Unknown ½inch Pipe
			6.944	0.229		Unknown 2 inch pipe
			6.944	0.305,	0.762	Elect Duct
19	647 205.754	1 835 994.915	6.933	0.305 to 0.559		Unknown Conc. duct
			6.933	0.533,	0.787	Elect Duct
20	647 188.837	1 835 994.002	6.718	0.254		Unkown 2-inch pipe
			6.718	0.127,	0.483	Elect Duct
21	647 173.680	1 835 994.489	6.473	0.203		Unknown Duct

POTHOLE LOCATION TABLE ©Miller Pipeline

PH#	N	E	GROUND Elev	Depth Top	Depth Bottom	Description
22	647 434.909	1 836 172.817	17.690	0.81		200mm Water@0.48m N of Curb
23	647 441.684	1 836 192.934	19.303	0.79		200mm Water@2.41m N of Curb
24	647 379.468	1 836 141.375	3.99	0.91		150mm Force Main DIP
25	647 381.384	1 836 110.250	7.573	1.12		150mm Force Main DIP
26	647 394.219	1 836 098.563	8.643	0.89		150mm Water (Steel Pipe)
27	647 401.281	1 836 006.688	11.070	0.18,	0.60	Telephone Concrete Duct
28	647 416.625	1 836 015.750	11.026	0.15,	0.50	Telephone Concrete Duct
29	647 387.558	1 836 102.807	9.005	0.94		150mm Water@2.92m N of Curb
30	647 388.406	1 836 103.125	9.078	0.94		150mm Water@3.30m N of Curb
31	647 381.917	1 836 105.521	7.856	1.14		150mm Force Main DIP
32	647 389.866	1 836 099.677	8.426	1.27		150mm Force Main DIP
33	647 404.423	1 836 089.462	9.301	1.19		150mm Force Main DIP
34	647 417.724	1 836 078.731	9.922	1.09		150mm Force Main DIP
35	647 086.544	1 836 951.446	46.691	0.61		50mm Gas Pipe
36	647 084.019	1 836 941.477	47.874	0.64		50mm Gas Pipe
37	647 084.171	1 836 935.967	48.152	0.91		200mm PVC Water Pipe
38	647 209.977	1 835 902.540	47.955	1.24		300mm PVC Water Pipe
39	647 211.541	1 835 903.414	47.918	0.69		100mm Gas Pipe
40	647 239.347	1 835 915.214	42.944	0.66		100mm Gas Pipe

POTHOLE LOCATION TABLE ○BESS TESTLAB INC.

PH#	N	E	GROUND Elev	Depth Top	Depth Bottom	Description
41	647 192.0779	1 835 897.7825	48.180	0.685		100 mm Water
42	647 226.1212	1 836 918.2879	44.720	1.016		600 mm Water (Steel Pipe)
43	647 234.3527	1 835 922.4202	43.684	0.558		100 mm Gas Pipe
44	647 257.5268	1 835 866.4281	38.975	1.397		Elec Duct
45	647 259.1715	1 835 862.4140	38.680	1.168		600 mm Storm
46	647 302.6126	1 836 054.4681	7.753	1.676		50 mm Water/Elec (Steel Pipe)
47	647 306.6010	1 836 067.2572	7.633	2.286		Unknown Dia. Water
48	647 367.2809	1 836 096.0778	8.222	1.194		400 mm Water AC
49	647 364.2683	1 836 119.9865	7.213	2.946		300 mm Sewer VCP
50	647 420.0690	1 836 138.8842	13.726	1.676		200 mm Water AC
51	647 428.4990	1 836 148.5459	15.225	0.737		200 mm Water (Steel Pipe)
52	647 372.391	1 836 084.9930	8.352	1.625		200 mm Sewer (Steel Pipe)
53	647 361.8475	1 836 150.7173	3.655	2.057		200 mm Sewer
54	647 368.7542	1 836 143.1902	2.726	0.762		Sewer Force Main

POTHOLE LOCATION TABLE

Contract No. 04-0A2004

CONTRACT CHANGE ORDER NO. 73

SHEET 105 OF 136

UTILITY PLAN

U-1

STATE OF CALIFORNIA - DEPARTMENT OF TRANSPORTATION
Caltrans PROJECT DEVELOPMENT
PROJECT ENGR: T. T. LAI
CALCULATED/DESIGNED BY
CHECKED BY
DATE REVISED BY
DATE REVISED

LAST REVISION 11-06-06 | DATE PLOTTED => 28-NOV-2006 | TIME PLOTTED => 19:19

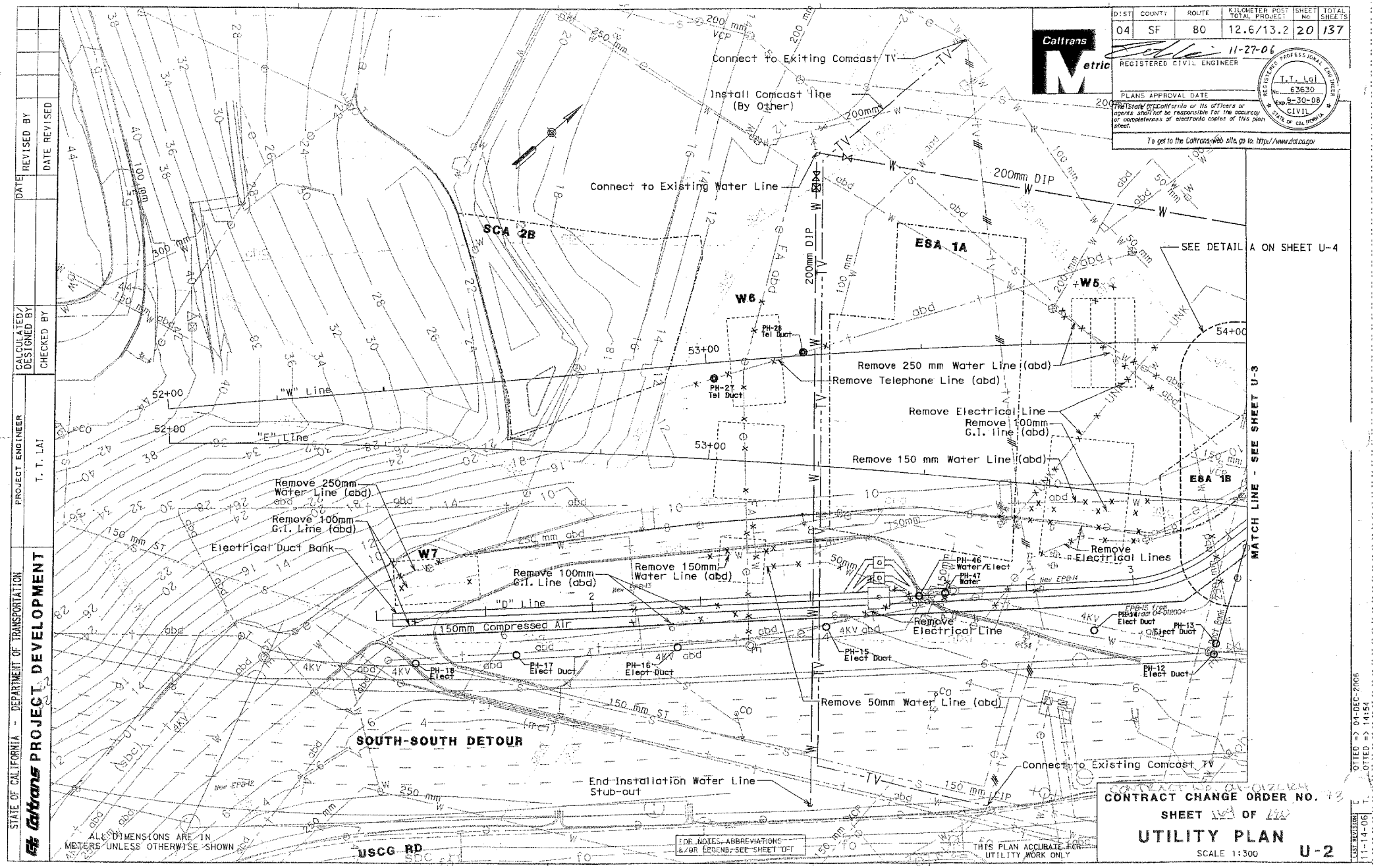

DIST	COUNTY	ROUTE	KILOMETER POST TOTAL PROJECT	SHEET No.	TOTAL SHEETS
04	SF	80	12.6/13.2	20	137

11-27-06
REGISTERED CIVIL ENGINEER

T. T. Lai
No. 63630
Exp. 9-30-08
CIVIL
REGISTERED PROFESSIONAL ENGINEER
STATE OF CALIFORNIA

PLANS APPROVAL DATE

The State of California or its officers or agents shall not be responsible for the accuracy or completeness of electronic copies of this plan sheet.

To get to the Caltrans Web site, go to: http://www.dot.ca.gov

DATE REVISED BY DATE REVISED

CALCULATED/ DESIGNED BY

CHECKED BY

PROJECT ENGINEER
T. T. LAI

STATE OF CALIFORNIA - DEPARTMENT OF TRANSPORTATION
Caltrans PROJECT DEVELOPMENT

ALL DIMENSIONS ARE IN METERS UNLESS OTHERWISE SHOWN

FOR NOTES, ABBREVIATIONS &/OR LEGEND, SEE SHEET UFT

THIS PLAN ACCURATE FOR UTILITY WORK ONLY

CONTRACT CHANGE ORDER NO. 13
SHEET 1 OF 1

UTILITY PLAN

SCALE 1:300

U-2

LAST REVISION
11-14-06 E OTTIED => 04-DEC-2006
T OTTIED => 14:54

STATE OF CALIFORNIA - DEPARTMENT OF TRANSPORTATION

Caltrans PROJECT DEVELOPMENT

PROJECT ENGINEER: T. T. LAI

CALCULATED/DESIGNED BY | CHECKED BY | DATE | REVISED BY | DATE REVISED

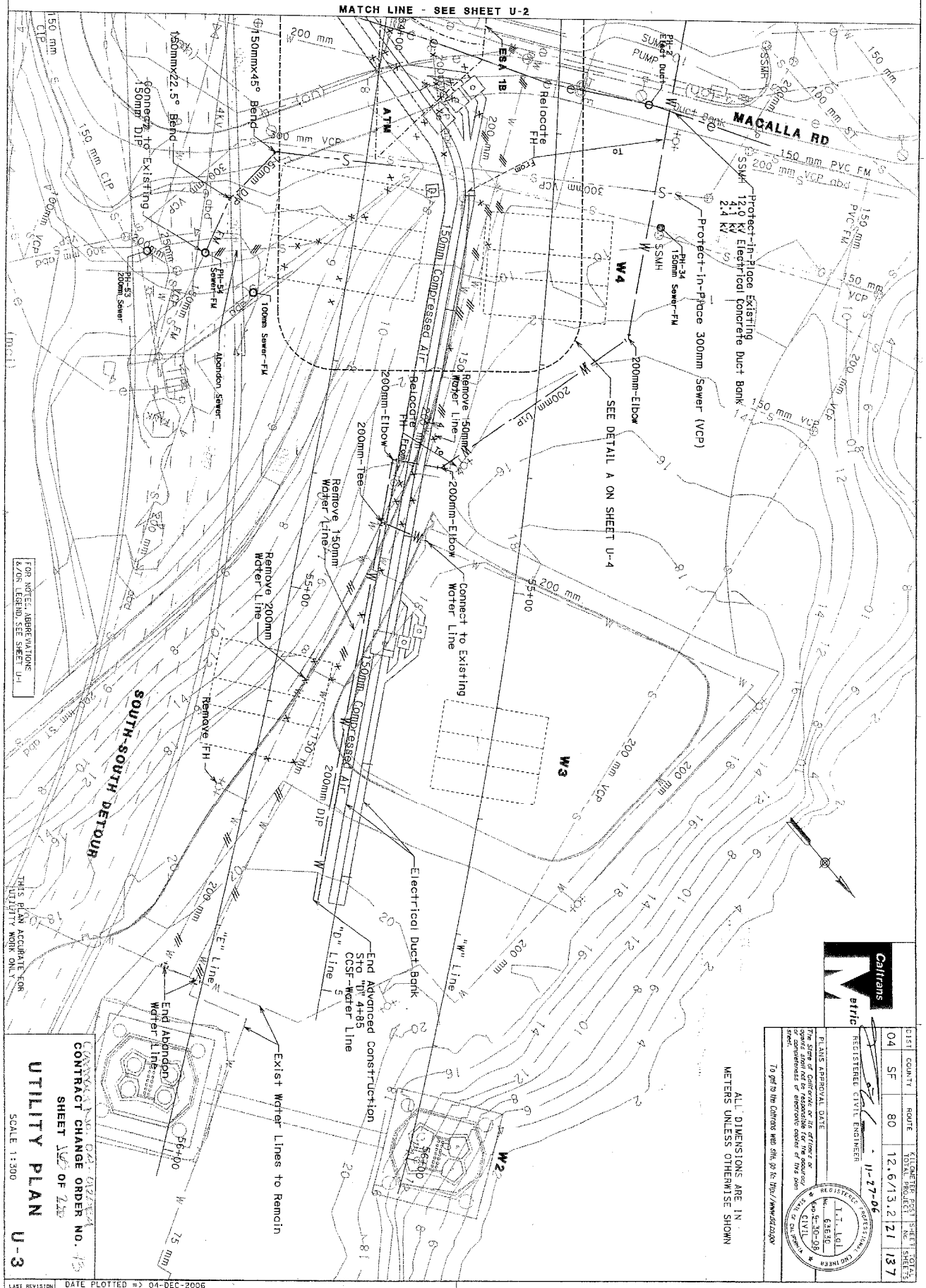

DIST	COUNTY	ROUTE	KILOMETER POST TOTAL PROJECT	SHEET NO.	TOTAL SHEETS
04	SF	80	12.6/13.2	21	137

REGISTERED CIVIL ENGINEER 11-27-06

PLANS APPROVAL DATE

The State of California or its officers or agents shall not be responsible for the accuracy or completeness of electronic copies of this plan sheet.

To get to the Caltrans web site, go to: http://www.dot.ca.gov

REGISTERED PROFESSIONAL ENGINEER T.T. Lai No. 63630 Exp. 9-30-08 CIVIL STATE OF CALIFORNIA

CONTRACT CHANGE ORDER NO. 13

SHEET 16 OF 220

UTILITY PLAN

SCALE 1:300

U-3

LAST REVISION 11-14-06

DATE PLOTTED => 04-DEC-2006

TIME PLOTTED => 14:57

DIST	COUNTY	ROUTE	KILOMETER POST TOTAL PROJECT	SHEET No.	TOTAL SHEETS
04	SF	80	12.6/13.2	22	137

11-27-06
REGISTERED CIVIL ENGINEER

PLANS APPROVAL DATE

REGISTERED PROFESSIONAL ENGINEER T.T. Lai No. 63630 Exp. 9-30-08 CIVIL STATE OF CALIFORNIA

The State of California or its officers or agents shall not be responsible for the accuracy or completeness of electronic copies of this plan sheet.

To get to the Caltrans web site, go to: http://www.dot.ca.gov

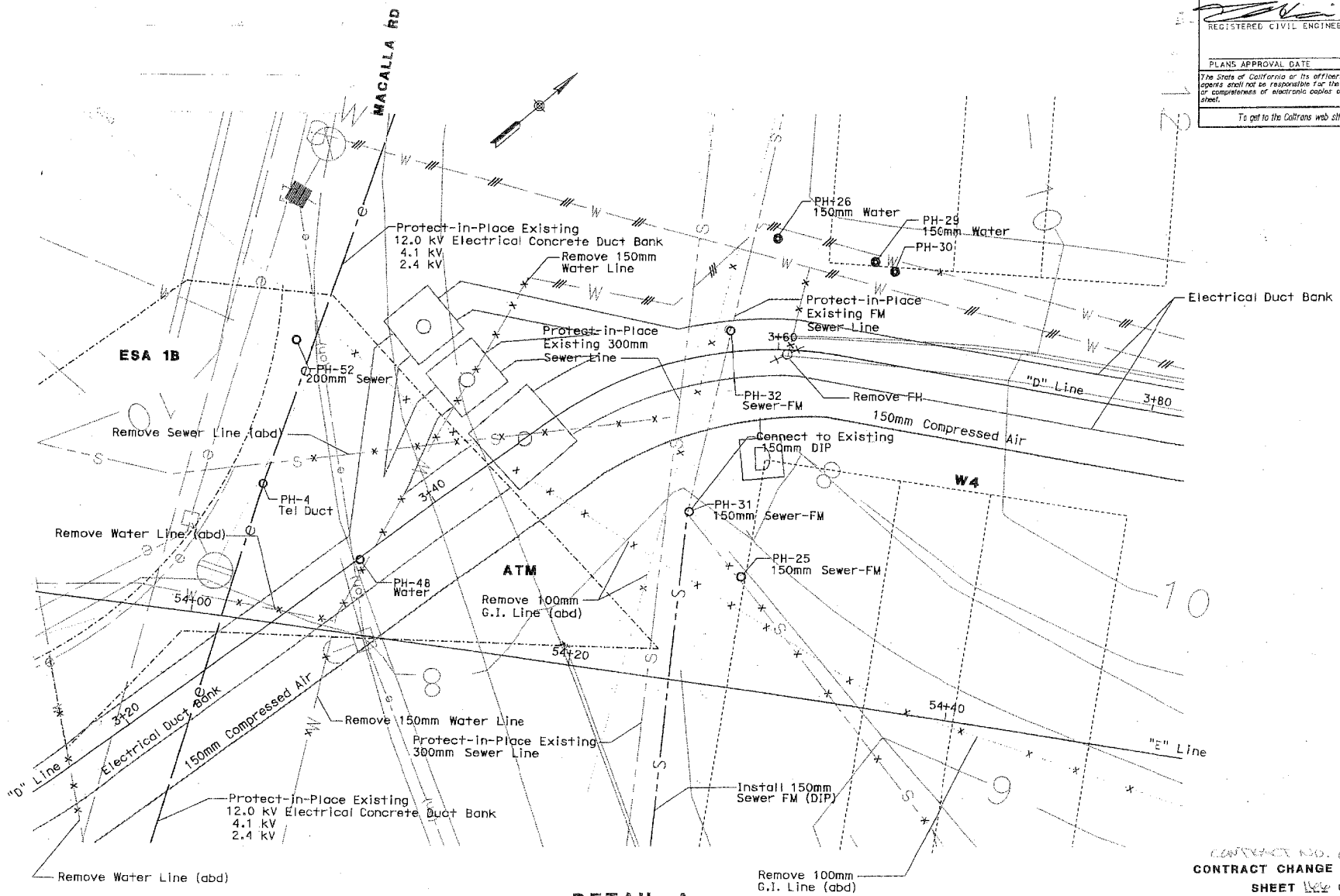

DETAIL A

ALL DIMENSIONS ARE IN METERS UNLESS OTHERWISE SHOWN

FOR NOTES, ABBREVIATIONS &/OR LEGEND, SEE SHEET U-1

THIS PLAN ACCURATE FOR UTILITY WORK ONLY

CONTRACT NO. 04-012.0R4
CONTRACT CHANGE ORDER NO. 73
SHEET 166 OF 200

UTILITY PLAN

SCALE 1:100

U-4

STATE OF CALIFORNIA - DEPARTMENT OF TRANSPORTATION
Caltrans PROJECT DEVELOPMENT

PROJECT ENGINEER T. T. LAI
CALCULATED/DESIGNED BY
CHECKED BY
DATE
REVISED BY
DATE REVISED

LAST REVISION 11-14-06
DATE PLOTTED => 04-DEC-2006
TIME PLOTTED => 14:59

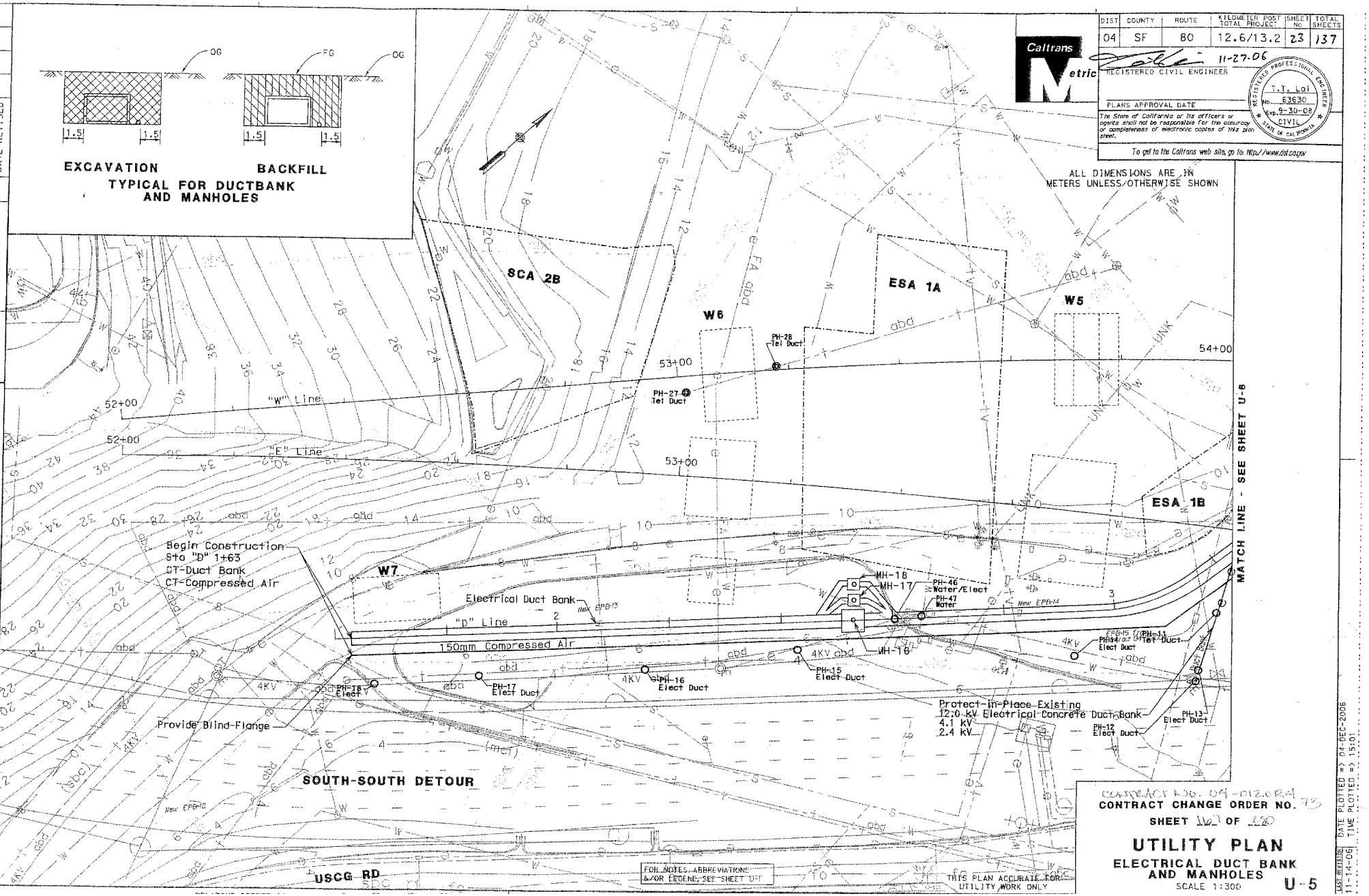

DIST	COUNTY	ROUTE	KILOMETER POST TOTAL PROJECT	SHEET NO.	TOTAL SHEETS
04	SF	80	12.6/13.2	23	137

Caltrans Metric

11-27-06
REGISTERED CIVIL ENGINEER

PLANS APPROVAL DATE

The State of California or its officers or agents shall not be responsible for the accuracy or completeness of electronic copies of this plan sheet.

REGISTERED PROFESSIONAL ENGINEER
T. T. Lai
No. 63630
Exp. 9-30-08
CIVIL
STATE OF CALIFORNIA

To get to the Caltrans web site, go to: http://www.dot.ca.gov

CONTRACT NO. 04-012064
CONTRACT CHANGE ORDER NO. 75
SHEET 102 OF 420

UTILITY PLAN
ELECTRICAL DUCT BANK AND MANHOLES
SCALE 1:300

U-5

DATE REVISED | REVISED BY
CALCULATED/DESIGNED BY
CHECKED BY
PROJECT ENGINEER: T. T. LAI
STATE OF CALIFORNIA - DEPARTMENT OF TRANSPORTATION
Caltrans PROJECT DEVELOPMENT

LAST REVISION 11-14-06
DATE PLOTTED => 04-DEC-2006
TIME PLOTTED => 15:01

DIST	COUNTY	ROUTE	KILOMETER POST TOTAL PROJECT	SHEET No	TOTAL SHEETS
04	SF	80	12.6/13.2	24	137

Caltrans Metric

11-27-06
REGISTERED CIVIL ENGINEER

REGISTERED PROFESSIONAL ENGINEER
T.T. Lai
No. 63630
Exp. 9-30-08
CIVIL
STATE OF CALIFORNIA

PLANS APPROVAL DATE

The State of California or its officers or agents shall not be responsible for the accuracy or completeness of electronic copies of this plan sheet.

To get to the Caltrans web site, go to: http://www.dot.ca.gov

ALL DIMENSIONS ARE IN METERS UNLESS OTHERWISE SHOWN

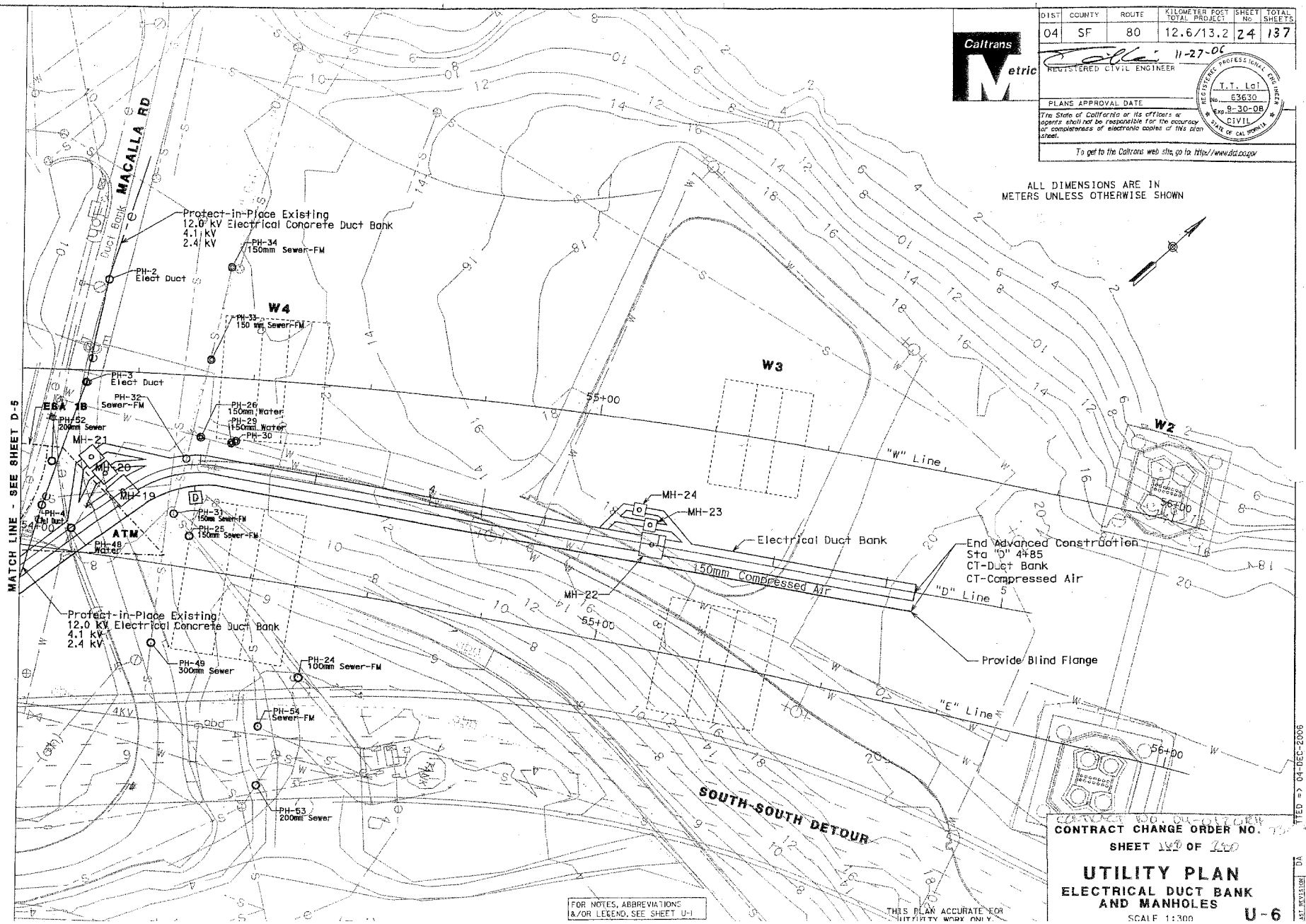

FOR NOTES, ABBREVIATIONS &/OR LEGEND, SEE SHEET U-1

THIS PLAN ACCURATE FOR UTILITY WORK ONLY

CONTRACT NO. 04-0120RH

CONTRACT CHANGE ORDER NO. 73

SHEET 140 OF 200

UTILITY PLAN

ELECTRICAL DUCT BANK AND MANHOLES

SCALE 1:300

U-6

STATE OF CALIFORNIA - DEPARTMENT OF TRANSPORTATION	PROJECT ENGINEER	CALCULATED/ DESIGNED BY	DATE
Caltrans PROJECT DEVELOPMENT	T. T. LAI	CHECKED BY	REVISED BY
			DATE REVISED

DATE REVISED 1-14-06 TIME PLOTTED => 04-DEC-2006 TIME PLOTTED => 15:04

DIST	COUNTY	ROUTE	KILOMETER POST TOTAL PROJECT	SHEET No	TOTAL SHEETS
04	SF	80	12.6/13.2	25	137

Caltrans Metrio

11-27-06
REGISTERED CIVIL ENGINEER

PLANS APPROVAL DATE

REGISTERED PROFESSIONAL ENGINEER
T.T. Lai
No. 63630
Exp. 9-30-08
CIVIL
STATE OF CALIFORNIA

The State of California or its officers or agents shall not be responsible for the accuracy or completeness of electronic copies of this plan sheet.

To get to the Caltrans web site, go to: http://www.dot.ca.gov

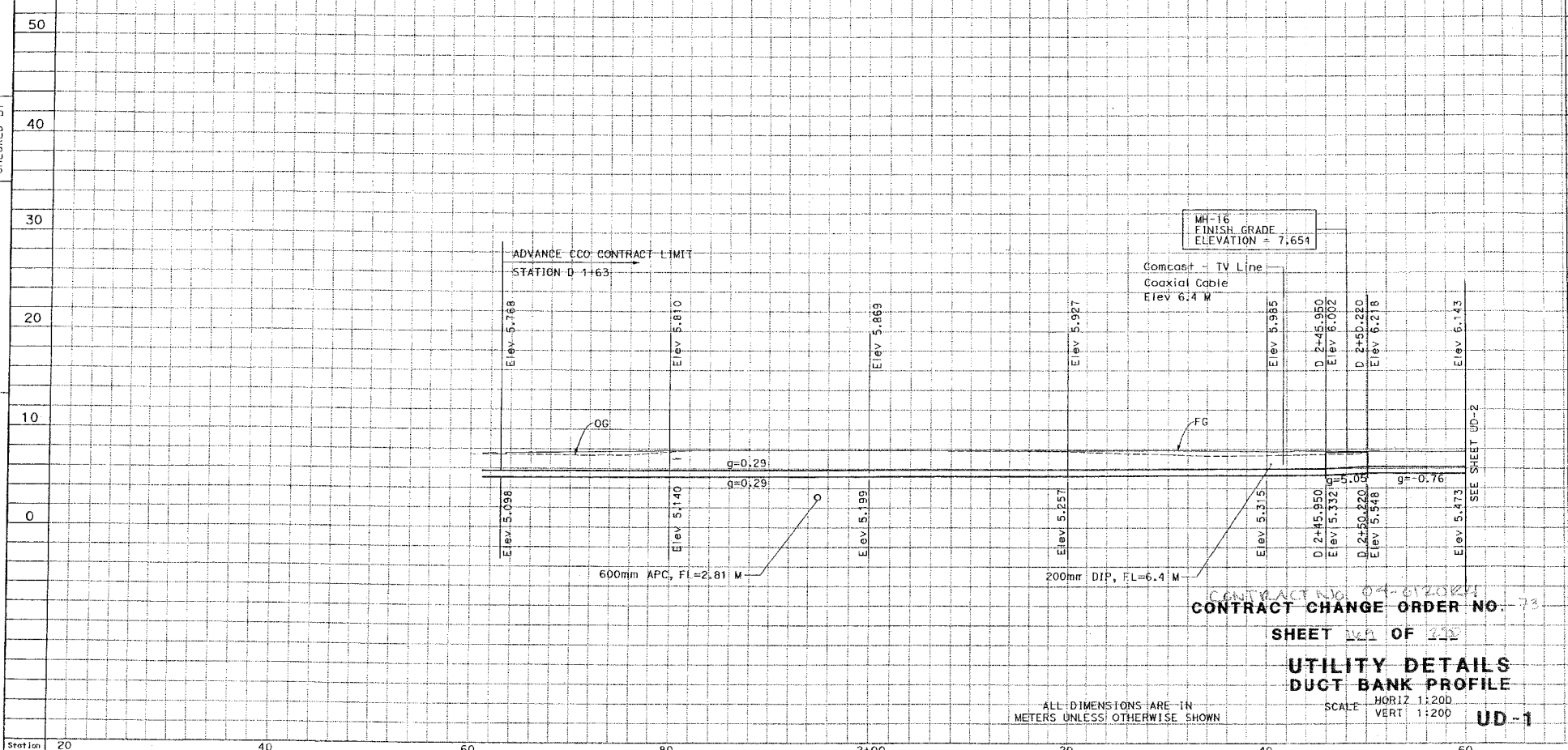

CONTRACT NO. 04-0120R4

CONTRACT CHANGE ORDER NO. 73

SHEET 169 OF 250

UTILITY DETAILS
DUCT BANK PROFILE

ALL DIMENSIONS ARE IN METERS UNLESS OTHERWISE SHOWN

SCALE HORIZ 1:200 VERT 1:200

UD-1

DATE REVISED

CHECKED BY

T.T.

PROJECT DEVELOPMENT

DATE PLOTTED => 28-NOV-2006
TIME PLOTTED => 20:33

LAST REVISION 11-06-06

RELATIVE BORDER SCALE 0 20 40 60 80

USERNAME => tlai

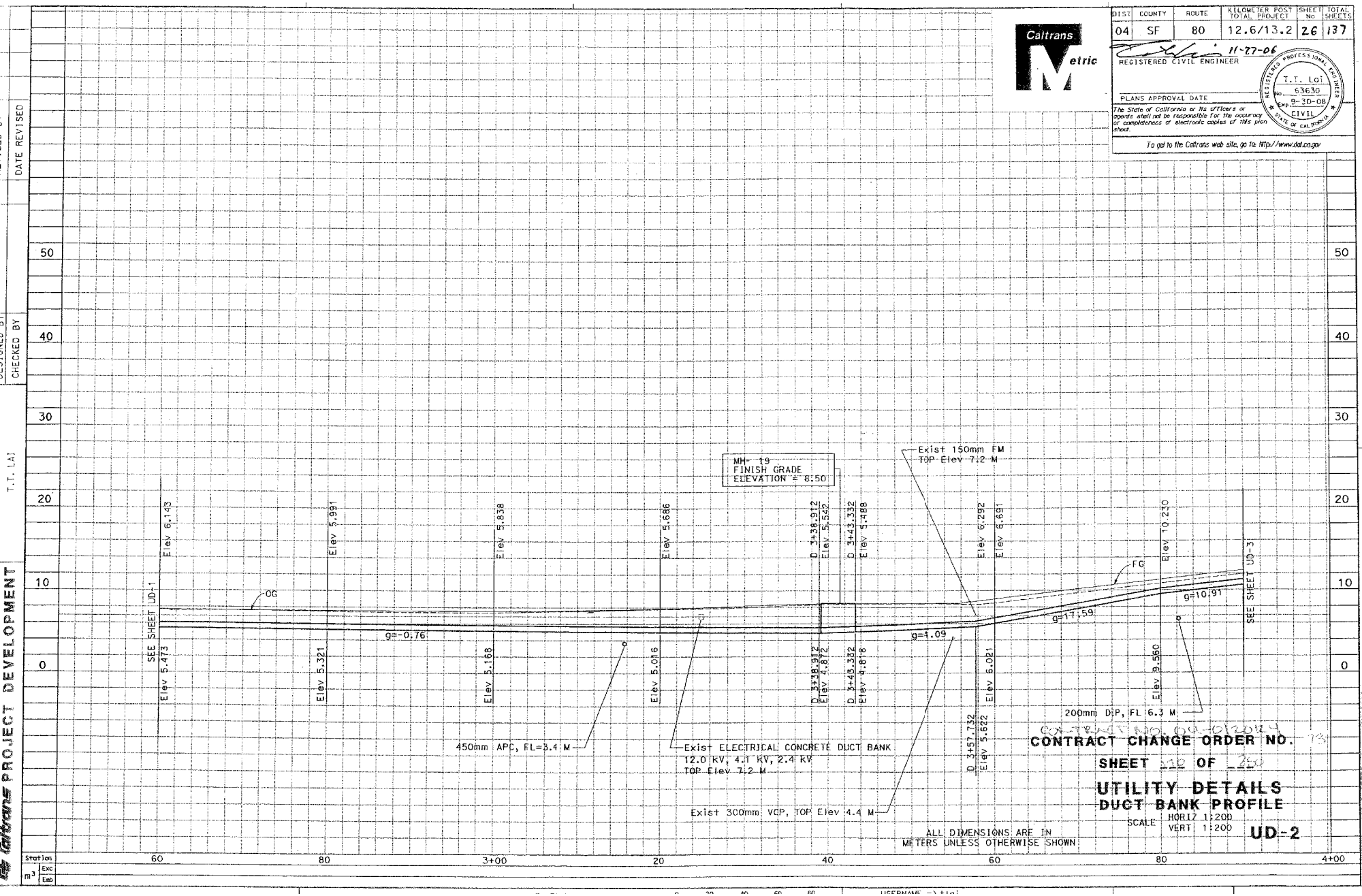
Caltrans Metric
DIST 04 | COUNTY SF | ROUTE 80 | KILOMETER POST TOTAL PROJECT 12.6/13.2 | SHEET No. 26 | TOTAL SHEETS 137
REGISTERED CIVIL ENGINEER 11-27-06
T.T. Lai No. 63630 Exp. 9-30-08 CIVIL
REGISTERED PROFESSIONAL ENGINEER STATE OF CALIFORNIA
PLANS APPROVAL DATE
The State of California or its officers or agents shall not be responsible for the accuracy or completeness of electronic copies of this plan sheet.
To get to the Caltrans web site, go to: http://www.dot.ca.gov
DESIGNED BY
CHECKED BY
T.T. LAI
DATE REVISED
caltrans PROJECT DEVELOPMENT
MH- 19
FINISH GRADE
ELEVATION = 8.50
Exist 150mm FM
TOP Elev 7.2 M
SEE SHEET UD-1
SEE SHEET UD-3
OG
FG
Elev 6.143
Elev 5.473
Elev 5.991
Elev 5.321
Elev 5.838
Elev 5.168
Elev 5.686
Elev 5.016
D 3+38.912
Elev 5.542
D 3+38.912
Elev 4.872
D 3+43.332
Elev 5.488
D 3+43.332
Elev 4.818
D 3+57.732
Elev 5.622
Elev 6.292
Elev 6.021
Elev 6.691
Elev 10.230
Elev 9.560
g=-0.76
g=1.09
g=17.59
g=10.91
450mm APC, FL=3.4 M
Exist ELECTRICAL CONCRETE DUCT BANK
12.0 KV, 4.1 KV, 2.4 KV
TOP Elev 7.2 M
Exist 300mm VCP, TOP Elev 4.4 M
200mm DIP, FL 6.3 M
CONTRACT NO. 06-012204
CONTRACT CHANGE ORDER NO. 13
SHEET 22 OF 25
UTILITY DETAILS
DUCT BANK PROFILE
SCALE HORIZ 1:200
VERT 1:200
UD-2
ALL DIMENSIONS ARE IN METERS UNLESS OTHERWISE SHOWN
Station 60 80 3+00 20 40 60 80 4+00
m3 Exc Emb
50 40 30 20 10 0
LAST REVISION DATE PLOTTED => 28-NOV-2006
11-06-06 TIME PLOTTED => 20:35
USERNAME => tlai

DIST	COUNTY	ROUTE	KILOMETER POST TOTAL PROJECT	SHEET No.	TOTAL SHEETS
04	SF	80	12.6/13.2	27	137

Caltrans Metric

11-27-06
REGISTERED CIVIL ENGINEER

PLANS APPROVAL DATE

REGISTERED PROFESSIONAL ENGINEER
T.T. Lai
No. 63630
Exp. 9-30-08
CIVIL
STATE OF CALIFORNIA

The State of California or its officers or agents shall not be responsible for the accuracy or completeness of electronic copies of this plan sheet.

To get to the Caltrans web site, go to: http://www.dot.ca.gov

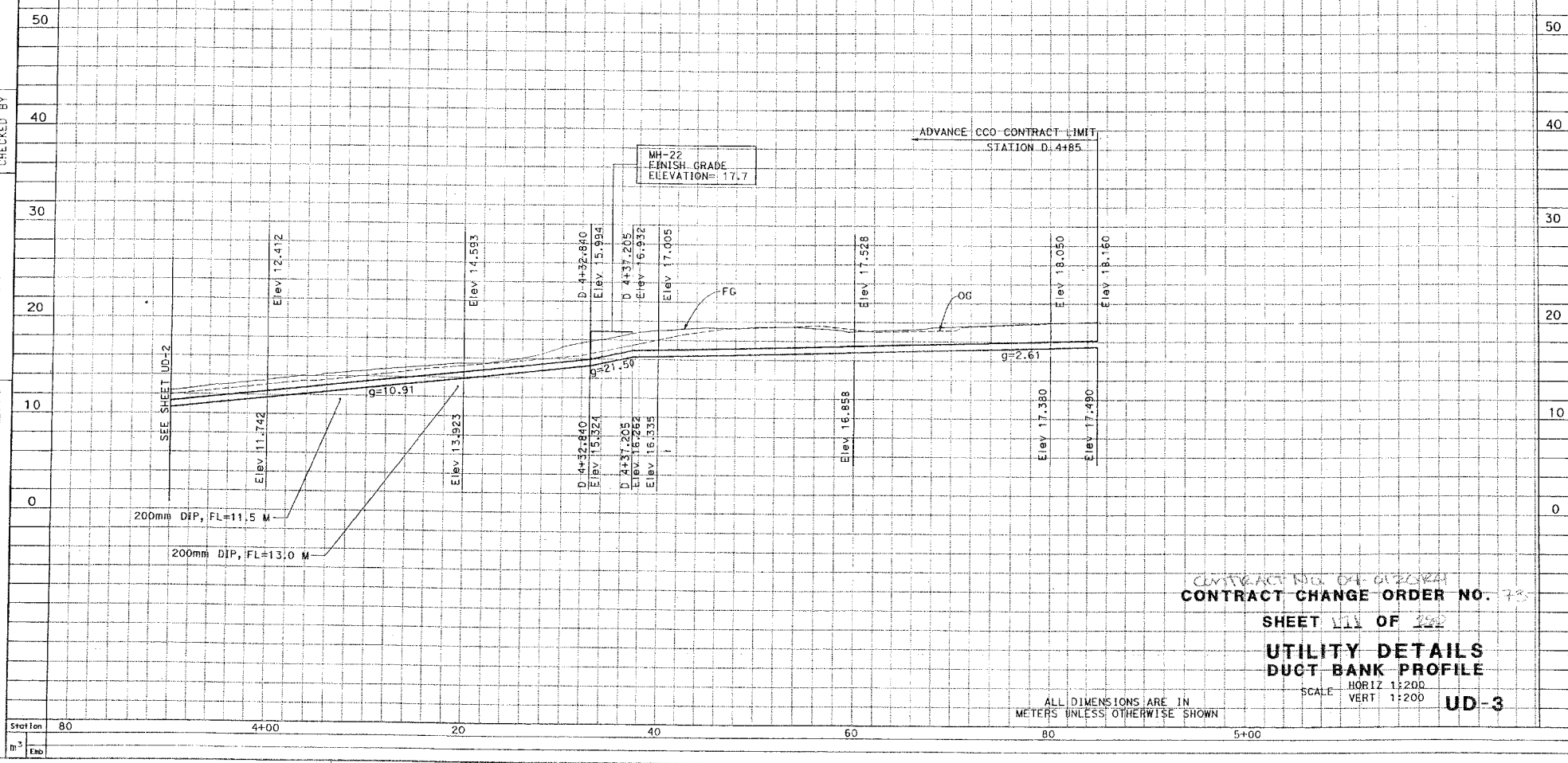

CONTRACT NO. 04-0120R4

CONTRACT CHANGE ORDER NO. 73

SHEET 111 OF 280

UTILITY DETAILS
DUCT BANK PROFILE

SCALE HORIZ 1:200
VERT 1:200

UD-3

ALL DIMENSIONS ARE IN METERS UNLESS OTHERWISE SHOWN

DATE REVISED
CHECKED BY
T.T.
PROJECT DEVELOPMENT

DATE PLOTTED => 28-NOV-2006
TIME PLOTTED => 20:37
LAST REVISION 11-06-06

RELATIVE BORDER SCALE IS IN MILLIMETERS 0 20 40 60 80
USERNAME => tlai

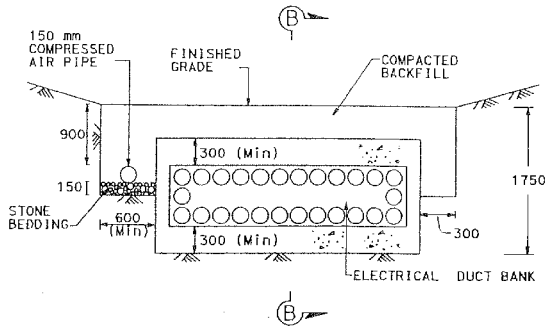

SECTION A-A

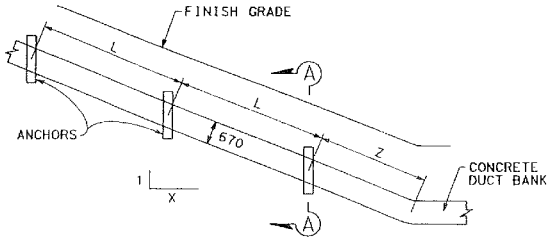

ELEVATION

CONCRETE DUCT BANK ANCHORS (3270mm (W) X 670mm (D))

TABLE A
(For 3270 X 670 DUCT BANK)

DUCT BANK SLOPE(1:X)	L (Max) (mm)	Z (Max) (mm)	Y (Max) (mm)
1:1	4570	1525	3000
1:1.5	5320	3000	4500
1:2	6140	4500	6000
1:2.5	6900	6000	7500
1:3	7500	7500	9000

TABLE B
(FOR 470 X 470 DUCT BANK)

DUCT BANK SLOPE(1:X)	LENGTH OF EXCAVATION IN STAGES (Max) (mm)	DUCT BANK ANCHOR SPACING (Max) (mm)
1:1	3000	5000
1:1.5	4500	6500
1:2	6000	8000
1:2.5	7500	9500
1:3	9000	11000

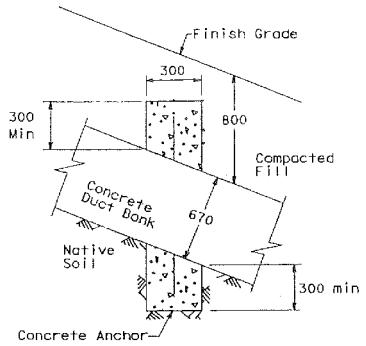

SECTION B-B

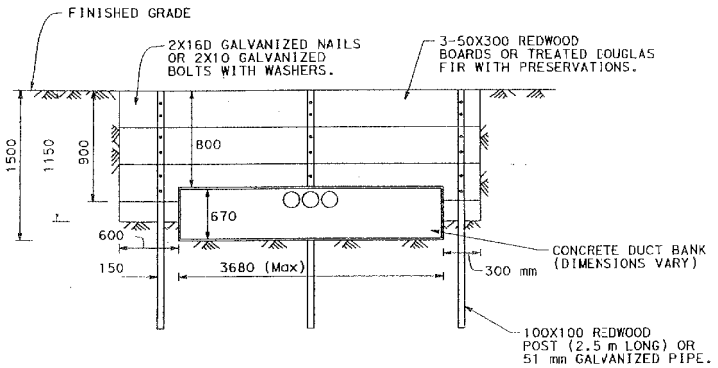

SECTION C-C

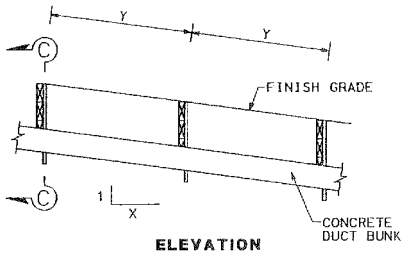

ELEVATION

SLOPE STABILIZER

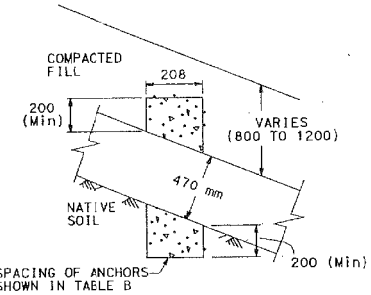

SPACING OF 470X470 DUCT BANK ANCHORS ON SLOPES

NOTES:

1. SPACING OF CONCRETE ANCHORS FOR DUCT BANK ON SLOPES BETWEEN VALVES SHOWN IN TABLE A MAY BE PROPORTIONED.
2. REDWOOD BOARDS SHALL BE PLACED ON THE HIGH GROUND SIDE OF THE POSTS.
3. TRENCH BACKFILL SHALL BE COMPACTED IN LIFTS. IN LIEU OF MECHANICAL COMPACTION, SOIL CEMENT MAY BE USED. HOWEVER, THE TOP 300MM OF BACKFILL SHALL BE NATIVE SOIL, MECHANICALLY COMPACTED.
4. SPACING OF GROUND STABILIZERS FOR SLOPES BETWEEN VALVES SHOWN IN TABLE A MAY BE PROPORTIONED.
5. FOR CONCRETE DUCT BANKS OF WIDTH SHORTER THAN 500MM, NO SHORING IS REQUIRED. HOWEVER, EXCAVATION SHALL BE CARRIED OUT IN STAGES WITH MAXIMUM LENGTH OF EXCAVATION SHOWN IN TABLE B.
6. TRENCH EXCAVATION PROPOSED HERE IN THIS DRAWING IS BASED UPON AN ASSUMPTION OF THE TRENCH BEING EXCAVATED IN DENSE SAND. SHOULD THE CONDITION OF SOIL DIFFER FROM WHAT IS ASSUMED HERE, THE CONTRACTOR SHALL STOP THE WORK AND NOTIFY THE ENGINEER IMMEDIATELY FOR INSTRUCTIONS.

CONTRACT NO. 04-0Y320U4

CONTRACT CHANGE ORDER NO 43

SHEET 112 **OF** 282

UTILITY DETAILS

DUCT BANK & MANHOLES

NO SCALE

UD-4

ALL DIMENSIONS ARE IN MILLIMETERS UNLESS OTHERWISE SHOWN

DIST	COUNTY	ROUTE	KILOMETER POST TOTAL PROJECT	SHEET NO.	TOTAL SHEETS
04	SF	80	12.6/13.2	28	137

REGISTERED CIVIL ENGINEER 11-27-06

T.T. Lai No. 63630 Exp. 9-30-08 CIVIL

PLANS APPROVAL DATE

The State of California or its officers or agents shall not be responsible for the accuracy or completeness of electronic copies of this plan sheet.

To get to the Caltrans web site, go to: http://www.dot.ca.gov

DATE REVISED | CHECKED BY | T. T. LAI | PROJECT DEVELOPMENT

LAST REVISION 11-06-06 | DATE PLOTTED => 28-NOV-2006 | TIME PLOTTED => 20:42

DIST	COUNTY	ROUTE	KILOMETER POST TOTAL PROJECT	SHEET No	TOTAL SHEETS
04	SF	80	12.6/13.2	29	137

REGISTERED CIVIL ENGINEER 11-27-06

PLANS APPROVAL DATE

T.T. Lai No. 63630 Exp. 9-30-08 CIVIL

The State of California or its officers or agents shall not be responsible for the accuracy or completeness of electronic copies of this plan sheet.

To get to the Caltrans web site, go to: http://www.dot.ca.gov

NOTE:
SEE E-SHEETS FOR DUCT BANK SECTIONS

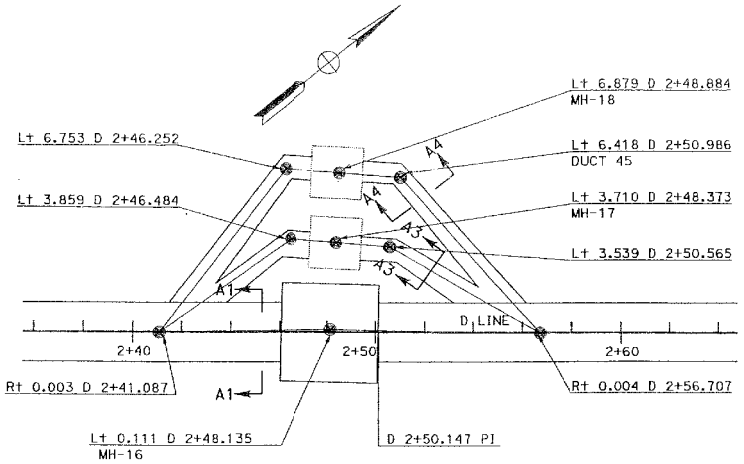

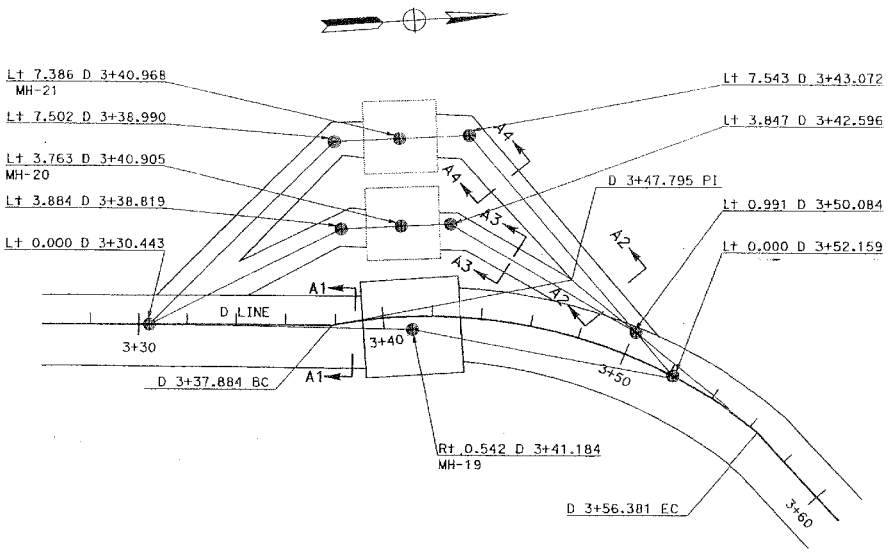

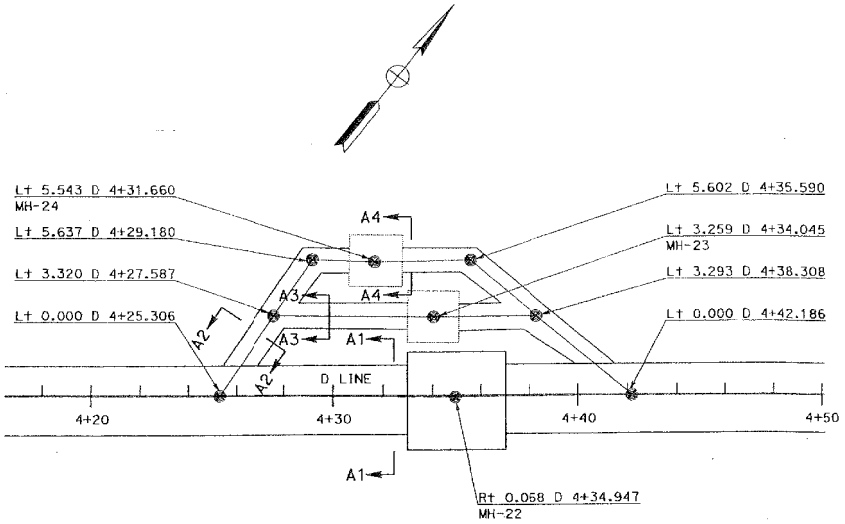

CONTRACT NO. 04-0120R4
CONTRACT CHANGE ORDER NO. 43
SHEET 178 OF 260

UTILITY DETAILS
DUCT BANK MANHOLE LAYOUT

NO SCALE

ALL DIMENSIONS ARE IN METERS UNLESS OTHERWISE SHOWN

UD-5

RELATIVE BORDER SCALE IS IN MILLIMETERS 0 20 40 60 80

USERNAME => tlai
DGN FILE => ADVANCED UD-5.dgn

CU 04251 EA 0120R4

DATE REVISED: 11-06-06
DATE PLOTTED => 28-NOV-2006
TIME PLOTTED => 20:44

PROJECT DEVELOPMENT
DATE REVISED
CHECKED BY
T.T.

DIST	COUNTY	ROUTE	KILOMETER POST TOTAL PROJECT	SHEET No.	TOTAL SHEETS
04	SF	80	12.6/13.2	30	137

Caltrans Metric

11-27-06
REGISTERED CIVIL ENGINEER

PLANS APPROVAL DATE

REGISTERED PROFESSIONAL ENGINEER
T.T. Lai
No. 63630
Exp. 9-30-08
CIVIL
STATE OF CALIFORNIA

The State of California or its officers or agents shall not be responsible for the accuracy or completeness of electronic copies of this plan sheet.

To get to the Caltrans web site, go to: http://www.dot.ca.gov

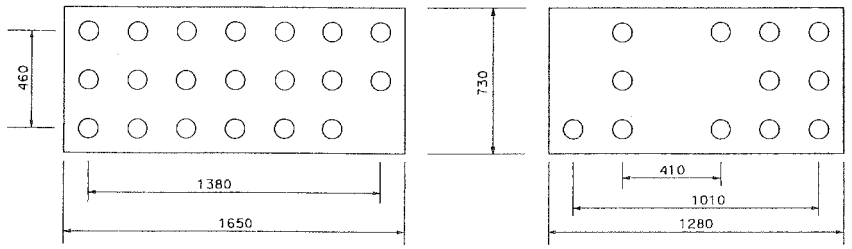

SECTION A1-A1

SECTION A2-A2

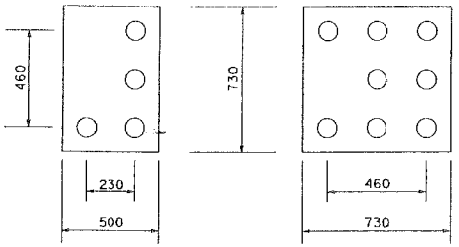

SECTION A3-A3

SECTION A4-A4

CONTRACT NO. 04-012084

CONTRACT CHANGE ORDER NO. 73

SHEET 174 **OF** 200

UTILITY DETAILS

DUCT BANK CROSS SECTIONS

NO SCALE

ALL DIMENSIONS ARE IN
MILLIMETERS UNLESS OTHERWISE SHOWN

UD-6

LAST REVISION 11-06-06 | DATE PLOTTED => 28-NOV-2006 | TIME PLOTTED => 20:46

Caltrans PROJECT DEVELOPMENT | T.T. LAI | CHECKED BY | DESIGNED BY | DATE REVISED

DIST	COUNTY	ROUTE	KILOMETER POST TOTAL PROJECT	SHEET No	TOTAL SHEETS
04	SF	80	12.6/13.2	31	137

11-27-06
REGISTERED CIVIL ENGINEER

PLANS APPROVAL DATE

The State of California or its officers or agents shall not be responsible for the accuracy or completeness of electronic copies of this plan sheet.

To get to the Caltrans web site, go to: http://www.dot.ca.gov

REGISTERED PROFESSIONAL ENGINEER
T.T. Lai
No. 63630
Exp. 9-30-08
CIVIL
STATE OF CALIFORNIA

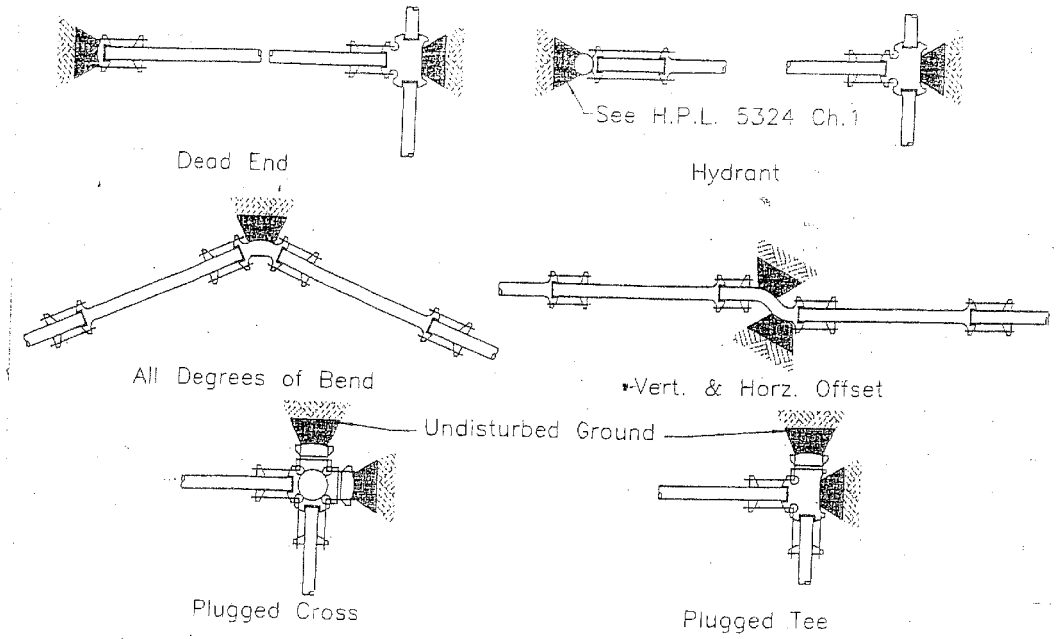

MINIMUM DIMENSIONS

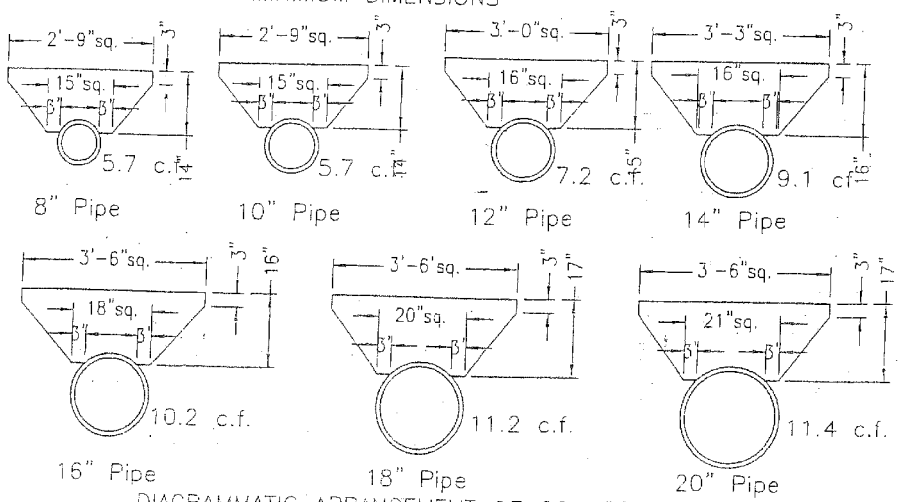

DIAGRAMMATIC ARRANGEMENT OF CONCRETE BLOCK BRACING. Bracing must bear against natural ground.

CONTRACT NO. 04-0120R4
CONTRACT CHANGE ORDER NO. 73
SHEET 175 **OF** 180

UTILITY DETAILS

NO SCALE

UD-7

STATE OF CALIFORNIA - DEPARTMENT OF TRANSPORTATION
Caltrans PROJECT DEVELOPMENT

PROJECT ENGINEER T.T. LAI

CALCULATED/DESIGNED BY
CHECKED BY
DATE
REVISED BY
DATE REVISED

LAST REVISION 11-03-06
DATE PLOTTED => 28-NOV-2006
TIME PLOTTED => 20:48

RELATIVE BORDER SCALE 0 20 40 60 80
USERNAME => tlai

DIST	COUNTY	ROUTE	KILOMETER POST TOTAL PROJECT	SHEET No	TOTAL SHEETS
04	SF	80	12.6/13.2	32	137

Caltrans Metric

11-27-06
REGISTERED CIVIL ENGINEER

PLANS APPROVAL DATE

The State of California or its officers or agents shall not be responsible for the accuracy or completeness of electronic copies of this plan sheet.

REGISTERED PROFESSIONAL ENGINEER T.T. Lai No. 63630 Exp. 9-30-08 CIVIL STATE OF CALIFORNIA

To get to the Caltrans web site, go to: http://www.dot.ca.gov

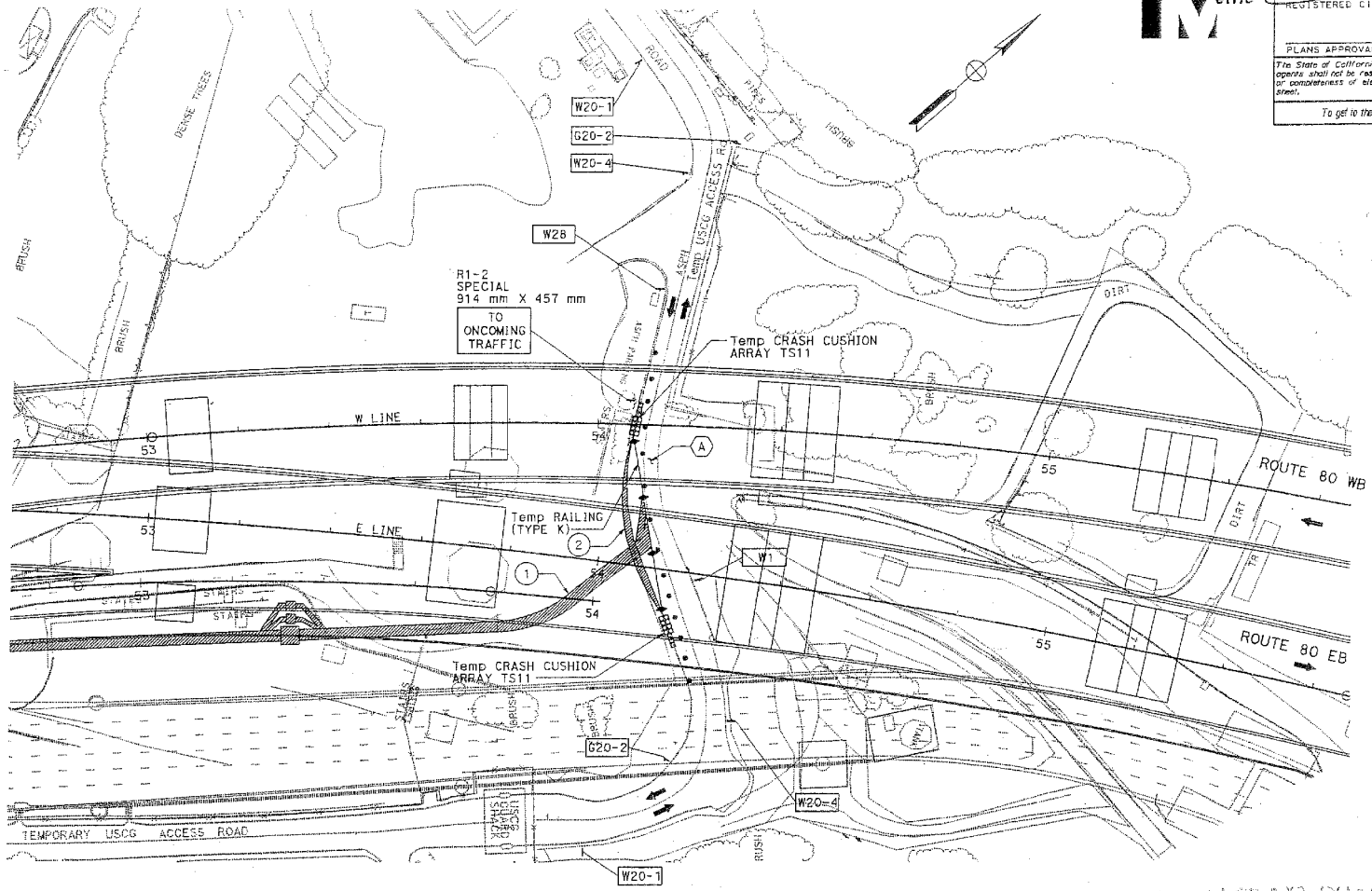

GENERAL NOTES:

1. ALL Temp RAILING (TYPE K) SHALL HAVE A 10:1 OR FLATTER APPROACH TAPER, WITH A Min OF 4.6 m OFFSET FROM ETW, UNLESS PROTECTED WITH CRASH CUSHIONS.
2. Temp RAILING (TYPE K) INSTALLED LESS THAN 0.6 m FROM THE EDGE OF EXCAVATION SHALL BE DOWELED.
3. LOCATION OF CONSTRUCTION AREA SIGNS SHOWN ARE APPROXIMATE, EXACT LOCATIONS WILL BE DETERMINED BY THE ENGINEER.
4. FOR SIGN DETAIL AND TYPICAL SIGN INSTALLATION, SEE STANDARD PLANS.

CONSTRUCTION

(1) INSTALL PORTIONS OF THE ELECTRICAL DUCK BANK.

(2) WIDEN Temp USCG ACCESS ROAD.

TRAFFIC HANDLING

(A) PROVIDE A MINIMUM OF 3.6 m ONE-WAY TRAFFIC CONTROL ON Temp USCG ACCESS ROAD.

LEGEND

- CONSTRUCTION AREA
- SIGN TO REMAIN
- RELOCATED SIGN
- Temp RAILING (TYPE K)
- CHANNELIZER (SURFACE MOUNTED)

FOR NOTES, ABBREVIATIONS &/OR LEGEND, SEE SHEET SC-1

THIS PLAN ACCURATE FOR STAGE CONSTRUCTION WORK ONLY

CONTRACT NO. 04-012084

CONTRACT CHANGE ORDER NO. 73

SHEET 118 OF 280

ALL DIMENSIONS ARE IN METERS UNLESS OTHERWISE SHOWN

TRAFFIC HANDLING PLAN
USCG ROAD - PHASE 1

SCALE 1:1000

TH-1

STATE OF CALIFORNIA - DEPARTMENT OF TRANSPORTATION

Caltrans PROJECT DEVELOPMENT

PROJECT ENGINEER T. T. LAI

CALCULATED/DESIGNED BY | CHECKED BY | DATE | REVISED BY | DATE REVISED

LAST REVISION 11-20-06 | PLOTTED => 04-DEC-2006 | PLOTTED => 15:31

DIST	COUNTY	ROUTE	KILOMETER POST TOTAL PROJECT	SHEET No.	TOTAL SHEETS
04	SF	80	12.6/13.2	33	137

Caltrans Metric

11-27-06
REGISTERED CIVIL ENGINEER

PLANS APPROVAL DATE

The State of California or its officers or agents shall not be responsible for the accuracy or completeness of electronic copies of this plan sheet.

To get to the Caltrans web site, go to: http://www.dot.ca.gov

T. T. LAI No. 63630 Exp. 9-30-06 CIVIL — REGISTERED PROFESSIONAL ENGINEER — STATE OF CALIFORNIA

DATE	REVISED BY	DATE REVISED

CALCULATED/DESIGNED BY

CHECKED BY

PROJECT ENGINEER: T. T. LAI

STATE OF CALIFORNIA - DEPARTMENT OF TRANSPORTATION
Caltrans PROJECT DEVELOPMENT

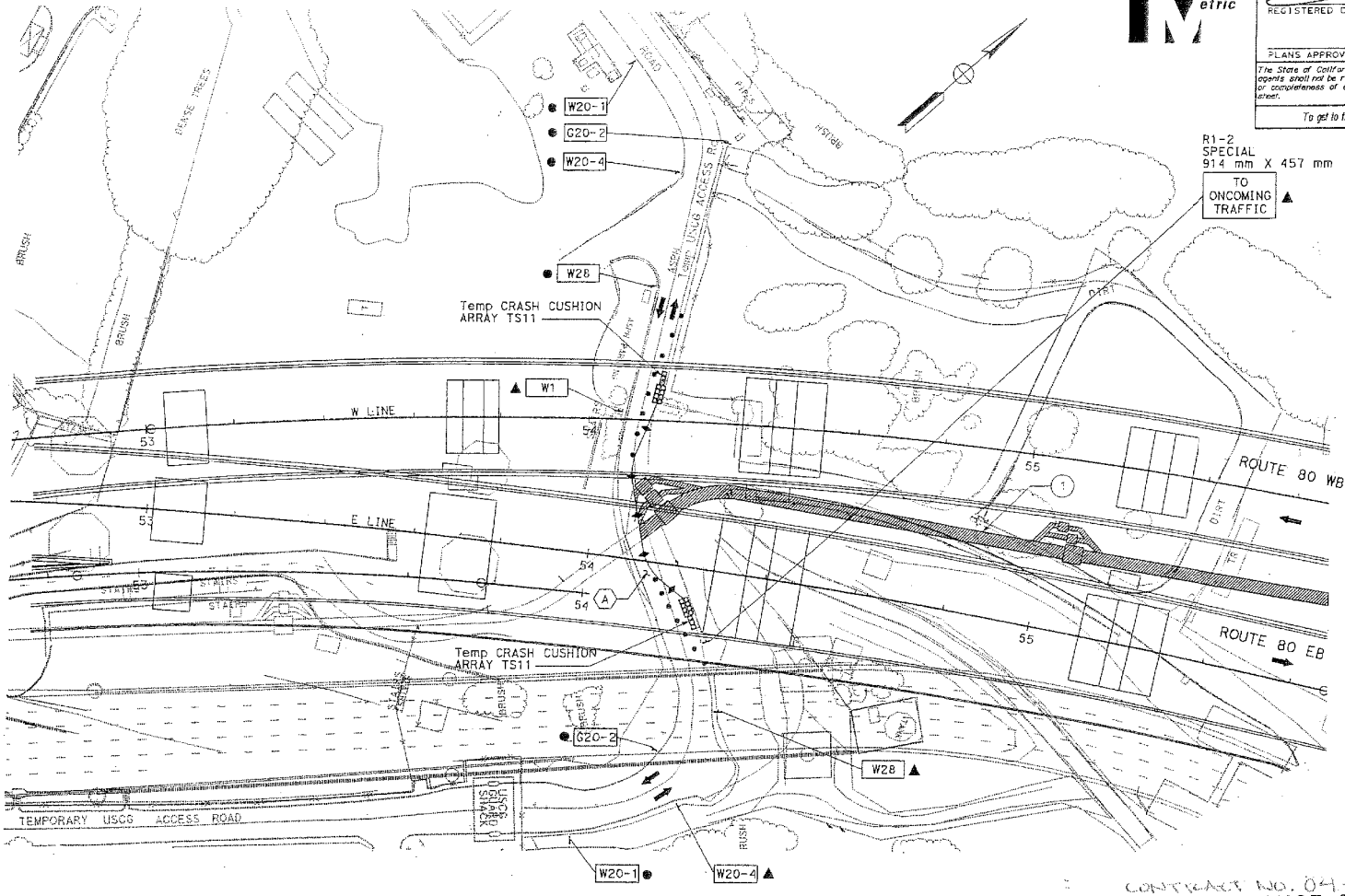

CONSTRUCTION

(1) INSTALL PORTIONS OF THE ELECTRICAL DUCT BANK.

TRAFFIC HANDLING

(A) PROVIDE A MINIMUM OF 3.6 m ONE-WAY TRAFFIC CONTROL ON Temp USCG ACCESS ROAD.

TRAFFIC HANDLING QUANTITIES

SHEET No.	CONSTRUCTION AREA SIGN		TEMPORARY CRASH CUSHION MODULE	TEMPORARY RAILING	CHANNELIZER (SURFACE MOUNTED)
	NEW	RELOCATED	TYPE TS11	(TYPE K)	
	EA			m	EA
TH-1	9		22	90	30
TH-2		4			
TOTAL	9	4	22	90	30

FOR NOTES, ABBREVIATIONS &/OR LEGEND, SEE SHEET SC-1

THIS PLAN ACCURATE FOR STAGE CONSTRUCTION WORK ONLY

CONTRACT NO. 04-0F2024

CONTRACT CHANGE ORDER NO. 73

SHEET 111 OF 158

ALL DIMENSIONS ARE IN METERS UNLESS OTHERWISE SHOWN

TRAFFIC HANDLING PLAN
USCG ROAD - PHASE 2

SCALE 1:500

TH-2

LAST REVISION: DATE PLOTTED => 04-DEC-2006
11-20-06 TIME PLOTTED => 15:32

DIST	COUNTY	ROUTE	KILOMETER POST TOTAL PROJECT	SHEET No	TOTAL SHEETS
04	SF	80	12.6/13.2	34	137

Caltrans Metric

11-27-06
REGISTERED CIVIL ENGINEER

PLANS APPROVAL DATE

REGISTERED PROFESSIONAL ENGINEER
T.T. Lai
No. 63630
Exp. 9-30-08
CIVIL
STATE OF CALIFORNIA

The State of California or its officers or agents shall not be responsible for the accuracy or completeness of electronic copies of this plan sheet.

To get to the Caltrans web site, go to: http://www.dot.ca.gov

STRUCTURE EXCAVATION (TYPE H) (DUCT BANK)

LOCATIONS	DEPTH OF EXCAVATION	TYPE H HAZARDOUS	REMARKS
	M	M3	
D 1+63.000 TO 2+00.000	0.6	150	
D 2+40.000 TO 2+65.000	0.6	50	
D 3+45.000 TO 3+80.000	1.0	330	
D 3+80.000 TO 4+50.000	0.6	220	
TOTAL		750	

ROADWAY QUANTITIES

LOCATIONS	ASPHALT CONCRETE (TYPE A)	CLASS 3 AGGREGATE BASE	REMARKS
	TONN	M3	
M2 12+95 TO 13+40	72	62	
TOTAL	72	62	

STRUCTURE EXCAVATION (DUCT BANK)

LOCATIONS	DEPTH OF EXCAVATION	STRUCTURE EXCAVATION (DUCT BANK)	REMARKS
	M	M3	
D 1+63.000 TO 2+00.000	1.9	480	
D 2+00.000 TO 2+40.000	2.5	650	
D 2+40.000 TO 2+65.000	1.9	460	
D 2+65.000 TO 3+00.000	2.5	570	
D 3+00.000 TO 3+45.000	3.0	1050	
D 3+45.000 TO 3+80.000	2.0	650	
D 3+80.000 TO 4+50.000	1.1	870	
D 4+50.000 TO 4+85.000	2.0	520	
TOTAL		5250	

STRUCTURE BACKFILL (DUCT BANK)

LOCATIONS	DEPTH OF EXCAVATION	STRUCTURE BACKFILL (DUCT BANK)	REMARKS
	M	M3	
D 1+63.000 TO 2+00.000	2.5	570	
D 2+00.000 TO 2+40.000	2.5	620	
D 2+40.000 TO 2+65.000	2.5	570	
D 2+65.000 TO 3+00.000	2.5	540	
D 3+00.000 TO 3+45.000	3.0	1010	
D 3+45.000 TO 3+80.000	3.0	930	
D 3+80.000 TO 4+50.000	2.0	1060	
D 4+50.000 TO 4+85.000	2.0	500	
TOTAL		5800	

CONTRACT NO. 04-012024
CONTRACT CHANGE ORDER NO. 73
SHEET 179 OF 280

SUMMARY OF QUANTITIES

Q-1

STATE OF CALIFORNIA - DEPARTMENT OF TRANSPORTATION
Caltrans PROJECT DEVELOPMENT

PROJECT ENGINEER: T. T. LAI
CALCULATED/DESIGNED BY
CHECKED BY
DATE REVISED BY
DATE REVISED

LAST REVISION 11-16-06
D. TIMED => 28-NOV-2006
T. PLOTTED => 23:07

DRAWING TITLE	DRAWING NO.
ELECTRICAL SHEET INDEX NO. 1	E-1
ELECTRICAL SYMBOLS, NOTES AND ABBREVIATIONS	E-2
ELECTRICAL KEY MAP	E-3
UNDERGROUND RACEWAYS DUCT BANKS AND MANHOLES	E-4 TO E-7
DETAILS UNDERGROUND RACEWAYS MANHOLE PLANS AND SECTIONS	E-8 TO E-12
DETAILS UNDERGROUND RACEWAYS TYPICAL MANHOLE AND DUCT BANK	E-13
DETAILS UNDERGROUND RACEWAYS GROUNDING INTERFACE	E-14
DETAILS UNDERGROUND RACEWAYS DUCT BANK SECTIONS	E-15 TO E-16

Caltrans Metric

DIST	COUNTY	ROUTE	KILOMETER POST TOTAL PROJECT	SHEET No	TOTAL SHEETS
04	SF	80	12.6/13.2	35	137

REGISTERED ELECTRICAL ENGINEER 11/03/06 DATE

REGISTERED PROFESSIONAL ENGINEER JENS ERLINGSSON No. E249 Exp. 9/30/06 ELECTRICAL STATE OF CALIFORNIA

PLANS APPROVAL DATE

PB POWER, Inc.
A Parsons Brinckerhoff Company
303 Second St., Suite 700N
San Francisco, CA 94107-1317

The State of California or its officers or agents shall not be responsible for the accuracy or completeness of electronic copies of this plan sheet.

Caltrans now has a web site! To get to the web site, go to http://www.dot.ca.gov

CONTRACT NO. 04-0120R4

CONTRACT CHANGE ORDER NO. 73

SHEET 179 OF 290

ELECTRICAL SHEET INDEX NO. 1

E-1

REVISED BY	DATE	CALCULATED/ DESIGNED BY	DESIGN OVERSIGHT	DATE REVISED	CHECKED BY
			BEHZAD GOLEMOHAMMADI		

STATE OF CALIFORNIA - DEPARTMENT OF TRANSPORTATION

Caltrans

LAST REVISION 00-00-00 DATE PLOTTED => 11/17/2006 TIME PLOTTED => 2:35:35 PM

FOR REDUCED PLANS ORIGINAL SCALE IS IN MILLIMETERS 0 20 40 60 80

DGN FILE => T:\13103\MS\pse\YBI - Advanced Duct Bank Work\elec\ua001.dgn
USERNAME => antonio

CU 04251 EA 0120R1

SYMBOLS

(See ES-1A and ES-1B for Additional Standard Symbols)

LAYOUT PLAN

- Conduit turned up
- Conduit turned down
- Conduit or Cable run, exposed
- Conduit run concealed in wall, concrete barrier, slab or routed underground duct bank
- Ground Bare Copper Wire, Stranded
- Cable To Cable Exothermic Type Ground Connections
- Cable Ground Connection to Equipment, Compression Type
- Cable with Pigtail Ground Connections (see plan for length)

CONDUIT RUN IDENTIFICATION

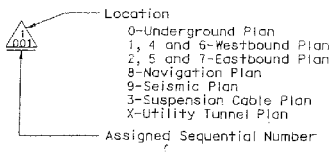

ABBREVIATIONS

SEE ES-1A AND ES-1B FOR ADDITIONAL ABBREVIATIONS

A, AMP	Ampere
AC	Alternating Current
AF	Ampere Frame Rating
AH	Ampere Hour
AT	Ampere Trip Rating
AUX	Auxiliary
BKR	Breaker
CB	Call Box
COM	Communication
CON	Control
Cont'd	Continued
CPT	Control Power Transformer
CUB	Cubicle
CU	Copper
DPDT	Double Pole Double Throw
DC	Direct Current
DISC, Disc	Disconnect
(E), Exist	Existing
FSK	Frequency shift key
G, GND, Gnd	Ground
GPS	Global Positioning System
GRS	Galvanized Rigid Steel
HID	High Intensity Discharge
HV	High Voltage
HZ, Hz	Hertz
IND, Ind	Indication
JB	Junction Box
kAIC	KiloAmperes Interrupting Capacity
Kcmil	Kilo Circular Mil
kV	Kilovolt
kW	Kilowatt
kVA	KiloVolt Ampere
LP	Lighting Panel
LTS, Lts	Lights
LVCC	Low Voltage Control Center
MH	Mounting Height or Manhole
MVA	Mega Volt Ampere
NAP	Navigation Lighting Relay Cabinet
PH	Phase
PTSS	Power Transfer Selector Sw.
PWR	Power
RGS	Rigid Galvanized Steel
RMS	Root Mean Square
PLC	Programmable Logic Controller
RTU	Remote Terminal Unit
SCADA, Scada	Supervisory Control And Data Acquisition
SFOBB	San Francisco Oakland Bay Bridge
SG	System Ground
Shld, SHLD	Shield
SMD	Strong Motion Detection
SSC	Seismic Sensor Cable
SWGR, Swgr	Switchgear
SW	Switch
TEL	Telephone
TB	Terminal Box
Term	Terminal
TSH	Temperature Switch, Thermostat
TOC	Top of Concrete
TOS	Traffic Operations System
Tr	Triad
UNO, UON	Unless Otherwise Noted
UP	Utility Panel
UV	Undervoltage
V	Volt
VAC	Volts Alternating Current
VCB	Vacuum Circuit Breaker
VDC	Volts Direct Current
VM	Voltmeter
VS	Voltmeter Switch
W	Wire
WP	Weatherproof
YBI	Yerba Buena Island

GENERAL NOTES

1. All electrical work shall conform to the State of California Department of Transportation 1999 Standard Specifications and 2004 Standard Plans. These general notes and the special provisions under these contract also applies. For any conflict or provisions, State Guidlines applies.
2. Conduit routing is diagrammatic. Manhole locations shall be located as shown on plan drawings. Exact locations of Duct Banks and Manholes may be adjusted depending on field conditions and approval by the Resident Engineer.
3. All conduits in duct banks shall be RGS conduits size 103 mm.
4. Conduit fittings for 103 mm conduits shall have a 915 mm minimum bending radius.
5. All conduits, including spares, shall be provided with pull wires.
6. All conduits shall be provided with nameplate tags in manholes per drawings.
7. All duct banks shall be provided with ground wire as indicated on plan drawings.
8. All E sheets are accurate for electrical work only.
9. All dimensions are in millimeters unless otherwise shown.

CONTRACT NO. 04-0120R4
CONTRACT CHANGE ORDER NO. 73
SHEET 180 OF 250

ELECTRICAL SYMBOLS, NOTES AND ABBREVIATIONS

NO SCALE

E-2

DIST	COUNTY	ROUTE	KILOMETER POST TOTAL PROJECT	SHEET No.	TOTAL SHEETS
04	SF	80	12.6/13.2	36	137

11/03/06
REGISTERED ELECTRICAL ENGINEER DATE

REGISTERED PROFESSIONAL ENGINEER
DENS ERLINGSSON
No. 8249
EXP. 3/30/08
ELECTRICAL
STATE OF CALIFORNIA

PLANS APPROVAL DATE

PB POWER, Inc.
A Parsons Brinckerhoff Company
303 Second St., Suite 700N
San Francisco, CA 94107-1317

The State of California or its officers or agents shall not be responsible for the accuracy or completeness of electronic copies of this plan sheet.

Caltrans now has a web site! To get to the web site, go to http://www.dot.ca.gov

DESIGN OVERSIGHT - BEHZAD GOLEMOHAMMADI
CALCULATED/DESIGNED BY
CHECKED BY
DATE REVISED BY
DATE REVISED
STATE OF CALIFORNIA - DEPARTMENT OF TRANSPORTATION
Caltrans

LAST REVISION 00-00-00
DATE PLOTTED => 11/17/2006
TIME PLOTTED => 21:35:25 PM

FOR REDUCED PLANS ORIGINAL SCALE IS IN MILLIMETERS 0 20 40 60 80
DGN FILE => t:\13103\ms\pse\ydi - advanced duct bank work\elec\ua002.dgn
USERNAME => antonio
CU 04251
EA 0120R1

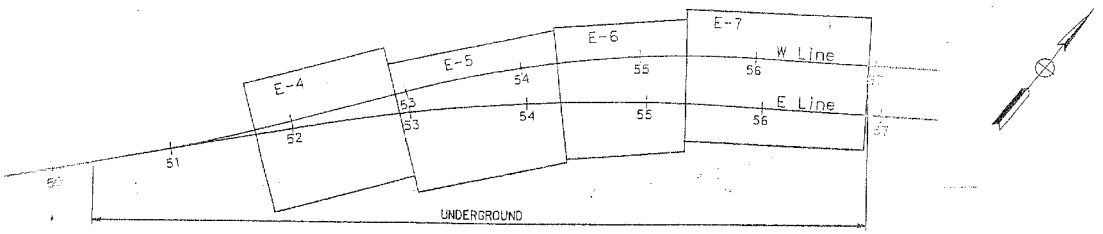

DIST	COUNTY	ROUTE	KILOMETER POST TOTAL PROJECT	SHEET No	TOTAL SHEETS
04	SF	80	12.6/13.2	37	137

Caltrans Metric

11/03/06
REGISTERED ELECTRICAL ENGINEER DATE

PLANS APPROVAL DATE

PB POWER, Inc.
A Parsons Brinckerhoff Company
303 Second St., Suite 700N
San Francisco, CA 94107-1317

REGISTERED PROFESSIONAL ENGINEER
JENS ERLINGSSON
No. 8249
Exp. 9/30/08
ELECTRICAL
STATE OF CALIFORNIA

The State of California or its officers or agents shall not be responsible for the accuracy or completeness of electronic copies of this plan sheet.

Caltrans now has a web site! To get to the web site, go to http://www.dot.ca.gov

STATE OF CALIFORNIA - DEPARTMENT OF TRANSPORTATION

Caltrans

DESIGN OVERSIGHT
BEHZAD GOLEMOHAMMADI

CALCULATED/DESIGNED BY
CHECKED BY

DATE
REVISED BY
DATE REVISED

CONTRACT NO. 04-0120RA
CONTRACT CHANGE ORDER NO. 73
SHEET 181 **OF** 280

ELECTRICAL KEY MAP

NO SCALE

E-3

LAST REVISION 00-00-00
DATE PLOTTED => 11/17/2006
TIME PLOTTED => 2:35:35 PM

FOR REDUCED PLANS ORIGINAL SCALE IS IN MILLIMETERS 0 20 40 60 80

DGN FILE => t:\13103\ms\pse\ybi - advanced duct bank work\elec\ua003.dgn
USERNAME => antonio

CU 04251

EA 0120R1

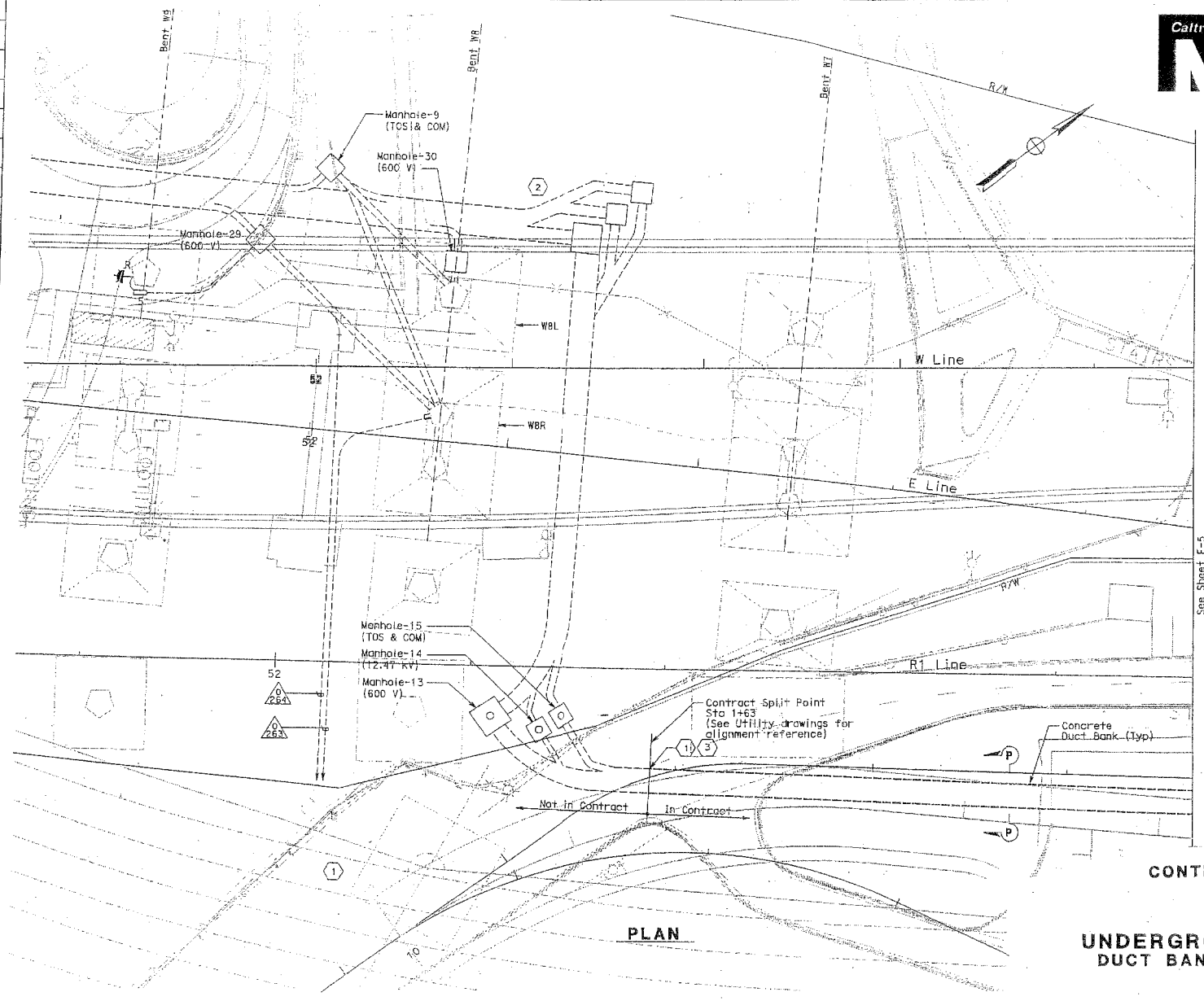

DIST	COUNTY	ROUTE	KILOMETER POST TOTAL PROJECT	SHEET NO.	TOTAL SHEETS
04	SF	80	12.6/13.2	38	137

REGISTERED ELECTRICAL ENGINEER — DATE 11/03/08

JENS ERLINGSSON — No. 8249 — Exp. 9/30/08 — ELECTRICAL — REGISTERED PROFESSIONAL ENGINEER — STATE OF CALIFORNIA

PLANS APPROVAL DATE

PB POWER, Inc.
A Parsons Brinckerhoff Company
303 Second St., Suite 700N
San Francisco, CA 94107-1317

The State of California or its officers or agents shall not be responsible for its accuracy or completeness of electronic copies of this plan sheet.

Caltrans now has a web site! To get to its web site, go to http://www.dot.ca.gov

NOTES:

1. References:
   - For typical manhole and duct bank details, see sheet E-13.
   - For duct bank sections, see sheet E-15
   - For duct bank anchors on slopes, see Utility Sheets.
2. For other related work, not shown on this sheet, see Electrical Special Provisions.
3. For location of manholes see Utility Sheets.

SHEET NOTES:

(1) Stub-out conduit for 153 mm future extension. Cap all conduits.

(2) Duct banks shall be sweeped.

(3) Leave wooden formwork in place at terminal point of duct bank to prevent soil from migrating inside. Stub-out conduits 153 mm through drill holes in wooden formwork to accomodate future extension of duct bank. Cap all conduits.

CONTRACT NO. 04-0120R1

CONTRACT CHANGE ORDER NO. 75

SHEET 182 OF 220

UNDERGROUND RACEWAYS
DUCT BANKS AND MANHOLES

SCALE: 1:200

E-4

STATE OF CALIFORNIA - DEPARTMENT OF TRANSPORTATION — Caltrans

DESIGN OVERSIGHT — BEHZAD GOLEMOHAMMADI

CALCULATED/ DESIGNED BY

CHECKED BY

DATE | REVISED BY | DATE REVISED

THIS PLAN ACCURATE FOR ELECTRICAL WORK ONLY.

ALL DIMENSIONS ARE IN MILLIMETERS UNLESS OTHERWISE SHOWN

FOR REDUCED PLANS ORIGINAL SCALE IS IN MILLIMETERS 0 20 40 60 80

DGN FILE =>#REQUEST
USERNAME =>#USER

LAST REVISION 00-00-00 — DATE PLOTTED =>#DATE — TIME PLOTTED =>#TIME

CU 04251 | EA 0120R1

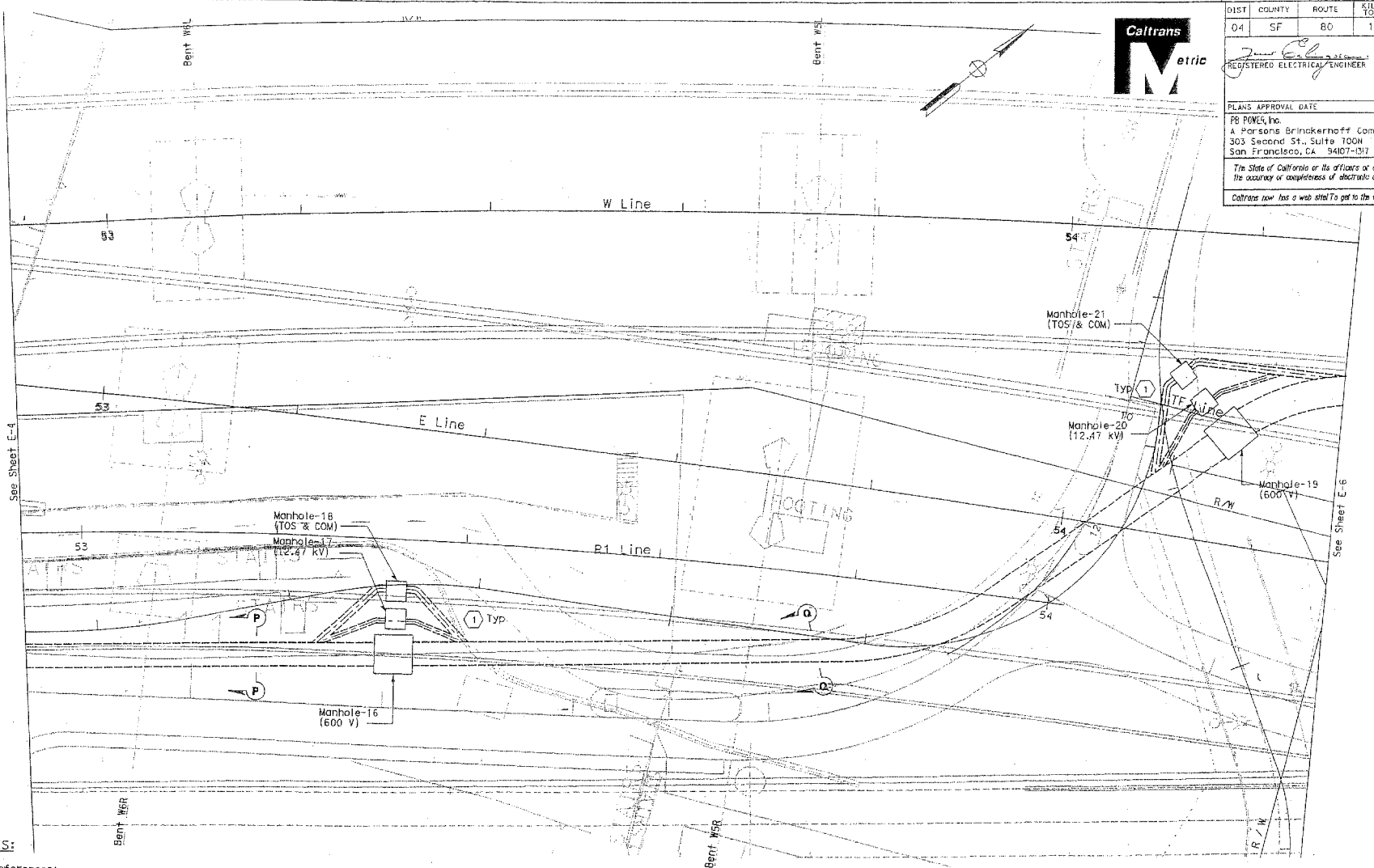

PLAN

NOTES:

1. References:
   - For manhole plans and sections, see sheets E-8 through E-11.
   - For typical manhole and duct bank details, see sheet E-13.
   - For duct bank sections, see sheet E-15.
2. For other related work, not shown on this sheet, see Electrical Special Provisions.
3. For location of manholes, see Utility Sheets.

SHEET NOTES:

(1) Duct banks shall be sweeped.

Contract No. 04-0120R1

CONTRACT CHANGE ORDER NO. 13

SHEET 182 OF 224

UNDERGROUND RACEWAYS
DUCT BANKS AND MANHOLES

SCALE: 1:200

E-5

DIST	COUNTY	ROUTE	KILOMETER POST TOTAL PROJECT	SHEET NO.	TOTAL SHEETS
04	SF	80	12.6/13.2	39	137

REGISTERED ELECTRICAL ENGINEER — 11/03/06 DATE

JENS ERLINGSSON No. 2245 Exp. 9/30/08 ELECTRICAL — REGISTERED PROFESSIONAL ENGINEER — STATE OF CALIFORNIA

PLANS APPROVAL DATE

PB POWER, Inc.
A Parsons Brinckerhoff Company
303 Second St., Suite 700N
San Francisco, CA 94107-1317

The State of California or its officers or agents shall not be responsible for the accuracy or completeness of electronic copies of this plan sheet.

Caltrans now has a web site! To get to the web site, go to http://www.dot.ca.gov

STATE OF CALIFORNIA - DEPARTMENT OF TRANSPORTATION — Caltrans

DESIGN OVERSIGHT — BEHZAD GOLEMHAMMADI

CALCULATED/ DESIGNED BY — CHECKED BY

DATE REVISED BY — DATE REVISED

LAST REVISION 00-00-00 — DATE PLOTTED => &DATE — TIME PLOTTED => &TIME

THIS PLAN ACCURATE FOR ELECTRICAL WORK ONLY.

ALL DIMENSIONS ARE IN MILLIMETERS UNLESS OTHERWISE SHOWN

FOR REDUCED PLANS ORIGINAL SCALE IS IN MILLIMETERS — 0 20 40 60 80

DGN FILE => &REQUEST
USERNAME => &USER

CU 04251 — EA 0120R1

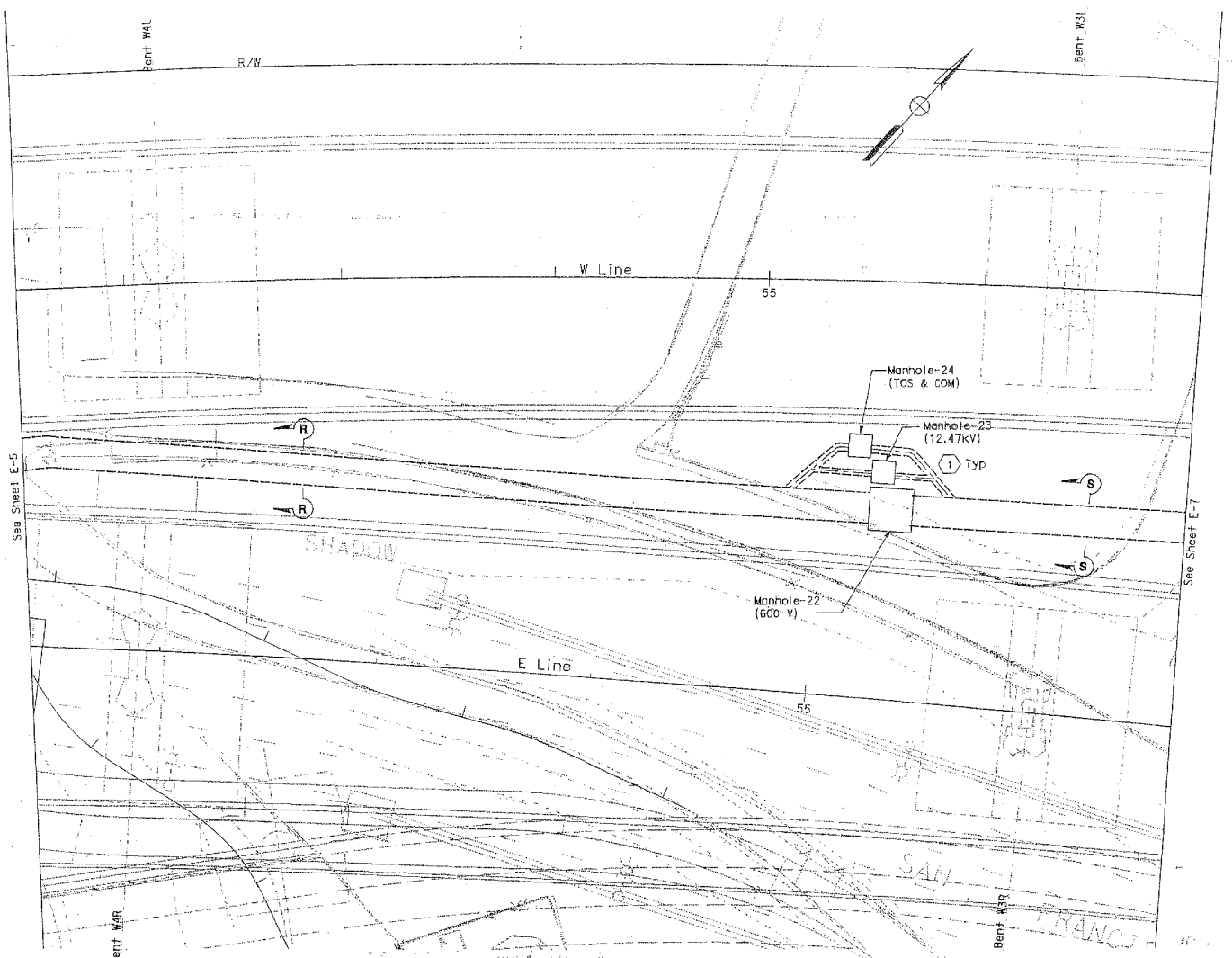

DIST	COUNTY	ROUTE	KILOMETER POST TOTAL PROJECT	SHEET NO.	TOTAL SHEETS
04	SF	80	12.6/13.2	40	137

REGISTERED ELECTRICAL ENGINEER — DATE 11/03/06

REGISTERED PROFESSIONAL ENGINEER — HANS ERLINGSSON — NO. E249 — EXP. 9/30/08 — ELECTRICAL — STATE OF CALIFORNIA

PLANS APPROVAL DATE

PB POWER, Inc.
A Parsons Brinckerhoff Company
303 Second St., Suite 700N
San Francisco, CA 94107-1317

The State of California or its officers or agents shall not be responsible for the accuracy or completeness of electronic copies of this plan sheet.

Caltrans now has a web site! To get to the web site, go to http://www.dot.ca.gov

NOTES:

1.. References:
- For manhole plans and sections, see sheets E-11 and E-12.
- For typical manhole and duct bank details, see sheet E-13.
- For duct bank sections, see sheet E-16.

2. For other related work, not shown on this sheet, see Electrical Special Provisions.

3. For location of manholes, see Utility Sheets.

SHEET NOTES:

1 Duct banks shall be sweeped.

CONTRACT NO. 04-0Y220U4

CONTRACT CHANGE ORDER NO. 73

SHEET 122 OF 250

UNDERGROUND RACEWAYS
DUCT BANKS AND MANHOLES

SCALE: 1:200

E-6

STATE OF CALIFORNIA - DEPARTMENT OF TRANSPORTATION — Caltrans

DESIGN OVERSIGHT: BEHZAD GOLEMOHAMMADI

CALCULATED/DESIGNED BY

CHECKED BY

DATE REVISED BY

DATE REVISED

LAST REVISION 00-00-00

PLOTTED => $DATE
PLOTTED => $TIME

THIS PLAN ACCURATE FOR ELECTRICAL WORK ONLY.

ALL DIMENSIONS ARE IN MILLIMETERS UNLESS OTHERWISE SHOWN

FOR REDUCED PLANS ORIGINAL SCALE IS IN MILLIMETERS — 0 20 40 60 80

DGN FILE => $REQUEST
USERNAME => $USER

CU 04251

EA 0120R1

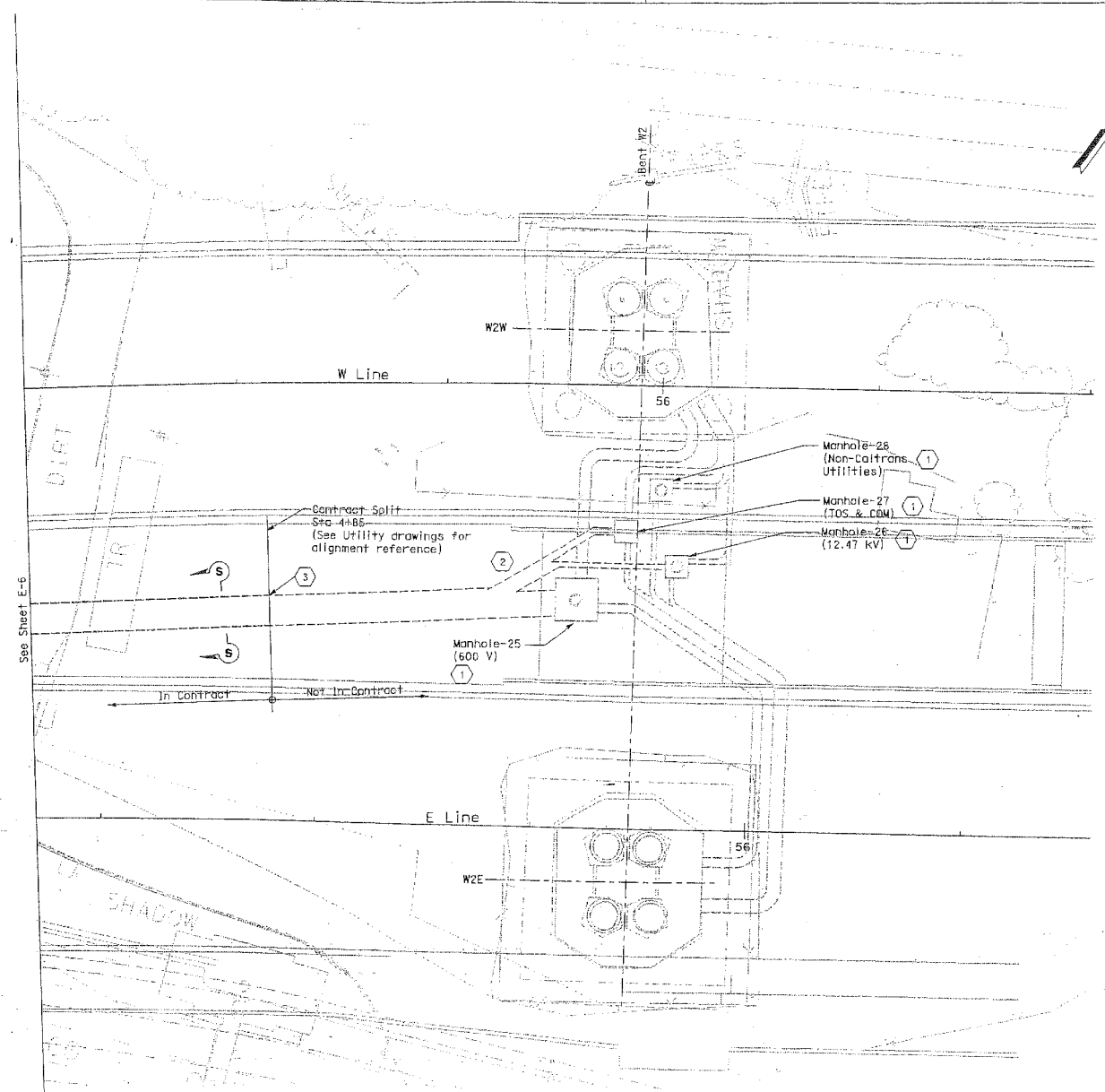

DIST	COUNTY	ROUTE	KILOMETER POST TOTAL PROJECT	SHEET NO.	TOTAL SHEETS
04	SF	80	12.6/13.2	41	137

REGISTERED ELECTRICAL ENGINEER — 11/03/06 DATE

JENS ERLINGSSON No. 8249 Exp. 9/30/08 ELECTRICAL — REGISTERED PROFESSIONAL ENGINEER — STATE OF CALIFORNIA

PLANS APPROVAL DATE

PB POWER, Inc.
A Parsons Brinckerhoff Company
303 Second St., Suite 700N
San Francisco, CA 94107-1317

The State of California or its officers or agents shall not be responsible for its accuracy or completeness of electronic copies of this plan sheet.

Caltrans now has a web site! To get to the web site, go to http://www.dot.ca.gov

NOTES:

1. References:
   - For typical manhole and duct bank details, see sheet E-13.
   - For duct bank sections, see sheet E-16.
2. For other related work, not shown on this sheet, see Electrical Special Provisions.
3. For location of manholes, see Utility Sheets.

NOTES:

(1) Not in contract.

(2) Duct banks shall be sweeped.

(3) Leave wooden formwork in place at terminal point of duct bank to prevent soil from migrating inside. Stub-out conduits 153 mm through drill holes in wooden formwork to accomodate future extension of duct bank. Cap all conduits.

CONTRACT NO. 04-0120R1

CONTRACT CHANGE ORDER NO. 73

SHEET 102 OF 230

UNDERGROUND RACEWAYS
DUCT BANKS AND MANHOLES

SCALE: 1:200

E-7

STATE OF CALIFORNIA - DEPARTMENT OF TRANSPORTATION — Caltrans

DESIGN OVERSIGHT: BEHZAD GOLEMOHAMMADI

CALCULATED/DESIGNED BY | CHECKED BY

DATE | REVISED BY | DATE REVISED

LAST REVISION: 00-00-00 — DATE PLOTTED => $DATE — TIME PLOTTED => $TIME

THIS PLAN ACCURATE FOR ELECTRICAL WORK ONLY.

ALL DIMENSIONS ARE IN MILLIMETERS UNLESS OTHERWISE SHOWN

FOR REDUCED PLANS ORIGINAL SCALE IS IN MILLIMETERS — 0 20 40 60 80

DGN FILE => &REQUEST
USERNAME => &USER

CU 04251 | EA 0120R1

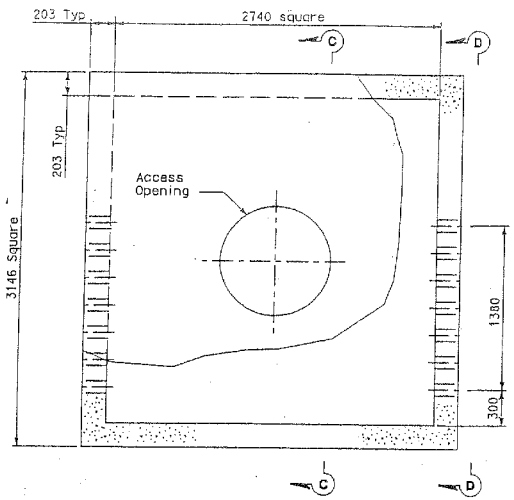

PLAN-MANHOLE-16

SCALE: 1:20 (600 W)

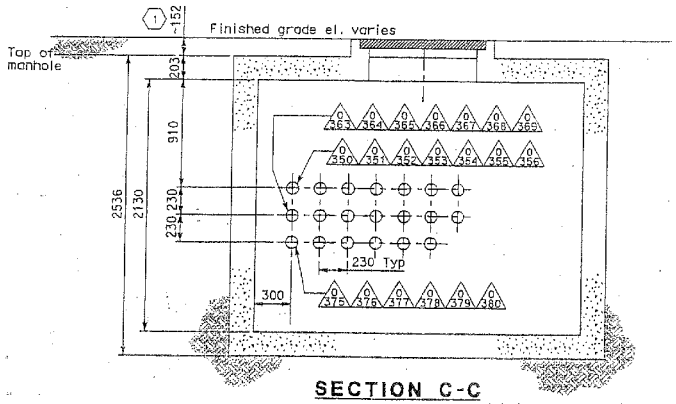

SECTION C-C

SCALE: 1:20

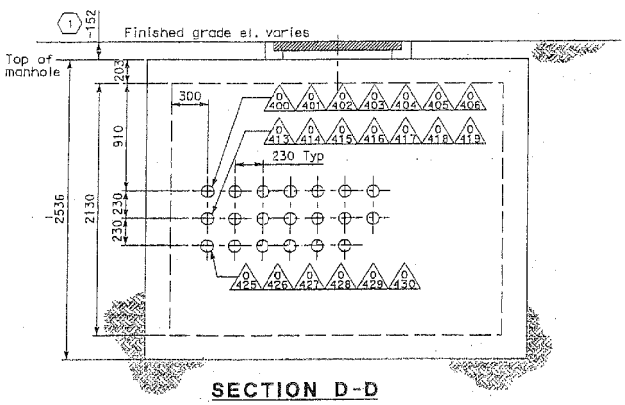

SECTION D-D

SCALE: 1:20

Caltrans Metric

DIST	COUNTY	ROUTE	KILOMETER POST TOTAL PROJECT	SHEET NO.	TOTAL SHEETS
04	SF	80	12.6/13.2	42	137

REGISTERED ELECTRICAL ENGINEER — 11/03/06 DATE

JENS ERLINGSSON No. 8245 Exp. 3/30/08 ELECTRICAL — REGISTERED PROFESSIONAL ENGINEER — STATE OF CALIFORNIA

PLANS APPROVAL DATE

PB POWER, Inc.
A Parsons Brinckerhoff Company
303 Second St., Suite 700N
San Francisco, CA 94107-(317

The State of California or its officers or agents shall not be responsible for the accuracy or completeness of electronic copies of this plan sheet.

Caltrans now has a web site! To get to the web site, go to http://www.dot.ca.gov

NOTES:

1. References:
   - For duct bank and manhole plans, see sheet E-5.
   - For duct bank sections, see sheet E-15.
   - For typical manhole and duct bank details, see sheet E-13.
2. For other related work, not shown on this sheet, see Electrical Special Provisions.

SHEET NOTES:

(1) Approximate distance of manhole necking or riser is from the finished grade and top of manhole. Maximum length of manhole necking or riser shall be 914 mm.

CONTRACT NO. 04-0K2004
CONTRACT CHANGE ORDER NO. 13
SHEET 102 OF 250

DETAILS
UNDERGROUND RACEWAYS
MANHOLE PLANS AND SECTIONS

SCALE AS NOTED

STATE OF CALIFORNIA - DEPARTMENT OF TRANSPORTATION
Caltrans
DESIGN OVERSIGHT
BEHZAD GOLEMOHAMMADI
CALCULATED/DESIGNED BY
CHECKED BY
DATE REVISED BY
DATE REVISED

ALL DIMENSIONS ARE IN MILLIMETERS UNLESS OTHERWISE SHOWN

0 20 40 60 80

IDGN FILE => T:\13103\ms\pse\ybi - advanced duct bank work\elec\ep808.dgn

DATE PLOTTED => 11/17/2006
TIME PLOTTED => 2:35:39 PM
LAST REVISION 00-00-00

E-8

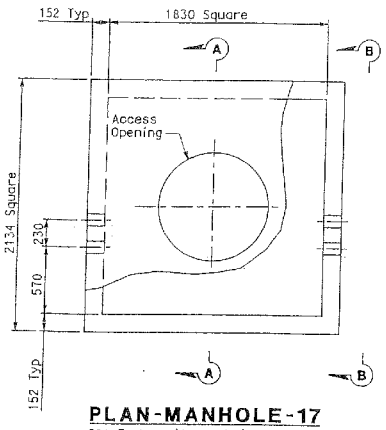

PLAN-MANHOLE-17
SCALE: 1:20 (12.47 kV)

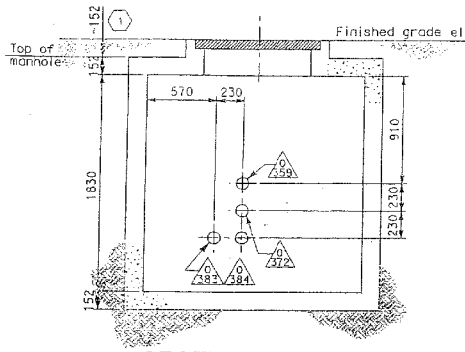

SECTION A-A
SCALE: 1:20

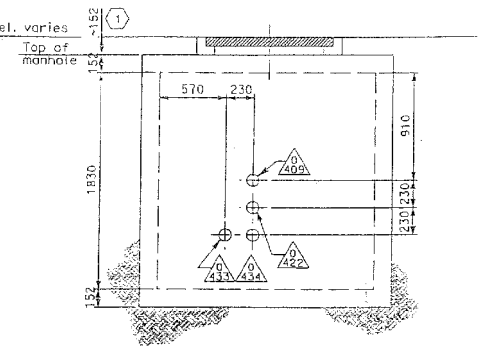

SECTION B-B
SCALE: 1:20

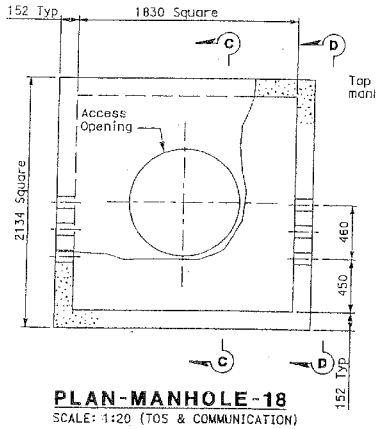

PLAN-MANHOLE-18
SCALE: 1:20 (TOS & COMMUNICATION)

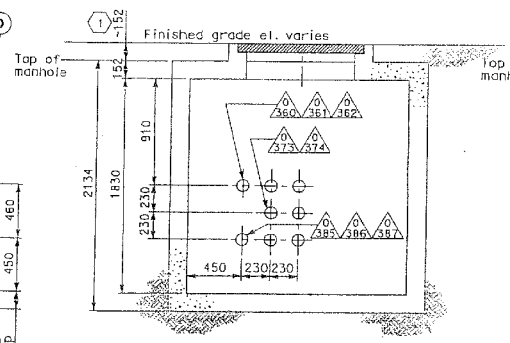

SECTION C-C
SCALE: 1:20

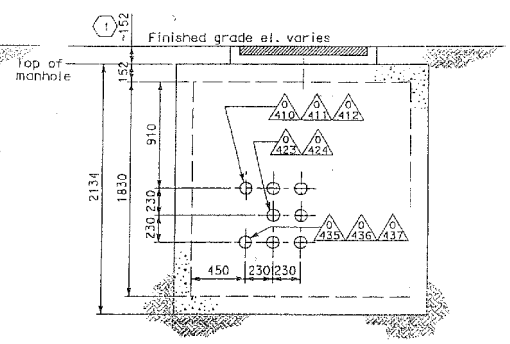

SECTION D-D
SCALE: 1:20

DIST	COUNTY	ROUTE	KILOMETER POST TOTAL PROJECT	SHEET No	TOTAL SHEETS
04	SF	80	12.6/13.2	43	137

REGISTERED ELECTRICAL ENGINEER 11/03/06 DATE

PLANS APPROVAL DATE

PB POWER, Inc.
A Parsons Brinckerhoff Company
303 Second St., Suite 700N
San Francisco, CA 94107-1317

REGISTERED PROFESSIONAL ENGINEER JENS ERLINGSSON No. 6249 Exp. 5/30/08 ELECTRICAL STATE OF CALIFORNIA

The State of California or its officers or agents shall not be responsible for the accuracy or completeness of electronic copies of this plan sheet.

Caltrans now has a web site! To get to the web site, go to http://www.dot.ca.gov

NOTES:

1. References:
   - For duct bank and manhole plan, see sheet E-5.
   - For duct bank sections, see sheet E-15.
   - For typical manhole and duct bank details, see sheet E-13.
2. For other related work, not shown on this sheet, see Electrical Special Provisions.

SHEET NOTES:

(1) Approximate distance of manhole necking or riser is from the finished grade and top of manhole. Maximum length of manhole necking or riser shall be 914 mm.

CONTRACT NO. 04-0120R4
CONTRACT CHANGE ORDER NO. 73
SHEET 187 **OF** 280

DETAILS
UNDERGROUND RACEWAYS
MANHOLE PLANS AND SECTIONS
SCALE AS NOTED

E-9

ALL DIMENSIONS ARE IN MILLIMETERS UNLESS OTHERWISE SHOWN

FOR REDUCED PLANS ORIGINAL SCALE IS IN MILLIMETERS 0 20 40 60 80

DGN FILE => f:\13103\ms\pse\ybl - advanced duct bank work\elec\uo009.dgn
USERNAME => antonio
CU 04251
EA 0120R1

DATE PLOTTED => 11/17/2006
TIME PLOTTED => 2:35:39 PM
LAST REVISION 00-00-00

DESIGN ASSIGNT BEHZAD GOLEMOHAMMADI
CALCULATED/DESIGNED BY
CHECKED BY
DATE
REVISED BY
DATE REVISED

STATE OF CALIFORNIA - DEPARTMENT OF TRANSPORTATION
Caltrans

DIST	COUNTY	ROUTE	KILOMETER POST TOTAL PROJECT	SHEET No.	TOTAL SHEETS
04	SF	80	12.6/13.2	44	137

Caltrans Metric

REGISTERED ELECTRICAL ENGINEER 11/03/06 DATE

PLANS APPROVAL DATE

PB POWER, Inc.
A Parsons Brinckerhoff Company
303 Second St., Suite 700N
San Francisco, CA 94107-1317

REGISTERED PROFESSIONAL ENGINEER JENS ERLINGSSON No. 8249 Exp. 5/30/08 ELECTRICAL STATE OF CALIFORNIA

The State of California or its officers or agents shall not be responsible for the accuracy or completeness of electronic copies of this plan sheet.

Caltrans now has a web site! To get to the web site, go to http://www.dot.ca.gov

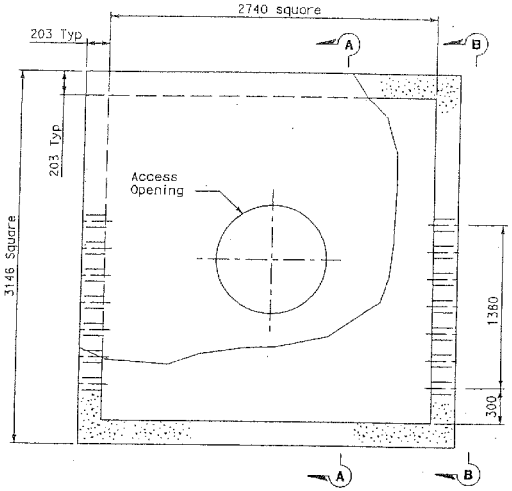

PLAN-MANHOLE-19
SCALE: 1:20 (600 V)

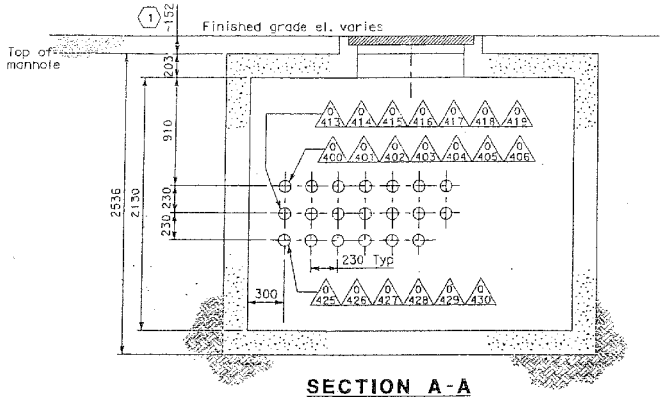

SECTION A-A
SCALE: 1:20

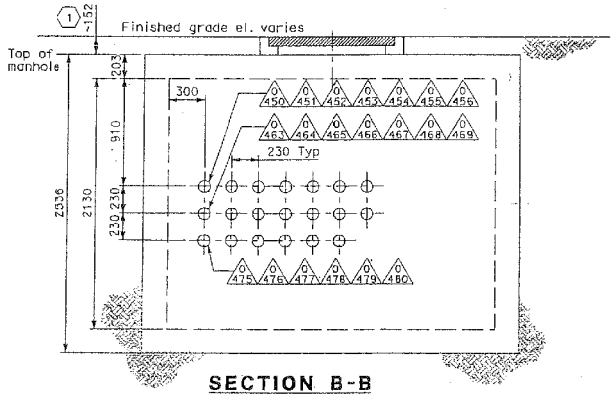

SECTION B-B
SCALE: 1:20

NOTES:

1. References:
   - For duct bank and manhole plan, see sheet E-5.
   - For duct bank sections, see sheets E-15 and E-16.
   - For typical manhole and duct bank details, see sheet E-13.
2. For other related work, not shown on this sheet, see Electrical Special Provisions.

SHEET NOTES:

(1) Approximate distance of manhole necking or riser is from the finished grade and top of manhole. Maximum length of manhole necking or riser shall be 914 mm.

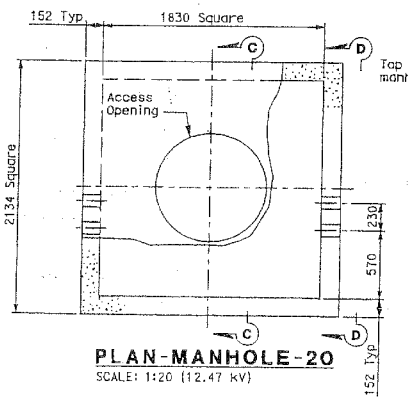

PLAN-MANHOLE-20
SCALE: 1:20 (12.47 kV)

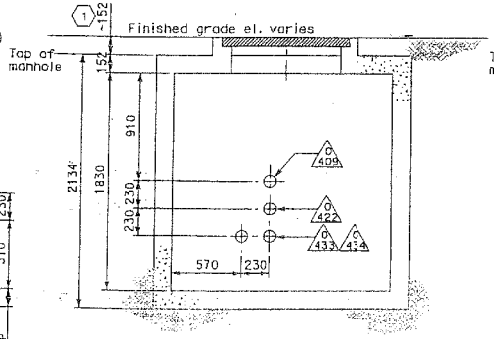

SECTION C-C
SCALE: 1:20

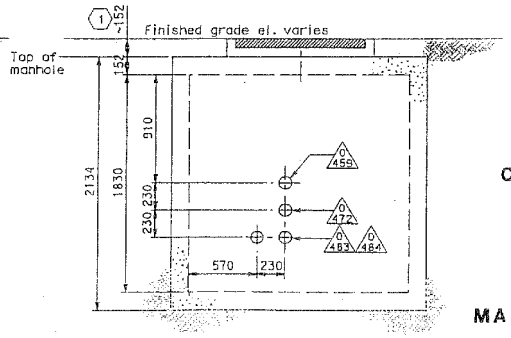

SECTION D-D
SCALE: 1:20

ALL DIMENSIONS ARE IN MILLIMETERS UNLESS OTHERWISE SHOWN

CONTRACT NO. 04-0120R4
CONTRACT CHANGE ORDER NO. 173
SHEET 184 OF 280

DETAILS
UNDERGROUND RACEWAYS
MANHOLE PLANS AND SECTIONS
SCALE AS NOTED

E-10

STATE OF CALIFORNIA - DEPARTMENT OF TRANSPORTATION
Caltrans

DESIGN OVERSIGHT: BEHZAD GOLEMOHAMMADI
CALCULATED/DESIGNED BY | CHECKED BY | DATE | REVISED BY | DATE REVISED

FOR REDUCED PLANS ORIGINAL SCALE IS IN MILLIMETERS 0 20 40 60 80

DGN FILE => t:\13103\ms\pse\ybi - advanced duct bank work\elec\ua010.dgn
USERNAME => antonio

CU 04251 | EA 0120R1

LAST REVISION 00-00-00 | DATE PLOTTED => 11/17/2006 | TIME PLOTTED => 2:35:40 PM

DIST	COUNTY	ROUTE	KILOMETER POST TOTAL PROJECT	SHEET No.	TOTAL SHEETS
04	SF	80	12.6/13.2	45	137

REGISTERED ELECTRICAL ENGINEER 11/03/06 DATE

PLANS APPROVAL DATE

PB POWER, Inc.
A Parsons Brinckerhoff Company
303 Second St., Suite 700N
San Francisco, CA 94107-1317

REGISTERED PROFESSIONAL ENGINEER JENS ERLINGSSON No. 5249 Exp. 9/30/08 ELECTRICAL STATE OF CALIFORNIA

The State of California or its officers or agents shall not be responsible for the accuracy or completeness of electronic copies of this plan sheet.

Caltrans now has a web site! To get to the web site, go to http://www.dot.ca.gov

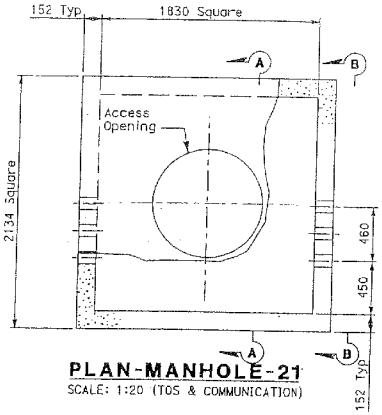

PLAN-MANHOLE-21
SCALE: 1:20 (TOS & COMMUNICATION)

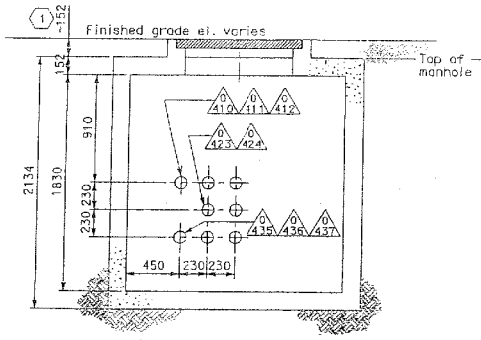

SECTION A-A
SCALE: 1:20

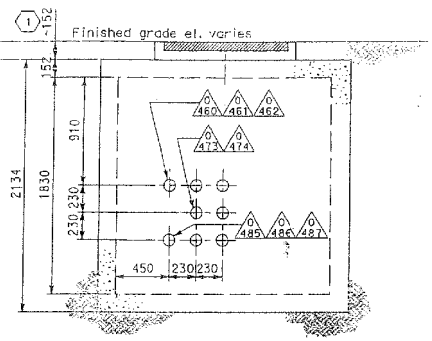

SECTION B-B
SCALE: 1:20

NOTES:

1. References:
   - For duct bank and manhole plans, see sheets E-5 and E-6.
   - For duct bank sections, see sheet E-16.
   - For typical manhole and duct bank details, see sheet E-13.
2. For other related work, not shown on this sheet, see Electrical Special Provisions.

SHEET NOTES:

(1) Approximate distance of manhole necking or riser is from the finished grade and top of manhole. Maximum length of manhole necking or riser shall be 914 mm.

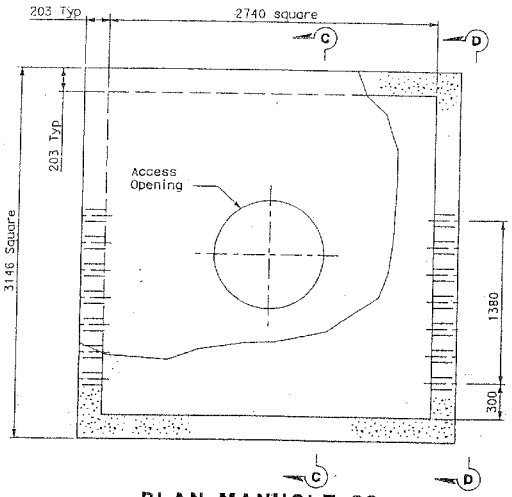

PLAN-MANHOLE-22
SCALE: 1:20 (600 V)

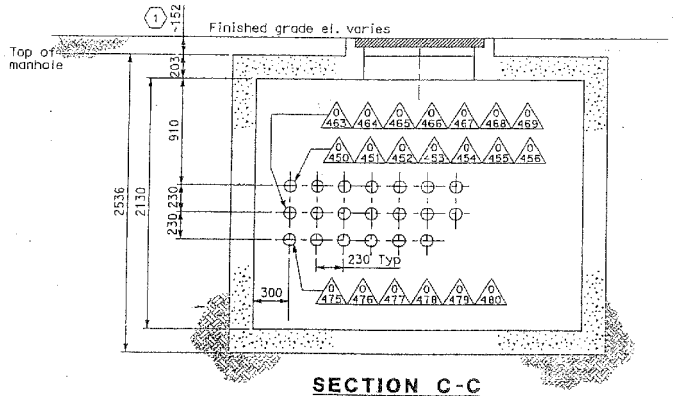

SECTION C-C
SCALE: 1:20

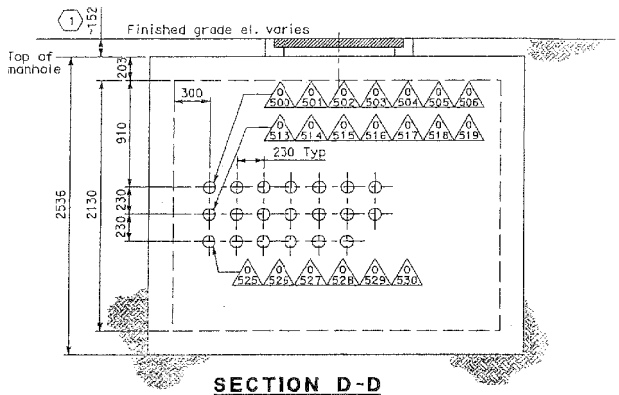

SECTION D-D
SCALE: 1:20

CONTRACT NO. 04-0120R4
CONTRACT CHANGE ORDER NO. 73

SHEET 122 OF 280

DETAILS
UNDERGROUND RACEWAYS
MANHOLE PLANS AND SECTIONS
SCALE AS NOTED

E-11

ALL DIMENSIONS ARE IN MILLIMETERS UNLESS OTHERWISE SHOWN

FOR REDUCED PLANS ORIGINAL SCALE IS IN MILLIMETERS 0 20 40 60 80

DGN FILE => t:\13103\ms\pse\ybi - advanced duct bank work\elec\ua0l1.dgn
USERNAME => antonio

CU 04251 EA 0120R1

LAST REVISION 00-00-00 DATE PLOTTED => 11/17/2006 TIME PLOTTED => 2:35:40 PM

STATE OF CALIFORNIA - DEPARTMENT OF TRANSPORTATION
Caltrans

DESIGN ENGINEER BEHZAD GOLEMOHAMMADI
CALCULATED/DESIGNED BY
CHECKED BY
DATE
REVISED BY
DATE REVISED

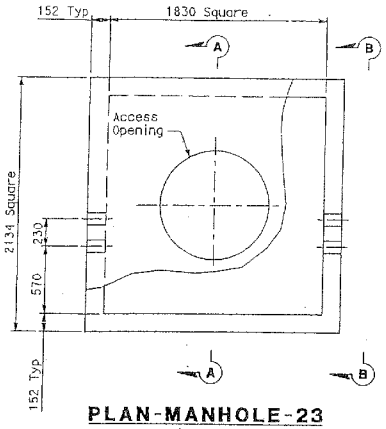

PLAN-MANHOLE-23
SCALE: 1:20 (12.47 kV)

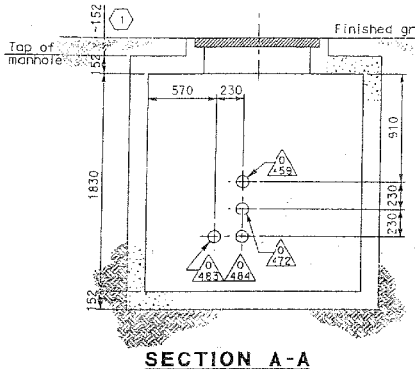

SECTION A-A
SCALE: 1:20

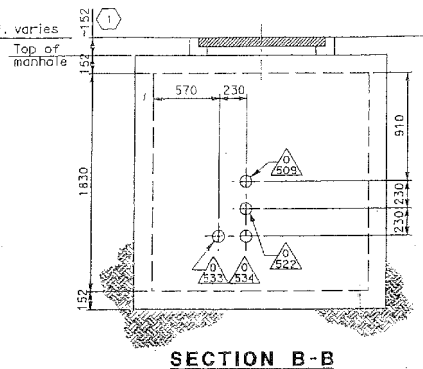

SECTION B-B
SCALE: 1:20

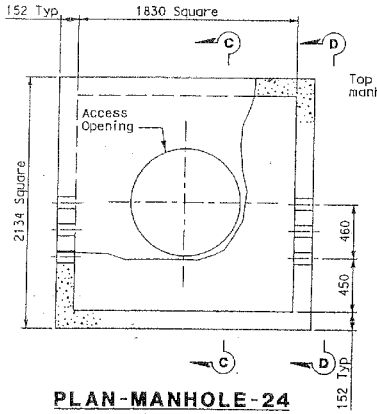

PLAN-MANHOLE-24
SCALE: 1:20 (TOS & COMMUNICATION)

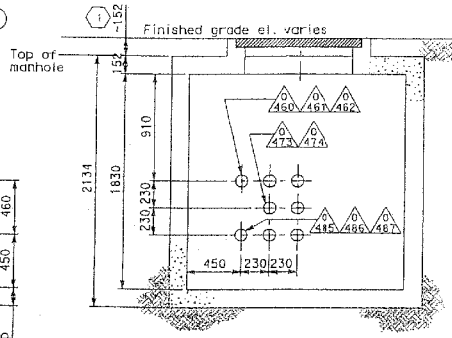

SECTION C-C
SCALE: 1:20

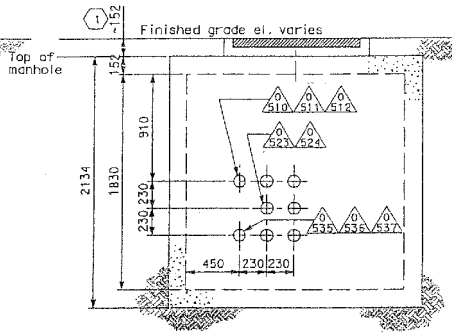

SECTION D-D
SCALE: 1:20

Caltrans Metric

DIST	COUNTY	ROUTE	KILOMETER POST TOTAL PROJECT	SHEET NO.	TOTAL SHEETS
04	SF	80	12.6/13.2	46	137

REGISTERED ELECTRICAL ENGINEER — 11/03/06 DATE

JENS ERLINGSSON No. 8245 Exp. 9/30/08 ELECTRICAL — REGISTERED PROFESSIONAL ENGINEER — STATE OF CALIFORNIA

PLANS APPROVAL DATE

PB POWER, Inc.
A Parsons Brinckerhoff Company
303 Second St., Suite 700N
San Francisco, CA 94107-1317

The State of California or its officers or agents shall not be responsible for the accuracy or completeness of electronic copies of this plan sheet.

Caltrans now has a web site! To get to the web site, go to http://www.dot.ca.gov

NOTES:

1. References:
   - For duct banks and manholes, see sheet E-6.
   - For duct bank sections, see sheet E-16.
   - For typical manhole and duct bank details, see sheet E-13.
2. For other related work, not shown on this sheet, see Electrical Special Provisions.

SHEET NOTES:

(1) Approximate distance of manhole necking or riser is from the finished grade and top of manhole. Maximum length of manhole necking or riser shall be 914 mm.

CONTRACT NO. 04-012004
CONTRACT CHANGE ORDER NO. 173
SHEET 140 OF 200

DETAILS
UNDERGROUND RACEWAYS
MANHOLE PLANS AND SECTIONS
SCALE AS NOTED

E-12

STATE OF CALIFORNIA - DEPARTMENT OF TRANSPORTATION
Caltrans

DATE	REVISED BY	DATE REVISED
CALCULATED/ DESIGNED BY	BEHZAD GOLEMOHAMMADI	
CHECKED BY		
DESIGN OVERSIGHT		

DATE PLOTTED => 11/17/2006
TIME PLOTTED => 2:35:41 PM
LAST REVISION 00-00-00

ALL DIMENSIONS ARE IN MILLIMETERS UNLESS OTHERWISE SHOWN

FOR REDUCED PLANS ORIGINAL SCALE IS IN MILLIMETERS 0 20 40 60 80

DGN FILE => f:\13103\ms\pse\ybi - advanced duct bank work\elec\ud012.dgn
USERNAME => antonio

CU 04251 EA 012OR1

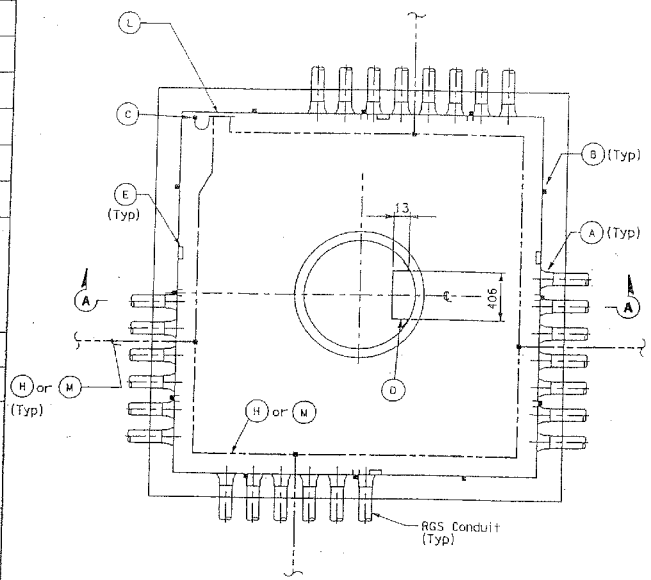

PLAN
SCALE: 1:20

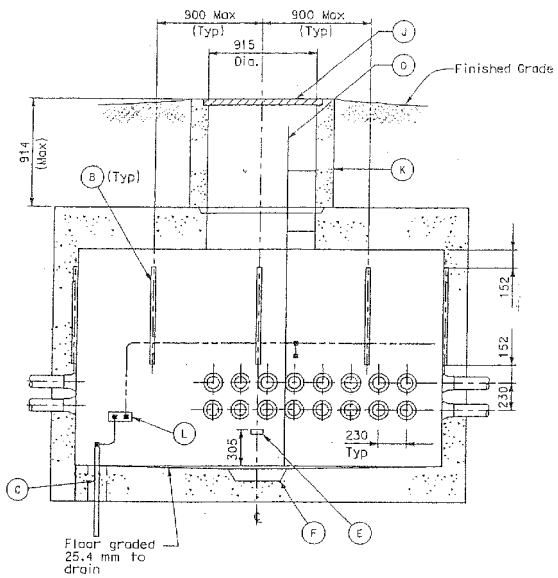

SECTION A-A
SCALE: 1:20

TYPICAL MANHOLE DETAIL

LIST OF MATERIAL

ITEM NO	DESCRIPTION	REMARKS
(A)	End bells. For size & location see manholes plans & sections	
(B)	41 mm X41 mm concrete insert strut channel (flush mounted)	Hot dip galvanized
(C)	Ground rod 19 dia x 3050 long	
(D)	Ladder complete with supports	Hot dip galvanized
(E)	Pull iron-insert type	As required
(F)	305 dia round x 102 deep sump	
(H)	500 kcmil bare copper ground conductor	For 15kV duct bank and manhole
(J)	Cast iron manhole cast cover with engraved nameplate	See notes 1 & 8
(K)	Manhole necking or riser	Length as required
(L)	Ground copper bar, 6 mm thick x 100 mm high x 600 mm long	
(M)	#4/0 AWG bare copper ground conductor	For 600V and TOS/COM duct bank & manhole

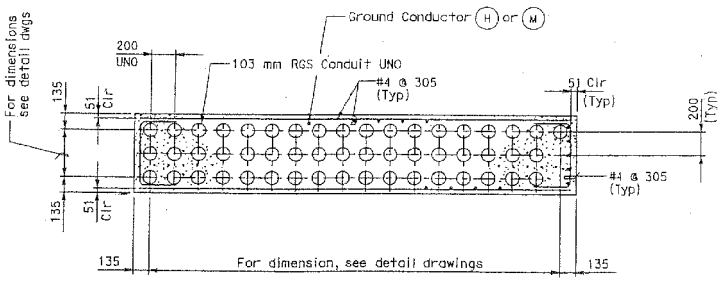

TYPICAL DUCT BANK DETAIL
SCALE: 1:20

NOTES:

1. Manhole, cast iron ring and cover shall be designed for H-20 traffic loading and shall comply with ASTM F1143.
2. Ultimate compressive strength f'c = 25 MPa.
3. Steel reinforcement yield strength Fy=414 MPa.
4. All manhole joints shall be primed with joint primer by manhole supplier. In addition, all joints shall be made watertight by using joint sealant.
5. Prior to setting the manhole, the contractor shall prepare the site by providing a minimum of 152 mm of sand or other suitable base material. The base material shall be compacted and graded to the required level.
6. Manholes shall comply with requirements of ASTM C478 and ASTM C858, as applicable.
7. The ladder shall be designed to the specifications in the latest revision of ANSI publication A1413 and OSHA CFR 1926.1053 and CFR 1910.268, safety requirements for "Fixed Ladder".
8. Manhole cover engraved nameplates shall read as follows:
   a) Caltrans High Voltage } Manholes No. 17,20 and 23.
   b) Caltrans 600 V } Manholes No. 16,19 and 22.
   c) Caltrans TOS&COM } Manholes No. 18,21 and 24.
9. For other related work, not shown on this sheet, see Electrical Special Provisions.
10. References:
    - For duct bank and manhole plans, see sheets E-4 through E-7.
    - For manhole plans and sections, see sheets E-8 through E-12.
    - For duct bank sections, see sheets E-15 & E-16
    - For grounding interface, see sheet E-14.

CONTRACT NO. 04-0120R4
CONTRACT CHANGE ORDER NO. 73
SHEET 191 OF 200

DETAILS
UNDERGROUND RACEWAYS
TYPICAL MANHOLE AND DUCT BANK
SCALE AS NOTED

E-13

DIST	COUNTY	ROUTE	KILOMETER POST TOTAL PROJECT	SHEET NO	TOTAL SHEETS
04	SF	80	12.6/13.2	47	137

REGISTERED ELECTRICAL ENGINEER — 11/03/06 DATE

REGISTERED PROFESSIONAL ENGINEER — JENS ERLINGSSON No. 8245 EXP. 9/30/08 ELECTRICAL — STATE OF CALIFORNIA

PLANS APPROVAL DATE

PB POWER Inc.
A Parsons Brinckerhoff Company
303 Second St., Suite 700N
San Francisco, CA 94107-1317

The State of California or its officers or agents shall not be responsible for the accuracy or completeness of electronic copies of this plan sheet.

Caltrans now has a web site! To get to the web site, go to http://www.dot.ca.gov

DESIGN: ASIGHT
BEHZAD GOLEMOHAMMADI
CALCULATED/ DESIGNED BY
CHECKED BY
DATE REVISED BY
DATE REVISED

DEPARTMENT OF TRANSPORTATION - STATE OF CALIFORNIA

ALL DIMENSIONS ARE IN MILLIMETERS UNLESS OTHERWISE SHOWN

FOR REDUCED PLANS ORIGINAL SCALE IS IN MILLIMETERS 0 20 40 60 80

DGN FILE => t:\13103\ms\pse\yoi - advanced duct bank work\elec\uep13.dgn
USERNAME => antonio

CU 04251 EA 0120R1

LAST REVISION 00-00-00
DATE PLOTTED => 11/17/2006
TIME PLOTTED => 2135:41 PM

NOTES:

1. References:
   - For duct banks and manholes, see sheets E-8 through E-12.
   - For transition structure girder westbound grounding plan, see sheet E-80.
   - For transition structure girder eastbound grounding plan, see sheet E-130.
2. For other related work, not shown on this sheet, see Electrical Special Provisions.

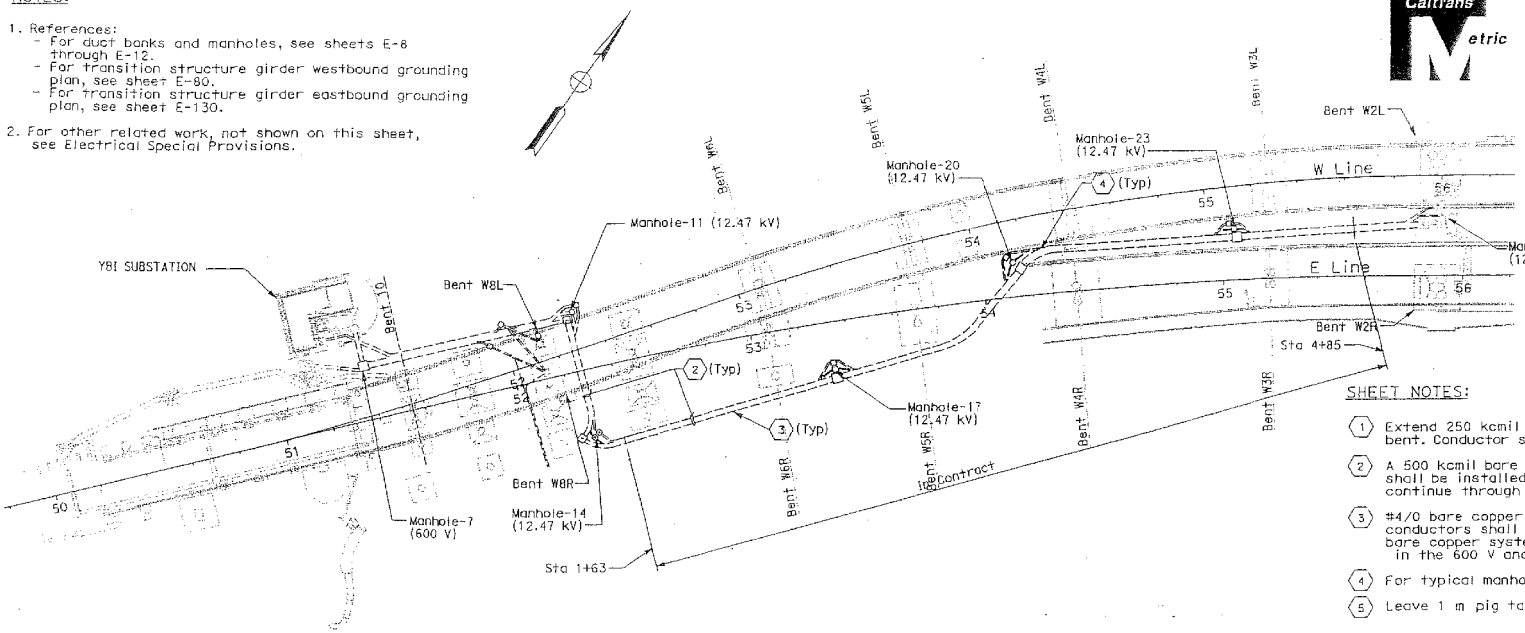

SHEET NOTES:

1. Extend 250 kcmil grounding conductor 4 m towards bent. Conductor shall be burried 762 mm below grade.
2. A 500 kcmil bare copper system grounding conductor shall be installed in the 15 kV duct bank and continue through each 12.47 kV manhole.
3. #4/0 bare copper grounding conductors shall be exothermically welded to the 500 kcmil bare copper system grounding conductor and installed in the 600 V and TOS/COM duct banks and manholes.
4. For typical manhole grounding, see sheet E-13.
5. Leave 1 m pig tail for future extension.

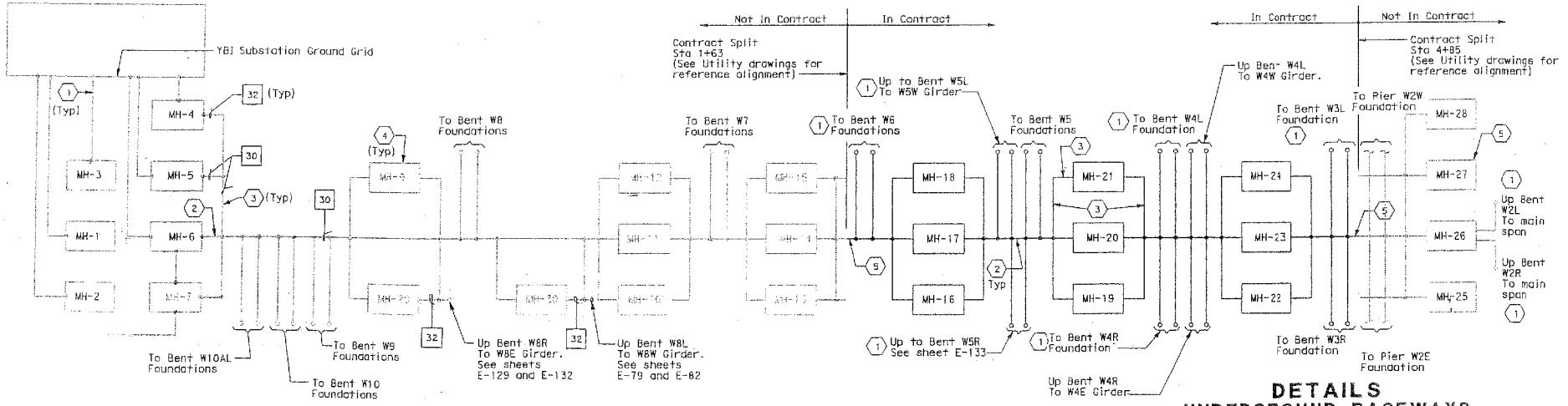

CONTRACT NO. 04A-0120R1
CONTRACT CHANGE ORDER NO. 02
SHEET 44 OF 137

DETAILS
UNDERGROUND RACEWAYS GROUNDING INTERFACE

SCALE: 1:1000

E-14

DIST	COUNTY	ROUTE	KILOMETER POST TOTAL PROJECT	SHEET NO	TOTAL SHEETS
04	SF	80	12.6/13.2	48	137

REGISTERED ELECTRICAL ENGINEER — DATE 11/03/06

REGISTERED PROFESSIONAL ENGINEER — JENS ERLINGSSON — No. 8249 — Exp. 6/30/08 — ELECTRICAL — STATE OF CALIFORNIA

PLANS APPROVAL DATE

PB POWER, Inc.
A Parsons Brinckerhoff Company
303 Second St., Suite 700N
San Francisco, CA 94107-1317

The State of California or its officers or agents shall not be responsible for the accuracy or completeness of electronic copies of this plan sheet.

Caltrans now has a web site! To get to the web site, go to http://www.dot.ca.gov

DESIGN OVERSIGHT: BEHZAD GOLEMOHAMMADI
CALCULATED/DESIGNED BY
CHECKED BY
DATE REVISED BY
DATE REVISED

STATE OF CALIFORNIA - DEPARTMENT OF TRANSPORTATION — Caltrans

FOR REDUCED PLANS ORIGINAL SCALE IS IN MILLIMETERS 0 20 40 60 80
DGN FILE => &REQUEST
USERNAME => &USER
DATE PLOTTED => &DATE
TIME PLOTTED => &TIME
LAST REVISION 00-00-00

CU 04251 EA 0120R1

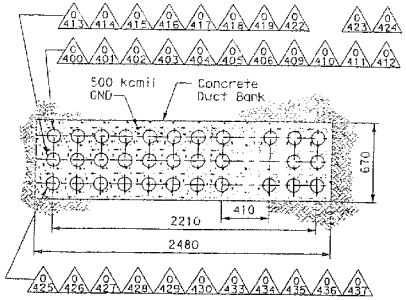

SECTION Q-Q
SCALE: 1:20

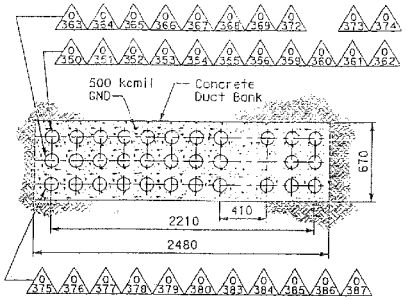

SECTION P-P
SCALE: 1:20

NOTES:

1. References:
   - For duct banks and manholes, see sheets E-4 and E-5.
   - For manhole plans and sections, see sheets E-8 through E-12.
   - For typical manhole and duct bank details, see sheet E-13.
2. For other related work, not shown on this sheet, see Electrical Special Provisions.

DIST	COUNTY	ROUTE	KILOMETER POST TOTAL PROJECT	SHEET NO.	TOTAL SHEETS
04	SF	80	12.6/13.2	49	137

REGISTERED ELECTRICAL ENGINEER — DATE 11/03/06
PLANS APPROVAL DATE
JENS ERLINGSSON No. 8249 EXP. 3/30/08 ELECTRICAL — REGISTERED PROFESSIONAL ENGINEER — STATE OF CALIFORNIA

PB POWER, Inc.
A Parsons Brinckerhoff Company
303 Second St., Suite 700N
San Francisco, CA 94107-1317

The State of California or its officers or agents shall not be responsible for the accuracy or completeness of electronic copies of this plan sheet.

Caltrans now has a web site! To get to the web site, go to http://www.dot.ca.gov

CONTRACT NO. 04-0120R4
CONTRACT CHANGE ORDER NO. 23
SHEET 132 OF 258

DETAILS
UNDERGROUND RACEWAYS
DUCT BANK SECTIONS
SCALE AS NOTED

E-15

DESIGN: BEHZAD GOLEMOHAMMADI
CALCULATED/DESIGNED BY
CHECKED BY
DATE REVISED BY
DATE REVISED
DEPARTMENT OF TRANSPORTATION — STATE OF CALIFORNIA
Caltrans

DATE PLOTTED => 11/17/2006
TIME PLOTTED => 21:35:42 PM
last revision 00-00-00

ALL DIMENSIONS IN MILLIMETERS UNLESS OTHERWISE SHOWN
FOR REDUCED PLANS ORIGINAL SCALE IS IN MILLIMETERS 0 20 40 60 80
DGN FILE => I:\13103\ms\pse\ydi - advanced duct bank work\elec\ug015.dgn
USERNAME => antonia
CU 04251
EA 0120R1

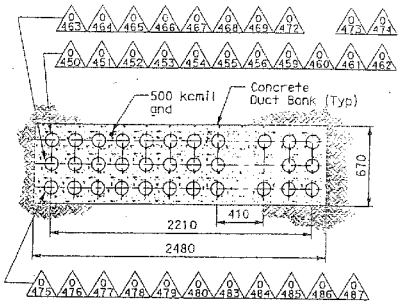

SECTION R-R
SCALE: 1:20

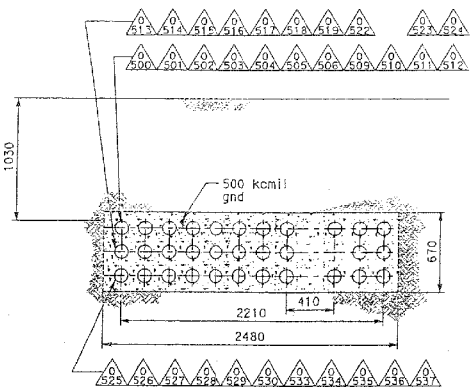

SECTION S-S
SCALE: 1:20

DIST	COUNTY	ROUTE	KILOMETER POST TOTAL PROJECT	SHEET No	TOTAL SHEETS
04	SF	80	12.6/13.2	50	137

Caltrans Metric

11/03/06
REGISTERED ELECTRICAL ENGINEER DATE

REGISTERED PROFESSIONAL ENGINEER
JENS ERLINGSSON
No. 8249
Exp. 9/30/08
ELECTRICAL
STATE OF CALIFORNIA

PLANS APPROVAL DATE

PB POWER, Inc.
A Parsons Brinckerhoff Company
303 Second St., Suite 700N
San Francisco, CA 94107-1317

The State of California or its officers or agents shall not be responsible for the accuracy or completeness of electronic copies of this plan sheet.

Caltrans now has a web site! To get to the web site, go to http://www.dot.ca.gov

NOTES:

1. References:
   - For duct bank and manhole plans, see sheets E-4 through E-7.
   - For manhole plans and sections, see sheets E-8 through E-12.
   - For typical manhole and duct bank details, see sheet E-13.
2. For other related work, not shown on this sheet, see Electrical Special Provisions.

SHEET NOTES:

(1) Not in contract.

CONTRACT NO. 04-0120R4
CONTRACT CHANGE ORDER NO. 79
SHEET 141 **OF** 280

DETAILS
UNDERGROUND RACEWAYS
DUCT BANK SECTIONS
SCALE AS NOTED

E-16

STATE OF CALIFORNIA - DEPARTMENT OF TRANSPORTATION
Caltrans

DESIGN OVERSIGHT: BEHZAD GOLEMOHAMMADI
CALCULATED/DESIGNED BY
CHECKED BY
DATE
REVISED BY
DATE REVISED

LAST REVISION 00-00-00
DATE PLOTTED => 11/17/2006
TIME PLOTTED => 2:35:43 PM

ALL DIMENSIONS IN MILLIMETERS UNLESS OTHERWISE SHOWN

FOR REDUCED PLANS ORIGINAL SCALE IS IN MILLIMETERS 0 20 40 60 80

DGN FILE => t:\1310\ms\pse\ybi - advanced duct bank work\elec\uap16.dgn
USERNAME => antonio
CU 04251
EA 0120R1

DIST	COUNTY	ROUTE	KILOMETER POST TOTAL PROJECT	SHEET NO.	TOTAL SHEETS
				51	137

Caltrans Metric

REGISTERED CIVIL ENGINEER

July 1, 2004
PLANS APPROVAL DATE

REGISTERED PROFESSIONAL ENGINEER Greg W. Edwards No. C36386 Exp. 6-30-06 CIVIL STATE OF CALIFORNIA

The State of California or its officers or agents shall not be responsible for the accuracy or completeness of electronic copies of this plan sheet.

To get to the Caltrans web site, go to: http://www.dot.ca.gov

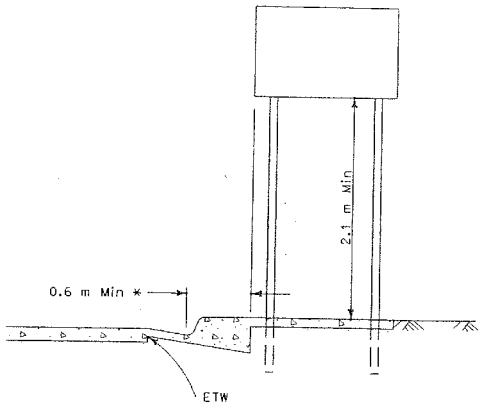

* 0.3 m Min where lateral clearance limited

URBAN LOCATIONS

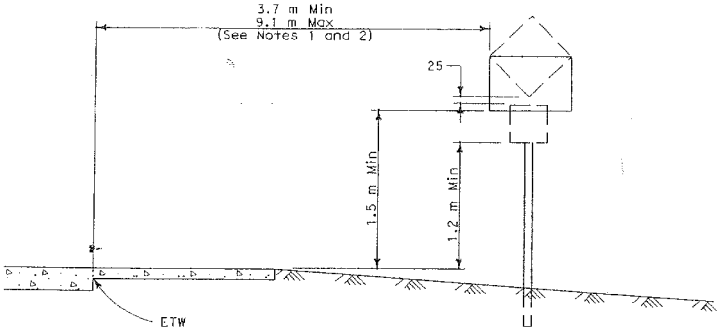

RURAL LOCATIONS

CONVENTIONAL HIGHWAYS AND INTERCHANGE AREAS

NOTES

1. When clear roadside recovery areas are provided, signs shall be placed as far from the edge of traveled way as possible, up to a maximum of 9.1 m. When possible, they shall be placed in protected locations.
2. Signs in medians shall be placed at midpoint of median up to a maximum distance of 9.1 m from edge of traveled way. When appropriate, signs for opposing directions shall be placed back to back.
3. Does not apply at locatioons where minimum horizontal distance is not reasonable due to terrain characteristics, steep slopes, roadway features, or when signs are installed on structures or signal or lighting standards.

ETW = Edge of Traveled Way

EPS = Edge of Paved Shoulder

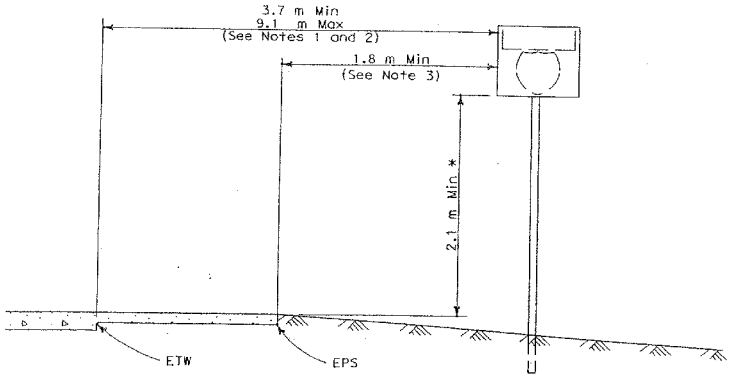

* 1.5 m Min at 9.1 m from ETW

REGULATORY AND WARNING SIGNS AND ROUTE SHIELDS

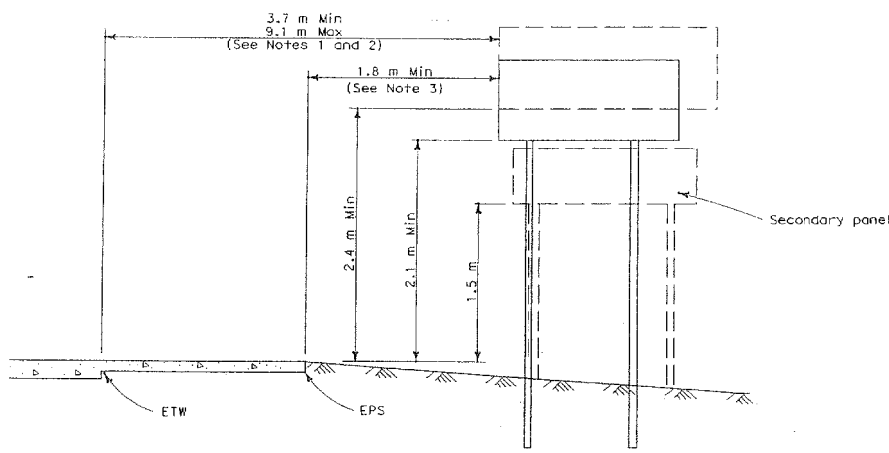

GUIDE SIGNS

FREEWAY AND EXPRESSWAY LOCATIONS

Contract No. 04-0120R4

CONTRACT CHANGE ORDER NO. 92

SHEET 192 **OF** 280

STATE OF CALIFORNIA
DEPARTMENT OF TRANSPORTATION

ROADSIDE SIGNS TYPICAL INSTALLATION DETAILS No. 1

NO SCALE

ALL DIMENSIONS ARE IN MILLIMETERS UNLESS OTHERWISE SHOWN

RS1

2004 Std PLAN RS1

06-18-04

CONTRACT NO. 06-0Y2U8M

CONTRACT CHANGE ORDER NO. 33

SHEET 1M OF 2M

Caltrans Metric

DIST	COUNTY	ROUTE	KILOMETER POST TOTAL PROJECT	SHEET NO.	TOTAL SHEETS
				52	137

REGISTERED CIVIL ENGINEER

July 1, 2004
PLANS APPROVAL DATE

Elliot Sattar
No. C42852
Exp 03-31-2005
CIVIL
REGISTERED PROFESSIONAL ENGINEER
STATE OF CALIFORNIA

The State of California or its officers or agents shall not be responsible for the accuracy or completeness of electronic copies of this plan sheet.

To get to the Caltrans web site, go to: http://www.dot.ca.gov

8 mm ø Hex head bolt with flat washers, fiber washer, nut and jam nut.

∠ 25 mm x 25 mm x 3.2 mm Brace. Required for unbalanced signs greater than 915 mm width.

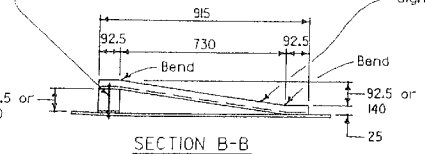

SECTION B-B

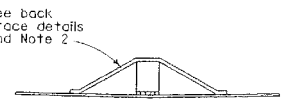

SECTION C-C

Wood block spacer -
19 mm x 89 mm x 150 mm for 610 mm - 882 mm width signs
38 mm x 89 mm x 150 mm for 940 mm - 1372 mm width signs
} 457 mm or more sign depth

No blocks required on signs less than 457 mm in depth. See Note 2.

SECTION D-D

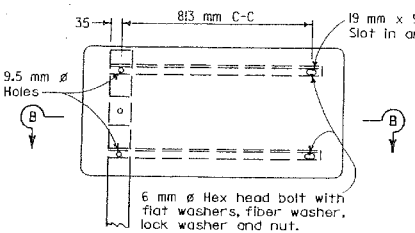

UNBALANCED

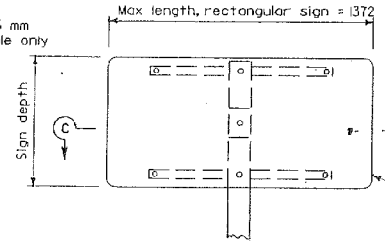

BALANCED

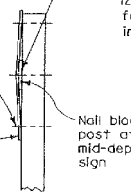

END VIEW

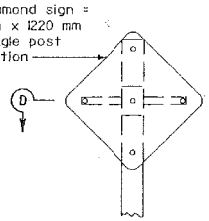

BALANCED

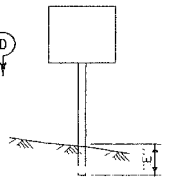

"E" Post Embedment

SINGLE POST INSTALLATION

See Note 5 regarding breakaway feature for single post installations.

POST EMBEDMENT	
POST SIZE (mm)	"E" (mm)
89x89	1100
89x140	1400
140x140	1550
140x184	1850

POST SPACING TABLE		
SIGN PANEL LENGTH "A" (m)	SIGN PANEL OVERHANG "B" (mm)	POST SPACING "C" (mm)
1.420 - 1.670	175 - 300	1070
1.830 & 1.980	300 & 375	1230
2.135 & 2.285	375 & 450	1385
2.440	450	1540
2.590	500	1590
2.740	550	1640
2.890	575	1740
2.540	610	1320
3.200	610	1980
3.350, 3.500, 3.660	610, 685, 765	2130
3.810	765	2280
3.960	765	2430
4.110, 4.420	765, 920	2580
4.270, 4.420	840, 915	2590
4.720, 4.870	915, 990	2890
5.030	990	3050
5.180, 5.330	990, 1065	3200
5.490, 5.640	1065, 1140	3360
5.790	1140	3510
5.940, 6.100	1140, 1220	3660
6.250, 6.400	1140, 1215	3970
6.550	1215	4120
6.700, 6.850	1215, 1290	4270
7.010	1290	4430
7.160, 7.310	1290, 1365	4580

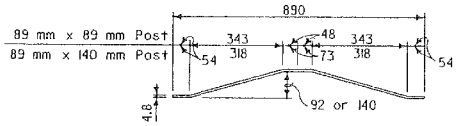

PLAN

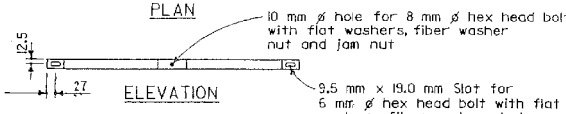

ELEVATION

BACK BRACE DETAILS

See Note 2

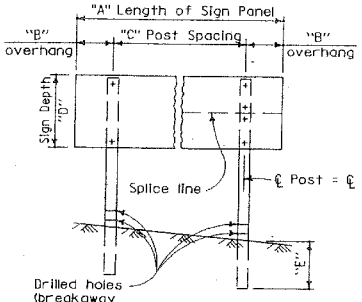

ELEVATION

NOTE

Bolt hole Layout is dependent on type of panel. Drill holes in post to match panel.

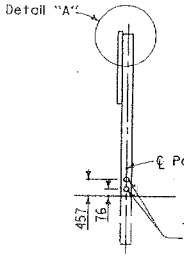

BREAKAWAY FEATURE

Drill 76 mm holes in 140 mm x 184 mm post, 51 mm holes in 140 mm x 140 mm post, and 38 mm holes for 89 mm x 140 mm posts. Orient hole axis parallel to axis of sign. See Note 6 for tolerances of drilled holes.

SIDE VIEW

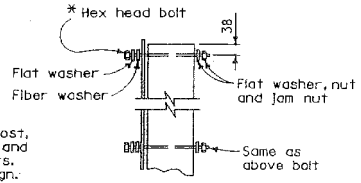

DETAIL A

TWO POST INSTALLATION

*7.9 mm Diameter for single sheet aluminum panel signs.

9.5 mm Diameter for laminated panel signs or framed single sheet aluminum panel signs

NOTES

1. Place long dimension of post cross section normal to sign axis. See Section C-C.
2. Balanced single post installations of unframed single sheet aluminum panel signs shall have block spacers if 457 mm or more in depth and a combination of block spacers and back braces if 457 mm or more in depth and 864 mm or more in width. Sign panels less than 457 mm in depth and 864 mm or more in width shall have back braces only.
3. For post size see sign layout, format or quantity sheets.
4. Balanced single post installations of Laminated Panel and Framed single sheet panel signs require back braces when 864 mm or more in length.
5. Breakaway feature for single post installation shall be the same as the breakaway feature shown for the two post installation.
6. Tolerance for diameter of drilled holes in breakaway feature is ±3 mm.

STATE OF CALIFORNIA
DEPARTMENT OF TRANSPORTATION

ROADSIDE SIGNS-WOOD POST TYPICAL INSTALLATION DETAILS No. 2

NO SCALE

ALL DIMENSIONS ARE IN MILLIMETERS UNLESS OTHERWISE SHOWN

RS2

2004 Std PLAN RS2

06-22-04

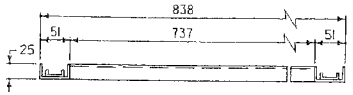

PLAN

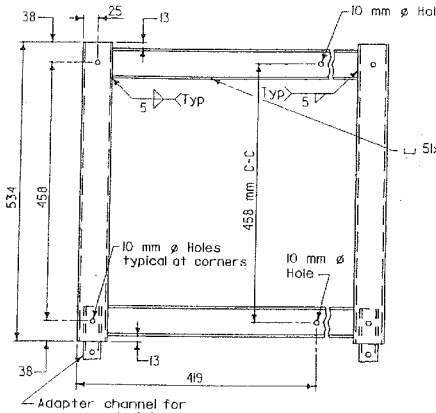

ELEVATION

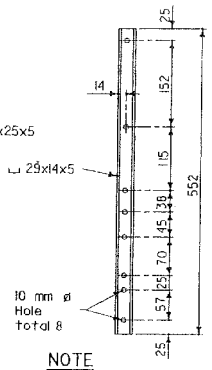

NOTE

Adapter channel rests inside frame channel when used.

ADAPTER CHANNEL

GALVANIZED STEEL FRAME

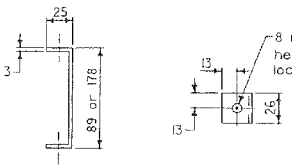

PLAN ELEVATION

SPECIAL BRACKET

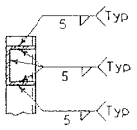

SECTION A-A

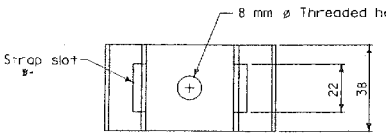

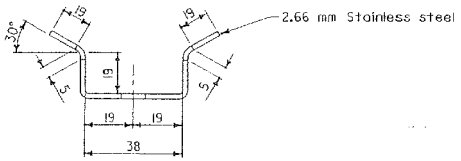

SADDLE BRACKET

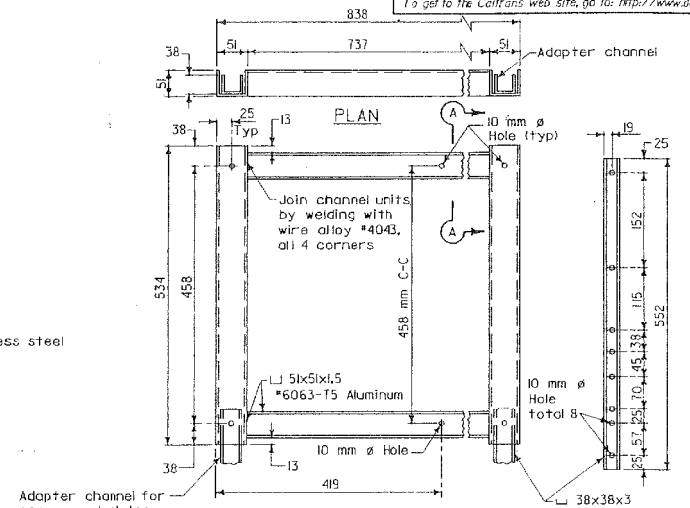

ELEVATION ADAPTER CHANNEL

ALUMINUM FRAME

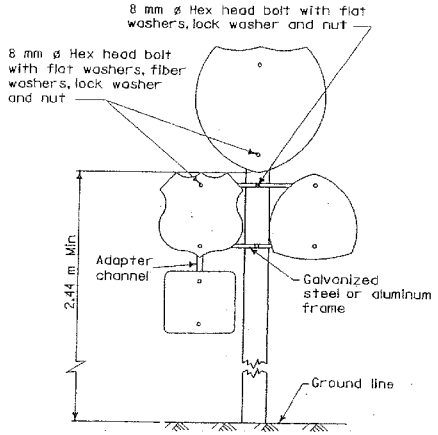

ELEVATION

MULTIPLE SIGN INSTALLATION

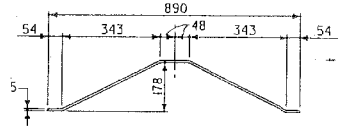

PLAN

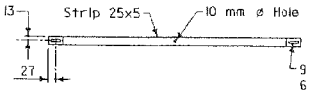

ELEVATION

BACK BRACE DETAILS

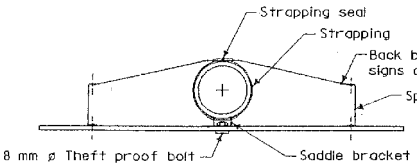

SINGLE SIGN

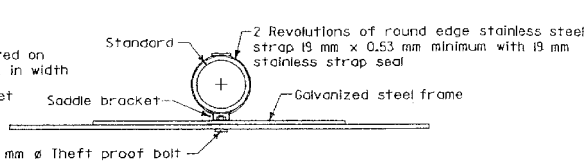

MULTIPLE SIGN

INSTALLATION ON ELECTROLIER, SIGNAL STANDARD OR SIGN STRUCTURE POST

CONTRACT NO. 04-012084

CONTRACT CHANGE ORDER NO. 73

SHEET 191 OF 220

STATE OF CALIFORNIA
DEPARTMENT OF TRANSPORTATION

ROADSIDE SIGNS TYPICAL INSTALLATION DETAILS No. 4

NO SCALE

ALL DIMENSIONS ARE IN MILLIMETERS UNLESS OTHERWISE SHOWN

RS4

Caltrans Metric

DIST	COUNTY	ROUTE	KILOMETER POST TOTAL PROJECT	SHEET NO.	TOTAL SHEETS
				53	137

REGISTERED CIVIL ENGINEER

July 1, 2004
PLANS APPROVAL DATE

Tillet Sorter
No. C42892
Exp 03-31-2006
CIVIL
REGISTERED PROFESSIONAL ENGINEER
STATE OF CALIFORNIA

The State of California or its officers or agents shall not be responsible for the accuracy or completeness of electronic copies of this plan sheet.

To get to the Caltrans web site, go to: http://www.dot.ca.gov

2004 Std PLAN RS4

08-22-04

DIST	COUNTY	ROUTE	KILOMETER POST TOTAL PROJECT	SHEET NO.	TOTAL SHEETS
				54	137

Caltrans Metric

REGISTERED ~~CIVIL~~ ENGINEER

July 1, 2004
PLANS APPROVAL DATE

The State of California or its officers or agents shall not be responsible for the accuracy or completeness of electronic copies of this plan sheet.

REGISTERED PROFESSIONAL ENGINEER Tillat Sattar No. C42597 Exp. 03-31-2006 CIVIL STATE OF CALIFORNIA

To get to the Caltrans web site, go to: http://www.dot.ca.gov

CHANNEL SIZES

SIGN LENGTH (mm)	SIGN DEPTH (mm)	PANEL THICKNESS (mm)	No. OF HORIZONTAL MEMBERS	No. OF VERTICAL MEMBERS	HORZ. MEMBER TYPE	VERT. MEMBER TYPE
Up to 1194		1.6	No frame required			
1219 to 1397		2.0	No frame required			
1422 to 1778	305 to 610	1.6	2	--	A	--
	635 to 914	1.6	2	2	A	A
	940 to 1219	1.6	2	3	A	A
	1245 to 2438	1.6	3	3	B	A
1829 to 1981	305 to 610	1.6	2	--	A	--
	635 to 914	1.6	2	2	A	A
	940 to 1219	1.6	2	3	A	A
	1245 to 1829	1.6	3	3	B	B
	1854 to 2438	1.6	3	3	C	C
2032 to 2286	457 to 1219	2.0	2	3	B	B
	1245 to 1829	2.0	3	3	B	B
	1854 to 2438	2.0	3	3	C	C
2337 to 2591	457 to 1219	2.0	2	3	B	B
	1245 to 2438	2.0	3	3	C	C
2642 to 2896	457 to 1219	2.0	2	3	B	B
	1245 to 2438	2.0	3	3	C	C
2946 to 3353	457 to 1219	2.0	2	3	C	C
	1245 to 2438	2.0	3	3	C	C
	2464 to 3353	2.0	4	4	C	C

NOTE

Type A - 31.8 mm x 31.8 mm x 3.2 mm Channel to be aluminum alloy 6063-T5.
* Type B - 60.3 mm x 31.8 mm x 4.8 mm Channel to be aluminum alloy 6063-T6.
* Type C - 50.8 mm x 50.8 mm x 6.4 mm Channel to be aluminum alloy 6063-T6.

* 44.5 mm x 38.1 mm x 3.2 mm Rectangular tubing aluminum alloy 6063-T6 may be substituted for Types B and B, but more than one type of framing material used on one sign is unacceptable.

POST SPACING

SIGN LENGTH (mm)	CENTERLINE SPACING (mm)
1422 to 1727	1067
1778 to 2032	1219
2083 to 2337	1372
2388 to 2489	1524
2540 to 2642	1575
2692 to 2794	1626
2845 to 2946	1727
2997 to 3099	1829
3150 to 3302	1981
3327 to 3353	2134

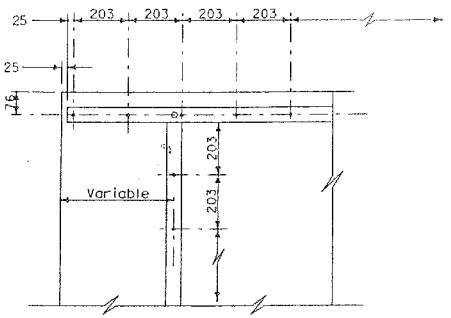

TYPICAL RIVET DETAIL

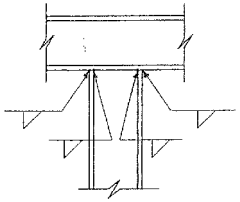

TOP VIEW

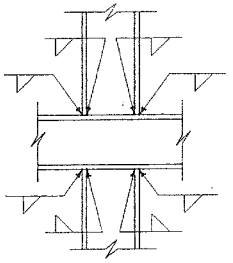

TOP VIEW

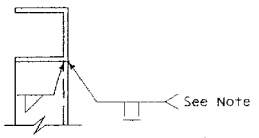

SIDE VIEW
WELD DETAIL No. 1

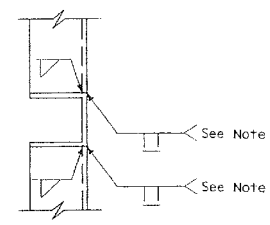

SIDE VIEW
WELD DETAIL No. 2

TYPICAL WELD DETAILS

For rectangular tubing, weld all around and grind beads flush where weld contacts sign panel.

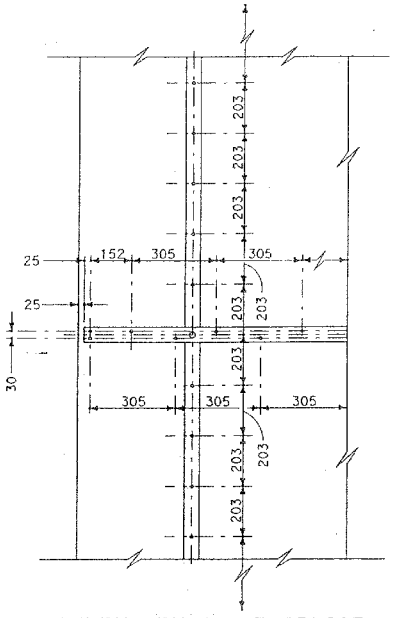

RIVET DETAIL AT SPLICE

CONTRACT NO. 04-012084
CONTRACT CHANGE ORDER NO. 73
SHEET 194 OF 260

STATE OF CALIFORNIA
DEPARTMENT OF TRANSPORTATION

FRAMING DETAILS FOR FRAMED SINGLE SHEET ALUMINUM SIGNS RECTANGULAR SHAPE

NO SCALE

ALL DIMENSIONS ARE IN MILLIMETERS UNLESS OTHERWISE SHOWN

S93

2004 Std PLAN S93

06-22-04

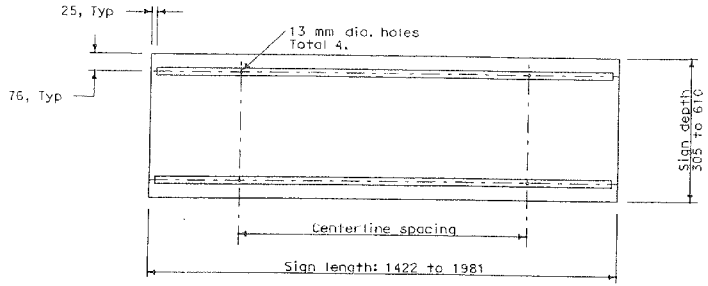

ROADSIDE SIGN No. 1

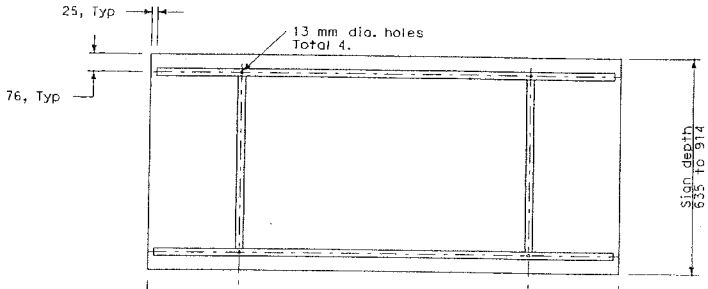

ROADSIDE SIGN No. 2

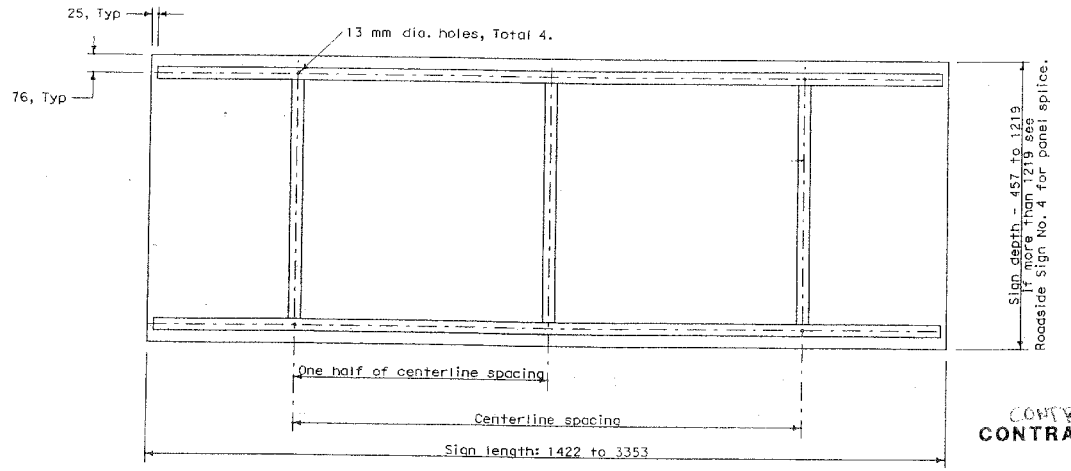

ROADSIDE SIGN No. 3

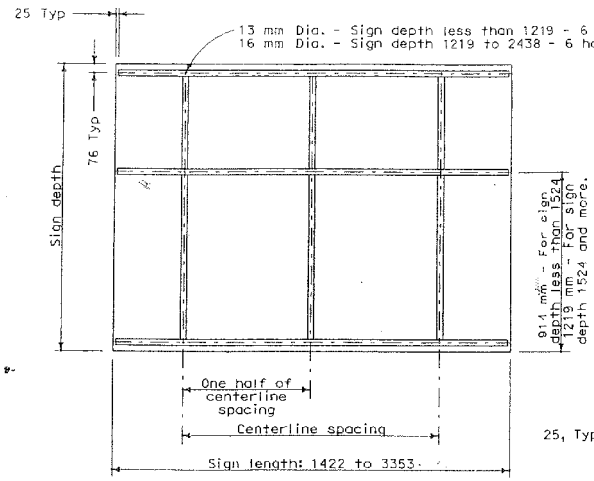

ROADSIDE SIGN No. 4

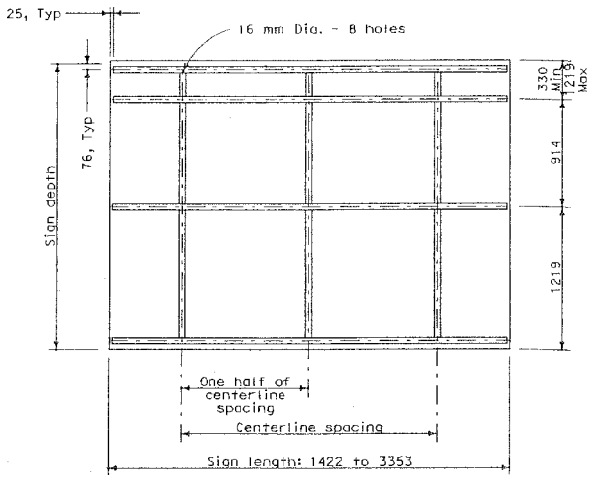

ROADSIDE SIGN No. 5

NOTES

1. See "FRAMING DETAILS FOR SINGLE SHEET ALUMINUM SIGNS RECTANGULAR SHAPE".
2. All members welded at joints as shown on Standard Plan S93.

CONTRACT NO. 06-0V2024
CONTRACT CHANGE ORDER NO. 93
SHEET 199 OF 236

STATE OF CALIFORNIA
DEPARTMENT OF TRANSPORTATION

ROADSIDE SINGLE SHEET ALUMINUM SIGNS RECTANGULAR SHAPE

NO SCALE

ALL DIMENSIONS ARE IN MILLIMETERS UNLESS OTHERWISE SHOWN

S94

DIST	COUNTY	ROUTE	KILOMETER POST TOTAL PROJECT	SHEET NO.	TOTAL SHEETS
				55	137

REGISTERED CIVIL ENGINEER

July 1, 2004
PLANS APPROVAL DATE

REGISTERED PROFESSIONAL ENGINEER
Tittot Sottar
No. C42860
Exp 03-31-2005
CIVIL
STATE OF CALIFORNIA

The State of California or its officers or agents shall not be responsible for the accuracy or completeness of electronic copies of this plan sheet.

To get to the Caltrans web site, go to: http://www.dot.ca.gov

2004 Std PLAN S94

08-22-04

DIST	COUNTY	ROUTE	KILOMETER POST TOTAL PROJECT	SHEET NO.	TOTAL SHEETS
				56	137

Caltrans Metric

REGISTERED CIVIL ENGINEER

July 1, 2004
PLANS APPROVAL DATE

The State of California or its officers or agents shall not be responsible for the accuracy or completeness of electronic copies of this plan sheet.

To get to the Caltrans web site, go to: http://www.dot.ca.gov

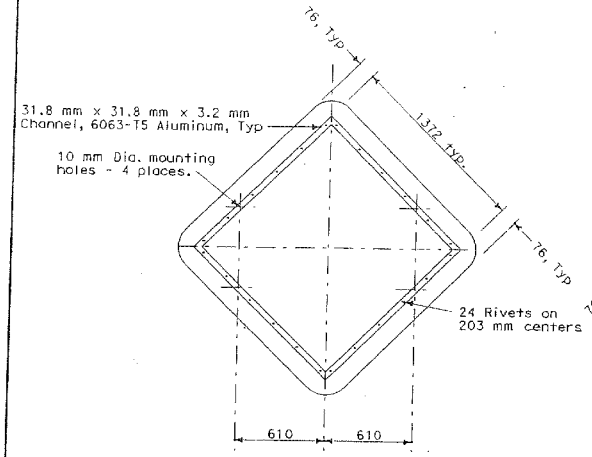

ROADSIDE SIGN No. 6

Framing detail for 1524 mm x 1524 mm diamond

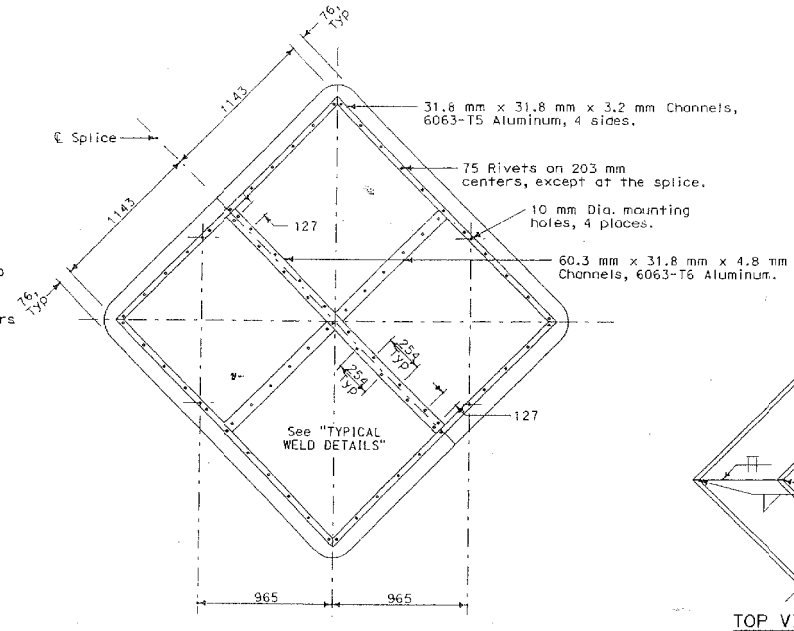

ROADSIDE SIGN No. 8

Framing detail for 2438 mm x 2438 mm diamond. Made from 2 - 1219 mm x 2438 mm panels, spliced and braced by channels as shown.

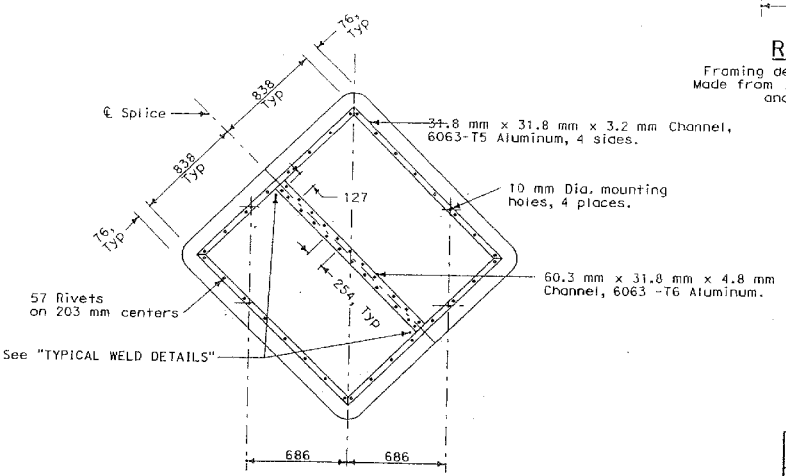

ROADSIDE SIGN No. 7

Framing detail for 1829 mm x 1829 mm diamond. Made from 2 - 914 mm x 1829 mm panels, spliced and braced by channels as shown.

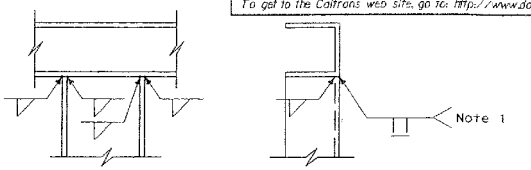

TOP VIEW SIDE VIEW

WELD DETAIL No. 3

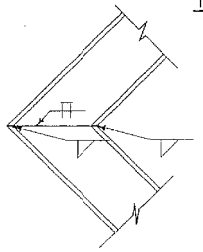

TOP VIEW

WELD DETAIL No. 4

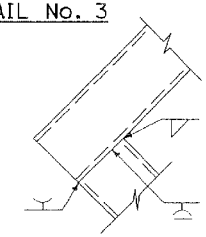

TOP VIEW

ALTERNATE WELD DETAIL No. 4A

Weld all around outside

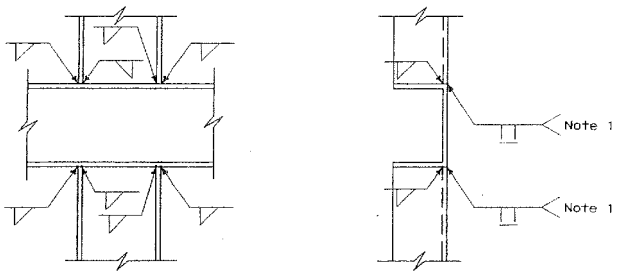

TOP VIEW SIDE VIEW

WELD DETAIL No. 5

TYPICAL WELD DETAILS

CHANNEL SIZES

Sign Size (mm)	Panel Thickness (mm)	Frame Type
1219 x 1219	1.6	No frame required
1219 x 1219	2.0	No frame required
1524 x 1524	2.0	See Roadside Sign No. 6
1829 x 1829	2.0	See Roadside Sign No. 7
2438 x 2438	2.0	See Roadside Sign No. 8

STATE OF CALIFORNIA
DEPARTMENT OF TRANSPORTATION

ROADSIDE SINGLE SHEET ALUMINUM SIGNS DIAMOND SHAPE

NO SCALE

ALL DIMENSIONS ARE IN MILLIMETERS UNLESS OTHERWISE SHOWN

S95

CONTRACT NO. 04-012084
CONTRACT CHANGE ORDER NO. 73
SHEET 240 OF 280

2004 Std PLAN S95

06-22-04

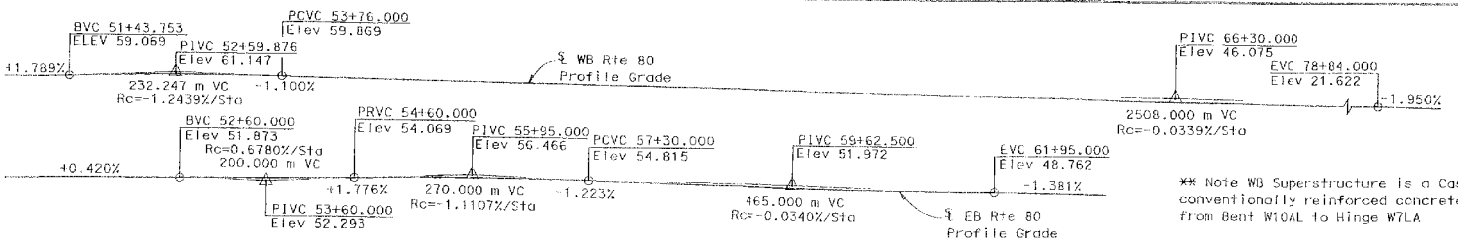

** Note WB Superstructure is a Cast-in-Place conventionally reinforced concrete box girder from Bent W10AL to Hinge W7LA

DIST.	COUNTY	ROUTE	KILOMETER POST TOTAL PROJECT	SHEET NO.	TOTAL SHEETS
04	SF	80		57	137

REGISTERED ENGINEER - CIVIL
A.L. ELY No. 18550 Exp. 6-30-07 CIVIL
PLANS APPROVAL DATE
The State of California or its officers or agents shall not be responsible for the accuracy or completeness of electronic copies of this plan sheet.

T.Y.LIN / MOFFATT & NICHOL
TWO HARRISON STREET
SAN FRANCISCO, CA 94105

PROFILE GRADE
NO SCALE

Note: Work shown in addition to that designated as "Advance Const Work" is for informational purposes only.

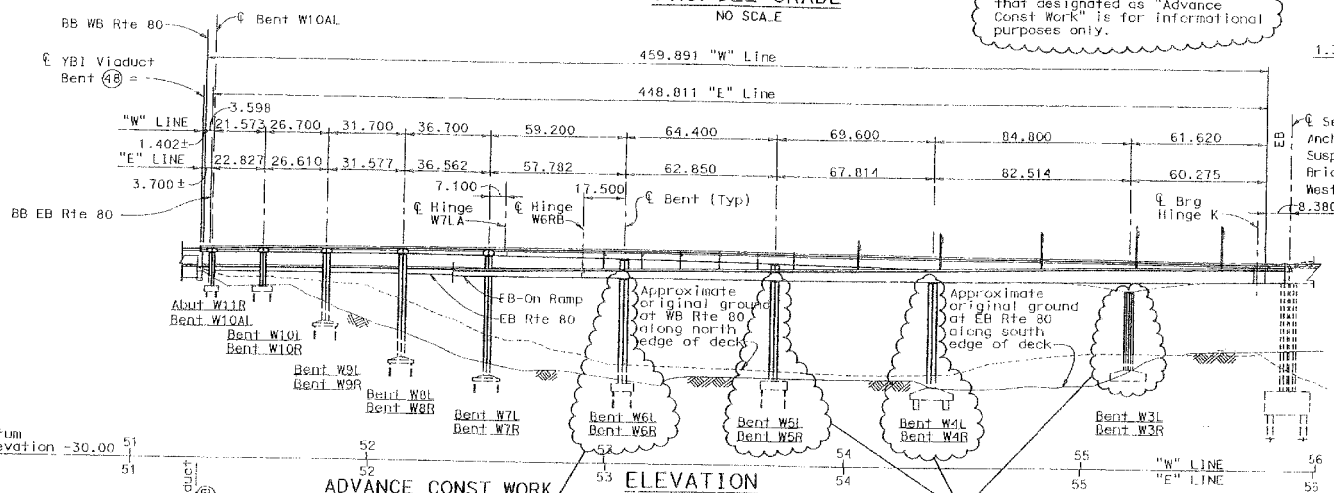

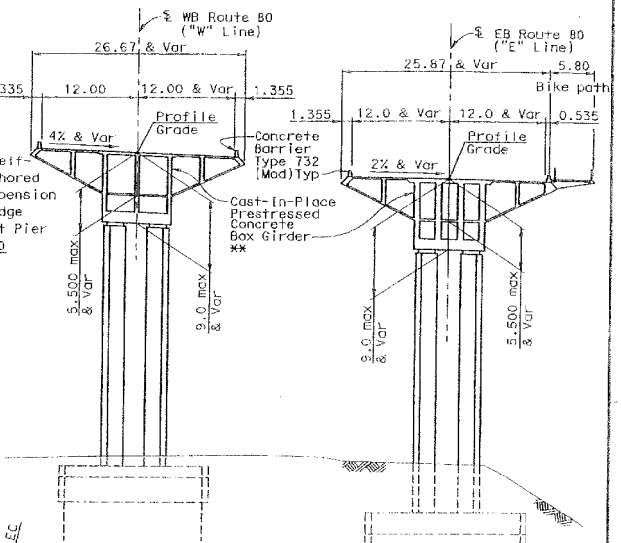

TYPICAL SECTION
(Bent W3L & W3R Shown)
1:300

Notes:
For approximate bridge quantities and pile data table, see "General Notes" sheet.

------ Indicates existing structures.

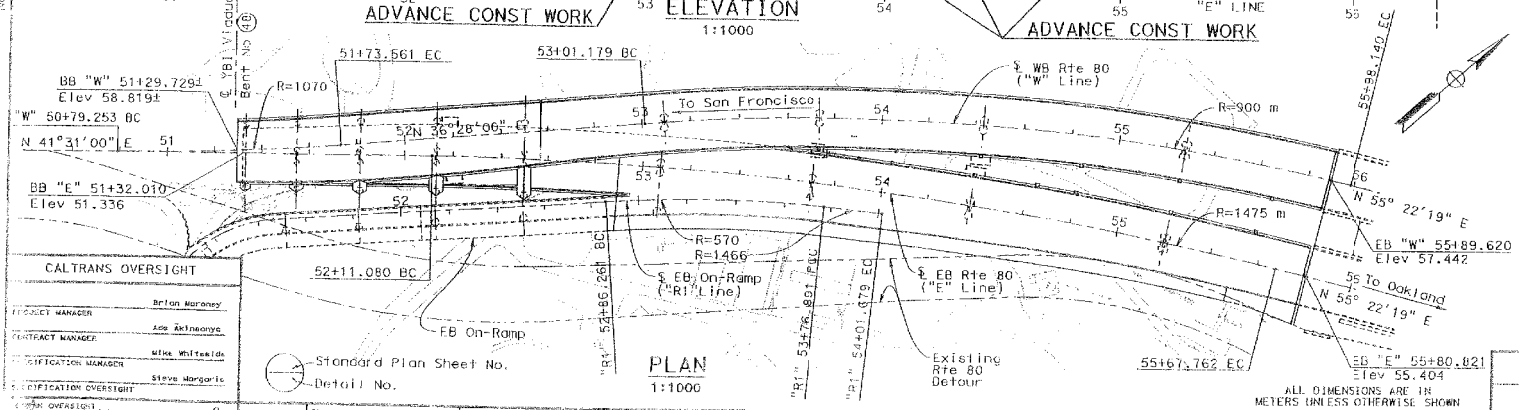

ALL DIMENSIONS ARE IN METERS UNLESS OTHERWISE SHOWN

SUPPLEMENTAL SHEET
CONTRACT NO. 04-0N2064
CONTRACT CHANGE ORDER NO. 45
SHEET 2A OF 180

CALTRANS OVERSIGHT	
PROJECT MANAGER	Brian Maroney
CONTRACT MANAGER	Ade Akinsanya
CERTIFICATION MANAGER	Mike Whiteside
CERTIFICATION OVERSIGHT	Steve Margaris

CALTRANS OVERSIGHT
JOHN MOOR, BERNARD CHAN, JUAN F. CAMPOS
SIGN OFF DATE
Rev. Date: 5-18-98

DESIGN	S. Desai	CHECKED	Jain	LOAD FACTOR DESIGN	LIVE LOADING: HS20-44 AND ALTERNATIVE AND PERMIT DESIGN LOAD
DETAILS	BY van Eyn/Zucchi/Mal	CHECKED	Jain	BY Desai	CHECKED Alcorc2
QUANTITIES	BY Liao	CHECKED	E. Nichol	SPECIFICATIONS BY J.Ely	PLANS AND SPECS SIGNED BY Jain

PREPARED FOR THE STATE OF CALIFORNIA DEPARTMENT OF TRANSPORTATION

Jal Birdy
PROJECT ENGINEER

BRIDGE NO. 34-0006 L/R
KILOMETER POST 12.8

CU 04251
EA 0120S1

DISREGARD PRINTS BEARING EARLIER REVISION DATES ------

ORIGINAL SCALE IN MILLIMETERS 0 10 20 30 40 50 60 70 80 90 100

FILE => E:\4141-06\CADD\TS\Final Const\Adv Const Pkg TR2\eapp0.dgn

SAN FRANCISCO OAKLAND BAY BRIDGE
EAST SPAN SEISMIC SAFETY PROJECT

YBI TRANSITION STRUCTURES

ADVANCE CONST PACKAGE NO.1R2

GENERAL PLAN

REVISION DATES (PRELIMINARY STAGE ONLY)									SHEET	OF
10/4/06	11/2/06	11/29/06	12/8/06	1/4/07	2/2/07	3/2/07	3/9/07	11/2/07	1	65

PLOTTED => 11/29/2006 11:31:35 PM

APPROXIMATE BRIDGE QUANTITIES

	WB STRUCTURE	EB STRUCTURE	TOTAL
STRUCTURE EXCAVATION (BRIDGE)	2898	5919	8820 M3
STRUCTURE EXCAVATION (TYPE D)	-	542	540 M3
STRUCTURE EXCAVATION (TYPE H)	244	708	950 M3
STRUCTURE EXCAVATION (CLASS II)	-	54	50 M3
STRUCTURE EXCAVATION (ROCK)	3098	3945	7040 M3
STRUCTURE BACKFILL (BRIDGE)	2223	5355	7580 M3
FURNISH STEEL PILING (W 360 X 196)	4164	6707	10871 M
DRIVE STEEL PILE (W 360 X 196)	240	352	592 EA
2400MM CAST-IN-DRILLED-HOLE CONCRETE PILING	-	109	109 M
2400MM CAST-IN-DRILLED HOLE CONCRETE PILING (ROCK SOCKET)	-	68	68 M
TIEDOWN ANCHOR	68	36	104 EA
STRUCTURAL CONCRETE, BRIDGE FOOTING	3925	5562	9490 M3
STRUCTURAL CONCRETE, BRIDGE	3573	3777	7350 M3
BAR REINFORCING STEEL (BRIDGE)	1375072	1835160	3210230 KG
BRIDGE DECK DRAINAGE SYSTEM	487	341	830 KG

GENERAL NOTES

Load Factor Design

Design: Caltrans Design Specifications-April 2000 (LFD)
(1996 AASHTO with Interims and revisions by Caltrans)
Dead Load: Includes 1675 N/m2 for future wearing surface on roadbed
Live Load: HS20-44 and alternative end permit design load
Bike Path Live Load: 4000 N/m2
Future Mass Transit Loading:

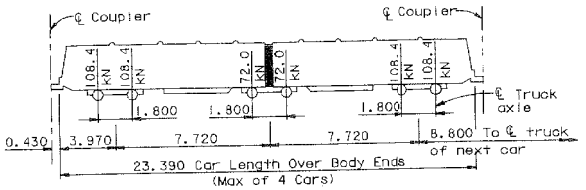

Seismic Loading: Refer to project specific seismic design criteria for San Francisco Oakland Bay Bridge East Span Seismic Safety Project Dated 01-08-00 See 'Site Specific Response Spectra'

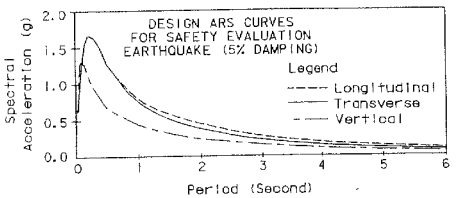

SITE SPECIFIC RESPONSE SPECTRA

Reinforced Concrete: Fy = 420 MPa
F'c = See 'Concrete Strength & Type Limits'

PILE DATA

LOCATION	DESIGN LOADING	NOMINAL RESISTANCE COMPRESSION	NOMINAL RESISTANCE TENSION	DESIGN TIP ELEVATION (1)	(2)	(3)	SPECIFIED TIP ELEVATION	MINIMUM ROCK SOCKET LENGTH
PILE TYPE W 360 x 196 ASTM A-992 (GRADE 50)								
BENT W6L	1350 kN	2700 kN	1350 kN	-11.5	-6.5	-2.0	-11.5	
BENT W5L	1350 kN	2700 kN	1350 kN	-10.5	-6.5	-3.0	-10.5	
BENT W6R NORTH COLUMN	1350 kN	2700 kN	1350 kN	-13.0	-6.5	-2.0	-13.0	
BENT W6R SOUTH COLUMN	1350 kN	2700 kN	1350 kN	-18.0	-13.5	-4.5	-18.0	
BENT W5R NORTHERLY 7 PILE ROWS	1350 kN	2700 kN	1350 kN	-13.5	-10.0	-5.5	-13.5	
BENT W5R SOUTHERLY 12 PILE ROWS	1350 kN	2700 kN	1350 kN	-16.5	-11.0	-5.5	-16.5	
2400 mm DIA CIDH CONCRETE PILES								
BENT W4R PILE NO. 1	-	25200 kN	8900 kN	-15.0	-15.0	-15.0	-15.0	3.5
BENT W4R PILE NOS. 2 & 3	-	25200 kN	8900 kN	-13.5	-13.5	-13.5	-13.5	3.5
BENT W4R PILE NOS. 4,5 & 6	-	25200 kN	8900 kN	-12.5	-12.5	-12.5	-12.5	3.5
BENT W4R PILE NOS. 7 & 8	-	25200 kN	8900 kN	-12.0	-12.0	-12.0	-12.0	4.0
BENT W4R PILE NOS. 9,10 & 11	-	25200 kN	8900 kN	-10.0	-10.0	-10.0	-10.0	4.0
BENT W4R PILE NO.12	-	25200 kN	8900 kN	-9.5	-9.5	-9.5	-9.5	4.5
BENT W4R PILE NOS. 13,14 & 15	-	25200 kN	8900 kN	-8.0	-8.0	-8.0	-8.0	4.5
BENT W4R PILE NOS. 16 & 17	-	25200 kN	8900 kN	-6.0	-6.0	-6.0	-6.0	4.5

Design tip elevation is controlled by the following demands: (1) Compression, (2) Tension, (3) Lateral. Rock socket lengths shown represent minimum embedment into moderately hard rock.

FOOTING PRESSURE

	ALLOWABLE	ULTIMATE	MAX DESIGN (SERVICE LOAD)
BENT W4L	1800 kN/m2	5400 kN/m2	765 kN/m2
BENT W3L	1550 kN/m2	4650 kN/m2	765 kN/m2
BENT W3R	1350 kN/m2	4050 kN/m2	765 kN/m2

APPLICABLE STANDARD PLANS (DATED JULY 1999)

A10A	ABBREVIATIONS
A10B	SYMBOLS
A62B	LIMITS OF PAYMENT FOR EXCAVATION AND BACKFILL - BRIDGE SURCHARGE AND WALL
A62C	LIMITS OF PAYMENT FOR EXCAVATION AND BACKFILL - BRIDGE
B0-1	BRIDGE DETAILS
B7-6	DECK DRAINS TYPES D-1 AND D-2

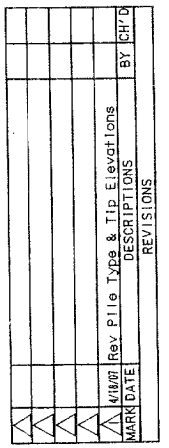

INDEX TO BRIDGE PLANS

1. GENERAL PLAN
2. GENERAL NOTES
3. FOUNDATION PLAN NO. 1
4. FOUNDATION PLAN NO. 2
5. PILE & TIEDOWN ANCHOR DETAILS
6. BENT ELEVATIONS W6 & W5
7. BENT ELEVATIONS W4 & W3
8. BENT W6L DETAILS NO. 1
9. BENT W6L DETAILS NO. 2
10. BENT W5L DETAILS NO. 1
11. BENT W5L DETAILS NO. 2
12. BENT W4L DETAILS NO. 1
13. BENT W4L DETAILS NO. 2
14. BENT W3L DETAILS NO. 1
15. BENT W3L DETAILS NO. 2
16. BENT W6R DETAILS NO. 1
17. BENT W6R DETAILS NO. 2
18. BENT W6R DETAILS NO. 3
19. BENT W5R DETAILS NO. 1
20. BENT W5R DETAILS NO. 2
21. BENT W4R DETAILS NO. 1
22. BENT W4R DETAILS NO. 2
23. BENT W3R DETAILS NO. 1
24. BENT W3R DETAILS NO. 2

25-45. LOG OF TEST BORINGS NO. 1 TO NO. 21
46-65. 'AS BUILT' LOG OF TEST BORINGS NO. 1 TO NO. 20

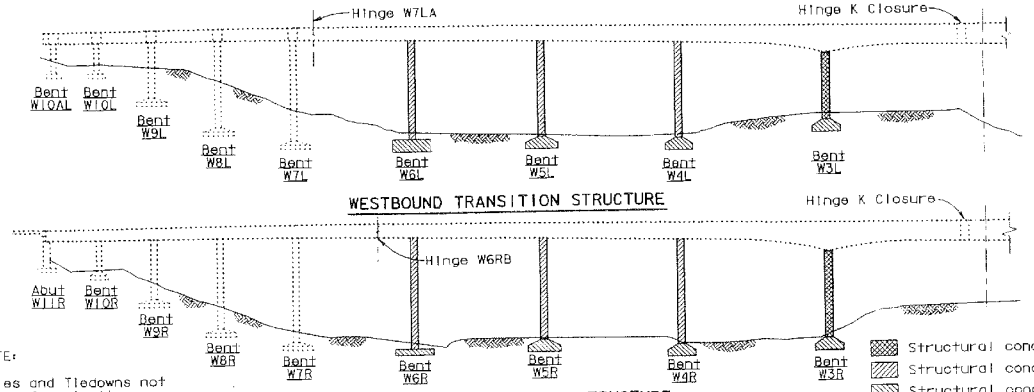

NOTE:
Piles and Tiedowns not shown for clarity.

ALL DIMENSIONS ARE IN METERS UNLESS OTHERWISE SHOWN

CONCRETE STRENGTH & TYPE LIMITS

Structural concrete, bridge (35 MPa at 28 days)
Structural concrete, bridge (25 MPa at 28 days)
Structural concrete, bridge footing (25 MPa at 28 days)

SUPPLEMENTAL SHEET
CONTRACT NO. 04-0120K4
CONTRACT CHANGE ORDER NO. 75
SHEET 20 OF 120

SAN FRANCISCO OAKLAND BAY BRIDGE
EAST SPAN SEISMIC SAFETY PROJECT
YBI TRANSITION STRUCTURES
ADVANCE CONST PACKAGE NO. 1R2
GENERAL NOTES

DIST.	COUNTY	ROUTE	KILOMETER POST TOTAL PROJECT	SHEET NO.	TOTAL SHEETS
04	SF	80		58	157

REGISTERED ENGINEER - CIVIL
A.L. ELY No. 18880 Exp. 6-30-07 CIVIL
REGISTERED PROFESSIONAL ENGINEER STATE OF CALIFORNIA
PLANS APPROVAL DATE
The State of California or its officers or agents shall not be responsible for the accuracy or completeness of electronic copies of this plan sheet.

T.Y. LIN / MOFFATT & NICHOL
TWO HARRISON STREET
SAN FRANCISCO, CA 94105

DESIGN OVERSIGHT
JOHN MOOK, BERNARD CHAN, JUAN F. CARPIO
SIGN OFF DATE
Rev. Dates 5-16-96

	BY	CHECKED
DESIGN	Desai	Jain
DETAILS	van Ryn/Zucchi/Mal	Jain
QUANTITIES	Liao	C. Nicol

PREPARED FOR THE STATE OF CALIFORNIA DEPARTMENT OF TRANSPORTATION
Jal Birdy
PROJECT ENGINEER

BRIDGE NO. 34-0006 L/R
KILOMETER POST 12.8
CU 04251
EA 012051

DISREGARD PRINTS BEARING EARLIER REVISION DATES

ORIGINAL SCALE IN MILLIMETERS FOR REDUCED PLANS 0 10 20 30 40 50 60 70 80 90 100

SHEET 2R1 OF 65

DATE PLOTTED => 4/24/2007 TIME PLOTTED => 15:28:03 PM
USERNAME => Feinman
FILE => P:\04141-06\ADD\1R2\final Contract Adv Const Pkg 1R2\ct1r2002.dgn
Nov 29, 2006

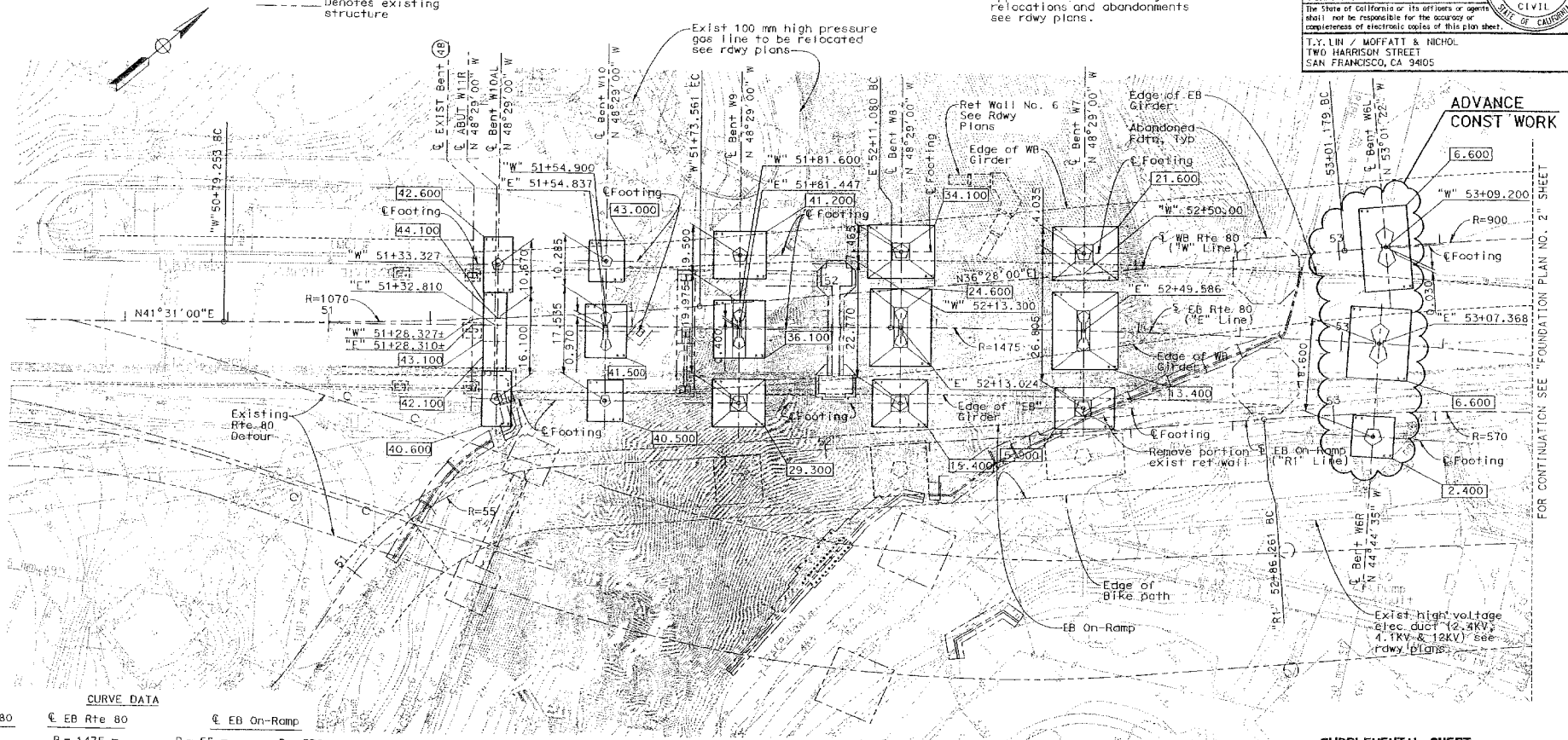

CURVE DATA

℄ WB Rte 80	℄ EB Rte 80	℄ EB On-Ramp	
R = 1070 m	R = 1475 m	R = 55 m	R = 570 m
Δ = 05°03'00"	Δ = 13°51'19"	Δ = 53°57'54"	Δ = 09°06'36"
T = 47.185 m	T = 179.215 m	T = 28.003 m	T = 45.411 m
L = 94.308 m	L = 356.682 m	L = 51.803 m	L = 90.630 m
R = 900 m			
Δ = 18°54'16"			
T = 149.842 m			
L = 296.961 m			

PARTIAL PLAN
1:400

Note: Work shown in addition to that designated as "Advance Const Work" is for informational purposes only.

ALL DIMENSIONS ARE IN METERS UNLESS OTHERWISE SHOWN

SUPPLEMENTAL SHEET
CONTRACT CHANGE ORDER NO. 10
SHEET 20 OF 20

SAN FRANCISCO OAKLAND BAY BRIDGE
EAST SPAN SEISMIC SAFETY PROJECT
YBI TRANSITION STRUCTURES
ADVANCE CONST PACKAGE NO.1R2
FOUNDATION PLAN NO.1

DIST.	COUNTY	ROUTE	KILOMETER POST TOTAL PROJECT	SHEET NO.	TOTAL SHEETS
04	SF	80		59	137

REGISTERED ENGINEER - CIVIL
A.L. FLY No. 18880 Exp. 6-30-07 CIVIL
PLANS APPROVAL DATE
The State of California or its officers or agents shall not be responsible for the accuracy or completeness of electronic copies of this plan sheet.

T.Y. LIN / MOFFATT & NICHOL
TWO HARRISON STREET
SAN FRANCISCO, CA 94105

DESIGN OVERSIGHT
JHN MOOK, BERNARD CHAN, JUAN F. CARPIO
SIGN OFF DATE
Rev. Dates: 5-18-98

SCALE:	VERT.DATUM NGVD 29	HORZ.DATUM NAD 83
PHOTOGRAMMETRY AS OF:	ALIGNMENT TIES	
SURVEYED BY	DRAFTED BY	
FIELD CHECKED BY	CHECKED BY	

DESIGN	BY Desai	CHECKED Jain
DETAILS	BY Von Ryn/Zuachi/Mel	CHECKED Jain
QUANTITIES	BY Liao	CHECKED E. Nichol

PREPARED FOR THE STATE OF CALIFORNIA DEPARTMENT OF TRANSPORTATION

Jal Birdy
PROJECT ENGINEER

BRIDGE NO. 34-0006 L/R
KILOMETER POST 12.6

CU 04251
EA 012051

ORIGINAL SCALE IN MILLIMETERS FOR REDUCED PLANS 0 10 20 30 40 50 60 70 80 90 100

DISREGARD PRINTS BEARING EARLIER REVISION DATES

REVISION DATES (PRELIMINARY STAGE ONLY)
11/2006 11/2006 11/2006 3/2006 5/2006 3/2006 5/2006 5/2006 11/2006

SHEET 3 OF 65

FILE =j:\c\4141-06\CAD\TS\Final Const\Adv Const Pkg 1R2\ccfnp01.dgn

DGN: BENTLEY => Peterson DATE PLOTTED => 11/29/2006 TIME PLOTTED => 3:12:03 PM
DESIGN/INITIAL/PROFESSIONAL APPROVAL DATE
29, 2006

DIST.	COUNTY	ROUTE	KILOMETER POST TOTAL PROJECT	SHEET NO.	TOTAL SHEETS
04	SF	80		60	137

Caltrans Metric

REGISTERED ENGINEER - CIVIL

PLANS APPROVAL DATE

The State of California or its officers or agents shall not be responsible for the accuracy or completeness of electronic copies of this plan sheet.

REGISTERED PROFESSIONAL ENGINEER A.L. ELY No. 18880 Exp. 6-30-07 CIVIL STATE OF CALIFORNIA

T.Y. LIN / MOFFATT & NICHOL
TWO HARRISON STREET
SAN FRANCISCO, CA 94105

NOTE:

1. For limits of payment for structure excavation and backfill, see "Pile & Tiedown Anchor Details" sheet.
2. Utility locations shown are approximate, for utility relocations and abandonments see rdwy plans.

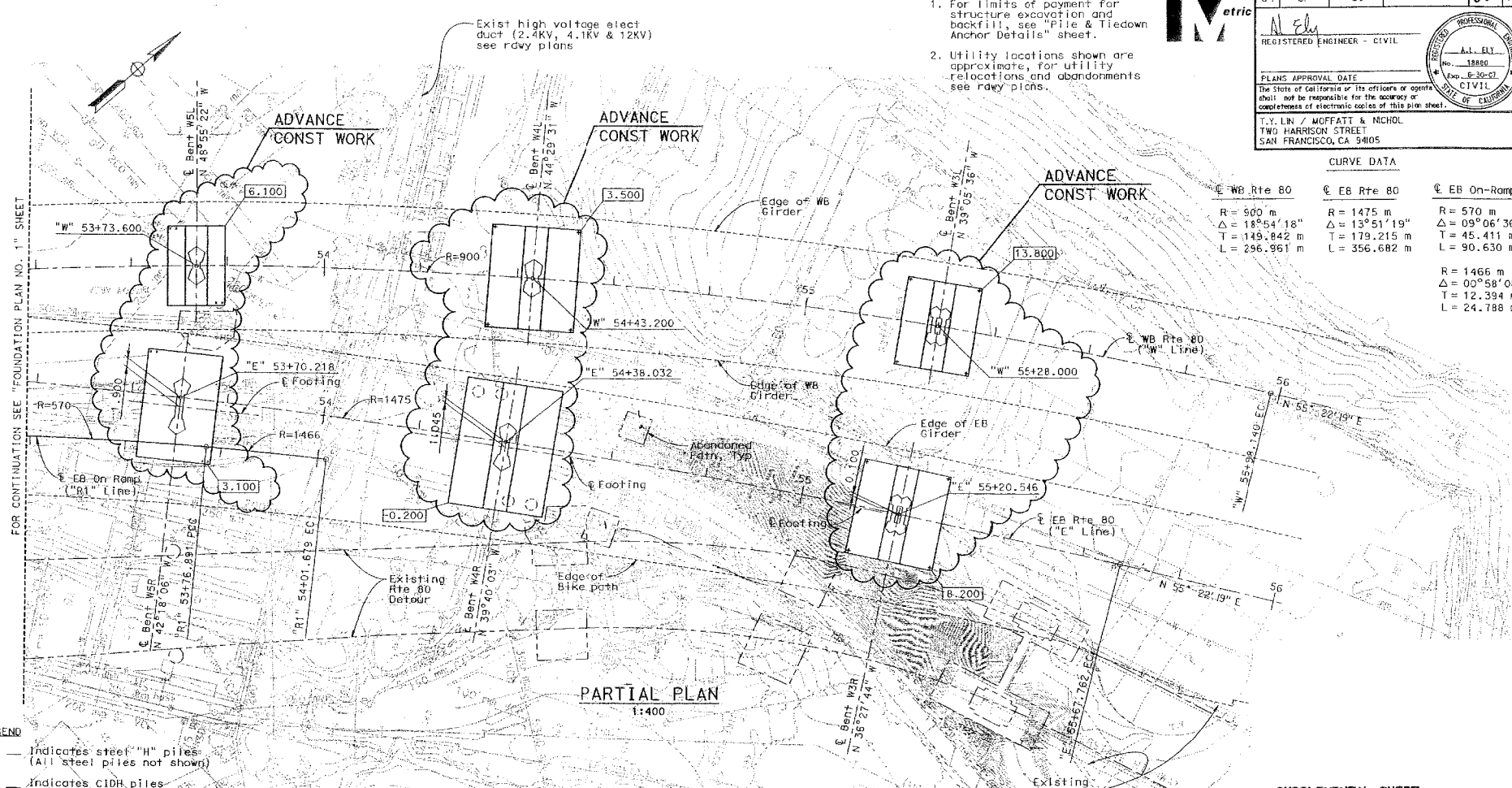

PARTIAL PLAN
1:400

CURVE DATA

℄ WB Rte 80	℄ EB Rte 80	℄ EB On-Ramp
R = 900 m	R = 1475 m	R = 570 m
Δ = 18°54'18"	Δ = 13°51'19"	Δ = 09°06'36"
T = 149.842 m	T = 179.215 m	T = 45.411 m
L = 296.961 m	L = 356.682 m	L = 90.630 m
		R = 1466 m
		Δ = 00°58'08"
		T = 12.394 m
		L = 24.788 m

LEGEND

- H — Indicates steel "H" piles (All steel piles not shown)
- ○ — Indicates CIDH piles (All CIDH piles not shown)
- + — Indicates tiedown anchors (All tiedown anchors not shown)
- ▭ — Denotes bottom of footing elevation
- - - - - Denotes existing structure

Note: Work shown in addition to that designated as "Advance Const Work" is for informational purposes only.

SUPPLEMENTAL SHEET
CONTRACT CHANGE ORDER NO. 73
SHEET 204 OF 220

ALL DIMENSIONS ARE IN METERS UNLESS OTHERWISE SHOWN

SAN FRANCISCO OAKLAND BAY BRIDGE
EAST SPAN SEISMIC SAFETY PROJECT

YBI TRANSITION STRUCTURES

ADVANCE CONST PACKAGE NO.1R2

FOUNDATION PLAN NO.2

DESIGN OVERSIGHT: JOHN MOOK, BERNARD CHAN, JUAN F. CARPIO	SCALE:	VERT.DATUM NGVD 29	HORZ.DATUM NAD 83	DESIGN BY Desai	CHECKED Jain
	PHOTOGRAMMETRY AS OF:		ALIGNMENT TIES	DETAILS BY Van Ryn/Zucchi/Mai	CHECKED Jain
	SURVEYED BY		DRAFTED BY	QUANTITIES BY Liao	CHECKED E. Nichol
SIGN OFF DATE	FIELD CHECKED BY		CHECKED BY		

PREPARED FOR THE STATE OF CALIFORNIA DEPARTMENT OF TRANSPORTATION

Jal Birdy
PROJECT ENGINEER

BRIDGE NO. 34-0006 L/R
KILOMETER POST 12.8

Rev. Date: 5-18-96

ORIGINAL SCALE IN MILLIMETERS FOR REDUCED PLANS 0 10 20 30 40 50 60 70 80 90 100

CU 04251
EA 0120S1

DISREGARD PRINTS BEARING EARLIER REVISION DATES

REVISION DATES (PRELIMINARY STAGE ONLY) 11/24/06 11/27/06 11/29/06 3/26/07 5/29/07 7/24/07 7/26/07 9/26/07 10/31/07 11/30/07

SHEET 4 OF 65

FILE => k:\4141-06\CADD\TS\Final Const\Adv Const Pkg 1R2\ecfnp02.dgn

USERNAME => fsamson DATE PLOTTED => 11/29/2006 TIME PLOTTED => 3:22:13 PM

GEOTECHNICAL/PROFESSIONAL APPROVAL DATE

Nov 29, 2006

TRANSITION STRUCTURES				
Location	Hazardous (Type H)		Hazardous Class 11 (Petroleum contamination)	
	D1 (m)	D2 (m)	D1 (m)	D2 (m)
WESTBOUND				
Bent W6L			10.0	14.0
Bent W5L			9.0	13.0
Bent W4L	0.0	0.6		
EASTBOUND				
Bent W6R(N)			10.0	14.0
Bent W6R(S)	0.0	0.6	10.0	14.0
Bent W5R	0.0	0.9	9.0	13.0
Bent W4R	0.0	0.6	7.0	11.0

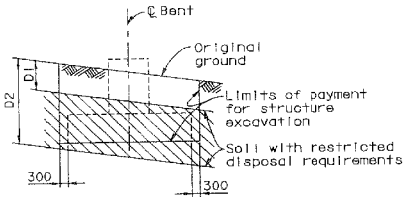

Note:
N - Indicates North footing
S - Indicates South footing

LIMITS OF PAYMENT FOR STRUCTURE EXCAVATION WITH RESTRICTED DISPOSAL

For details not shown see A62C
NO SCALE

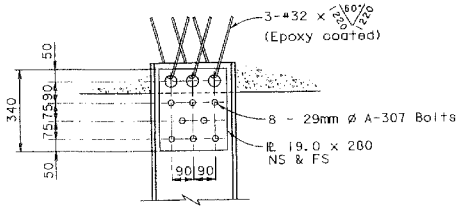

OPTIONAL PILE ANCHORAGE ⚠

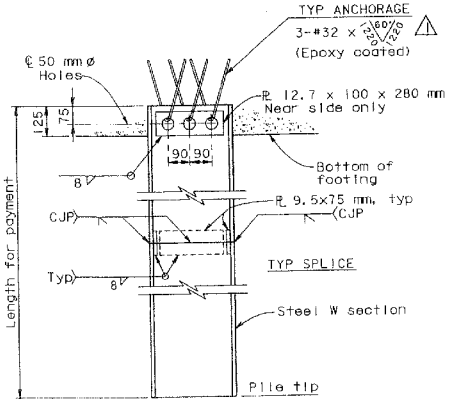

TYPICAL STEEL PILE DETAIL

1:10

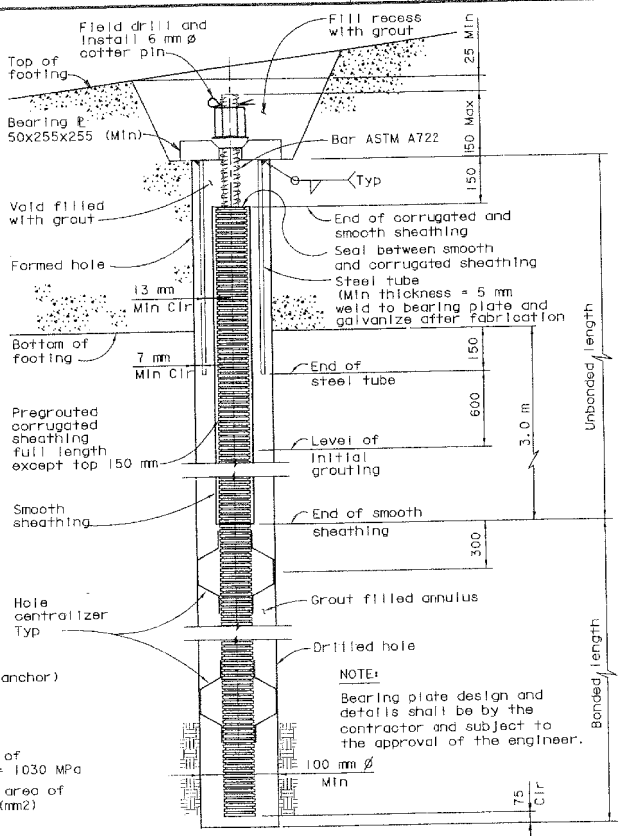

TIEDOWN ANCHOR STRESSING NOTES:

T = 525 kN (Design force of anchor)

As = 1.5 x T / 0.75 Fpu

Bar = ASTM designation A722

Fpu = Ultimate tensile stress of prestressing steel bar = 1030 MPa

As = Minimum cross-sectional area of prestressing steel bar (mm2)

Lockoff force = 100% T

TIEDOWN ANCHOR DETAIL

No scale

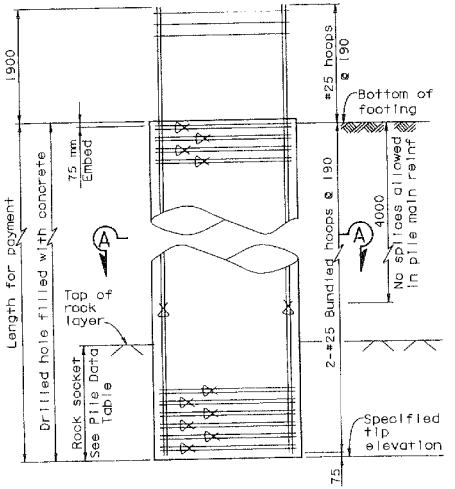

2400mm CIDH PILE DETAIL

1:40

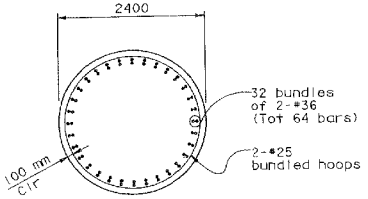

SECTION A-A

1:40

NOTES:

1. Concrete for CIDH piles shall have a minimum 28 day compressive strength (F'c) of 25 MPa
2. For hoop splice detail, see 'Bent W6L Details No. 1' sheet.
3. ⋈ Indicates bundled bars

MARK	DATE	DESCRIPTIONS	BY	CH'D
		REVISIONS		
1		Deleted reference to pile size		
2		Added Optional Anchorage		

SUPPLEMENTAL SHEET
CONTRACT NO. 04-0120E4
CONTRACT CHANGE ORDER NO. 93
SHEET 220 OF 2280

ALL DIMENSIONS ARE IN MILLIMETERS UNLESS OTHERWISE SHOWN

DIST.	COUNTY	ROUTE	KILOMETER POST TOTAL PROJECT	SHEET NO.	TOTAL SHEETS
04	SF	80		601	1187

REGISTERED ENGINEER - CIVIL
A.L. ELY No. 18860 Exp. 6-30-07 CIVIL
PLANS APPROVAL DATE
The State of California or its officers or agents shall not be responsible for the accuracy or completeness of electronic copies of this plan sheet.

T.Y. LIN / MOFFATT & NICHOL
TWO HARRISON STREET
SAN FRANCISCO, CA 94105

DESIGN OVERSIGHT
JOHN MOOK, BERNARD CHAN, JUAN F. CARPIO
SIGN OFF DATE
Rev. Dates 5-16-98

	BY	CHECKED
DESIGN	Desai	Jain
DETAILS	van Ryn/Zucchi/Mai	Jain
QUANTITIES	Liao	E. Nionol

PREPARED FOR THE STATE OF CALIFORNIA DEPARTMENT OF TRANSPORTATION

Jai Birdy
PROJECT ENGINEER

BRIDGE NO. 34-0006 L/R
KILOMETER POST 12.8
CU 04251
EA 0120S1

SAN FRANCISCO OAKLAND BAY BRIDGE
EAST SPAN SEISMIC SAFETY PROJECT
YBI TRANSITION STRUCTURES
ADVANCE CONST PACKAGE NO. IR2
PILE & TIEDOWN ANCHOR DETAILS

DISREGARD PRINTS BEARING EARLIER REVISION DATES
REVISION DATES (SHEET W/MARY STACEL ONLY)
SHEET 581 OF 615

ORIGINAL SCALE IN MILLIMETERS FOR REDUCED PLANS 0 10 20 30 40 50 60 70 80 90 100

FILE: I:\PLANS\PS\CADD\ENS\Final Plans\Adv Const Pkg IR2\ceni1e.dgn

Nov 29, 2006
TIME PLOTTED => 3:28:56 PM

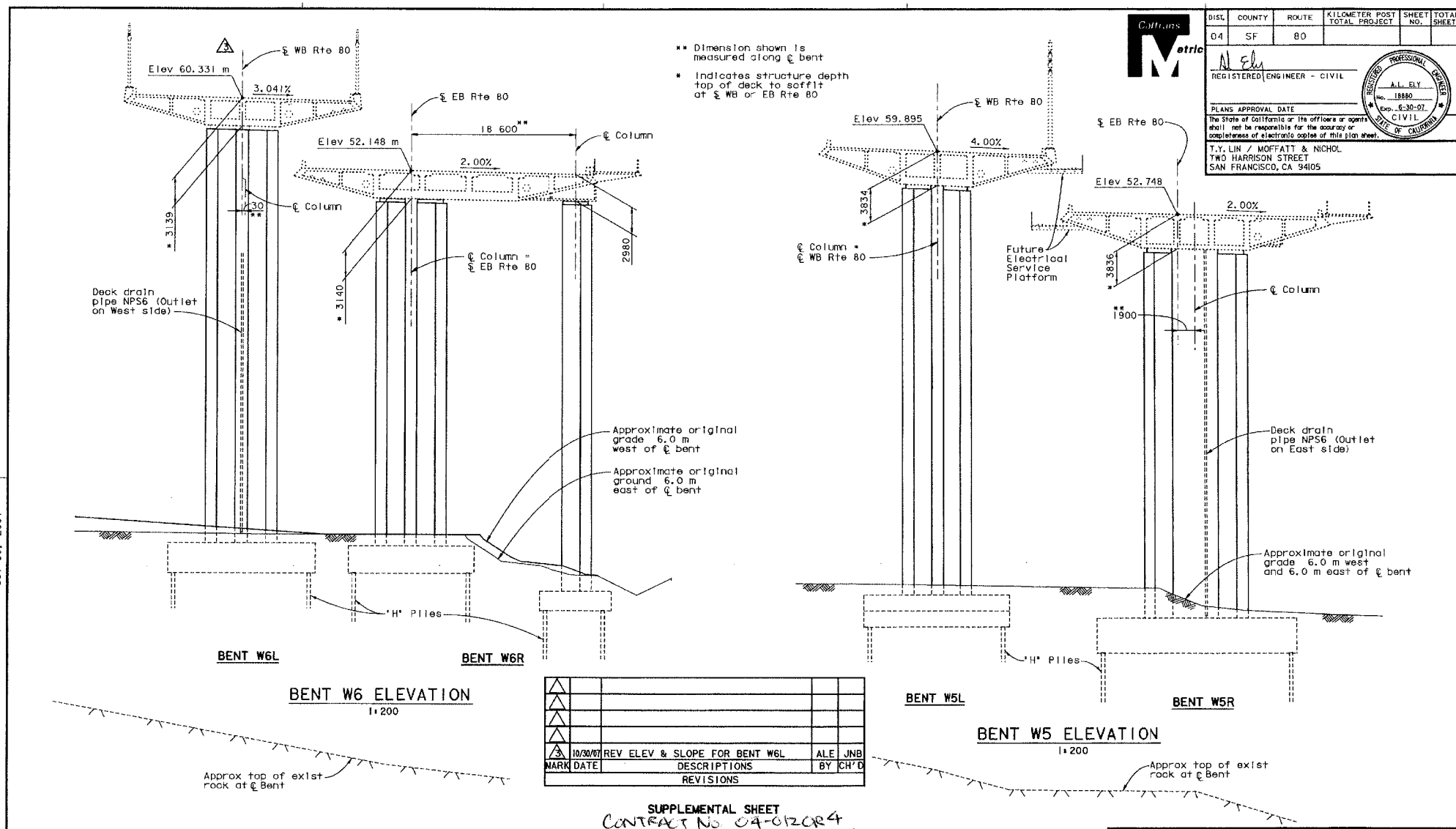

MARK	DATE	DESCRIPTIONS	BY	CH'D
3	10/30/07	REV ELEV & SLOPE FOR BENT W6L	ALE	JNB

REVISIONS

SUPPLEMENTAL SHEET
CONTRACT No. 04-012OR4
CONTRACT CHANGE ORDER NO. 73
SHEET 266 OF 280

ALL DIMENSIONS ARE IN MILLIMETERS UNLESS OTHERWISE SHOWN

DIST.	COUNTY	ROUTE	KILOMETER POST TOTAL PROJECT	SHEET NO.	TOTAL SHEETS
04	SF	80			

REGISTERED ENGINEER - CIVIL
PLANS APPROVAL DATE
The State of California or its officers or agents shall not be responsible for the accuracy or completeness of electronic copies of this plan sheet.
REGISTERED PROFESSIONAL ENGINEER A.L. ELY No. 18880 Exp. 6-30-07 CIVIL STATE OF CALIFORNIA
T.Y. LIN / MOFFATT & NICHOL
TWO HARRISON STREET
SAN FRANCISCO, CA 94105

SAN FRANCISCO OAKLAND BAY BRIDGE
EAST SPAN SEISMIC SAFETY PROJECT
YBI TRANSITION STRUCTURES
ADVANCE CONST PACKAGE NO. 1R2
BENT ELEVATIONS W6 & W5

DESIGN OVERSIGHT
JOHN MOOK, BERNARD CHAN, JUAN F. CARPIO
SIGN OFF DATE
Rev. Date: 5-18-98

	BY	CHECKED
DESIGN	Desai	Jain
DETAILS	van Ryn/Zucchi/Mai	Jain
QUANTITIES	Liao	E. Nichol

PREPARED FOR THE STATE OF CALIFORNIA DEPARTMENT OF TRANSPORTATION
Jai Birdy
PROJECT ENGINEER
BRIDGE NO. 34-0006 L/R
KILOMETER POST 12.8
ORIGINAL SCALE IN MILLIMETERS FOR REDUCED PLANS 0 10 20 30 40 50 60 70 80 90 100
CU 04251
EA 012051
DISREGARD PRINTS BEARING EARLIER REVISION DATES
REVISION DATES (PRELIMINARY STAGE ONLY)
SHEET 6 OF 65
FILE => P:\4141-06\CADD\TS\Final Const\Adv Const Pkg 1R2\Revision 103007\eebnt04elv.dgn
USERNAME => fsamson DATE PLOTTED => 10/30/2007 TIME PLOTTED => 8:58:01 AM
Oct 30, 2007

DIST.	COUNTY	ROUTE	KILOMETER POST TOTAL PROJECT	SHEET NO.	TOTAL SHEETS
04	SF	80		63	137

Caltrans Metric

REGISTERED ENGINEER - CIVIL

PLANS APPROVAL DATE

The State of California or its officers or agents shall not be responsible for the accuracy or completeness of electronic copies of this plan sheet.

REGISTERED PROFESSIONAL ENGINEER A.L. ELY No. 18880 Exp. 6-30-07 CIVIL STATE OF CALIFORNIA

T.Y. LIN / MOFFATT & NICHOL
TWO HARRISON STREET
SAN FRANCISCO, CA 94105

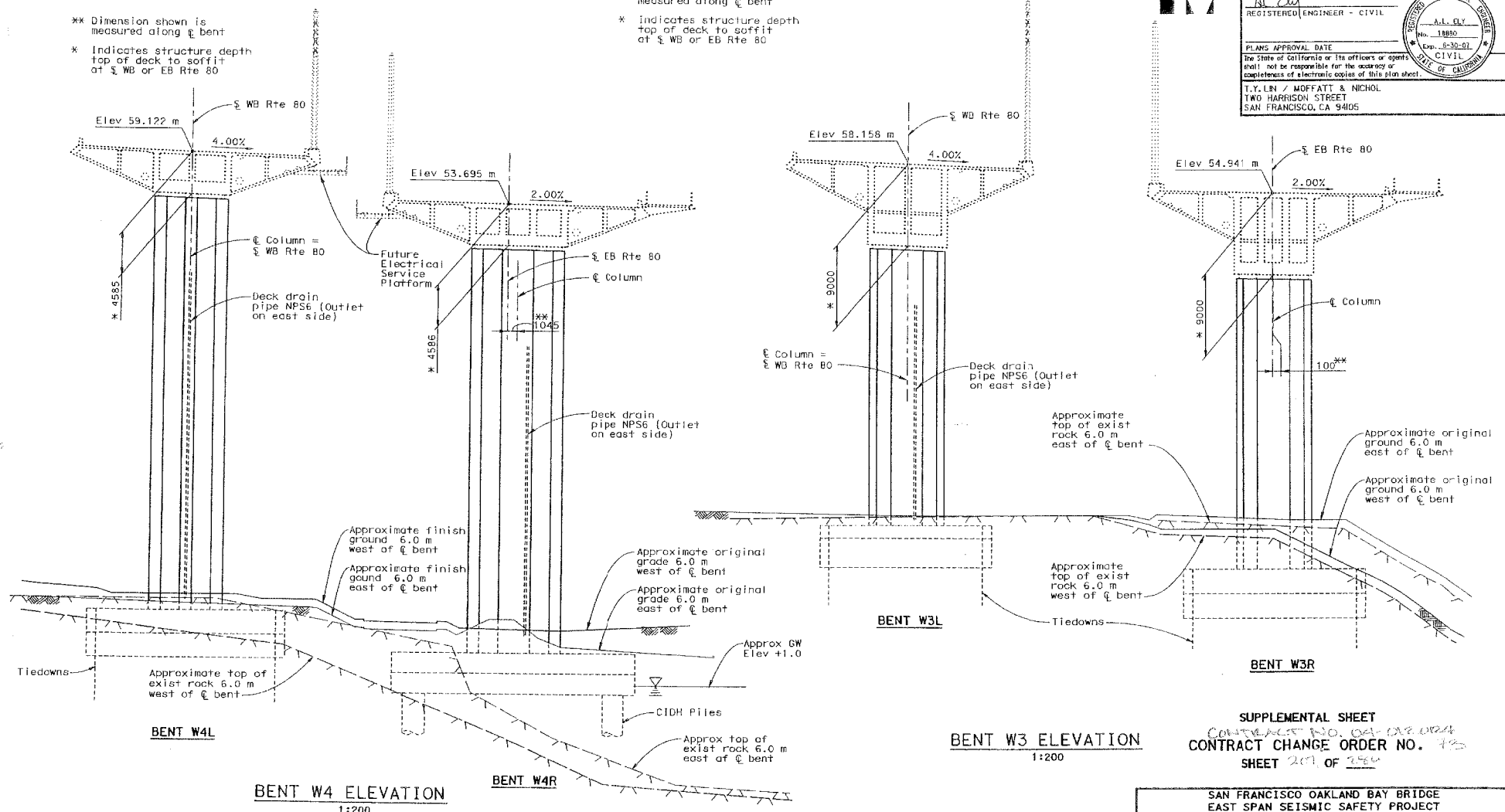

SUPPLEMENTAL SHEET
CONTRACT NO. 04-012024
CONTRACT CHANGE ORDER NO. 73
SHEET 207 OF 286

ALL DIMENSIONS ARE IN MILLIMETERS UNLESS OTHERWISE SHOWN

SAN FRANCISCO OAKLAND BAY BRIDGE
EAST SPAN SEISMIC SAFETY PROJECT

YBI TRANSITION STRUCTURES

ADVANCE CONST PACKAGE NO.1R2

BENT ELEVATIONS W4 & W3

DESIGN OVERSIGHT
JOHN MOOK, BERNARD CHAN, JUAN F. CARPIO
SIGN OFF DATE
Rev. Date: 5-18-98

DESIGN	BY Desai	CHECKED Jain	
DETAILS	BY van Ryn/Zucchi/Wai	CHECKED Jain	
QUANTITIES	BY Liao	CHECKED E. Nichol	

PREPARED FOR THE STATE OF CALIFORNIA DEPARTMENT OF TRANSPORTATION

Jal Birdy
PROJECT ENGINEER

BRIDGE NO. 34-0006 L/R
KILOMETER POST 12.8

ORIGINAL SCALE IN MILLIMETERS FOR REDUCED PLANS 0 10 20 30 40 50 60 70 80 90 100

CU 04251
EA 0120S1

DISREGARD PRINTS BEARING EARLIER REVISION DATES

REVISION DATES (PRELIMINARY STAGE ONLY) 11/01/06 11/02/06 11/03/06 3/01/07 5/01/07 7/01/07 9/01/07 10/01/07 11/01/07

SHEET 7 OF 65

FILE => k:\4141-06\CADD\TS\Final Const\Adv Const Pkg 1R2\eebnt06elv.dgn

USERNAME => fsamson DATE PLOTTED => 11/29/2006 TIME PLOTTED => 3:23:02 PM

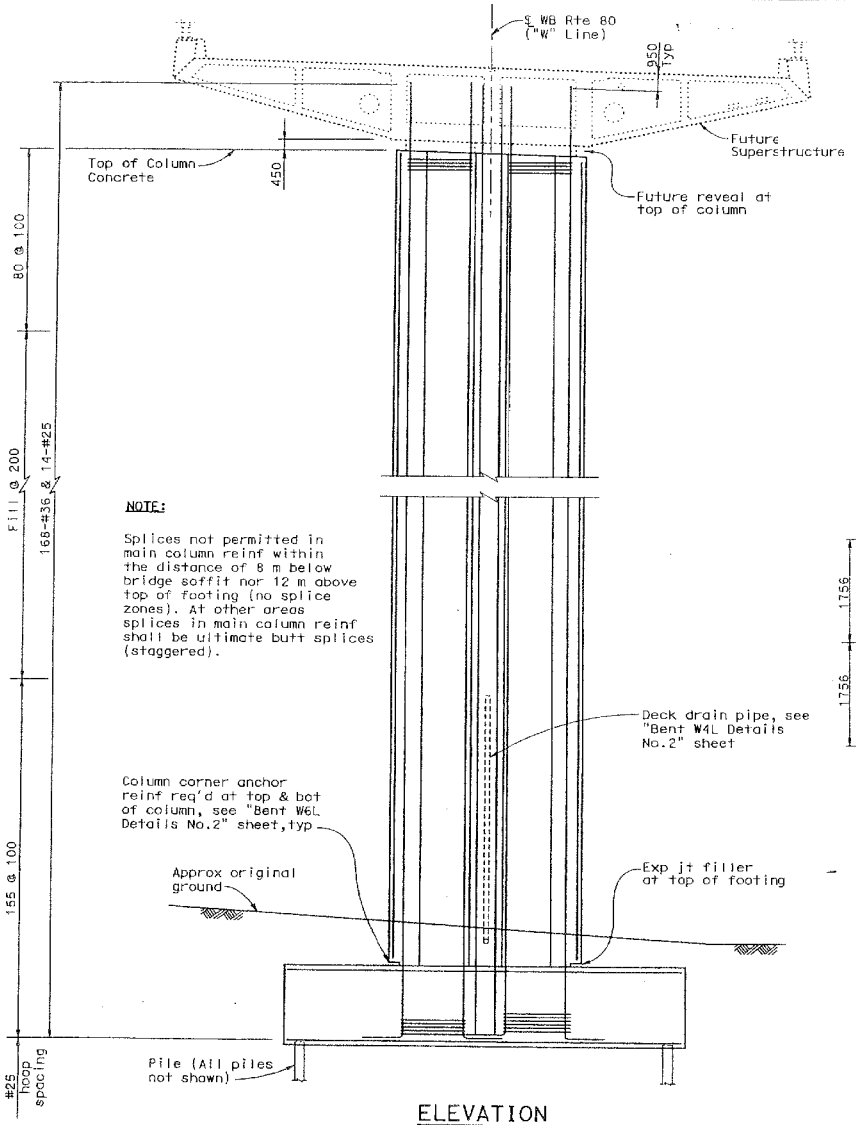

ELEVATION
1:100

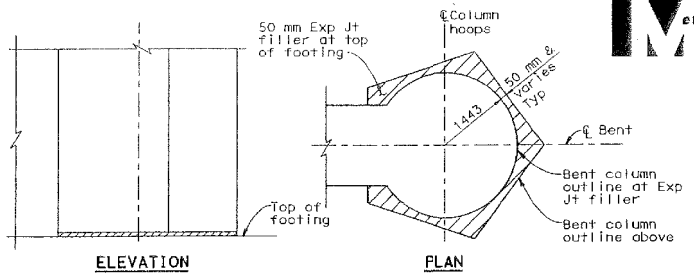

EXPANSION JOINT FILLER AT TOP OF FOOTING
NO SCALE

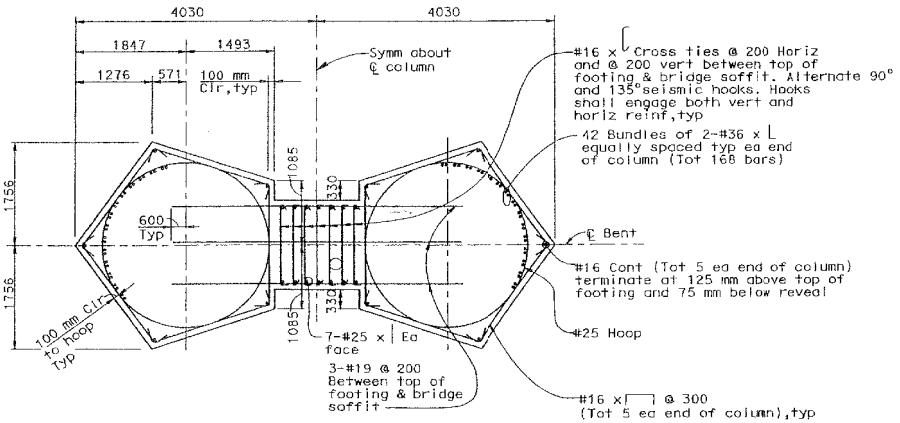

TYPICAL COLUMN SECTION
1:40

SUPPLEMENTAL SHEET
CONTRACT NO. 04-0120S1
CONTRACT CHANGE ORDER NO. 73
SHEET 268 OF 268

ALL DIMENSIONS ARE IN MILLIMETERS UNLESS OTHERWISE SHOWN

DIST.	COUNTY	ROUTE	KILOMETER POST TOTAL PROJECT	SHEET NO.	TOTAL SHEETS
04	SF	80		64	137

REGISTERED ENGINEER - CIVIL
A.L. ELY No. 18880 Exp. 6-30-07 CIVIL
PROFESSIONAL ENGINEER REGISTERED STATE OF CALIFORNIA
PLANS APPROVAL DATE
The State of California or its officers or agents shall not be responsible for the accuracy or completeness of electronic copies of this plan sheet.

T.Y. LIN / MOFFATT & NICHOL
TWO HARRISON STREET
SAN FRANCISCO, CA 94105

DESIGN OVERSIGHT
JOHN MOOK, BERNARD CHAN, JUAN F. CARPIO
SIGN OFF DATE

	BY	CHECKED
DESIGN	Shangkuan	AM
DETAILS	van Ryn/Zucchi/Mai	Jain
QUANTITIES	Liao	E. Nichol

PREPARED FOR THE STATE OF CALIFORNIA DEPARTMENT OF TRANSPORTATION

Jal Birdy
PROJECT ENGINEER

BRIDGE NO. 34-0006 L/R
KILOMETER POST 12.8

CU 04251
EA 012051

SAN FRANCISCO OAKLAND BAY BRIDGE
EAST SPAN SEISMIC SAFETY PROJECT
YBI TRANSITION STRUCTURES
ADVANCE CONST PACKAGE NO.1R2
BENT W6L DETAILS NO.1

DISREGARD PRINTS BEARING EARLIER REVISION DATES →
REVISION DATES (PRELIMINARY STAGE ONLY)
11/20/06 | 11/27/06 | 11/28/06 | 3/26/07 | 5/16/07 | 7/24/07 | 8/24/07 | 10/19/07 | 11/20/07
SHEET 8 OF 65

ORIGINAL SCALE IN MILLIMETERS FOR REQUIRED PLANS 0 10 20 30 40 50 60 70 80 90 100

FILE => k:\4141-06\EADD\TS\Final Const\Adv Const Pkg 1R2\eebnt19det.dgn

USERNAME => fasmith DATE PLOTTED => 11/28/2006 TIME PLOTTED => 3:23:14 PM
Nov 29, 2006

DIST.	COUNTY	ROUTE	KILOMETER POST TOTAL PROJECT	SHEET NO.	TOTAL SHEETS
04	SF	80		65	137

Caltrans Metric

REGISTERED ENGINEER - CIVIL

PLANS APPROVAL DATE

The State of California or its officers or agents shall not be responsible for the accuracy or completeness of electronic copies of this plan sheet.

REGISTERED PROFESSIONAL ENGINEER A.L. ELY No. 18880 Exp. 6-30-07 CIVIL STATE OF CALIFORNIA

T.Y. LIN / MOFFATT & NICHOL
TWO HARRISON STREET
SAN FRANCISCO, CA 94105

Note:
Indicates bundled bars

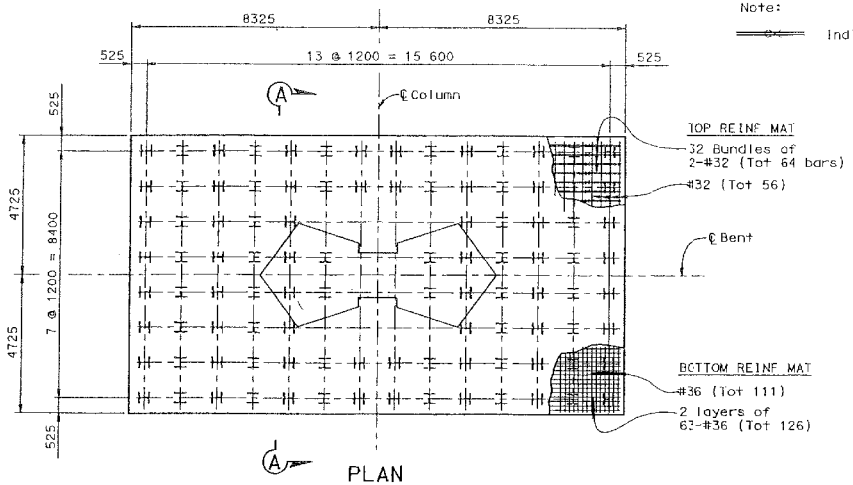

PLAN
(Tot 100 piles)
1:80

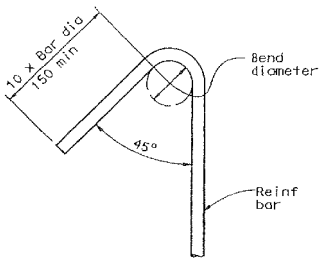

SEISMIC HOOK
No Scale

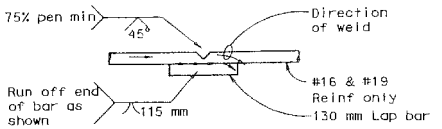

1. Butt weld to be made first
2. Butt weld to be made in flat or horizontal position
3. Lap bar to be centered on splice
4. Flare weld to be made in direction shown
5. Lap bar equal size to spiral bar

VEE GROOVE WELDED SPLICE

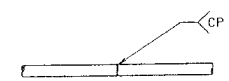

Individual hoops, made continuous with 100% penetration welds, may be substituted for spirals, Hoops shall be same size, spacing, and material as spiral

BUTT WELDED CONTINUOUS HOOP OR SPIRAL

Note: All column spiral and hoop splices shall be ultimate butt splices, see Special Provisions.

COLUMN SPIRAL AND HOOP SPLICE DETAILS
No Scale

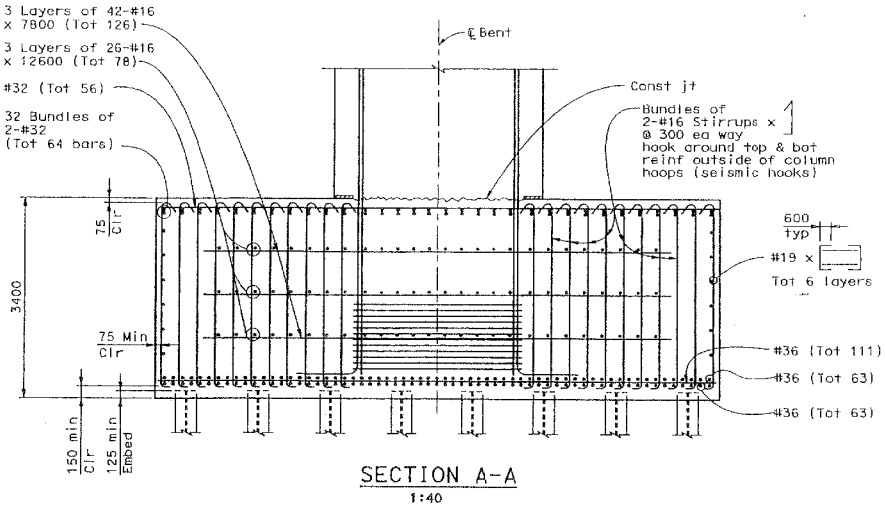

SECTION A-A
1:40

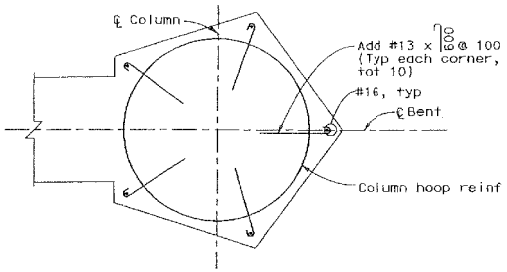

DETAIL B - COLUMN CORNER ANCHOR REINFORCEMENT
(Column corner anchor reinf to be provided in regions within 3000 mm of top of footing)
No Scale

SUPPLEMENTAL SHEET
CONTRACT NO. 04-012084
CONTRACT CHANGE ORDER NO. 73
SHEET 64 OF 680

SAN FRANCISCO OAKLAND BAY BRIDGE
EAST SPAN SEISMIC SAFETY PROJECT

YBI TRANSITION STRUCTURES

ADVANCE CONST PACKAGE NO.1R2

BENT W6L DETAILS NO.2

ALL DIMENSIONS ARE IN MILLIMETERS UNLESS OTHERWISE SHOWN

DESIGN OVERSIGHT
JOHN MOOK, BERNARD CHAN, JUAN F. CARPIO
SIGN OFF DATE
Rev. Date: 5-10-98

DESIGN	BY Dodd	CHECKED Desai	
DETAILS	BY Van Ryn/Zucchi/Mai	CHECKED Jain	
QUANTITIES	BY Liao	CHECKED E. Nichol	

PREPARED FOR THE STATE OF CALIFORNIA DEPARTMENT OF TRANSPORTATION

Jal Birdy
PROJECT ENGINEER

BRIDGE NO. 34-0006 L/R
KILOMETER POST 12.8

CU 04251
EA 012051

DISREGARD PRINTS BEARING EARLIER REVISION DATES

REVISION DATES (PRELIMINARY STAGE ONLY) 11/04/96 11/21/96 11/25/96 3/26/02 5/24/02 7/24/02 1/3/06 3/06/06 10/31/06 11/20/06

SHEET 9 OF 65

ORIGINAL SCALE IN MILLIMETERS FOR REDUCED PLANS 0 10 20 30 40 50 60 70 80 90 100

FILE => k:\4141-06\CADD\TS\Final Const\Adv Const Pkg 1R2\eebnt21oct.dgn

USERNAME => fsamson DATE PLOTTED => 11/29/2006 TIME PLOTTED => 3:23:28 PM

Nov 29, 2006

DIST.	COUNTY	ROUTE	KILOMETER POST TOTAL PROJECT	SHEET NO.	TOTAL SHEETS
04	SF	80		66	137

Caltrans Metric

REGISTERED ENGINEER - CIVIL

PLANS APPROVAL DATE

The State of California or its officers or agents shall not be responsible for the accuracy or completeness of electronic copies of this plan sheet.

REGISTERED PROFESSIONAL ENGINEER A.L. ELY No. 18880 Exp. 6-30-07 CIVIL STATE OF CALIFORNIA

T.Y. LIN / MOFFATT & NICHOL
TWO HARRISON STREET
SAN FRANCISCO, CA 94105

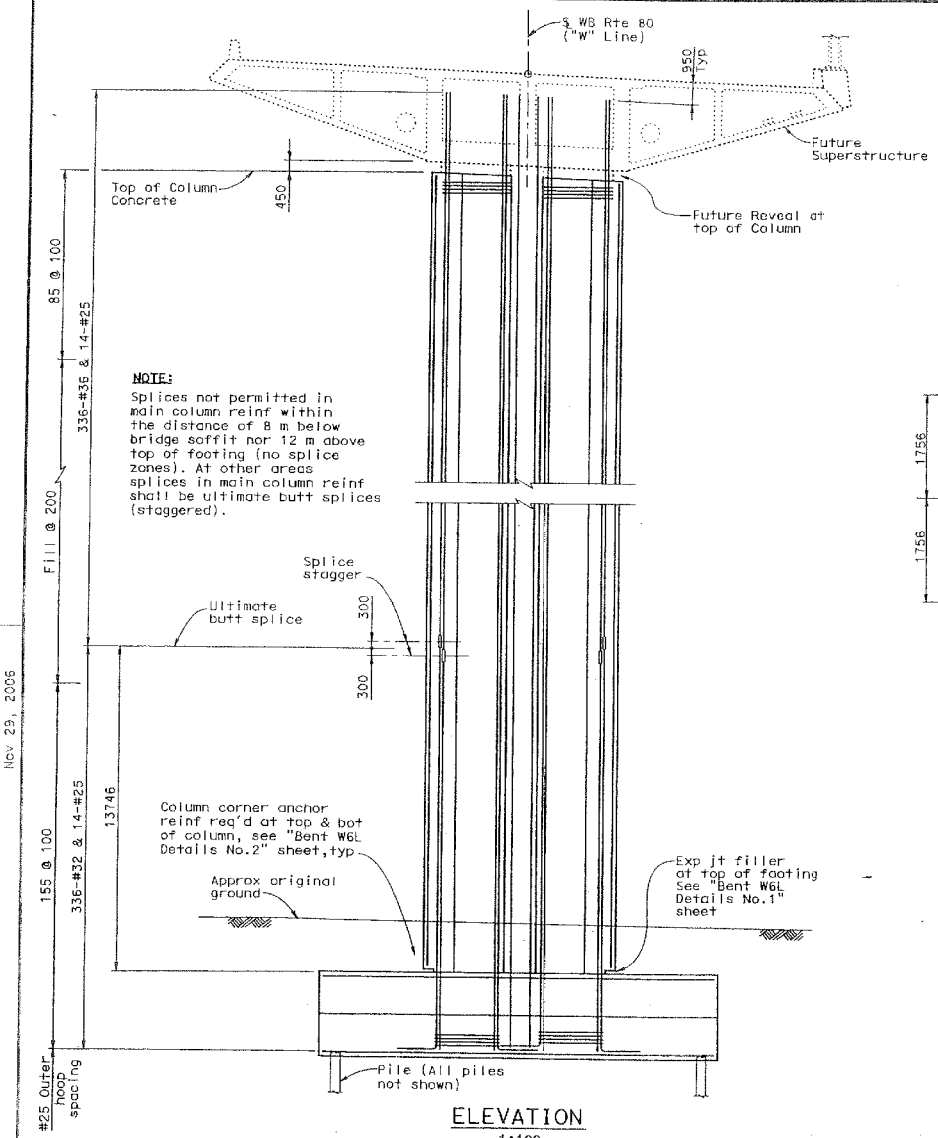

NOTE:
Splices not permitted in main column reinf within the distance of 8 m below bridge soffit nor 12 m above top of footing (no splice zones). At other areas splices in main column reinf shall be ultimate butt splices (staggered).

ELEVATION
1:100

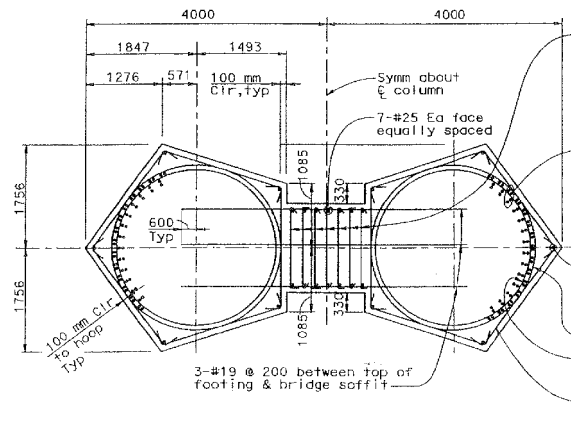

Note: Main column reinf bars are #32 bars at footing spliced to #36 bars which extend into bent cap See elevation.

TYPICAL COLUMN SECTION
1:40

SUPPLEMENTAL SHEET
CONTRACT NO. 04-0120R4
CONTRACT CHANGE ORDER NO. 73
SHEET 210 OF 250

ALL DIMENSIONS ARE IN MILLIMETERS UNLESS OTHERWISE SHOWN

SAN FRANCISCO OAKLAND BAY BRIDGE
EAST SPAN SEISMIC SAFETY PROJECT

YBI TRANSITION STRUCTURES

ADVANCE CONST PACKAGE NO.1R2

BENT W5L DETAILS NO.1

DESIGN OVERSIGHT
JOHN MOOK, BERNARD CHAN, JUAN F. CARPIO
SIGN OFF DATE

DESIGN	BY Darrah/Shankuan	CHECKED Ahn
DETAILS	BY Van Ryn/Zucchi/Kai	CHECKED Jain
QUANTITIES	BY Liao	CHECKED E. Nichol

PREPARED FOR THE STATE OF CALIFORNIA DEPARTMENT OF TRANSPORTATION

Jal Birdy
PROJECT ENGINEER

BRIDGE NO. 34-0006 L/R
KILOMETER POST 12.8

Rev. Date: 5-18-98

ORIGINAL SCALE IN MILLIMETERS FOR REDUCED PLANS 0 10 20 30 40 50 60 70 80 90 100

CU 04251
EA 0120S1

DISREGARD PRINTS BEARING EARLIER REVISION DATES

REVISION DATES (PRELIMINARY STAGE ONLY)

SHEET 10 OF 65

FILE => K:\4141-06\CADD\TS\Final Const\Adv Const Pkg 1R2\eebnt22dst.dgn

Nov 29, 2006

USERNAME => tsamson DATE PLOTTED => 11/29/2006 TIME PLOTTED => 3:23:41 PM

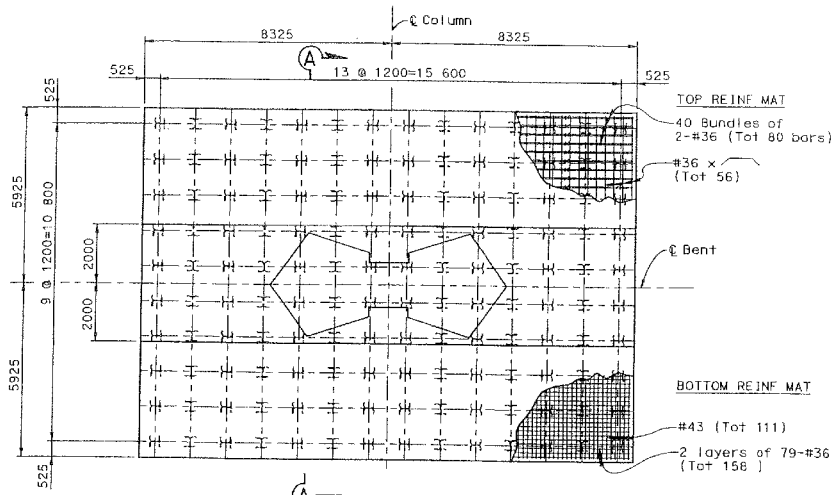

PLAN
(Tot 140 piles)
1:80

NOTE:
Indicates bundled bars

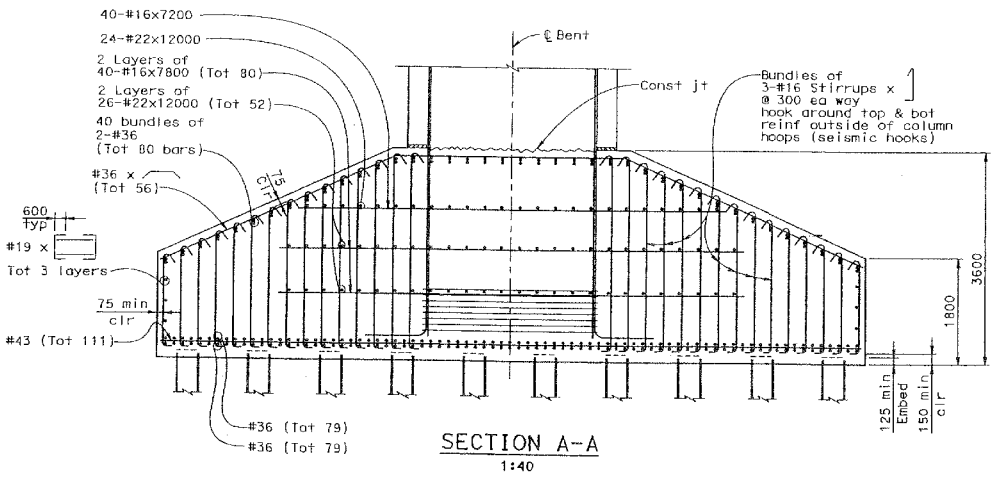

SECTION A-A
1:40

DIST.	COUNTY	ROUTE	KILOMETER POST TOTAL PROJECT	SHEET NO.	TOTAL SHEETS
04	SF	80		67	137

Caltrans Metric

REGISTERED ENGINEER - CIVIL

PLANS APPROVAL DATE

The State of California or its officers or agents shall not be responsible for the accuracy or completeness of electronic copies of this plan sheet.

REGISTERED PROFESSIONAL ENGINEER A.L. ELY No. 13880 Exp. 6-30-07 CIVIL STATE OF CALIFORNIA

T.Y. LIN / MOFFATT & NICHOL
TWO HARRISON STREET
SAN FRANCISCO, CA 94105

SUPPLEMENTAL SHEET
CONTRACT NO. 04-012084
CONTRACT CHANGE ORDER NO. 73
SHEET 211 OF 282

ALL DIMENSIONS ARE IN MILLIMETERS UNLESS OTHERWISE SHOWN

SAN FRANCISCO OAKLAND BAY BRIDGE
EAST SPAN SEISMIC SAFETY PROJECT

YBI TRANSITION STRUCTURES

ADVANCE CONST PACKAGE NO.1R2

BENT W5L DETAILS NO.2

DESIGN OVERSIGHT
JOHN MOOK, BERNARD CHAN, JUAN F. CARPIO

SIGN OFF DATE

Rev. Date: 5-18-98

DESIGN	BY Dodd	CHECKED Desai	
DETAILS	BY van Ryn/Zucchi/Mai	CHECKED Jain	
QUANTITIES	BY Liao	CHECKED E. Nichol	

PREPARED FOR THE STATE OF CALIFORNIA DEPARTMENT OF TRANSPORTATION

Jal Birdy
PROJECT ENGINEER

BRIDGE NO. 34-0006 L/R
KILOMETER POST 12.8

ORIGINAL SCALE IN MILLIMETERS FOR REDUCED PLANS 0 10 20 30 40 50 60 70 80 90 100

CU 04251
EA 012051

DISREGARD PRINTS BEARING EARLIER REVISION DATES

REVISION DATES (PRELIMINARY STAGE ONLY)

SHEET 11 OF 65

FILE => K:\4141-06\CADD\TS\Final Const\Adv Const Pkg 1R2\eebnt24det.dgn

USERNAME => tsamson DATE PLOTTED => 11/29/2006 TIME PLOTTED => 3:23:52 PM

Nov 29, 2006

DIST	COUNTY	ROUTE	KILOMETER POST TOTAL PROJECT	SHEET NO.	TOTAL SHEETS
04	SF	80		68	137

Caltrans Metric

REGISTERED ENGINEER - CIVIL

PLANS APPROVAL DATE

The State of California or its officers or agents shall not be responsible for the accuracy or completeness of electronic copies of this plan sheet.

REGISTERED PROFESSIONAL ENGINEER A.L. ELY No. 18880 Exp. 6-30-07 CIVIL STATE OF CALIFORNIA

T.Y. LIN / MOFFATT & NICHOL
TWO HARRISON STREET
SAN FRANCISCO, CA 94105

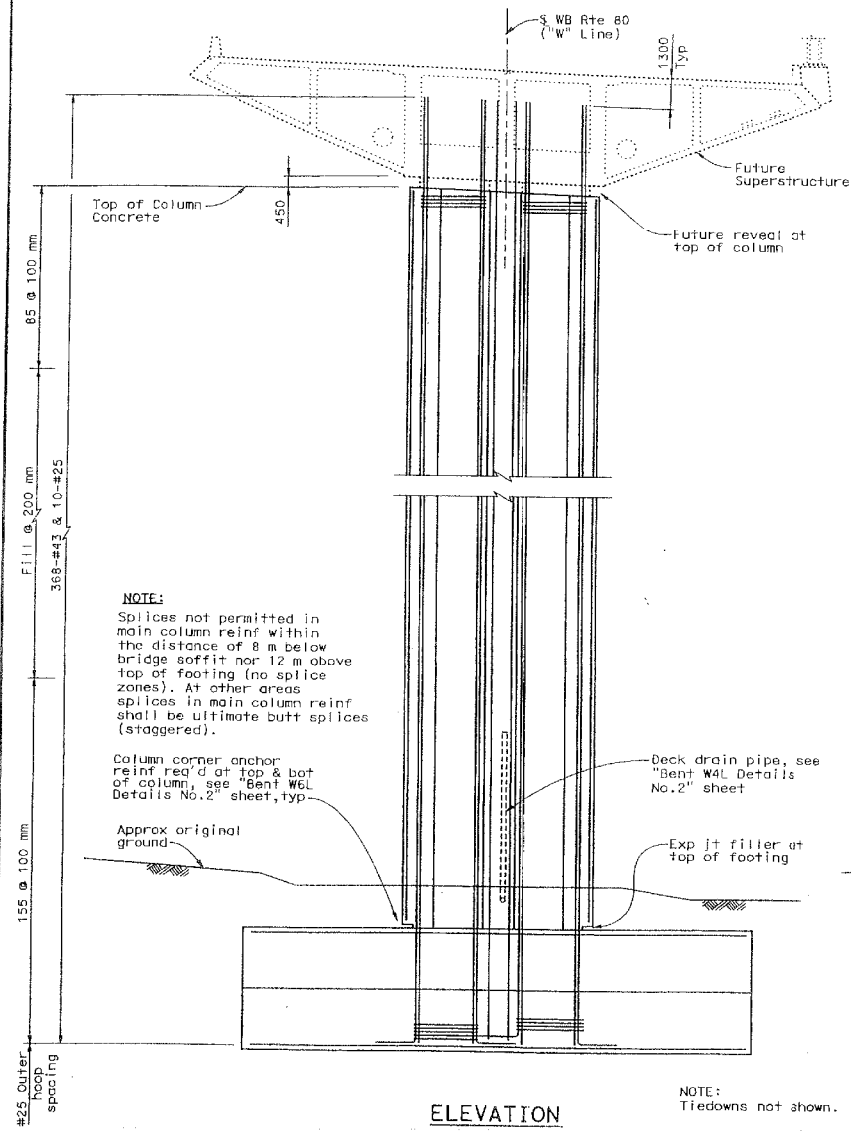

NOTE:
Splices not permitted in main column reinf within the distance of 8 m below bridge soffit nor 12 m above top of footing (no splice zones). At other areas splices in main column reinf shall be ultimate butt splices (staggered).

ELEVATION
1:100

NOTE:
Tiedowns not shown.

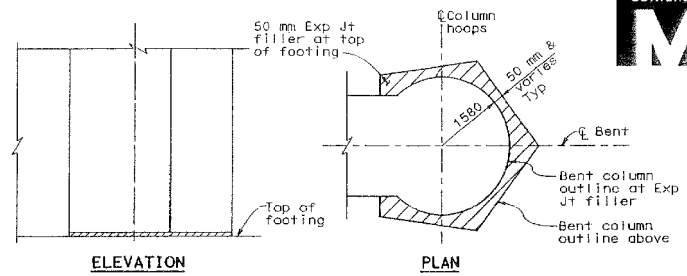

EXPANSION JOINT FILLER AT TOP OF FOOTING
NO SCALE

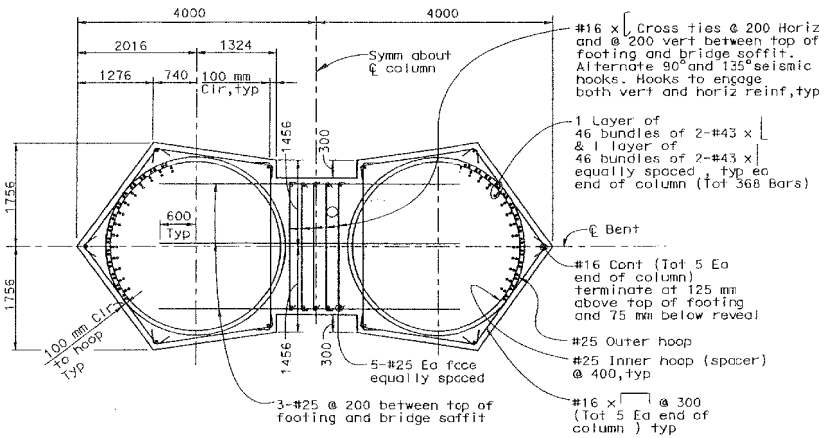

TYPICAL COLUMN SECTION
1:40

SUPPLEMENTAL SHEET
CONTRACT NO. 04-0120R4
CONTRACT CHANGE ORDER NO. 73
SHEET 212 OF 260

ALL DIMENSIONS ARE IN MILLIMETERS UNLESS OTHERWISE SHOWN

SAN FRANCISCO OAKLAND BAY BRIDGE
EAST SPAN SEISMIC SAFETY PROJECT

YBI TRANSITION STRUCTURES

ADVANCE CONST PACKAGE NO.1R2

BENT W4L DETAILS NO.1

DESIGN OVERSIGHT
JOHN MOOK, BERNARD CHAN, JUAN F. CARPIO
SIGN OFF DATE

	BY	CHECKED
DESIGN	Darrah/Shangkuan	Ahn
DETAILS	van Ryn/Zucchi/Wai	Jain
QUANTITIES	Liao	E. Nichol

PREPARED FOR THE STATE OF CALIFORNIA DEPARTMENT OF TRANSPORTATION

Jal Birdy
PROJECT ENGINEER

BRIDGE NO. 34-0006 L/R
KILOMETER POST 12.8

Rev. Date: 5-16-96

ORIGINAL SCALE IN MILLIMETERS FOR REDUCED PLANS 0 10 20 30 40 50 60 70 80 90 100

CU 04251
EA 012051

DISREGARD PRINTS BEARING EARLIER REVISION DATES

REVISION DATES (PRELIMINARY STAGE ONLY)

SHEET 12 OF 65

FILE => K:\4141-06\CADD\TS\Final Const\Adv Const Pkg 1R2\eebnt25det.dgn

Nov 29, 2006

USERNAME => fcamson DATE PLOTTED => 11/29/2006 TIME PLOTTED => 3:24:04 PM

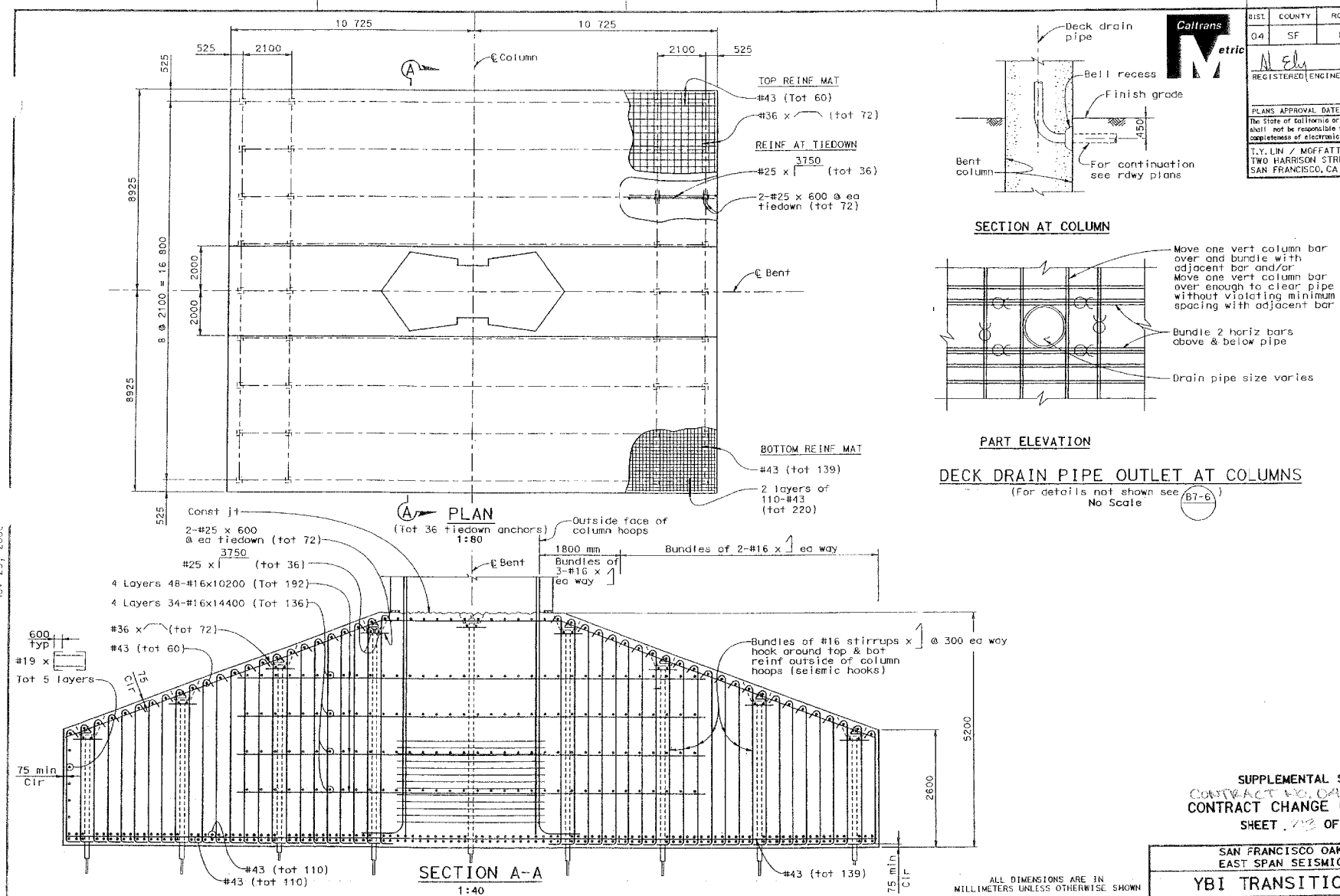

PLAN
(Tot 36 tiedown anchors)
1:80

SECTION AT COLUMN

PART ELEVATION

DECK DRAIN PIPE OUTLET AT COLUMNS
(For details not shown see B7-6)
No Scale

SECTION A-A
1:40

ALL DIMENSIONS ARE IN MILLIMETERS UNLESS OTHERWISE SHOWN

DIST.	COUNTY	ROUTE	KILOMETER POST TOTAL PROJECT	SHEET NO.	TOTAL SHEETS
04	SF	80		69	137

Caltrans Metric

REGISTERED ENGINEER - CIVIL

PLANS APPROVAL DATE

The State of California or its officers or agents shall not be responsible for the accuracy or completeness of electronic copies of this plan sheet.

REGISTERED PROFESSIONAL ENGINEER A.L. ELY No. 18880 Exp. 6-30-07 CIVIL STATE OF CALIFORNIA

T.Y. LIN / MOFFATT & NICHOL
TWO HARRISON STREET
SAN FRANCISCO, CA 94105

SUPPLEMENTAL SHEET
CONTRACT NO. 04-0120R4
CONTRACT CHANGE ORDER NO. 73
SHEET 73 OF 280

SAN FRANCISCO OAKLAND BAY BRIDGE
EAST SPAN SEISMIC SAFETY PROJECT

YBI TRANSITION STRUCTURES

ADVANCE CONST PACKAGE NO.1R2

BENT W4L DETAILS NO.2

DESIGN OVERSIGHT
JOHN MOOK, BERNARD CHAN, JUAN F. CARPIO
SIGN OFF DATE

DESIGN	BY Dodd	CHECKED Desai	
DETAILS	BY van Ryn/Zucchi/Wai	CHECKED Jain	
QUANTITIES	BY Liao	CHECKED E. Nichol	

PREPARED FOR THE STATE OF CALIFORNIA DEPARTMENT OF TRANSPORTATION

Jai Birdy
PROJECT ENGINEER

BRIDGE NO. 34-0006 L/R
KILOMETER POST 12.8

CU 04251
EA 0120S1

DISREGARD PRINTS BEARING EARLIER REVISION DATES

REVISION DATES (PRELIMINARY STAGE ONLY) 11/17/06 11/27/06 11/29/06 3/30/02 5/06/02 2/14/03 1/9/06 1/17/06 10/31/06 11/06/06

SHEET 13 OF 65

Rev. Date: 5-11-96

ORIGINAL SCALE IN MILLIMETERS FOR REDUCED PLANS 0 10 20 30 40 50 60 70 80 90 100

FILE => k:\4141-06\CADD\TS\Final Const\Adv Const Pkg 1R2\eebnt27det.dgn

USERNAME => tkamson DATE PLOTTED => 11/29/2006 TIME PLOTTED => 3:24:16 PM

NOV 29, 2006

DIST	COUNTY	ROUTE	KILOMETER POST TOTAL PROJECT	SHEET NO.	TOTAL SHEETS
04	SF	80		70	137

Caltrans Metric

REGISTERED ENGINEER - CIVIL

PLANS APPROVAL DATE

The State of California or its officers or agents shall not be responsible for the accuracy or completeness of electronic copies of this plan sheet.

REGISTERED PROFESSIONAL ENGINEER A.L. ELY No. 18880 Exp. 6-30-07 CIVIL STATE OF CALIFORNIA

T.Y. LIN / MOFFATT & NICHOL
TWO HARRISON STREET
SAN FRANCISCO, CA 94105

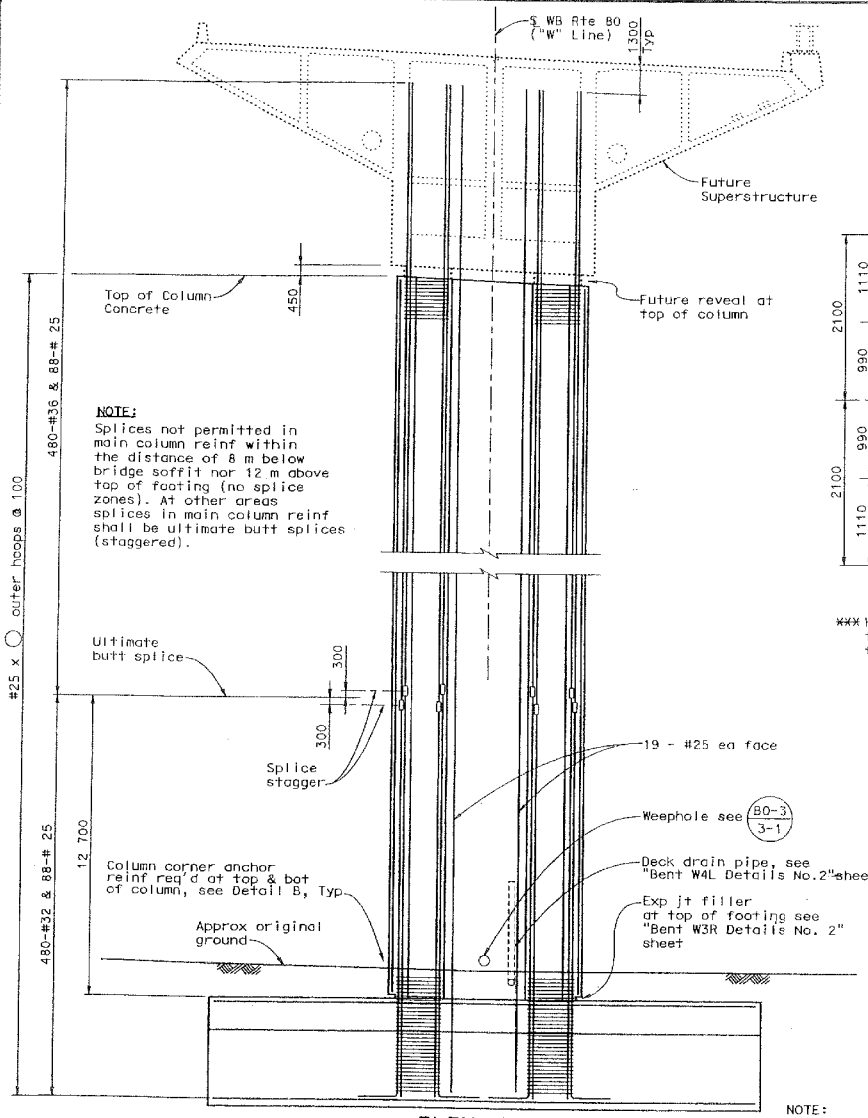

NOTE:
Splices not permitted in main column reinf within the distance of 8 m below bridge soffit nor 12 m above top of footing (no splice zones). At other areas splices in main column reinf shall be ultimate butt splices (staggered).

ELEVATION
1:100

NOTE:
Tiedowns not shown.

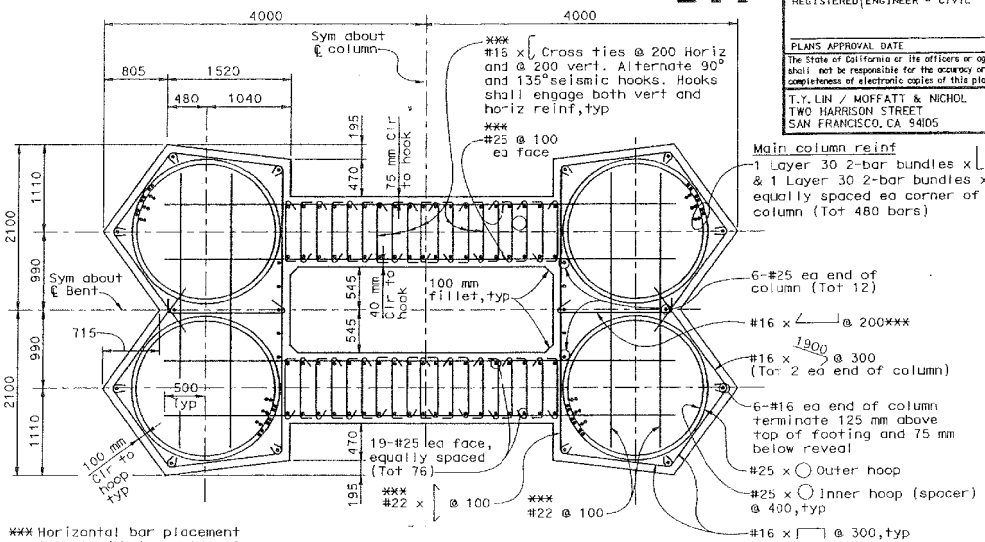

*** Horizontal bar placement to extend between top of footing and bridge soffit.

TYPICAL COLUMN SECTION
1:30

Note:
"Main Column Reinf" bars are #32 bars at footing spliced to #36 bars which extend into bent cap, see elevation.

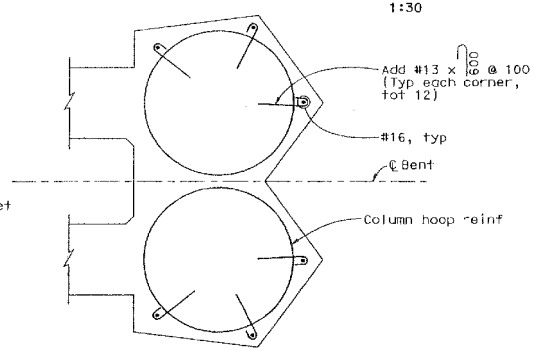

DETAIL B - COLUMN CORNER ANCHOR REINFORCEMENT
(Column corner anchor reinf to be provided in regions within 3000 mm of bridge soffit or top of footing)
No Scale

ALL DIMENSIONS ARE IN MILLIMETERS UNLESS OTHERWISE SHOWN

SUPPLEMENTAL SHEET
CONTRACT NO. 04-0120R4
CONTRACT CHANGE ORDER NO. 73
SHEET 214 OF 280

SAN FRANCISCO OAKLAND BAY BRIDGE
EAST SPAN SEISMIC SAFETY PROJECT
YBI TRANSITION STRUCTURES
ADVANCE CONST PACKAGE NO.1R2
BENT W3L DETAILS NO.1

DESIGN OVERSIGHT
JOHN MOOK, BERNARD CHAN, JUAN F. CARPIO
SIGN OFF DATE
Rev. Date: 5-18-98

	BY	CHECKED
DESIGN	Darrah/Shangkuan	Ahn
DETAILS	van Ryn/Zucchi/Mai	Jain
QUANTITIES	Liao	E. Nichol

PREPARED FOR THE STATE OF CALIFORNIA DEPARTMENT OF TRANSPORTATION

Jal Birdy
PROJECT ENGINEER

BRIDGE NO. 34-0006 L/R
KILOMETER POST 12.8

ORIGINAL SCALE IN MILLIMETERS FOR REDUCED PLANS 0 10 20 30 40 50 60 70 80 90 100

CU 04251
EA 012051

DISREGARD PRINTS BEARING EARLIER REVISION DATES

REVISION DATES (PRELIMINARY STAGE ONLY) 11/14/06 11/21/06 11/29/06 3/26/02 5/30/02 2/21/03 3/2/06 8/24/06 10/24/06 11/10/06

SHEET 14 OF 65

FILE => k:\4141-06\CADD\TS\Final Const\Adv Const Pkg 1R2\eebnt28oel.dgn

USERNAME => fsamson DATE PLOTTED => 11/29/2006 TIME PLOTTED => 3:24:29 PM

Nov 29, 2006

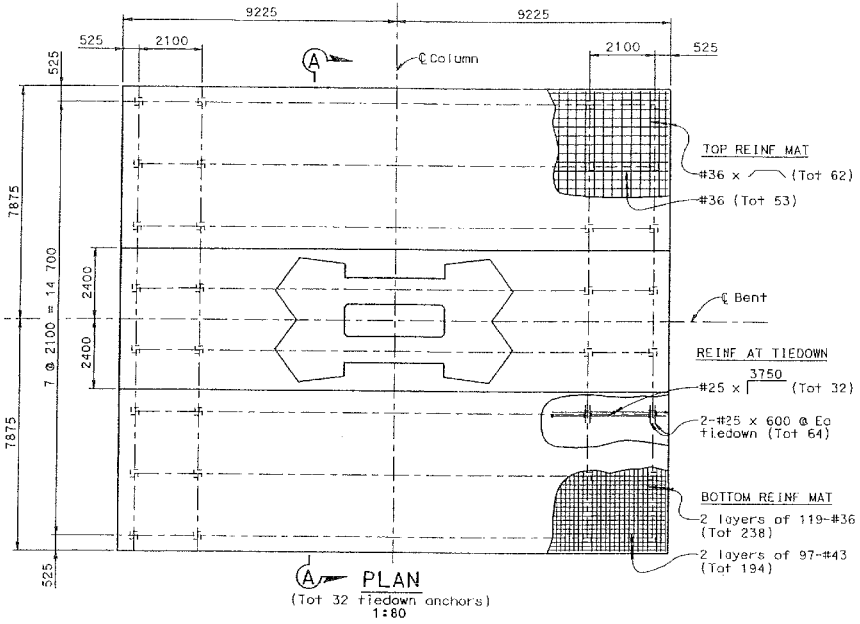

PLAN
(Tot 32 tiedown anchors)
1:80

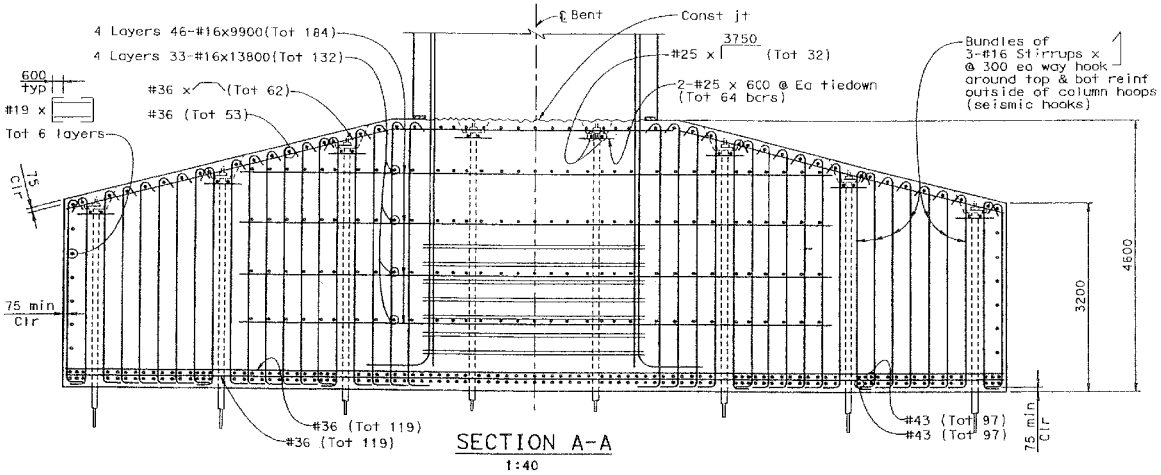

SECTION A-A
1:40

DIST.	COUNTY	ROUTE	KILOMETER POST TOTAL PROJECT	SHEET NO.	TOTAL SHEETS
04	SF	80		71	137

Caltrans Metric

REGISTERED ENGINEER - CIVIL

PLANS APPROVAL DATE

The State of California or its officers or agents shall not be responsible for the accuracy or completeness of electronic copies of this plan sheet.

REGISTERED PROFESSIONAL ENGINEER A.L. ELY No. 18830 Exp. 6-30-07 CIVIL STATE OF CALIFORNIA

T.Y. LIN / MOFFATT & NICHOL
TWO HARRISON STREET
SAN FRANCISCO, CA 94105

SUPPLEMENTAL SHEET
CONTRACT NO. 04-0120R4
CONTRACT CHANGE ORDER NO. 73
SHEET 215 OF 290

ALL DIMENSIONS ARE IN MILLIMETERS UNLESS OTHERWISE SHOWN

SAN FRANCISCO OAKLAND BAY BRIDGE
EAST SPAN SEISMIC SAFETY PROJECT

YBI TRANSITION STRUCTURES

ADVANCE CONST PACKAGE NO.1R2

BENT W3L DETAILS NO.2

DESIGN OVERSIGHT
JOHN MOOK, BERNARD CHAN, JUAN F. CARPIO
SIGN OFF DATE

DESIGN	BY Dadd	CHECKED Desai	
DETAILS	BY van Ryn/Zucchi/Mai	CHECKED Jain	
QUANTITIES	BY Liao	CHECKED E. Nichol	

PREPARED FOR THE STATE OF CALIFORNIA DEPARTMENT OF TRANSPORTATION

Jal Birdy
PROJECT ENGINEER

BRIDGE NO. 34-0006 L/R
KILOMETER POST 12.8

Rev. Date: 5-8-98

ORIGINAL SCALE IN MILLIMETERS FOR REDUCED PLANS 0 10 20 30 40 50 60 70 80 90 100

CU 04251
EA 0120S1

DISREGARD PRINTS BEARING EARLIER REVISION DATES

REVISION DATES (PRELIMINARY STATE ONLY) 11/14/04 11/21/06 11/29/06 3/30/02 5/30/02 7/14/03 7/30/06 9/30/06 10/04/06 11/20/06

SHEET 15 OF 65

FILE => K:\4141-06\CADD\IS\Final Const\Adv Const Pkg 1R2\eebnt30det.dgn

USERNAME => fsamson DATE PLOTTED => 11/29/2006 TIME PLOTTED => 3:24:43 PM

NOV 29, 2006

DIST.	COUNTY	ROUTE	KILOMETER POST TOTAL PROJECT	SHEET NO.	TOTAL SHEETS
04	SF	80		72	137

Caltrans Metric

REGISTERED ENGINEER - CIVIL

PLANS APPROVAL DATE

The State of California or its officers or agents shall not be responsible for the accuracy or completeness of electronic copies of this plan sheet.

REGISTERED PROFESSIONAL ENGINEER A.L. ELY No. 18880 Exp. 6-30-07 CIVIL STATE OF CALIFORNIA

T.Y. LIN / MOFFATT & NICHOL
TWO HARRISON STREET
SAN FRANCISCO, CA 94105

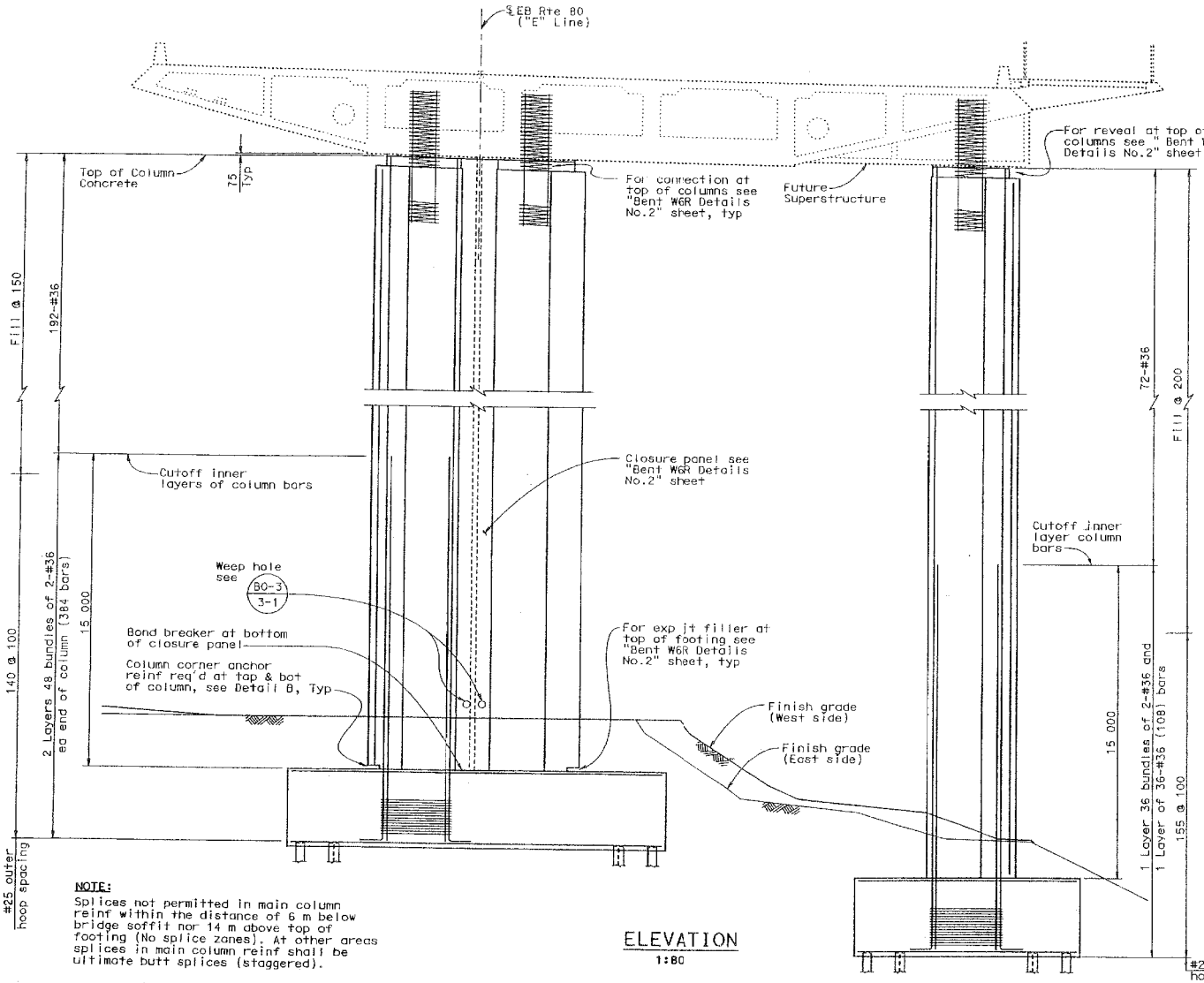

NOTE:
Splices not permitted in main column reinf within the distance of 6 m below bridge soffit nor 14 m above top of footing (No splice zones). At other areas splices in main column reinf shall be ultimate butt splices (staggered).

ELEVATION
1:80

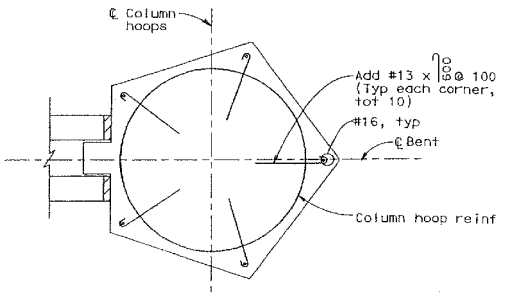

DETAIL B - COLUMN CORNER ANCHOR REINFORCEMENT
(Column corner anchor reinf to be provided in regions within 3000 mm of bridge soffit or top of footing)
No Scale

SUPPLEMENTAL SHEET
CONTRACT NO. 04-0120R4
CONTRACT CHANGE ORDER NO. 73
SHEET 24 OF 28

ALL DIMENSIONS ARE IN MILLIMETERS UNLESS OTHERWISE SHOWN

SAN FRANCISCO OAKLAND BAY BRIDGE
EAST SPAN SEISMIC SAFETY PROJECT

YBI TRANSITION STRUCTURES

ADVANCE CONST PACKAGE NO.1R2

BENT W6R DETAILS NO.1

DESIGN OVERSIGHT: JOHN MOOK, BERNARD CHAN, JUAN F. CARPIO
SIGN OFF DATE
Rev. Date: 5-18-96

	BY	CHECKED
DESIGN	Darrah/Shangkuan	Ahn
DETAILS	van Ryn/Zucchi/Wai	Jain
QUANTITIES	Liao	E. Nichol

PREPARED FOR THE STATE OF CALIFORNIA DEPARTMENT OF TRANSPORTATION

Jal Birdy
PROJECT ENGINEER

BRIDGE NO. 34-0006 L/R
KILOMETER POST 12.8

ORIGINAL SCALE IN MILLIMETERS FOR REDUCED PLANS 0 10 20 30 40 50 60 70 80 90 100

CU 04251
EA 012051

DISREGARD PRINTS BEARING EARLIER REVISION DATES

REVISION DATES (PRELIMINARY STAGE ONLY) 11/24/06 11/29/06 11/29/06 3/30/02 5/30/02 2/14/05 2/1/06 8/18/06 10/31/06 11/30/06

SHEET 16 OF 65

FILE => K:\4141-06\CADD\TS\Final Const\Adv Const Pkg 1R2\eebnt40det.dgn

USERNAME => fsameon DATE PLOTTED => 11/29/2006 TIME PLOTTED => 3:24:58 PM

Nov 29, 2006

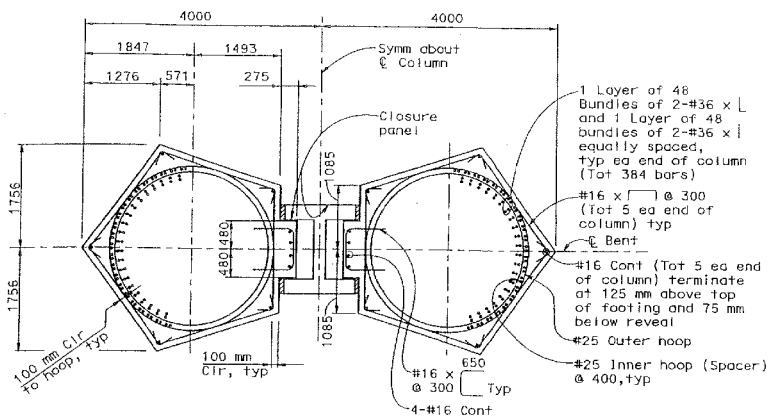

NORTH COLUMN - TYPICAL SECTION
1:40

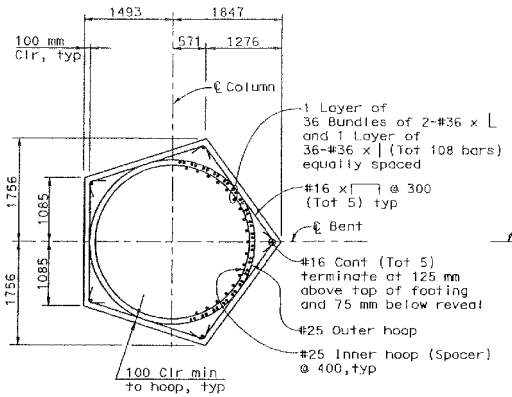

SOUTH COLUMN - TYPICAL SECTION
1:40

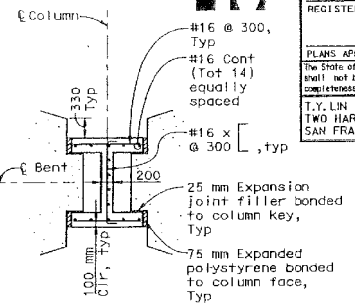

CLOSURE PANEL DETAIL
1:40

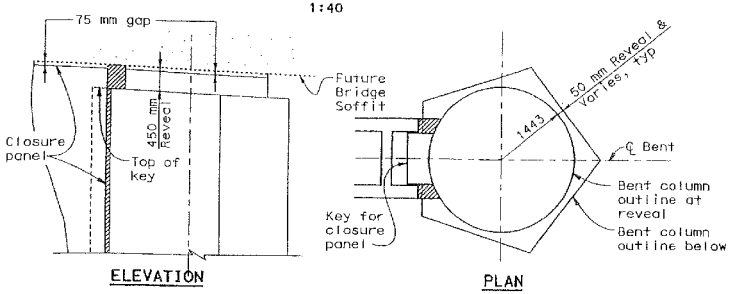

REVEAL DETAIL AT TOP OF COLUMN
(Shown at North column, similar at South column)
NO SCALE

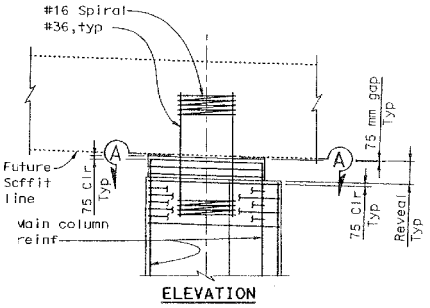

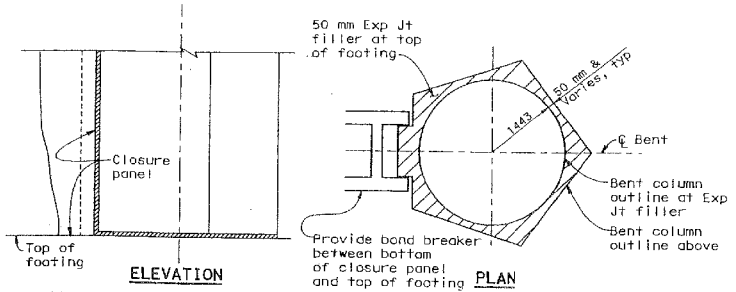

EXPANSION JOINT FILLER AT TOP OF FOOTING
(Shown at North column, similar at South column)
NO SCALE

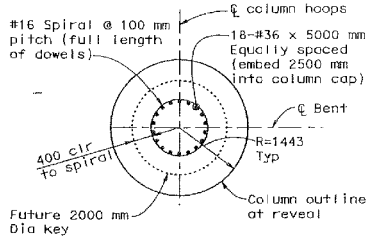

SECTION A-A

CONNECTION DETAIL AT TOP OF COLUMNS
(South column shown, north column similar)
1:50

ALL DIMENSIONS ARE IN MILLIMETERS UNLESS OTHERWISE SHOWN

SUPPLEMENTAL SHEET
CONTRACT CHANGE ORDER NO. 73
SHEET 211 OF 260

SAN FRANCISCO OAKLAND BAY BRIDGE
EAST SPAN SEISMIC SAFETY PROJECT

YBI TRANSITION STRUCTURES

ADVANCE CONST PACKAGE NO.1R2

BENT W6R DETAILS NO.2

DIST	COUNTY	ROUTE	KILOMETER POST TOTAL PROJECT	SHEET NO.	TOTAL SHEETS
04	SF	80		73	137

Caltrans Metric

REGISTERED ENGINEER - CIVIL
A.L. ELY No. 18880 Exp. 6-30-07 CIVIL
REGISTERED PROFESSIONAL ENGINEER STATE OF CALIFORNIA
PLANS APPROVAL DATE
The State of California or its officers or agents shall not be responsible for the accuracy or completeness of electronic copies of this plan sheet.

T.Y. LIN / MOFFATT & NICHOL
TWO HARRISON STREET
SAN FRANCISCO, CA 94105

DESIGN OVERSIGHT
JOHN MOOK, BERNARD CHAN, JUAN F. CARPIO
SIGN OFF DATE

	BY	CHECKED
DESIGN	Darroh/Shangkuan	Ahn
DETAILS	van Ryn/Zucchi/Ala	Jain
QUANTITIES	Liao	E. Michel

PREPARED FOR THE STATE OF CALIFORNIA DEPARTMENT OF TRANSPORTATION

Jal Birdy
PROJECT ENGINEER

BRIDGE NO. 34-0006 L/R
KILOMETER POST 12.8

CU 04251
EA 012051

DISREGARD PRINTS BEARING EARLIER REVISION DATES

REVISION DATES (PRELIMINARY STAGE ONLY)
11/14/06 11/27/06 11/29/06 12/4/06 12/8/06 12/14/06 1/2/06 1/4/06 1/9/06 1/10/06

SHEET 17 OF 65

Rev. Date: 5-16-98

ORIGINAL SCALE IN MILLIMETERS FOR REDUCED PLANS 0 10 20 30 40 50 60 70 80 90 100

FILE => k:\4141-06\CADD\TS\Final Const\Adv Const Pkg 1R2\eebnt41det.dgn

USERNAME => fsumsion DATE PLOTTED => 11/29/2006 TIME PLOTTED => 3:25:10 PM

DIST.	COUNTY	ROUTE	KILOMETER POST TOTAL PROJECT	SHEET NO.	TOTAL SHEETS
04	SF	80		74	137

Caltrans Metric

REGISTERED ENGINEER - CIVIL

PLANS APPROVAL DATE

The State of California or its officers or agents shall not be responsible for the accuracy or completeness of electronic copies of this plan sheet.

REGISTERED PROFESSIONAL ENGINEER A.L. ELY No. 18880 Exp. 6-30-07 CIVIL STATE OF CALIFORNIA

T.Y. LIN / MOFFATT & NICHOL
TWO HARRISON STREET
SAN FRANCISCO, CA 94105

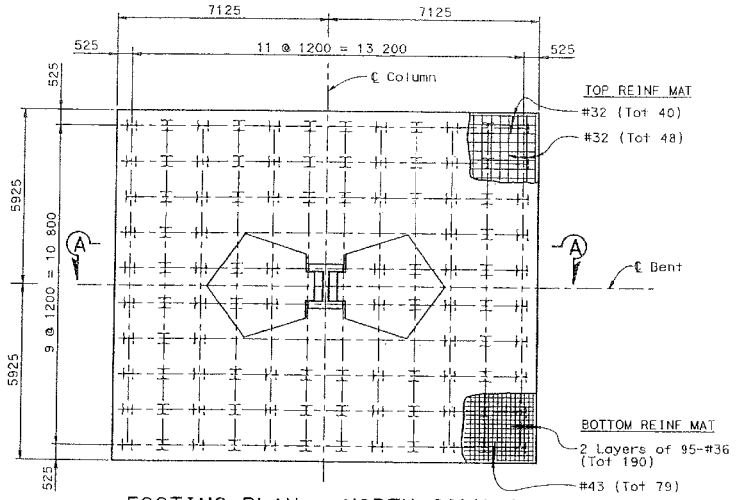

FOOTING PLAN - NORTH COLUMN
(Tot 104 piles)
1:80

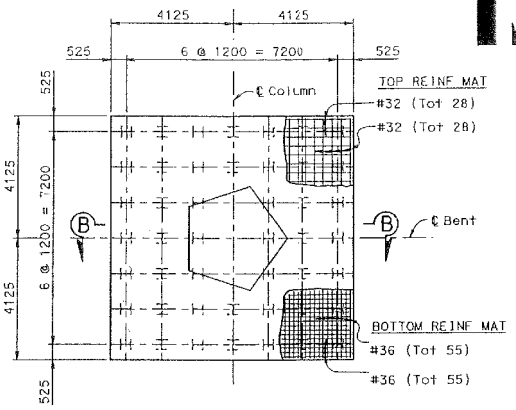

FOOTING PLAN - SOUTH COLUMN
(Tot 46 piles)
1:80

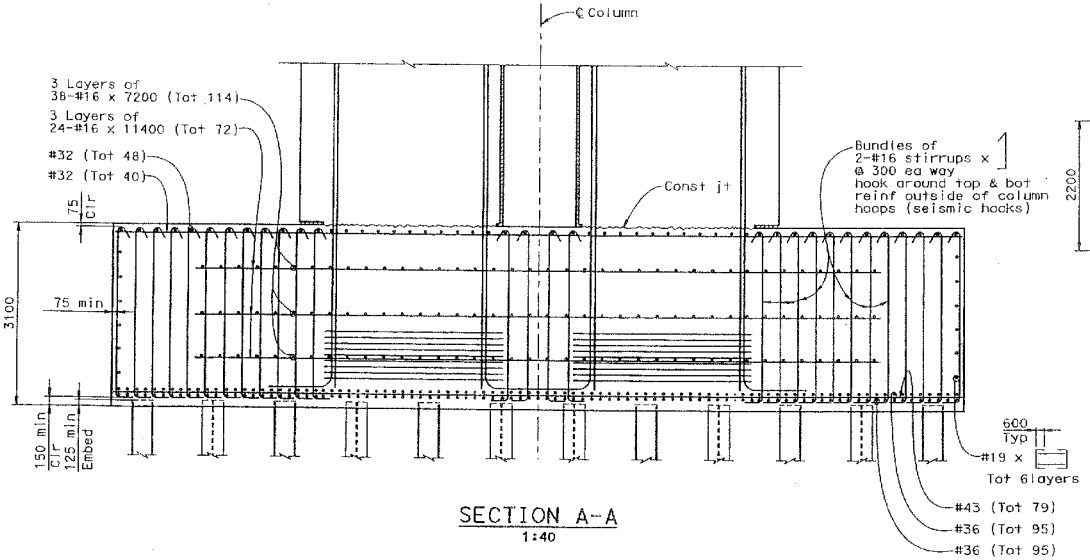

SECTION A-A
1:40

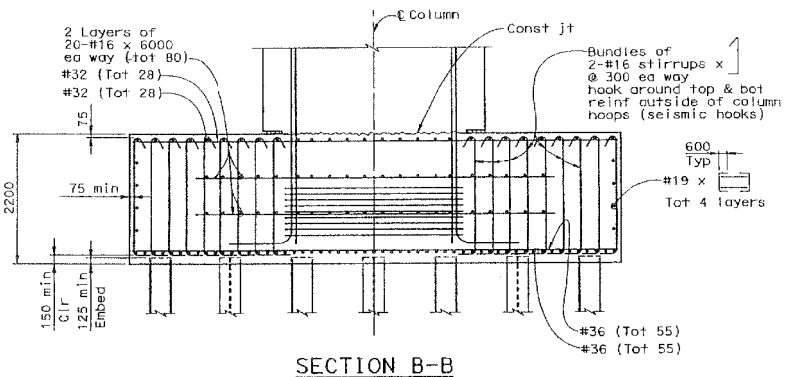

SECTION B-B
1:40

SUPPLEMENTAL SHEET
CONTRACT NO. 04-0120R4
CONTRACT CHANGE ORDER NO. 73
SHEET 246 OF 280

ALL DIMENSIONS ARE IN MILLIMETERS UNLESS OTHERWISE SHOWN

SAN FRANCISCO OAKLAND BAY BRIDGE
EAST SPAN SEISMIC SAFETY PROJECT

YBI TRANSITION STRUCTURES

ADVANCE CONST PACKAGE NO.1R2

BENT W6R DETAILS NO.3

DESIGN OVERSIGHT
JOHN MOOK, BERNARD CHAN, JUAN F. CARPIO
SIGN OFF DATE
Rev. Date: 5-18-96

DESIGN	BY Dodd	CHECKED Desai	
DETAILS Desai	BY van Ryn/Zucchi/Wai	CHECKED Jain	
QUANTITIES	BY Liao	CHECKED E. Nichol	

PREPARED FOR THE STATE OF CALIFORNIA DEPARTMENT OF TRANSPORTATION

Jal Birdy
PROJECT ENGINEER

BRIDGE NO. 34-0006 L/R
KILOMETER POST 12.8

ORIGINAL SCALE IN MILLIMETERS FOR REDUCED PLANS 0 10 20 30 40 50 60 70 80 90 100

CU 04251
EA 0120S1

DISREGARD PRINTS BEARING EARLIER REVISION DATES

REVISION DATES (PRELIMINARY STAGE ONLY) 11/20/06 11/29/06 11/29/06 3/20/02 5/20/02 7/24/01 7/24/06 7/24/06 11/31/06 11/30/06

SHEET 18 OF 65

FILE => k:\4141-06\CADD\TS\Final Const\Adv Const Pkg 1R2\eebnt43aaet.dgn

USERNAME => fkampson DATE PLOTTED => 11/29/2006 TIME PLOTTED => 3:25:19 PM

Nov 29, 2006

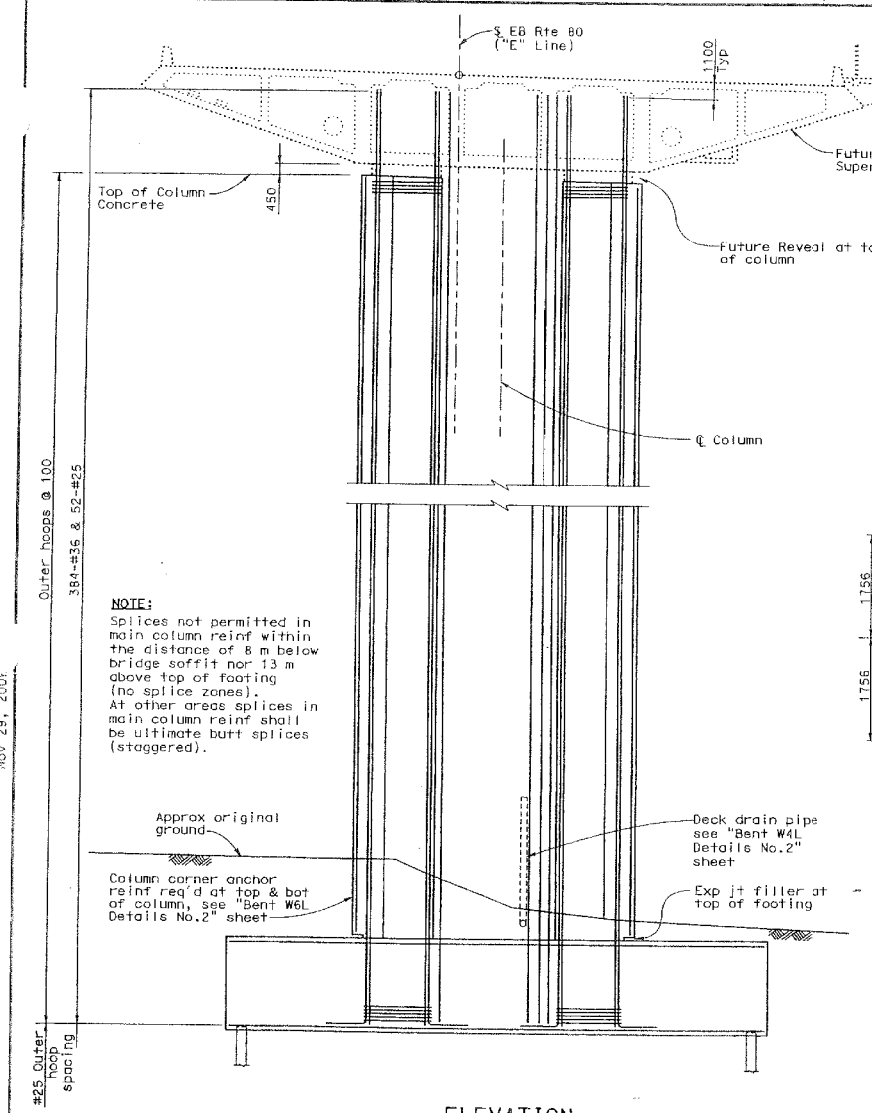

NOTE:
Splices not permitted in main column reinf within the distance of 8 m below bridge soffit nor 13 m above top of footing (no splice zones).
At other areas splices in main column reinf shall be ultimate butt splices (staggered).

ELEVATION
1:100

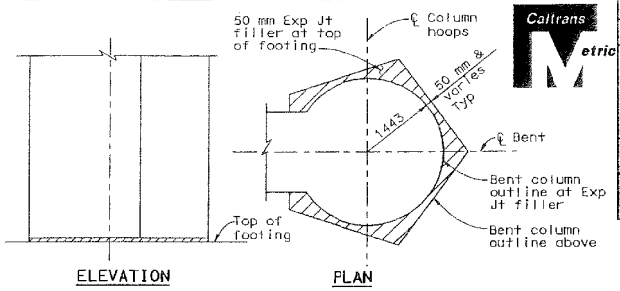

EXPANSION JOINT FILLER AT TOP OF FOOTING
(Typical Bents W5R & W4R)
NO SCALE

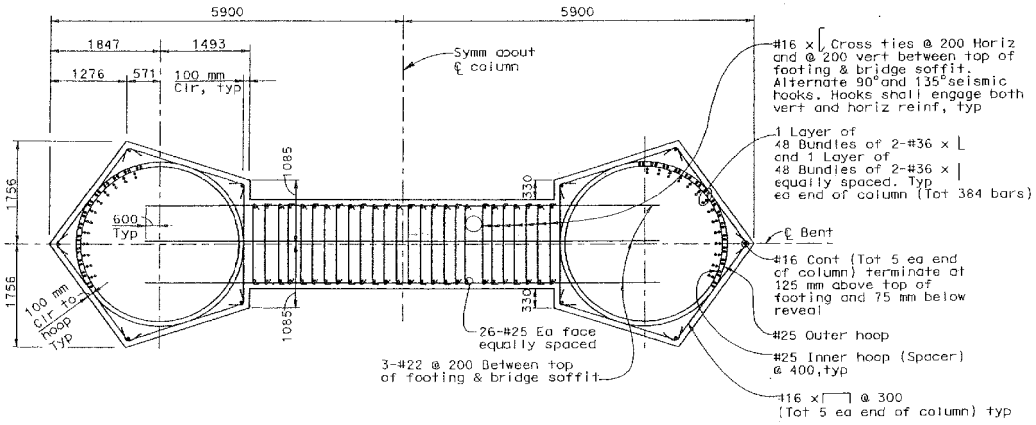

TYPICAL COLUMN SECTION
1:40

DIST.	COUNTY	ROUTE	KILOMETER POST TOTAL PROJECT	SHEET NO.	TOTAL SHEETS
04	SF	80		75	137

Caltrans Metric

REGISTERED ENGINEER - CIVIL

PLANS APPROVAL DATE

The State of California or its officers or agents shall not be responsible for the accuracy or completeness of electronic copies of this plan sheet.

REGISTERED PROFESSIONAL ENGINEER A.L. ELY No. 18880 Exp. 6-30-07 CIVIL STATE OF CALIFORNIA

T.Y. LIN / MOFFATT & NICHOL
TWO HARRISON STREET
SAN FRANCISCO, CA 94105

SUPPLEMENTAL SHEET
CONTRACT NO. 04-012084
CONTRACT CHANGE ORDER NO. 78
SHEET 214 OF 250

ALL DIMENSIONS ARE IN MILLIMETERS UNLESS OTHERWISE SHOWN

SAN FRANCISCO OAKLAND BAY BRIDGE
EAST SPAN SEISMIC SAFETY PROJECT

YBI TRANSITION STRUCTURES

ADVANCE CONST PACKAGE NO.1R2

BENT W5R DETAILS NO.1

DESIGN OVERSIGHT
JOHN MOOK, BERNARD CHAN, JUAN F. CARPIO
SIGN OFF DATE
Rev. Date: 5-16-98

DESIGN	BY Darrah/Shangkuan	CHECKED Ahn	
DETAILS	BY van Ryn/Zucchi/Mai	CHECKED Jain	
QUANTITIES	BY Liao	CHECKED E. Nichol	

PREPARED FOR THE STATE OF CALIFORNIA DEPARTMENT OF TRANSPORTATION

Jal Birdy
PROJECT ENGINEER

BRIDGE NO. 34-0006 L/R
KILOMETER POST 12.8

ORIGINAL SCALE IN MILLIMETERS FOR REDUCED PLANS 0 10 20 30 40 50 60 70 80 90 100

CU 04251
EA 012051

DISREGARD PRINTS BEARING EARLIER REVISION DATES

REVISION DATES (PRELIMINARY STAGE ONLY)

SHEET 19 OF 65

FILE => k:\4141-06\CADD\TS\Final Const\Adv Const Pkg 1R2\eebnt44det.dgn

USERNAME => fsamson DATE PLOTTED => 11/29/2006 TIME PLOTTED => 3:25:32 PM

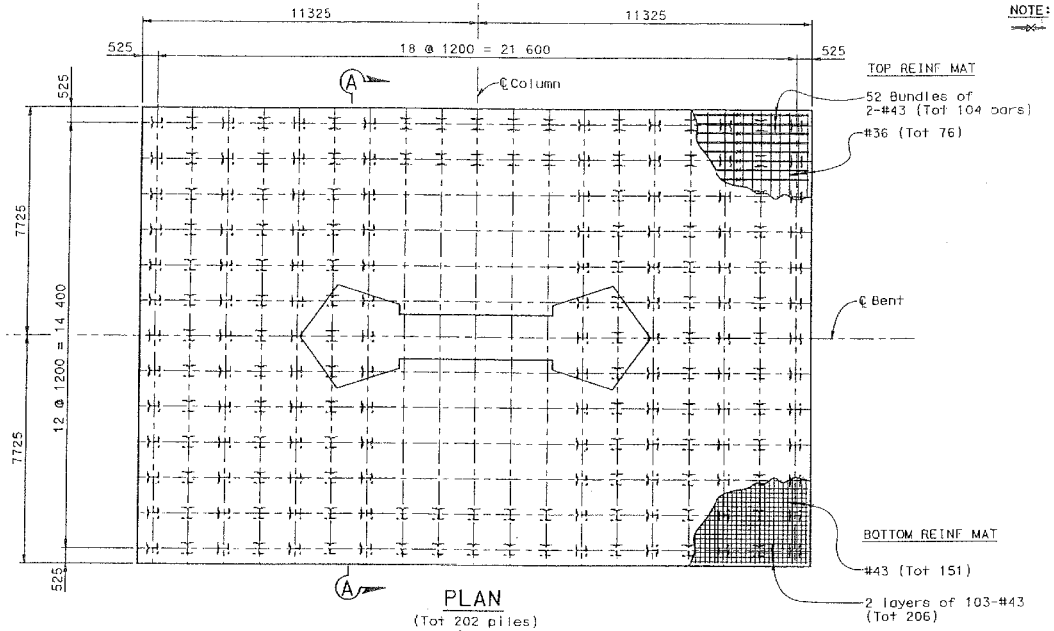

PLAN
(Tot 202 piles)
1:80

NOTE:
Indicates bundled bars

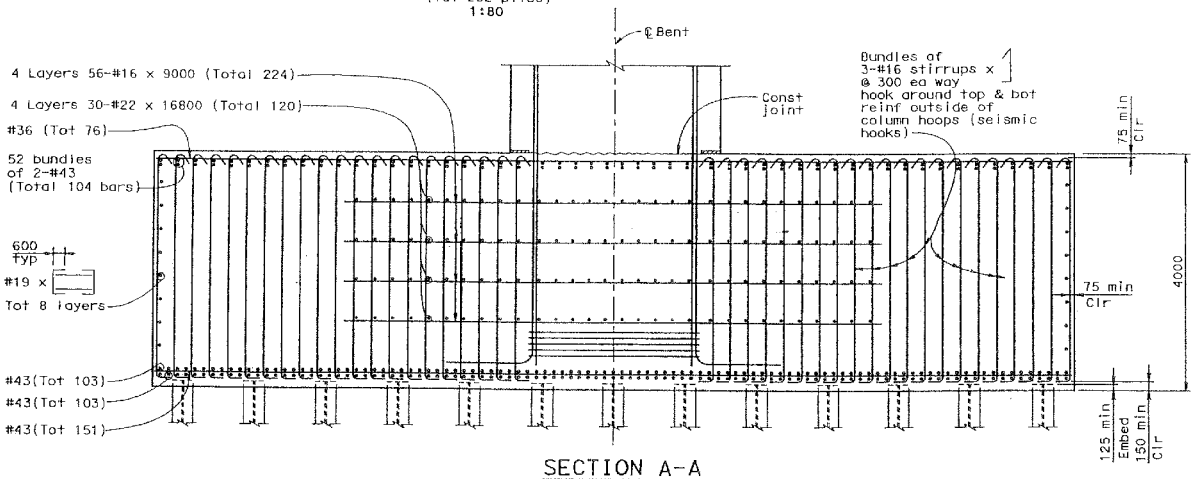

SECTION A-A
1:40

ALL DIMENSIONS ARE IN MILLIMETERS UNLESS OTHERWISE SHOWN

DIST	COUNTY	ROUTE	KILOMETER POST TOTAL PROJECT	SHEET NO.	TOTAL SHEETS
04	SF	80		76	137

REGISTERED ENGINEER - CIVIL
PLANS APPROVAL DATE
The State of California or its officers or agents shall not be responsible for the accuracy or completeness of electronic copies of this plan sheet.

REGISTERED PROFESSIONAL ENGINEER
A. L. ELY
No. 18880
Exp. 6-30-07
CIVIL
STATE OF CALIFORNIA

T.Y. LIN / MOFFATT & NICHOL
TWO HARRISON STREET
SAN FRANCISCO, CA 94105

SUPPLEMENTAL SHEET
CONTRACT NO. 04-0120R4
CONTRACT CHANGE ORDER NO. 73
SHEET 22 OF 22

SAN FRANCISCO OAKLAND BAY BRIDGE
EAST SPAN SEISMIC SAFETY PROJECT

YBI TRANSITION STRUCTURES

ADVANCE CONST PACKAGE NO.1R2

BENT W5R DETAILS NO.2

DESIGN OVERSIGHT
JOHN MOOK, BERNARD CHAN, JUAN F. CARRIO
SIGN OFF DATE
Rev. Date: 5-18-98

	BY	CHECKED
DESIGN	Dodd	Desai
DETAILS	van Ryn/Zucchi/Mai	Join
QUANTITIES	Liao	E. Nichol

PREPARED FOR THE
STATE OF CALIFORNIA
DEPARTMENT OF TRANSPORTATION

Jal Birdy
PROJECT ENGINEER

BRIDGE NO. 34-0006 L/R
KILOMETER POST 12.8

CU 04251
EA 012051

ORIGINAL SCALE IN MILLIMETERS FOR REDUCED PLANS 0 10 20 30 40 50 60 70 80 90 100

DISREGARD PRINTS BEARING EARLIER REVISION DATES

REVISION DATES (PRELIMINARY STAGE ONLY)
11/20/06 11/20/06 11/21/06 3/2/07 5/2/07 7/24/07 10/1/07 10/5/07 10/30/07 11/20/07

SHEET 20 OF 65

FILE => k:\4141-06\CADD\TS\Final Const\Adv Const Pkg 1R2\eabnt146dst.dgn

DATE PLOTTED => 11/29/2006 TIME PLOTTED => 3:25:43 PM
USERNAME => Rasmson
Nov 29, 2006

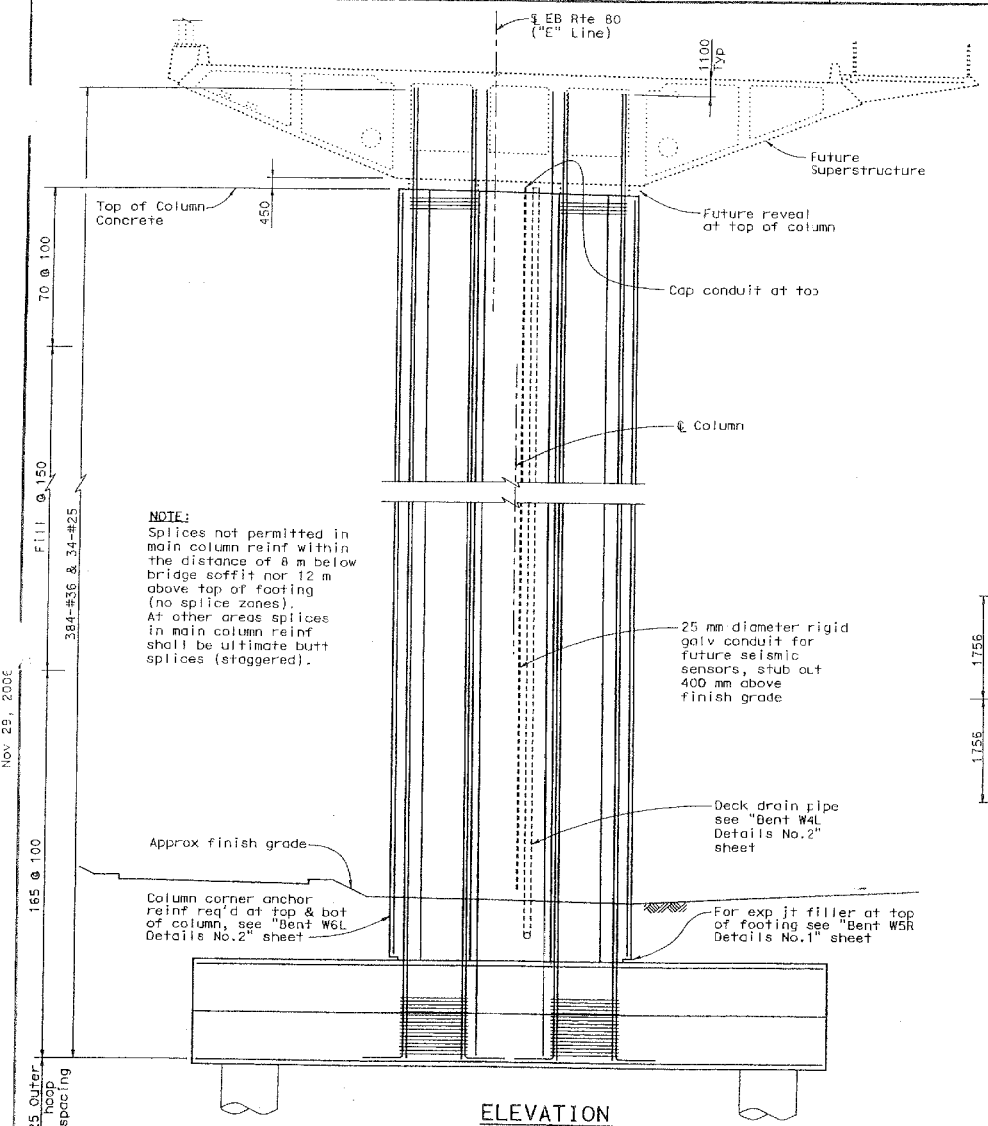

ELEVATION
1:100

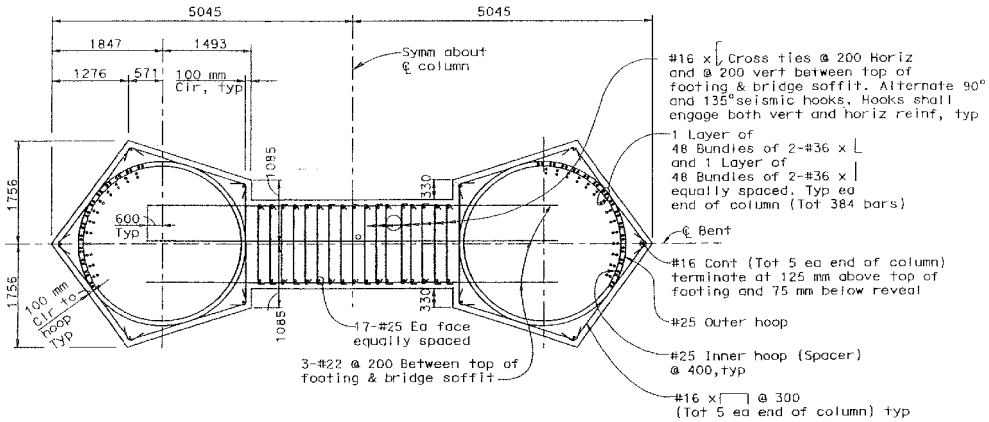

TYPICAL COLUMN SECTION
1:40

DIST.	COUNTY	ROUTE	KILOMETER POST TOTAL PROJECT	SHEET NO.	TOTAL SHEETS
04	SF	80		77	137

Caltrans Metric

REGISTERED ENGINEER - CIVIL

PLANS APPROVAL DATE

The State of California or its officers or agents shall not be responsible for the accuracy or completeness of electronic copies of this plan sheet.

REGISTERED PROFESSIONAL ENGINEER A.L. ELY No. 18880 Exp. 6-30-07 CIVIL STATE OF CALIFORNIA

T.Y. LIN / MOFFATT & NICHOL
TWO HARRISON STREET
SAN FRANCISCO, CA 94105

SUPPLEMENTAL SHEET
CONTRACT NO. 04-0120R4
CONTRACT CHANGE ORDER NO. 73
SHEET 221 OF 290

ALL DIMENSIONS ARE IN MILLIMETERS UNLESS OTHERWISE SHOWN

SAN FRANCISCO OAKLAND BAY BRIDGE
EAST SPAN SEISMIC SAFETY PROJECT

YBI TRANSITION STRUCTURES

ADVANCE CONST PACKAGE NO.1R2

BENT W4R DETAILS NO.1

DESIGN OVERSIGHT
JOHN MOOK, BERNARD CHAN, JUAN F. CARPIO

SIGN OFF DATE

Rev. Date: 5-18-98

DESIGN	BY Darroh/Shangkuan	CHECKED Ahn	
DETAILS	BY van Ryn/Zucchi/Mei	CHECKED Jain	
QUANTITIES	BY Liao	CHECKED E. Nichol	

PREPARED FOR THE STATE OF CALIFORNIA DEPARTMENT OF TRANSPORTATION

Jal Birdy
PROJECT ENGINEER

BRIDGE NO. 34-0006 L/R
KILOMETER POST 12.8

ORIGINAL SCALE IN MILLIMETERS FOR REDUCED PLANS 0 10 20 30 40 50 60 70 80 90 100

CU 04251
EA 012051

DISREGARD PRINTS BEARING EARLIER REVISION DATES

REVISION DATES (PRELIMINARY STAGE ONLY)

SHEET 21 OF 65

FILE => k:\4141-06\CADD\TS\Final Const\Adv Const Pkg 1R2\eebnt47de-.dgn

USERNAME => fsamson DATE PLOTTED => 11/29/2006 TIME PLOTTED => 3:25:56 PM

Nov 29, 2006

DIST.	COUNTY	ROUTE	KILOMETER POST TOTAL PROJECT	SHEET NO.	TOTAL SHEETS
04	SF	80		78	137

Caltrans Metric

REGISTERED ENGINEER - CIVIL

PLANS APPROVAL DATE

The State of California or its officers or agents shall not be responsible for the accuracy or completeness of electronic copies of this plan sheet.

REGISTERED PROFESSIONAL ENGINEER A.L. ELY No. 18880 Exp. 6-30-07 CIVIL STATE OF CALIFORNIA

T.Y. LIN / MOFFATT & NICHOL
TWO HARRISON STREET
SAN FRANCISCO, CA 94105

SUPPLEMENTAL SHEET
contract NO. 04-012084
CONTRACT CHANGE ORDER NO. 73
SHEET 222 **OF** 256

NOTE:
Indicates bundled bars
(4) Indicates pile no. on pile data table, see "General Notes" sheet

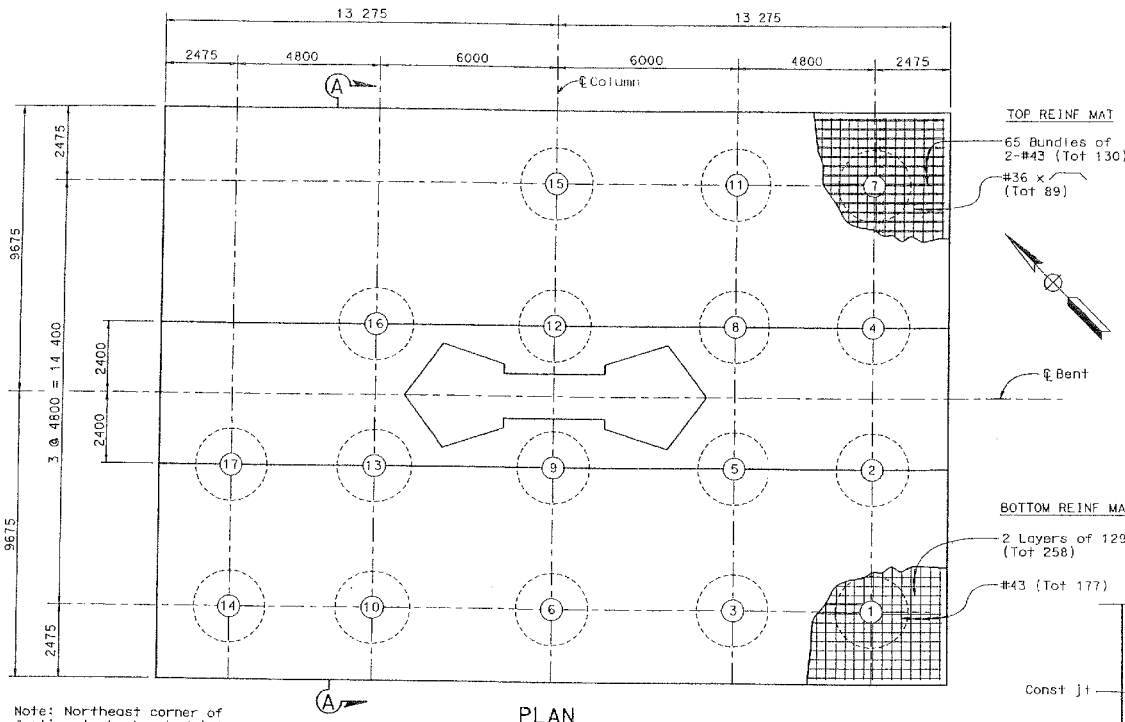

Note: Northeast corner of footing to be benched into and supported by existing bedrock.

PLAN
(Tot 17 piles)
1:80

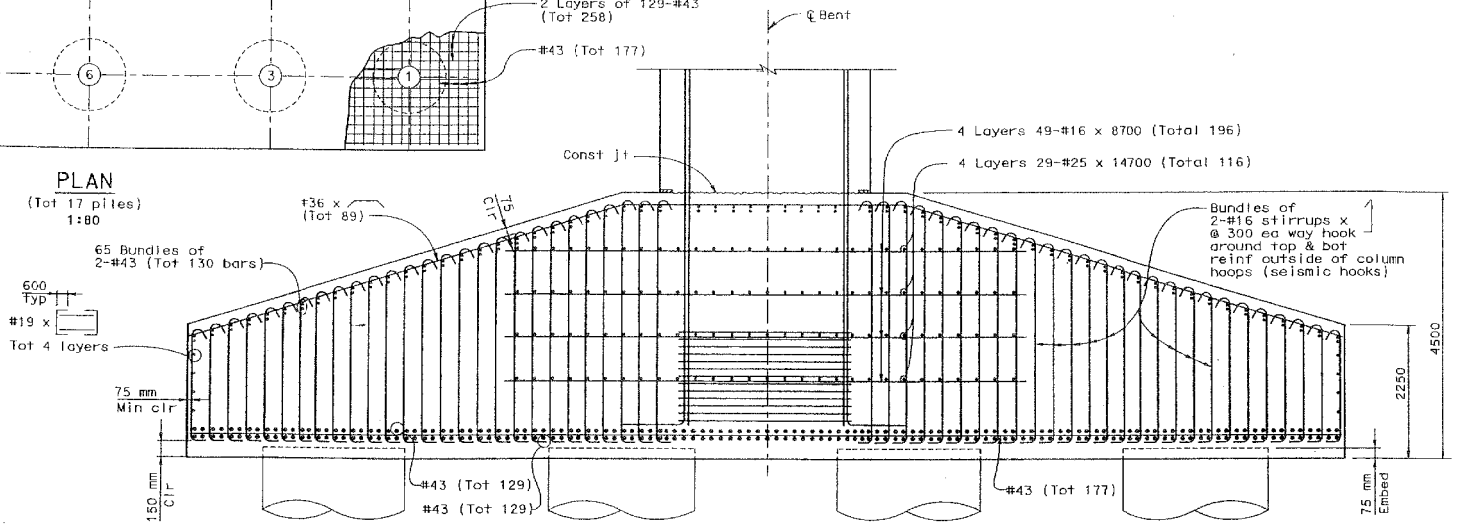

SECTION A-A
1:40

ALL DIMENSIONS ARE IN MILLIMETERS UNLESS OTHERWISE SHOWN

SAN FRANCISCO OAKLAND BAY BRIDGE
EAST SPAN SEISMIC SAFETY PROJECT

YBI TRANSITION STRUCTURES

ADVANCE CONST PACKAGE NO.1R2

BENT W4R DETAILS NO.2

DESIGN OVERSIGHT
JOHN MOOK, BERNARD CHAN, JUAN F. CARPIO

SIGN OFF DATE

Rev. Date: 5-12-98

	BY	CHECKED
DESIGN	Dodd	Desai
DETAILS	van Ryn/Zucchi/Wai	Jain
QUANTITIES	Liao	E. Nichol

PREPARED FOR THE STATE OF CALIFORNIA DEPARTMENT OF TRANSPORTATION

Jal Birdy
PROJECT ENGINEER

BRIDGE NO. 34-0006 L/R
KILOMETER POST 12.8

ORIGINAL SCALE IN MILLIMETERS FOR REDUCED PLANS 0 10 20 30 40 50 60 70 80 90 100

CU 04251
EA 012051

DISREGARD PRINTS BEARING EARLIER REVISION DATES

REVISION DATES (PRELIMINARY STAGE ONLY)

SHEET 22 OF 65

FILE => K:\4141-06\CADD\TS\Final Const\Adv Const Pkg 1R2\eebnt49det.dgn

USERNAME => fsamson DATE PLOTTED => 11/29/2006 TIME PLOTTED => 3:26:09 PM

Nov 29, 2006

DIST.	COUNTY	ROUTE	KILOMETER POST TOTAL PROJECT	SHEET NO.	TOTAL SHEETS
04	SF	80		79	137

Caltrans Metric

REGISTERED ENGINEER - CIVIL

PLANS APPROVAL DATE

The State of California or its officers or agents shall not be responsible for the accuracy or completeness of electronic copies of this plan sheet.

REGISTERED PROFESSIONAL ENGINEER A.L. ELY No. 18880 Exp. 6-30-07 CIVIL STATE OF CALIFORNIA

T.Y. LIN / MOFFATT & NICHOL
TWO HARRISON STREET
SAN FRANCISCO, CA 94105

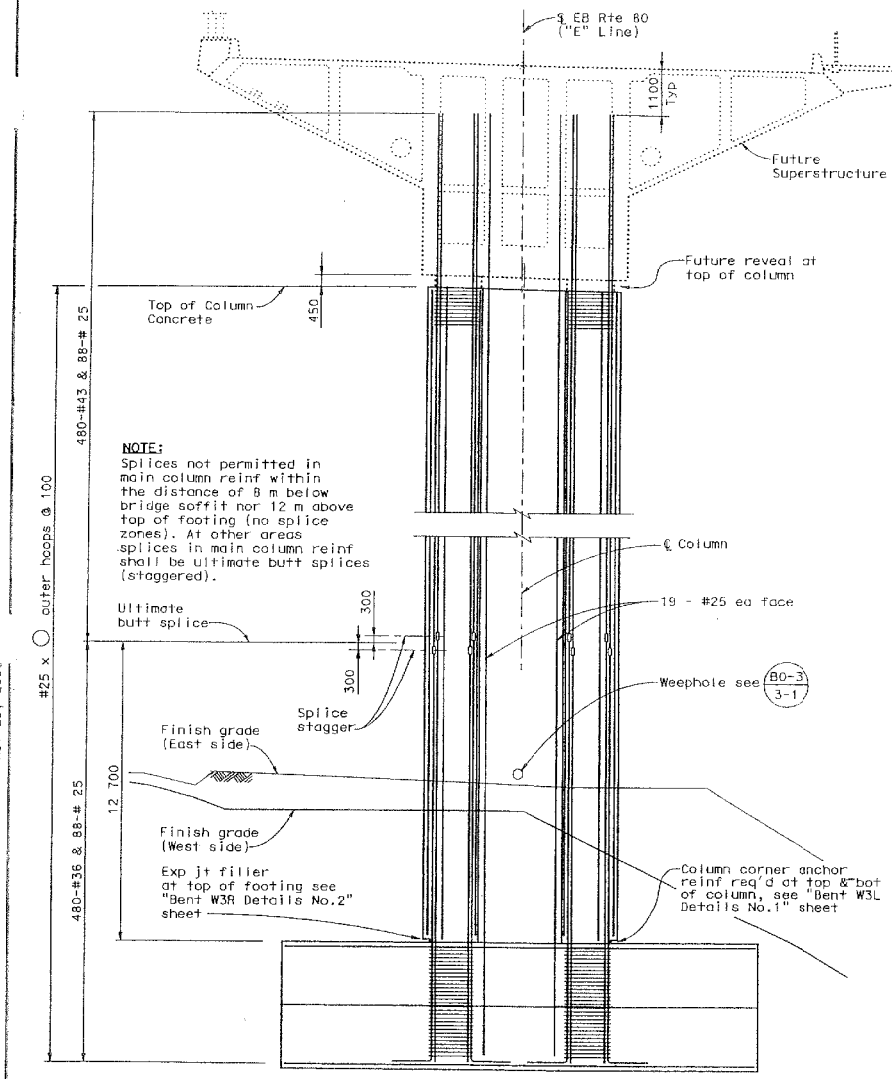

ELEVATION
1:100

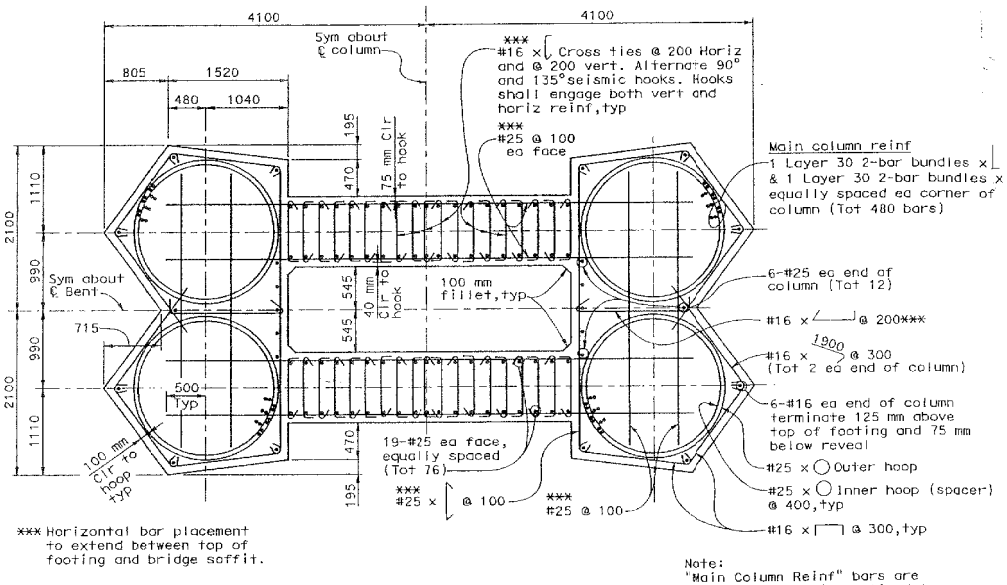

*** Horizontal bar placement to extend between top of footing and bridge soffit.

TYPICAL COLUMN SECTION
1:30

Note:
"Main Column Reinf" bars are #36 bars at footing spliced to #43 bars which extend into bent cap, see elevation.

SUPPLEMENTAL SHEET
CONTRACT NO. 04-0120R4
CONTRACT CHANGE ORDER NO. 73
SHEET 223 OF 250

ALL DIMENSIONS ARE IN MILLIMETERS UNLESS OTHERWISE SHOWN

SAN FRANCISCO OAKLAND BAY BRIDGE
EAST SPAN SEISMIC SAFETY PROJECT

YBI TRANSITION STRUCTURES

ADVANCE CONST PACKAGE NO.1R2

BENT W3R DETAILS NO.1

DESIGN OVERSIGHT
JOHN MOOK, BERNARD CHAN, JUAN F. CARPIO
SIGN OFF DATE
Rev. Date: 5-18-98

DESIGN	BY Darrah/Shangkuan	CHECKED Ahn	
DETAILS	BY van Ryn/Zucchi/Mai	CHECKED Jain	
QUANTITIES	BY Liao	CHECKED E. Nichol	

PREPARED FOR THE STATE OF CALIFORNIA DEPARTMENT OF TRANSPORTATION

Jal Birdy
PROJECT ENGINEER

BRIDGE NO. 34-0006 L/R
KILOMETER POST 12.8

ORIGINAL SCALE IN MILLIMETERS FOR REDUCED PLANS 0 10 20 30 40 50 60 70 80 90 100

CU 04251
EA 0120S1

DISREGARD PRINTS BEARING EARLIER REVISION DATES

REVISION DATES (PRELIMINARY STAGE ONLY)

SHEET 23 OF 65

FILE => K:\4141-06\CADD\TS\Final Const\Adv Const Pkg 1R2\eebnt50de1.dgn

USERNAME => fsamson DATE PLOTTED => 11/29/2006 TIME PLOTTED => 3:26:22 PM

Nov 29, 2006

CONTRACT NO. ____

CONTRACT CHANGE ORDER NO ____

SHEET ____ OF ____

DIST.	COUNTY	ROUTE	KILOMETER POST TOTAL PROJECT	SHEET NO.	TOTAL SHEETS
04	SF	80		80	137

Caltrans Metric

REGISTERED ENGINEER - CIVIL

PLANS APPROVAL DATE

The State of California or its officers or agents shall not be responsible for the accuracy or completeness of electronic copies of this plan sheet.

REGISTERED PROFESSIONAL ENGINEER A.L. ELY No. 18880 Exp. 6-30-07 CIVIL STATE OF CALIFORNIA

T.Y. LIN / MOFFATT & NICHOL
TWO HARRISON STREET
SAN FRANCISCO, CA 94105

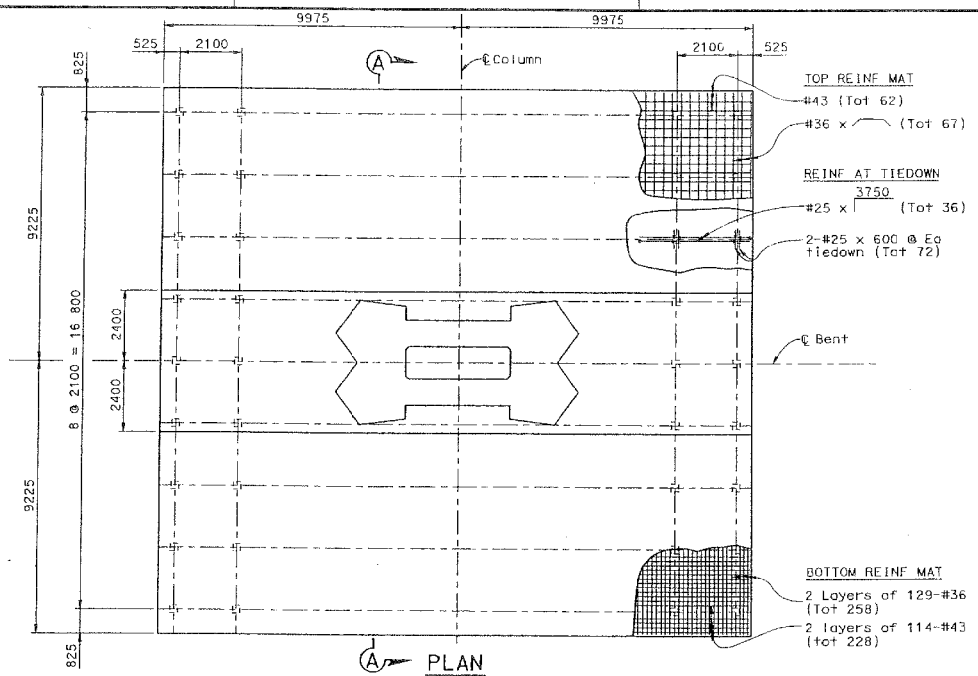

PLAN
(Tot 36 tiedown anchors)
1:80

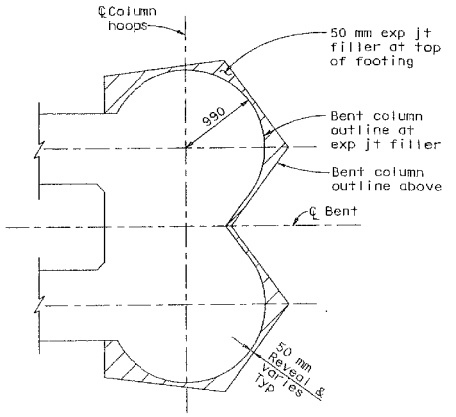

PLAN

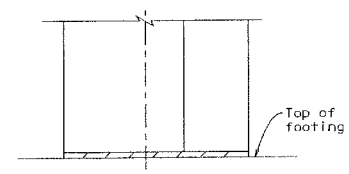

ELEVATION

EXPANSION JOINT FILLER DETAIL
AT TOP OF FOOTING
NO SCALE

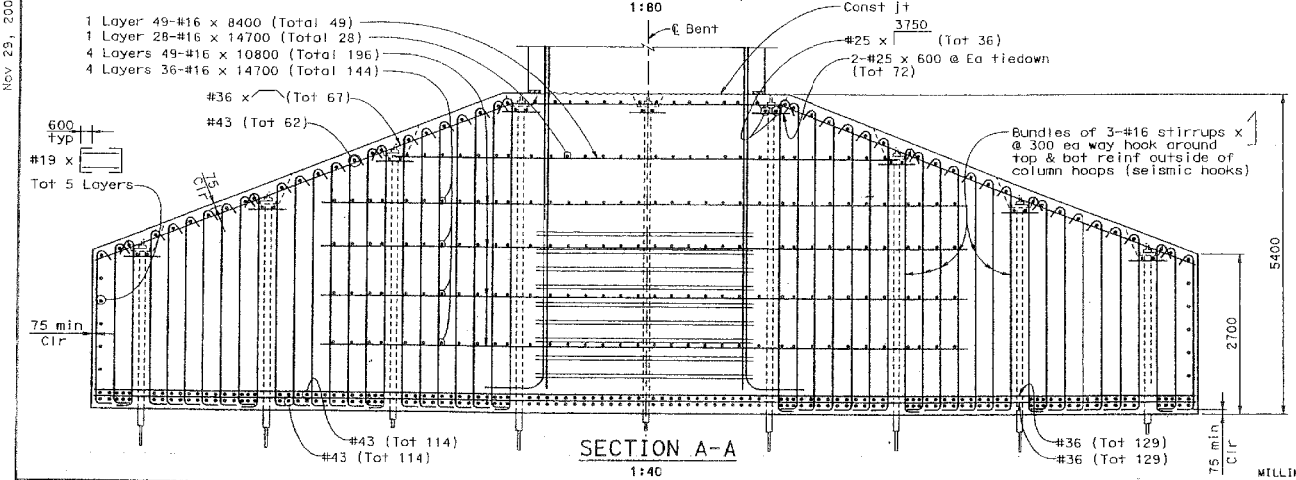

SECTION A-A
1:40

ALL DIMENSIONS ARE IN MILLIMETERS UNLESS OTHERWISE SHOWN

SUPPLEMENTAL SHEET
CONTRACT NO. 04-0120R4
CONTRACT CHANGE ORDER NO. 23
SHEET 224 OF 250

SAN FRANCISCO OAKLAND BAY BRIDGE
EAST SPAN SEISMIC SAFETY PROJECT

YBI TRANSITION STRUCTURES

ADVANCE CONST PACKAGE NO.1R2

BENT W3R DETAILS NO.2

DESIGN OVERSIGHT
JOHN MOOK, BERNARD CHAN, JUAN F. CARPIO
SIGN OFF DATE

Rev. Date: 5-18-06

DESIGN	BY Dodd	CHECKED Desai	
DETAILS	BY van Ryn/Zucchi/Wai	CHECKED Jain	
QUANTITIES	BY Liao	CHECKED E. Nichol	

PREPARED FOR THE STATE OF CALIFORNIA DEPARTMENT OF TRANSPORTATION

Jal Birdy
PROJECT ENGINEER

BRIDGE NO. 34-0006 L/R
KILOMETER POST 12.8

ORIGINAL SCALE IN MILLIMETERS FOR REDUCED PLANS 0 10 20 30 40 50 60 70 80 90 100

CU 04251
EA 0120S1

DISREGARD PRINTS BEARING EARLIER REVISION DATES

REVISION DATES (PRELIMINARY STAGE ONLY) 11/30/06 11/27/06 11/29/06 3/30/07 5/30/07 2/14/07 1/2/08 3/24/08 10/31/08 11/30/08

SHEET 24 OF 65

FILE => k:\4141-06\CADD\TS\Final Const\Adv Const Pkg 1R2\eebnt51det.dgn

USERNAME => fsamson DATE PLOTTED => 11/29/2006 TIME PLOTTED => 3:26:33 PM

Nov 29, 2006

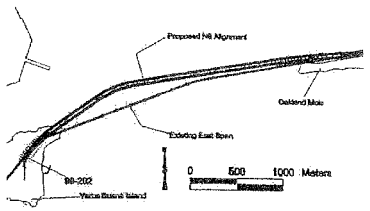

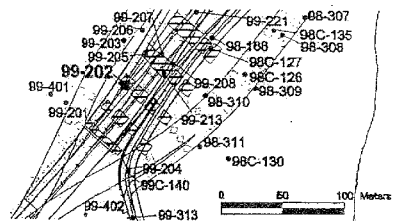

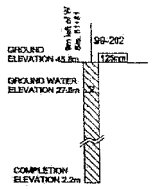

Metric

DIST	COUNTY	ROUTE	KILOMETER POST / TOTAL PROJECT	SHEET NO.	TOTAL SHEETS
04	SF	80		81	137

PROJECT ENGINEER: Mark Kyle
REGISTERED GEOTECHNICAL ENGINEER

REGISTERED PROFESSIONAL ENGINEER — MIKE KAPUSKAR — No. GE 2564 Exp. 12-31-05 — GEOTECHNICAL — STATE OF CALIFORNIA

PLANS APPROVAL DATE

FUGRO-EARTH MECHANICS, A JOINT VENTURE
7700, Edgewater Dr., Ste. 840,
Oakland, CA 94621
(510) 562-8833, FAX (510) 562-8856

The State of California or its officers or agents shall not be responsible for the accuracy or completeness of electronic copies of this plan sheet.

SOIL AND ROCK TYPES

Well graded GRAVEL (GW)
Poorly graded GRAVEL (GP)
GRAVEL with clay (GP or GW)
Clayey GRAVEL (GC)
GRAVEL with silt (GP or GW)
Silty GRAVEL (GM)
Well graded SAND (SW)
Poorly graded SAND (SP)
SAND with gravel (SP or SW)
SAND with clay (SP-SC)
Clayey SAND (SC)
Silty SAND (SM)
SAND with silt (SP-SM)
Fat CLAY (CH)
Sandy fat CLAY (CH)
Lean CLAY (CL)
Sandy lean CLAY (CL)
Silty CLAY (CL-ML)
Sandy SILT (OH)
SILT (ML)
Sandy SILT (ML)
Clayey silt (ML/CL)
Highly plastic ORGANICS (OH)
Low plasticity ORGANICS (OL)
SANDSTONE (Rs)
SILTSTONE (Rs)
CLAYSTONE (Rs)
Interbedded Rock Strata (Rs)
PAVEMENT

SAMPLERS

- 76mm-OD, 72mm-ID Thin Walled Tube
- 87mm-OD, 84mm-ID* Thin Walled Drive Tube
- 63.5mm-OD, 54mm-ID Chrome Liner
- 76mm-OD, 60mm-ID Modified California Liner
- 76mm-OD, 34mm-ID SPT Split Spoon Sampler
- Rock Core (Heat symbol represents Recovery (%)

*A variable-OD, 84-mm-ID tapered driven tube was used to sample coarse sand, gravel and rock

STANDARD PENETRATION TEST (SPT) AND MODIFIED CALIFORNIA (MC) LINER SAMPLERS

Samplers were driven with a 63.5 kg hammer dropped approximately 760 mm.

- 30 — Number of blows to produce 30 cm of penetration after the initial 15 cm of seating
- 85/23cm — Number of blows required to produce the indicated penetration after an initial 15 cm seating.
- Refusal — 20 blows produced the indicated penetration during the initial 15 cm interval.

Note: In rock coring interval recovery(%) ROD are shown in the Blow Count column.

TUBE AND OFFSHORE LINER SAMPLERS

- WOH — Offshore Liner sample advanced with the weight of an 80 kg hammer.
- PUSH or 8AVE — Pushed 8in-wide 76mm-OD tube.
- 15/60cm — Number of blows required to produce the indicated penetration using a 64mm-ID tube sampler. The sampler was driven with an 80 kg downhole hammer dropped approximately 1.5 m.

CLASSIFICATION TESTS BLOW COUNTS AND ROCK QUALITY

- PERCENT PASSING #200 SIEVE
- WATER CONTENT (%)
- DRY UNIT WEIGHT (lb/ft³)
- THEORETICAL UNIT WEIGHT (lb/ft³)
- PLASTIC LIMIT / LIQUID LIMIT
- EQUIVALENT SPT BLOW COUNT = (MC BLOWCOUNT/1.8) OR SPT BLOWCOUNT
- ROCK QUALITY DESIGNATION (RQD)
- ROCK RECOVERY PERCENT
- ROCK CORING RATE

STRENGTH TESTS

- POCKET PENETROMETER
- TORVANE
- REMOTE VANE
- MINIATURE VANE (b = RESIDUAL VANE)
- UNCONSOLIDATED UNDRAINED TRIAXIAL
- STRENGTH FALL CONE
- UNCONFINED COMPRESSION (SOIL)
- Open symbols indicate remolded tests
- Shear strength interpolated from CPT by Robertson (Pa = 10 kg)
- POINT LOAD TEST (ROCK-INTACT SPECIMEN)
- POINT LOAD TEST (ROCK-ALONG WEAK PLANE)
- UNCONFINED COMPRESSION (ROCK)
- Bolt Strength (Excepts Density of Measuring Device. Rock: Sample broke along discontinuity; Intact sample would have greater strength
- FRACTURE DENSITY (ROCK)

STRENGTH OF COHESIVE SOILS

Consistency	Undrained Shear Strength kPa
Very Soft	less than 12
Soft	12 to 25
Firm	25 to 50
Stiff	50 to 100
Very Stiff	100 to 200
Hard	greater than 200

DENSITY OF GRANULAR SOILS

Descriptive Term	Relative Density (%)*
Very Loose	less than 15
Loose	15 to 35
Medium Dense	35 to 65
Dense	65 to 85
Very Dense	greater than 85

*Estimated from sampler driving record and CPT by Robertson

BORING 99-202

COORDINATES: E1639927 N647211
CA State Plane Zone 3, NAD83, Meters
GROUND ELEVATION: 45.8m (MSL)
START DATE: 10/20/99

STATION: 3m left of W Sta. 51+61
COMPLETION ELEVATION: 2.2m (MSL)
END DATE: 10/21/99

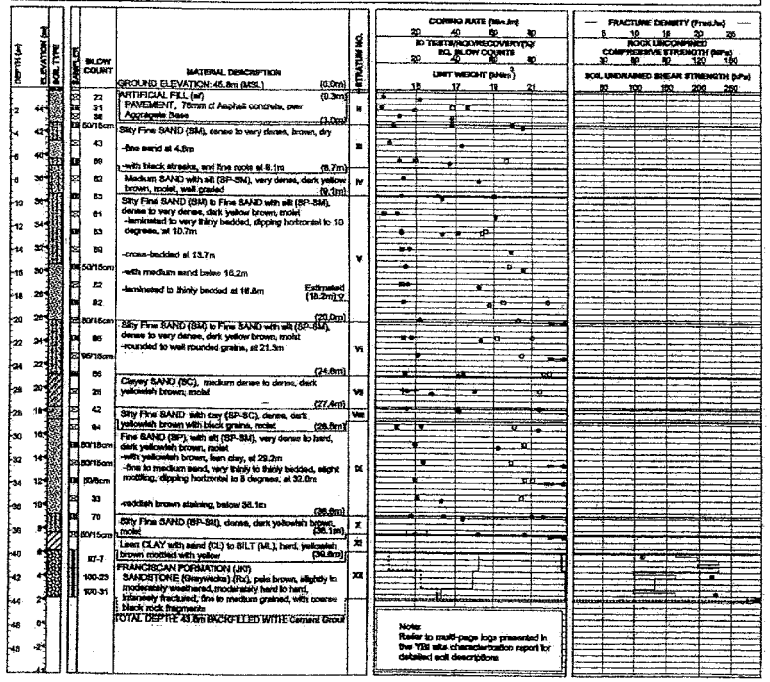

CONTRACT NO. 04-0120R4

CONTRACT CHANGE ORDER NO 93

SHEET 225 OF 256

ROBERT PRICE / BABA MOHAN — GEOTECHNICAL Design Overseers	DRAWN BY	J. PALMER	B. SCHELL — FIELD INVESTIGATION	PREPARED FOR THE STATE OF CALIFORNIA DEPARTMENT OF TRANSPORTATION	M. KAPUSKAR — PROJECT ENGINEER
	CHECKED BY	S. VARATHARAJ	DATE SEE ABOVE		

BRIDGE NO. 34-0006 L/R
KM POST 12.8
POST MILE
CU 0425 I
EA 012081

ORIGINAL SCALE IN CENTIMETERS FOR REDUCED PLANS 0 1 2 3 4 5 6 7 8 9 10

SAN FRANCISCO OAKLAND BAY BRIDGE
EAST SPAN SEISMIC SAFETY PROJECT

YBI TRANSITION STRUCTURES

LOG OF TEST BORINGS NO. 1

DISREGARD PRINTS BEARING EARLIER REVISION DATES → REVISION DATES (PRELIMINARY STAGE ONLY)

SHEET 25 OF 65

SOIL AND ROCK TYPES

Well graded GRAVEL (GW)
Poorly graded GRAVEL (GP)
GRAVEL, with fines (GP or GW)
GRAVEL, with clay (GP or GW)
Clayey GRAVEL (GC)
GRAVEL, with silt (GP or GW)
Silty GRAVEL (GM)
Well graded SAND (SW)
Poorly graded SAND (SP)
SAND with gravel (SP or SW)
SAND with clay (SP-SC)
Clayey SAND (SC)
Silty SAND (SM)
SAND with silt (SP-SM)
Fat CLAY (CH)
Sandy lean CLAY (CL)
Lean CLAY (CL)
Sandy lean CLAY (CL)
Silty CLAY (CL-ML)
Elastic SILT (MH)
SILT (ML)
Sandy SILT (ML)
Clayey silt (MH-CL)
Highly plastic ORGANICS (OH)
Low plasticity ORGANICS (OL)
SANDSTONE (SS)
SILTSTONE (SS)
CLAYSTONE (SS)
Interbedded Rock Strata (SS)
PAVEMENT

SAMPLERS

76mm-OD, 72mm-ID Thin Walled Tube
87mm-OD, 84mm-ID* Thin Walled Driven Tube
83.8mm-OD, 64mm-ID Cohesionless Liner
76mm-OD, 60mm-ID Modified California Liner
63mm-OD, 35mm-ID SPT Split Spoon Sampler
Rock Core (bead symbol represents recovery (%).

* A variable-OD, 64-mm-ID lacquered driven tube was used in sample coarse sand, gravel and rock.

STANDARD PENETRATION TEST (SPT) AND MODIFIED CALIFORNIA (MC) LINER SAMPLERS

Samplers were driven with a 63.5 kg hammer dropped approximately 760 mm.

30	Number of blows to produce 30 cm of penetration after the initial 15 cm of seating.
35/28cm	Number of blows required to produce the indicated penetration after an initial 15 cm seating.
Refusal	50 blows produced the indicated penetration during the initial 15 cm interval.

Note: In rock boring, interval recovery(%) /RQD are shown in the Blow Count column.

TUBE AND OFFSHORE LINER SAMPLERS

WOH	Offshore Liner sample advanced with the weight of an 80 kg hammer.
PUSH or SAVE	Pushed thin-walled 76mm-OD tube.
15/45cm	Number of blows required to produce the indicated penetration using a 64mm-ID tube sampler. The sampler was driven with an 80 kg downhole hammer dropped approximately 1.8 m.

CLASSIFICATION TESTS BLOW COUNTS AND ROCK QUALITY

- P: PERCENT PASSING #200 SIEVE
- w: WATER CONTENT (%)
- D: UNIT WEIGHT (KN/m³)
- O: THERIOTICAN UNIT WEIGHT (KN/m³)
- PLASTIC LIMIT / LIQUID LIMIT
- N: EQUIVALENT SPT BLOW COUNT (MC BLOWCOUNT/1.2 OR SPT BLOWCOUNT)
- RQD: ROCK QUALITY DESIGNATION (RQD)
- REC: ROCK RECOVERY PERCENT
- RCR: ROCK CORING RATE

STRENGTH TESTS

- POCKET PENETROMETER
- TORVANE
- REMOTE VANE
- MINIATURE VANE (a: RESIDUAL VANE)
- UNCONSOLIDATED UNDRAINED TRIAXIAL
- SWEDISH FALL CONE
- UNCONFINED COMPRESSION (SOIL)
- QA: Qmax explained (private consultant tests)
- Shear Strength interpreted from CPT Tip Resistance (Nk = 12-15)
- POINT LOAD TEST (ROCK-INTACT SPECIMEN)
- POINT LOAD TEST (ROCK-ALONG WEAK PLANE)
- UNCONFINED COMPRESSION (ROCK)
- Shr. Strength Exceeds Capacity of Measuring Device
- Rock Sample broke along discontinuity; Intact sample would have greater strength
- FRACTURE DENSITY (ROCK)

STRENGTH OF COHESIVE SOILS

Consistency	Undrained Shear Strength kPa
Very Soft	less than 12
Soft	12 to 25
Firm	25 to 50
Stiff	50 to 100
Very Stiff	100 to 200
Hard	greater than 200

DENSITY OF GRANULAR SOILS

Descriptive Term	Relative Density (%)*
Very Loose	less than 15
Loose	15 to 35
Medium Dense	35 to 65
Dense	65 to 85
Very Dense	greater than 85

*Estimated from laboratory driving record and CPT tip resistance.

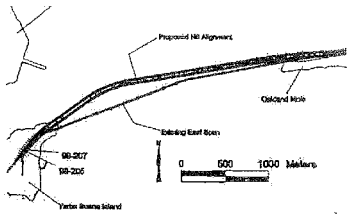

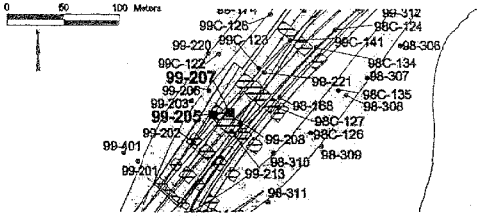

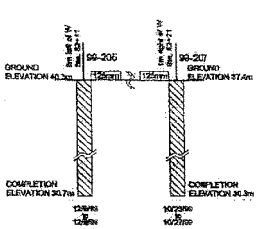

Metric

DIST	COUNTY	ROUTE	KILOMETER POST / TOTAL PROJECT	SHEET NO.	TOTAL SHEETS
04	SF	80		82	137

REGISTERED GEOTECHNICAL ENGINEER

PLANS APPROVAL DATE

REGISTERED PROFESSIONAL ENGINEER MIKE KAPUSKAR No. GE 2561 Exp. 12-31-06 GEOTECHNICAL STATE OF CALIFORNIA

FUGRO-EARTH MECHANICS, A JOINT VENTURE, 770L Edgewater Dr., Ste. 848, Oakland, CA 94621 (510) 562-3033, FAX (510) 562-8868

The State of California or its officers or agents shall not be responsible for the accuracy or completeness of electronic copies of this plan sheet.

BORING 99-205

COORDINATES: E1635945 N647237
CA State Plane Zone 3, NAD83, Meters
GROUND ELEVATION: 40.3m (MSL)
START DATE: 12/8/99

STATION: 9m left of W Sta. 82+11
COMPLETION ELEVATION: 30.7m (MSL)
END DATE: 12/8/99

DEPTH (m)	ELEVATION (m)	SOIL TYPE	SAMPLER	BLOW COUNT	MATERIAL DESCRIPTION	STRATUM NO.
					GROUND ELEVATION: 40.3m (MSL)	(0.0m)
1	39			7	SAND DEPOSITS (Qs) Silty Fine SAND (SM), loose, dark brown, dry	I
2	38			20	-medium dense, below 1.8m	
3	37			19		(3.9m)
4	36			82	SEDIMENTARY DEPOSITS (Qs) Silty Fine SAND (SM), medium dense to very dense, brown, damp	
5	35				-very dense at 3.5m	
6	34			38	-medium dense at 5.0m	
7	33			46	-dense at 6.8m	II
8	32			27	-medium dense, below 7.9m	
9	31			17		
10	30				TOTAL DEPTH: 9.8m BACKFILLED WITH: Cement Grout	

CORING RATE (Min./m)
ID TEST BARREL RECOVERY (%) / BLOW COUNTS
ROCK UNCONFINED COMPRESSIVE STRENGTH (MPa)
UNIT WEIGHT (kN/m³)

FRACTURE DENSITY (Fract./m)
SOIL UNDRAINED SHEAR STRENGTH (kPa)

BORING 99-207

COORDINATES: E1636569 N647237
CA State Plane Zone 3, NAD83, Meters
GROUND ELEVATION: 37.4m (MSL)
START DATE: 10/25/99

STATION: 1m right of W Sta. 82+21
COMPLETION ELEVATION: 30.3m (MSL)
END DATE: 10/27/99

DEPTH (m)	ELEVATION (m)	SOIL TYPE	SAMPLER	BLOW COUNT	MATERIAL DESCRIPTION	STRATUM NO.
					GROUND ELEVATION: 37.4m (MSL)	
0	37				SAND DEPOSITS (Qs)	(0.0m)
1	36			9	Silty Fine SAND (SM), loose, grayish brown, dry -with some rocks	I
2	35			16	-yellowish brown, below 1.4m	(2.0m)
3	34			41	SEDIMENTARY DEPOSITS (Qs)	
4	33			23	Silty Fine SAND (SM), medium dense to dense, yellowish brown, moist	
5	32					
6	31			36		II
7	30					
8	29			46		
9	28			53		
10	27				TOTAL DEPTH: 9.2m BACKFILLED WITH: Cement Grout	

CORING RATE (Min./m)
ID TEST BARREL RECOVERY (%) / BLOW COUNTS
ROCK UNCONFINED COMPRESSIVE STRENGTH (MPa)
UNIT WEIGHT (kN/m³)

FRACTURE DENSITY (Fract./m)
SOIL UNDRAINED SHEAR STRENGTH (kPa)

CONTRACT CHANGE ORDER NO. 73
SHEET 73a OF 73a

ROBERT PRICE / SABA MOHAN (GEOTECHNICAL DESIGN OVERSIGHT)	DRAWN BY	A.BROUGHTON	E. LIN (FIELD INVESTIGATOR)	PREPARED FOR THE STATE OF CALIFORNIA DEPARTMENT OF TRANSPORTATION	M. KAPUSKAR (PROJECT ENGINEER)
	CHECKED BY	M. KAPUSKAR, S. VARATHARAJ	DATE: SEE ABOVE		

ORIGINAL SCALE IN CENTIMETERS 0 1 2 3 4 5 6 7 8 9 10
FOR REDUCED PLANS

CU 04251
EA 012051

SAN FRANCISCO OAKLAND BAY BRIDGE
EAST SPAN SEISMIC SAFETY PROJECT

YBI TRANSITION STRUCTURES

LOG OF TEST BORINGS NO. 2

BRIDGE NO.	ROUTE	PM POST	PM AHEAD
34-0008 L/R	80	12.8	

DISREGARD PRINTS BEARING EARLIER REVISION DATES →

REVISION DATES (PRELIMINARY STAGE ONLY)

SHEET	OF
26	65

SOIL AND ROCK TYPES

SAMPLERS

STANDARD PENETRATION TEST (SPT) AND MODIFIED CALIFORNIA (MC) LINER SAMPLERS

TUBE AND OFFSHORE LINER SAMPLERS

CLASSIFICATION TESTS, BLOW COUNTS AND ROCK QUALITY

STRENGTH TESTS

STRENGTH OF COHESIVE SOILS

DENSITY OF GRANULAR SOILS

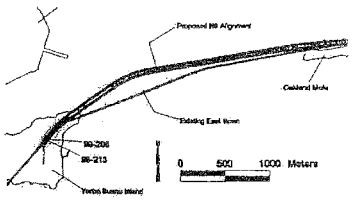

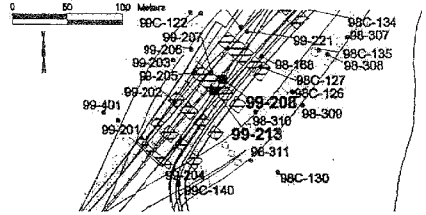

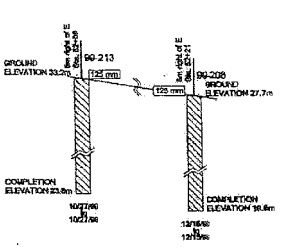

Metric

DIST	COUNTY	ROUTE	KILOMETER POST / TOTAL PROJECT	SHEET NO.	TOTAL SHEETS
04	SF	80		83	137

REGISTERED GEOTECHNICAL ENGINEER

PLANS APPROVAL DATE

No. GE 2564 Exp. 12-31-05 — REGISTERED PROFESSIONAL ENGINEER — JOSE KAPUSKAR — GEOTECHNICAL — STATE OF CALIFORNIA

FUGRO-EARTH MECHANICS, A JOINT VENTURE, 7700 Edgewater Dr., Ste. 845, Oakland, CA 94621 (510) 562-8833, FAX (510) 562-8956

The State of California or its officers or agents shall not be responsible for the accuracy or completeness of electronic copies of this plan sheet.

BORING 99-213

COORDINATES: E1838801 N647221
CA State Plane Zone 3, NAD83, Meters
GROUND ELEVATION: 33.2m (MSL)
START DATE: 10/27/98

STATION: 6m right of E Sta. 52+08
COMPLETION ELEVATION: 23.6m (MSL)
END DATE: 10/27/98

DEPTH (m)	SOIL ELEVATION (m)	SOIL TYPE	SAMPLER TYPE	BLOW COUNT	MATERIAL DESCRIPTION	STRATUM NO.
					GROUND ELEVATION: 33.2m (MSL)	
0	33			0	SAND DEPOSITS (Qe)	
1	32			7	-Silty Fine SAND (SM), loose, yellowish brown, dry	I
2	31				-with abundant roots	
					(2.3m)	
3	30			37	SEDIMENTARY DEPOSITS (Qe)	
4	29			58	Silty Fine SAND (SM), dense, yellowish brown, dry	
5	28				-with roots, to 4.0m	
6	27			82		
7	26				-fine sand with silt, at 4.3m	II
8	25			27		
9	24			36		
10	23			34	-silty fine to medium sand at 9.1m	
11	22				TOTAL DEPTH: 9.8m BACKFILLED WITH: Cement Grout	
12	21					
13	20					
14	19					
15	18					
16	17					
17	16					
18	15					
19	14					
20	13					
21	12					
22	11					
23	10					
24	9					

CORING RATE (Min/m)
ID TESTS/RQD/RECOVERY/DD
EQ. BLOW COUNTS
UNIT WEIGHT (kN/m³)

FRACTURE DENSITY (Fres/m)
ROCK UNCONFINED COMPRESSIVE STRENGTH (MPa)
SOIL UNDRAINED SHEAR STRENGTH (kPa)

BORING 99-208

COORDINATES: E1839069 N647229
CA State Plane Zone 3, NAD83, Meters
GROUND ELEVATION: 27.7m (MSL)
START DATE: 12/15/98

STATION: 6m right of E Sta. 52+21
COMPLETION ELEVATION: 10.6m (MSL)
END DATE: 12/15/98

DEPTH (m)	SOIL ELEVATION (m)	SOIL TYPE	SAMPLER TYPE	BLOW COUNT	MATERIAL DESCRIPTION	STRATUM NO.
					GROUND ELEVATION: 27.7m (MSL)	
0	28					
1	27			6	SAND DEPOSITS (Qe)	
2	26				-Silty Fine SAND (SM), loose, brown, dry	I
					(1.6m)	
3	25			29	SEDIMENTARY DEPOSITS (Qe)	
4	24			61	Silty Fine to Medium SAND (SM), very dense, yellowish brown, dry	
5	23			62	-silty fine sand, medium dense, to 2.3m	
6	22					
7	21			50/14cm		II
8	20			50/23cm		
9	19			74	-fine sand with silt at 7.8m	
10	18				TOTAL DEPTH: 8.1m BACKFILLED WITH: Cement Grout	
11	17					
12	16					
13	15					
14	14					
15	13					
16	12					
17	11					
18	10					
19	9					
20	8					

CORING RATE (Min/m)
ID TESTS/RQD/RECOVERY/DD
EQ. BLOW COUNTS
UNIT WEIGHT (kN/m³)

FRACTURE DENSITY (Fres/m)
ROCK UNCONFINED COMPRESSIVE STRENGTH (MPa)
SOIL UNDRAINED SHEAR STRENGTH (kPa)

CONTRACT NO. 04-012024
CONTRACT CHANGE ORDER NO. T-2
SHEET 27 OF 254

ROBERT PRICE / SABA MOHAN	DRAWN BY	A.BROUGHTON	E. LIN	PREPARED FOR THE STATE OF CALIFORNIA DEPARTMENT OF TRANSPORTATION	M. KAPUSKAR	BRIDGE NO. 34-0006 L/R
DESIGN MANAGER, DESIGN OVERSIGHT	CHECKED BY	M. KAPUSKAR, S. VARATHARAJ	FIELD INVESTIGATION DATE SEE ABOVE		PROJECT ENGINEER	KM POST 12.6
						POST MILE

SAN FRANCISCO OAKLAND BAY BRIDGE
EAST SPAN SEISMIC SAFETY PROJECT

YBI TRANSITION STRUCTURES

LOG OF TEST BORINGS NO. 3

ORIGINAL SCALE IN CENTIMETERS FOR REDUCED PLANS 0 1 2 3 4 5 6 7 8 9 10

CU 042S1
EA 012051

DISREGARD PRINTS BEARING EARLIER REVISION DATES →

REVISION DATES (PRELIMINARY STAGE ONLY)

SHEET 27 OF 65

SOIL AND ROCK TYPES

Well graded GRAVEL (GW) | Poorly graded GRAVEL (GP) | GRAVEL with some fines (GP or GW) | GRAVEL with clay (GP or GW) | Clayey GRAVEL (GC) | GRAVEL with silt (GP or GW) | Silty GRAVEL (GM) | Well graded SAND (SW) | Poorly graded SAND (SP) | SAND with gravel (SP or SW) | SAND with clay (SP-SC) | Clayey SAND (SC) | Silty SAND (SM) | SAND with silt (SW-SM) | Fat CLAY (CH) | Sandy fat CLAY (CH) | Lean CLAY (CL) | Sandy lean CLAY (CL) | Silty CLAY (CL-ML) | Elastic SILT (MH) | SILT (ML) | Sandy SILT (ML) | Clayey silt (ML/CL) | Highly plastic ORGANICS (OH) | Low plasticity ORGANICS (OL) | SANDSTONE (Ss) | SILTSTONE (Ss) | CLAYSTONE (Ss) | Interbedded Rock Strata (Rx) | PAVEMENT

SAMPLERS

76mm-OD, 72mm-ID Thin Walled Tube | 76mm-OD, 60mm-ID Modified California Liner | 67mm-OD, 64mm-ID* Thin Walled Driven Tube | 61mm-OD, 58mm-ID SPT Split Spoon Sampler | 92.85mm-OD, 84mm-ID Diamond Liner | Rock Core (insert symbol) recreations recovery (%)

* A variable-OD, 64-mm-ID beveled driven tube was used to sample coarse sand, gravel and rock

STANDARD PENETRATION TEST (SPT) AND MODIFIED CALIFORNIA (MC) LINER SAMPLERS

Samplers were driven with a 63.5 kg hammer dropped approximately 760 mm.

20 — Number of blows to produce 30 cm of penetration after the initial 15 cm of seating.

MC/8cm — Number of blows recorded to produce the indicated penetration after an initial 15 cm seating.

8x60cm — 60 blows produced the indicated penetration during the initial 15 cm interval.

Note: In rock coring, interval recovery (%) / RQD are shown in the Blow Count column.

TUBE AND OFFSHORE LINER SAMPLERS

WOH — Offshore Liner sample advanced with the weight of an 40 kg hammer.

PUSH or SWVE — Pushed fish-walled 76mm-OD tube.

18/8Core — Number of blows required to produce the indicated penetration using a 64-mm-ID-tube sampler. The sampler was driven with an 80 kg downhole hammer dropped approximately 1.8 m.

CLASSIFICATION TESTS BLOW COUNTS AND ROCK QUALITY

- PERCENT PASSING #200 SIEVE
- WATER CONTENT (%)
- UNIT WEIGHT (pcf)
- THEORETICAL UNIT WEIGHT (pcf)

PLASTIC LIMIT — LIQUID LIMIT

- EQUIVALENT SPT BLOW COUNT = (MC BLOWCOUNT)*.6 OR SPT BLOWCOUNT
- ROCK QUALITY DESIGNATION (RQD)
- ROCK RECOVERY PERCENT
- ROCK CORING RATE

STRENGTH TESTS

- POCKET PENETROMETER
- TORVANE
- RESISTIVE VANE
- MINIATURE VANE (P. RESILON, VANE)
- UNCONSOLIDATED UNDRAINED TRIAXIAL
- SWEDISH FALL CONE
- UNCONFINED COMPRESSION (ROCK)

Cu (Open symbols indicate remolded tests)

- Shear Strength Kennedy of Measuring Device
- CPT tip Resistance (qc) = 12-19

- POINT LOAD TEST (ROCK-INTACT SPECIMEN)
- POINT LOAD TEST (ROCK-ALONG WEAK PLANE)
- UNCONFINED COMPRESSION (ROCK)
- Bulk Strength Kennedy Capacity of Measuring Device. Rock Sample broke after circumferentially; bond strength would have greater strength.
- FRACTURE DENSITY (ROCK)

STRENGTH OF COHESIVE SOILS

Consistency	Undrained Shear Strength, kPa
Very Soft	less than 12
Soft	12 to 25
Firm	25 to 50
Stiff	50 to 100
Very Stiff	100 to 200
Hard	greater than 200

DENSITY OF GRANULAR SOILS

Descriptive Term	Relative Density (%)*
Very Loose	less than 15
Loose	15 to 35
Medium Dense	35 to 65
Dense	65 to 85
Very Dense	greater than 85

*Estimated from sampler driving record and CPT tip resistance.

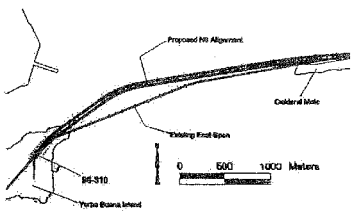

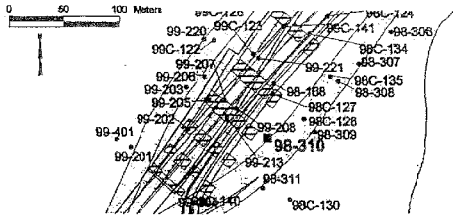

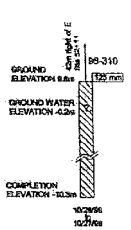

Metric

DIST	COUNTY	ROUTE	KILOMETER POST TOTAL PROJECT	SHEET NO.	TOTAL SHEETS
04	SF	80		84	137

REGISTERED GEOTECHNICAL ENGINEER

PLANS APPROVAL DATE

REGISTERED PROFESSIONAL ENGINEER — MIKE KAPUSKAR — No. GE 2241 Exp. 12-31-00 — GEOTECHNICAL — STATE OF CALIFORNIA

FUGRO-EARTH MECHANICS, A JOINT VENTURE
7700 Edgewater Dr., Ste. 840
Oakland, CA 94621
(510) 562-9833, FAX (510) 562-9868

The State of California or its officers or agents shall not be responsible for the accuracy or completeness of electronic copies of this plan sheet.

BORING 98-310

COORDINATES: E1839997 N647202
CA State Plane Zone 3, NAD83, Meters
GROUND ELEVATION: 8.6m (MSL)
START DATE: 10/29/98

STATION: 42m right of E Sta. 62+11
COMPLETION ELEVATION: -10.3m (MSL)
END DATE: 10/27/98

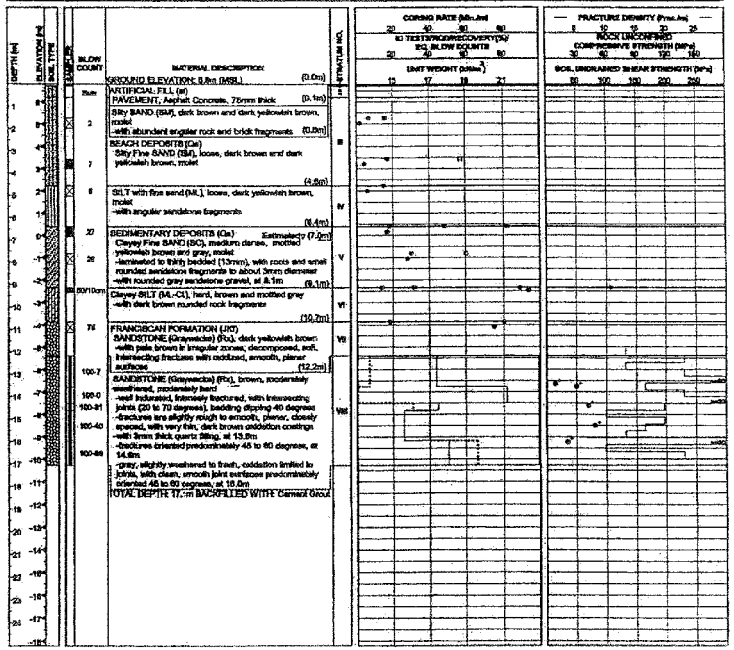

CONTRACT NO. 04-0K2404

CONTRACT CHANGE ORDER NO. 72

SHEET 224 OF 2200

ROBERT PRICE / SABA MOHAN	DRAWN BY	A.BROUGHTON	S.SCHELL	PREPARED FOR THE STATE OF CALIFORNIA DEPARTMENT OF TRANSPORTATION	M. KAPUSKAR
	CHECKED BY	S.MOHANO, S.VARATHARAJ	DATE SEE ABOVE		

ORIGINAL SCALE IN CENTIMETERS FOR REDUCED PLANS 0 1 2 3 4 5 6 7 8 9 10

CU 0425 / EA 012051

BRIDGE NO.	34-0006 L/R
KM POST	12.8
POST MILE	

SAN FRANCISCO OAKLAND BAY BRIDGE
EAST SPAN SEISMIC SAFETY PROJECT

YBI TRANSITION STRUCTURES

LOG OF TEST BORINGS NO. 4

DISREGARD PRINTS BEARING EARLIER REVISION DATES →

REVISION DATES (PRELIMINARY STAGE ONLY)	SHEET	OF
	28	85

SOIL AND ROCK TYPES

Well graded GRAVEL (GW)
Poorly graded GRAVEL (GP)
GRAVEL with sand (GP or GW)
GRAVEL with clay (GP or GW)
Clayey GRAVEL (GC)
GRAVEL with silt (GP or GW)
Silty GRAVEL (GM)
Well graded SAND (SW)
Poorly graded SAND (SP)
SAND with gravel (SP or SW)
SAND with clay (SP-SC)
Clayey SAND (SC)
Silty SAND (SM)
SAND with silt (SP-SM)
Fat CLAY (CH)
Sandy fat CLAY (CH)
Lean CLAY (CL)
Sandy lean CLAY (CL)
Silty CLAY (CL-ML)
Elastic SILT (MH)
Sandy SILT (MH)
SILT (ML)
Clayey silt (ML/CL)
Highly plastic ORGANICS (OH)
Low plasticity ORGANICS (OL)
SANDSTONE (Ss)
SILTSTONE (Sh)
CLAYSTONE (Sh)
Interbedded Rock Strata (Sh)
PAVEMENT

SAMPLERS

76mm-OD, 72mm-ID Thin Walled Tube
76mm-OD, 72mm-ID Modified California Liner
76mm-OD, 72mm-ID Thin Walled Driven Tube
76mm-OD, 72mm-ID SPT Split Barrel Sampler
63.5mm-OD, 54mm-ID Diamond Core
Rock Core (inset symbol represents recovery (%))

* A variable OD, 84-mm ID tapered driven tube was used to sample coarse sand, gravel and rock

STANDARD PENETRATION TEST (SPT) AND MODIFIED CALIFORNIA (MC) LINER SAMPLERS

Sampler was driven with a 65.8 kg hammer dropped approximately 760 mm.

20 — Number of blows to produce 30 cm of penetration after the initial 15 cm of seating.

50/25cm — Number of blows required to produce the indicated penetration after an initial 15 cm seating.

Refusal — 50 blows produced the indicated penetration during the initial 15 cm interval.

Note: In rock coring interval recovery(%) / RQD are shown in the Blow Count column.

TUBE AND OFFSHORE LINER SAMPLERS

WOH — Offshore Liner sample advanced with the weight of an 80 kg hammer.

PUSH or SAMPLE — Pushed thin-walled 76mm-OD tube.

15/60cm — Number of blows required to produce the indicated penetration using a 64mm-ID tube sampler. The sample was driven with an 80 kg downhole hammer dropped approximately 1.5 m.

CLASSIFICATION TESTS BLOW COUNTS AND ROCK QUALITY

- PERCENT PASSING #200 SIEVE
- WATER CONTENT (%)
- □ UNIT WEIGHT (pcf)
- ○ THEORETICAL UNIT WEIGHT (pcf)
- PLASTIC LIMIT
- LIQUID LIMIT
- EQUIVALENT SPT-BLOW COUNT = (MC BLOWCOUNT/1.8) OR SPT BLOWCOUNT
- ROCK QUALITY DESIGNATION (RQD)
- ROCK RECOVERY PERCENT
- ROCK BORING RATE

STRENGTH TESTS

- POCKET PENETROMETER
- TORVANE
- REMOLDE VANE
- MINIATURE VANE (R: RESIDUAL VANE)
- UNCONSOLIDATED UNDRAINED TRIAXIAL
- SWEDISH FALL CONE
- UNCONFINED COMPRESSION (UCK)
- Qu (Open symbols indicate remolded tests)
- Shear Strength Interpreted from CPT Tip Resistance (Qt = 12-16)
- POINT LOAD TEST (ROCK-INTACT SPECIMEN)
- POINT LOAD TEST (ROCK ALONG WEAK PLANE)
- UNCONFINED COMPRESSION (ROCK)
- Soil Strength Estimated Degree of Interlocking Rock: Breaks across discontinuity. Intact sample failed from greater strength.
- FRACTURE DENSITY (FD/3ft)

STRENGTH OF COHESIVE SOILS

Consistency	Undrained Shear Strength, kPa
Very Soft	less than 12
Soft	12 to 25
Firm	25 to 50
Stiff	50 to 100
Very Stiff	100 to 200
Hard	greater than 200

DENSITY OF GRANULAR SOILS

Descriptive Term	Relative Density (%)*
Very Loose	less than 15
Loose	15 to 35
Medium Dense	35 to 65
Dense	65 to 85
Very Dense	greater than 85

*Estimated from sampler driving record and CPT tip resistance.

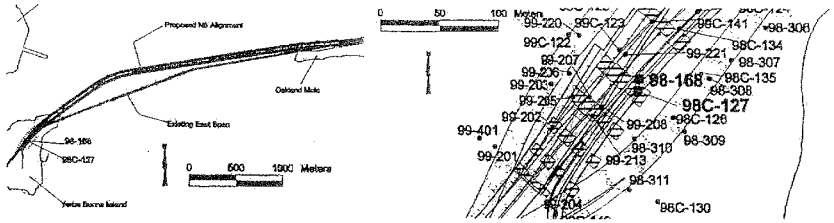

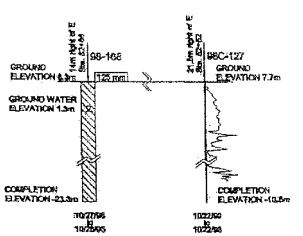

Metric

DIST	COUNTY	ROUTE	KILOMETER POST TOTAL PROJECT	SHEET NO.	TOTAL SHEETS
04	SF	80		85	137

REGISTERED GEOTECHNICAL ENGINEER

PLANS APPROVAL DATE

REGISTERED PROFESSIONAL ENGINEER — SHRE KAPUSKAR — No. GE 2584 Exp. 12-31-06 — GEOTECHNICAL — STATE OF CALIFORNIA

FUGRO-EARTH MECHANICS, A JOINT VENTURE, 7700, Edgewater Dr., Ste. 648, Oakland, CA 94621 (510) 483-8833, FAX (510) 562-8856

The State of California or its officers or agents shall not be responsible for the accuracy or completeness of electronic copies of this plan sheet.

BORING 98-168

COORDINATES: E1636003 N647261
CA State Plane Zone 3, NAD83, Meters
GROUND ELEVATION: 8.3m (MSL)
START DATE: 10/27/98

STATION: 14m right of E Sta. 52+66
COMPLETION ELEVATION: -23.3m (MSL)
END DATE: 10/28/98

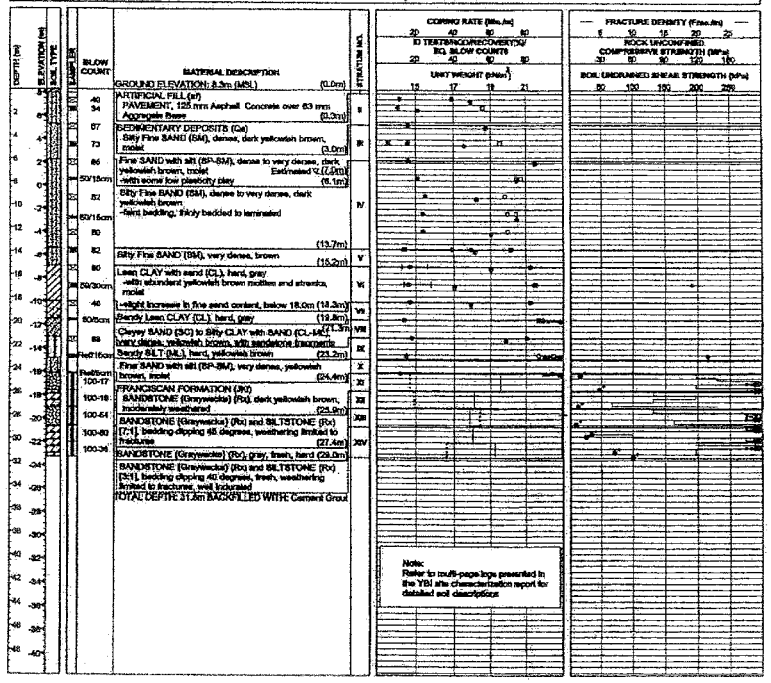

CPT 98C-127

COORDINATES: E1636002 N647342
CA State Plane Zone 3, NAD83, Meters
GROUND ELEVATION: 7.7m (MSL)
START DATE: 10/22/98

STATION: 21.8m right of E Sta. 52+52
COMPLETION ELEVATION: -10.5m (MSL)
CONE END AREA: 15.00 sq. cm
(Area Ratio = 0.65)

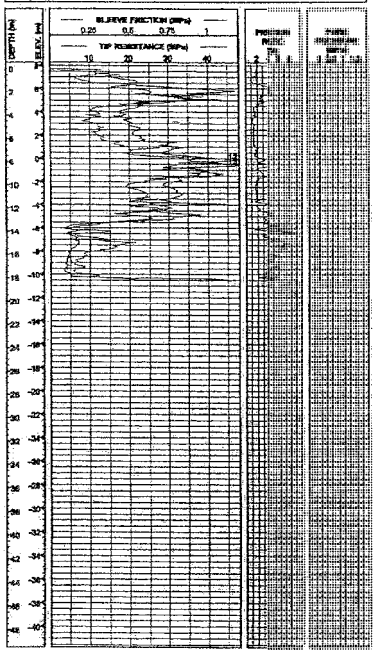

CONTRACT NO. 04-012004

CONTRACT CHANGE ORDER NO. 73

SHEET 228 OF 230

ROBERT PRICE / BABA MOHAN — GEOTECHNICAL DESIGN EXPERT	DRAWN BY	J. PALMER	B. SCHELL — FIELD INVESTIGATION — DATE SEE ABOVE	PREPARED FOR THE STATE OF CALIFORNIA DEPARTMENT OF TRANSPORTATION
	CHECKED BY	M. KAPUSKAR, R. JIE, S. SICILIANO, B. VARATHARAJ	M. KAPUSKAR — PROJECT ENGINEER	BRIDGE NO. 34-0008 L/R; KM POST 12.8; PORT MILE

SAN FRANCISCO OAKLAND BAY BRIDGE EAST SPAN SEISMIC SAFETY PROJECT

YBI TRANSITION STRUCTURES

LOG OF TEST BORINGS NO. 5

ORIGINAL SCALE IN CENTIMETERS FOR REDUCED PLANS 0 1 2 3 4 5 6 7 8 9 10

CU 042S1
EA 012051

DISREGARD PRINTS BEARING EARLIER REVISION DATES →

REVISION DATES (PRELIMINARY STAGE ONLY)	SHEET	OF
	29	65

SOIL AND ROCK TYPE

- Well graded GRAVEL (GW)
- Poorly graded GRAVEL (GP)
- GRAVEL with sand (GP or GW)
- GRAVEL with clay (GP or GW)
- Clayey GRAVEL (GC)
- GRAVEL with silt (GP or GW)
- Silty GRAVEL (GM)
- Well graded SAND (SW)
- Poorly graded SAND (SP)
- SAND with gravel (SP or SW)
- SAND with clay (SP-SC)
- Clayey SAND (SC)
- Silty SAND (SM)
- SAND with silt (SP-SM)
- Fat CLAY (CH)
- Sandy lean CLAY (CL)
- Lean CLAY (CL)
- Sandy lean CLAY (CL)
- Silty CLAY (CL-ML)
- Sandy SILT (ML)
- SILT (ML)
- Sandy SILT (ML)
- Clayey silt (ML/CL)
- Highly plastic ORGANICS (OH)
- Low plasticity ORGANICS (OL)
- SANDSTONE (Ss)
- SILTSTONE (Ms)
- CLAYSTONE (Cs)
- Interbedded Rock Strata (Ss)
- PAVEMENT

SAMPLERS

- 76 mm OD, 72mm ID Thin Walled Tube
- 76mm OD, 60mm ID Modified California Liner
- 87mm OD, 84mm ID* Thin Walled Drivert Tube
- 61 mm OD, 35 mm ID SPT Split Spoon Sampler
- 65.5mm OD, 54mm ID Dilatometer Liner
- Rock Core (Insert symbol) Represents recovery (%)

* A variable-OD, 84-mm-ID beveled shoem tube was used to sample cobbles and, gravel and rock.

STANDARD PENETRATION TEST (SPT) AND MODIFIED CALIFORNIA (MC) LINER SAMPLERS

Samplers were driven with a 63.5 kg hammer dropped approximately 760 mm.

- 30 — Number of blows to produce 80 mm of penetration after the initial 15 cm of seating.
- 30/20cm — Number of blows required to produce the indicated penetration after an initial 15 cm seating.
- 5x/5cm — 50 blows produced the indicated penetration during the initial 15 cm interval.

Note: In rock coring, Value and numeral(%)=ROD are shown in the lower Cores column.

TUBE AND OFFSHORE LINER SAMPLERS

- WOH — Offshore Liner sample advanced with the weight of wt. 62 kg hammer.
- PUSH or SAVE — Pushed into undisturbed 76mm-OD tube.
- N/60cm — Number of blows required to produce the indicated penetration using a 64-mm(ID)-tube sampler. The sampler was driven with an 80 kg downhole hammer dropped approximately 1.8 m.

CLASSIFICATION TESTS BLOW COUNTS AND ROCK QUALITY

- #: PERCENT PASSING #200 SIEVE
- w: WATER CONTENT (%)
- γ: UNIT WEIGHT (kN/m³)
- D: THEORETICAL ---: UNIT WEIGHT (PCF)
- PL: PLASTIC LIMIT LL: LIQUID LIMIT
- e: EQUIVALENT SPT BLOW COUNT
  - (MC BLOWCOUNT) (6) OR 60*) BLOWCOUNT
- ----- ROCK QUALITY DESIGNATION (RQD)
- ------ ROCK RECOVERY PERCENT
- ------ ROCK CORE RATE

STRENGTH TESTS

- POCKET PENETROMETER
- TORVANE
- REMOTE VANE
- MINIATURE VANE: fr: RESIDUAL VANE
- UNCONSOLIDATED UNDRAINED TRIAXIAL
- SWEDISH FALL CONE
- UNCONFINED COMPRESSION (SOIL)
- Qu: (Circle symbols indicate standard tests)
- Shear strength interpreted from SPT tip Resistance (qc = 13 tsf)
- POINT LOAD TEST (ROCK) (PERPENDICULAR SPECIMEN)
- POINT LOAD TEST (ROCK) (ALONG WEAK PLANE)
- UNCONFINED COMPRESSION (ROCK)
- dot: Strength Exceeds Capacity of Measuring Device
- Note: Sampled broke along planes of weakness. Intact sample would have greater strength
- FRACTURE DENSITY (ROCK)

STRENGTH OF COHESIVE SOILS
Undrained Shear Strength

Consistency	kPa
Very Soft	less than 12
Soft	12 to 25
Firm	25 to 50
Stiff	50 to 100
Very Stiff	100 to 200
Hard	greater than 200

DENSITY OF GRANULAR SOILS

Descriptive Term	Relative Density (%)*
Very Loose	less than 15
Loose	15 to 35
Medium Dense	35 to 65
Dense	65 to 85
Very Dense	greater than 85

*Estimated from semantic driving record and CPT tip resistance.

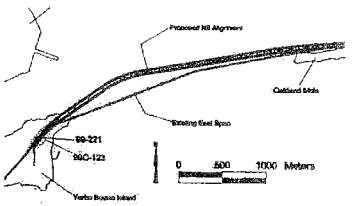

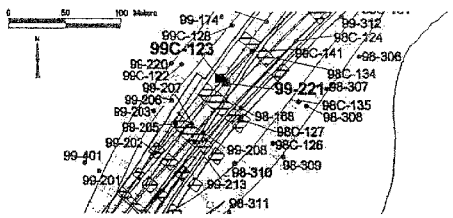

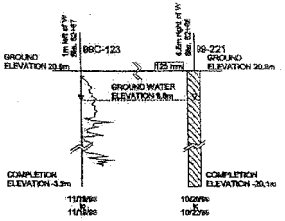

Metric

DIST	COUNTY	ROUTE	KILOMETER POST TOTAL PROJECT	SHEET NO.	TOTAL SHEETS
04	SF	80		86	137

REGISTERED GEOTECHNICAL ENGINEER

PLANS APPROVAL DATE

REGISTERED PROFESSIONAL ENGINEER — BRUCE KAPUSKAR — No. GE 2264 Exp. 12-31-06 — GEOTECHNICAL — STATE OF CALIFORNIA

FUGRO-EARTH MECHANICS, A JOINT VENTURE, 7703 Edgewater Dr., Ste. 840, Oakland, CA 94621 (510) 562-6833, FAX (510) 562-6858

The State of California or its officers or agents shall not be responsible for the accuracy or completeness of electronic copies of this plan sheet.

CPT 99C-123

COORDINATES: E1636986 N647277
CA State Plane Zone 3, NAD83, Meters
GROUND ELEVATION: 20.9m (MSL)
START DATE: 11/19/98

STATION: 1m left of W Sta. 62+67
COMPLETION ELEVATION: -3.2m (MSL)
CONE END AREA: 10.00 sq. cm
(Area Ratio = 0.68)

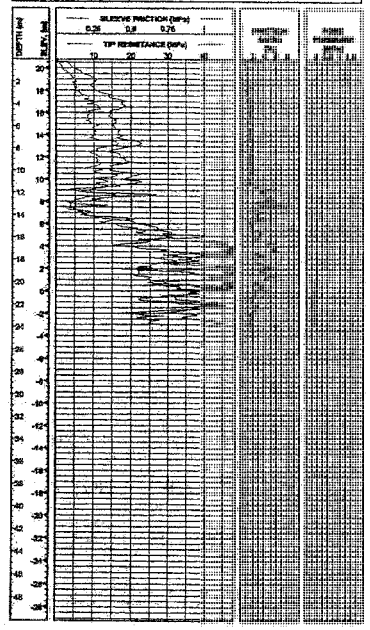

BORING 99-221

COORDINATES: E1636990 N647273
CA State Plane Zone 3, NAD83, Meters
GROUND ELEVATION: 20.8m (MSL)
START DATE: 10/22/98

STATION: 4.5m right of W Sta. 62+66
COMPLETION ELEVATION: -20.1m (MSL)
END DATE: 10/22/98

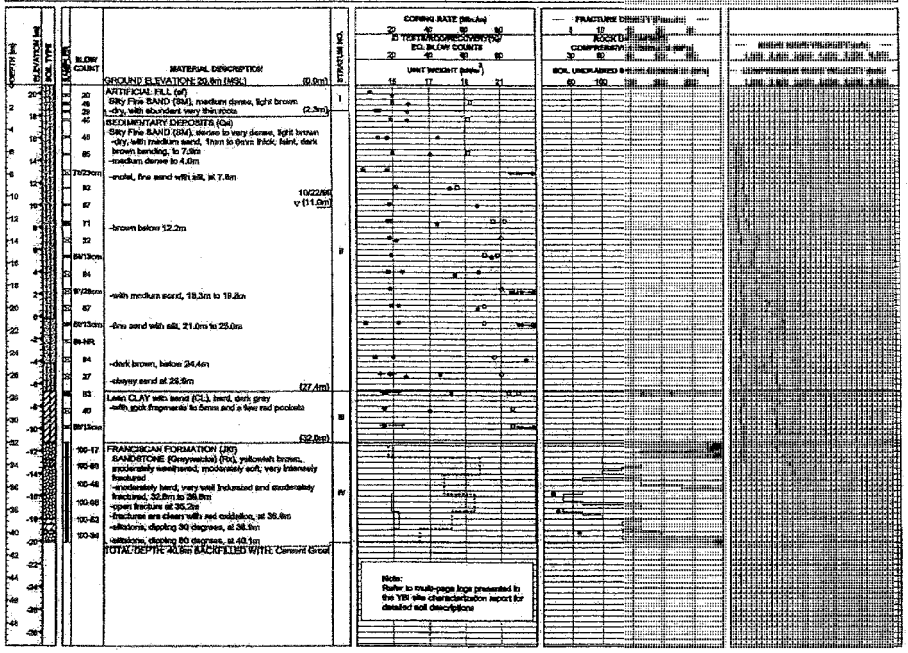

ROBERT PRICE / SAIBA MOHAN	DRAWN BY	A.BROUGHTON	C.PRENTICE, S. SICILIANO	PREPARED FOR THE STATE OF CALIFORNIA DEPARTMENT OF TRANSPORTATION	M. KAPUSKAR	BRIDGE NO.	SAN FRANCISCO OAKLAND BAY BRIDGE EAST SPAN SEISMIC SAFETY PROJECT
GEOTECHNICAL DESIGN OVERSIGHT	CHECKED BY	M. KAPUSKAR, S. VARATHARAJ	FIELD INVESTIGATION DATE SEE ABOVE		PROJECT ENGINEER	34-0006 L/R	YBI TRANSITION STRUCTURES
						KM POST 12.8	LOG OF TEST BORINGS NO. 6
						POST MILE	DISREGARD PRINTS BEARING EARLIER REVISION DATES → REVISION DATES (PRELIMINARY STAGE ONLY) SHEET 30 OF 65

ORIGINAL SCALE IN CENTIMETERS 0 1 2 3 4 5 6 7 8 9 10
FOR REDUCED PLANS

CU 042501
EA 012051

CONTRACT NO. 04-0120Z4
CONTRACT CHANGE ORDER NO. 73
SHEET 330 OF 350

SOIL AND ROCK TYPES

Well graded GRAVEL (GW)
Poorly graded GRAVEL (GP)
GRAVEL with sand (GP or GW)
GRAVEL with clay (GP or GW)
Clayey GRAVEL (GC)
GRAVEL with silt (GP or GW)
Silty GRAVEL (GM)
Well graded SAND (SW)
Poorly graded SAND (SP)
SAND with gravel (SP or SW)
SAND with clay (SP-SC)
Clayey SAND (SC)
Silty SAND (SM)
SAND with silt (SP-SM)
Fat CLAY (CH)
Sandy fat CLAY (CH)
Lean CLAY (CL)
Sandy lean CLAY (CL)
Silty CLAY (CL-ML)
Plastic SILT (MH)
SILT (ML)
Sandy SILT (ML)
Clayey silt (M/CL)
High plastic ORGANICS (OH)
Low plasticity ORGANICS (OL)
SANDSTONE (Ss)
SILTSTONE (Ms)
CLAYSTONE (Cs)
Interbedded Rock Strata (Ms)
PAVEMENT

SAMPLERS

76mm-OD, 72mm-ID Thin Walled Tube
92mm-OD, 84mm-ID Thin Walled Driven Tube
103.5mm-OD, 54 mm-ID Offshore Liner
76mm-OD, 60mm-ID Modified California Liner
91mm-OD, 35mm-ID SPT Split Spoon Sampler
Rock Core (lined symbol represents recovery (%))

* A variable-OD, 54-mm-ID tapered driven tube was used to sample coarse sand, gravel and rock.

STANDARD PENETRATION TEST (SPT) AND MODIFIED CALIFORNIA (MC) LINER SAMPLERS

Samplers were driven with a 63.5 kg hammer dropped approximately 760 mm.

20 — Number of blows to produce 30 cm of penetration after the initial 15 cm of seating.

86/25cm — Number of blows required to produce the indicated penetration after an initial 15 cm seating.

Refl/5cm — 50 blows produced the indicated penetration during the initial 15 cm interval.

Note: In rock coring interval recovery(%)-RQD are shown in the Blow Count column.

TUBE AND OFFSHORE LINER SAMPLERS

WOH — Offshore liner vehicle advanced with the weight of an 80 kg hammer.

PUSH or 8WR — Pushed into sealed 76mm-OD-tube.

15/60cm — Number of blows required to produce the indicated penetration using a 54mm-ID-tube sampler. The sampler was driven with an 80 kg downhole hammer dropped approximately 1.5 m.

CLASSIFICATION TESTS BLOW COUNTS AND ROCK QUALITY

- PERCENT PASSING #200 SIEVE
- WATER CONTENT (%)
- UNIT WEIGHT (pcf/m3)
- THEORETICAL "
- UNIT WEIGHT (pcf/m3)
- PLASTIC LIMIT, LIQUID LIMIT
- EQUIVALENT SPT BLOW COUNT (MC BLOWCOUNT/1.49 OR SPT BLOWCOUNT)
- ROCK QUALITY DESIGNATION (RQD)
- ROCK RECOVERY PERCENT
- ROCK CORING RATE

STRENGTH TESTS

- POCKET PENETROMETER
- TORVANE
- REMOTE VANE
- MINIATURE VANE (p: RESIDUAL VANE)
- UNCONSOLIDATED UNDRAINED TRIAXIAL
- SWEDISH FALL CONE
- UNCONFINED COMPRESSION (SOIL)
- Cu (Cone penetrometer interpreted from)
- Sweet Strength interpreted from CPT Tip Resistance (Nk = 12-15)
- POINT LOAD TEST (ROCK-INTACT SPECIMEN)
- POINT LOAD TEST (ROCK-ALONG WEAK PLANE)
- UNCONFINED COMPRESSION (ROCK)
- Soil: Strength Envelope Capacity of Penetrating Device. Rock: Borehole broke along discontinuities; intact sample would have greater strength
- FRACTURE DENSITY (ROCK)

STRENGTH OF COHESIVE SOILS

Consistency	Undrained Shear Strength kPa
Very Soft	less than 12
Soft	12 to 25
Firm	25 to 50
Stiff	50 to 100
Very Stiff	100 to 200
Hard	greater than 200

DENSITY OF GRANULAR SOILS

Descriptive Term	Relative Density (%)*
Very Loose	less than 15
Loose	15 to 35
Medium Dense	35 to 65
Dense	65 to 85
Very Dense	greater than 85

*Estimated from sampler driving record and CPT tip resistance.

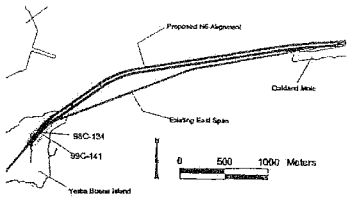

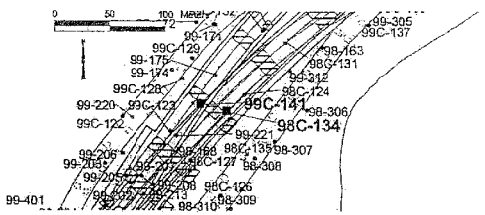

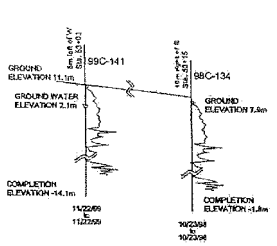

CPT 99C-141

COORDINATES: E1836013 N647381
CA State Plane Zone 3, NAD83, Meters
GROUND ELEVATION: 11.1m (MSL)
START DATE: 11/22/99

STATION: 6m left of W Sta. 53+03
COMPLETION ELEVATION: -14.1m (MSL)
CONE END AREA: 15.00 sq. cm
(Area Ratio = 0.56)

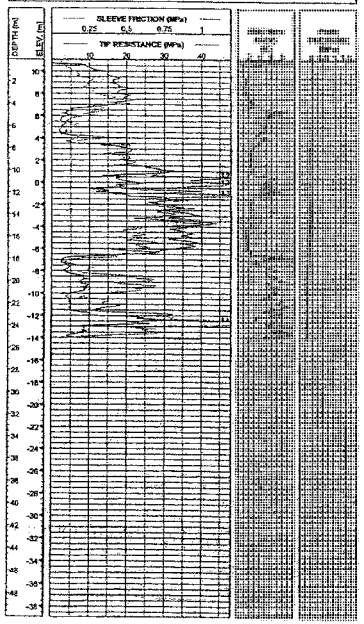

CPT 98C-134

COORDINATES: E1836036 N647285
CA State Plane Zone 3, NAD83, Meters
GROUND ELEVATION: 7.5m (MSL)
START DATE: 10/23/98

STATION: 10m right of E Sta. 53+15
COMPLETION ELEVATION: -1.8m (MSL)
CONE END AREA: 15.00 sq. cm
(Area Ratio = 0.56)

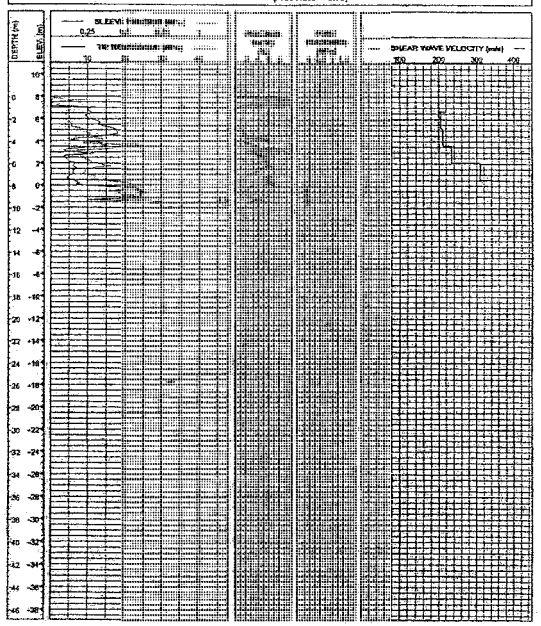

DIST	COUNTY	ROUTE	KILOMETER POST TOTAL PROJECT	SHEET NO.	TOTAL SHEETS
04	SF	80		87	137

REGISTERED GEOTECHNICAL ENGINEER

PLANS APPROVAL DATE

REGISTERED PROFESSIONAL ENGINEER MIKE KAPUSKAR No. GE 2564 Exp. 12-31-00 GEOTECHNICAL STATE OF CALIFORNIA

FUGRO-EARTH MECHANICS, A JOINT VENTURE
7700 Edgewater Dr., Ste. 846
Oakland, CA 94621
(510) 562-8833, FAX (510) 562-8858

The State of California or its officers or agents shall not be responsible for the accuracy or completeness of electronic copies of this plan sheet.

CONTRACT NO. 04-012084

CONTRACT CHANGE ORDER NO 73

SHEET 29 OF 75

ROBERT PRICE / SABA MOHAN
GEOTECHNICAL DESIGN OVERSIGHT

DRAWN BY: A.BROUGHTON
CHECKED BY: M. KAPUSKAR, S. VARATHARAJ

FIELD INVESTIGATOR
DATE: SEE ABOVE

PREPARED FOR THE
STATE OF CALIFORNIA
DEPARTMENT OF TRANSPORTATION

M. KAPUSKAR
PROJECT ENGINEER

ORIGINAL SCALE IN CENTIMETERS FOR REDUCED PLANS 0 1 2 3 4 5 6 7 8 9 10

04 0I 251
EA 012051

BRIDGE NO.	SAN FRANCISCO OAKLAND BAY BRIDGE EAST SPAN SEISMIC SAFETY PROJECT
34-0006 L/R	YBI TRANSITION STRUCTURES
KM POST 12.8	LOG OF TEST BORINGS NO. 7
POST MILE	DISREGARD PRINTS BEARING EARLIER REVISION DATES → REVISION DATES (PRELIMINARY STAGE ONLY)

SHEET 31 OF 65

SOIL AND ROCK TYPES

Well graded GRAVEL (GW)
Poorly graded GRAVEL (GP)
GRAVEL with fines (GP or GW)
GRAVEL with clay (GP or GW)
Clayey GRAVEL (GC)
GRAVEL with silt (GP or GW)
Silty GRAVEL (GM)
Well graded SAND (SW)
Poorly graded SAND (SP)
SAND with gravel (SP or SW)
SAND with clay (SP-SC)
Clayey SAND (SC)
Silty SAND (SM)
SAND with silt (SP-SM)
Fat CLAY (CH)
Sandy fat CLAY (CH)
Lean CLAY (CL)
Sandy lean CLAY (CL)
Silty CLAY (CL-ML)
Elastic SILT (MH)
SILT (ML)
Sandy SILT (ML)
Clayey silt (MCL)
Highly plastic ORGANICS (OH)
Low plasticity ORGANICS (OL)
SANDSTONE (Rs)
SILTSTONE (Rs)
CLAYSTONE (Rs)
Interbedded Rock Strata (Rs)
PAVEMENT

SAMPLERS

76mm-OD, 72mm-ID Thin Walled Tube
87mm-OD, 84mm-ID Thin Walled Driven Tube
63.5mm-OD, 54mm-ID Dietrich Liner
76mm-OD, 60mm-ID Modified California Liner
51mm-OD, 35mm-ID SPT Split Spoon Sampler
Rock Core (used w/core barrel) to maximize recovery (%)

* A variable-OD, 54-mm-ID brazed driven tube was used to sample coarse sand, gravel and rock.

STANDARD PENETRATION TEST (SPT) AND MODIFIED CALIFORNIA (MC) LINER SAMPLERS

Samplers were driven with a 63.5 kg hammer dropped approximately 760 mm.

29 — Number of blows to produce 30 cm of penetration after the initial 15 cm of seating.

25/23cm — Number of blows required to produce the indicated penetration after an initial 15 cm seating.

R/50cm — 50 blows produced the indicated penetration during the initial 15 cm interval.

Note: In rock coring, interval recovery(%)-RQD are shown in the 2nd or 3rd Count column.

TUDE AND OFFSHORE LINER SAMPLERS

WON — Offshore Liner sample advanced with the weight of an 82 kg hammer.

PUSH or SAW — Pushed thin-walled 76mm OD tube.

15/60cm — Number of blows required to produce the indicated penetration using a 2.4mm ID tube sampler. The sampler was driven with an 80 kg downhole hammer dropped approximately 1.5 m.

CLASSIFICATION TESTS BLOW COUNTS AND ROCK QUALITY

- PERCENT PASSING #200 SIEVE
- WATER CONTENT (%)
- UNIT WEIGHT (KN/m³)
- THEORETICAL / UNIT WEIGHT (KN/m³)
- PLASTIC LIMIT, LIQUID LIMIT
- EQUIVALENT SPT BLOW COUNT
- (MC BLOW COUNTS ADJUSTED FOR SPT BLOW COUNT)
- ROCK QUALITY DESIGNATION (RQD)
- ROCK RECOVERY PERCENT
- ROCK CORING RATE

STRENGTH TESTS

- POCKET PENETROMETER
- TORVANE
- REMOTE VANE
- MINIATURE VANE (= RESIDUAL VANE)
- UNCONSOLIDATED UNDRAINED TRIAXIAL
- SWEDISH FALL CONE
- UNCONFINED COMPRESSION (UCS)
- (Open symbols indicate remolded tests)
- Shear Strength Interpreted from CPT Tip Resistance (qc = 13 tsf)
- POINT LOAD TEST (PERPENDICULAR SPECIMEN)
- POINT LOAD TEST (PERPENDICULAR WEAK PLANE)
- UNCONFINED COMPRESSION (ROCK)
- Soil Strength Exceeds Capacity of Penetrating Device
- Rock: Sample broke along discontinuity, Intact sample would have greater strength
- FRACTURE DENSITY (ROCK)

STRENGTH OF COHESIVE SOILS

Consistency	Undrained Shear Strength, kPa
Very Soft	less than 12
Soft	12 to 25
Firm	25 to 50
Stiff	50 to 100
Very Stiff	100 to 200
Hard	greater than 200

DENSITY OF GRANULAR SOILS

Descriptive Terms	Relative Density (%)*
Very loose	less than 15
Loose	15 to 35
Medium Dense	35 to 65
Dense	65 to 85
Very Dense	greater than 85

*Estimated from sample driving (blows) and CPT tip resistance.

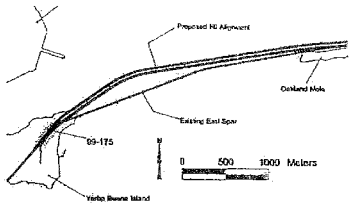

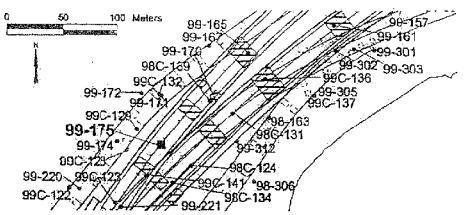

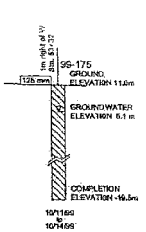

Metric

DIST	COUNTY	ROUTE	KILOMETER POST TOTAL PROJECT	SHEET NO.	TOTAL SHEETS
04	SF	80		88	137

REGISTERED GEOTECHNICAL ENGINEER

PLANS APPROVAL DATE

REGISTERED PROFESSIONAL ENGINEER — MIKE KAPUSKAR — No. GE 2264 Exp. 12-31-09 — GEOTECHNICAL — STATE OF CALIFORNIA

FUGRO-EARTH MECHANICS, A JOINT VENTURE
7700 Edgewater Dr., Ste. 845,
Oakland, CA 94621
(510) 562-9535, FAX (510) 562-8858

The State of California or its officers or agents shall not be responsible for the accuracy or completeness of electronic copies of this plan sheet.

BORING 99-175

COORDINATES: E1836025 N647327
CA State Plane Zone 3, NAD83, Meters
GROUND ELEVATION: 11.0m (MSL)
START DATE: 10/13/09

STATION: 1m rgt of W Sta. 53+32
COMPLETION ELEVATION: -19.5m (MSL)
END DATE: 10/14/09

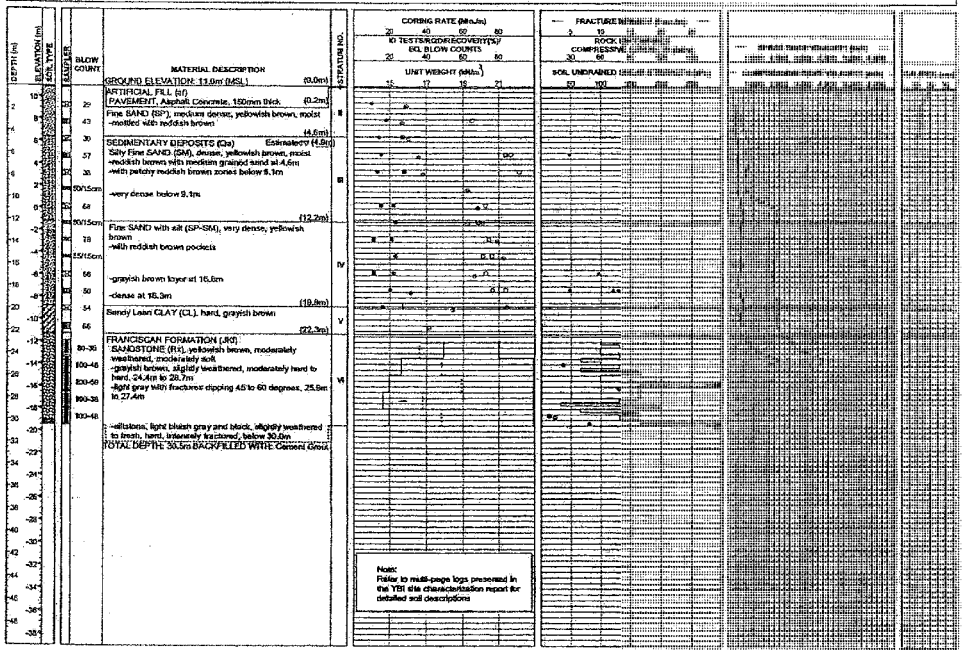

Note:
Refer to multi-page logs presented in the YBI site characterization report for detailed soil descriptions

CONTRACT NO. 04-0120F4

CONTRACT CHANGE ORDER NO. 343

SHEET 232 OF 290

ROBERT PRICE / SAIDA MOHAN — GEOTECHNICAL DESIGN CONSULTANT	DRAWN BY	A.BROUGHTON	S.SICILIANO — FIELD INVESTIGATION	PREPARED FOR THE STATE OF CALIFORNIA DEPARTMENT OF TRANSPORTATION	M. KAPUSKAR — PROJECT ENGINEER
	CHECKED BY	S. VARATHARAJ	DATE SEE ABOVE		

ORIGINAL SCALE IN CENTIMETERS 0 1 2 3 4 5 6 7 8 9 10
FOR REDUCED PLANS

CU 04251
EA 012051

BRIDGE NO.	34-0006 L/R
KM POST	12.8
POST MILE	

SAN FRANCISCO OAKLAND BAY BRIDGE
EAST SPAN SEISMIC SAFETY PROJECT

YBI EB TRANSITION STRUCTURES

LOG OF TEST BORINGS NO. 8

DISREGARD PRINTS BEARING EARLIER REVISION DATES →

REVISION DATES (PRELIMINARY STAGE ONLY)

SHEET	OF
32	65

SOIL AND ROCK TYPES

Well graded GRAVEL (GW)
Poorly graded GRAVEL (GP)
GRAVEL well sand (GP or GW)
Clayey GRAVEL (GC)
GRAVEL with silt (GP or GW)
Silty GRAVEL (GM)
Well graded SAND (SW)
Poorly graded SAND (SP)
SAND with gravel (SP or SW)
SAND with clay (SP-SC)
Clayey SAND (SC)
Silty SAND (SM)
SAND with silt (SP-SM)
Fat CLAY (CH)
Sandy fat CLAY (CH)
Lean CLAY (CL)
Sandy lean CLAY (CL)
Silty CLAY (CL-ML)
Elastic SILT (MH)
SILT (ML)
Sandy SILT (ML)
Clayey silt (MH/CL)
Highly plastic ORGANICS (OH)
Low plasticity ORGANICS (OL)
SANDSTONE (Fs)
SILTSTONE (Fs)
CLAYSTONE (Fs)
Interbedded Rock Strata (Fs)
PAVEMENT

SAMPLERS

75mm-OD, 72mm-ID 3in Walled Tube
87mm-OD, 54mm-ID Thin Walled Delmas Tube
63.5mm-OD, 54mm-ID Osborne Liner
76mm-OD, 60mm-ID Modified California Liner
54mm-OD, 35mm-ID SPT Split Spoon Sampler
Rock Core (block symbol represents recovery (%))

* A variable-OD, 34-mm-ID tapered driven tube was used to sample coarse sand, gravel and rock.

STANDARD PENETRATION TEST (SPT) AND MODIFIED CALIFORNIA (MC) LINER SAMPLERS

Samplers were driven with a 63.5 kg hammer dropped approximately 760 mm.

20 — Number of blows to produce 30 cm of penetration after the initial 15 cm of seating.

35/25cm — Number of blows required to produce the indicated penetration after an initial 15 cm seating.

R=50/5cm — 50 blows produced the indicated penetration during the initial 15 cm tabamed.

Note: In rock, every interval discovered (R) BPID are entered in the Blow Count column.

TUBE AND OFFSHORE LINER SAMPLERS

WOH — Offshore Liner sample advanced with the weight of an 80 kg hammer.

PUSH or SAMP — Pushed thin-walled 76mm-OD tube.

13/60cm — Number of blows required to produce the indicated penetration using a 64mm-ID tube sampler. The sampler was driven with an 80 kg downhole hammer dropped approximately 1.5 m.

CLASSIFICATION TESTS, BLOW COUNTS AND ROCK QUALITY

B — PERCENT PASSING #200 SIEVE
w — WATER CONTENT (%)
D — ---- UNIT WEIGHT (kN/m³)
O — THEORETICAL: ---- / UNIT WEIGHT (kN/m³)
PLASTIC LIMIT — LIQUID LIMIT

e — EQUIVALENT SPT BLOW COUNT = (MC BLOWCOUNT)/0.8 OR SPT BLOWCOUNT
---- ROCK QUALITY DESIGNATION (RQD)
---- ROCK RECOVERY PERCENT
---- ROCK CORING RATE

STRENGTH TESTS

POCKET PENETROMETER
BORVANE
REMOTE VANE
MINIATURE VANE @ RESIDUAL VANE)
UNCONSOLIDATED UNDRAINED TRIAXIAL
SWEDISH FALL CONE
UNCONFINED COMPRESSION (UCR)
Qu (Form symbols indicate specified tests)
Shear Strength interpreted from CPT Tip Resistance (Nk = 13-15)

POINT LOAD TEST (ROCK-INTACT SPECIMEN)
POINT LOAD TEST (ROCK-ALONG WEAK PLANE)
UNCONFINED COMPRESSION (ROCK)
Shift Strength Extended Capability of Measuring Device
Rock: Sample broke along discontinuity; intact sample would have greater strength
FRACTURE DENSITY (ROCK)

STRENGTH OF COHESIVE SOILS

Consistency	Undrained Shear Strength kPa
Very Soft	less than 12
Soft	12 to 25
Firm	25 to 50
Stiff	50 to 100
Very Stiff	100 to 200
Hard	greater than 200

DENSITY OF GRANULAR SOILS

Descriptive Term	Relative Density (%)*
Very Loose	less than 15
Loose	15 to 35
Medium Dense	35 to 65
Dense	65 to 85
Very Dense	greater than 85

*Estimated from sampler driving record and CPT tip resistance.

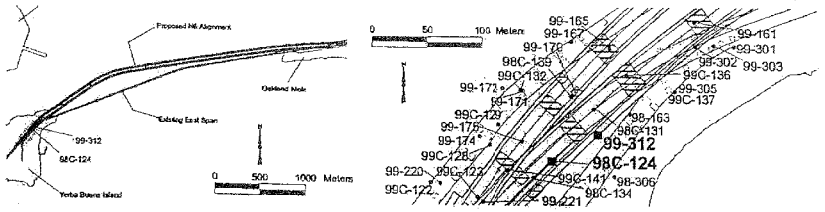

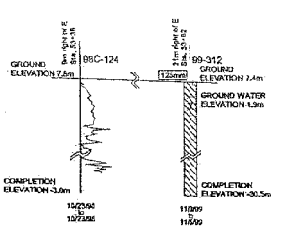

Metric

DIST	COUNTY	ROUTE	KILOMETER POST TOTAL PROJECT	SHEET NO.	TOTAL SHEETS
04	SF	80		89	137

REGISTERED GEOTECHNICAL ENGINEER

PLANS APPROVAL DATE

REGISTERED PROFESSIONAL ENGINEER — MIKE KAPUSKAR — No. GE 2544 — Exp. 12-31-06 — REGISTERED — CIVIL — STATE OF CALIFORNIA

FUGRO-EARTH MECHANICS, A JOINT VENTURE
7702 Edgewater Dr., Ste. 840
Oakland, CA 94621
(510) 562-3633, FAX (510)562-3656

The State of California or its officers or agents shall not be responsible for the accuracy or completeness of electronic copies of this plan sheet.

CPT 98C-124

COORDINATES: E1836352 N647316
CA State Plane Zone 3, NAD83, Meters
GROUND ELEVATION 7.6m (MSL)
START DATE: 10/23/98

STATION: 8m right of E Sta. 53+38
COMPLETION ELEVATION: -3.0m (MSL)
CONE END AREA: 15.00 sq. cm
(Area Ratio = 0.56)

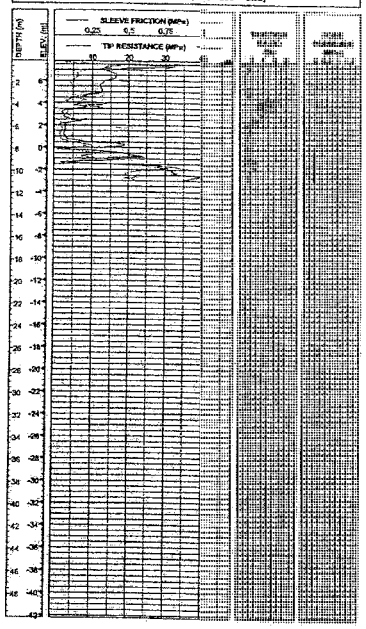

BORING 99-312

COORDINATES: E1836093 N647331
CA State Plane Zone 3, NAD83, Meters
GROUND ELEVATION: 7.4m (MSL)
START DATE: 11/5/99

STATION: 16m left of EB Detour Sta. 52+68
COMPLETION ELEVATION: -30.5m (MSL)
END DATE: 11/5/99

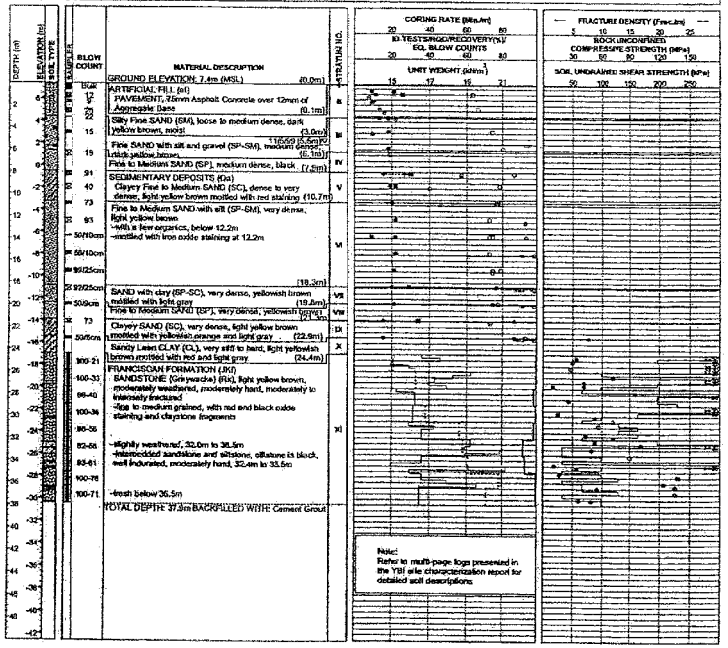

Note: Refer to multi-page logs presented in the YBI site characterization report for detailed soil descriptions.

CONTRACT NO. 04-012-0R4

CONTRACT CHANGE ORDER NO. 78

SHEET 22 OF 230

ROBERT PRICE / SABA MOHAN — GEOTECHNICAL DESIGN ENGINEER	DRAWN BY	L. FLUKE	L. FLUKE — FIELD INVESTIGATION	PREPARED FOR THE STATE OF CALIFORNIA DEPARTMENT OF TRANSPORTATION	M. KAPUSKAR — PROJECT ENGINEER
	CHECKED BY	M. KAPUSKAR, S. VARATHARAJ	DATE SEE ABOVE		

ORIGINAL SCALE IN CENTIMETERS FOR REDUCED PLANS 0 1 2 3 4 5 6 7 8 9 10

CU 04251
EA 012051

BRIDGE NO.	34-0006 L/R
KM POST	12.8
POST MILE	

SAN FRANCISCO OAKLAND BAY BRIDGE
EAST SPAN SEISMIC SAFETY PROJECT

YBI EB TRANSITION STRUCTURES

LOG OF TEST BORINGS NO. 9

DISREGARD PRINTS BEARING EARLIER REVISION DATES →

REVISION DATES (PRELIMINARY STAGE ONLY)

SHEET	OF
33	65

SOIL AND ROCK TYPES

Well graded GRAVEL (GW)
Poorly graded GRAVEL (GP)
GRAVEL with sand (GP or GW)
GRAVEL with clay (GP or GW)
Clayey GRAVEL (GC)
GRAVEL with silt (GP or GW)
Silty GRAVEL (GM)
Well graded SAND (SW)
Poorly graded SAND (SP)
SAND with gravel (SP or SW)
SAND with clay (SP-SC)
Clayey SAND (SC)
Silty SAND (SM)
SAND with silt (SP-SM)
Fat CLAY (CH)
Sandy fat CLAY (CH)
Lean CLAY (CL)
Sandy lean CLAY (CL)
Silty CLAY (CL-ML)
Elastic SILT (MH)
SILT (ML)
Sandy SILT (ML)
Clayey silt (ML/CL)
High plastic ORGANICS (OH)
Low plasticity ORGANICS (OL)
SANDSTONE (Ss)
SILTSTONE (Sh)
CLAYSTONE (Cs)
Interbedded Rock Strata (IR)
PAVEMENT

SAMPLERS

76mm-OD, 72mm-ID Thin Walled Tube
87mm-OD, 84mm-ID* Thin Walled Driven Tube
63.5mm-OD, 54mm-ID Offshore Liner
75mm-OD, 65mm-ID Modified California Liner
51mm-OD, 35mm-ID SPT Split Spoon Sampler
Rock Core (bold symbol represents recovery (%))

* A retrofit-OD, 54-mmID tapered driven tube was used to sample dense sand, gravel and rock.

STANDARD PENETRATION TEST (SPT) AND MODIFIED CALIFORNIA (MC) LINER SAMPLERS

Samplers were driven with a 63.5 kg hammer dropped approximately 760 mm.

30 — Number of blows to produce 30 cm of penetration after the initial 15 cm of seating.

50/25cm — Number of blows required to produce the indicated penetration after an initial 15 cm seating.

Ref/8cm — 50 blows produced the indicated penetration during the initial 15 cm interval.

Note: In rock cores interval recovery(%)-RQD are shown in the Blow Count column.

TUBE AND OFFSHORE LINER SAMPLERS

WOH — Offshore liner sample advanced with the weight of water and hammer.

PUSH or SAVE — Pushed 63mm-ID 76mm-OD tube.

1560cm — Number of blows required to produce the indicated penetration using a 54mm-ID tube sampler. The sampler was driven with an 80 kg downhole hammer dropped approximately 1.5 m.

CLASSIFICATION TESTS BLOW COUNTS AND ROCK QUALITY

- PERCENT PASSING #200 SIEVE
- WATER CONTENT (%)
- UNIT WEIGHT (pcf or kN/m³)
- THEORETICAL UNIT WEIGHT (pcf or kN/m³)
- PLASTIC LIMIT / LIQUID LIMIT
- EQUIVALENT SPT BLOW COUNT = (MC BLOWCOUNT/1.2) OR SPT BLOWCOUNT
- ROCK QUALITY DESIGNATION (RQD)
- ROCK RECOVERY PERCENT
- ROCK CORING RATE

STRENGTH TESTS

- POCKET PENETROMETER
- TORVANE
- ROSETTE VANE
- MINIATURE VANE (○ RESIDUAL VANE)
- UNCONSOLIDATED UNDRAINED TRIAXIAL
- SWEDISH FALL CONE
- UNCONFINED COMPRESSION (SOIL)
- (Open symbols indicate remolded tests)
- Shear Strength Interpreted from CPT Tip Resistance (Qc = 12-15)
- POINT LOAD TEST (ROCK/INTACT SPECIMEN)
- POINT LOAD TEST (ROCK/ALONG WEAK PLANE)
- UNCONFINED COMPRESSION (ROCK)
- Soil Strength Exceeds Capacity of Measuring Device
- Rock Sample broke along (predominantly) Isolated example would have greater strength
- FRACTURE DENSITY (ROCK)

STRENGTH OF CONESIVE SOILS

Consistency	Undrained Shear Strength kPa
Very Soft	less than 12
Soft	12 to 25
Firm	25 to 50
Stiff	50 to 100
Very Stiff	100 to 200
Hard	greater than 200

DENSITY OF GRANULAR SOILS

Descriptive Term	Relative Density (%)*
Very Loose	less than 15
Loose	15 to 35
Medium Dense	35 to 65
Dense	65 to 85
Very Dense	greater than 85

*Estimated from sampler driving record and CPT tip resistance.

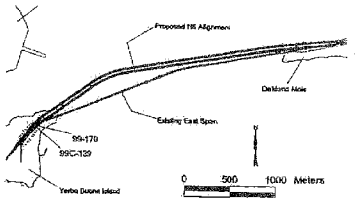

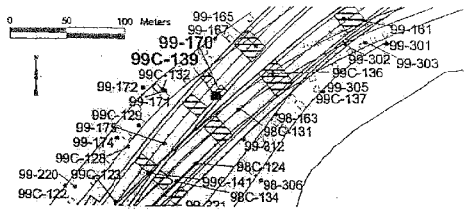

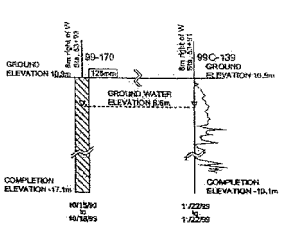

Metric

DIST	COUNTY	ROUTE	KILOMETER POST TOTAL PROJECT	SHEET NO.	TOTAL SHEETS
04	SF	80		90	137

REGISTERED GEOTECHNICAL ENGINEER

PLANS APPROVAL DATE

REGISTERED PROFESSIONAL ENGINEER — MIKE KAPUSKAR — No. GE 2504 Exp. 12-31-00 — GEOTECHNICAL — STATE OF CALIFORNIA

FUGRO-EARTH MECHANICS, A JOINT VENTURE, 7708 Edgewater Dr., Ste. 848, Oakland, CA 94621 (510) 562-6833, FAX (510) 562-6858

The State of California or its officers or agents shall not be responsible for the accuracy or completeness of electronic copies of this plan sheet.

BORING 99-170

COORDINATES: E1836070 N647368
CA State Plane Zone 3, NAD83, Meters
GROUND ELEVATION: 10.5m (MSL)
START DATE: 10/15/99

STATION: 8m right of W Sta. 53+93
COMPLETION ELEVATION: -17.1m (MSL)
END DATE: 10/18/99

DEPTH (m)	ELEVATION (m)	SOIL TYPE	SAMPLER	BLOW COUNT	MATERIAL DESCRIPTION	STRATUM NO.
					GROUND ELEVATION: +10.5m (MSL) (0.0m)	
				Bulk 15 30 10 15	ARTIFICIAL FILL (af) PAVEMENT, Asphalt Concrete, 50mm thick, and aggregate base (0.2m) Silty Fine SAND (SM), medium dense, moderate yellowish brown (4.3m)	II
				58	SEDIMENTARY DEPOSITS (Qs) (4.6m) Silty Fine SAND (SM), medium dense, light yellowish brown (7.6m)	III
				22 24 34	Silty Fine SAND (SM), medium dense, light greenish gray (11.1m)	IV
				84 71	Silty SAND (SM), dense to very dense, light yellowish brown, -wet, fine to coarse grained -clayey sand, with faint petroleum odor, at 12.5m -very dense, light gray, with increasing fines content, at 13.9m (16.8m)	V
				41 80	Sandy CLAY (CL), very stiff, light gray, wet (18.3m) Sandy Lean CLAY (CL), very stiff to hard, light brown (21.3m)	VI VII
				100/30cm 675/5cm 100-73 83-25 100-33 100-100	FRANCISCAN FORMATION (JKf) SANDSTONE (Graywacke) (Rx), light brown, intensely weathered, soft	VIII
					TOTAL DEPTH 28.0m BACKFILLED WITH Cement Grout	

CORING RATE (Min./m)
ES TEST/GROUT RECOVERY (%)/ RQD
ES. BLOW COUNTS
UNIT WEIGHT (kN/m³)

FRACTURE DENSITY (Fract./m)
ROCK UNCONFINED COMPRESSIVE STRENGTH (MPa)
SOIL UNDRAINED SHEAR STRENGTH (kPa)

Note: Refer to multi-page logs presented in the YBI site characterization report for detailed soil descriptions

CPT 99C-139

COORDINATES: E1835068 N647367
CA State Plane Zone 3, NAD83, Meters
GROUND ELEVATION: 10.5m (MSL)
START DATE: 11/23/99

STATION: 8m right of W Sta. 53+91
COMPLETION ELEVATION: +10.1m (MSL)
CONE ENT AREA: 15.00 sq. cm
(Area Ratio = 0.56)

SLEEVE FRICTION (MPa)
TIP RESISTANCE (MPa)
FRICTION RATIO (%)
PORE PRESSURE (MPa)

ROBERT PRICE / BABA MOHAN — GEOTECHNICAL DESIGN OVERSIGHT	DRAWN BY	L.FLUKE	C. PRENTICE — FIELD INVESTIGATION — DATE: SEE ABOVE
	CHECKED BY	M. KAPUSKAR, S. VARATHARAJ	

PREPARED FOR THE
STATE OF CALIFORNIA
DEPARTMENT OF TRANSPORTATION

M. KAPUSKAR — PROJECT ENGINEER

ORIGINAL SCALE IN CENTIMETERS FOR REDUCED PLANS 0 1 2 3 4 5 6 7 8 9 10

DT 04 251
EA 012081

BRIDGE NO.	34-0006 L/R
KM POST	12.8
POST MILE	

DISREGARD PRINTS BEARING EARLIER REVISION DATES →

SAN FRANCISCO OAKLAND BAY BRIDGE
EAST SPAN SEISMIC SAFETY PROJECT

YBI TRANSITION STRUCTURES

LOG OF TEST BORINGS NO. 10

SHEET 34 OF 65

CONTRACT NO. 04-012081

CONTRACT CHANGE ORDER NO. 73

SHEET 234 OF 260

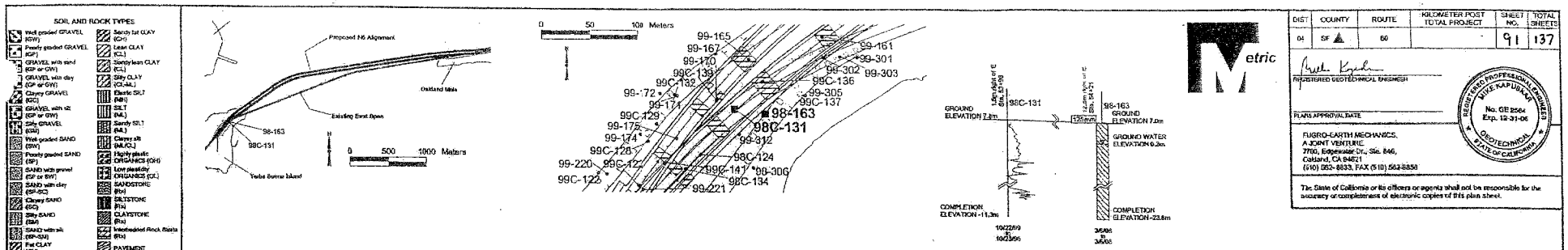

DIST	COUNTY	ROUTE	KILOMETER POST TOTAL PROJECT	SHEET NO.	TOTAL SHEETS
04	SF	80		91	137

REGISTERED GEOTECHNICAL ENGINEER

PLANS APPROVAL DATE

REGISTERED PROFESSIONAL ENGINEER — MIKE KAPUSKAR — No. GE 2564 Exp. 12-31-06 — GEOTECHNICAL — STATE OF CALIFORNIA

FUGRO-EARTH MECHANICS,
A JOINT VENTURE
7700, Edgewater Dr., Ste. 846,
Oakland, CA 94621
(510) 562-8833, FAX (510) 562-8850

The State of California or its officers or agents shall not be responsible for the accuracy or completeness of electronic copies of this plan sheet.

CPT 98C-131

COORDINATES: E1836089 N647356
CA State Plane Zone 3, NAD83, Meters
GROUND ELEVATION: 7.8m (MSL)
START DATE: 10/22/98

STATION: 1.5m right E Sta. 53+96
COMPLETION ELEVATION: -11.3m (MSL)
CONE END AREA: 15.00 sq. cm
(Area Ratio = 0.56)

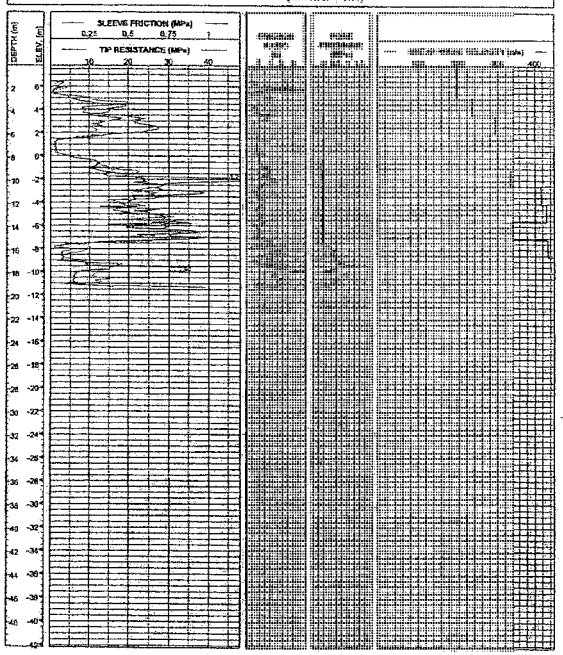

BORING 98-163

COORDINATES: E1836122 N647352
CA State Plane Zone 3, NAD83, Meters
GROUND ELEVATION: 7.0m (MSL)
START DATE: 3/6/98

STATION: 10m left of EB Belour Sta. 54+25
COMPLETION ELEVATION: -23.6m (MSL)
END DATE: 3/6/98

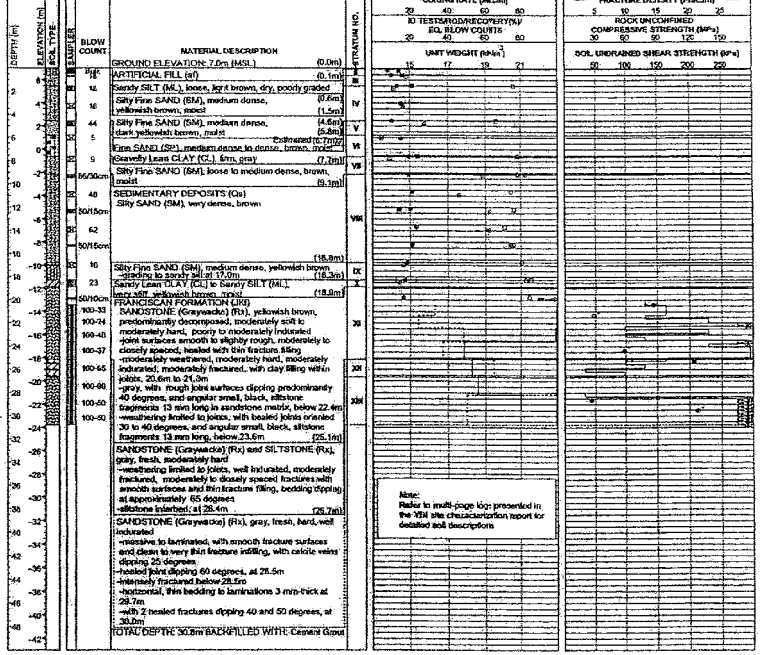

CONTRACT NO. 04-0A4804
CONTRACT CHANGE ORDER NO. 343
SHEET 235 OF 250

ROBERT PRICE / SASA MOHAN	DRAWN BY	A. BROUGHTON	B.SCHELL, S. SICILIANO	PREPARED FOR THE STATE OF CALIFORNIA DEPARTMENT OF TRANSPORTATION	M. KAPUSKAR
GEOTECHNICAL DESIGN OVERSIGHT	CHECKED BY	M. KAPUSKAR, S. SICILIANO, S. VARATHARAJ	FIELD INVESTIGATION DATE SEE ABOVE		PROJECT ENGINEER

ORIGINAL SCALE IN CENTIMETERS FOR REDUCED PLANS 0 1 2 3 4 5 6 7 8 9 10

CU 6425 I
EA 612051

BRIDGE NO.	KM POST	POST MILE
34-0006 L/R	12.8	

SAN FRANCISCO OAKLAND BAY BRIDGE
EAST SPAN SEISMIC SAFETY PROJECT

YBI TRANSITION STRUCTURES

LOG OF TEST BORINGS NO. 11

DISREGARD PRINTS BEARING EARLIER REVISION DATES →

REVISION DATES (PRELIMINARY STAGE ONLY)	SHEET	OF
	35	65

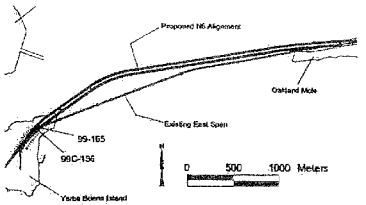

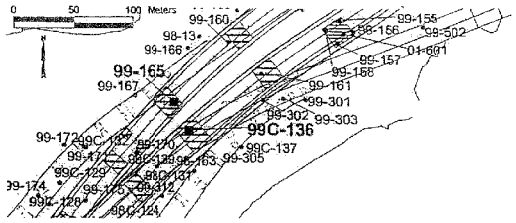

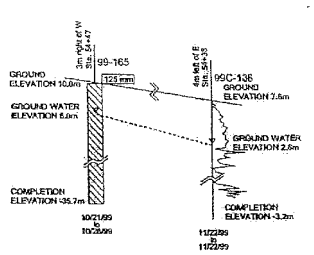

DIST	COUNTY	ROUTE	KILOMETER POST TOTAL PROJECT	SHEET NO.	TOTAL SHEETS
04	SF	80		92	137

REGISTERED GEOTECHNICAL ENGINEER

PLANS APPROVAL DATE

REGISTERED PROFESSIONAL ENGINEER — MIKE KAPUSKAR — No. GE 2284 Exp. 12-31-00 — GEOTECHNICAL — STATE OF CALIFORNIA

FUGRO-EARTH MECHANICS, A JOINT VENTURE
7700, Edgewater Dr., Ste. 846,
Oakland, CA 94621
(510) 562-8833, FAX (510) 562-8858

The State of California or its officers or agents shall not be responsible for the accuracy or completeness of electronic copies of this plan sheet.

SOIL AND ROCK TYPES

Well graded GRAVEL (GW) · Poorly graded GRAVEL (GP) · GRAVEL with sand (GP or GW) · GRAVEL with clay (GP or GW) · Clayey GRAVEL (GC) · GRAVEL with silt (GP or GW) · Silty GRAVEL (GM) · Well graded SAND (SW) · Poorly graded SAND (SP) · SAND with gravel (SP or SW) · SAND with clay (SP-SC) · Clayey SAND (SC) · Silty SAND (SM) · SAND with silt (SP-SM) · Fat CLAY (CH) · Sandy fat CLAY (CH) · Lean CLAY (CL) · Sandy lean CLAY (CL) · Silty CLAY (CL-ML) · Elastic SILT (MH) · SILT (ML) · Sandy SILT (ML) · Clayey silt (ML/CL) · Highly plastic ORGANICS (OH) · Low plasticity ORGANICS (OL) · SANDSTONE (Ss) · SILTSTONE (Sh) · CLAYSTONE (Cs) · Interbedded Rock Strata (Ib) · PAVEMENT

SAMPLERS

- 76mm-OD, 72mm-ID Thin Walled Tube
- 75mm-OD, 60mm-ID Modified California Liner
- 87mm-OD, 54mm-ID* Thin Walled Driven Tube
- 63.5mm-OD, 54mm-ID SPT Split Spoon Sampler
- 63.5mm-OD, 54mm-ID Diedrich Liner
- Rock Core (small symbol represents recovery (%))

* A variable-OD, 54-mm-ID tapered driven tube was used to sample coarse sand, gravel and rock.

STANDARD PENETRATION TEST (SPT) AND MODIFIED CALIFORNIA (MC) LINER SAMPLERS

Samplers were driven with a 63.5 kg hammer dropped approximately 760 mm.

- 20 — Number of blows to produce 30 cm of penetration after the initial 15 cm of seating.
- 30/20cm — Number of blows required to produce the indicated penetration after an initial 15 cm seating.
- Ref/5cm — 50 blows produced the indicated penetration during the initial 15 cm interval.

Note: In rock coring interval in cm over (L) RQD are shown in the Blow Count column.

TUBE AND OFFSHORE LINER SAMPLERS

- WOH — Offshore Liner sample advanced with the weight of an 80 kg hammer.
- PUSH or SAVE — Pushed thin-walled 76mm-OD tube.
- 1500cm — Number of blows required to produce the indicated penetration using a 54mm-ID tube sampler. The sampler was driven with an 80 kg downhole hammer dropped approximately 1.5 m.

CLASSIFICATION TESTS BLOW COUNTS AND ROCK QUALITY

- P PERCENT PASSING #200 SIEVE
- w WATER CONTENT (%)
- γ UNIT WEIGHT (KN/m³)
- o THEORETICAL UNIT WEIGHT (KN/m³)
- PLASTIC LIMIT — LIQUID LIMIT
- ● EQUIVALENT SPT BLOW COUNT = (MC BLOWCOUNT/1.4) OR SPT BLOWCOUNT
- ---- ROCK QUALITY DESIGNATION (RQD)
- ---- ROCK RECOVERY PERCENT
- —— ROCK CORING RATE

STRENGTH TESTS

- ● POCKET PENETROMETER
- ▼ TORVANE
- ◆ REMOTE VANE
- ◆ MINIATURE VANE, (r RESIDUAL VANE)
- ▲ UNCONSOLIDATED UNDRAINED TRIAXIAL
- ▼ SWEDISH FALL CONE
- ■ UNCONFINED COMPRESSION (SOIL)
- Cu (Open symbols indicate remolded tests)
- Shear Strength Interpreted from SPT Tip Resistance (Ntip = 13-19)
- ● POINT LOAD TEST (ROCK-INTACT SPECIMEN)
- ● POINT LOAD TEST (ROCK-ALONG WEAK PLANE)
- ■ UNCONFINED COMPRESSION (ROCK)
- + Soil Strength Exceeds Capacity of Measuring Device. Rock Sample broke along discontinuity. Intact sample would have greater strength.
- —— FRACTURE DENSITY (ROCK)

STRENGTH OF COHESIVE SOILS

Consistency	Undrained Shear Strength kPa
Very Soft	less than 12
Soft	12 to 25
Firm	25 to 50
Stiff	50 to 100
Very Stiff	100 to 200
Hard	greater than 200

DENSITY OF GRANULAR SOILS

Descriptive Term	Relative Density (%)*
Very Loose	less than 15
Loose	15 to 35
Medium Dense	35 to 65
Dense	65 to 85
Very Dense	greater than 85

*Estimated from sampler driving record and CPT tip resistance.

BORING 99-165

COORDINATES: E1836104 N647410
CA State Plane Zone 3, NAD83, Meters
GROUND ELEVATION: 10.0m (MSL)
START DATE: 10/21/99

STATION: 3m right of W Sta. 54+47
COMPLETION ELEVATION: -35.7m (MSL)
END DATE: 10/26/99

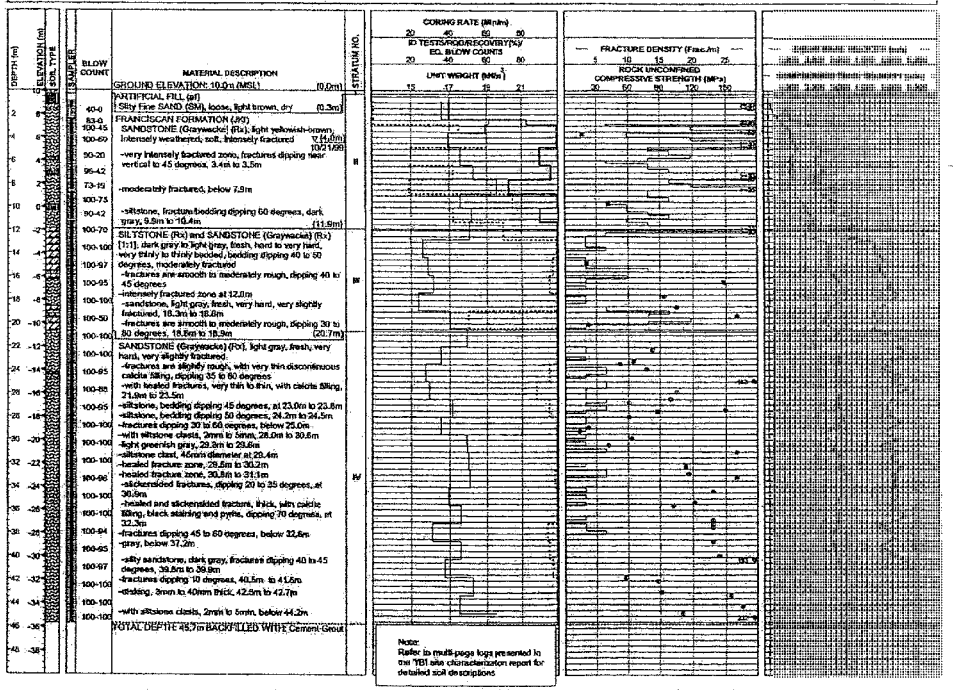

Note: Refer to multi-page logs presented in the YBI site characterization report for detailed soil descriptions.

CPT 99C-136

COORDINATES: E1836119 N647287
CA State Plane Zone 3, NAD83, Meters
GROUND ELEVATION: 7.5m (MSL)
START DATE: 11/22/99

STATION: 4m left of E Sta. 54+90
COMPLETION ELEVATION: -3.2m (MSL)
CONE END AREA: 15.00 sq. cm
(Area Ratio = 0.56)

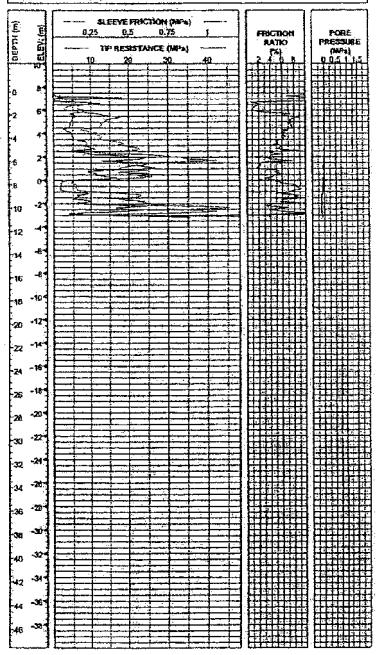

CONTRACT NO. 04-0A2004
CONTRACT CHANGE ORDER NO
SHEET 236 OF 262

ROBERT PRICE / SABA MOHAN — GEOTECHNICAL DESIGN OVERSIGHT	DRAWN BY	A. BROUGHTON	C. PRENTICE — FIELD INVESTIGATION	PREPARED FOR THE STATE OF CALIFORNIA DEPARTMENT OF TRANSPORTATION	M. KAPUSKAR — PROJECT ENGINEER
	CHECKED BY	M. KAPUSKAR, S. VARATHARAJ	DATE SEE ABOVE		

ORIGINAL SCALE IN CENTIMETERS FOR REDUCED PLANS 0 1 2 3 4 5 6 7 8 9 10

CU 042S1
EA 012081

SAN FRANCISCO OAKLAND BAY BRIDGE
EAST SPAN SEISMIC SAFETY PROJECT

YBI TRANSITION STRUCTURES

LOG OF TEST BORINGS NO. 12

BRIDGE NO.	KM POST	POST MILE
34-0006 L/R	12.8	

DISREGARD PRINTS BEARING EARLIER REVISION DATES →

REVISION DATES (PRELIMINARY STAGE ONLY)

SHEET 36 OF 65

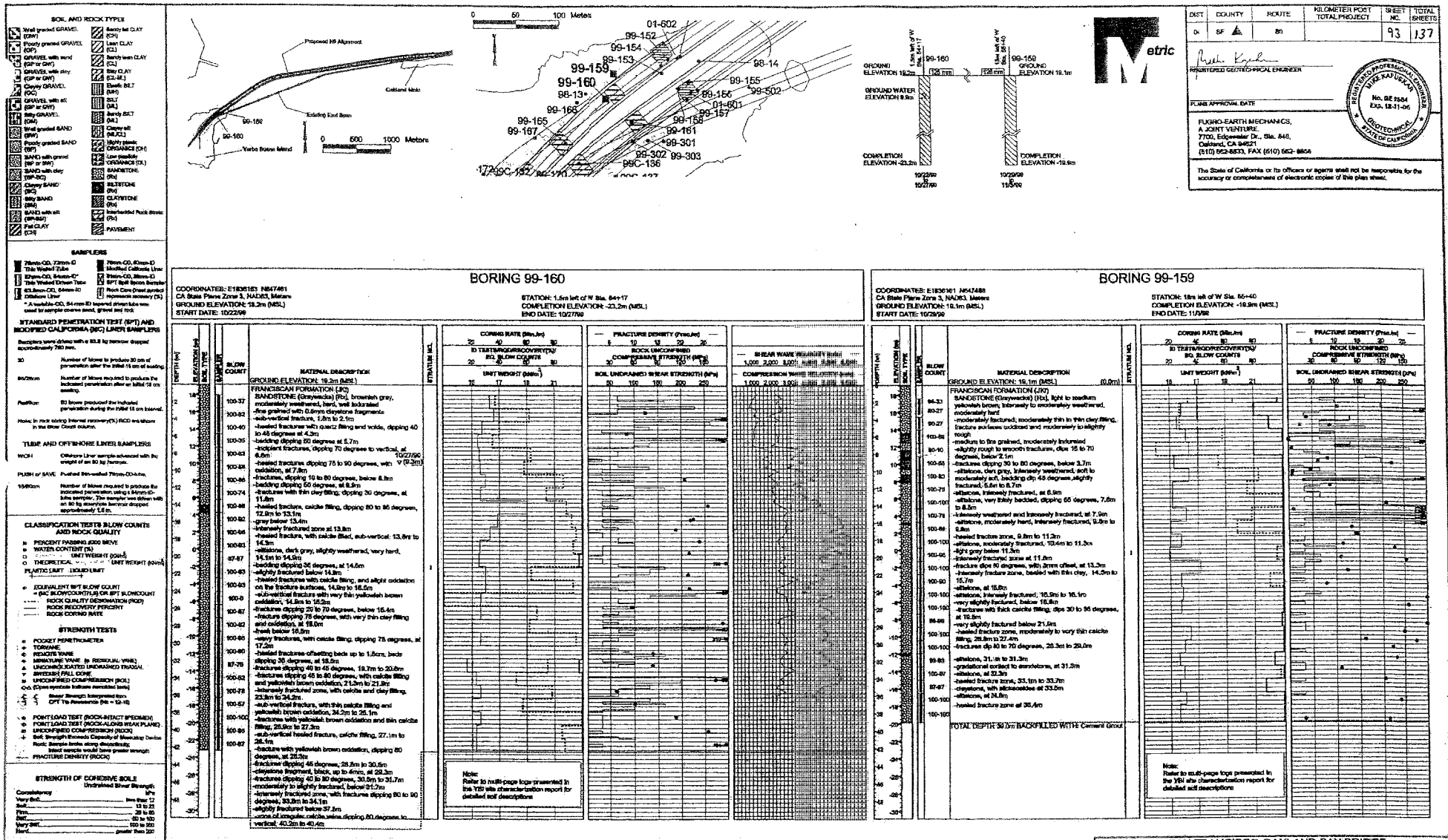
SOIL AND ROCK TYPES
Well graded GRAVEL (GW)
Poorly graded GRAVEL (GP)
GRAVEL with sand (GP or GW)
GRAVEL, wide silty (GP or GW)
Poorly GRAVEL (GC)
GRAVEL with silt (GP or GW)
Silty GRAVEL (GM)
Well graded SAND (SW)
Poorly graded SAND (SP)
SAND with gravel (SP or SW)
SAND with clay (SP-SC)
Clayey SAND (SC)
Silty SAND (SM)
SAND with silt (SP-SM)
Fat CLAY (CH)
Sandy fat CLAY (CH)
Lean CLAY (CL)
Sandy lean CLAY (CL)
Silty CLAY (CL-ML)
Elastic SILT (MH)
SILT (ML)
Sandy SILT (ML)
Clayey silt (ML/CL)
Highly plastic ORGANICS (OH)
Low plasticity ORGANICS (OL)
SANDSTONE (Rs)
SILTSTONE (Rs)
CLAYSTONE (Rs)
Interbedded Rock Strata (Rs)
PAVEMENT
SAMPLERS
75mm-OD, 72mm-ID Thin Walled Tube
75mm-OD, 63mm-ID Modified California Liner
63mm-OD, 54mm-ID Thin Walled Driven Tube
63mm-OD, 38mm-ID SPT Split Spoon Sampler
63.5mm-OD, 54mm-ID Stationary Liner
Rock Core Diesel symbol represents recovery (%)
* A loadable OD, 54 mm ID beyond driven tube was used for sample coarse sand, gravel and rock
STANDARD PENETRATION TEST (SPT) AND MODIFIED CALIFORNIA (MC) LINER SAMPLERS
Samplers were driven with a 63.5 kg hammer dropped approximately 760 mm.
30 Number of blows to produce 30 cm of penetration after the initial 15 cm of seating
8/12cm Number of blows required to produce the indicated penetration after an initial 15 cm seating.
Ref/6cm 50 blows produced the indicated penetration during the initial 15 cm interval.
Note: In rock coring interval recovery(%) /RQD are shown in the Blow Count column.
TUBE AND OFFSHORE LINER SAMPLERS
WOH Offshore Liner sample advanced with the weight of an 80 kg hammer.
PUSH or SAVE Pushed thin-walled 75mm-OD tube.
15/60cm Number of blows required to produce the indicated penetration using a 64mm-ID tube sampler. The sampler was driven with an 80 kg downhole hammer dropped approximately 1.5 m.
CLASSIFICATION TESTS BLOW COUNTS AND ROCK QUALITY
P PERCENT PASSING #200 SIEVE
W WATER CONTENT (%)
D UNIT WEIGHT (kN/m³)
O THCRITICAL UNIT WEIGHT (kN/m³)
PLASTIC LIMIT LIQUID LIMIT
EQUIVALENT SPT BLOW COUNT
MC BLOWCOUNT/6 OR SPT BLOWCOUNT
ROCK QUALITY DESIGNATION (RQD)
ROCK RECOVERY PERCENT
ROCK CORING RATE
STRENGTH TESTS
POCKET PENETROMETER
TORVANE
HEIDITE VANE
MINIATURE VANE (R RESIDUAL VANE)
UNCONSOLIDATED UNDRAINED TRIAXIAL
SWEDISH FALL CONE
UNCONFINED COMPRESSION (POL)
CVS (Cyclic eyeclastic triaxial on undisturbed tests)
Shear Strength Interpreted from CPT Tip Resistance (Nk = 12-15)
POINT LOAD TEST (ROCK-INTACT SPECIMEN)
POINT LOAD TEST (ROCK-ALONG WEAK PLANE)
UNCONFINED COMPRESSION (ROCK)
Shear Strength Exceeds Capacity of Measuring Device
Rock: Sample broke along discontinuity. Inland sample would have greater strength
FRACTURE DENSITY (ROCK)
STRENGTH OF COHESIVE SOILS
Undrained Shear Strength
Consistency kPa
Very Soft less than 12
Soft 13 to 25
Firm 26 to 50
Stiff 50 to 100
Very Stiff 100 to 200
Hard greater than 200
DENSITY OF GRANULAR SOILS
Descriptive Term Relative Density (%)
Very Loose less than 15
Loose 15 to 35
Medium Dense 35 to 65
Dense 65 to 85
Very Dense greater than 85
*Estimated from standard driving record and SPT to resistance.
Proposed NB Alignment
Caltrans Mole
Existing East Span
Yerba Buena Island
0 500 1000 Metres
0 50 100 Metres
01-602
99-152
99-154
99-153
99-159
99-160
98-13*
99-166
99-165
99-167
99-158
99-157
01-601
99-155
99-502
98-14
99-156
99-301
99-161
99-302
99-303
99C-136
99-160
99-159
GROUND ELEVATION 19.2m
GROUND WATER ELEVATION 9.8m
COMPLETION ELEVATION -23.2m
GROUND ELEVATION 19.1m
COMPLETION ELEVATION -19.9m
10/23/99 to 10/27/99
10/29/99 to 11/5/99
BORING 99-160
COORDINATES: E1836163 N647461
CA State Plane Zone 3, NAD83, Meters
GROUND ELEVATION: 19.2m (MSL)
START DATE: 10/22/99
STATION: 1.5m left of W Sta. 64+17
COMPLETION ELEVATION -23.2m (MSL)
END DATE: 10/27/99
BORING 99-159
COORDINATES: E1836161 N647488
CA State Plane Zone 3, NAD83, Meters
GROUND ELEVATION: 19.1m (MSL)
START DATE: 10/29/99
STATION: 18m left of W Sta. 65+40
COMPLETION ELEVATION: -19.9m (MSL)
END DATE: 11/5/99
DEPTH (m)
ELEVATION (m)
SOIL TYPE
SAMPLER TYPE
BLOW COUNT
MATERIAL DESCRIPTION
STRATUM NO.
CORING RATE (Min./m)
ID TEST/RQD/RECOVERY(%)
BD. BLOW COUNTS
UNIT WEIGHT (kN/m³)
FRACTURE DENSITY (Fres./m)
ROCK UNCONFINED COMPRESSIVE STRENGTH (MPa)
SOIL UNDRAINED SHEAR STRENGTH (kPa)
SHEAR WAVE VELOCITY (m/s)
COMPRESSION WAVE VELOCITY (m/s)
GROUND ELEVATION: 19.2m (MSL)
FRANCISCAN FORMATION (JKf)
SANDSTONE (Greywacke) (Rs), brownish gray, moderately weathered, hard, well indurated
-fine grained with 0.6mm diameter fragments
-well-vertical fracture, 1.8m to 2.1m
-healed fractures with quartz filling and voids, dipping 40 to 45 degrees at 4.3m
-bedding dipping 80 degrees at 5.7m
-incipient fractures, dipping 70 degree to vertical, at 6.6m
-healed fractures dipping 75 to 90 degrees, with 10/27/99 V (9.2m)
oxidation, at 7.9m
-fractures, dipping 10 to 80 degrees, below 8.8m
-bedding dipping 60 degree, at 8.9m
-fractures with thin clay filling, dipping 20 degrees, at 11.8m
-healed fracture, calcite filling, dipping 80 to 85 degrees, 12.8m to 13.1m
-gray below 13.4m
-intensely fractured zone at 13.8m
-healed fracture, with calcite filled, sub-vertical: 13.8m to 14.3m
-siltstone, dark gray, slightly weathered, very hard, 14.1m to 14.6m
-bedding dipping 35 degrees, at 14.6m
-slightly fractured below 14.9m
-healed fractures with calcite filling, and slight oxidation on the fracture surfaces, 14.9m to 16.5m
-sub-vertical fracture with very thin yellowish brown oxidation, 14.8m to 16.2m
-fractures dipping 20 to 70 degrees, below 16.4m
-fracture dipping 75 degrees, with very thin clay filling and oxidation, at 18.0m
-fresh below 18.8m
-wavy fractures, with calcite filling, dipping 75 degrees, at 17.2m
-healed fractures offsetting beds up to 1.6cm, beds dipping 35 degrees, at 18.5m
-fractures dipping 40 to 45 degrees, 19.7m to 20.6m
-fractures dipping 45 to 80 degrees, with calcite filling and yellowish brown oxidation, 21.2m to 21.8m
-intensely fractured zone, with calcite and clay filling, 23.3m to 24.2m
-sub-vertical fracture, with thin calcite filling and yellowish brown oxidation, 24.2m to 25.1m
-fractures with yellowish brown oxidation and thin calcite filling, 25.9m to 27.3m
-sub-vertical healed fracture, calcite filling, 27.1m to 28.1m
-fractures with yellowish brown oxidation, dipping 80 degrees, at 28.3m
-fractures dipping 45 degrees, 28.8m to 30.8m
-claystone fragment, black, up to 4mm, at 29.3m
-fractures dipping 40 to 80 degree, 30.0m to 31.7m
-moderately to slightly fractured, below 31.7m
-intensely fractured zone, with fractures dipping 80 to 90 degrees, 33.8m to 34.1m
-slightly fractured below 37.8m
-zone of irregular calcite veins dipping 80 degrees to vertical, 40.3m to 40.4m
TOTAL DEPTH: 42.4m BACKFILLED WITH: Cement Grout
Note: Refer to multi-page logs presented in the YBI site characterization report for detailed soil descriptions
GROUND ELEVATION: 19.1m (MSL) (0.0m)
FRANCISCAN FORMATION (JKf)
SANDSTONE (Greywacke) (Rs), light to medium yellowish brown, intensely to moderately weathered, moderately hard
-moderately fractured, moderately thin to thin clay filling, fracture surfaces oxidized and moderately to slightly rough
-medium to fine grained, moderately indurated
-slightly rough to smooth fractures, dips 15 to 70 degrees, below 2.1m
-fractures dipping 30 to 80 degrees, below 3.7m
-siltstone, dark gray, intensely weathered, soft to moderately soft, bedding dip 45 degrees, slightly fractured, 5.6m to 8.7m
-siltstone, intensely fractured, at 6.6m
-siltstone, very thinly bedded, dipping 65 degrees, 7.8m to 8.5m
-intensely weathered and intensely fractured, at 7.9m
-siltstone, moderately hard, intensely fractured, 9.0m to 9.8m
-healed fracture zone, 9.8m to 11.2m
-siltstone, moderately fractured, 10.4m to 11.0m
-light gray below 11.3m
-intensely fractured zone at 11.6m
-fracture dips 80 degrees, with 3mm offset, at 13.2m
-intensely fracture zone, beaded with thin clay, 14.5m to 15.7m
-siltstone, at 15.8m
-siltstone, intensely fractured, 16.9m to 16.1m
-very slightly fractured, below 16.8m
-fractures with thick calcite filling, dips 30 to 35 degrees, at 19.8m
-very slightly fractured below 21.6m
-healed fracture zone, moderately to very thin calcite filling, 26.8m to 27.4m
-fractures dip 60 to 70 degrees, 29.3m to 29.6m
-siltstone, 31.1m to 31.3m
-gradational contact to sandstone, at 31.3m
-siltstone, at 32.3m
-healed fracture zone, 33.1m to 33.7m
-claystone, with slickensides at 33.6m
-siltstone, at 34.9m
-healed fracture zone at 36.4m
TOTAL DEPTH: 39.7m BACKFILLED WITH: Cement Grout
Note: Refer to multi-page logs presented in the YBI site characterization report for detailed soil descriptions
ROBERT PRICE / BABA MOHAN
GEOTECHNICAL DESIGN OVERSIGHT
DRAWN BY A. BROUGHTON
CHECKED BY M. KAPUSKAR
J. PALMER, S. SICILIANO
PROJECT MANAGER
DATE SEE ABOVE
PREPARED FOR THE
STATE OF CALIFORNIA
DEPARTMENT OF TRANSPORTATION
M. KAPUSKAR
PROJECT ENGINEER
ORIGINAL SCALE IN CENTIMETERS FOR REDUCED PLANS 0 1 2 3 4 5 6 7 8 9 10
CU 04251
EA 012051
BRIDGE NO. 34-0006 L/R
KM POST 12.8
PORT MILE
SAN FRANCISCO OAKLAND BAY BRIDGE
EAST SPAN SEISMIC SAFETY PROJECT
YBI TRANSITION STRUCTURES
LOG OF TEST BORINGS NO. 13
DISREGARD PRINTS BEARING EARLIER REVISION DATES
REVISION DATES (PRELIMINARY STAGE ONLY)
SHEET 37 OF 65
DIST 04 COUNTY SF ROUTE 80 KILOMETER POST TOTAL PROJECT SHEET NO. 93 TOTAL SHEETS 137
REGISTERED GEOTECHNICAL ENGINEER
PLANS APPROVAL DATE
No. GE 2584 Exp. 12-31-00 GEOTECHNICAL STATE OF CALIFORNIA
FUGRO-EARTH MECHANICS, A JOINT VENTURE 7700, Edgewater Dr., Ste. 848, Oakland, CA 94621 (510) 562-8833, FAX (510) 562- 8856
The State of California or its officers or agents shall not be responsible for the accuracy or completeness of electronic copies of this plan sheet.
CONTRACT CHANGE ORDER NO. 235
SHEET 235 OF 280

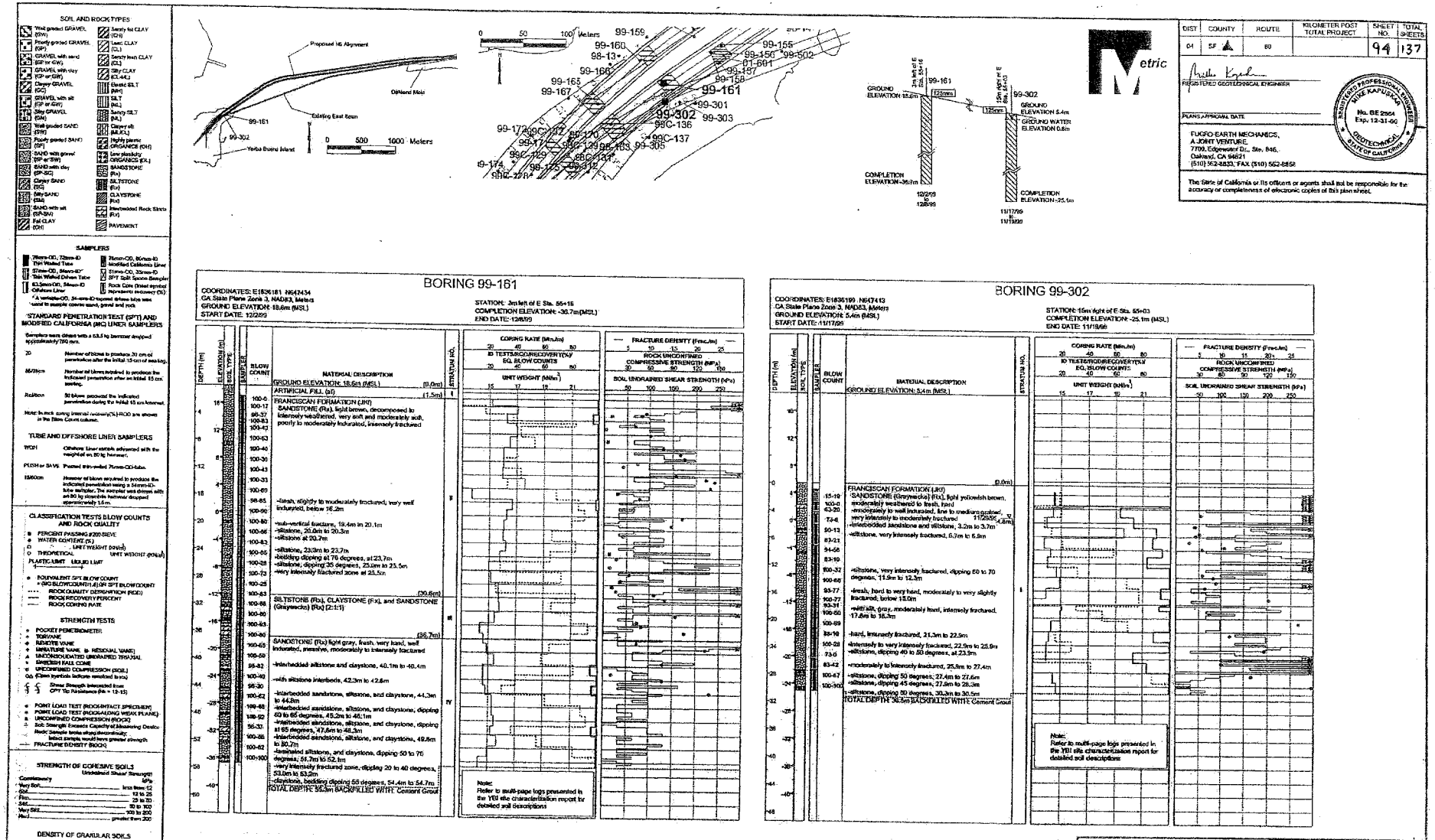
SOIL AND ROCK TYPES
Well graded GRAVEL (GW)
Poorly graded GRAVEL (GP)
GRAVEL with sand (GP or GW)
GRAVEL with clay (GP or GW)
Clayey GRAVEL (GC)
GRAVEL with silt (GP or GW)
Silty GRAVEL (GM)
Well graded SAND (SW)
Poorly graded SAND (SP)
SAND with gravel (SP or SW)
SAND with clay (SP-SC)
Clayey SAND (SC)
Silty SAND (SM)
SAND with silt (SP-SM)
Fat CLAY (CH)
Sandy fat CLAY (CH)
Lean CLAY (CL)
Sandy lean CLAY (CL)
Silty CLAY (CL-ML)
Elastic SILT (MH)
SILT (ML)
Sandy SILT (ML)
Clayey silt (ML/CL)
Highly plastic ORGANICS (OH)
Low plasticity ORGANICS (OL)
SANDSTONE (Rs)
SILTSTONE (Rs)
CLAYSTONE (Rs)
Interbedded Rock Strata (Rs)
PAVEMENT
SAMPLERS
Thin Walled Tube
Thin Walled Driven Tube
Offshore Liner
Modified California Liner
SPT Split Spoon Sampler
Rock Core (linear symbol represents recovery (%))
"A variable-OD, 34-mm-ID tapered drive tube was used to sample coarse sand, gravel and rock.
'STANDARD' PENETRATION TEST (SPT) AND MODIFIED CALIFORNIA (MC) LINER SAMPLERS
Samplers were driven with a 63.5 kg hammer dropped approximately 760 mm.
Number of blows to produce 30 cm of penetration after the initial 15 cm of seating.
Number of blows required to produce the indicated penetration after an initial 15 cm seating.
50 blows produced the indicated penetration during the initial 15 cm interval.
Note: In rock, some interval recovery(%) RQD are shown in the Blow Count column.
TUBE AND OFFSHORE LINER SAMPLERS
Offshore liner stands advanced with the weight of an 80 kg hammer.
Pushed thin-walled 76mm-OD tube.
Number of blows required to produce the indicated penetration using a 64mm-ID tube sampler. The sampler was driven with an 80 kg downhole hammer dropped approximately 1.5 m.
CLASSIFICATION TESTS BLOW COUNTS AND ROCK QUALITY
PERCENT PASSING #200 SIEVE
WATER CONTENT (%)
UNIT WEIGHT (kN/m³)
THEORETICAL UNIT WEIGHT (kN/m³)
PLASTIC LIMIT LIQUID LIMIT
EQUIVALENT SPT BLOW COUNT
(MC BLOWCOUNT/1.4) OR SPT BLOWCOUNT
ROCK QUALITY DESIGNATION (RQD)
ROCK RECOVERY PERCENT
ROCK CORING RATE
STRENGTH TESTS
POCKET PENETROMETER
TORVANE
MINIATURE VANE
MINIATURE VANE (e RESIDUAL VANE)
UNCONSOLIDATED UNDRAINED TRIAXIAL
SWEDISH FALL CONE
UNCONFINED COMPRESSION (SOIL)
Q&S (Class symbols indicate sensitivity)
Shear Strength Interpreted from CPT Tip Resistance (Ref. 1, 12-15)
POINT LOAD TEST (PERPENDICULAR SPECIMEN)
POINT LOAD TEST (PERPENDICULAR WEAK PLANE)
UNCONFINED COMPRESSION (ROCK)
Soil Strength Erosion Capacity of Measuring Device
Rock: Sample broke along discontinuity; Intact sample would have greater strength
FRACTURE DENSITY (ROCK)
STRENGTH OF COHESIVE SOILS
Undrained Shear Strength
Consistency
Very Soft
Soft
Firm
Stiff
Very Stiff
Hard
DENSITY OF GRANULAR SOILS
Descriptive Term
Relative Density (%)*
Very Loose
Loose
Medium Dense
Dense
Very Dense
*Estimated from sampler driving meters and CPT tip resistance.
Proposed HS Alignment
Existing East Span
Oakland Mole
Yerba Buena Island
99-161
99-302
99-159
99-160
98-13
99-166
99-165
99-167
99-155
99-156
99-502
01-691
99-157
99-158
99-161
99-301
99-302
99-303
98C-136
99C-137
99-305
99-172
99C-142
99-170
99-171
99C-139
98C-133
99C-129
98C-134
99-174
99-175
98C-132
98C-131
0 50 100 Meters
0 500 1000 Meters
GROUND ELEVATION 18.6m
COMPLETION ELEVATION=36.7m
12/2/99 to 12/8/99
GROUND ELEVATION 5.4m
GROUND WATER ELEVATION 0.6m
COMPLETION ELEVATION=-25.1m
11/17/99 to 11/19/99
BORING 99-161
COORDINATES: E1826181 , N647434
CA State Plane Zone 3, NAD83, Meters
GROUND ELEVATION: 18.6m (MSL)
START DATE: 12/2/99
STATION: 3m left of E Sta. 55+15
COMPLETION ELEVATION: -36.7m (MSL)
END DATE: 12/8/99
DEPTH (m)
ELEVATION (m)
SOIL TYPE
SAMPLER
BLOW COUNT
MATERIAL DESCRIPTION
STRATUM NO.
CORING RATE (Min./m)
ID TESTS/RQD/RECOVERY/BLOW COUNTS
ROCK UNCONFINED COMPRESSIVE STRENGTH (MPa)
UNIT WEIGHT (kN/m³)
FRACTURE DENSITY (Frac./m)
SOIL UNDRAINED SHEAR STRENGTH (kPa)
GROUND ELEVATION: 18.6m (MSL) (0.0m)
ARTIFICIAL FILL (af) (1.5m)
FRANCISCAN FORMATION (JKf)
SANDSTONE (Rs), light brown, decomposed to intensely weathered, very soft and moderately soft, poorly to moderately indurated, intensely fractured
-fresh, slightly to moderately fractured, very well indurated, below 16.2m
-sub-vertical fractures, 19.4m to 20.1m
-siltstone, 20.0m to 20.3m
-siltstone at 20.7m
-siltstone, 23.0m to 23.7m
-bedding dipping at 70 degrees, at 23.7m
-siltstone, dipping 35 degrees, 25.4m to 25.5m
-very intensely fractured zone at 25.5m
(30.6m)
SILTSTONE (Rs), CLAYSTONE (Rs), and SANDSTONE (Grayvacke) (Rs) (2:1:1)
(36.7m)
SANDSTONE (Rs) light gray, fresh, very hard, well indurated, massive, moderately to intensely fractured
-interbedded siltstone and claystone, 40.1m to 40.4m
-with siltstone interbeds, 42.3m to 42.6m
-interbedded sandstone, siltstone, and claystone, 44.3m to 44.8m
-interbedded sandstone, siltstone, and claystone, dipping 60 to 65 degrees, 45.2m to 46.1m
-interbedded sandstone, siltstone, and claystone, dipping at 65 degrees, 47.4m to 48.3m
-interbedded sandstone, siltstone, and claystone, 49.6m to 50.7m
-laminated siltstone, and claystone, dipping 50 to 70 degrees, 51.7m to 52.1m
-very intensely fractured zone, dipping 20 to 40 degrees, 53.0m to 53.2m
-claystone, bedding dipping 55 degrees, 54.4m to 54.7m
TOTAL DEPTH: 56.5m BACKFILLED WITH: Cement Grout
Note: Refer to multi-page logs presented in the YBI site characterization report for detailed soil descriptions
BORING 99-302
COORDINATES: E1836199 , N647413
CA State Plane Zone 3, NAD83, Meters
GROUND ELEVATION: 5.4m (MSL)
START DATE: 11/17/99
STATION: 15m right of E Sta. 55+03
COMPLETION ELEVATION: -25.1m (MSL)
END DATE: 11/19/99
GROUND ELEVATION: 5.4m (MSL) (0.0m)
FRANCISCAN FORMATION (JKf)
SANDSTONE (Greywacke) (Rs), light yellowish brown, moderately weathered to fresh, (fair)
-moderately to well indurated, fine to medium grained, very intensely to moderately fractured 11/29/99 (4.8m)
-interbedded sandstone and siltstone, 3.2m to 3.7m
-siltstone, very intensely fractured, 6.7m to 6.8m
-siltstone, very intensely fractured, dipping 60 to 70 degrees, 11.5m to 12.3m
-fresh, hard to very hard, moderately to very slightly fractured, below 15.0m
-with silt, gray, moderately hard, intensely fractured, 17.6m to 18.3m
-hard, intensely fractured, 21.3m to 22.5m
-intensely to very intensely fractured, 22.9m to 23.9m
-siltstone, dipping 40 to 50 degrees, at 23.9m
-moderately to intensely fractured, 25.6m to 27.4m
-siltstone, dipping 50 degrees, 27.4m to 27.6m
-siltstone, dipping 45 degrees, 27.6m to 28.3m
-siltstone, dipping 50 degrees, 30.3m to 30.5m
TOTAL DEPTH: 30.5m BACKFILLED WITH: Cement Grout
Note: Refer to multi-page logs presented in the YBI site characterization report for detailed soil descriptions
Metric
DIST 04
COUNTY SF
ROUTE 80
KILOMETER POST TOTAL PROJECT
SHEET NO. 94
TOTAL SHEETS 137
REGISTERED GEOTECHNICAL ENGINEER
PLANS APPROVAL DATE
REGISTERED PROFESSIONAL ENGINEER MIKE KAPUSKAR No. GE 2564 Exp. 12-31-00 GEOTECHNICAL STATE OF CALIFORNIA
FUGRO-EARTH MECHANICS, A JOINT VENTURE 7700 Edgewater Dr., Ste. 846, Oakland, CA 94621 (510) 562-8830, FAX (510) 562-8852
The State of California or its officers or agents shall not be responsible for the accuracy or completeness of electronic copies of this plan sheet.
ROBERT PRICE / SABA MOHAN
GEOTECHNICAL DESIGN OVERSIGHT
DRAWN BY C. CACERES
CHECKED BY M. KAPUSKAR, S. SICILIANO
L. FLORE, E.CHASE
FIELD INVESTIGATOR
DATE SEE ABOVE
PREPARED FOR THE STATE OF CALIFORNIA DEPARTMENT OF TRANSPORTATION
M. KAPUSKAR
PROJECT ENGINEER
BRIDGE NO. 34-0006 UR
KM POST
POST MILE 12.8
CU 04251 EA 012031
ORIGINAL SCALE IN CENTIMETERS FOR REDUCED PLANS 0 1 2 3 4 5 6 7 8 9 10
DISREGARD PRINTS BEARING EARLIER REVISION DATES
REVISION DATES (PRELIMINARY STAGE ONLY)
SHEET 38 OF 65
SAN FRANCISCO OAKLAND BAY BRIDGE
EAST SPAN SEISMIC SAFETY PROJECT
YBI TRANSITION STRUCTURES
LOG OF TEST BORINGS NO. 14
CONTRACT NO. 04-0120J4
CONTRACT CHANGE ORDER NO. 74
SHEET 235 OF 250

SOIL AND ROCK TYPES

Well graded GRAVEL (GW)
Poorly graded GRAVEL (GP)
GRAVEL with sand (GP or GW)
GRAVEL with clay (GP or GW)
Clayey GRAVEL (GC)
GRAVEL with silt (GP or GW)
Silty GRAVEL (GM)
Well graded SAND (SW)
Poorly graded SAND (SP)
SAND with gravel (SP or SW)
SAND with clay (SP-SC)
Clayey SAND (SC)
Silty SAND (SM)
SAND with silt (SP-SM)
Fat CLAY (CH)
Sandy fat CLAY (CH)
Lean CLAY (CL)
Sandy lean CLAY (CL)
Silty CLAY (CL-ML)
Elastic SILT (MH)
SILT (ML)
Sandy SILT (ML)
Clayey silt (ML/CL)
Highly plastic ORGANICS (OH)
Low plasticity ORGANICS (OL)
SANDSTONE (Rs)
SILTSTONE (Rs)
CLAYSTONE (Rs)
Interbedded Rock Strata (Rs)
PAVEMENT

SAMPLERS

75mm-OD, 72mm-ID Thin Walled Tube
87mm-OD, 84mm-ID Thin Walled Driven Tube
63.5mm-OD, 54mm-ID Cal/modified Liner
76mm-OD, 72mm-ID Modified California Liner
61mm-OD, 35mm-ID SPT (Split Spoon Sampler)
Rock Core (bars symbol represents recovery (%))

* A variable-OD, 54-mm-ID tapered driven tube was used to sample coarse sand, gravel and rock

STANDARD PENETRATION TEST (SPT) AND MODIFIED CALIFORNIA (MC) LINER SAMPLERS

Samplers were driven with a 63.5 kg hammer dropped approximately 760 mm.

20 — Number of blows to produce 30 cm of penetration after the initial 15 cm of seating.

80/8cm — Number of blows required to produce the indicated penetration after an initial 15 cm seating.

Ref/8cm — 50 blows produced the indicated penetration during the initial 15 cm interval.

Note: In rock coring interval recovery(53-100) are shown in the Blow Count column.

TUBE AND OFFSHORE LINER SAMPLERS

WOH — Others: Liner sample advanced with the weight of an 85 kg hammer.

PUSH or SAVE — Pushed thin-walled 76mm-OD tube.

Hit/6inch — Number of blows required to produce the indicated penetration using a 76mm-ID tube sampler. The sampler was driven with an 80 kg downslide hammer dropped approximately 1.5 m.

CLASSIFICATION TESTS BLOW COUNTS AND ROCK QUALITY

- PERCENT PASSING #200 SIEVE
- WATER CONTENT (%)
- UNIT WEIGHT (KN/m³)
- THEORETICAL UNIT WEIGHT (KN/m³)

PLASTIC LIMIT LIQUID LIMIT

- EQUIVALENT SPT BLOW COUNT + (MC BLOWCOUNT/1.4) OR SPT BLOWCOUNT
- ROCK QUALITY DESIGNATION (RQD)
- ROCK RECOVERY PERCENT
- ROCK CORING RATE

STRENGTH TESTS

- POCKET PENETROMETER
- TORVANE
- REMOTE VANE
- MINIATURE VANE (S= RESIDUAL VANE)
- UNCONSOLIDATED UNDRAINED TRIAXIAL
- SWEDISH FALL CONE
- UNCONFINED COMPRESSION (ECOL)
- Cup (Open symbols indicate remolded tests)
- Sleeve Strength Interpreted from CPT Tip Resistance (Rf= 13-15)
- POINT LOAD TEST (ROCK-INTACT SPECIMEN)
- POINT LOAD TEST (RQD/ALONG WEAK PLANE)
- UNCONFINED COMPRESSION (RJOG)
- Soil Strength Exceeds Capacity of Measuring Device; Rock Sample looks very structurally; Intact sample would have greater strength

FRACTURE DENSITY (ROCK)

STRENGTH OF COHESIVE SOILS

Consistency	Undrained Shear Strength, kPa
Very Soft	less than 12
Soft	12 to 25
Firm	25 to 50
Stiff	50 to 100
Very Stiff	100 to 200
Hard	greater than 200

DENSITY OF GRANULAR SOILS

Descriptive Term	Relative Density (%)*
Very Loose	less than 15
Loose	15 to 35
Medium Dense	35 to 65
Dense	65 to 85
Very Dense	greater than 85

*Estimated from sampler blow count and CPT tip resistance.

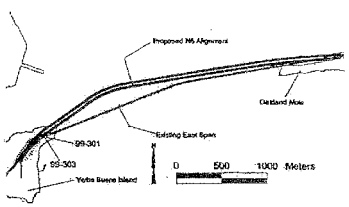

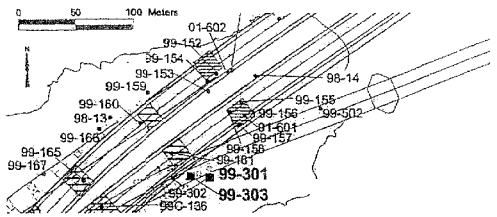

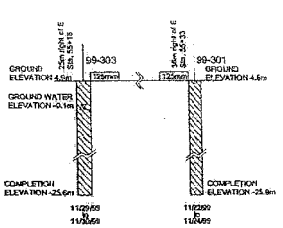

Metric

DIST	COUNTY	ROUTE	KILOMETER POST TOTAL PROJECT	SHEET NO.	TOTAL SHEETS
04	SF	80		95	137

REGISTERED GEOTECHNICAL ENGINEER

PLANS APPROVAL DATE

REGISTERED PROFESSIONAL ENGINEER — RAHUL KAPUSKAR — No. GE 2554 Exp. 12-31-00 — GEOTECHNICAL — STATE OF CALIFORNIA

FUGRO-EARTH MECHANICS, A JOINT VENTURE, 7700 Edgewater Dr., Ste. 846, Oakland, CA 94621, (510) 562-8833/ FAX (510) 562-8856

The State of California or its officers or agents shall not be responsible for the accuracy or completeness of electronic copies of this plan sheet.

BORING 99-303

COORDINATES: E1826182 N647412
CA State Plane Zone 3, NAD83, Meters
GROUND ELEVATION: 4.9m (MSL)
START DATE: 11/29/99

STATION: 25m right of E Sta. 55+18
COMPLETION ELEVATION: -25.6m (MSL)
END DATE: 11/30/99

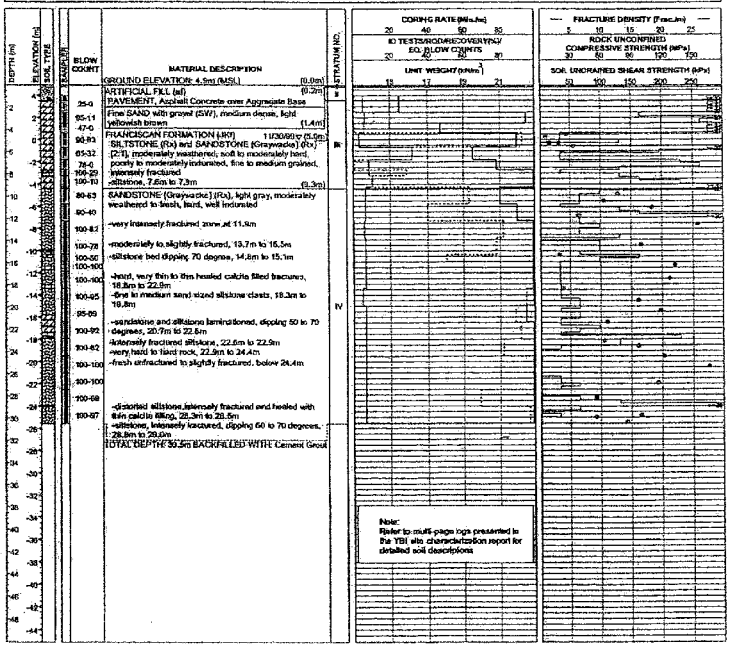

BORING 99-301

COORDINATES: E1836217, N647412
CA State Plane Zone 3, NAD83, Meters
GROUND ELEVATION: 4.6m (MSL)
START DATE: 11/2/99

STATION: 30m right of E Sta. 55+33
COMPLETION ELEVATION: -25.5m (MSL)
END DATE: 11/3/99

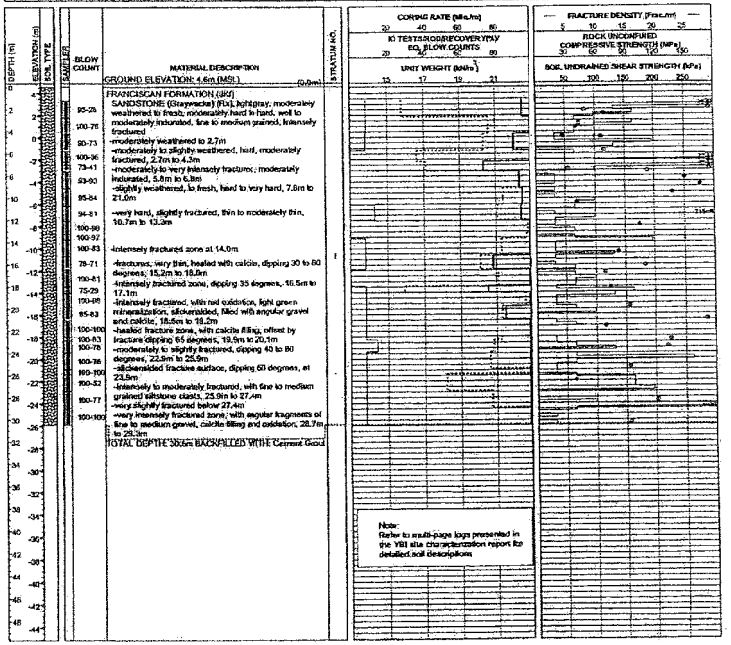

ROBERT PRICE / SABA MOHAN — GEOTECHNICAL DESIGN OVERSIGHT	DRAWN BY: J.PALMER	CHECKED BY: M. KAPUSKAR	L.FLUKE — FIELD INVESTIGATION — DATE: SEE ABOVE	M. KAPUSKAR — PROJECT ENGINEER

PREPARED FOR THE
STATE OF CALIFORNIA
DEPARTMENT OF TRANSPORTATION

ORIGINAL SCALE IN CENTIMETERS FOR REDUCED PLANS

CU 04251
EA 012051

BRIDGE NO. 34-0006 L/R
KM POST 12.8
POST MILE

SAN FRANCISCO OAKLAND BAY BRIDGE
EAST SPAN SEISMIC SAFETY PROJECT

YBI TRANSITION STRUCTURES

LOG OF TEST BORINGS NO. 15

DISREGARD PRINTS BEARING EARLIER REVISION DATES → REVISION DATES (PRELIMINARY STAGE ONLY)

SHEET 39 OF 65

CONTRACT NO. 04-012034
CONTRACT CHANGE ORDER NO. 73
SHEET 23 OF 68

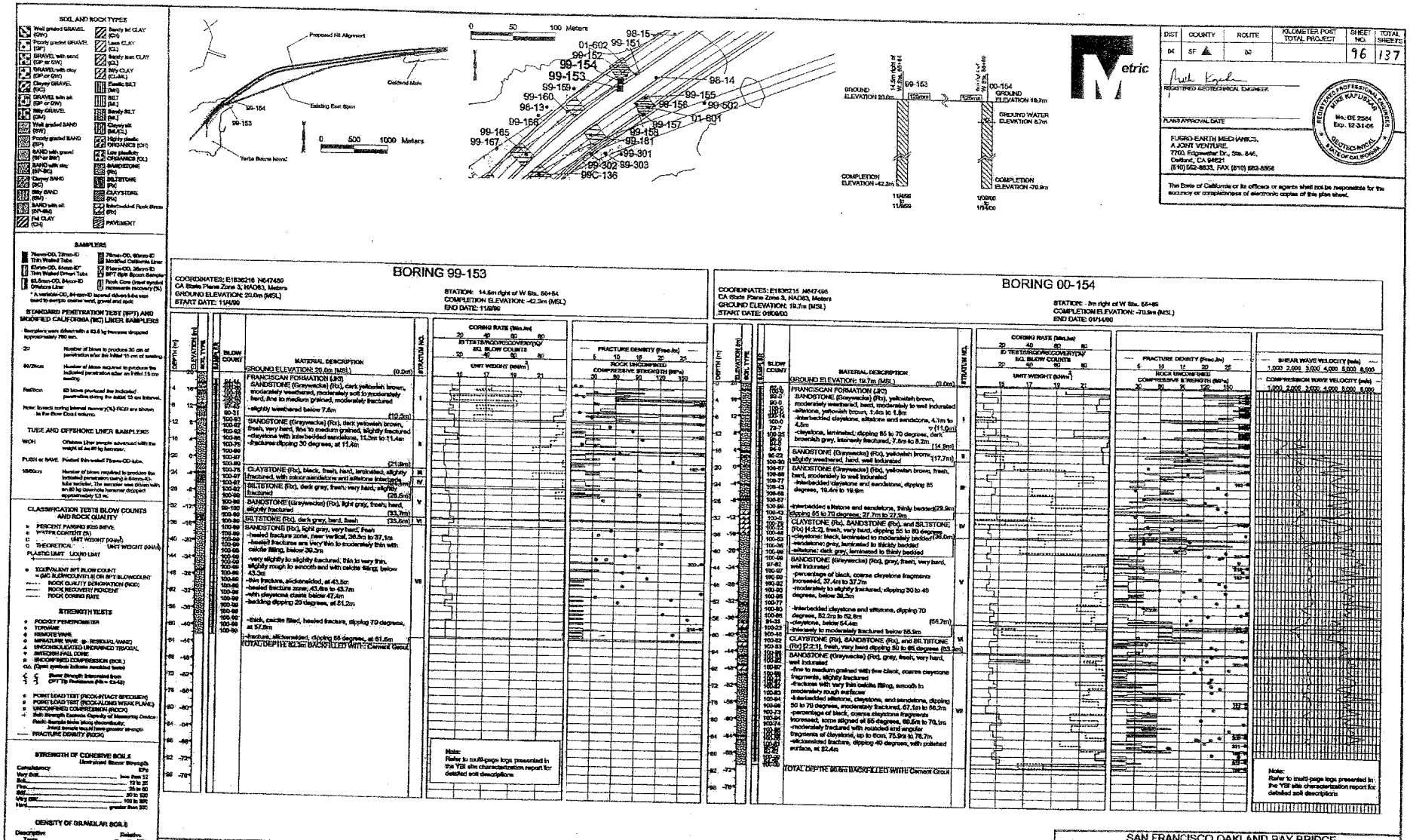

CONTRACT CHANGE ORDER NO 04-012124

ENGINEER'S 240 OF 730

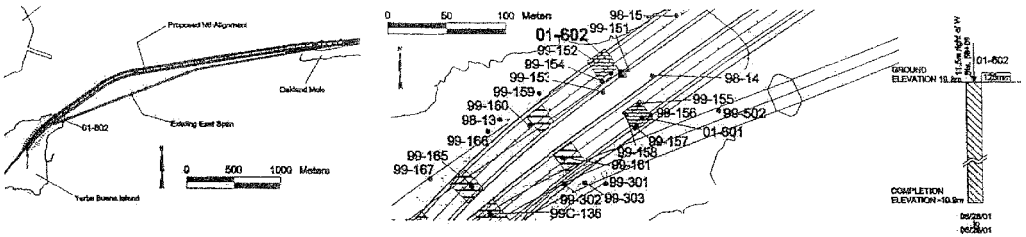

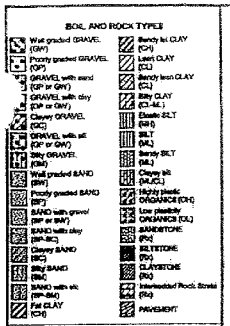

BORING 01-602

COORDINATES: E1835234 N847606
CA State Plane Zone 3, NAD83, Meters
GROUND ELEVATION: 10.8m (MSL)
START DATE: 06/28/01

STATION: 11.5m right of W Sta. 55+09
COMPLETION ELEVATION: -10.9m (MSL)
END DATE: 06/29/01

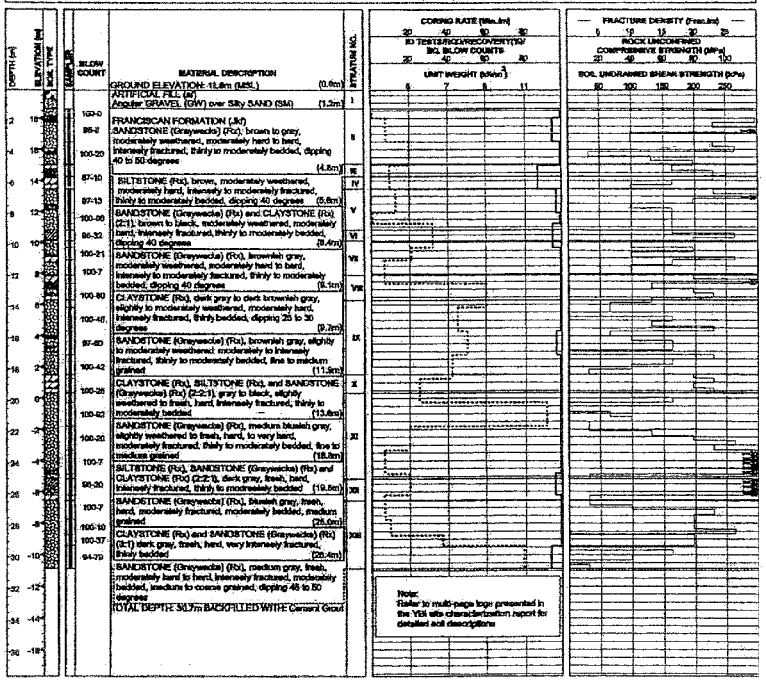

DIST	COUNTY	ROUTE	KILOMETER POST TOTAL PROJECT	SHEET NO.	TOTAL SHEETS
04	SF	80		97	137

REGISTERED GEOTECHNICAL PROFESSIONAL

PLANS APPROVAL DATE

REGISTERED PROFESSIONAL ENGINEER MIKE KAPUSKAR No. GE 2554 Exp. 12-31-06 GEOTECHNICAL STATE OF CALIFORNIA

FUGRO-EARTH MECHANICS, A JOINT VENTURE 7700 Edgewater Dr., Ste. 840, Oakland, CA 94621 (510) 562-8833, FAX (510) 562-8858

The State of California or its officers or agents shall not be responsible for the accuracy or completeness of electronic copies of this plan sheet.

CONTRACT NO. 04-012.0R4

CONTRACT CHANGE ORDER NO. 73

SHEET 241 OF 280

ROBERT PRICE / SAIBA MOHAN GEOTECHNICAL DESIGN OVERSIGHT	DRAWN BY	A. PALOMARES	B. SCHELL FIELD INVESTIGATION DATE SEE ABOVE	PREPARED FOR THE STATE OF CALIFORNIA DEPARTMENT OF TRANSPORTATION	M. KAPUSKAR PROJECT ENGINEER
	CHECKED BY	S. SICILIANO			

ORIGINAL SCALE IN CENTIMETERS FOR REDUCED PLANS 0 1 2 3 4 5 6 7 8 9 10

DU 04251 EA 012051

BRIDGE NO.	34-0006 UR
KM POST	12.8
POST MILE	

SAN FRANCISCO OAKLAND BAY BRIDGE EAST SPAN SEISMIC SAFETY PROJECT

YBI TRANSITION STRUCTURES

LOG OF TEST BORINGS NO. 17

DISREGARD PRINTS BEARING EARLIER REVISION DATES

REVISION DATES (PRELIMINARY STAGE ONLY)

SHEET	OF
41	65

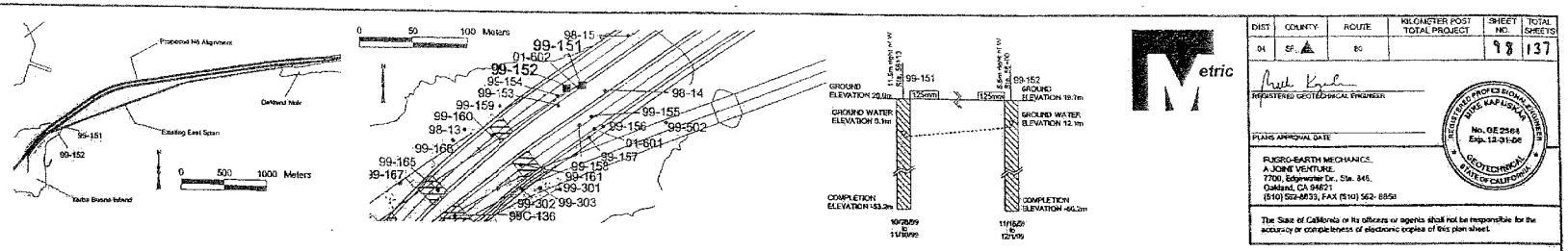

Metric

DIST	COUNTY	ROUTE	KILOMETER POST TOTAL PROJECT	SHEET NO.	TOTAL SHEETS
04	SF	80		18	137

REGISTERED GEOTECHNICAL ENGINEER

PLANS APPROVAL DATE

REGISTERED PROFESSIONAL ENGINEER — MIKE KAPUSKAR — No. GE 2564 — Exp. 12-31-09 — GEOTECHNICAL — STATE OF CALIFORNIA

RUSRO-EARTH MECHANICS
A JOINT VENTURE
2700 Bridgeway Dr., Ste. 845
Oakland, CA 94621
(510) 562-6833, FAX (510) 562-6858

The State of California or its officers or agents shall not be responsible for the accuracy or completeness of electronic copies of this plan sheet.

SOIL AND ROCK TYPES

Well graded GRAVEL (GW)
Poorly graded GRAVEL (GP)
GRAVEL with sand (GP or GW)
GRAVEL with clay (GP or GW)
Clayey GRAVEL (GC)
GRAVEL with silt (GP or GW)
Silty GRAVEL (GM)
Well graded SAND (SW)
Poorly graded SAND (SP)
SAND with silt (SP or SW)
SAND with clay (SP-SC)
Clayey SAND (SC)
Silty SAND (SM)
SAND with silt (SP-SM)
Fat CLAY (CH)
Sandy fat CLAY (CH)
Lean CLAY (CL)
Sandy lean CLAY (CL)
Silty CLAY (CL-ML)
Elastic SILT (MH)
SILT (ML)
Sandy SILT (ML)
Clayey silt (MI/CL)
Highly plastic ORGANICS (OH)
Low plasticity ORGANICS (OL)
SANDSTONE (Rx)
SILTSTONE (Rx)
CLAYSTONE (Rx)
Interbedded Rock Strata (Rx)
PAVEMENT

SAMPLERS

76mm-OD, 72mm-ID Thin Walled Tube
76mm-OD, 60mm-ID Modified California Liner
87mm-OD, 54mm-ID* Thin Walled Driven Tube
3 3/4in-OD, 3in-ID SPT Split Spoon Sampler
63.5mm-OD, 50mm-ID Osterberg Liner
Rock Core (lines) symbol represents recovery (%)

* A variable-OD, 56-mm-ID tapered driven tube was used in sample counter sand, gravel and rock.

STANDARD PENETRATION TEST (SPT) AND MODIFIED CALIFORNIA (MC) LINER SAMPLERS

Samplers were driven with a 63.5 kg hammer dropped approximately 760 mm.

20 — Number of blows to produce 30 cm of penetration after the initial 15 cm of seating.

66/20cm — Number of blows required to produce the indicated penetration after an initial 15 cm seating.

5in/10cm — 20 blows produced the indicated penetrance during the initial 15 cm interval.

Note: In rock using internal recovery(%) RQD are shown in the Blow Count column.

TUBE AND OFFSHORE LINER SAMPLERS

WOH — Offshore Liner sample advanced with the weight of an 80 kg hammer.

PUSH or SAVE — Pushed thin-walled 76mm-OD tube.

15/60cm — Number of blows required to produce the indicated penetration using a 63.5kg-ID tube sampler. The sample was driven with an 80 kg downhole hammer dropped approximately 1.5 m.

CLASSIFICATION TESTS BLOW COUNTS AND ROCK QUALITY

n PERCENT PASSING #200 SIEVE
w WATER CONTENT (%)
g UNIT WEIGHT (KN/m³)
G THEORETICAL UNIT WEIGHT (KN/m³)
PLASTIC LIMIT LIQUID LIMIT
e EQUIVALENT SPT BLOW COUNT
= (MC BLOWCOUNT/1.8) OR SPT BLOWCOUNT
RQD ROCK QUALITY DESIGNATION (ROD)
REC ROCK RECOVERY PERCENT
CR ROCK CORING RATE

STRENGTH TESTS

P POCKET PENETROMETER
T TORVANE
R REMOTE VANE
M MINIATURE VANE, fp RESIDUAL VANE
U UNCONSOLIDATED UNDRAINED TRIAXIAL
V SWEDISH FALL CONE
C UNCONFINED COMPRESSION (SOIL)
Qu Elgeri symbols indicate classified tests)
Shear Strength Interpreted from CPT Tip Resistance (fig. x 12-15)
PL POINT LOAD TEST (ROCK-INTACT SPECIMEN)
PL POINT LOAD TEST (ROCK-ALONG WEAK PLANE)
C UNCONFINED COMPRESSION (ROCK)
Shear Strength Exceeds Capacity of Measuring Device
Note: Sample bore slightly discontinuity, intact sample would have greater strength
FRACTURE DENSITY (ROCK)

STRENGTH OF COHESIVE SOILS

Consistency	Undrained Shear Strength, kPa
Very Soft	less than 12
Soft	12 to 25
Firm	25 to 50
Stiff	50 to 100
Very Stiff	100 to 200
Hard	greater than 200

DENSITY OF GRANULAR SOILS

Descriptive Term	Relative Density (%)*
Very Loose	less than 15
Loose	15 to 35
Medium Dense	35 to 65
Dense	65 to 85
Very Dense	greater than 85

*Calculated from sampler driving record and CPT tip resistance.

BORING 99-151

COORDINATES: E1836238 N647508
CA State Plane Zone 3, NAD83, Meters
GROUND ELEVATION 20.0m (MSL)
START DATE: 10/28/09

STATION: 11.5m right of W Sta. 56+13
COMPLETION ELEVATION: -53.2m (MSL)
END DATE: 11/18/09

MATERIAL DESCRIPTION

GROUND ELEVATION: 20.0m (MSL) (0.2m)
ARTIFICIAL FILL (af) (1.5m)
FRANCISCAN FORMATION (JKf)
SANDSTONE (Graywacke) (Rx), yellowish brown, intensely weathered, moderately hard (7.3m)
SANDSTONE (Graywacke) (Rx), yellowish brown, moderately weathered, moderately hard (11.6m) (10.3m)
CLAYSTONE (Rx), SILTSTONE (Rx), and SANDSTONE (Graywacke) (Rx) [1:1:0.5], slightly to moderately weathered, hard (13.5m) (15.3m)
CLAYSTONE (Rx), SILTSTONE (Rx), and SANDSTONE (Graywacke) (Rx) [1:1:0.5], fresh, hard (18.4m)
SANDSTONE (Graywacke) (Rx), light gray, fresh, hard
-interbedded siltstone and claystone, dipping 30 degrees, 21.0m to 21.2m (26.9m)
CLAYSTONE (Rx), SILTSTONE (Rx), and SANDSTONE (Graywacke) (Rx) [2:1:1], fresh, hard, intensely to moderately fractured (33.1m)
SANDSTONE (Graywacke) (Rx), light gray, fresh, hard, fine to medium grained (36.3m)
SANDSTONE (Graywacke) (Rx), CLAYSTONE (Rx), SILTSTONE (Rx) [10:4:1], fresh, hard (42.1m)
SANDSTONE (Graywacke) (Rx), light gray, fresh, very hard
-claystone, intensely fractured, 44.2m to 45.1m
-interbedded claystone and siltstone, moderately soft to very hard, laminated to thickly bedded, very intensely to moderately fractured, 53.2m to 54.7m
-vertical fracture zone, well developed slickensides, 54.1m to 55.6m (54.4m)
-sandstone, 55.4m to 56.8m
SANDSTONE (Graywacke) (Rx), light gray, fresh, very hard
-interbedded siltstone and claystone [1:1], dipping 50 degrees, 65.1m to 65.5m
TOTAL DEPTH: 71.2m BACKFILLED WITH: Cement Grout

Note: Refer to multi-page logs presented in the YBI site characterization report for detailed soil descriptions

BORING 99-152

COORDINATES: E1836223 N647505
CA State Plane Zone 3, NAD83, Meters
GROUND ELEVATION: 19.7m (MSL)
START DATE: 11/18/09

STATION: 5.6m right of W Sta. 56+00
COMPLETION ELEVATION: -60.2m (MSL)
END DATE: 12/1/09

MATERIAL DESCRIPTION

GROUND ELEVATION: 19.7m (MSL) (0.0m)
ARTIFICIAL FILL (af) (1.5m)
SEDIMENTARY DEPOSITS (Qa)
-Silty Fine SAND (SM), medium loose, brown, dry to slightly moist, with small pieces of rock fragments (4.1m)
FRANCISCAN FORMATION (JKf)
CLAYSTONE (Rx), SILTSTONE (Rx), and SANDSTONE (Graywacke) (Rx) [5:4:2], intensely weathered, soft to moderately soft, intensely fractured (6.1m)
CLAYSTONE (Rx), SILTSTONE (Rx), and SANDSTONE (Graywacke) (Rx) [5:4:2], moderately weathered, moderately hard to hard, intensely fractured (10.7m)
CLAYSTONE (Rx), SILTSTONE (Rx), and SANDSTONE (Graywacke) (Rx) [5:4:2], slightly weathered, moderately hard to hard, intensely fractured (12.8m)
CLAYSTONE (Rx), SILTSTONE (Rx), and SANDSTONE (Graywacke) (Rx) [5:4:2], fresh, moderately hard to hard, moderately fractured (13.7m)
SANDSTONE (Graywacke) (Rx), fresh, gray, very hard, fine to medium grained (26.5m)
CLAYSTONE (Rx), SANDSTONE (Graywacke) (Rx), and SILTSTONE (Rx) [6:4:2], fresh, hard to very hard, slightly to moderately fractured (30.0m)
SANDSTONE (Graywacke) (Rx), gray, fresh, very hard, slightly fractured, fine to medium grained (43.7m)
SANDSTONE (Graywacke) (Rx), SILTSTONE (Rx), and CLAYSTONE (Rx) [3:2:2], fresh, moderately hard to very hard (50.1m)
SANDSTONE (Graywacke) (Rx), light gray, fresh, very hard; slightly fractured, very thin lining, smooth to moderately rough
-interbedded claystone and siltstone, bedding dipping 30 to 50 degrees, 53.2m to 53.6m
-gradational contact, siltstone, with abundant calcite filled fractures, 65.2m to 65.9m
-moderately fractured, very thin, slightly rough to smooth, dipping 40 to 60 degrees, below 78.3m
TOTAL DEPTH: 79.5m BACKFILLED WITH: Cement Grout

Note: Refer to multi-page logs presented in the YBI site characterization report for detailed soil descriptions

ROBERT PRICE / SABA MOHAN — GEOTECHNICAL DESIGN SUPERVISOR	DRAWN BY	C. CACERES	B. SCHELL — FIELD INVESTIGATION	PREPARED FOR THE STATE OF CALIFORNIA DEPARTMENT OF TRANSPORTATION	M. KAPUSKAR — PROJECT ENGINEER
	CHECKED BY	S. SICILIANO	DATE SEE ABOVE		

ORIGINAL SCALE IN CENTIMETERS FOR REDUCED PLANS 0 1 2 3 4 5 6 7 8 9 10

BRIDGE NO.	34-0006 L/R
KM POST	12.8
POST MILE	

CU 042511
EA 012051

SAN FRANCISCO OAKLAND BAY BRIDGE
EAST SPAN SEISMIC SAFETY PROJECT

YBI TRANSITION STRUCTURES

LOG OF TEST BORINGS NO. 18

DISREGARD PRINTS BEARING EARLIER REVISION DATES

REVISION DATES (PRELIMINARY STAGE ONLY)

SHEET 42 OF 65

CONTRACT NO. 04-0120F4

SHEET 242 OF 280

SOIL AND ROCK TYPES

Well graded GRAVEL (GW)
Poorly graded GRAVEL (GP)
GRAVEL with silt (GP or GW)
GRAVEL with clay (GP or GW)
Clayey GRAVEL (GC)
GRAVEL with silt (GP or GW)
Silty GRAVEL (GM)
Well graded SAND (SW)
Poorly graded SAND (SP)
SAND with gravel (SP or SW)
SAND with clay (SP-SC)
Clayey SAND (SC)
Silty SAND (SM)
SAND with silt (SP-SM)
Fat CLAY (CH)
Sandy fat CLAY (CH)
Lean CLAY (CL)
Sandy lean CLAY (CL)
Silty CLAY (CL-ML)
Elastic SILT (MH)
SILT (ML)
Sandy SILT (ML)
Clayey silt (ML/CL)
Highly plastic ORGANICS (OH)
Low plasticity ORGANICS (OL)
SANDSTONE (Rs)
SILTSTONE (Rs)
CLAYSTONE (Rc)
Interbedded Rock Strata (Ri)
PAVEMENT

SAMPLERS

76mm-OD, 72mm-ID Thin Walled Tube
75mm-OD, 54mm-ID* Thin Walled Dakota Tube
63.5mm-OD, 54mm-ID California Liner
76mm-OD, 60mm-ID Modified California Liner
63mm-OD, 35mm-ID SPT Split Spoon Sampler
Rock Core Barrel, symbol represents recovery (%)

* A variable-OD, 54-mm-ID tapered driven tube was used to sample coarse sand, gravel and rock

STANDARD PENETRATION TEST (SPT) AND MODIFIED CALIFORNIA (MC) LINER SAMPLERS

Samplers were driven with a 63.5 kg hammer dropped approximately 760 mm.

20 — Number of blows to produce 60 mm of penetration after the initial 15 cm of seating.

60/23cm — Number of blows required to produce the indicated penetration after an initial 15 cm seating.

Ref/8cm — 50 blows produced the indicated penetration during the initial 15 cm interval.

Note: In rock using internal recovery (%) RQD are shown in the Blow Count column.

TUBE AND OFFSHORE LINER SAMPLERS

WOH — Offshore Liner sample advanced with the weight of an 80 kg hammer.

PUSH or SAVE — Pushed thin-walled 76mm-OD tube.

15/60cm — Number of blows required to produce the indicated penetration using a 54mm-ID tube sampler. The sampler was driven with an 80 kg downhole hammer dropped approximately 1.5 m.

CLASSIFICATION TESTS BLOW COUNTS AND ROCK QUALITY

- PERCENT PASSING #200 SIEVE
- WATER CONTENT (%)
- UNIT WEIGHT (KN/m³)
- THEORETICAL — UNIT WEIGHT (KN/m³)
- PLASTIC LIMIT, LIQUID LIMIT
- EQUIVALENT SPT BLOW COUNT = (MC BLOWCOUNT)/4 OR SPT BLOWCOUNT
- ROCK QUALITY DESIGNATION (RQD)
- ROCK RECOVERY PERCENT
- ROCK CORING RATE

STRENGTH TESTS

- POCKET PENETROMETER
- TORVANE
- REMOTE VANE
- MINIATURE VANE (R RESIDUAL VANE)
- UNCONSOLIDATED UNDRAINED TRIAXIAL
- SWEDISH FALL CONE
- UNCONFINED COMPRESSION (SOIL)
- (Open symbols indicate remolded test)
- Shear Strength Interpreted from CPT Tip Resistance (qc ÷ 12.15)
- POINT LOAD TEST (ROCK-NOT AT CONTACT SPECIMEN)
- POINT LOAD TEST (ROCK-ALONG WEAK PLANE)
- UNCONFINED COMPRESSION (ROCK)
- Soft Strength Exceeds Capacity of Measuring Device
- Rock: Sample broke along discontinuity; Intact sample would have greater strength
- FRACTURE DENSITY (RQD)

STRENGTH OF COHESIVE SOILS

Undrained Shear Strength

Consistency	kPa
Very Soft	less than 12
Soft	12 to 25
Firm	25 to 50
Stiff	50 to 100
Very Stiff	100 to 200
Hard	greater than 200

DENSITY OF GRANULAR SOILS

Descriptive Term	Relative Density (%)*
Very Loose	less than 15
Loose	15 to 35
Medium Dense	35 to 65
Dense	65 to 85
Very Dense	greater than 85

*Estimated from sampler driving record and CPT tip resistance.

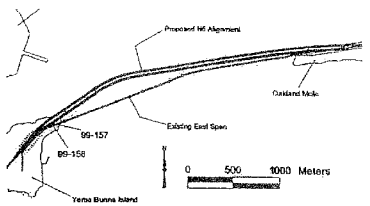

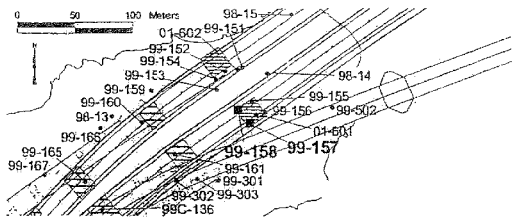

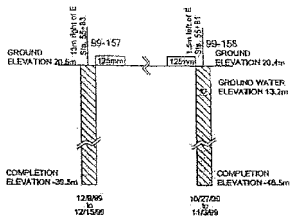

Metric

DIST	COUNTY	ROUTE	KILOMETER POST TOTAL PROJECT	SHEET NO.	TOTAL SHEETS
04	SF	80		99	137

REGISTERED GEOTECHNICAL ENGINEER

PLANS APPROVAL DATE

REGISTERED PROFESSIONAL ENGINEER — MIKE KAPUSKAR — No. GE 2564 Exp. 12-31-00 — GEOTECHNICAL — STATE OF CALIFORNIA

RUBRO-EARTH MECHANICS, JOINT VENTURE
2700, Edgewater Dr., Ste. 846,
Oakland, CA 94621
(510) 562-8833, FAX (510) 562-8850

The State of California or its officers or agents shall not be responsible for the accuracy or completeness of electronic copies of this plan sheet.

BORING 99-157

COORDINATES: E1836244 N647460
CA State Plane Zone 3, NAD83, Meters
GROUND ELEVATION: 20.6m (MSL)
START DATE: 12/8/99

STATION: 13m right of E Sta. 55+83
COMPLETION ELEVATION: -36.5m (MSL)
END DATE: 12/15/99

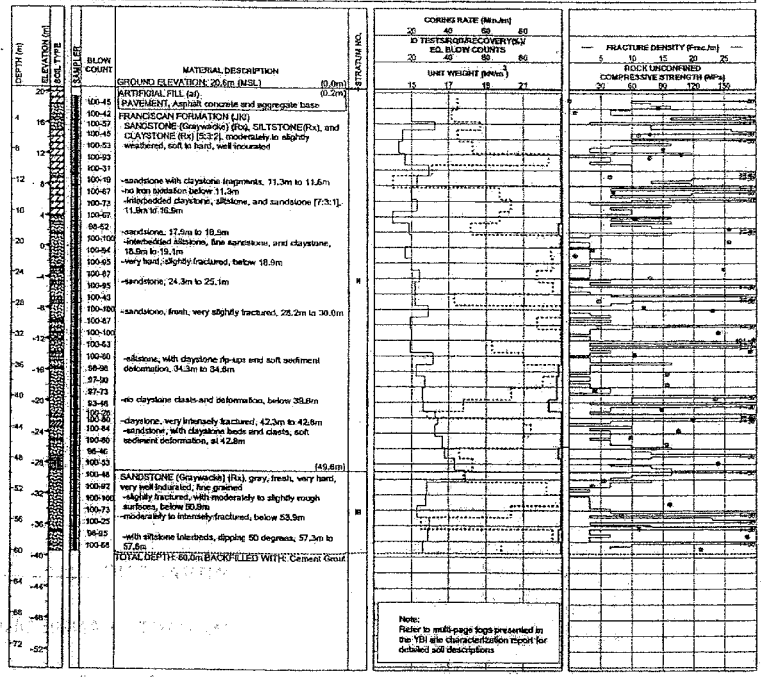

Note:
Refer to multi-page logs presented in the YBI site characterization report for detailed soil descriptions

BORING 99-158

COORDINATES: E1835235 N647471
CA State Plane Zone 3, NAD83, Meters
GROUND ELEVATION: 20.4m (MSL)
START DATE: 10/27/99

STATION: 1.5m left of E Sta. 55+61
COMPLETION ELEVATION: -46.5m (MSL)
END DATE: 11/3/99

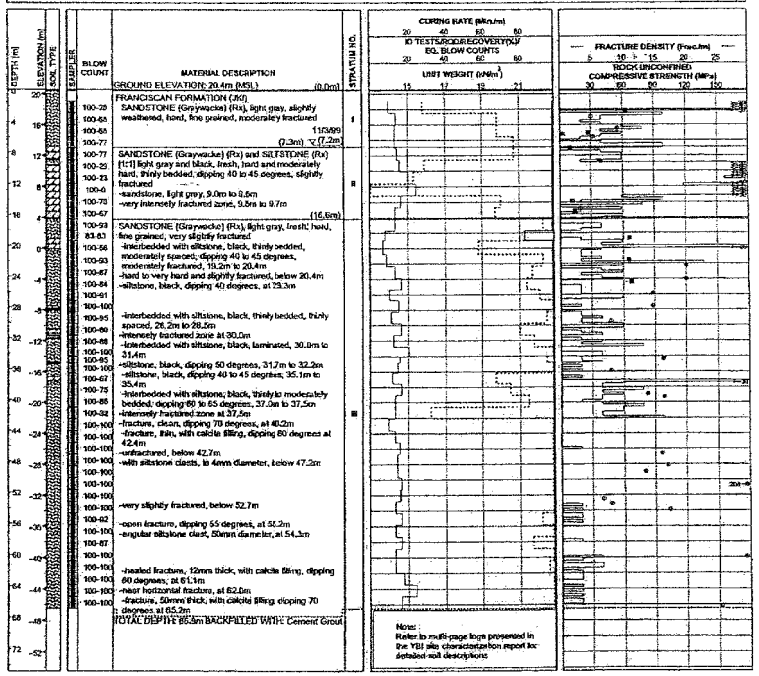

Note:
Refer to multi-page logs presented in the YBI site characterization report for detailed soil descriptions

ROBERT PRICE / SAIBA MOHAN — GEOTECHNICAL DESIGN OVERSIGHT	DRAWN BY	J.PALMER	B.SCHELL, S. SICILIANO — FIELD INVESTIGATION	PREPARED FOR THE STATE OF CALIFORNIA DEPARTMENT OF TRANSPORTATION	M. KAPUSKAR — PROJECT ENGINEER
	CHECKED BY	M. KAPUSKAR, S. SICILIANO	DATE SEE ABOVE		

ORIGINAL SCALE IN CENTIMETERS FOR REDUCED PLANS 0 1 2 3 4 5 6 7 8 9 10

CU 04251
EA 012051

BRIDGE NO.	SAN FRANCISCO OAKLAND BAY BRIDGE EAST SPAN SEISMIC SAFETY PROJECT
34-0006 L/R	YBI TRANSITION STRUCTURES
KM POST 12.6	LOG OF TEST BORINGS NO. 19
POST MILE	DISREGARD PRINTS BEARING EARLIER REVISION DATES → REVISION DATES (PRELIMINARY STAGE ONLY)
	SHEET 43 OF 65

CONTRACT NO. 04-012064
CONTRACT CHANGE ORDER NO. 73
SHEET 243 OF 256

SOIL AND ROCK TYPES

- Well graded GRAVEL (GW)
- Poorly graded GRAVEL (GP)
- GRAVEL with sand (GP or GW)
- GRAVEL with clay (GP or GW)
- Clayey GRAVEL (GC)
- GRAVEL with silt (GP or GW)
- Silty GRAVEL (GM)
- Well graded SAND (SW)
- Poorly graded SAND (SP)
- SAND with gravel (SP or SW)
- SAND with clay (SP-SC)
- Clayey SAND (SC)
- Silty SAND (SM)
- SAND with silt (SP-SM)
- Fat CLAY (CH)
- Sandy fat CLAY (CH)
- Lean CLAY (CL)
- Sandy lean CLAY (CL)
- Silty CLAY (CL-ML)
- Elastic SILT (MH)
- SILT (ML)
- Sandy SILT (ML)
- Clayey silt (ML-CL)
- Highly plastic ORGANICS (OH)
- Low plasticity ORGANICS (OL)
- SANDSTONE (Rs)
- SILTSTONE (Rs)
- CLAYSTONE (Rc)
- Interbedded Rock Strata (Rx)
- PAVEMENT

SAMPLERS

- 76mm-OD, 72mm-ID Thin Walled Tube
- 76mm-OD, 66mm-ID Modified California Liner
- 87mm-OD, 84mm-ID* Thin Walled Driven Tube
- 63.5mm-OD, 38mm-ID SPT, Split Spoon Sampler
- 63.5mm-OD, 34.9mm-ID Diffusion Liner
- Rock Core (Reed standard) (expressed recovery) (%)

* A variable-OD, 84-mm-ID tapered driven tube was used to sample coarse sand, gravel and rock

STANDARD PENETRATION TEST (SPT) AND MODIFIED CALIFORNIA (MC) LINER SAMPLERS

Samplers were driven with a 63.5 kg hammer dropped approximately 760 mm.

30	Number of blows to produce 30 cm of penetration after the initial 15 cm of seating.
50/10cm	Number of blows required to produce the indicated penetration after an initial 15 cm seating.
Refusal	50 blows produced the indicated penetration during the initial 15 cm interval.

Note: In rock coring lowest recovery(%)-RQD are shown in the Blow Count column.

TUBE AND OFFSHORE LINER SAMPLERS

WOH	Offshore Liner sample advanced with the weight of an 80 kg hammer.
PUSH or SAVE	Pushed thin-walled 76mm-OD tube.
15/60cm	Number of blows required to produce the indicated penetration using a 84mm-ID tube sampler. The sampler was driven with an 80 kg sledge hammer dropped approximately 1.5 m.

CLASSIFICATION TESTS BLOW COUNTS AND ROCK QUALITY

- n PERCENT PASSING #200 SIEVE
- w WATER CONTENT (%)
- D DRY WEIGHT (kN/m³)
- D THEORETICAL DRY WEIGHT (kN/m³)

PLASTIC LIMIT LIQUID LIMIT

- e EQUIVALENT SPT BLOW COUNT = (MC BLOWCOUNT/1.2) OR SPT BLOWCOUNT
- ROCK QUALITY DESIGNATION (RQD)
- ROCK RECOVERY PERCENT
- ROCK CORING RATE

STRENGTH TESTS

- POCKET PENETROMETER
- TORVANE
- REMOTE VANE
- MINATURE VANE @ RESIDUAL VANE)
- UNCONSOLIDATED UNDRAINED TRIAXIAL
- UNCONFINED FALL CONE
- UNCONFINED COMPRESSION (UCU)

Qu (Open symbols indicate tensile) test

Shear Strength Interpolated from CPT, Tip Resistance (qc = 12 kg)

- POINT LOAD TEST (ROCK-INTACT SPECIMEN)
- POINT LOAD TEST (ROCK ALONG WEAK PLANE)
- UNCONFINED COMPRESSION (ROCK)
- Bolt Strength Exceeds Capacity of Measuring Device

Rock: Sample broke along discontinuity; Intact sample would have greater strength

FRACTURE DENSITY (ROCK)

STRENGTH OF COHESIVE SOILS

Undrained Shear Strength

Consistency	kPa
Very Soft	less than 12
Soft	12 to 25
Firm	25 to 50
Stiff	50 to 100
Very Stiff	100 to 200
Hard	greater than 200

DENSITY OF GRANULAR SOILS

Descriptive Term	Relative Density (%)*
Very Loose	less than 15
Loose	15 to 35
Medium Dense	35 to 65
Dense	65 to 85
Very Dense	greater than 85

*Estimated from sampler driving record and CPT tip resistance.

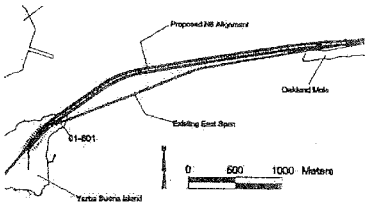

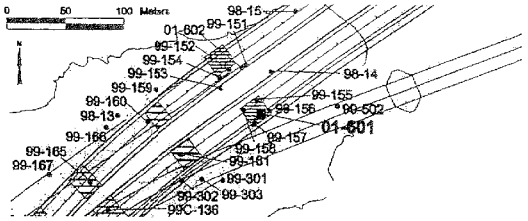

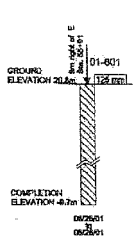

Metric

DIST	COUNTY	ROUTE	KILOMETER POST TOTAL PROJECT	SHEET NO.	TOTAL SHEETS
04	SF	80		100	137

REGISTERED GEOTECHNICAL PROFESSIONAL

PLANS APPROVAL DATE

REGISTERED PROFESSIONAL ENGINEER MIKE KAPUSKAR No. GE 2564 Exp. 12-31-06 GEOTECHNICAL STATE OF CALIFORNIA

FUGRO-EARTH MECHANICS, A JOINT VENTURE 7700, Edgewater Dr., Ste. 840, Oakland, CA 94621 (510) 562-8833, FAX (510) 562-8555

The State of California or its officers or agents shall not be responsible for the accuracy or completeness of electronic copies of this plan sheet.

BORING 01-601

COORDINATES: E1835249 N647468
CA State Plane Zone 3, NAD83, Meters
GROUND ELEVATION: 20.8m (MSL)
START DATE: 05/25/01

STATION: 8m right of E.Sta. 85+91
COMPLETION ELEVATION: -8.7m (MSL)
END DATE: 05/29/01

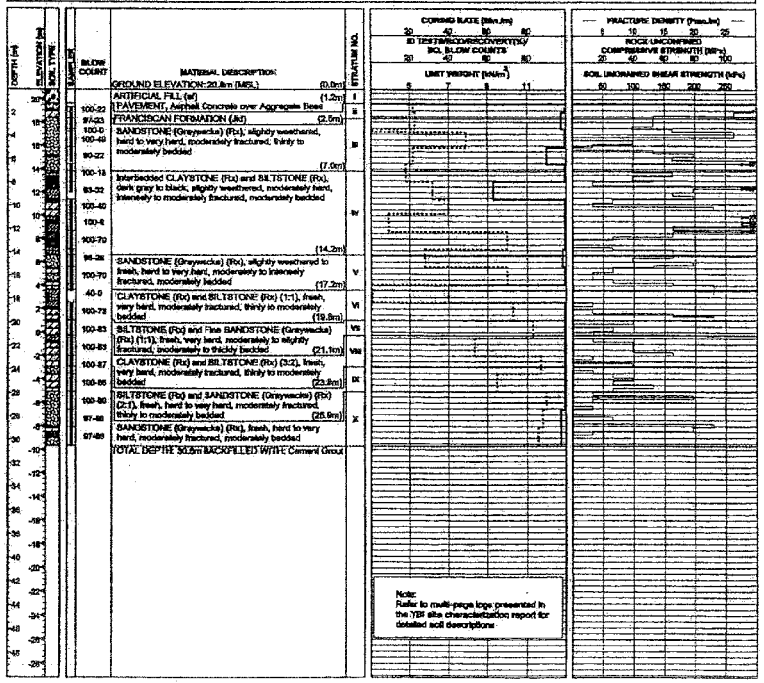

CONTRACT NO. 04A-0120/04A1

CONTRACT CHANGE ORDER NO. 73

SHEET 248 OF 259

ROBERT PRICE / SABA MOHAN	DRAWN BY	A. PALOMARES	B. SCHELL	PREPARED FOR THE STATE OF CALIFORNIA DEPARTMENT OF TRANSPORTATION	M. KAPUSKAR
GEOTECHNICAL DESIGN ENGINEER	CHECKED BY	S. SICILIANO	FIELD ENGINEER DATE SEE ABOVE		PROJECT ENGINEER

ORIGINAL SCALE IN CENTIMETERS FOR REDUCED PLANS 0 1 2 3 4 5 6 7 8 9 10

EA 012251

BRIDGE NO.	SAN FRANCISCO OAKLAND BAY BRIDGE EAST SPAN SEISMIC SAFETY PROJECT
34-0008 L/R	YBI TRANSITION STRUCTURES
KM POST 12.8	LOG OF TEST BORINGS NO. 20
POST MILE	

DISREGARD PRINTS BEARING EARLIER REVISION DATES

REVISION DATES (PRELIMINARY STAGE ONLY)						SHEET	OF
						44	85

SOIL AND ROCK TYPES

Well graded GRAVEL (GW); Poorly graded GRAVEL (GP); GRAVEL with sand (GP or GW); GRAVEL with clay (GP or GW); Clayey GRAVEL (GC); GRAVEL with silt (GP or GW); Silty GRAVEL (GM); Well graded SAND (SW); Poorly graded SAND (SP); SAND with gravel (SP or SW); SAND with clay (SP-SC); Clayey SAND (SC); Silty SAND (SM); SAND with silt (SP-SM); Fat CLAY (CH); Sandy fat CLAY (CH); Lean CLAY (CL); Sandy lean CLAY (CL); Silty CLAY (CL-ML); Elastic SILT (MH); SILT (ML); Sandy SILT (ML); Clayey silt (ML/CL); Highly plastic ORGANICS (OH); Low plasticity ORGANICS (OL); SANDSTONE (Rx); SILTSTONE (Rx); CLAYSTONE (Rx); Interbedded Rock Strata (Rx); PAVEMENT

SAMPLERS

STANDARD PENETRATION TEST (SPT) AND MODIFIED CALIFORNIA (MC) LINER SAMPLERS

TUBE AND OFFSHORE LINER SAMPLERS

CLASSIFICATION TESTS BLOW COUNTS AND ROCK QUALITY

STRENGTH TESTS

STRENGTH OF COHESIVE SOILS

DENSITY OF GRANULAR SOILS

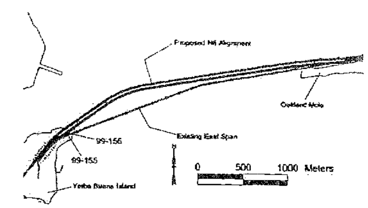

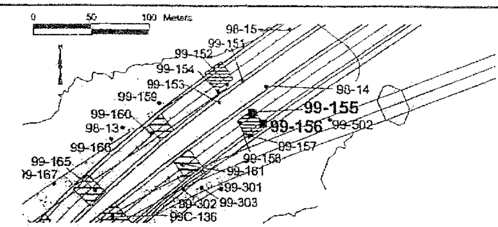

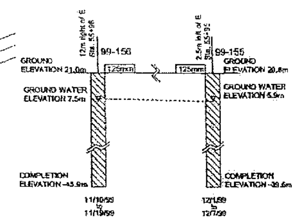

Metric

DIST	COUNTY	ROUTE	KILOMETER POST TOTAL PROJECT	SHEET NO.	TOTAL SHEETS
04	SF	80		101	137

REGISTERED CIVIL ENGINEER

PLANS APPROVAL DATE

REGISTERED PROFESSIONAL ENGINEER MIKE KAPUSKAR No. GE 2564 Exp. 12-31-06 GEOTECHNICAL STATE OF CALIFORNIA

FUGRO-EARTH MECHANICS, A JOINT VENTURE.
7700, Edgewater Dr., Ste. 848,
Oakland, CA 94621
(510) 562-8833, FAX (510) 562-8858

The State of California or its officers or agents shall not be responsible for the accuracy or completeness of electronic copies of this plan sheet.

BORING 99-156

COORDINATES: E1835257 N647470
CA State Plane Zone 3, NAD83, Meters
GROUND ELEVATION: 21.0m (MSL)
START DATE: 11/10/99

STATION: 12m right of E Sta. 55+98
COMPLETION ELEVATION: -45.9m (MSL)
END DATE: 11/19/99

DEPTH (m) | ELEVATION (m) | SOIL TYPE | SAMPLER | BLOW COUNT | MATERIAL DESCRIPTION | STRATUM NO.

GROUND ELEVATION: 21.0m (MSL) (0.0m)
ARTIFICIAL FILL (Qaf)
ASPHALT, 75mm thick with 75mm aggregate base (0.2m)
FRANCISCAN FORMATION (JKf)
SANDSTONE (Graywacke) (Rx), CLAYSTONE (Rx) [3:1] slightly weathered, hard to very hard, intensely fractured, fine grained
-intensely fractured zone, 70% healed, to 4.7m 11/10/99 ▽ (13.5m)
-oriented siltstone clasts dipping 30 degrees at 16.5m
-intensely fractured zone at 18.0m (19.5m)
CLAYSTONE (Rx), SILTSTONE (Rx) and SANDSTONE (Graywacke) (Rx) [5:4:2], fresh, hard to very hard, slightly fractured
-intensely fractured zone at 21.6m
-siltstone, 25.8m to 26.5m
-bedding dipping 30 degrees at 26.5m (27.3m)
SANDSTONE (Graywacke) (Rx), light gray, fresh, hard, massive, moderately to slightly fractured
-siltstone, with fractures dipping 15 to 20 degrees, 30.5m to 30.9m
-siltstone, 32.5m to 32.8m
-interbedded siltstone and sandstone, 32.8m to 34.7m
-near-vertical, healed fracture, 38.6 to 39.0m
-intensely fractured zone, at 41.7m
-very hard, very slightly fractured to unfractured, below 42.5m
-siltstone, contact dipping 40 degrees, 45.3m to 45.6m
-siltstone, 47.5m to 47.8m
-healed fracture, 25mm thick, with calcite filling, at 47.9m
-with siltstone laminations; dipping 30 degrees, at 49.8m
-fracture, dipping 20 degrees, at 55.0m
-intensely fractured zone, along fracture dipping 60 degrees, at 57.2m
-siltstone, dipping 40 degrees; at 60.7m
-fracture, 3mm thick, with light green calcite filling, dipping 45 degrees, at 65.1m
TOTAL DEPTH: 66.8m BACKFILLED WITH: Cement Grout

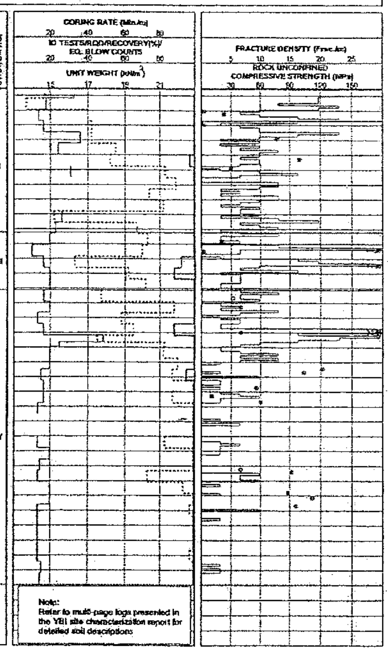

Note: Refer to multi-page logs presented in the YBI site characterization report for detailed soil descriptions

BORING 99-155

COORDINATES: E1835246 N647479
CA State Plane Zone 3, NAD83, Meters
GROUND ELEVATION: 20.8m (MSL)
START DATE: 12/1/99

STATION: 2.5m left of E Sta. 55+95
COMPLETION ELEVATION: -39.6m (MSL)
END DATE: 12/7/99

GROUND ELEVATION: 20.8m (MSL) (0.0m)
FRANCISCAN FORMATION (JKf)
SANDSTONE (Graywacke) (Rx) and SILTSTONE(Rx)
-light gray sandstone laminated with black siltstone, moderately weathered, moderately hard, moderately indurated, intensely fractured, fine to medium-grained (4.4m)
SANDSTONE (Graywacke) (Rx), light gray, moderately weathered, moderately hard to hard, well indurated, moderately fractured, fine to medium grained
-healed fracture zone, 14.3m to 14.8m 12/14/99 ▽ (14.9m)
-siltstone, 14.8m to 14.8m
-siltstone, very intensely fractured, moderately soft, dipping 40 degrees, 17.5m to 18.0m
-intensely fractured zone at 20.4m (21.2m)
SANDSTONE (Graywacke) (Rx) and SILTSTONE(Rx)
-light grey and black, fresh, moderately hard to hard
-siltstone, dipping 60 to 80 degrees, 23.9m to 24.4m
-bedding plane fractures, dipping 40 degrees; 24.4m to 27.0m (28.5m)
SANDSTONE (Graywacke) (Rx), light gray, fresh, hard to very hard, well indurated, slightly fractured; fine to medium grained
-fractures with very thin to moderately thin calcite fillings, slightly rough, dipping 40 to 60 degrees
-with 0.125mm to 1.0mm sand sized siltstone clasts, below 28.5m
-silty sandstone layer with siltstone dipping at 45 degrees, 30.1m to 30.5m
-siltstone, very intensely fractured, at 34.7m
-interbedded siltstone and sandstone 35.4m to 35.8m
-very thin to closed healed fractures, dipping 50 degrees to sub-vertical, 35.8m to 37.6m
-siltstone, intensely fractured, moderately hard to moderately soft, 38.3m to 38.5m
-healed fracture zone, intensely fractured, with light green mineralized calcite fillings; at 42.0m
-interbedded sandstone, siltstone, and silty sandstone, 43.1m to 45.1m
-siltstone, intensely fractured, moderately hard, 43.1m to 43.4m
-very intensely fractured and distorted, mottled with calcite and siltstone, 46.1m to 46.6m
TOTAL DEPTH: 60.4m BACKFILLED WITH: Cement Grout

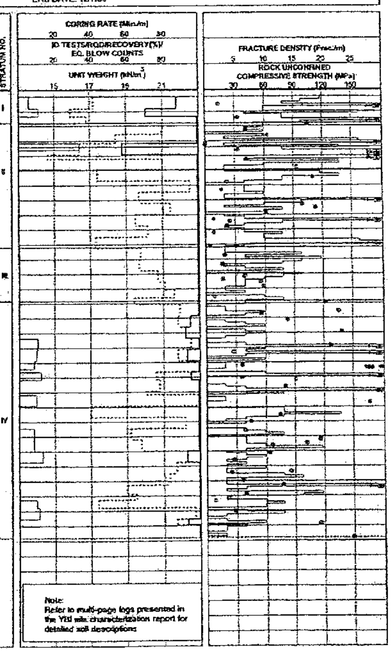

Note: Refer to multi-page logs presented in the YBI site characterization report for detailed soil descriptions

ROBERT PRICE / SABA MOHAN — GEOTECHNICAL DESIGN OVERSIGHT
DRAWN BY C.CACERES
CHECKED BY M. KAPUSKAR
B. SCHELL, S. SICILIANO, E. CHASE — FIELD INVESTIGATION — DATE SEE ABOVE

PREPARED FOR THE
STATE OF CALIFORNIA
DEPARTMENT OF TRANSPORTATION

M. KAPUSKAR — PROJECT ENGINEER

BRIDGE NO. 34-0006 L/R
KM POST 12.8
POST MILE

SAN FRANCISCO OAKLAND BAY BRIDGE
EAST SPAN SEISMIC SAFETY PROJECT

YBI EB TRANSITION STRUCTURES

LOG OF TEST BORINGS NO. 21

ORIGINAL SCALE IN CENTIMETERS FOR REDUCED PLANS 0 1 2 3 4 5 6 7 8 9 10

CU 04251
EA 012051

DISREGARD PRINTS BEARING EARLIER REVISION DATES →
REVISION DATES (PRELIMINARY STAGE ONLY)
SHEET 45 OF 65

CONTRACT NO. 04-012024
CONTRACT CHANGE ORDER NO 73
SHEET 243 OF 280

As-built Log of Test Borings sheet is considered an information document only. As such, the State of California registration seal with signature, license number, and registration certificate expiration date will not be required. This drawing is available and presented only for the convenience of any bidder, contractor, or other interested party.

DIST	COUNTY	ROUTE	KILOMETER POST- TOTAL PROJECT	Sheet No.	Total sheets
04	SF ▲	80		46 ▲	65 ▲

YBI TRANSITION STRUCTURES

AS-BUILT LOG OF TEST BORINGS NO. 1

The State of California or its officers or agents shall not be responsible for the accuracy and completeness of electronic copies of this plan sheet.

CU: 04251 ▲
EA: 01205I ▲

BRIDGE NO. 34-0006 L/R

DIST	COUNTY	ROUTE	POST MILES TOTAL PROJECT	SHEET NO	TOTAL SHEETS
04	SF	80		102	137

REGISTERED ENGINEERING GEOLOGIST

PLANS APPROVAL DATE

REGISTERED GEOLOGIST — CERTIFIED ENGINEERING GEOLOGIST — STATE OF CALIFORNIA

LEGEND OF BORING OPERATIONS

WEATHERING DESCRIPTORS

[illegible]

PLAN
1" = 50'

ROCK HARDNESS/ STRENGTH DESCRIPTORS

Alphanumeric descriptor	Descriptor	Criteria
H1	Extremely hard	Core, fragment, or exposure cannot be scratched with knife or sharp pick, can only be chipped with repeated heavy hammer blows.
H2	Very hard	Cannot be scratched with knife or sharp pick. Core of fragment breaks with repeated heavy hammer blows.
H3	Hard	Can be scratched with knife or sharp pick with difficulty (heavy pressure). Heavy hammer blow required to break specimen.
H4	Moderately hard	Can be scratched with knife or sharp pick with light or moderate pressure. Core or fragment breaks with moderate hammer blow.
H5	Moderately soft	Can be grooved 1/16 inch (2 mm) deep by knife or sharp pick with moderate or heavy pressure. Core or fragment breaks with light hammer blow or heavy manual pressure.
H6	Soft	Can be grooved or gouged easily by knife or sharp pick with light pressure, can be scratched with fingernail. Breaks with light to moderate manual pressure.
H7	Very soft	Can be readily indented, grooved or gouged with fingernail, or carved with a knife. Breaks with light manual pressure.

Any bedrock unit softer than H7, very soft, is to be described using USBR 5000 consistency descriptors.

Note: Although "sharp pick" is included in these definitions, descriptions of ability to be scratched, grooved or gouged by a knife is the preferred criteria.

BEDDING, FOLIATION, OR FLOW TEXTURE DESCRIPTORS

Descriptors	Thickness / Spacing
Massive	Greater than 10 ft (3 m)
Very thickly (bedded, foliated, or banded)	3 to 10 ft (1 to 3 m)
Thickly	1 to 3 ft (300 mm to 1 m)
Moderately	0.3 to 1 ft (100 to 300 mm)
Thinly	0.1 to 0.3 ft (30 to 100 mm)
Very thinly	0.03 (3/8 in) to 0.1 ft (10 to 30 mm)
Laminated (intensely foliated or banded)	Less than 0.03 ft (3/8 in) (<10 mm)

FRACTURE DENSITY

FRACTURE DENSITY - Based on the spacing of all natural fractures in an exposure or core recovery lengths in boreholes; excluded mechanical breaks, shears, and shear zones; however, shear-distributed zones (fracturing beside the shear) are included. Descriptors for fracture density apply to all rock exposures such as tunnel walls, dozer trenches, outcrops, or foundation cut slopes and inverts, as well as boreholes. Descriptive criteria presented below are based on borehole cores where lengths are measured along the core axis, for other exposures the criteria is distance measured between fractures (size of blocks).

UNFRACTURED (FD0): No fractures.

VERY SLIGHTLY FRACTURED (FD1): Core recovered mostly in lengths greater than 3 feet (1 m)

SLIGHTLY TO VERY SLIGHTLY FRACTURED (FD2)*

SLIGHTLY FRACTURED (FD3): Core recovered mostly in lengths from 1 to 3 feet (300 to 1000 mm) with few scattered lengths less than 1 foot (300 mm) or greater than 3 feet (1000 mm)

MODERATELY TO SLIGHTLY FRACTURED (FD4)*

MODERATELY FRACTURED (FD5): Core recovered mostly in 0.3 to 1.0 foot (100 to 300 mm) lengths with most lengths about 0.6 foot (200 mm)

INTENSELY TO MODERATELY FRACTURED (FD6)*

INTENSELY FRACTURED (FD7): Lengths average from 0.1 to 0.3 foot (30 to 100 mm) with scattered fragmented intervals. Core recovered mostly in lengths less than 0.3 foot (100 mm).

VERY INTENSELY TO INTENSELY FRACTURED (FD8)*

VERY INTENSELY FRACTURED (FD9): Core recovered mostly as chips and fragments with a few scattered short-core lengths.

* Combinations of fracture densities (e.g. Very Intensely to Intensely Fractured or Moderately to Slightly Fractured) are used where equal distribution of both fracture density characteristics are present over a significant interval or exposure, or where characteristics are "in between" the descriptor definitions.

RQD LOGGING

After Deere & Deere, 1989

NOTES

1. All elevations shown refer to Mean Lower Low Water (M.L.L.W.) Datum = 0.0. To convert M.L.L.W. elevations to Mean Sea Level (M.S.L.) Datum of 1929, add 3.1 feet.

2. All Standard Penetration Tests for boring 95-1 were performed using N-size rod.

3. Rock Quality Designation, Weathering, Hardness, Fracture Density and Bedding Thickness descriptors, as shown on this plate, were used to describe all rock core from borings drilled in 1995. Descriptors were determined in the field in accordance with the United States Department of the Interior, Bureau of Reclamation, Engineering Geology, Field Manual.

4. Rock Quality Designation (RQD) was logged using Bx size core diameter @ Boring 95-1. Both recovery and RQD may be slightly lower than on NX or HQ size core diameter.

5. Shear wave velocity data and reports for boring 95-1 are available for review through the Engineering Service Center, Office of Structural Foundations, Geotechnical Support Branch, at the Transportation Laboratory, 5900 Folsom Blvd., Sacramento, CA 95819.

6. Laboratory test data from boring 95-1 are available for review through the Engineering Service Center, Office of Structural Foundations, Geotechnical Support Branch, at the Transportation Laboratory, 5900 Folsom Blvd., Sacramento, CA 95819.

7. Dilatometer (DT) data for tests performed at boring 95-1 are available for review through the Engineering Service Center, Office of Structural Foundations, Structure Foundations Branch, at the Transportation Laboratory, 5900 Folsom Blvd., Sacramento, CA 95819.

8. CPT data for tests performed at borings 95-2, 95-3, 95-4, 95-5, 95-6, 95-7, 95-8, 95-9, and 95-10 are available for review through the Engineering Service Center, Office of Structural Foundations, Structure Foundations Branch, at the Transportation Laboratory, 5900 Folsom Blvd., Sacramento, CA 95819.

9. Soil description/modifiers: Trace = <5%
Some = 5-12%
With = >12%

10. Although no ground water measurements are shown in the Caltrans test borings, the proximity to the Pacific Ocean and the San Francisco Bay should imply that free ground water may be anticipated at or near sea level or about elevation "0". Additionally this ground water is probably subject to tidal variance.

CONSISTENCY CLASSIFICATION FOR SOILS

According to the Standard Penetration Test

Penetration Index (Blows/Ft)	Granular	Cohesive
0-4	Very Loose	Very Soft
5-9	Loose	Soft
10-19	Slightly compact	Stiff
20-34	Compact	Very Stiff
35-69	Dense	Hard
+70	Very Dense	Very Hard

LEGEND OF EARTH MATERIALS

NOTE: Classification of earth material as shown on this sheet is based upon field inspection and is not to be construed to imply mechanical analysis

ENGINEERING SERVICE CENTER	STRUCTURE FOUNDATIONS	FIELD INVESTIGATION BY:	State of CALIFORNIA DEPARTMENT OF TRANSPORTATION	DIVISION OF STRUCTURES STRUCTURE DESIGN	BRIDGE NO. 34-0004 POST MILE 7.5/8.0	SAN FRANCISCO-OAKLAND BAY BRIDGE-EAST VIADUCT EARTHQUAKE RETROFIT PROJECT NO. 19 LOG OF TEST BORINGS 1 OF 13
DRAWN BY	Irma Gamarro 0/95	M. LUQMAN		CU: 04 EA: 043471		
CHECKED BY						

ORIGINAL SCALE IN INCHES FOR REDUCED PLANS

DISREGARD PRINTS BEARING EARLIER REVISION DATES

REVISION DATES (PRELIMINARY STAGE ONLY) SHEET OF

CONTRACT NO. 04-0120R4

CONTRACT CHANGE ORDER NO 73

SHEET 246 OF 286

CONTRACT NO. 04-012024

CONTRACT CHANGE ORDER NO. 73

SHEET 297 OF 302

DIST	COUNTY	ROUTE	POST MILES TOTAL PROJECT	SHEET NO.	TOTAL SHEETS
04	SF	80		103	137

R. W. FOX — No. — Exp. 6-31-97 — REGISTERED GEOLOGIST — CERTIFIED ENGINEERING GEOLOGIST — STATE OF CALIFORNIA

PLANS APPROVAL DATE

THE STATE OF CALIFORNIA OR ITS OFFICERS OR AGENTS SHALL NOT BE RESPONSIBLE FOR THE ACCURACY OR COMPLETENESS OF ELECTRONIC COPIES OF THIS PLAN SHEET.

As-built Log of Test Borings sheet is considered an information document only.
As such, the State of California registration seal with signature, license number, and registration certificate expiration date will not be required.
This drawing is available and presented only for the convenience of any bidder, contractor, or other interested party.

DIST	COUNTY	ROUTE	KILOMETER POST- TOTAL PROJECT	Sheet No.	Total sheets
04	SF ▲	80		47 ▲	65 ▲

YBI TRANSITION STRUCTURES

AS-BUILT LOG OF TEST BORINGS NO. 2

The State of California or its officers or agents shall not be responsible for the accuracy and completeness of electronic copies of this plan sheet.

CU: 04251 ▲ EA: 012051 ▲

BRIDGE NO. 34-0006 L/R

FOR PLAN VIEW SEE "LOG OF TEST BORINGS 1 OF 13"

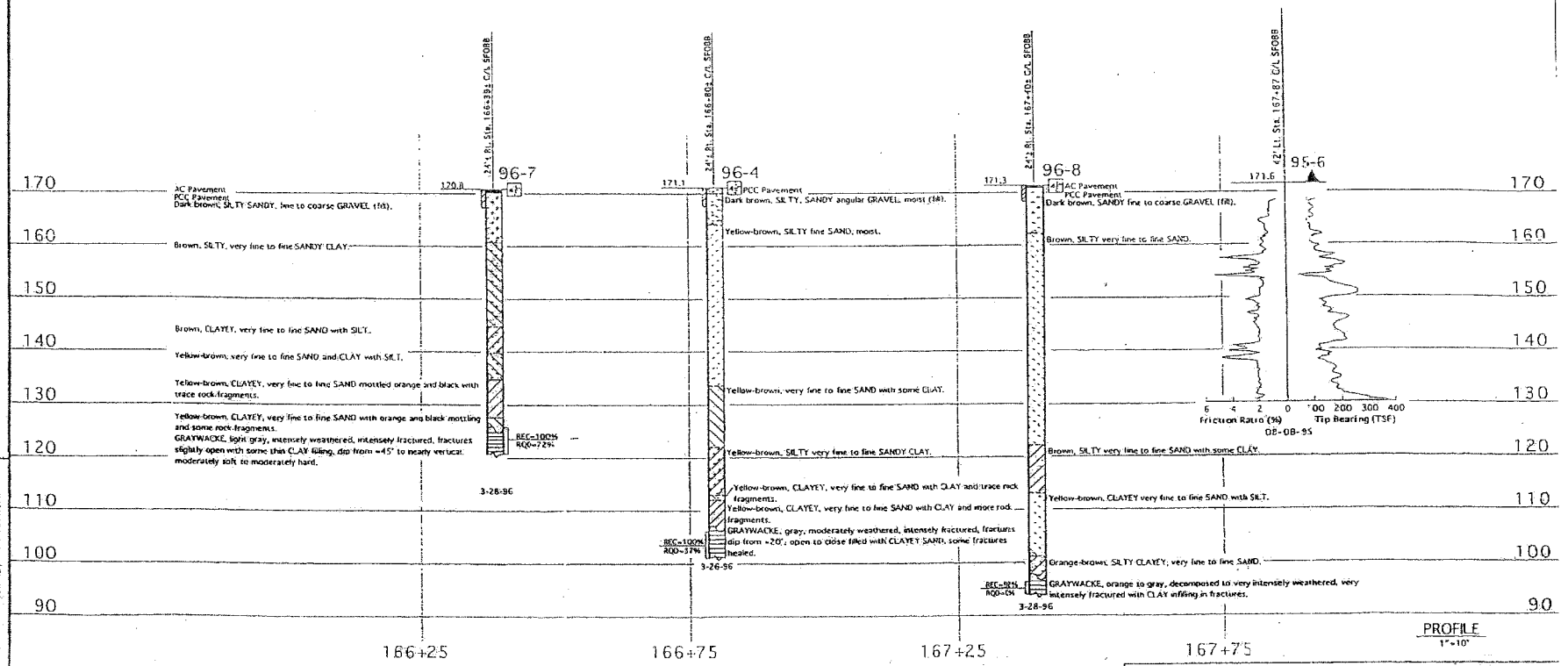

PROFILE
1"=10'

LEGEND OF EARTH MATERIALS

CLASSIFICATION BASED ON THE UNIFIED SOIL CLASSIFICATION SYSTEM

According to the Standard Penetration Test

Designation (Blows / Ft)	Granular	Cohesive
0-4	Very Loose	Very Soft
5-9	Loose	Soft
10-29	Medium Dense	Medium Stiff
30-49	Dense	Stiff
50 +	Very Dense	Very Hard

NOTE: Classification of soils presented as shown on the plans is based upon field observation and is to be considered a preliminary classification only. Additional laboratory tests may be required.

ENGINEERING SERVICE CENTER	STRUCTURE FOUNDATIONS	FIELD INVESTIGATION BY:	State of CALIFORNIA DEPARTMENT OF TRANSPORTATION	DIVISION OF STRUCTURES STRUCTURE DESIGN	BRIDGE NO. 34-0004	SAN FRANCISCO-OAKLAND BAY BRIDGE-EAST VIADUCT EARTHQUAKE RETROFIT PROJECT NO. 19
DRAWN BY	4-96	T. CROSBY			POST MILE 7.6/8.0	LOG OF TEST BORINGS 2 OF 13
CHECKED BY				CU: 04 EA: 043471	DISREGARD PRINTS BEARING EARLIER REVISION DATES	REVISION DATES (PRELIMINARY STAGE ONLY) — SHEET OF

ORIGINAL SCALE IN INCHES FOR REDUCED PLANS 0 1 2 3

CONTRACT NO. 04-042004

CONTRACT CHANGE ORDER NO. 32

DIST	COUNTY	ROUTE	POST MILES TOTAL PROJECT	SHEET NO	TOTAL SHEETS
04	SF	80		104	137

R. W. FOX, No. 78, Exp. 8-31-97, CERTIFIED ENGINEERING GEOLOGIST, STATE OF CALIFORNIA

PLANS APPROVAL DATE

THE STATE OF CALIFORNIA OR ITS OFFICERS OR AGENTS SHALL NOT BE RESPONSIBLE FOR THE ACCURACY OR COMPLETENESS OF ELECTRONIC COPIES OF THIS PLAN SHEET.

As-built Log of Test Borings sheet is considered an information document only. As-such, the State of California registration seal with signature, license number, and registration certificate expiration date will not be required. This drawing is available and presented only for the convenience of any bidder, contractor, or other interested party.

DIST	COUNTY	ROUTE	KILOMETER POST-TOTAL PROJECT	Sheet No.	Total Sheets
04	SF	80		48	65

YBI TRANSITION STRUCTURES

AS-BUILT LOG OF TEST BORINGS NO. 3

The State of California or its officers or agents shall not be responsible for the accuracy and completeness of electronic copies of this plan sheet.

CU: 04251 EA: 012081

BRIDGE NO. 34-0006 U/R

FOR PLAN VIEW SEE "LOG OF TEST BORINGS 1 OF 13"

SHEET 246 OF 392

LEGEND OF BORING OPERATIONS

CONSISTENCY CLASSIFICATION CHART

ASSEMBLING OF THE STANDARD PENETRATION TEST

Penetration Index (Blows/Ft)	Granular	Cohesive
0-4	Very Loose	Very Soft
5-10	Loose	Soft
11-30	Medium Compact	Very Stiff
31-50	Dense	Hard
>50	Very Dense	Very Hard

NOTES: Correlation of penetration resistance with the relative density and consistency of soil is based upon field inspection and is not to be interpreted as a precise measure of in-situ soil properties.

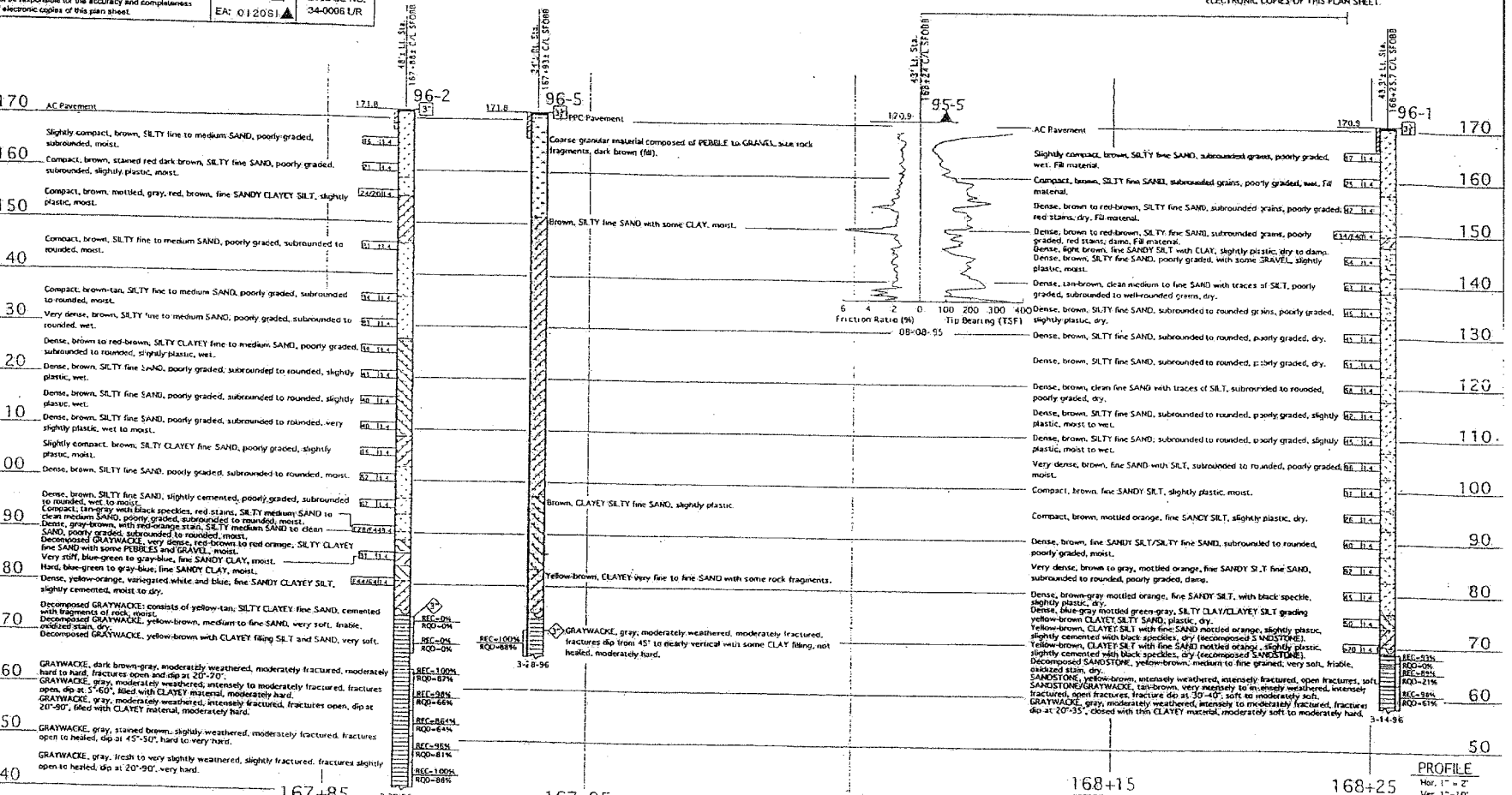

ENGINEERING SERVICE CENTER	STRUCTURE FOUNDATIONS	FIELD INVESTIGATION BY:	State of CALIFORNIA DEPARTMENT OF TRANSPORTATION	DIVISION OF STRUCTURES STRUCTURE DESIGN	BRIDGE NO. 34-0004
DRAWN BY	4-96	M. LUQMAN & J. TA			POST MILE 7.67/8.0
CHECKED BY					

SAN FRANCISCO-OAKLAND BAY BRIDGE-EAST VIADUCT

EARTHQUAKE RETROFIT PROJECT NO. 19

LOG OF TEST BORINGS 3 OF 13

ORIGINAL SCALE IN INCHES FOR REDUCED PLANS — 0 1

CU: 04 EA: 043471

DISREGARD PRINTS BEARING EARLIER REVISION DATES

REVISION DATES (PRELIMINARY STAGE ONLY)

SHEET OF

As-built Log of Test Borings sheet is considered an information document only.
As such, the State of California registration seal with signature, license number, and registration certificate expiration date will not be required.
This drawing is available and presented only for the convenience of any bidder, contractor, or other interested party.

DIST	COUNTY	ROUTE	KILOMETER POST- TOTAL PROJECT	Sheet No.	Total sheets
04	SF ▲	80		49 ▲	65 ▲

YBI TRANSITION STRUCTURES

AS-BUILT LOG OF TEST BORINGS NO. 4

The State of California or its officers or agents shall not be responsible for the accuracy and completeness of electronic copies of this plan sheet.

CU: 04251 ▲
EA: 012051 ▲

BRIDGE NO. 34-0006 L/R

FOR PLAN VIEW SEE "LOG OF TEST BORINGS 1 OF 13"

DIST	COUNTY	ROUTE	POST MILES TOTAL PROJECT	SHEET NO.	TOTAL SHEETS
04	SF	80		105	137

PLANS APPROVAL DATE

REGISTERED GEOLOGIST — CERTIFIED ENGINEERING GEOLOGIST — STATE OF CALIFORNIA

THE STATE OF CALIFORNIA OR ITS OFFICERS OR AGENTS SHALL NOT BE RESPONSIBLE FOR THE ACCURACY OR COMPLETENESS OF ELECTRONIC COPIES OF THIS PLAN SHEET.

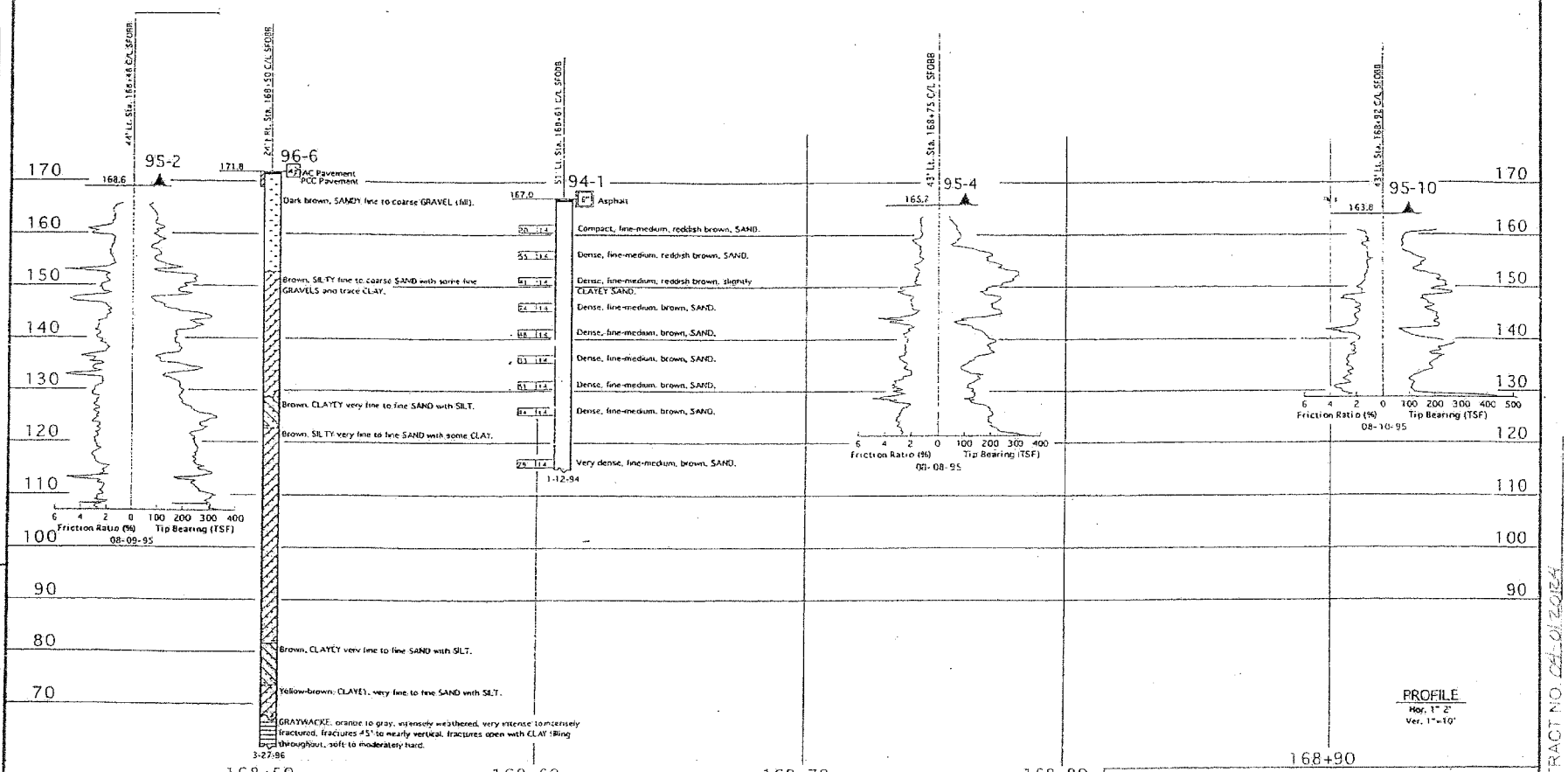

PROFILE
Hor. 1" = 2'
Ver. 1" = 10'

ENGINEERING SERVICE CENTER	STRUCTURE FOUNDATIONS	FIELD INVESTIGATION BY:	State of CALIFORNIA DEPARTMENT OF TRANSPORTATION	DIVISION OF STRUCTURES STRUCTURE DESIGN	BRIDGE NO. 34-0004	SAN FRANCISCO-OAKLAND BAY BRIDGE-EAST VIADUCT EARTHQUAKE RETROFIT PROJECT NO. 19
DRAWN BY	4-96	T. CROSBY			POST MILE 7.6/8.0	LOG OF TEST BORINGS 4 OF 13
CHECKED BY						

ORIGINAL SCALE IN INCHES FOR REDUCED PLANS — 0 1 2 3

CU: 04
EA: 043471

DISREGARD PRINTS BEARING EARLIER REVISION DATES

REVISION DATES (PRELIMINARY STAGE ONLY)

SHEET IN

CONTRACT CHANGE ORDER NO. 23
04/01/2014
SHEET 2-1 OF 2-30

CONTRACT NO. 04-012081

CONTRACT CHANGE ORDER NO. 73

SHEET 250 OF 290

FOR PLAN VIEW SEE "LOG OF TEST BORINGS 1 OF 13"

DIST	COUNTY	ROUTE	POST MILES TOTAL PROJECT	SHEET NO.	TOTAL SHEETS
04	SF	80		106	137

REGISTERED GEOLOGIST R.W. FOX 8-31-97 CERTIFIED ENGINEERING GEOLOGIST STATE OF CALIFORNIA

PLANS APPROVAL DATE

THE STATE OF CALIFORNIA OR ITS OFFICERS OR AGENTS SHALL NOT BE RESPONSIBLE FOR THE ACCURACY OR COMPLETENESS OF ELECTRONIC COPIES OF THIS PLAN SHEET.

As-built Log of Test Borings sheet is considered an information document only. As such, the State of California registration seal with signature, license number, and registration certificate expiration date will not be required. This drawing is available and presented only for the convenience of any bidder, contractor, or other interested party.

DIST	COUNTY	ROUTE	KILOMETER POST- TOTAL PROJECT	Sheet No.	Total sheets
04	SF	80		59	66

YBI TRANSITION STRUCTURES

AS-BUILT LOG OF TEST BORINGS NO. 5

The State of California or its officers or agents shall not be responsible for the accuracy and completeness of electronic copies of this plan sheet.

CU: 04281
EA: 012081

BRIDGE NO. 34-0006 D/R

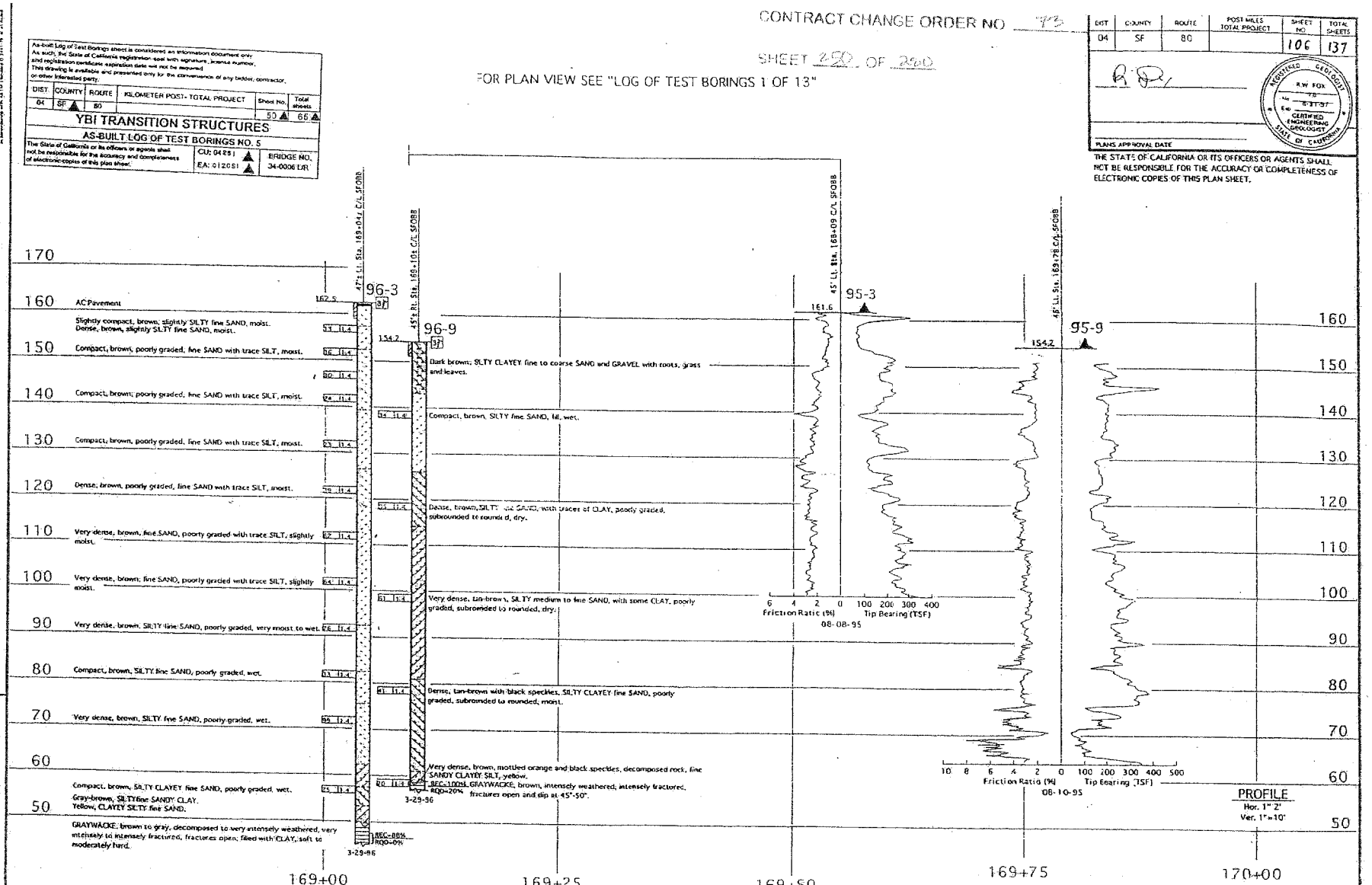

LEGEND OF EARTH MATERIALS

CONSISTENCY CLASSIFICATION CRITERIA According to the Standard Penetration Test

Penetration Index (Blows / Ft)	Density	Consistency
0-4	Very Loose	Very Soft
5-10	Loose	Soft
11-30	Medium Dense	Medium Stiff
31-50	Dense	Stiff
51-80	Very Dense	Very Stiff
81+	Very Dense	Hard

NOTE: Classification of earth materials is shown on this sheet is based upon field observations and laboratory tests and may be reviewed by those investigations.

ENGINEERING SERVICE CENTER	STRUCTURE FOUNDATIONS	FIELD INVESTIGATION BY:	State of CALIFORNIA DEPARTMENT OF TRANSPORTATION	DIVISION OF STRUCTURES STRUCTURE DESIGN	BRIDGE NO. 34-0006	SAN FRANCISCO-OAKLAND BAY BRIDGE-EAST VIADUCT
DRAWN BY: JOHN CHAN 4-96		T. CROSBY			POST MILE 7.6/8.0	EARTHQUAKE RETROFIT PROJECT NO. 19
CHECKED BY						LOG OF TEST BORINGS 5 OF 13

ORIGINAL SCALE IN INCHES FOR REDUCED PLANS 0 1 2 3 4

CU: 04
EA: 043471

DISREGARD PRINTS BEARING EARLIER REVISION DATES

REVISION DATES (PRELIMINARY STAGE ONLY)

SHEET OF

Penetration Index (Blows / Ft)	Granular	Cohesive
0-4	Very Loose	Very Soft
5-9	Loose	Soft
10-19	Slightly compact	Stiff
20-34	Compact	Very Stiff
35-69	Dense	Hard
+70	Very Dense	Very Hard

According to the Standard Penetration Test

NOTE: Classification of earth material as shown on this sheet is based upon field inspection and is not to be construed to imply mechanical analysis.

LEGEND OF BORING OPERATIONS

FOR PLAN VIEW, SEE "LOG OF TEST BORINGS", SHEET 1 OF 13.

YBI TRANSITION STRUCTURES
AS-BUILT LOG OF TEST BORINGS NO. 6

DIST	COUNTY	ROUTE	KILOMETER POST-TOTAL PROJECT	Sheet No.	Total sheets
04	SF	80		51	65

CU: 04251 — EA: 01205I — BRIDGE NO. 34-0006 L/R

95-8
46' Lt. Sta. 169+95 C/L SFOBB — 153.1

Friction Ratio (%) — Tip Bearing (TSF) — 8-09-95

95-1
54' Lt. Sta. 170+10 C/L SFOBB — 152.3

- AC and GRAVEL
- Brown, SILTY fine SAND.
- Brown, SILTY fine SAND, dry
- 18 — Loose, tan-brown, SILTY fine SAND, subrounded to well rounded, poorly graded, dry.
- 25 — Compact, tan-brown, SILTY fine SAND, subrounded to rounded, poorly graded, dry to moist.
- 36 — Dense, tan-brown, SILTY fine SAND, subrounded, poorly graded, dry.
- 21 — Compact, tan-brown, SILTY fine SAND, subrounded to well rounded, poorly graded, dry.
- 25 — Compact, tan-brown, SILTY fine SAND, subrounded to rounded, poorly graded, slightly cohesive, moist.
- 23 — Compact, tan-brown, SILTY fine SAND, subrounded to rounded, poorly graded, slightly cohesive, well sorted, moist.
- 29 — Compact, brown, SILTY fine SAND, subrounded to rounded, poorly graded, slightly cohesive, moist-dry.
- 20 — Compact, brown, SILTY fine SAND, subrounded to rounded, poorly graded, slightly cohesive, moist-dry.
- 40 — Dense, tan-brown, SILTY fine SAND, subrounded to rounded, poorly graded, slightly cohesive, dry.
- 29 — Compact, brown, SILTY fine SAND, subrounded to rounded, poorly graded, slightly cohesive, dry to moist.
- 24 — Compact, brown, SILTY fine SAND, subrounded to rounded, poorly graded, slightly cohesive, dry to moist.
- 32 — Compact, brown, SILTY fine SAND, subrounded to rounded, poorly graded, slightly cohesive, dry to moist.
- 33 — Compact, brown, SILTY fine SAND, subrounded to rounded, poorly graded, slightly cohesive, dry to moist.
- 44 — Dense, brown, fine SANDY SILT, SILTY fine SAND, rounded to well rounded grains, poorly graded, slightly cohesive, dry to moist.
- 28 — Compact, gray-brown, mottled red-brown, fine SANDY SILT/SILTY fine SAND, slightly cohesive, moist.
- 28 — Compact, gray-brown, fine SANDY SILT/SILTY fine SAND, slightly cohesive, moist.
- 28 — Compact, brown, mottled gray, fine SANDY SILT, rounded to subrounded grains, poorly graded, moist.
- 32 — Compact, brown, SILTY fine SAND/fine SANDY SILT, slightly cohesive, moist.
- 38 — Dense, brown, SILTY fine SAND, rounded to subrounded grains, poorly graded, slightly cohesive, moist.
- 45 — Dense, dark brown, SILTY fine SAND, rounded to subrounded grains, poorly graded, slightly cohesive, moist.
- 43 — Dense, dark brown, SILTY fine SAND, rounded to subrounded grains, poorly graded, slightly cohesive, moist.
- 61 — Dense, dark brown, SILTY fine SAND, rounded to well rounded grains, poorly graded, slightly cohesive, moist.
- 61 — Dense, dark brown, SILTY fine SAND, rounded to well rounded grains, poorly graded, slightly cohesive, moist.
- 23 — Compact, dark brown with red and black streaks, SILTY fine SAND, rounded to well rounded grains, poorly graded, slightly cohesive, moist to wet.
- 25 — Compact, yellow-brown to tan-brown with red streaks, fine SANDY SILT with some CLAY, cohesive, moist.
- LL=33, PI=6, >200 — Very dense, yellow-orange, fine SANDY SILT with CLAY, (decomposed SILTSTONE/SANDSTONE), moist.
- REC=41%, RQD=24% — GRAYWACKE, gray-green, intensely weathered, moderately hard, moderately fractured.
- REC=96%, RQD=68% — GRAYWACKE, orange-brown to gray, intensely weathered, moderately hard to hard, intensely fractured; fractures open through bedding, and dip @ 40°-60°.
- REC=100%, RQD=30% — GRAYWACKE, orange-brown, intensely weathered, moderately hard to hard, intensely fractured, fractures open to close with dip @ 30°-60°.
- REC=94%, RQD=71% — GRAYWACKE, orange-brown to gray, intensely to moderately weathered, hard, intensely fractured, fractures open to close @ dip 30°-60°.
- REC=94%, RQD=68% — GRAYWACKE, gray with orange stains, moderately to slightly weathered, hard, intensely fractured, fractures open, random, and dip @ 30°-65°.
- REC=100%, RQD=55% — GRAYWACKE, gray, moderately to slightly weathered, hard, intensely fractured, fractures open to closed, random, smooth to rough, and dip @ 5°-80°.
- REC=100%, RQD=68% — GRAYWACKE, gray, slightly weathered, hard, intensely fractured, fractures random, tightly closed, breaks through foliation/bedding, and @ dip 70°, slightly metamorphosed.
- REC=80%, RQD=72% — GRAYWACKE, gray, slightly weathered, hard, intensely fractured, fractures random, open, slightly metamorphosed.
- REC=100%, RQD=100% — GRAYWACKE, gray, fresh, very hard, unfractured, calcite veins, slightly metamorphosed.
- REC=96%, RQD=96% — GRAYWACKE, gray, fresh, very hard, unfractured, calcite veins, slightly metamorphosed.
- REC=96%, RQD=88% — GRAYWACKE, gray, slightly weathered to fresh, very hard, moderately to slightly fractured, fractures slightly open, calcite veins, slightly metamorphosed.

5-25-95

95-7
45' Lt. Sta. 170+13 C/L SFOBB — 152.1

Friction Ratio (%) — Tip Bearing (TSF) — 08-09-95

Elevations: 150, 140, 130, 120, 110, 100, 90, 80, 70, 60, 50, 40, 30, 20, 10, 0, -10, -20, -30

170+00 — 170+50

PROFILE
1" = 10'

ENGINEERING SERVICE CENTER — STRUCTURE FOUNDATIONS
DRAWN BY / CHECKED BY — 9-95
FIELD INVESTIGATION BY: UOMAN

State of CALIFORNIA
DEPARTMENT OF TRANSPORTATION
DIVISION OF STRUCTURES
STRUCTURE DESIGN

CU: 04
EA: 043471

BRIDGE NO. 34-0004 — POST MILE 7.6/8.0

SAN FRANCISCO-OAKLAND BAY BRIDGE-EAST VIADUCT
EARTHQUAKE RETROFIT PROJECT NO. 19
LOG OF TEST BORINGS 6 OF 13

ORIGINAL SCALE IN INCHES FOR REDUCED PLANS

DISREGARD PRINTS BEARING EARLIER REVISION DATES

REVISION DATES (PRELIMINARY STAGE ONLY) — SHEET OF

DIST	COUNTY	ROUTE	POSTMILES TOTAL PROJECT	SHEET NO	TOTAL SHEETS
04	SF	80		107	137

PLANS APPROVAL DATE

REGISTERED GEOLOGIST — CERTIFIED ENGINEERING GEOLOGIST — STATE OF CALIFORNIA

CONTRACT NO. 04-012024

CONTRACT CHANGE ORDER NO. 73

SHEET 251 OF 330

DIST	COUNTY	ROUTE	POST MILES TOTAL PROJECT	SHEET NO	TOTAL SHEETS
04	SF	80		108	137

KA Cole

REGISTERED GEOLOGIST K. A. COLE No. 1039 Exp. 6-30-96 CERTIFIED ENGINEERING GEOLOGIST STATE OF CALIFORNIA

PLANS APPROVAL DATE

CONTRACT NO. 04-012089

CONTRACT CHANGE ORDER NO 73

SHEET 252 OF 280

San Francisco - Oakland Bay Bridge Seismic Retrofit at Yerba Buena Island
Bent YBI-1, Boring 95-1
Downhole P- and S-wave Interval Velocities

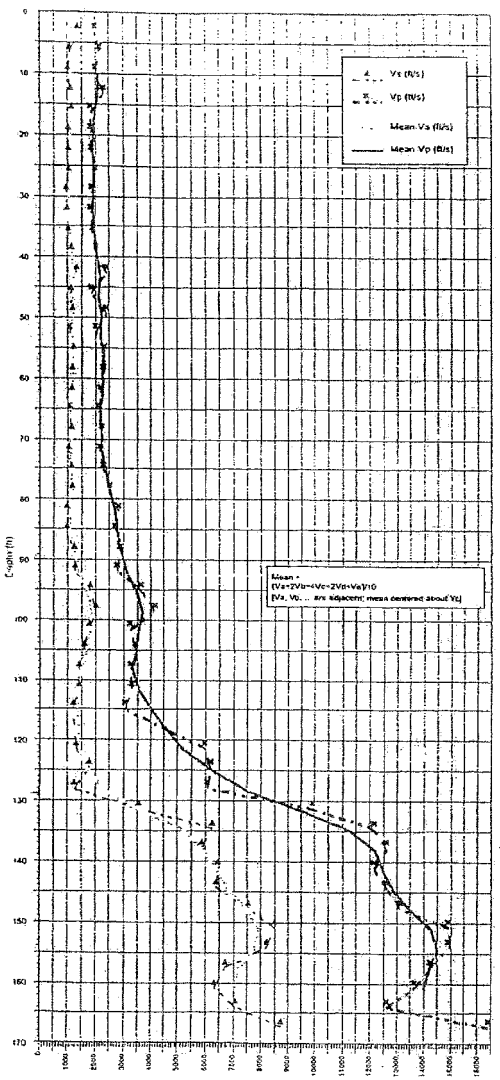

As-built Log of Test Borings sheet is considered an information document only.
As such, the State of California registration seal with signature, license number, and registration certificate expiration date will not be required.
This drawing is available and presented only for the convenience of any bidder, contractor, or other interested party.

DIST	COUNTY	ROUTE	KILOMETER POST- TOTAL PROJECT	Sheet No.	Total sheets
04	SF ▲	80		52 ▲	65 ▲

YBI TRANSITION STRUCTURES

AS-BUILT LOG OF TEST BORINGS NO. 7

The State of California or its officers or agents shall not be responsible for the accuracy and completeness of electronic copies of this plan sheet.

CU: 04251 ▲
EA: 012051 ▲

BRIDGE NO. 34-0006 L/R

An OYO Model 170 Suspension Logging system was used by Caltrans to obtain Vs and Vp measurements.

SAN FRANCISCO-OAKLAND BAY BRIDGE-EAST VIADUCT

EARTHQUAKE RETROFIT PROJECT NO. 19

LOG OF TEST BORINGS 7 OF 13

ENGINEERING SERVICE CENTER	STRUCTURE FOUNDATIONS	FIELD INVESTIGATION BY:	State of CALIFORNIA DEPARTMENT OF TRANSPORTATION	DIVISION OF STRUCTURES STRUCTURE DESIGN	BRIDGE NO. 34-0004 POST MILE 7.5/8.0
DRAWN BY [signature] 9-95					
CHECKED BY					

ORIGINAL SCALE IN INCHES FOR REDUCED PLANS 0 1 2 3

CU: UH
EA: 043471

DISREGARD PRINTS BEARING EARLIER REVISION DATES

REVISION DATES (PRELIMINARY STAGE ONLY) SHEET OF

LEGEND OF BORING OPERATIONS

LEGEND OF EARTH MATERIALS

LEGEND OF ENGINEERING SOILS

NOTE: Classification of earth material as shown on this sheet is based upon field inspection and is not to be construed to imply mechanical analysis.

CONTRACT NO. 04-012064

CONTRACT CHANGE ORDER NO. 223

SHEET 223 OF 260

DIST.	COUNTY	ROUTE	POST MILES TOTAL PROJECT	SHEET NO.	TOTAL SHEETS
04	Ala	80		109	137

REGISTERED ENGINEERING GEOLOGIST

R.W. FOK
No. 78
Exp. 6-30-97
CERTIFIED ENGINEERING GEOLOGIST
STATE OF CALIFORNIA

PLANS APPROVAL DATE

The State of California or its officers or agents shall not be responsible for the accuracy or completeness of electronic copies of this plan sheet.

LOG OF BORING NO. YBIc.

SAN FRANCISCO-OAKLAND BAY BRIDGE (PIER NO. YBI)

RESIDENT ENGINEER'S REPORT

HOLE NO. YBIc.

Elevation +149.3' Elevation Surface of Roadway.

Depth to Rock Surface: +10.5'

Nature and Thickness of Deposits to Rock Surface: +149.3' to +20.0' Loose Sand; Sand +20.0' to +10.9, Sandy Clay.

Date of Drilling: Sept 7 to Sept 29 '53

DRILL CORE RECORD

Length of Drilling	Core Recovery	Per Cent Recovery	Condition of Core	Character of Rock	Structural Features	Remarks
				Fine, Loose, Very Dry Sand.		
+141.3'				Medium-Grained, Very Dry, Fairly Loose, Sand.		
+138.8				Sample YBIc-1 - 118 #/cu.ft. Average.		
				Medium-Grained, Very Dry, Fairly Loose, Sand.		
				Medium-Grained, Dry, Slightly Clayey, Partially Compacted Sand, Sample YBIc-2 - 120 #/cu.ft. Average.		
+130.0'				Medium-Grained, Dry, Slightly Clayey, Partially Compacted		
+127.8				Sand.		
				Medium-Grained, Dry, Slightly Connected, Somewhat Clayey,		
				Brown Sand, 3 Samples YBIc-3, Average 116 #/cu.ft. Samples		
+117.5'				10, 11 and 12 Expected to Be Most Typical of Undisturbed		
+115.4'				Sand, Medium-Grained but Soft and Readily Crushed		
				Sand Compacted.		
				Fine, Dry, Brown, Sand, Slightly Clayey, Very Easily		
+99.0'				Crushed to Fine Powder, Sample YBIc-4 - 113 #/cu.ft.		
+97.0'				Average.		
				Fine, Dry, Brown, Sand, Slightly Clayey, Very Easily		
				Crushed to Fine Powder, but Slightly Larger Grain		
				Size.		
				Similar Sand as Above, Slightly More Moist and		
+64.1'				Compact, Sample YBIc-5 - 117 #/cu.ft. Average.		
+62.3'				Similar Sand as Above, Slightly More Moist and		
				Compact.		
				Moist, Medium-Grained, Compact, Brown, Sand.		
				Sample YBIc-6 Taken between Elevation +68.6 and		
				+66.6, 127 #/cu.ft. Average.		
				Moist, Medium-Grained, Compact, Brown, Sand		
+58.5'				between Elevation +66.6 and +46.5'		
+58.6'				Moist, Compact, Medium-Grained, Brown, Sand Contain-		
				ing Excess Moisture from Wetting of Hole. Sand		
				Readily Compacted. Sample YBIc-7 Taken between		
				Elevation +46.5' to +44.5'. 131 #/cu.ft. Average.		
				Moist, Compact, Medium-Grained, Brown, Sand		
				Containing Excess Moisture from Jetting of Hole.		
				Similar Sand as Above to Elevation +24.0', Most		
+46.5'				Change to 1-8 Class Hard-Grained Dark-Grey Quartz		
+44.5'				Sand at +24.0'. Flow Structure is Very Permeable.		
				Clean, Grey, Sand, at Elevation +22.5'.		
				Abrupt change at +20.5' to a Stiff, Yellow Clay, Sand,		
				which becomes a Sandy Clay, before +20.0.		
				Very Stiff, Yellow, Sandy Clay with numerous Inclusions		
+21.0'				of Brittle, very Porous, Red and Black Material also		
+21.5'				of Soft, Green, Clay. Sample YBIc-8, 135 #/cu.ft. Average.		
+20.5'				Very Stiff, Yellow, Sandy, Clay with numerous Inclusions		
+16.5'				of Brittle, very Porous, Red and Black Material also		
+14.6'				of Soft, Green, Clay.		
+10.9'				Top of Bedrock at Elevation +10.9'		
+8.3'				Fairly Soft, Broken Sandstone. Approx. 50 Per Cent		
+5.0'				Core Recovery, +10.9' to +8.3'.		
+3.0'				Medium Hard, Grey Sandstone, changing to Hard, Grey,		
0.0				Sandstone at Elev. +3.0'.		
-3.0'				95 Per Cent Core Recovery between Elev. +5.0' and +8.3		
-3.0'				18 to 40 Inch Pieces of Core.		
				98% Core Recovery between +3.0' and +1.0' 6 Inch Pieces.		
				98% Core Recovery from +1.0' to Bottom of Boring at		
				-3.0'. Recovery of Hard, Grey, Sandstone, 6" to 8" Pieces		
				Location of Borings: Station 170 + 44 and 32' Left of Center Line of Bridge.		

B.F.M.

As-built Log of Test Borings sheet is considered an information document only. As such, the State of California registration seal with signature, license number, and registration certificate expiration date will not be required. This drawing is available and presented only for the convenience of any bidder, contractor, or other interested party.

DIST	COUNTY	ROUTE	KILOMETER POST- TOTAL PROJECT	Sheet No.	Total sheets
04	SF ▲	80		53 ▲	65 ▲

YBI TRANSITION STRUCTURES

AS-BUILT LOG OF TEST BORINGS NO. 8

The State of California or its officers or agents shall not be responsible for the accuracy and completeness of electronic copies of this plan sheet.

CU: 04251 ▲
EA: 012051 ▲

BRIDGE NO. 34-0006 L/R

LEGEND FOR BORING LOGS AND ADDITS

SOIL CLASSIFICATION TOO A STM

NOTE: Classification of earth materials as shown on this sheet is based upon field inspection and laboratory tests. It is not to be construed or implied as warranty as to subsurface conditions.

ENGINEERING SERVICE CENTER	STRUCTURE FOUNDATIONS	FIELD INVESTIGATION BY:	State of CALIFORNIA DEPARTMENT OF TRANSPORTATION	DIVISION OF STRUCTURES STRUCTURE DESIGN	BRIDGE NO. 33-0023	SAN FRANCISCO–OAKLAND BAY BRIDGE
DRAWN BY	9-95				POST MILE 13.5	EARTHQUAKE RETROFIT PROJECT NO. 2
CHECKED BY	11/15	M. LUQMAN & T. CROSBY				LOG OF TEST BORINGS 9 OF 17

ORIGINAL SCALE IN INCHES FOR REDUCED PLANS 0 1 2 3

CU: 04
EA: 043441

DISREGARD PRINTS BEARING EARLIER REVISION DATES

REVISION DATES (PRELIMINARY STAGE ONLY)

SHEET 41 OF 49

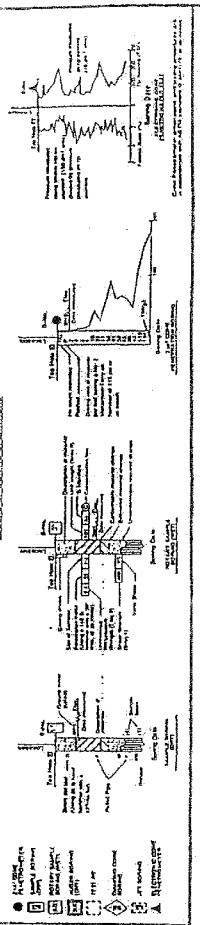

DIST	COUNTY	ROUTE	POST MILES TOTAL PROJECT	SHEET NO.	TOTAL SHEETS
04	Ala	80		110	137

CONTRACT NO. 04-012024

CONTRACT CHANGE ORDER NO 73

SHEET 254 OF 280

R.W. FOX
REGISTERED ENGINEERING GEOLOGIST

REGISTERED GEOLOGIST R.W. FOX No. 76 Exp. 6-31-97 CERTIFIED ENGINEERING GEOLOGIST STATE OF CALIFORNIA

PLANS APPROVAL DATE

The State of California or its officers or agents shall not be responsible for the accuracy or completeness of electronic copies of this plan sheet.

LOG OF BORING NO. YB1b.

Elevation +95.7', Elevation of Ground Surface. 1 (Excavated)

Soft, Silty, Sand.

Soft, Silty, Sand. The Soil is Fairly Dry and Well Compacted. The Most of It is Silty and somewhat Cemented but Numerous Pockets and Strata of Clean, Permeable, Non-Cemented, Sand also Occur, of Varying Thickness and Extent.

+44.0' Soft, Brown, Silty, Sand. Same as Described Above.
+44.0' Sample YB1b-1, 123#/cu.ft. Average.

Soft, Brown, Silty, Sand. Same as Described Above.

+29.0' Soft, Brown, Silty, Sand. Same as Described Above.
+28.2' Sample YB1b-2, 130#/cu.ft. Average.

Soft, Brown, Silty, Sand. Same as Described Above.

+16.5' Clayey, Sand at +16.5'.

+10.0' Gradual Change to a Sandy, Clay at Elevation +10.0'.

Decomposed Rock at Elevation +6.0.

+4.5' Top of Bedrock at Elevation +4.5'.

0.0' Soft, Broken, Sandstone, Brown in Color, Very Friable at Surface but Gradually Increasing in Hardness with Depth.

-9.7' Bottom of Boring at Elevation -9.7'.

Location of Boring: Station 170+82 and 38' Right of Center Line of Bridge.

SAN FRANCISCO-OAKLAND BAY BRIDGE
RESIDENT ENGINEER'S REPORT
HOLE NO. YB1b.

Depth to Rock Surface: +4.5'. Date of Drilling: Oct. 26 to Nov. 7, 1933.

Nature and Thickness of Deposits: Bedrock Surface: +95.7' to +16.5', Soft, Brown, Silty, Sand +16.5' to +4.5', Clayey, Sand and Sandy, Clay.

DRILL CORE RECORD

Length of Drilling	Core Recovery	Per Cent Recovery	Condition of Core	Character of Rock	Structural Features	Remarks

D.L.H.

As-built Log of Test Borings sheet is considered an information document only. As such, the State of California registration seal with signature, license number, and registration certificate expiration date will not be required. This drawing is available and presented only for the convenience of any bidder, contractor, or other interested party.

DIST	COUNTY	ROUTE	KILOMETER POST- TOTAL PROJECT	Sheet No.	Total sheets
04	SF ▲	80		54 ▲	65 ▲

YBI TRANSITION STRUCTURES
AS-BUILT LOG OF TEST BORINGS NO. 9

The State of California or its officers or agents shall not be responsible for the accuracy and completeness of electronic copies of this plan sheet.

CU: 04 251 ▲
EA: 012051 ▲

BRIDGE NO. 34-0006 L/R

LEGEND OF BORING OPERATIONS

LEGEND OF EARTH MATERIALS

CONSISTENCY CLASSIFICATION FOR SOILS

NOTE: Classification of earth material as shown on this sheet is based upon field inspection and is not to be construed to imply mechanical analysis.

ENGINEERING SERVICE CENTER | STRUCTURE FOUNDATIONS

DRAWN BY: 9-95
CHECKED BY: 11/15/95

FIELD INVESTIGATION BY: M. LUQKAN & T. CROSBY

State of CALIFORNIA DEPARTMENT OF TRANSPORTATION

DIVISION OF STRUCTURES STRUCTURE DESIGN

BRIDGE NO. 33-0025
POST MILE 1.15

SAN FRANCISCO-OAKLAND BAY BRIDGE
EARTHQUAKE RETROFIT PROJECT NO. 2
LOG OF TEST BORINGS 10 OF 17

ORIGINAL SCALE IN INCHES FOR REDUCED PLANS

CU: 04
EA: 043441

DISREGARD PRINTS BEARING EARLIER REVISION DATES

REVISION DATES (PRELIMINARY STAGE ONLY)

SHEET 42- OF 45

CONTRACT NO. 04-012084

CONTRACT CHANGE ORDER NO 33

SHEET 225 OF 720

DIST	COUNTY	ROUTE	POST MILES TOTAL PROJECT	SHEET NO.	TOTAL SHEETS
04	Ala	80		111	137

REGISTERED ENGINEER AND GEOLOGIST — R.W. FOX, No. 18, Exp. 3-31-97, Certified Engineering Geologist, State of California

PLANS APPROVAL DATE

The State of California or its officers or agents shall not be responsible for the accuracy or completeness of electronic copies of this plan sheet.

· LOG OF BORING NO. YB1a ·

Elevation +13.5' Elevation of Ground Surface. (As Excavated)

+123.0' Fine, Dry Loose, Sand, Soil and Locally Pavings of
+120.5' Fine, Dry Soft Sand, Laterally Cracked to a Powder with
Compacts to a Very Dense and Very Moist, Sometimes
Clayey and not Workable Medium Condition.
Sample YB1a-1, 119# / cu ft. Average.
+109.0' Same Material as Above.
+107.8' Same Material as Above, but with Occasional Strata
or Pockets of Loose, Very Permeable Sand.
Sample YB1a-2, 108# / cu ft. Average.
Same Material as Above.
Similar Sand as Above, Some Coarse Material, Up to 1"
Dia. of Clay Lumps in This Sample. Sample YB1a-3,
118# / cu ft. Average.
+93.0' Same Material as Above.
+93.2' Firm Moist Soft Brown Slightly Clayey Sand, Readily
Crumbles to Fine Powder & Compacted to a Hard Mass.
Pockets of Coarse, Quartz Sand Occur at Intervals.
See Sample 1A, B, and LE, Elevation +78.5 to +76.0.
Sample YB1a-4, 118# / cu ft. Average.
+78.5' Layers of Clean Hard Quartz Sand Between +63.0' and
+76.3' +72.0', Below to 62.0' the Layer About Line is Medium-
Grained Slightly Clayey Soft Sand.
Sample YB1a-5, 132# / cu ft. Average.
Layers of Clean Hard Quartz, Sand and Medium-Grained
Slightly Clayey, Soft Sand with Occasional Strata
+63.7' Small Pockets of Clayey Permeable Sand.
+60.5' Layers of Clean, Hard Quartz, Sand and Medium-Grain-
ed, Slightly Clayey, Soft Sand with Occasional Strata
and Pockets of Clean, Permeable, Sand.
Sample YB1a-6, 129# / cu ft. Average.
+47.4' Same Material as Above
+45.1' Moist, Slightly Clayey Soft Brown, Sand.
Clean, Fairly Loosely Compacted Sand between Elev.
+36.9 and +33.0. Sample YB1a-7, 116# / cu ft. Average.
Moist, Slightly Clayey, Soft Brown, Sand. Changes at
+27.5' +30.0 to a Loosely Compacted Clean, Hard, Brown
+33.0' Sand, Free Running when Saturated.
Loosely Compacted, Clean Hard, Brown Sand, Free
Running when Saturated.
Sample YB1a-8, 133# / cu ft. Average.
+19.9' Loosely Compacted, Clean Hard, Brown, Sand, Free
+16.2' Running when Saturated.
Sand becomes Grayish Color at +10.0'. Very Free
Running when Wet and Extremely Workable.
No Sample of Material taken at +10.0.
Abrupt Change at Elev. +6.5 to a Firmly Stiff Very
Sandy Yellow Clay.
+4.2' Firmly Stiff, Very Sandy, Yellow Clay, Changing from a
+1.9' Yellow Color at +4.0' through a Greenish-Yellow to a
Blue-Green at +2.3 and Below.
Sample YB1a-9, 136# / cu ft. Average.
-4.0' Stiff Green Very Sandy Clay which changes to a Very
-6.0' Soft Decomposed Green Rock at Elev. -1.5.
Sample YB1a-10, 120# / cu ft. Average.
-11.0' Very Soft Decomposed Green Rock as Above.
-14.0' Contact of Elev. -8.0' Between Soft Green Serpentine
-16.0' with Occasional Veins of Shale and Some Inclusions of
-20.3' Harder Rock -11.0'.
Stratum of Soft, Blue, Shale between Elev. -14.0' and Elev.
-16.0' (Approx.) 25 Per Cent Core Recovery.
Change to a Hard Blue-Grey Serpentine at -16.0' with
Occasional (3%) Layers of Blue Shale. 40 Per Cent
Core Recovery (93) Per Cent Core Recovery 83% Core Recovery.
Bottom of Boring at Elevation -20.3'.

· SAN FRANCISCO-OAKLAND BAY BRIDGE · (PIER NO. YB1)

· RESIDENT ENGINEER'S REPORT ·

· HOLE NO. YB1a ·

Depth to Rock Surface: - 6.0'. Date of Drilling: Sept. 25 to Oct. 18, '33

Nature and Thickness of Deposits to Rock Surface: +13.5 to -1.5', Sand, Slightly Clayey Sand; -1.5 to -6.0', Decomposed Green Rock.

· DRILL CORE RECORD ·

Length of Drilling	Core Recovered	Per Cent Recovery	Condition of Core	Character of Rock	Structural Features	Remarks
				Location of Boring: Station (7)+05 and 40' Left of Center Line of Bridge.		

0 E.M.

As-built Log of Test Borings Sheet is considered an information document only.
As such, the State of California registration seal with signature, license number, and registration certificate expiration date will not be required.
This drawing is available and presented only for the convenience of any bidder, contractor, or other interested party.

DIST	COUNTY	ROUTE	KILOMETER POST- TOTAL PROJECT	Sheet No.	Total sheets
04	SF ▲	80		65 ▲	65 ▲

YBI TRANSITION STRUCTURES

AS-BUILT LOG OF TEST BORINGS NO. 10

The State of California or its officers or agents shall not be responsible for the accuracy and completeness of electronic copies of this plan sheet.

CU: 04251 ▲ EA: 012051 ▲

BRIDGE NO. 34-0006 L/R

ENGINEERING SERVICE CENTER	STRUCTURE FOUNDATIONS	FIELD INVESTIGATION BY:	State of CALIFORNIA DEPARTMENT OF TRANSPORTATION	DIVISION OF STRUCTURES STRUCTURE DESIGN	BRIDGE NO. 33-0025	SAN FRANCISCO-OAKLAND BAY BRIDGE EARTHQUAKE RETROFIT PROJECT NO. 2
DRAWN BY	9-95	H. LUQMAN & T. CROSBY			POST MILE 1.15	LOG OF TEST BORINGS 11 OF 17
CHECKED BY						

ORIGINAL SCALE IN INCHES FOR REDUCED PLANS — 0 1 2 3

CU: 04 EA: 043441

DISREGARD PRINTS BEARING EARLIER REVISION DATES

REVISION DATES (PRELIMINARY STAGE ONLY)

SHEET 43 OF 49

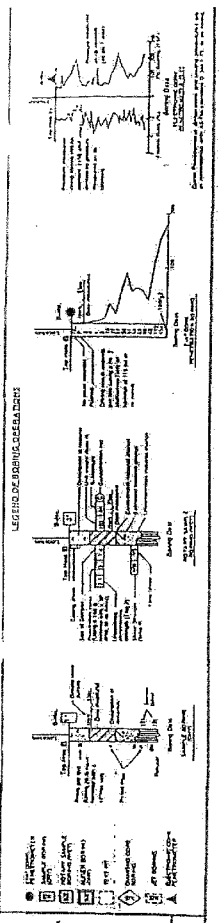

DIST	COUNTY	ROUTE	POST MILES TOTAL PROJECT	SHEET NO.	TOTAL SHEETS
04	Ala	80		112	137

REGISTERED ENGINEERING GEOLOGIST

PLANS APPROVAL DATE

REGISTERED GEOLOGIST E.W. FOX 78 8-31-97 CERTIFIED ENGINEERING GEOLOGIST STATE OF CALIFORNIA

The State of California or its officers or agents shall not be responsible for the accuracy or completeness of electronic copies of this plan sheet.

· LOG OF BORING NO. YB2a ·

Elevation +56.0', Elevation, Surface at Sidewalk

Loose, Dry, Sand, Artificial Fill.

+42.5' Loose, Fairly Dry, Brown, Sand, Artificially
+40.0' Filled, Ground. Sample YB2a-1.

+36.0' Loose, Clean, Dry, Brown, Sand, Evidently Artificially
+33.5' Filled Ground Resulting from Grading of Mildale.
Sample YB2a-2.
Same as Above with Steady Increase in Moisture Content.
Sand more Compact and its Appearance Indicates that Original Ground Line was at +28.0.

+20.0' Moist, Brown, Slightly Clayey Sand.
+17.3' Wet, Slightly Clayey Brown Sand, Sample YB2a-3.
+14.5' Wet, Slightly Clayey, Brown Sand.
+12.0' Wet, Slightly Clayey, Brown, Sand, Sample YB2a-4.
Wet, Slightly Clayey, Brown, Sand.
+8.0' Wet, Brown, Clayey, Sand. Sample YB2a-5.
+6.0' Wet, Brown, Clayey, Sand.

0.0' Elevation 0.0, Mean Lower Low Water.
-1.0' Wet, Brown, Very Slightly Clayey Sand.
-3.7' Saturated, Brown, Very Slightly Clayey, Sand
Sample YB2a-6.
Saturated, Brown, Very Slightly Clayey, Sand.
Clean, Gray, Sand, Over-saturated and Apparently
-14.3' a Quicksand. This Stratum Extends from -9.0 to -15.0'.
-16.8' Very Clayey, Brown, Sand. Sample YB2a-7.
Jar Sample also.
Fairly Soft, Very Clayey and Wet, Brown, Sand.
-22.6' Fairly Soft, Very Clayey and Wet, Brown, Sand.
-26.1' Sample YB2a-8.
Below -31.0, the Clayey, Sand Contains an Increasing Proportion of Gravel, Pebbles up to 2½ dia ϕ-Larger.
-33.3' Cemented, Clayey, Sand With a Large Amount of
-34.5' Included Gravel. Jar Sample only.
-35.5' Top of Bedrock at -35.5. Soft Sandstone Containing Hard Pebbles Starting at Elev. -35.5.
Fairly Soft, Sandstone With Occasional Hard Pebbles or Inclusions of Harder Rock
Hard, Gray and Brown, Medium-Grained, Sandstone With Intermittent Softer Strata. All Rock is a Substantial Rock When In Place.
-53.0' Bottom of Boring at Elev. -53.0'.

Location of Boring:- Station 173+36 and 46' Left of Center Line of Bridge.

· SAN FRANCISCO-OAKLAND BAY BRIDGE · (PIER NO. YB2)
· RESIDENT ENGINEERS REPORT ·
· HOLE NO. YB2a ·

Depth to Rock Surface: -35.5'. Date of Drilling: Aug. 23 to Sept. 6, '33

Nature and Thickness of Deposits to Rock Surface: +56.0' to +20.0', Sand +20.0' to -35.5', Clayey Sand, Some Gravel Below -31.0'.

· DRILL CORE RECORD ·

Length of Drilling	Core Recovered	Per Cent Recovery	Condition of Core	Character of Rock	Structural Features	Remarks

D.L.M.

As-built Log of Test Borings sheet is considered an information document only. As such, the State of California registration seal with signature, license number, and registration certificate expiration date will not be required. This drawing is available and presented only for the convenience of any bidder, contractor, or other interested party.

DIST	COUNTY	ROUTE	KILOMETER POST-TOTAL PROJECT	Sheet No.	Total sheets
04	SF ▲	80		66 ▲	65 ▲

YBI TRANSITION STRUCTURES

AS-BUILT LOG OF TEST BORINGS NO. 11

The State of California or its officers or agents shall not be responsible for the accuracy and completeness of electronic copies of this plan sheet.

CU: 04251 ▲ EA: 012051 ▲

BRIDGE NO. 34-0008 L/R

CONTRACT NO. 04-012084

CONTRACT CHANGE ORDER NO 73

SHEET 256 OF 260

LEGEND OF BORING OPERATIONS

LEGEND OF EARTH MATERIALS

CONSISTENCY CLASSIFICATION FOR SOILS

NOTE: Classification of earth material as shown on this sheet is based upon field inspection and is not to be construed to imply mechanical analysis.

ENGINEERING SERVICE CENTER	STRUCTURE FOUNDATIONS	FIELD INVESTIGATION BY: M. LUQMAN & T. CROSBY	State of CALIFORNIA DEPARTMENT OF TRANSPORTATION	DIVISION OF STRUCTURES STRUCTURE DESIGN	BRIDGE NO. 33-0025 POST MILE 1.15
DRAWN BY	9-95				
CHECKED BY	11/2/95				

ORIGINAL SCALE IN INCHES FOR REDUCED PLANS

CU: 04 EA: 043441

DISREGARD PRINTS BEARING EARLIER REVISION DATES

REVISION DATES (PRELIMINARY STAGE ONLY)

SHEET 44 OF 49

SAN FRANCISCO-OAKLAND BAY BRIDGE
EARTHQUAKE RETROFIT PROJECT NO. 2
LOG OF TEST BORINGS 12 OF 17

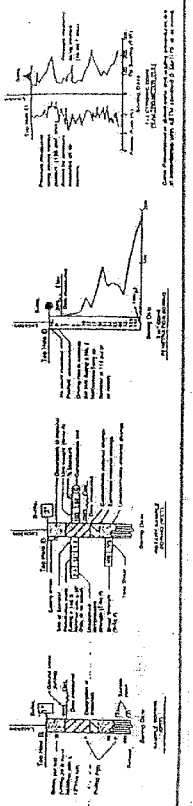

CONTRACT NO. 04-0A2804

CONTRACT CHANGE ORDER NO. 73

SHEET 251 OF 420

DIST	COUNTY	ROUTE	POST MILES TOTAL PROJECT	SHEET NO.	TOTAL SHEETS
04	Ala	80		113	137

REGISTERED ENGINEERING GEOLOGIST

R.W. FOX
No. 78
Exp. 6-11-97
CERTIFIED ENGINEERING GEOLOGIST
STATE OF CALIFORNIA

PLANS APPROVAL DATE

The State of California or its officers or agents shall not be responsible for the accuracy or completeness of electronic copies of this plan sheet.

· LOG OF BORING NO. YB2b ·

· SAN FRANCISCO-OAKLAND BAY BRIDGE · (PIER NO. YB2)

· RESIDENT ENGINEER'S REPORT ·

· HOLE NO. YB2b ·

Depth to Rock Surface: -58.0'. Date of Drilling: Aug. 8 - Aug. 22, 1933.

Nature and Thickness of Deposits to Rock Surface: +38.2 to +26.5', Sand; +26.5' to -22.0, Clayey Sand; -22.0 to -58.0, Sandy Clay.

· DRILL CORE RECORD ·

Length of Drilling	Core Recovery	Per Cent Recovery	Condition of Core	Character of Rock	Structural Features	Remarks

Elevation +38.2', Elevation Surface of Roadway -/

+27.8 Loose, Brown Sand, Filled Material Probably Gravel from Old Mission.

+26.5 Very Slightly Compacted Moist Brown Sand.

+22.8 Sample YB2b-1 - 122# per cu. ft.

+21.0 Very Compact Soil. Probably Surface of Original Undisturbed Gravel. Moist Brown Slightly Clayey Sand.

+17.5 Sample YB2b-2 - 136# per cu. ft.

+15.6 Gradual Increase in Moisture Content, Probably From Seepage Water.

+12.3 Fairly Well Firm Slightly Clayey Sand. Sample YB2b-3 - 131# per cu. ft.

+10.3 Same as Above. Sample YB2b-4 - 135# per cu. ft.

+8.0 Moist Brown Slightly Clayey Sand.

+6.0 Same as Above. Sample YB2b-5 - 134# per cu. ft.

+5.6 Same as Above. Sample YB2b-6 - 138# per cu. ft.

+4.7 Same as Above. Sample YB2b-7 - 136# per cu. ft.

+3.2 Same as Above. Sample YB2b-8 - 138# per cu. ft.

+1.3 Same as Above. Sample YB2b-9 - 138# per cu. ft.

+1.6 Very Slightly Clayey Sand. Sample YB2b-10 - 129# per cu. ft.

-1.4 Moist Brown, Slightly Clayey Sand - Decrease in Clay Content Below -2.0

-6.2 Very Slightly Clayey Med. Brown Sand. Sample YB2b-11 - 119# per cu. ft.

-9.0 Same as Above.

-13.0 Very Slightly Clayey Med. Brown Sand.

-14.4 Sample YB2b-12 - 134# per cu. ft.

Changes to a Med. Clayey Sand, Then a Gradual Change to a Soft Sandy Clay.

-22.0 Soft Moist Yellow Clay, Slightly Sandy.

-24.0 Stiff, Yellow and Brown Very Sandy Clay. Sample YB2b-11.

-28.5 Changes to a Stiff Clayey Sand at -31.0' (135# per cu. ft.

-30.3 Stiff Yellow Clayey Sand, Slightly Clayey Compact Sand. Sample YB2b-12 - 137# per cu. ft.

-33.0 Gradual Change to a Gray, Sandy Clay by -33.0'.

-35.0 Stiff Gray, Sandy Clay.

-35.4 Very Stiff Gray Sandy Clay, with Brown Fragments of Soft Rock. Sample YB2b-13 (-33.0 to -35.0')

-35.9 Clay Similar to Bedrock at Soft, Brown and Gray.

-49.3 Transitions Changing to Compacted Sand and Clay.

-47.3 Sample YB2b-14 (-35.4 to -39.9')

-50.0 Intensely Alternate Layers of Cemented Sand and Sandy Clay with Pebbles and Fragments of Soft Rock.

-48.4 To Elev. -44.0 Then Changing to a Gray Sandy Clay.

-51.8 Hard or Gray Sandy Clay, Soft & More Brown Fragments.

-53.0 Change at -49.5' to Brown Sandy Clay with Many Streaks

-53.2 Sample YB2b-15 (-49.9' to -51.9') Soft, and 11" Core.

-53.4 Same as Above with a Thin Layer of Soft Rock.

-55.0 At -53.5 to -52.5, Sample YB2b-16 (-53.5' to -55.5')

-58.5 Changes to a Very Soft Cemented Sand with Inclusions of White Clay below -51.0.

-68.0 Cemented Sand Similar to a Very Soft Sandstone.

-69.0 Core, Sample YB2b-17, (-59.9' to -61.9') Very Dense Cemented Sand Soft Gravel Cemented by Clay or Caney. Sample YB2b-18 (-63.9' to -65.9') Besides Thickening of the Cemented Sand at -64.0 Sandstone which is the Hard Formation by Sample Below -70.0, Very Easily Drilled by Steel Bit Exercise.

Top of Bedrock - 58.0

Diamond Drilled Very Hard Flelland Shale from -58.8 to -68.0, then Hard Greywacke Shale to -69.8.

Location of Boring:- Station 173 +39.8' and 35' Right of Center Line of Bridge

As-built Log of Test Borings sheet is considered an information document only. As such, the State of California registration seal with signature, license number, and registration certificate expiration date will not be required. This drawing is available and presented only for the convenience of any bidder, contractor, or other interested party.

DIST	COUNTY	ROUTE	KILOMETER POST- TOTAL PROJECT	Sheet No.	Total sheets
04	SF ▲	80		57 ▲	65 ▲

YBI TRANSITION STRUCTURES

AS-BUILT LOG OF TEST BORINGS NO. 12

The State of California or its officers or agents shall not be responsible for the accuracy or completeness of electronic copies of this plan sheet.

CU: 04251 ▲ EA: 012051 ▲

BRIDGE NO. 34-0006 L/R

LEGEND OF EARTH MATERIALS

NOTE: Classification of earth materials as shown on the plans is based upon field inspection and is not to be construed as imply mechanical analysis.

ENGINEERING SERVICE CENTER	STRUCTURE FOUNDATIONS	FIELD INVESTIGATION BY:	State of CALIFORNIA DEPARTMENT OF TRANSPORTATION	DIVISION OF STRUCTURES STRUCTURE DESIGN	BRIDGE NO. 33-0025	SAN FRANCISCO–OAKLAND BAY BRIDGE EARTHQUAKE RETROFIT PROJECT NO. 2
DRAWN BY	9-95	M. LUDMAN & T. CROSBY			POST MILE 12.5	LOG OF TEST BORINGS 13 OF 17
CHECKED BY	11/2/95					

ORIGINAL SCALE IN INCHES FOR REDUCED PLANS → 0 1 2 3

CU: 04 EA: 043441

DISREGARD PRINTS BEARING EARLIER REVISION DATES →

REVISION DATES (PRELIMINARY STAGE ONLY)

SHEET 45 OF 149

FOR PLAN VIEW, SEE "LOG OF TEST BORINGS, 1 OF17"

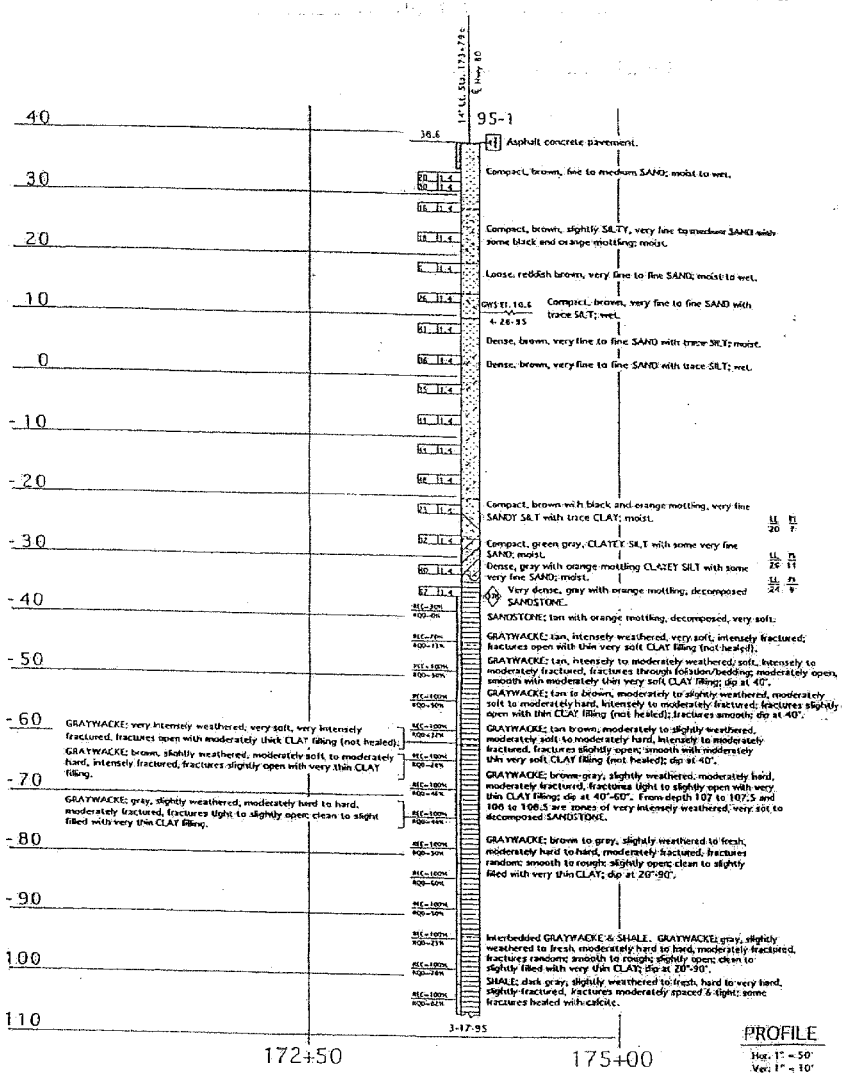

PROFILE
Hor. 1" = 50'
Ver. 1" = 10'

San Francisco - Oakland Bay Bridge Seismic Retrofit at Yerba Buena Island
Bent YBI-2, Boring 95-1
Downhole P- and S-wave Interval Velocities

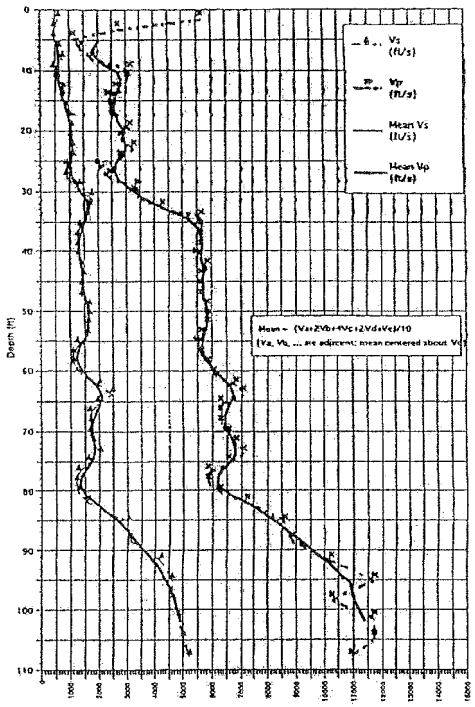

An OYO Model 170 Suspension Logging system was used by Caltrans to obtain Vs and Vp measurements.

DIST	COUNTY	ROUTE	POST MILES TOTAL PROJECT	SHEET NO	TOTAL SHEETS
04	Ala	80		114	137

REGISTERED ENGINEERING GEOLOGIST

R.W. FOX
No. 76
Exp. 8-31-97
CERTIFIED ENGINEERING GEOLOGIST
STATE OF CALIFORNIA

PLANS APPROVAL DATE

The State of California or its officers or agents shall not be responsible for the accuracy or completeness of electronic copies of this plan sheet.

CONTRACT NO. 04-012004
CONTRACT CHANGE ORDER NO. 73
SHEET 256 OF 290

As-built Log of Test Borings sheet is considered an information document only. As such, the State of California registration seal with signature, license number, and registration certificate expiration date will not be required. This drawing is available and presented only for the convenience of any bidder, contractor, or other interested party.

DIST	COUNTY	ROUTE	KILOMETER POST- TOTAL PROJECT	Sheet No.	Total sheets
04	SF	80		58	65

YBI TRANSITION STRUCTURES
AS-BUILT LOG OF TEST BORINGS NO. 13

The State of California or its officers or agents shall not be responsible for the accuracy or completeness of electronic copies of this plan sheet.

CU: 04251
EA: 012051

BRIDGE NO. 34-0006 L/R

ENGINEERING SERVICE CENTER	STRUCTURE FOUNDATIONS	FIELD INVESTIGATION BY:	State of CALIFORNIA DEPARTMENT OF TRANSPORTATION	DIVISION OF STRUCTURES STRUCTURE DESIGN	BRIDGE NO. 33-0025	SAN FRANCISCO-OAKLAND BAY BRIDGE EARTHQUAKE RETROFIT PROJECT NO. 2
DRAWN BY: Irma Gamero 9/95		M. LUQMAN / T. CROSBY			POST MILE	LOG OF TEST BORINGS 2 OF 17
CHECKED BY: 11/1/95					1.15	

ORIGINAL SCALE IN INCHES FOR REDUCED PLANS — 0 1 2 3

CU: 04
EA: 043441

DISREGARD PRINTS BEARING EARLIER REVISION DATES

REVISION DATES (PRELIMINARY STAGE ONLY)

SHEET 34 OF 49

FOR PLAN VIEW SEE "LOG OF TEST BORINGS 1 OF 17"

DIST	COUNTY	ROUTE	POST MILES TOTAL PROJECT	SHEET NO.	TOTAL SHEETS
04	SF	80		115	137

REGISTERED ENGINEER-CIVIL/GEOLOGIST — R.W. FOX, No. 28, Exp. 6-31-97, CERTIFIED ENGINEERING GEOLOGIST, STATE OF CALIFORNIA

PLANS APPROVAL DATE

The State of California or its officers or agents shall not be responsible for the accuracy or completeness of electronic copies of this plan sheet.

95-3

37.9

AC, fine SAND.
GRAVEL with some fine SAND.
Loose, yellow-brown, SILTY fine SAND with some trace of GRAVEL (1"-1.5"); wet.
Dark brown-black, GRAVEL and shell fragments.
Very loose, dark brown-black, SILTY fine SAND; wet. LL 0, PI 22 8
Loose, light gray, mottled orange-brown, SILTY fine to medium SAND; wet.
Compact, light gray, mottled green, SILTY fine to medium SAND; wet.
Slightly compact, gray, mottled brown, SILTY fine to medium GRAVELLY SAND with trace of CLAY.
4-28-95
Slightly compact, gray, mottled brown, fine to medium SAND with trace of SILT; wet.
Compact-dense, tan brown, SILTY fine to medium SAND; moist to wet.
Compact, tan brown, SILTY fine to medium SAND; moist to wet.
Dense, tan brown, SILTY fine to medium SAND; moist to wet.
Slightly compact to compact, tan brown, SILTY fine to medium fine to medium SAND, mottled dark brown, with trace of CLAY, coarse SAND and GRAVEL; moist to wet.
Compact, tan brown, mottled dark brown, SILTY-CLAYEY fine SAND; moist to wet. LL 0, PI 22 6
Hard, gray, SANDY-SILTY CLAY; moist.
Very dense, gray, decomposed GRAYWACKE, composed of CLAYEY fine SAND to fine SANDY CLAY with some GRAVEL; moist. LL 0, PI 26 10
Very dense, yellow-brown, decomposed SANDSTONE, composed of SILTY SAND); moist.
GRAYWACKE, brown, intensely to moderately weathered; soft to moderately soft, intensely fractured, fractures open filled with soft CLAY; fractures dip at 30°-70°.
GRAYWACKE, yellow-brown, intensely weathered, very soft to moderately soft, intensely fractured, fractures filled with soft CLAY; fractures dip at 20°-60°.
GRAYWACKE, gray interbedded with brown SHALE; intensely weathered; soft to moderately hard, intensely to moderately fractured, fractures filled with stiff CLAY; dip at 40°-70°; laminated to slightly foliated, slightly metamorphosed.
GRAYWACKE, brown, interbedded with lenses of SHALE, moderately weathered, moderately hard, intensely to moderately fractured, planar fractures through foliation/bedding at 35°-50°; slightly open; filled with CLAY.
GRAYWACKE, brown, intensely to moderately weathered, moderately soft, intensely fractured, fractures random and through bedding; dip at 0°-20°; fractures partially open.
GRAYWACKE, gray, slightly weathered to fresh, hard, slightly fractured, fractures tight to slightly open; healed with calcite; break through foliation/bedding; smooth dip at 65°-70°, calcite veins.
GRAYWACKE, gray, slightly weathered to fresh, hard, slightly fractured, fractures tight to slightly open; healed with calcite; calcite veins.
GRAYWACKE, gray, slightly weathered to fresh, hard, intensely to moderately fractured, fractures tight to slightly opened; healed with calcite; shear zones; calcite veins, slightly metamorphosed.
GRAYWACKE, gray, slightly weathered, hard to very hard, intensely to moderately fractured, fractures dip at 45°-65°; healed with CLAY and calcite, calcite veins.
GRAYWACKE, gray, slightly weathered to fresh, hard, intensely to moderately fractured; fractures random at dip 15°-60°; healed with calcite, calcite veins, 2" sheared zone, filled with CLAY.
GRAYWACKE, gray, slightly weathered to fresh, hard, slightly to moderately fractured, fractures random at dip 10°-25°; completely healed with calcite.
GRAYWACKE, gray, fresh, hard to very hard, very slightly fractured, mechanical breaks at > 5' associated with calcite veins, slightly metamorphosed.
GRAYWACKE, gray, fresh, very hard, very slightly fractured; mechanical breaks through foliation bedding at dip 40°, calcite veins; slightly metamorphosed.
GRAYWACKE, gray, fresh, very hard, very slightly fractured, calcite veins, slightly metamorphosed
GRAYWACKE, gray, fresh, very hard, very slightly fractured, calcite veins, slightly metamorphosed.

REC=100% RQD=59%
REC=100% RQD=71%
REC=100% RQD=59%
REC=92% RQD=40%
REC=92% RQD=52%
REC=100% RQD=69%
REC=100% RQD=95%
REC=96% RQD=74%
REC=100% RQD=52%
REC=100% RQD=72%
REC=100% RQD=92%
REC=100% RQD=97%
REC=100% RQD=99%
REC=100% RQD=98%

4-5-95

30 20 10 0 -10 -20 -30 -40 -50 -60 -70 -80 -90 -100 -110

176+00 176+50

PROFILE 1"=10'

San Francisco - Oakland Bay Bridge Seismic Retrofit at Yerba Buena Island
Bent YB-3, Boring 95-3
Downhole P- and S-wave Interval Velocities

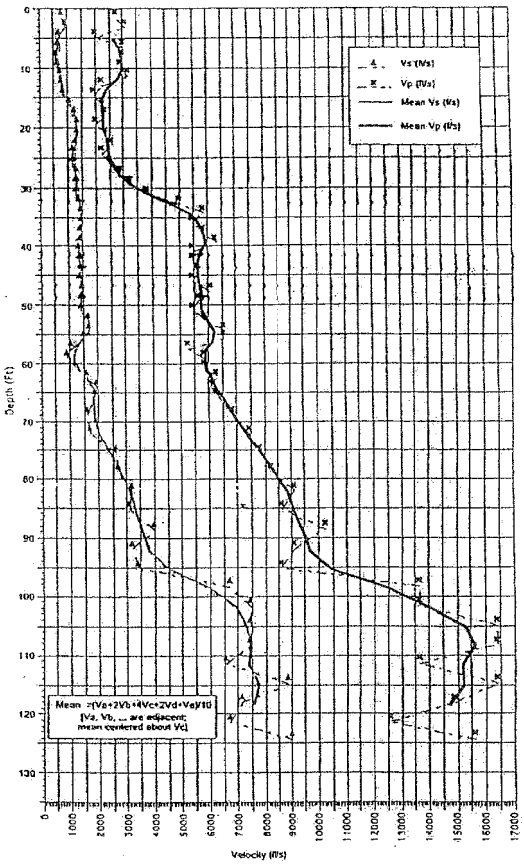

An OYO Model 170 Suspension Logging system was used by Caltrans to obtain Vs and Vp measurements.

CONTRACT NO. 04-012491

CONTRACT CHANGE ORDER NO. 23

SHEET 25A OF 296

As-built Log of Test Borings sheet is considered an information document only. As such, the State of California registration seal with signature, license number, and registration certificate expiration date will not be required. This drawing is available and presented only for the convenience of any bidder, contractor, or other interested party.

DIST	COUNTY	ROUTE	KILOMETER POST-TOTAL PROJECT	Sheet No.	Total sheets
04	SF	80		59	65

YBI TRANSITION STRUCTURES
AS-BUILT LOG OF TEST BORINGS NO. 14

The State of California or its officers or agents shall not be responsible for the accuracy and completeness of electronic copies of this plan sheet.

CU: 04281
EA: 012091

BRIDGE NO. 34-0006 L/R

LEGEND OF BORING OPERATIONS

CONSISTENCY CLASSIFICATION FOR SOILS

Cohesive	Granular	Blows/ft (Nm)	Penetration Resistance (Blows/ft)
Very Soft	Very Loose	0-2	0-4
Soft	Loose	3-4	5-10
Slightly Compact	Slightly Compact	5-8	11-30
Compact	Compact	9-15	31-50
Very Stiff	Dense	16-30	51-90
Hard	Very Dense	>30	>90

NOTE: Classification of earth materials as shown on this sheet is based upon that required by the Standard Penetration Test Method (ASTM D1586) and is considered an engineering estimate.

ENGINEERING SERVICE CENTER	STRUCTURE FOUNDATIONS	FIELD INVESTIGATION BY:	State of CALIFORNIA DEPARTMENT OF TRANSPORTATION	DIVISION OF STRUCTURES STRUCTURE DESIGN	BRIDGE NO. 33-0025	SAN FRANCISCO-OAKLAND BAY BRIDGE
DRAWN BY Eddie Fong 9/95		H. LUQMAN & T. CROSBY			POST MILE 1/5	EARTHQUAKE RETROFIT PROJECT NO. 2
CHECKED BY 11/1/95						LOG OF TEST BORINGS 4 OF 17

ORIGINAL SCALE IN INCHES FOR REDUCED PLANS

CU: 04
EA: 043441

DISREGARD PRINTS BEARING EARLIER REVISION DATES

REVISION DATES (FIELD-HWAY STAGE ONLY)

SHEET 36 OF 39

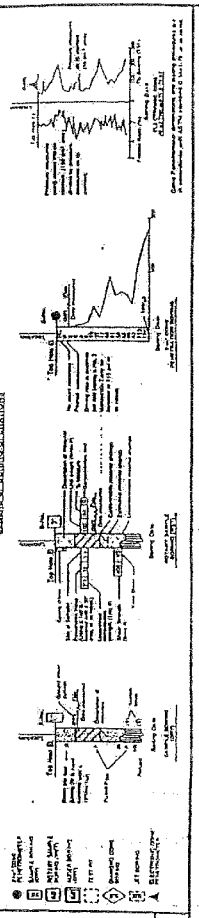

DIST	COUNTY	ROUTE	POST MILES TOTAL PROJECT	SHEET NO.	TOTAL SHEETS
04	Ala	80		116	137

REGISTERED ENGINEERING GEOLOGIST — A.W. FOX — 7E — Exp. 6-31-97 — CERTIFIED ENGINEERING GEOLOGIST — STATE OF CALIFORNIA

PLANS APPROVAL DATE

The State of California or its officers or agents shall not be responsible for the accuracy or completeness of electronic copies of this plan sheet.

SAN FRANCISCO-OAKLAND BAY BRIDGE (PIER YB3)

—RESIDENT ENGINEER'S REPORT—

LOG OF BORING No YB3a

Depth to Rock Surface: -34.8'. HOLE NO YB3a. Date of drilling: July 31-Aug 7, 1933.

Nature and thickness of deposits to rock surface: Elev. +38.1 to +24.0, artificial fill, +24.0 to -23' sandy clay brown and yellowish sand, -20.0 to -23' clean gray sand, from -32.5 to -33' soft sandstone.

Elev.	
+38.1	Surface of Parade Ground.
	Loose, fine, brown, sand. All material above approximate Elev. +24.0 is an artificial fill.
+32.0	
+30.5	Sample YB3a-1, (105# per cu ft.) is loose, fine, brown, sand.
+28.3	
+25.8	
+24.0	Sample YB3a-2, (113# per cu ft.).
+23.6	Very slightly, compacted, fine, brown, sand. Filled material.
+21.8	Probable top of original ground, Elev. +24±.
+18.8	
+16.0	Sample YB3a-3, (134# per cu ft.).
	Compact, yellowish-brown, slightly clayey sand.
+12.4	
+11.0	Sample YB3a-4, (134# per cu ft.).
	Compact, slightly clayey, brown, sand.
+7.2	Sample YB3a-5, (135# per cu ft.)
+5.5	Similar to YB3a-4, but with gradually increasing
+2.6	moisture content.
	Sample YB3a-6, (133# per cu ft.)
0.0	Compact, moist, slightly clayey, brown, sand.
-0.8	Sample YB3a-7, (132# per cu ft.). Wet, brown,
-2.9	compact, sand, with but very little clay present.
-3.4	Thin layer (4") of sandy clay.
-5.4	Sample YB3a-8, (131# per cu ft.)
-8.0	Wet, brown, slightly clayey, sand. Same for
-10.8	sample YB3a-9, (121# per cu ft.).
-12.4	Sample YB3a-10, (128# per cu ft.). Fairly
	compact, saturated, very slightly, clayey,
	brown, sand. Same also for sample YB3a-11.
	Gradual increase in consolidation, same
-22.5	clayey sand.
-25.0	Between -20.0 and -23± a stratum of
	clean, gray, sand, occurs.
-30.1	Sample YB3a-12, (136# per cu ft.).
-33.4	Abrupt change occurs at -23.4 to a
-35.0	yellowish-green, very stiff, and dense,
	clay, which decreases in sand content
	with depth and becomes more yellow in color.
	Sample YB3a-13, (136# per cu ft.). Very
-41.0	stiff, dense, slightly sandy, yellow, clay, with
	occasional fragments of hard rock.
	Soft, sandstone below -31±.
Bottom of boring	Sample YB3a-14, change from soft, sand-
	stone, to a soft, shale, with imbedded
	hard, angular, pieces and rounded, pebbles.

Core drilled from -33.4 to -309. No core recovered -33± to -34±. Approx. 55% recovery below -34± of hard, sandstone, fair planes.

DRILL CORE RECORD

Length of Drilling	Core Recovered	Per Cent Recovered	Condition of Core	Character of Rock	Structural Features	Remarks
				Location: Station 176+31 40' N. of ℄		

Pier No. YB3 - Boring No. YB3a.

As-built Log of Test Borings sheet is considered an information document only.
As such, the State of California registration seal with signature, license number, and registration certificate expiration date will not be required.
This drawing is available and presented only for the convenience of any bidder, contractor, or other interested party.

DIST	COUNTY	ROUTE	KILOMETER POST - TOTAL PROJECT	Sheet No.	Total sheets
04	SF ▲	80		60 ▲	65 ▲

YBI TRANSITION STRUCTURES

AS-BUILT LOG OF TEST BORINGS NO. 15

The State of California or its officers or agents shall not be responsible for the accuracy and completeness of electronic copies of this plan sheet.

CU: 04 251 ▲ EA: 0120S1 ▲

BRIDGE NO. 34-0006 L/R

CONTRACT NO. 04-0120R4

CONTRACT CHANGE ORDER NO. 33

SHEET 46 OF 49

ENGINEERING SERVICE CENTER	STRUCTURE FOUNDATIONS	FIELD INVESTIGATION BY:	State of CALIFORNIA DEPARTMENT OF TRANSPORTATION	DIVISION OF STRUCTURES STRUCTURE DESIGN	BRIDGE NO. 33-0025 POST MILE M5	SAN FRANCISCO-OAKLAND BAY BRIDGE EARTHQUAKE RETROFIT PROJECT NO. 2
DRAWN BY	9-93	H. LUGNANI & T. CROSBY				LOG OF TEST BORINGS 14 OF 17
CHECKED BY	11/2/16					

ORIGINAL SCALE IN INCHES FOR REDUCED PLANS — 0 1 2 3

CU: 04 EA: 043441

DISREGARD PRINTS BEARING EARLIER REVISION DATES ——

REVISION DATES (PRELIMINARY STAGE ONLY) 11-2-93

SHEET 46 OF 49

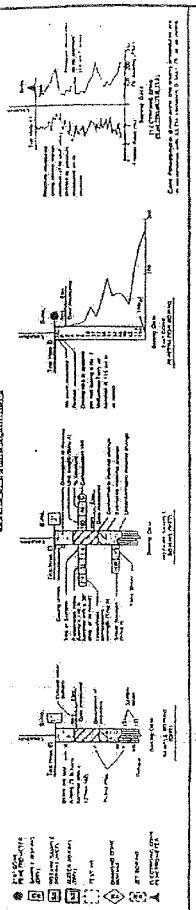

DIST	COUNTY	ROUTE	POST MILES TOTAL PROJECT	SHEET NO.	TOTAL SHEETS
04	Ala	80		117	137

CONTRACT NO. 04-0120R4

CONTRACT CHANGE ORDER NO 73

SHEET 261 OF 280

REGISTERED ENGINEERING GEOLOGIST

PLANS APPROVAL DATE

The State of California or its officers or agents shall not be responsible for the accuracy or completeness of electronic copies of this plan sheet.

LOG OF BORING NO. 318

Elevation +29.6

Sand and Clay fill

+20.1

Sand-probably fill.

+5.1

Probable Bottom of Fill.
Elevation 0.0, Mean Lower Low Water

Compact Sand

-40.4

Soft, broken Sandstone

-62.4

Note: Not possible to define where fill ends and natural formation begins.

SAN FRANCISCO-OAKLAND BAY BRIDGE
GEOLOGIST'S REPORT
HOLE NO. 318

Depth to Rock Surface: 70.0'
Date of Drilling: Jan 11-14, 1932
Nature and Thickness of Deposits to Rock Surface: +29.6 to +20, Sand and Clay fill; +20 to +5, Sand; +5 to -40.4, compact Sand

DRILL CORE RECORD

Length of Drilling	Core Recovered	Per Cent. Recovery	Condition of Core	Character of Rock	Structural Features	Remarks
-40.4-42.4 20 Feet	25"	30	Broken Core Segments	Yellowish, weathered, Sandstone		
-42.4-62.4 15.0 Feet	47"	26	Good Cores and Core Fragments	Same as above	Joints ⊥ to core or making high angle with it.	Strong Rock

CORE RECORD OF BOTTOM DEPOSITS RESTING ON BEDROCK

+16.3'	6"		Fines in Jar.	Fill.		
+9.0'	3"		Fines in Jar.	Sand.		
0.0'	5"		Core in Jar.	Sand.		
-14.5'	3"		Fines in Jar.	Sand.		
-29.4'-31.7'	6"		Fines in Jar.	Sand.		
-38.0'	6"		Fines in Jar.	Sand.		

318

As-built Log of Test Borings sheet is considered an information document only. As such, the State of California registration seal with signature, license number, and registration certificate expiration date will not be required. This drawing is available and presented only for the convenience of any bidder, contractor, or other interested party.

DIST	COUNTY	ROUTE	KILOMETER POST- TOTAL PROJECT	Sheet No.	Total sheets
04	SF ▲	80		61 ▲	65 ▲

YBI TRANSITION STRUCTURES

AS-BUILT LOG OF TEST BORINGS NO. 16

The State of California or its officers or agents shall not be responsible for the accuracy and completeness of electronic copies of this plan sheet.

CU: 04 251 ▲
EA: 0120S1 ▲

BRIDGE NO. 34-0006 L/R

94

LEGEND OF BORING OPERATIONS

LEGEND OF EARTH MATERIALS

CONSISTENCY CLASSIFICATION FOR SOILS

NOTE: Classification of earth material as shown on this sheet is based upon field inspection and is not to be construed to imply mechanical analysis.

ENGINEERING SERVICE CENTER | STRUCTURE FOUNDATIONS

DRAWN BY 9-95
CHECKED BY 11/3/95

FIELD INVESTIGATION BY: H. LUQMAN & T. CROSBY

State of CALIFORNIA DEPARTMENT OF TRANSPORTATION

DIVISION OF STRUCTURES STRUCTURE DESIGN

BRIDGE NO. 33-0025
POST MILE 1.15

SAN FRANCISCO-OAKLAND BAY BRIDGE
EARTHQUAKE RETROFIT PROJECT NO. 2
LOG OF TEST BORINGS 15 OF 17

ORIGINAL SCALE IN INCHES FOR REDUCED PLANS

CU: 04
EA: 043441

DISREGARD PRINTS BEARING EARLIER REVISION DATES

REVISION DATES (PRELIMINARY STAGE ONLY)

SHEET 47 OF 49

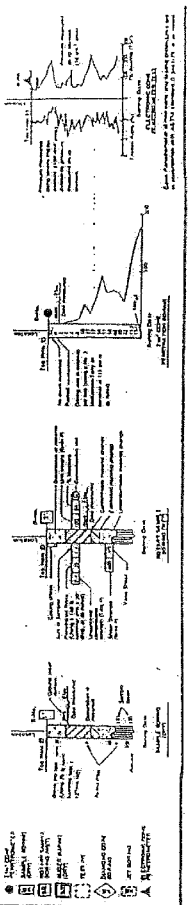

DIST	COUNTY	ROUTE	POST MILES TOTAL PROJECT	SHEET NO.	TOTAL SHEETS
04	Ala	80		118	137

REGISTERED ENGINEERING GEOLOGIST — A. W. FOX — No. 78 — Exp. 6-31-97 — CERTIFIED ENGINEERING GEOLOGIST — STATE OF CALIFORNIA

PLANS APPROVAL DATE

The State of California or its officers or agents shall not be responsible for the accuracy or completeness of electronic copies of this plan sheet.

LOG OF BORING YB4b

SAN FRANCISCO – OAKLAND BAY BRIDGE (PIER YB4)

— RESIDENT ENGINEER'S REPORT —

Depth to Rock Surface: -12.5 HOLE NO YB4 b · Date of Drilling: July 26 to 28, 1933

Nature and thickness of deposits to rock surface:- +9.4 to +5.0 loose sand, +5.0 to -0.3 sand, -0.3 to -12.0 yellow clay, stiff sandy clay, sandy shale.

DRILL CORE RECORD

Length of Drilling	Core Recovered	Per Cent Recovery	Condition of Core	Character of Rock	Structural Features	Remarks

Elev.	
+9.4	Top of Filled Ground
	Loose sand and loam. Artificial fill to an approximate Elev. of +5.0
+5.0	Approximate Elev. of original breach.
	Clean moist sand, fully saturated at high tide.
+2.1	Sample YB4b-1, 123# per cu. ft. Clean brown sand, saturated and of medium coarseness.
-0.3	Gradual change to a stiff yellow sandy clay, increasing in density with depth.
-3.4	Sample YB4b-2, 132# per cu. ft. Stiff, yellow sandy clay.
-5.6	Stiff sandy clay.
-8.5	Very stiff sandy clay
-10.0	Sample YB4b-3, 135# per cu. ft. Soft sandy shale.
-11.1	Very stiff sandy clay.
-12.5	Sample YB4b-4, 133# per cu. ft. Soft sandy rock, part a sandy shale and part a soft sandstone containing hard nodules, gradually changing below Elev. -12.5 to a fairly hard sandstone, seamed and broken. Indications of softer interbedded material. Diamond Drilled from Elev. -12.5 to Elev. -19.0
-18.0	A soft stratum encountered between
-18.6	Elev. -18.1 and Elev. -18.6
-19.0	Bottom of Boring

Location: Sta. 179+18. 35' S of ℄

CONTRACT NO. 04-0A1604

CONTRACT CHANGE ORDER NO. 72

SHEET 262 OF 290

As-built Log of Test Borings sheet is considered an information document only. As such, the State of California registration seal with signature, license number, and registration certificate expiration date will not be required. This drawing is available and presented only for the convenience of any bidder, contractor, or other interested party.

DIST	COUNTY	ROUTE	KILOMETER POST- TOTAL PROJECT	Sheet No.	Total sheets
04	SF ▲	80		62 ▲	65 ▲

YBI TRANSITION STRUCTURES

AS-BUILT LOG OF TEST BORINGS NO. 17

The State of California or its officers or agents shall not be responsible for the accuracy and completeness of electronic copies of this plan sheet.

CU: 04251 ▲ EA: 012051 ▲ BRIDGE NO. 34-0006 L/R

ENGINEERING SERVICE CENTER	STRUCTURE FOUNDATIONS	FIELD INVESTIGATION BY:	State of CALIFORNIA DEPARTMENT OF TRANSPORTATION	DIVISION OF STRUCTURES STRUCTURE DESIGN	BRIDGE NO. 33-0025
DRAWN BY: [illegible] 9-95		H. LIGMAN & T. CROSBY			POST MILE 13.5
CHECKED BY: [illegible]					

ORIGINAL SCALE IN INCHES FOR REDUCED PLANS: 0 1 2 3

CU: 04 EA: 043441

DISREGARD PRINTS BEARING EARLIER REVISION DATES

REVISION DATES (PRELIMINARY STAGE ONLY)

SAN FRANCISCO–OAKLAND BAY BRIDGE
EARTHQUAKE RETROFIT PROJECT NO. 2
LOG OF TEST BORINGS 16 OF 17

SHEET 48 OF 49

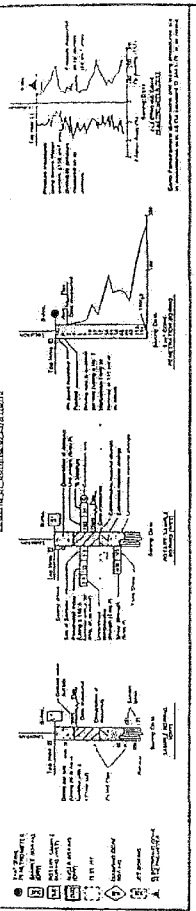

DIST.	COUNTY	ROUTE	POST MILES TOTAL PROJECT	SHEET NO.	TOTAL SHEETS
04	Ala	80		119	137

REGISTERED ENGINEERING GEOLOGIST

PLANS APPROVAL DATE

REGISTERED GEOLOGIST R.W. TOX No. 78 Exp. 6-31-97 CERTIFIED ENGINEERING GEOLOGIST STATE OF CALIFORNIA

The State of California or its officers or agents shall not be responsible for the accuracy or completeness of electronic copies of this plan sheet.

CONTRACT NO. 04-0120R4

CONTRACT CHANGE ORDER NO 73

SHEET 263 OF 280

LOG OF BORING NO. YB4a.

Elev +35.6 Top of excavated ground

Very firm sandy soil composed of medium grained, somewhat cemented brown sand. The grains are soft and may be broken into very fine particles by rubbing between the fingers. Very permeable and much softer when wet.

In natural position the soil may be excavated to a vertical face for a considerable height without sliding or crumbling.

+29.6 Gradual increase in degree of cementation.

Sample YB4a-1, 121 lbs. per cu ft. Samples were somewhat shattered, breaking under the jar of driving the sampler along planes similar to cleavage planes in rock.

+27.6 Gradual change to a soft, friable decomposed sandstone or sandy shale.

+25.7 Sample YB4a-2, 128 lbs. per cu ft. Soft friable decomposed sandstone.

+24.8 Samples badly broken.

+24.4 Sample YB4a-3. Same as above but with occasional hard fragments. Fairly hard but friable sandstone at Elev. +23.1

+23.0 Bedrock

Gradual change to a hard but seamed and broken sandstone with probably some interbedded softer strata.

Diamond Drilled +23.1 to +17.1

+17.0

Location:- Sta. 179+16, 40' N. of ℄.

SAN FRANCISCO-OAKLAND BAY BRIDGE (PIER YB4)
- RESIDENT ENGINEER'S REPORT -
HOLE NO. YB4a.

Depth to Rock Surface: +23.0 Date of Drilling: July 17 to July 25, 33

Nature and Thickness of Deposits to Rock Surface:- +35.6 to +27.8 Firm Sandy soil. +27.6 to +23 shale + decom. sandstn

DRILL CORE RECORD

Length of Drilling	Core Recovered	Per Cent Recovery	Condition of Core	Character of Rock	Structural Features	Remarks

Pier No. YB4-Boring No. YB4a.

As-built Log of Test Borings sheet is considered an information document only. As such, the State of California registration seal with signature, license number, and registration certificate expiration date will not be required. This drawing is available and presented only for the convenience of any bidder, contractor, or other interested party.

DIST	COUNTY	ROUTE	KILOMETER POST- TOTAL PROJECT	Sheet No.	Total sheets
04	SF ▲	80		63 ▲	65 ▲

YBI TRANSITION STRUCTURES

AS-BUILT LOG OF TEST BORINGS NO. 18

The State of California or its officers or agents shall not be responsible for the accuracy and completeness of electronic copies of this plan sheet.

CU: 04251 ▲ EA: 012051 ▲

BRIDGE NO. 34-0006 L/R

LEGEND OF BORING OPERATIONS

LEGEND OF EARTH MATERIALS

COUNTS/BODY CLASSIFICATION FOR SOILS

NOTE: Classification of earth material as shown on the sheet is based upon field inspection and is not to be construed to imply mechanical analysis.

ENGINEERING SERVICE CENTER | STRUCTURE FOUNDATIONS

DRAWN BY: 5-95

CHECKED BY: 1/2/95

FIELD INVESTIGATION BY: M. LUQMAN & T. CROSBY

State of CALIFORNIA DEPARTMENT OF TRANSPORTATION

DIVISION OF STRUCTURES STRUCTURE DESIGN

BRIDGE NO. 33-0025 POST MILE 1.35

SAN FRANCISCO-OAKLAND BAY BRIDGE

EARTHQUAKE RETROFIT PROJECT NO. 2

LOG OF TEST BORINGS 17 OF 17

ORIGINAL SCALE IN INCHES FOR REDUCED PLANS

CU: 04 EA: 043441

DISREGARD PRINTS BEARING EARLIER REVISION DATES

REVISION DATES (PRELIMINARY STAGE ONLY)

SHEET 49 OF 49

CONTRACT NO. 04-012 0K4

CONTRACT CHANGE ORDER NO 73

SHEET 264 OF 289

DIST	COUNTY	ROUTE	POST MILES TOTAL PROJECT	SHEET NO	TOTAL SHEETS
04	SF	80		120	137

REGISTERED ENGINEERING GEOLOGIST

PLANS APPROVAL DATE

R.W. FOX No. 28 Exp. 8-31-97 CERTIFIED ENGINEERING GEOLOGIST STATE OF CALIFORNIA

The State of California or its officers or agents shall not be responsible for the accuracy or completeness of electronic copies of this plan sheet.

FOR PLAN VIEW SEE "LOG OF TEST BORINGS 1 OF 17"

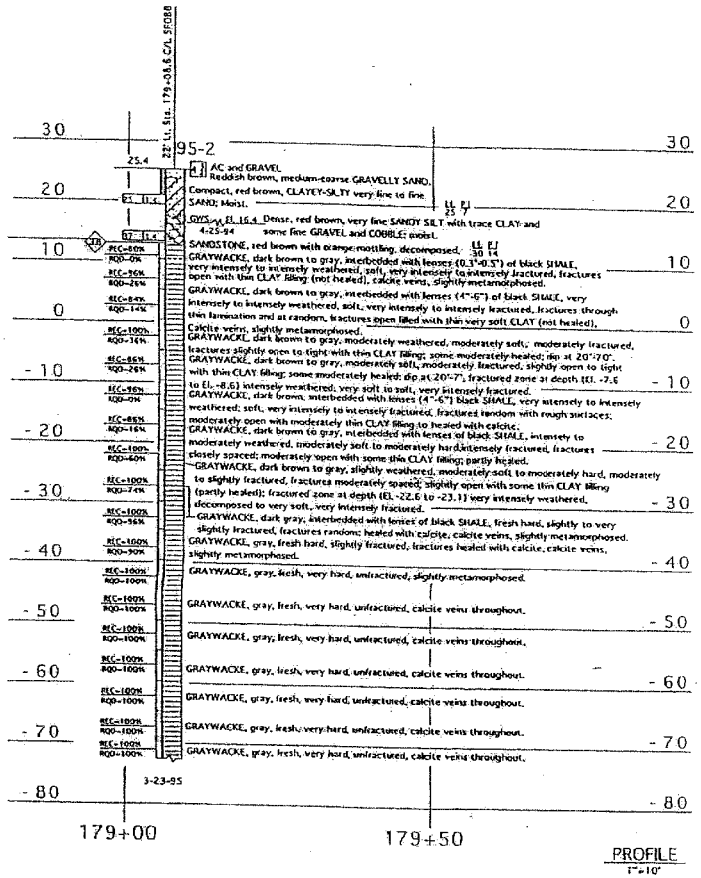

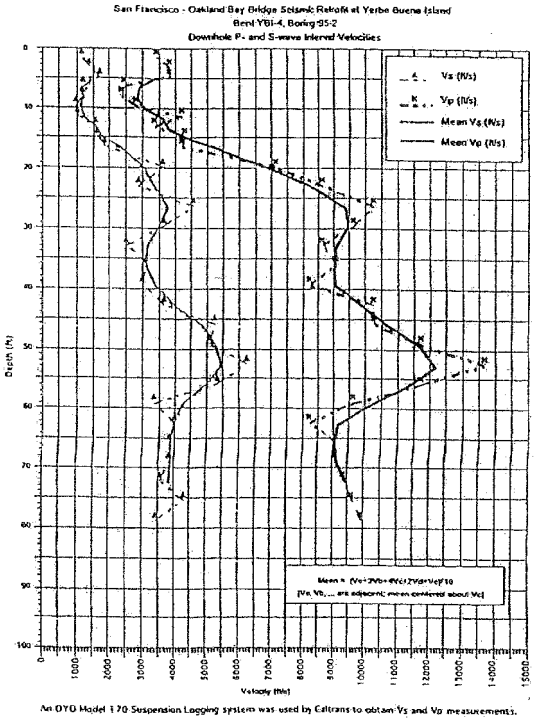

An OYO Model 170 Suspension Logging system was used by Caltrans to obtain Vs and Vp measurements.

As-built Log of Test Borings sheet is considered an information document only. As such, the State of California registration seal with signature, license number, and registration certificate expiration date will not be required. This drawing is available and presented only for the convenience of any bidder, contractor, or other interested party.

DIST	COUNTY	ROUTE	KILOMETER POST- TOTAL PROJECT	Sheet No.	Total sheets
04	SF	80		64	65

YBI TRANSITION STRUCTURES

AS-BUILT LOG OF TEST BORINGS NO. 19

The State of California or its officers or agents shall not be responsible for the accuracy and completeness of electronic copies of this plan sheet.

CU: 04251 EA: 0120S1

BRIDGE NO 34-0006 L/R

ENGINEERING SERVICE CENTER | STRUCTURE FOUNDATIONS

DRAWN BY: Eddie Fong 9/95

CHECKED BY:

FIELD INVESTIGATION BY: M. LUQMAN & T. CROSBY

State of CALIFORNIA DEPARTMENT OF TRANSPORTATION

DIVISION OF STRUCTURES STRUCTURE DESIGN

BRIDGE NO. 33-0025 POST MILE 1.15

SAN FRANCISCO-OAKLAND BAY BRIDGE

EARTHQUAKE RETROFIT PROJECT NO. 2

LOG OF TEST BORINGS 3 OF 17

ORIGINAL SCALE IN INCHES FOR REDUCED PLANS — 0 1 2

CU: 04 EA: 043441

DISREGARD PRIOR BEARING EARLIER REVISION DATES

REVISION DATES (PRELIMINARY STAGE ONLY)

SHEET 35 OF 49

CONSISTENCY CLASSIFICATION FOR SOILS

According to the Standard Penetration Test

Penetration Index (Blows / Ft)	Granular	Cohesive
0-4	Very Loose	Very Soft
5-9	Loose	Soft
10-19	Slightly compact	Stiff
20-34	Compact	Very Stiff
35-69	Dense	Hard
>70	Very Dense	Very Hard

NOTE: Classification of earth material as shown on this sheet is based upon field inspection and is not to be construed to imply mechanical analysis.

LEGEND OF EARTH MATERIALS

GRAVEL, SAND, SILT, CLAY, SANDY CLAY or CLAYEY SAND, SANDY SILT or SILTY SAND, SILTY CLAY, CLAYEY SILT, PEAT and/or ORGANIC MATTER, FILL MATERIAL, IGNEOUS ROCK, SEDIMENTARY ROCK, METAMORPHIC ROCK

LEGEND OF BORING OPERATIONS

FOR PLAN VIEW, SEE "LOG OF TEST BORINGS 1 OF 17"

47' Lt. Sta. 182+59 C/L SFOBB

95-5

69.2

A C and GRAVEL

Very loose, brown, SILTY fine SAND, moist (Fill).
Slightly compact, gray, GRAVEL, moist.
Very dense, gray, decomposed, GRAYWACKE, dry.

Interbedded GRAYWACKE and SHALE. GRAYWACKE: gray, intensely to moderately weathered, moderately hard to hard, moderately fractured, fractures open and random. SHALE: black, intensely to moderately weathered, moderately hard, intensely fractured.

Interbedded GRAYWACKE and SHALE (4"). GRAYWACKE: gray, slightly moderately weathered, hard, moderately fractured. SHALE: black, moderately to intensely weathered, moderately hard, intensely fractured, fractured open.

GRAYWACKE: gray, interbedded with lenses (2"-4") of black SHALE, moderately to slightly weathered, moderately hard, moderately fractured, fractures open, calcite veins.

GRAYWACKE: gray, interbedded with lenses (~3") of black SHALE, slightly weathered to fresh, hard to very hard, moderately to slightly fractured, fractures random; close to slightly open at dip >5°, calcite veins, slightly metamorphosed.

GRAYWACKE: gray, interbedded with lenses (3") of black SHALE, moderately to slightly weathered, hard to very hard, moderately to slightly fractured, fractures closed, calcite veins, slightly metamorphosed.

GRAYWACKE: gray, interbedded with lenses (2"-8") of black SHALE, moderately to slightly weathered, hard to very hard, slightly fractured, fractures slightly open; random; with rough surfaces, calcite veins, slightly metamorphosed.

GRAYWACKE: gray, interbedded with lenses (8") of black SHALE, slightly weathered to fresh, very hard, slightly fracture, fractures random, rough and closed, mechanical breaks through foliation, calcite veins, slightly metamorphosed.

GRAYWACKE: gray, interbedded with lenses (6") of black SHALE, very slightly weathered to fresh, very hard, slightly fractured, fractures through foliations and bedding contact, fractures random; rough; slightly open to close.

GRAYWACKE: gray, interbedded with lenses of black SHALE, very slightly weathered to fresh, very hard, slightly fractured, mechanical fracture random; slightly open to close; calcite veins, slightly metamorphosed

GRAYWACKE: gray, with black SHALE inclusion, fresh, very hard, unfractured, calcite veins.

Interbedded GRAYWACKE and SHALE, GRAYWACKE: gray, fresh, very hard, slightly fractured, fractures tightly closed; calcite veins, slightly metamorphosed. SHALE: black, fresh, hard, moderately fractured through thinly laminated, layers,

Interbedded GRAYWACKE and SHALE, GRAYWACKE: gray, fresh, very hard, very slightly fractured, fractures at dip 30°-45°, smooth to rough; calcite veins; slightly metamorphosed; SHALE: black, fresh, hard, slightly fractured through thin laminations at dip 0°-5°.

GRAYWACKE: gray, fresh, very hard; unfractured, mechanical breaks through veins; calcite veins, slightly metamorphosed.

GRAYWACKE: gray, interbedded with black SHALE, fresh, very hard, very slightly fractured, fractures through shaley laminations at dip 30°, calcite veins.

GRAYWACKE: gray, interbedded with lenses of SHALE, fresh, very hard, slightly fractured, mechanical breaks through foliations in smooth to rough surface at dip 30°, calcite veins, slightly metamorphosed.

GRAYWACKE: gray, fresh, very hard, slightly to very slightly fractured, fracture: healed with calcite, fractures through foliations in smooth to rough surfaces at dip 30°-35°, calcite veins, slightly metamorphosed.

GRAYWACKE: gray, fresh, very hard, unfractured, mechanical breaks through calcite veins, slightly metamorphosed.

GRAYWACKE: gray, fresh, hard to very hard, very slightly fractured, fractures healed with calcite, mechanical breaks through foliations in smooth to rough surfaces at dip 40°, calcite veins, slightly metamorphosed.

Interbedded GRAYWACKE and SHALE, GRAYWACKE: gray, fresh, very slightly fractured at random, calcite veins, slightly foliated. SHALE: black, fresh, hard, intensely fractured, thinly laminated, calcite veins

GRAYWACKE: gray, interbedded with lenses of SHALE, fresh, moderately hard to hard, fractured through SHALE lenses, fractures open to slightly closed at random; fractures dip at 30°-40°, calcite veins, slightly metamorphosed.

SHALE, black, interbedded with lens of GRAYWACKE, fresh, moderately hard to hard, moderately fractured at dip 45°-65°, calcite veins, slightly metamorphosed.

GRAYWACKE, gray, interbedded with lenses (3") of black SHALE, fresh, hard to very hard, moderately to slightly fractured, fractures open to slightly open at dip 40°-65°, calcite vein, slightly metamorphosed.

GRAYWACKE, gray, interbedded with lenses of black SHALE, fresh, very hard, moderately fractured, fractures open to slightly open at dip 40°-65°, calcite vein, slightly metamorphosed.

GRAYWACKE, gray, interbedded with lenses of black SHALE, fresh, very hard, moderately fractured, fractures open to closed, calcite veins, slightly metamorphosed.

GRAYWACKE, gray, slightly weathered to fresh, hard to very hard, moderately fractured, fractures through foliation at random; fractures smooth to rough; tightly closed to slightly open, calcite veins, slightly metamorphosed.

GRAYWACKE, gray wake, moderately weathered, moderately hard to hard, moderately fractured, fractures through veins; fractures open to slightly close; smooth to rough at dip 10°-50°, calcite veins, slightly metamorphosed.

GRAYWACKE, gray with lenses of black SHALE, fresh, hard, slightly fractured, fractures open to healed with calcite; dip at 10°-45°, calcite veins, slightly foliated.

GRAYWACKE, gray, fresh, very hard, unfractured, random mechanical breaks, calcite veins, slightly metamorphosed.

GRAYWACKE, gray, fresh, very hard, unfractured, random mechanical breaks, calcite veins, very slightly metamorphosed.

GRAYWACKE, gray with lenses of black SHALE, fresh, very hard, very slightly fractured, fractures through foliation/bedding; very slightly open to healed with calcite; dip at 30°-45°, calcite veins, slightly metamorphosed.

GRAYWACKE, gray, fresh, very hard, moderately to slightly fractured, fractures through foliation/bedding at random; fractures slightly open; dip at 30°-50°, calcite veins, slightly metamorphosed.

GRAYWACKE, gray, fresh, very hard, unfractured, mechanical breaks through foliation/bedding @ dip 0°-30°, calcite vein, slightly metamorphosed.

GRAYWACKE, gray, fresh, very hard, moderately fractured, fractures very slightly open; mechanical breaks through foliation/bedding at dip 15°-50°, calcite vein, slightly metamorphosed.

GRAYWACKE, gray with lenses of black SHALE, fresh, hard, slightly fractured, fractures tight and healed with calcite; mechanical breaks through foliation/bedding, calcite veins, slightly foliated.

Interbedded GRAYWACKE and SHALE, GRAYWACKE: gray, slightly weathered, moderately hard, intensely fractured, calcite veins, slightly metamorphosed. SHALE: black, moderately weathered, soft to moderately hard, intensely fractured, calcite.

Interbedded GRAYWACKE and SHALE, GRAYWACKE: gray, slightly weathered, moderately hard, intensely fractured, calcite veins, slightly metamorphosed. SHALE: black, moderately weathered, soft to moderately hard, intensely fractured, calcite.

GRAYWACKE, gray, slightly weathered, soft to hard, intensely fractured, sheared fractured zones healed with calcite; mechanical breaks random, calcite veins, slightly metamorphosed.

GRAYWACKE, gray, interbedded with lenses of black SHALE, slightly weathered, soft to moderately soft, intensely fractured, fractures sheared zone healed with calcite, calcite veins, slightly metamorphosed.

5-4-95

Core recovery (top to bottom): REC=100% RQD=59%; REC=100% RQD=73%; REC=100% RQD=85%; REC=100% RQD=83%; REC=100% RQD=75%; REC=100% RQD=55%; REC=100% RQD=32%; REC=100% RQD=90%; REC=100% RQD=100%; REC=100% RQD=100%; REC=100% RQD=100%; REC=100% RQD=100%; REC=100% RQD=98%; REC=100% RQD=87%; REC=100% RQD=100%; REC=100% RQD=100%; REC=100% RQD=94%; REC=100% RQD=89%; REC=100% RQD=82%; REC=100% RQD=100%; REC=100% RQD=98%; REC=100% RQD=81%; REC=100% RQD=90%; REC=100% RQD=100%; REC=100% RQD=98%; REC=100% RQD=68%; REC=100% RQD=100%; REC=100% RQD=100%; REC=100% RQD=100%; REC=100% RQD=87%; REC=100% RQD=100%; REC=100% RQD=100%; REC=100% RQD=93%; REC=100% RQD=45%; REC=100% RQD=98%; REC=100% RQD=100%; REC=100% RQD=90%

Elevations: 70, 60, 50, 40, 30, 20, 10, 0, -10, -20, -30, -40, -50, -60, -70, -80, -90, -100, -110, -120, -130

182+50

San Francisco - Oakland Bay Bridge Seismic Retrofit at Yerba Buena Island
Pier E1, Boring 95-5
Downhole P- and S-wave Interval Velocities

An OYO Model 170 Suspension Logging System was used by Caltrans to obtain Vs and Vp measurements.

PROFILE
1" = 10'

As-built Log of Test Borings sheet is considered an information document only. As such, the State of California registration seal with signature, license number, and registration certificate expiration date will not be required. This drawing is available and provided only for the convenience of any bidder, contractor, or other interested party.

DIST	COUNTY	ROUTE	KILOMETER POST TOTAL PROJECT	Sheet No.	Total sheets
04	SF	80		65	65

YBI TRANSITION STRUCTURES
AS-BUILT LOG OF TEST BORINGS NO. 20

The State of California or its officers or agents shall not be responsible for the accuracy and completeness of electronic copies of this plan sheet.

CU: 04 231 — EA: 012051 — BRIDGE NO. 34-0006 L/R

CONTRACT NO. 04-012024

CONTRACT CHANGE ORDER NO. 73

SHEET 265 OF 280

DIST	COUNTY	ROUTE	POST MILES TOTAL PROJECT	SHEET NO	TOTAL SHEETS
04	Ala	80		121	137

REGISTERED ENGINEERING GEOLOGIST

PLANS APPROVAL DATE

REGISTERED GEOLOGIST — R.W. FOX — No. 78 — Exp. 8-31-97 — CERTIFIED ENGINEERING GEOLOGIST — STATE OF CALIFORNIA

The State of California or its officers or agents shall not be responsible for the accuracy or completeness of electronic copies of this plan sheet.

ENGINEERING SERVICE CENTER
STRUCTURE FOUNDATIONS

DRAWN BY: Jo. Wai — 9-95
CHECKED BY: — 1/2/95

FIELD INVESTIGATION BY: M. LUQMAN & T. CROSBY

State of CALIFORNIA
DEPARTMENT OF TRANSPORTATION

DIVISION OF STRUCTURES
STRUCTURE DESIGN

CU: 04
EA: 043441

BRIDGE NO. 33-0025
POST MILE: 0.25

SAN FRANCISCO-OAKLAND BAY BRIDGE
EARTHQUAKE RETROFIT PROJECT NO. 2
LOG OF TEST BORINGS 6 OF 17

SHEET 38 OF 45

DISREGARD PRINTS BEARING EARLIER REVISION DATES

REVISION DATES (PRELIMINARY STAGE ONLY)

ORIGINAL SCALE IN INCHES FOR REDUCED PLANS

DIST.	COUNTY	ROUTE	KILOMETER POST TOTAL PROJECT	SHEET NO.	TOTAL SHEETS
04	SF	80		122	137

Caltrans Metric

REGISTERED ENGINEER - CIVIL

PLANS APPROVAL DATE

The State of California or its officers or agents shall not be responsible for the accuracy or completeness of electronic copies of this plan sheet.

REGISTERED PROFESSIONAL ENGINEER A.L. ELY No. 18880 Exp. 6-30-07 CIVIL STATE OF CALIFORNIA

T.Y. LIN / MOFFATT & NICHOL
TWO HARRISON STREET
SAN FRANCISCO, CA 94105

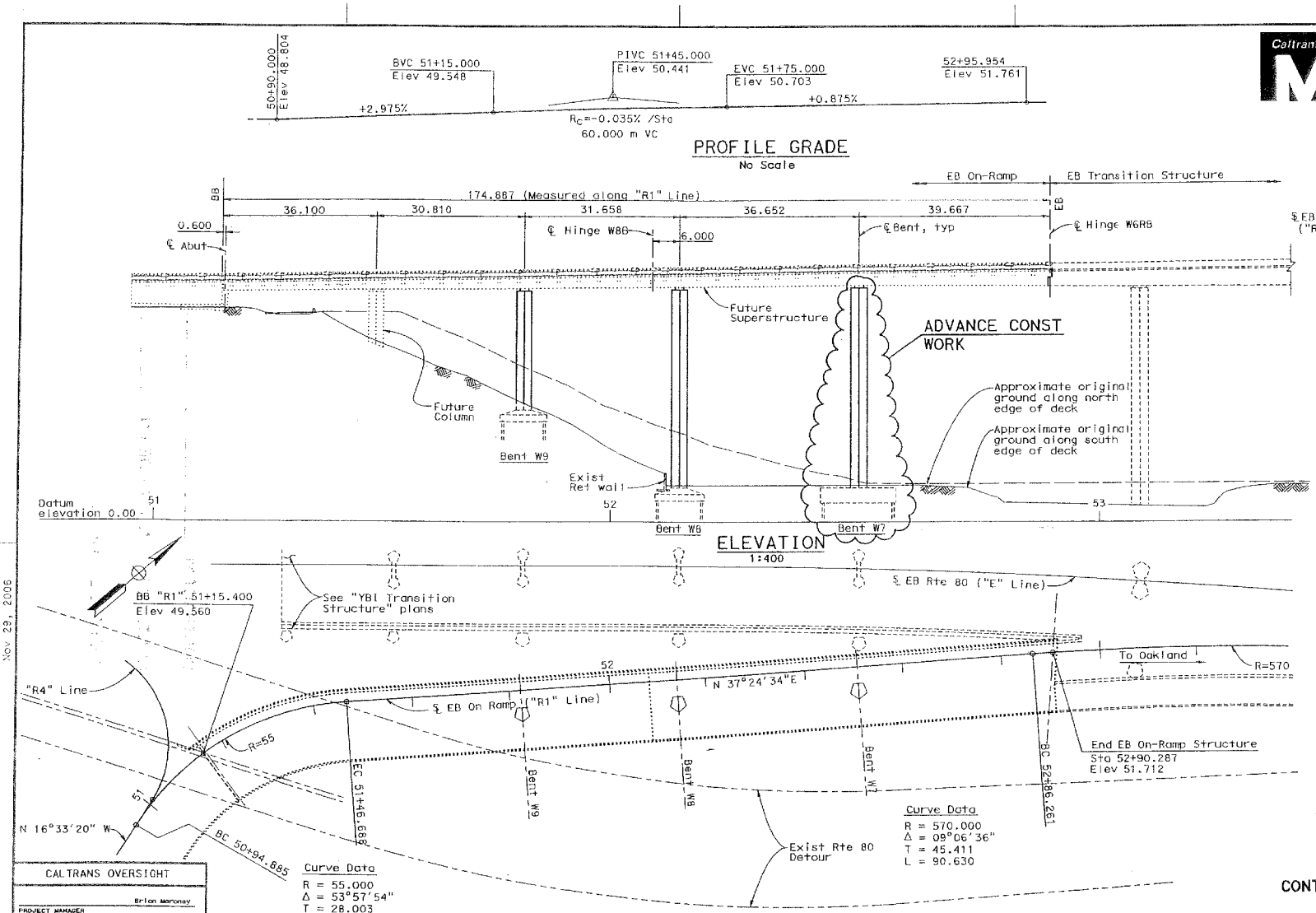

Note:
For general notes, index to bridge plans, pile data table and approximate bridge quantities see "Foundation Plan" sheet.

ALL DIMENSIONS ARE IN METERS UNLESS OTHERWISE SHOWN

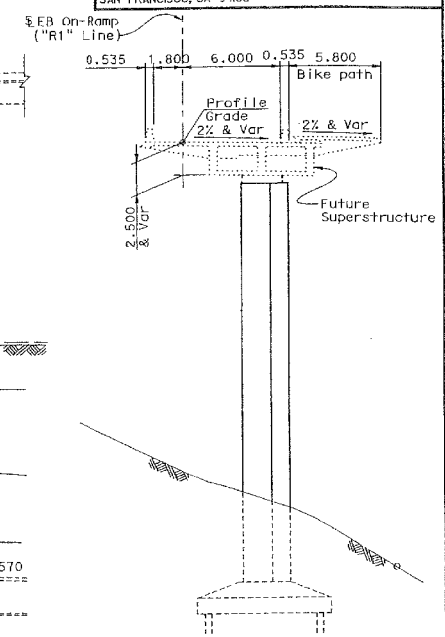

TYPICAL SECTION
(Bent W9 Shown)
1:150

Note: Work shown in addition to that designated as "Advance Const Work" is for informational purposes only.

SUPPLEMENTAL SHEET

CONTRACT CHANGE ORDER NO. 73
SHEET 266 OF 280

CALTRANS OVERSIGHT

PROJECT MANAGER	Brian Maroney
CONTRACT MANAGER	Ade Akinsanya
SPECIFICATION MANAGER	Mike Whiteside
SPECIFICATION OVERSIGHT	Steve Margaris
DESIGN OVERSIGHT	John Mook, Bernard Chan, Juan F. Carpio
SIGN OFF DATE	

Rev. Date: 5-15-06

	BY	CHECKED	LOAD FACTOR DESIGN	LIVE LOADING: HS20-44 AND ALTERNATIVE AND PERMIT DESIGN LOAD	
DESIGN	Chou	Jain			
DETAILS	Van Ryn	Jain	LAYOUT	Joyce	Jain
QUANTITIES	Chou	Liao	SPECIFICATIONS	J.Ely	PLANS AND SPECS COMPARED Jain

PREPARED FOR THE STATE OF CALIFORNIA DEPARTMENT OF TRANSPORTATION

Jal Birdy
PROJECT ENGINEER

BRIDGE NO. 34-0006 R
KILOMETER POST 12.8

SAN FRANCISCO OAKLAND BAY BRIDGE
EAST SPAN SEISMIC SAFETY PROJECT

YBI EB ON-RAMP STRUCTURE (INITIAL)

ADVANCE CONST PACKAGE NO. 1R2

GENERAL PLAN

ORIGINAL SCALE IN MILLIMETERS FOR REDUCED PLANS 0 10 20 30 40 50 60 70 80 90 100

CU 04251
EA 0120S1

DISREGARD PRINTS BEARING EARLIER REVISION DATES

REVISION DATES (PRELIMINARY STAGE ONLY) 11/4/06 11/10/06 11/29/06 3/30/06 5/30/06 7/30/06 9/30/06 10/30/06 11/30/06

SHEET 1 OF 15

FILE => K:\4141-06\CADD\TS\Final Const\Adv Const Pkg 1R2\EB Ramp included\fogp0.dgn

USERNAME => fsemson DATE PLOTTED => 11/29/2006 TIME PLOTTED => 3:27:31 PM

Nov 29, 2006

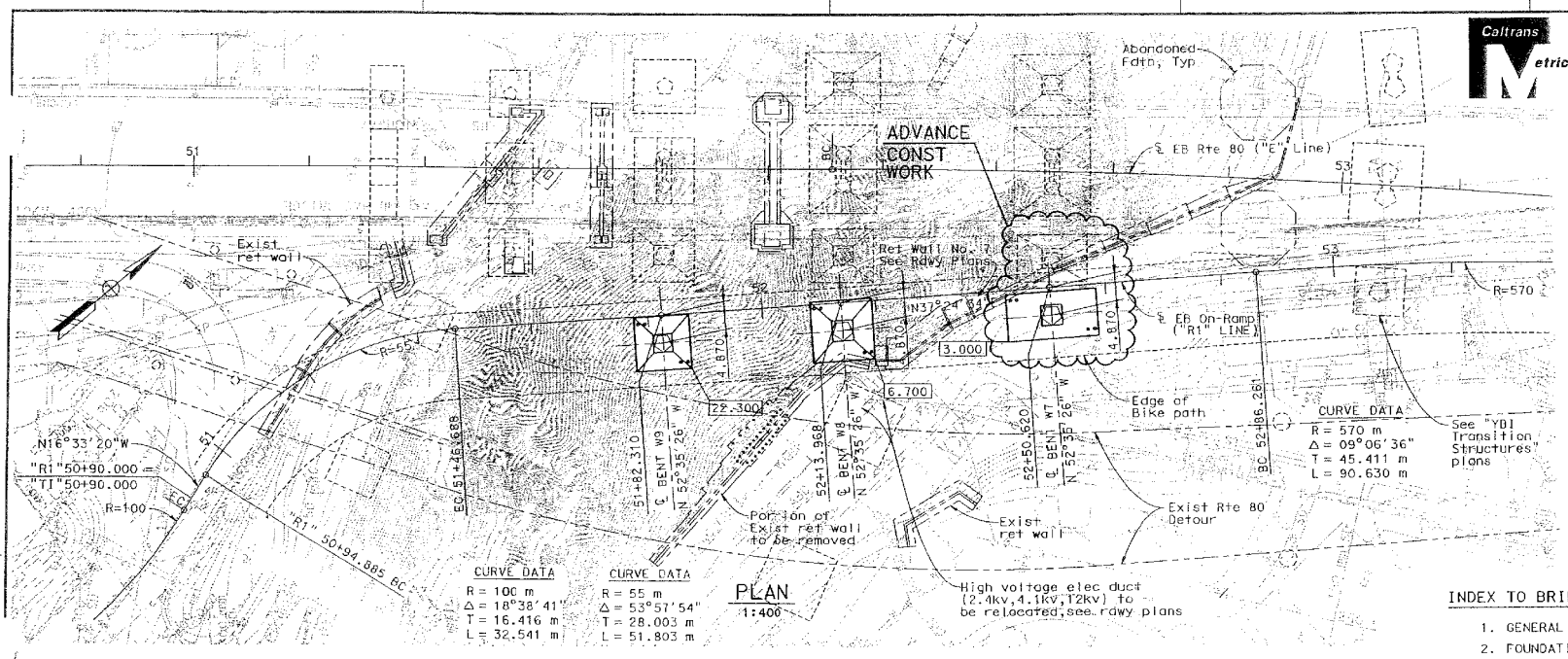

DIST.	COUNTY	ROUTE	KILOMETER POST TOTAL PROJECT	SHEET NO.	TOTAL SHEETS
04	SF	80		123	137

REGISTERED ENGINEER - CIVIL

PLANS APPROVAL DATE

The State of California or its officers or agents shall not be responsible for the accuracy or completeness of electronic copies of this plan sheet.

A.L. ELY No. 18880 Exp. 6-30-07 CIVIL STATE OF CALIFORNIA

T.Y. LIN / MOFFATT & NICHOL
TWO HARRISON STREET
SAN FRANCISCO, CA 94105

Notes:

1. For limits of payment for structure excavation and backfill see A62C
2. Hazardous materials are expected to be encountered in the upper 300 mm of existing soil at Bent W8 and in the upper 600 mm of existing soil at Bent W7.
3. Utility locations shown are approximate, See rdwy plans for utility relocations and abandonments.

LEGEND

- ○ Indicates pile (All piles not shown)
- Denotes bottom of footing elevation
- Denotes existing structure

INDEX TO BRIDGE PLANS

1. GENERAL PLAN
2. FOUNDATION PLAN
3. BENT W7 DETAILS NO.1
4. BENT W7 DETAILS NO.2
5-10. LOG OF TEST BORINGS NO. 1 TO NO. 6
11-15. "AS BUILT" LOG OF TEST BORINGS NO. 1 TO NO. 5

APPLICABLE STANDARD PLANS (DATED JULY 1999)

A10A	ABBREVIATIONS
A10B	SYMBOLS
A62B	LIMITS OF PAYMENT FOR EXCAVATION AND BACKFILL - BRIDGE SURCHARGE AND WALL
A62C	LIMITS OF PAYMENT FOR EXCAVATION AND BACKFILL - BRIDGE
B0-1	BRIDGE DETAILS
B3-9	RETAINING WALL DETAILS NO.2
B7-6	DECK DRAINS TYPES D-1 AND D-2

APPROXIMATE BRIDGE QUANTITIES

STRUCTURE EXCAVATION (BRIDGE)	580 M3
STRUCTURE EXCAVATION (TYPE H)	90 M3
STRUCTURE BACKFILL (BRIDGE)	260 M3
FURNISH STEEL PILING (HP360 X 132)	1103 M
DRIVE STEEL PILE (HP360 X 132)	91 EA
STRUCTURAL CONCRETE, BRIDGE FOOTING	400 M3
STRUCTURAL CONCRETE, BRIDGE	320 M3
BAR REINFORCING STEEL (BRIDGE)	90,170 KG

GENERAL NOTES

Load Factor Design

Design: Caltrans Design Specifications - April 2000 (LFD)
(1996 AASHTO with interims and revisions by Caltrans)
Dead Load: Includes 1675 N/m2 for future wearing surface on roadbed
Live Load: HS20-44 and alternative and permit design load
Bike Path Live Load: 4000 N/m2

Seismic Loading: Refer to project specific seismic design criteria for San Francisco Oakland Bay Bridge. East Span Seismic Safety Project Dated 01-08-00. See "Site Specific Response Spectra"

Reinforced Concrete: Fy = 420 MPa
F'c = 25 MPa
N = 8

PILE DATA							
LOCATION	DESIGN LOADING	NOMINAL RESISTANCE		DESIGN TIP ELEVATION			SPECIFIED TIP ELEVATION
		COMPRESSION	TENSION	(1)	(2)	(3)	
		PILE TYPE HP 360 x 132					
BENT W7	720 kN	1440 kN	720 kN	-9.0	-5.5	-1.0	-9.0

Design tip elevation is controlled by the following demands:
(1) Compression, (2) Tension, (3) Lateral

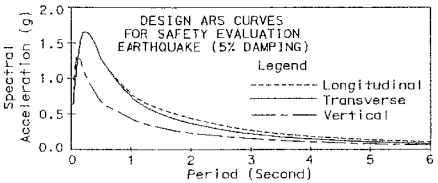

SITE SPECIFIC RESPONSE SPECTRA

Note: Work shown in addition to that designated as "Advance Const Work" is for informational purposes only.

ALL DIMENSIONS ARE IN METERS UNLESS OTHERWISE SHOWN

SUPPLEMENTAL SHEET
CONTRACT NO. 04-0K0R04
CONTRACT CHANGE ORDER NO. 13
SHEET 267 OF 286

SAN FRANCISCO OAKLAND BAY BRIDGE
EAST SPAN SEISMIC SAFETY PROJECT

YBI EB ON-RAMP STRUCTURE (INITIAL)

ADVANCE CONST PACKAGE NO. 1R2

FOUNDATION PLAN

DESIGN OVERSIGHT: M. Kikkawa, Francisco Cunto, Ahn Mook, Bernard Chan, Juan F. Carpio
SIGN OFF DATE
Rev. Date: 5-16-98

SCALE: | VERT. DATUM NGVD 29 | HORZ. DATUM NAD 83
PHOTOGRAMMETRY AS OF: | ALIGNMENT TIES
SURVEYED BY | DRAFTED BY
FIELD CHECKED BY | CHECKED BY

DESIGN BY Chou | CHECKED Jain
DETAILS BY Van Ryn | CHECKED Jain
QUANTITIES BY Chou | CHECKED Liao

PREPARED FOR THE STATE OF CALIFORNIA DEPARTMENT OF TRANSPORTATION

Jal Birdy
PROJECT ENGINEER

BRIDGE NO. 34-0006 R
KILOMETER POST 12.8

CU 04251
EA 0120S1

ORIGINAL SCALE IN MILLIMETERS FOR REDUCED PLANS 0 10 20 30 40 50 60 70 80 90 100

DISREGARD PRINTS BEARING EARLIER REVISION DATES

REVISION DATES (PRELIMINARY STAGE ONLY): 11/14/06 | 11/27/06 | 11/29/06 | 12/4/06 | 12/20/06 | 1/2/07 | 1/9/07 | 10/19/07 | 11/20/07

SHEET 2 OF 15

FILE => K:\4141-06\CADD\TS\Final Const\Adv Const Pkg 1R2\EB Ramp Included\fcfnp.dgn

USERNAME => Yeannon DATE PLOTTED => 11/29/2006 TIME PLOTTED => 3:12:45 PM

Nov. 29, 2006

GEOTECHNICAL/PROFESSIONAL APPROVAL DATE

DIST.	COUNTY	ROUTE	KILOMETER POST TOTAL PROJECT	SHEET NO.	TOTAL SHEETS
04	SF	80		124	137

Caltrans Metric

REGISTERED ENGINEER - CIVIL

PLANS APPROVAL DATE

The State of California or its officers or agents shall not be responsible for the accuracy or completeness of electronic copies of this plan sheet.

REGISTERED PROFESSIONAL ENGINEER A.L. ELY No. 18860 Exp. 6-30-07 CIVIL STATE OF CALIFORNIA

T.Y. LIN / MOFFATT & NICHOL
TWO HARRISON STREET
SAN FRANCISCO, CA 94105

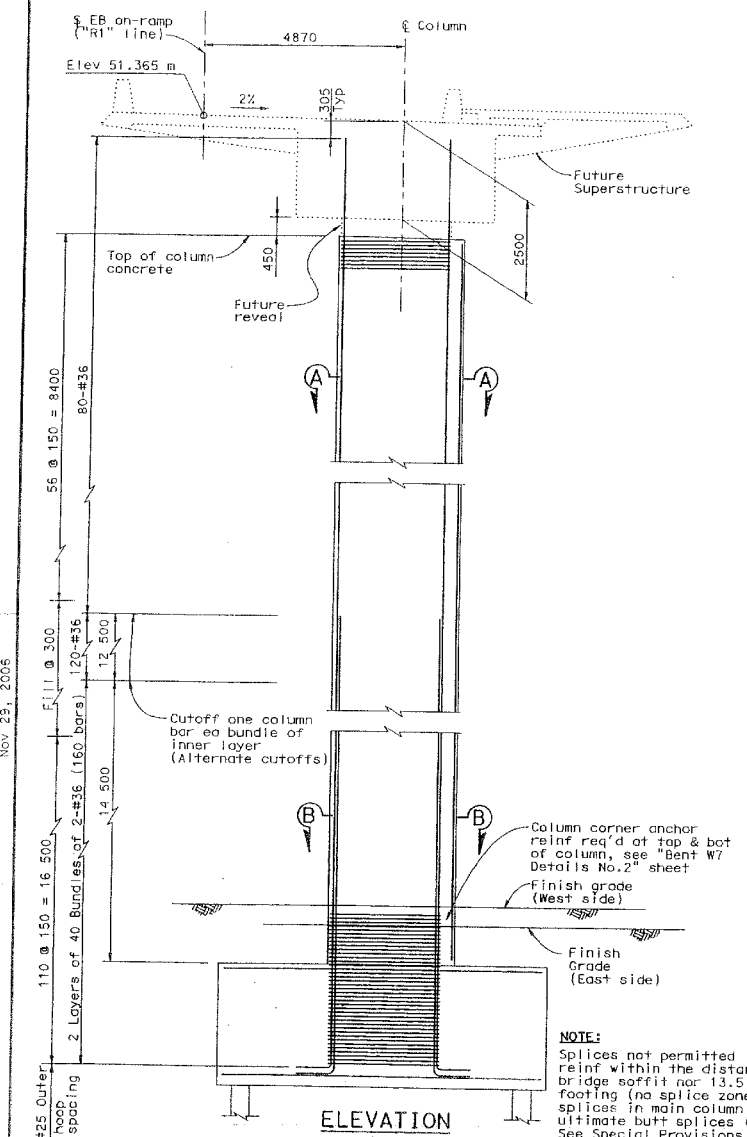

ELEVATION
1:60

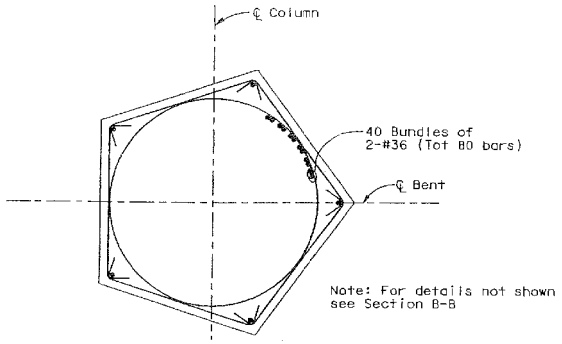

SECTION A-A
1:30

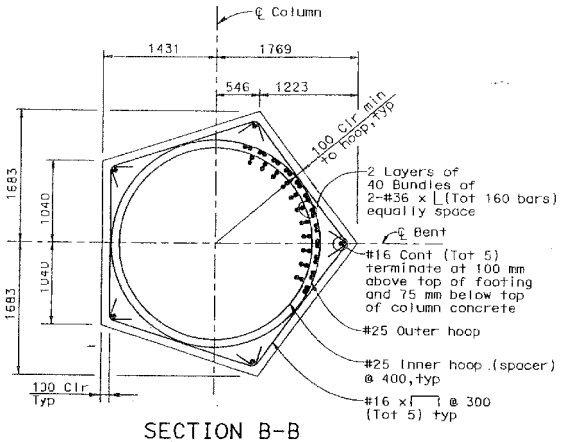

SECTION B-B
1:30

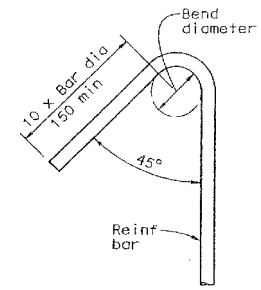

SEISMIC HOOK
No Scale

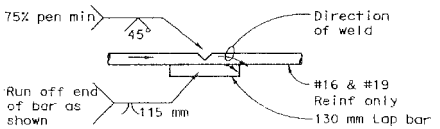

1. Butt weld to be made first
2. Butt weld to be made in flat or horizontal position
3. Lap bar to be centered on splice
4. Flare weld to be made in direction shown
5. Lap bar equal size to spiral bar

VEE GROOVE WELDED SPLICE

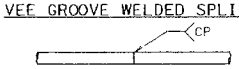

Individual hoops, made continuous with 100% penetration welds, may be substituted for spirals, Hoops shall be same size, spacing, and material as spiral

BUTT WELDED CONTINUOUS HOOP OR SPIRAL

Note: All column spiral and hoop splices shall be ultimate butt splices, see Special Provisions.

COLUMN SPIRAL AND HOOP SPLICE DETAILS
No Scale

SUPPLEMENTAL SHEET

CONTRACT CHANGE ORDER NO. 13
SHEET 248 OF 280

NOTE:
Splices not permitted in main column reinf within the distance of 6 m below bridge soffit nor 13.5 m above top of footing (no splice zones). At other areas splices in main column reinf shall be ultimate butt splices (staggered) See Special Provisions.

ALL DIMENSIONS ARE IN MILLIMETERS UNLESS OTHERWISE SHOWN

SAN FRANCISCO OAKLAND BAY BRIDGE
EAST SPAN SEISMIC SAFETY PROJECT

YBI EB ON-RAMP STRUCTURE (INITIAL)

ADVANCE CONST PACKAGE NO. 1R2

BENT W7 DETAILS NO.1

DESIGN OVERSIGHT
JOHN MOOK, BERNARD CHAN, JUAN F. CARPIO

SIGN OFF DATE

Rev. Date: 5-18-96

	BY	CHECKED
DESIGN	Chou	Atiqullah
DETAILS	van Ryn/Zucchi/Mci	Chou
QUANTITIES	Chou	Liao

PREPARED FOR THE STATE OF CALIFORNIA DEPARTMENT OF TRANSPORTATION

Jal Birdy
PROJECT ENGINEER

BRIDGE NO. 34-0006 R
KILOMETER POST 12.8

ORIGINAL SCALE IN MILLIMETERS FOR REDUCED PLANS 0 10 20 30 40 50 60 70 80 90 100

CU 04251
EA 0120S1

DISREGARD PRINTS BEARING EARLIER REVISION DATES

REVISION DATES (PRELIMINARY STAGE ONLY) 11/2/06 11/2/06 11/29/06 3/28/06 3/30/06 2/28/06 7/2/06 10/2/06 10/29/06

SHEET 3 OF 15

FILE => k:\4141-06\CA3D\TS\Final Const\Adv Const Pkg 1R2\EB Ramp included\fsbnt07aet.dgn

USERNAME => fsamson DATE PLOTTED => 11/29/2006 TIME PLOTTED => 3:27:57 PM

Nov 29, 2006

DIST.	COUNTY	ROUTE	KILOMETER POST TOTAL PROJECT	SHEET NO.	TOTAL SHEETS
04	SF	80		125	137

Caltrans Metric

REGISTERED ENGINEER - CIVIL

PLANS APPROVAL DATE

The State of California or its officers or agents shall not be responsible for the accuracy or completeness of electronic copies of this plan sheet.

REGISTERED PROFESSIONAL ENGINEER A.L. ELY No. 18880 Exp. 6-30-07 CIVIL STATE OF CALIFORNIA

T.Y. LIN / MOFFATT & NICHOL
TWO HARRISON STREET
SAN FRANCISCO, CA 94105

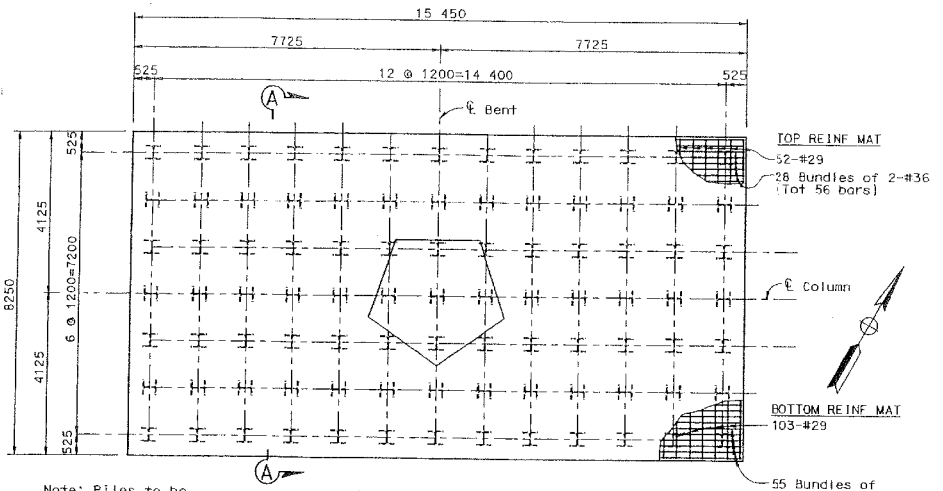

Note: Piles to be oriented as shown

FOOTING PLAN
(Total 91 piles)
1:60

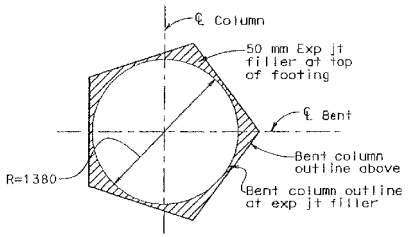

SECTION B-B
No Scale

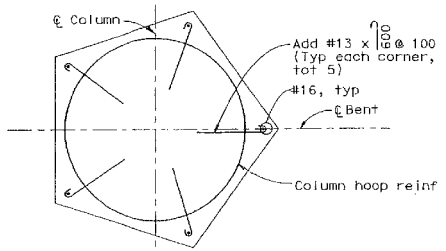

DETAIL D - COLUMN CORNER ANCHOR REINFORCEMENT
(Column corner anchor reinf to be provided in regions within 3000 mm of bridge soffit or top of footing)
No Scale

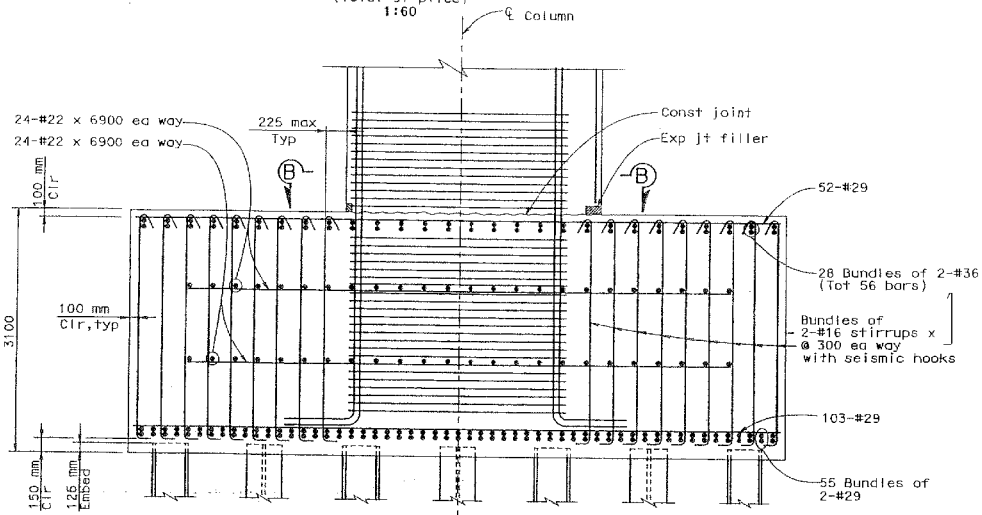

SECTION A-A
1:30

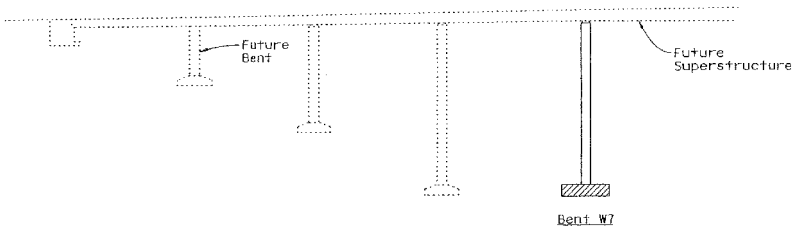

LEGEND

- Structural concrete, bridge (f'c=25 MPa at 28 days)
- Structural concrete, bridge footing (f'c=25 MPa at 28 days)

CONCRETE STRENGTH & TYPE LIMITS
No Scale

SUPPLEMENTAL SHEET
CONTRACT NO. 04-0120R4
CONTRACT CHANGE ORDER NO. 73
SHEET 26 OF 260

ALL DIMENSIONS ARE IN MILLIMETERS UNLESS OTHERWISE SHOWN

SAN FRANCISCO OAKLAND BAY BRIDGE
EAST SPAN SEISMIC SAFETY PROJECT

YBI EB ON-RAMP STRUCTURE (INITIAL)

ADVANCE CONST PACKAGE NO. 1R2

BENT W7 DETAILS NO.2

DESIGN OVERSIGHT
M. MOOK, BERNARD CHAN, JUAN F. CARPIO

SIGN OFF DATE

Rev. Date: 5-18-98

DESIGN	BY Chou	CHECKED Atiqullah	
DETAILS	BY Van Ryn/Zucchi/Maj	CHECKED Chou	
QUANTITIES	BY Chou	CHECKED Lido	

PREPARED FOR THE STATE OF CALIFORNIA DEPARTMENT OF TRANSPORTATION

Jal Birdy
PROJECT ENGINEER

BRIDGE NO. 34-0006 R
KILOMETER POST 12.8

ORIGINAL SCALE IN MILLIMETERS FOR REDUCED PLANS 0 10 20 30 40 50 60 70 80 90 100

CU 04251
EA 0120S1

DISREGARD PRINTS BEARING EARLIER REVISION DATES

REVISION DATES (PRELIMINARY STAGE ONLY) 11/20/06 11/20/06 11/20/06 11/20/06 5/18/06 5/18/06 2/4/06 1/4/06 10/4/06 10/4/06

SHEET 4 OF 15

FILE => k:\4141-06\CADD\TS\Final Const\Adv Const Pkg 1R2\EB Ramp Included\Febnt08det.dgn

USERNAME => fsamson DATE PLOTTED => 11/29/2006 TIME PLOTTED => 3:28:08 PM

Nov 29, 200

SOIL AND ROCK TYPES

Well graded GRAVEL (GW)
Poorly graded GRAVEL (GP)
GRAVEL with sand (GP or GW)
GRAVEL with silt (GP or GM)
Clayey GRAVEL (GC)
GRAVEL with silt (GP or GM)
Silty GRAVEL (GM)
Well graded SAND (SW)
Poorly graded SAND (SP)
SAND with gravel (SP or SW)
SAND with silt (SP or SM)
SAND with clay (SP-SC)
Clayey SAND (SC)
Silty SAND (SM)
SAND with silt (SP-SM)
Fat CLAY (CH)
Sandy fat CLAY (CH)
Lean CLAY (CL)
Sandy lean CLAY (CL)
Silty CLAY (CL-ML)
Elastic SILT (MH)
SILT (ML)
Sandy SILT (ML)
Clayey silt (MH/CL)
Poorly graded SAND (SP)
ORGANICS (OH)
Low plasticity ORGANICS (OL)
SANDSTONE (SS)
SILTSTONE (SS)
CLAYSTONE (SS)
Interbedded Rock Strata (SS)
PAVEMENT

SAMPLERS

75mm-OD, 71mm-ID Thin Walled Tube
75mm-OD, 63mm-ID Modified California Liner
63mm-OD, 54mm-ID* Thin Walled Drive Tube
63mm-OD, 54mm-ID SPT Split Spoon Sampler
92.5mm-OD, 84mm-ID Diamond Liner
Rock Core (bar) symbol represents recovery (%)

* A Hydraulic-OD, 84 mm-ID tapered drive tube was used to sample coarse sand, gravel and rock

STANDARD PENETRATION TEST (SPT) AND MODIFIED CALIFORNIA (MC) LINER SAMPLERS

Samplers were driven with a 63.6 kg hammer dropped approximately 760 mm.

50: Number of blows to produce 50 mm of penetration after the initial 15 mm of seating.

50/10cm: Number of blows required to produce the indicated penetration after an initial 10 cm seating.

R=50cm: 50 blows produced the indicated penetration during the initial 15 cm interval.

Note: In rock during interval recovery(%)-RQD are shown in the Blow Count column.

TUBE AND OFFSHORE LINER SAMPLERS

W=34: Offshore Liner sample advanced with the weight of an 82 kg hammer.

PUSH or SAVE: Pushed 89-mm-wall 76mm-OD tube.

15/50cm: Number of blows required to produce the indicated penetration using a 64mm-ID-slide sampler. The sampler was driven with an 82 kg downhole hammer dropped approximately 1.8 m.

CLASSIFICATION TESTS BLOW COUNTS AND ROCK QUALITY

a PERCENT PASSING #200 SIEVE
w WATER CONTENT (%)
□ SUBMERGED UNIT WEIGHT (kN/m³)
○ THEORETICAL SUBMERGED UNIT WEIGHT (kN/m³)
PLASTIC LIMIT, LIQUID LIMIT
● EQUIVALENT SPT BLOW COUNT = SAC BLOWCOUNT/1.25 OR SPT BLOWCOUNT
---- ROCK QUALITY DESIGNATION (RQD)
—— ROCK RECOVERY PERCENT
—— ROCK CORING RATE

STRENGTH TESTS

POCKET PENETROMETER
TORVANE
FIELD VANE
MINATURE VANE, (R: RESIDUAL VANE)
UNCONSOLIDATED UNDRAINED TRIAXIAL
WINDSOR CONE
UNCONFINED COMPRESSION (ROCK)
(Open symbols indicate assumed value)
Shear Strength Interpreted from CPT Tip Resistance (qc = 12 qu)
POINT LOAD TEST (ROCK-INTACT SPECIMEN)
POINT LOAD TEST (ROCK-ALONG WEAK PLANE)
UNCONFINED COMPRESSION (ROCK)
Soil Strength Exceeds Capacity of Measuring Device
Ripple Sample broke along discontinuity
Intact sample tested have greater strength
FRACTURE DENSITY (ROCK)

STRENGTH OF COHESIVE SOILS

Consistency	Undrained Shear Strength kPa
Very Soft	less than 13
Soft	12 to 25
Firm	25 to 50
Stiff	50 to 100
Very Stiff	100 to 200
Hard	greater than 200

DENSITY OF GRANULAR SOILS

Description Term	Relative Density (%)*
Very Loose	less than 15
Loose	15 to 35
Medium Dense	35 to 65
Dense	65 to 85
Very Dense	greater than 85

*Estimated from sampler driving record and CPT for reinforcement

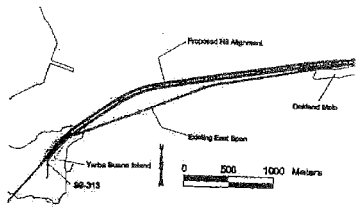

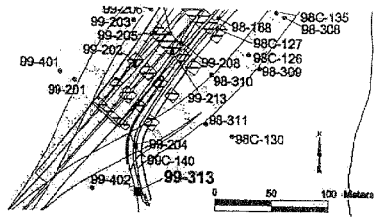

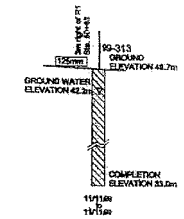

Metric

DIST	COUNTY	ROUTE	KILOMETER POST TOTAL PROJECT	SHEET NO.	TOTAL SHEETS
04	SF	80		126	137

REGISTERED GEOTECHNICAL ENGINEER

PLANS APPROVAL DATE

REGISTERED PROFESSIONAL ENGINEER — No. GE 2584 — Exp. 12-31-00 — GEOTECHNICAL — STATE OF CALIFORNIA

FUGRO-EARTH MECHANICS, A JOINT VENTURE
7700, Edgewater Dr., Ste. 848, Oakland, CA 94621
(510) 562-6833, FAX (510) 562-6836

The State of California or its officers or agents shall not be responsible for the accuracy or completeness of electronic copies of this plan sheet.

BORING 99-313

COORDINATES: E1636833 N847099
CA State Plane Zone 3, NAD83, Meters
GROUND ELEVATION: 48.7m (MSL)
START DATE: 11/1/99

STATION: 3m right of R1 Sta. 50+83
COMPLETION ELEVATION: 33.0m (MSL)
END DATE: 11/11/99

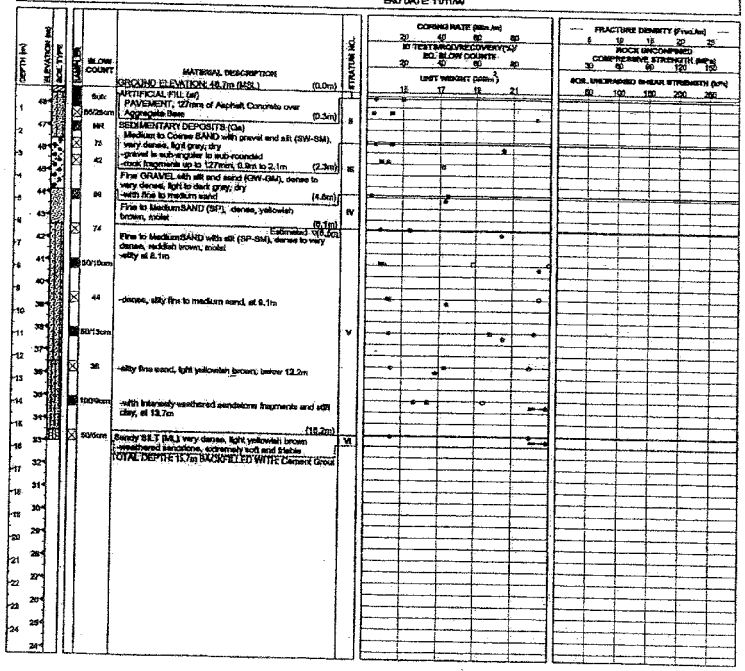

CONTRACT NO. 04-0120R4

CONTRACT CHANGE ORDER NO. 73

SHEET 126 OF 220

ROBERT PRICE / BABA MOHAN — GEOTECHNICAL DESIGN OVERSIGHT	DRAWN BY	J. PALMER	L. FLUKS — Field Investigation	PREPARED FOR THE STATE OF CALIFORNIA DEPARTMENT OF TRANSPORTATION	M. KAPUSKAR — PROJECT ENGINEER
	CHECKED BY	MJKAPUSKAR, S.VARATHARAJ	DATE SEE ABOVE		

ORIGINAL SCALE IN CENTIMETERS FOR REDUCED PLANS 0 1 2 3 4 5 6 7 8 9 10

CU 04251
EA 012051

BRIDGE NO.	34-0006 R
KM POST	12.8
POST MILE	

SAN FRANCISCO OAKLAND BAY BRIDGE
EAST SPAN SEISMIC SAFETY PROJECT

YBI EB ON-RAMP STRUCTURE (INITIAL)

LOG OF TEST BORINGS NO. 1

DISREGARD PRINTS BEARING EARLIER REVISION DATES →

REVISION DATES (PRELIMINARY STAGE ONLY)

SHEET 5 OF 15

SOIL AND ROCK TYPES

Well graded GRAVEL (GW)
Poorly graded GRAVEL (GP)
GRAVEL with silt (GP or GW)
GRAVEL with clay (GP or GW)
Clayey GRAVEL (GC)
GRAVEL with silt (GP or GW)
Silty GRAVEL (GM)
Well graded SAND (SW)
Poorly graded SAND (SP)
SAND with gravel (SP or SW)
SAND with clay (SP-SC)
Clayey SAND (SC)
Silty SAND (SM)
SAND with silt (SP-SM)
Fat CLAY (CH)
Sandy fat CLAY (CH)
Lean CLAY (CL)
Sandy lean CLAY (CL)
Silty CLAY (CL-ML)
Elastic SILT (MH)
SILT (ML)
Sandy SILT (ML)
Clayey silt (ML/CL)
Highly plastic ORGANICS (OH)
Low plasticity ORGANICS (OL)
SANDSTONE (Ss)
SILTSTONE (Ms)
CLAYSTONE (Cs)
Interbedded Rock Strata (Sr)
PAVEMENT

SAMPLERS

76mm-OD, 72mm-ID Thin Walled Tube
Shelby-OD, 64mm-OD Thin Walled Driven Tube
83.3mm-OD, 64mm-ID Osterberg Liner
76mm-OD, 63mm-ID Modified California Liner
67mm-OD, 64mm-ID SPT Split Spoon Sampler
Rock Core (insert symbol) representative recovery (%)

* A variable-OD, 64-mm-ID tapered driven tube was used to sample coarse sand, gravel and rock

STANDARD PENETRATION TEST (SPT) AND MODIFIED CALIFORNIA (MC) LINER SAMPLERS

Samplers were driven with a 63.5 kg hammer dropped approximately 760 mm.

20	Number of blows to produce 30 cm of penetration after the initial 15 cm of seating.
50/23cm	Number of blows required to produce the indicated penetration after an initial 15 cm seating.
Refusal	50 blows produced the indicated penetration during the initial 15 cm interval.

Note: In rock, during interval recovery(%)/RQD are shown in the Blow Count column.

TUBE AND OFFSHORE LINER SAMPLERS

WOH	Offshore liner barrels advanced with the weight of an 82 kg hammer.
PUSH or SAVE	Pushed thin-walled 76mm-OD tube.
15/60cm	Number of blows required to produce the indicated penetration using a 64mm-ID tube sampler. The sampler was driven with an 82 kg downhole hammer dropped approximately 1.5 m.

CLASSIFICATION TESTS BLOW COUNTS AND ROCK QUALITY

- P PERCENT PASSING #200 SIEVE
- w WATER CONTENT (%)
- D ——— UNIT WEIGHT (pcf)
- O THEORETICAL ——— UNIT WEIGHT (pcf)

PLASTIC LIMIT | LIQUID LIMIT

- e EQUIVALENT SPT BLOW COUNT = (MC BLOW COUNT/1.8) OR SPT BLOW COUNT
- ---- ROCK QUALITY DESIGNATION (RQD)
- ------ ROCK RECOVERY PERCENT
- ------ ROCK CORING RATE

STRENGTH TESTS

- ◆ POCKET PENETROMETER
- ◆ TORVANE
- ◆ REMOTE VANE
- ◆ MINIATURE VANE R RESIDUAL VANE)
- ▲ UNCONSOLIDATED UNDRAINED TRIAXIAL
- ▼ SWEDISH FALL CONE
- ■ UNCONFINED COMPRESSION (SOIL)
- Qa (Greek symbols indicate remolded tests)
- Shear Strength Interpreted from CPT Tip Resistance (qt = 12-15)
- ● POINT LOAD TEST (ROCK-WITHOUT SPECIMEN)
- ● POINT LOAD TEST (ROCK-ALONG WEAK PLANE)
- ■ UNCONFINED COMPRESSION (ROCK)
- + Shear Strength Equals Capacity of Measuring Device Rock fragments broke along discontinuity; Intact sample would have greater strength
- ——— FRACTURE DENSITY (ROCK)

STRENGTH OF COHESIVE SOILS

Undrained Shear Strength

Consistency	kPa
Very Soft	less than 13
Soft	13 to 25
Firm	26 to 50
Stiff	50 to 100
Very Stiff	100 to 200
Hard	greater than 200

DENSITY OF GRANULAR SOILS

Descriptive Term	Relative Density (%)*
Very Loose	less than 15
Loose	15 to 35
Medium Dense	35 to 65
Dense	65 to 85
Very Dense	greater than 85

*Estimated from sampler driving resistance and CPT tip resistance.

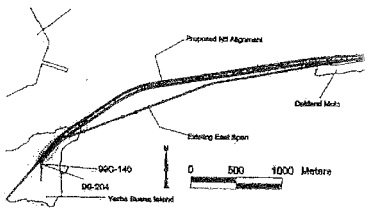

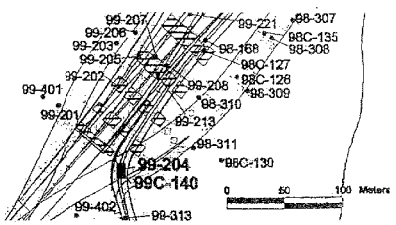

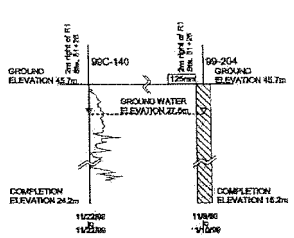

Metric

DIST	COUNTY	ROUTE	KILOMETER POST TOTAL PROJECT	SHEET NO.	TOTAL SHEETS
04	SF	80		127	137

REGISTERED GEOTECHNICAL ENGINEER

PLANS APPROVAL DATE

REGISTERED PROFESSIONAL ENGINEER — VIKE TAPUSKAR — No. GE 2584 Exp. 12-31-06 — GEOTECHNICAL — STATE OF CALIFORNIA

FUGRO-EARTH MECHANICS, A JOINT VENTURE 7700, Edgewater Dr., Ste. 845, Oakland, CA 94621 (510) 562-8833, FAX (510) 562-8658

The State of California or its officers or agents shall not be responsible for the accuracy or completeness of electronic copies of this plan sheet.

CPT 99C-140

COORDINATES: E1636929 N647140
CA State Plane Zone 3, NAD83, Meters
GROUND ELEVATION: 48.7m (MSL)
START DATE: 11/22/99

STATION: 2m right of R1 Sta. 51+25
COMPLETION ELEVATION: 24.2m (MSL)
CONE END AREA: 15.00 sq. cm
(Area Ratio = 0.86)

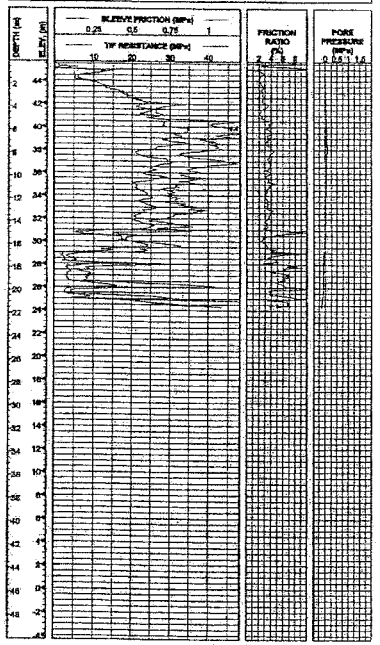

BORING 99-204

COORDINATES: E1636929 N647139
CA State Plane Zone 3, NAD83, Meters
GROUND ELEVATION: 48.7m (MSL)
START DATE: 11/9/99

STATION: 2m right of R1 Sta. 51+25
COMPLETION ELEVATION: 18.2m (MSL)
END DATE: 11/10/99

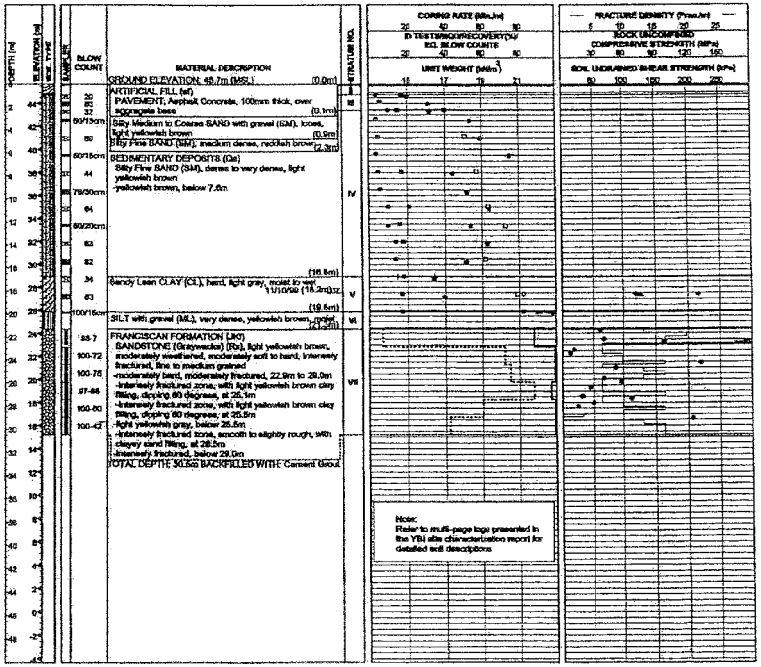

CONTRACT NO. 04-012004

CONTRACT CHANGE ORDER NO. 73

SHEET 121 OF 262

ROBERT PRICE / BABA MOHAN — REGISTERED PHASE, DESIGN OVERSIGHT	DRAWN BY	J. PALMER	S. SICILIANO — FIELD INVESTIGATOR — DATE SEE ABOVE	PREPARED FOR THE STATE OF CALIFORNIA DEPARTMENT OF TRANSPORTATION	M. KAPUSKAR — PROJECT ENGINEER	BRIDGE NO. 34-0005R
	CHECKED BY	M. KAPUSKAR, S. VARATHARAJ				KM POST 12.8 ▲
						POST MILE

ORIGINAL SCALE IN CENTIMETERS FOR REDUCED PLANS

CU 84251
EA 012051

SAN FRANCISCO OAKLAND BAY BRIDGE
EAST SPAN SEISMIC SAFETY PROJECT

YBI EB ON-RAMP STRUCTURE (INITIAL)

LOG OF TEST BORINGS NO. 2

DISREGARD PRINTS BEARING EARLIER REVISION DATES →

REVISION DATES (PRELIMINARY STAGE ONLY)	SHEET	OF
	6	15

SOIL AND ROCK TYPES

- Well graded GRAVEL (GW)
- Poorly graded GRAVEL (GP)
- GRAVEL with sand (GP or GW)
- GRAVEL with clay (GP or GW)
- Clayey GRAVEL (GC)
- GRAVEL with silt (GP or GW)
- Silty GRAVEL (GM)
- Well graded SAND (SW)
- Poorly graded SAND (SP)
- SAND with gravel (SP or SW)
- SAND with clay (SP-SC)
- Clayey SAND (SC)
- Silty SAND (SM)
- SAND with silt (SP-SM)
- Fat CLAY (CH)
- Sandy fat CLAY (CH)
- Lean CLAY (CL)
- Sandy lean CLAY (CL)
- Silty CLAY (CL-ML)
- Elastic SILT (MH)
- SILT (ML)
- Sandy SILT (ML)
- Clayey silt (ML/CL)
- Highly plastic ORGANICS (OH)
- Low plasticity ORGANICS (OL)
- SANDSTONE (Rx)
- SILTSTONE (Rx)
- CLAYSTONE (Rx)
- Interbedded Rock Strata (Rx)
- PAVEMENT

SAMPLERS

- 76mm-OD, 72mm-ID Thin Walled Tube
- 57mm-OD, 54mm-ID Thin Walled Driven Tube
- 88.9mm-OD, 84mm-ID Oldstone Liner
- 76mm-OD, 60mm-ID Modified California Liner
- 61mm-OD, 38mm-ID SPT Split Spoon Sampler
- Rock Core (Insert diameter) approximate recovery (%)

* A variable-OD, 84-mm-ID tapered driven tube has used to sample coarse sand, gravel and rock.

STANDARD PENETRATION TEST (SPT) AND MODIFIED CALIFORNIA (MC) LINER SAMPLERS

Samplers were driven with a 63.5 kg hammer dropped approximately 760 mm.

20	Number of blows to produce 20 mm of penetration after the initial 15 mm of seating
50/25cm	Number of blows required to produce the indicated penetration after an initial 15 mm seating.
Refusal	50 blows produced the indicated penetration during the initial 15 mm interval.

Note: In rock coring interval recovery (%) ROD are shown in the Blow Count column.

TUBE AND OFFSHORE LINER SAMPLERS

WOH	Offshore Liner sample advanced with the weight of an 80 kg hammer.
PUSH or SAVE	Pushed thin walled 76mm-OD tube.
15/60cm	Number of blows required to produce the indicated penetration using a 64mm-ID tube sampler. The sampler was driven with an 80 kg downhole hammer dropped approximately 3.8 m.

CLASSIFICATION TESTS BLOW COUNTS AND ROCK QUALITY

- PERCENT PASSING #200 SIEVE
- WATER CONTENT (%)
- SUBMERGED UNIT WEIGHT (kN/m³)
- THEORETICAL SUBMERGED UNIT WEIGHT (kN/m³)

PLASTIC LIMIT LIQUID LIMIT

- EQUIVALENT SPT BLOW COUNT = (MC BLOWCOUNT/0.6) OR SPT BLOWCOUNT
- ROCK QUALITY DESIGNATION (RQD)
- ROCK RECOVERY PERCENT
- ROCK CORING RATE

STRENGTH TESTS

- POCKET PENETROMETER
- TORVANE
- REMOTE VANE
- MINIATURE VANE (R RESIDUAL VANE)
- UNCONSOLIDATED UNDRAINED TRIAXIAL
- SWEDISH FALL CONE
- UNCONFINED COMPRESSION (ROCK)
- Shear strength interpreted from CPT Tip Resistance (Nk = 12-15)
- POINT LOAD TEST (ROCK-INTACT SPECIMEN)
- POINT LOAD TEST (ROCK-ALONG WEAK PLANE)
- UNCONFINED COMPRESSION (ROCK)
- Soil: Strength Exceeds Capacity of Measuring Device. Rock: Sample broke along discontinuity; Intact sample would have greater strength
- FRACTURE DENSITY (ROCK)

STRENGTH OF COHESIVE SOILS

Consistency	Unlimited Shear Strength kPa
Very Soft	less than 12
Soft	12 to 25
Firm	25 to 50
Stiff	50 to 100
Very Stiff	100 to 200
Hard	greater than 200

DENSITY OF GRANULAR SOILS

Descriptive Term	Relative Density (%)*
Very Loose	less than 15
Loose	15 to 35
Medium Dense	35 to 65
Dense	65 to 85
Very Dense	greater than 85

*Estimated from sampler driving record and CPT tip resistance.

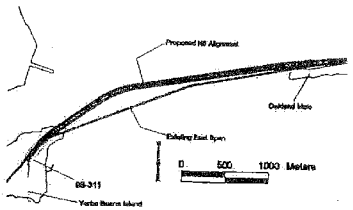

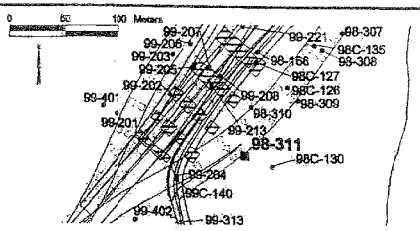

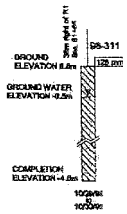

BORING 98-311

COORDINATES: E1836992 N847158
CA State Plane Zone 3, NAD83, Meters
GROUND ELEVATION: 8.8m (MSL)
START DATE: 10/29/96

STATION: 38m right of R1 Sta. 81+86
COMPLETION ELEVATION: -4.8m (MSL)
END DATE: 10/30/96

DEPTH (m)	ELEVATION (m)	SOIL TYPE	SAMPLE	BLOW COUNT	MATERIAL DESCRIPTION	STRATUM SEQ.
					GROUND ELEVATION: 8.8m (MSL) (0.0m)	
					ARTIFICIAL FILL (af)	
					PAVEMENT, Asphalt Concrete, 3 in thick (0.1m)	
1				22	Silty Fine SAND (SM), medium dense, dark brown and dark yellowish brown, moist (0.6m)	M
2				33	SEDIMENTARY DEPOSITS (Qs)	
3				50/4cm	Sandy Lean CLAY (CL), very stiff to hard, yellowish brown mottled with gray, moist	
4				100-5	-with clay seams (2.3m)	
5				100-10	FRANCISCAN FORMATION (JKf)	
6				91-14	SANDSTONE (Graywacke) (Rx), yellowish brown to brown, moderately weathered	
7					-moderately hard, moderately indurated, with intersecting fractures, dipping 10 to 45 degrees, with smooth and planar oxidized surfaces	
8				100-31	-3mm thick clay-filled fractures, at 3.1m Estimated ▽ (7.0m)	M
9					-intensely fractured at 3.5m	
10				98-39	-with intersecting fractures, dipping 45 to 60 degrees, with smooth and planar oxidized surfaces, below 6.0m	
11					-intensely fractured, with black siltstone fragments aligned at 30 degrees, at 6.8m	
12				100-33	-with several elongated tubular voids, with fractures with rough surfaces dipping 45 to 60 degrees in area of voids, at 7.6m	
13				93-43	-brown to grayish brown, slightly weathered, below 8.5m	
14					-with fracture zone, at 8.2m	
15					-gray, slightly weathered to fresh, with quartz-heated fractures, below 8.6m	
16					-siltstone, dipping 80 degrees, at 10.7m	
17					TOTAL DEPTH: 11.0m BACKFILLED WITH Cement Grout	

CORING RATE (Min./m): 20 40 60 80
ID TESTS/RECOVERY (%)/ SQ. BLOW COUNTS: 20 40 60 80
UNIT WEIGHT (kN/m³): 15 17 19 21

FRACTURE DENSITY (Frac./m): 5 10 15 20 25
ROCK UNCONFINED COMPRESSIVE STRENGTH (MPa): 30 60 90 120 150
SOIL UNCONFINED SHEAR STRENGTH (kPa): 50 100 150 200 250

Note: Refer to multi-page logs presented in the YBI site characterization report for detailed soil descriptions

DIST	COUNTY	ROUTE	KILOMETER POST TOTAL PROJECT	SHEET NO.	TOTAL SHEETS
04	SF	80		128	137

REGISTERED GEOTECHNICAL ENGINEER

PLANS APPROVAL DATE

REGISTERED PROFESSIONAL ENGINEER MIKE KAPUSKAR No. GE 2564 Exp. 12-31-06 GEOTECHNICAL STATE OF CALIFORNIA

FUGRO-EARTH MECHANICS, A JOINT VENTURE, 7700 Edgewater Dr., Ste. 845, Oakland, CA 94621 (510) 562-8833; FAX (510) 562-8858

The State of California or its officers or agents shall not be responsible for the accuracy or completeness of electronic copies of this plan sheet.

CONTRACT NO. 04-012684

CONTRACT CHANGE ORDER NO 73

SHEET 272 OF 286

SAN FRANCISCO OAKLAND BAY BRIDGE
EAST SPAN SEISMIC SAFETY PROJECT

YBI EB ON-RAMP STRUCTURE (INITIAL)

LOG OF TEST BORINGS NO. 3

ROBERT PRICE / SABA MOHAN
GEOTECHNICAL DESIGN OVERSIGHT

DRAWN BY A.BROUGHTON
CHECKED BY M. KAPUSKAR, S. SICILIANO, S. VARATHARAJ

B.SCHELL
FIELD INVESTIGATOR
DATE SEE ABOVE

PREPARED FOR THE
STATE OF CALIFORNIA
DEPARTMENT OF TRANSPORTATION

M. KAPUSKAR
PROJECT ENGINEER

ORIGINAL SCALE IN CENTIMETERS FOR REDUCED PLANS 0 1 2 3 4 5 6 7 8 9 10

CU 04251
EA 012051

BRIDGE NO. 34-0008 R
KM POST 12.8
POST MILE

DISREGARD PRINTS BEARING EARLIER REVISION DATES

REVISION DATES (PRELIMINARY STAGE ONLY)

SHEET 7 OF 15

BOIL AND ROCK TYPES

Well graded GRAVEL (GW) | Sandy lean CLAY (CL) | Poorly graded GRAVEL (GP) | Lean CLAY (CL) | GRAVEL with sand (GP or GW) | Sandy fat CLAY (CH) | GRAVEL with silt (GP or GW) | Silty CLAY (CL-ML) | Clayey GRAVEL (GC) | Elastic SILT (MH) | GRAVEL with silt (GP or GW) | SILT (ML) | Silty GRAVEL (GM) | Sandy SILT (ML) | Well graded SAND (SW) | Clayey silt [MH-CL] | Poorly graded SAND (SP) | Highly plastic ORGANICS (OH) | SAND with gravel (SP or SW) | Low plasticity ORGANICS (OL) | SAND with clay (SP-SC) | SANDSTONE (Ss) | Clayey SAND (SC) | SILTSTONE (Mst) | Silty SAND (SM) | CLAYSTONE (Cs) | SAND with silt (SP-SM) | Interbedded Rock Strata (Ibs) | Fat CLAY (CH) | PAVEMENT

SAMPLERS

76mm-OD, 72mm-ID Thin Walled Tube | 76mm-OD, 72mm-ID Modified California Liner | 97mm-OD, 84mm-ID Thin Walled Driven Tube | 97mm-OD, 89mm-ID SPT Split Spoon Sampler | 63.5mm-OD, 54mm-ID Diamond Liner | Rock Core (bead symbol represents recovery (%)

* A variable-OD, 64 mm-ID tapered driven tube was used to sample coarse sand, gravel and rock.

STANDARD PENETRATION TEST (SPT) AND MODIFIED CALIFORNIA (MC) LINER SAMPLERS

Samplers were driven with a 63.5 kg hammer dropped approximately 760 mm.

20 — Number of blows to produce 30 cm of penetration after the initial 15 cm of seating.

MC29/cm — Number of blows required to produce the indicated penetration after an initial 15 cm seating.

Refusal — 50 blows produced the indicated penetration during the initial 15 cm interval.

Note: In rock coring interval recovery(%)-RQD-run are shown in the Blow Count column.

TUBE AND OFFSHORE LINER SAMPLERS

WOH — Offshore Liner sample advanced with the weight of an 80 kg hammer.

PUSH or SPVE — Pushed thin-walled 76mm-OD tube.

16/80cm — Number of blows required to produce the indicated penetration using a 64mm-ID tube sampler. The sampler was driven with an 80 kg downhole hammer dropped approximately 1.8 m.

CLASSIFICATION TESTS BLOW COUNTS AND ROCK QUALITY

- #200 — PERCENT PASSING #200 SIEVE
- w — WATER CONTENT (%)
- γ — RUNDRIED UNIT WEIGHT (kN/m³)
- γ — THEORETICAL RUNDRIED UNIT WEIGHT (kN/m³)
- PLASTIC LIMIT — LIQUID LIMIT
- ○ — EQUIVALENT SPT BLOW COUNT, N1 = (MC BLOWCOUNT)/1.8 OR SPT BLOWCOUNT
- ----- — ROCK QUALITY DESIGNATION (RQD)
- ------ — ROCK RECOVERY PERCENT
- ------ — ROCK CORING RATE

STRENGTH TESTS

- ● — POCKET PENETROMETER
- ◇ — TORVANE
- ○ — REMOTE VANE
- ⊕ — MINIATURE VANE (▲ RESIDUAL VANE)
- ▲ — UNCONSOLIDATED UNDRAINED TRIAXIAL
- ▽ — SWEDISH FALL CONE
- ■ — UNCONFINED COMPRESSION (qu)
- Qu (Open symbols indicate remolded tests)
- Shear Strength Interpreted from CPT Qp Relationship (qc = 13-15)
- ● — POINT LOAD TEST (ROCK-INTACT SPECIMEN)
- ○ — POINT LOAD TEST (ROCK-ALONG WEAK PLANE)
- ■ — UNCONFINED COMPRESSION (ROCK)
- + — Bolt Strength Exceeds Capacity of Measuring Device. Rock/ Sample broke along discontinuity. Intact sample would have greater strength.
- —— — FRACTURE DENSITY (ROCK)

STRENGTH OF COHESIVE SOILS

Consistency	Undrained Shear Strength, kPa
Very Soft	less than 12
Soft	12 to 25
Firm	25 to 50
Stiff	50 to 100
Very Stiff	100 to 200
Hard	greater than 200

DENSITY OF GRANULAR SOILS

Descriptive Term	Relative Density (%)*
Very Loose	less than 15
Loose	15 to 35
Medium Dense	35 to 65
Dense	65 to 85
Very Dense	greater than 85

*Estimated from sampler driving record and CPT by correlations.

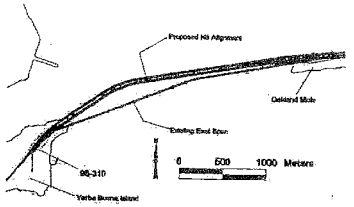

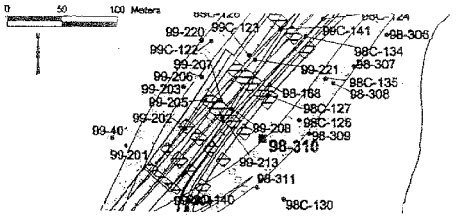

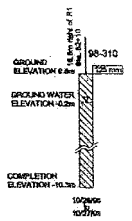

BORING 98-310

COORDINATES: E1838497 N507202
CA State Plane Zone 3, NAD83, Meters
GROUND ELEVATION: 8.6m (MSL)
START DATE: 10/26/98

STATION: 18.6m right of R1 Sta. 82+10
COMPLETION ELEVATION: -10.3m (MSL)
END DATE: 10/27/98

DEPTH (m)	EL. ELEVATION (m)	SOIL TYPE	BLOW COUNT	MATERIAL DESCRIPTION	STRATUM NO.
				GROUND ELEVATION: 8.6m (MSL) (0.0m)	
			Batt	ARTIFICIAL FILL (af)	
				PAVEMENT, Asphalt Concrete, 75mm thick (0.1m)	
			2	Silty SAND (SM), dark brown and dark yellowish brown, moist	
				-with abundant angular rock and brick fragments (0.6m)	III
			7	BEACH DEPOSITS (Qe)	
				Silty Fine SAND (SM), loose, dark brown and dark yellowish brown, moist	
				(4.6m)	
			6	SILT with fine sand (ML), loose, dark yellowish brown, moist	
				-with angular sandstone fragments	IV
				(6.4m)	
			27	SEDIMENTARY DEPOSITS (Qs) Estimated by: (7.0m)	
			28	Clayey Fine SAND (SC), medium dense, mottled yellowish brown and gray, moist	
				-laminated to thinly bedded (13mm), with roots and small rounded sandstone fragments to about 3mm diameter	V
				-with rounded gray sandstone gravel, at 8.1m (9.1m)	
			50/10cm	Clayey SILT (ML-CL), hard, brown and mottled gray	
				-with dark brown rounded rock fragments	VI
				(10.7m)	
			78	FRANCISCAN FORMATION (JKf)	
				SANDSTONE (Greywacke) (Ss), dark yellowish brown	VII
				-with pale brown to irregular zones, decomposed, soil, intersecting fractures with oxidized, smooth, planar surfaces (12.2m)	
			100-7	SANDSTONE (Greywacke) (Ss), brown, moderately weathered, moderately hard	
			100-0	-well indurated, intensely fractured, with intersecting	
			100-31	joints (30 to 70 degrees), bedding dipping 40 degrees	VIII
			100-40	-fractures are slightly rough to smooth, planar, closely spaced, with very thin, dark brown oxidation coatings	
				-with 3mm thick quartz filling, at 13.6m	
			100-66	-fractures orients: predominately 45 to 80 degrees, at 14.8m	
				-gray, slightly weathered to fresh, oxidation limited to joints, with clean, smooth joint surfaces predominately oriented 45 to 60 degrees, at 16.6m	
				TOTAL DEPTH: 17.1m BACKFILLED WITH: Cement Grout	

CORING RATE (Min./m)
RQD TESTIMONY RECOVERY (%)
STD. BLOW COUNTS
UNIT WEIGHT (pcf)

FRACTURE DENSITY (Fract./m)
ROCK UNCONFINED COMPRESSIVE STRENGTH (MPa)
SOIL UNDRAINED SHEAR STRENGTH (kPa)

CONTRACT NO. 04-0120K4

CONTRACT CHANGE ORDER NO 73

SHEET 213 OF 280

ROBERT PRICE / BABA MOHAN — REVIEWED NEAL DORAN OVERSIGHT	DRAWN BY	A.BROUGHTON	S.SCHELL — FIELD INVESTIGATION	PREPARED FOR THE STATE OF CALIFORNIA DEPARTMENT OF TRANSPORTATION	M. KAPUSKAR — PROJECT ENGINEER	BRIDGE NO.	SAN FRANCISCO OAKLAND BAY BRIDGE EAST SPAN SEISMIC SAFETY PROJECT
	CHECKED BY	S.SICILIANO, S.VARATHARAJ	DATE SEE ABOVE			34-0008 R	YBI EB ON-RAMP STRUCTURE (INITIAL)
						KM POST 12.8	LOG OF TEST BORINGS NO. 4
				ORIGINAL SCALE IN CENTIMETERS FOR REDUCED PLANS 0 1 2 3 4 5 6 7 8 9 10	CU 64251 BA 012051	PORT MILE	DISREGARD PRINTS BEARING EARLIER REVISION DATES → REVISION DATES (PRELIMINARY STAGE ONLY) SHEET 8 OF 15

DIST	COUNTY	ROUTE	KILOMETER POST TOTAL PROJECT	SHEET NO.	TOTAL SHEETS
04	SF	80		129	137

REGISTERED GEOTECHNICAL ENGINEER

PLANS APPROVAL DATE

REGISTERED PROFESSIONAL ENGINEER — MIKE KAPUSKAR — No. GE 2554 Exp. 12-31-06 — GEOTECHNICAL — STATE OF CALIFORNIA

FUGRO-EARTH MECHANICS, A JOINT VENTURE
7770 Edgewater Dr., Ste. 840
Oakland, CA 94621
(510) 562-6633, FAX (510) 562-6956

The State of California or its officers or agents shall not be responsible for the accuracy or completeness of electronic copies of this plan sheet.

DIST	COUNTY	ROUTE	KILOMETER POST TOTAL PROJECT	SHEET NO.	TOTAL SHEETS
04	SF	80		130	137

REGISTERED GEOTECHNICAL ENGINEER

PLANS APPROVAL DATE

FUGRO-EARTH MECHANICS,
A JOINT VENTURE,
7700 Edgewater Dr., Ste. 848,
Oakland, CA 94621
(510) 562-8333, FAX (510) 562-8854

REGISTERED PROFESSIONAL ENGINEER MIKE KAPUSKAR No. GE 2564 Exp. 12-31-06 GEOTECHNICAL STATE OF CALIFORNIA

The State of California or its officers or agents shall not be responsible for the accuracy or completeness of electronic copies of this plan sheet.

SOIL AND ROCK TYPES

- Well graded GRAVEL (GW)
- Poorly graded GRAVEL (GP)
- GRAVEL with sand (GP or GW)
- GRAVEL with clay (GP or GW)
- Clayey GRAVEL (GC)
- GRAVEL with silt (GP or GW)
- Silty GRAVEL (GM)
- Well graded SAND (SW)
- Poorly graded SAND (SP)
- SAND with gravel (SP or SW)
- SAND with clay (SP-SC)
- Clayey SAND (SC)
- Silty SAND (SM)
- SAND with silt (SP-SM)
- Fat CLAY (CH)
- Sandy fat CLAY (CH)
- Lean CLAY (CL)
- Sandy lean CLAY (CL)
- Silty CLAY (CL-ML)
- Elastic SILT (MH)
- SILT (ML)
- Sandy SILT (ML)
- Clayey silt (ML-CL)
- Highly plastic ORGANICS (OH)
- Low plastic ORGANICS (OL)
- SANDSTONE (Rx)
- SILTSTONE (Rx)
- CLAYSTONE (Rx)
- Interbedded Rock Strata (Rx)
- PAVEMENT

SAMPLERS

- 70mm-OD, 72mm-ID Thin Walled Tube
- 87mm-OD, 84mm-ID Thin Walled Driven Tube
- 63.5mm-OD, 59mm-ID Stainless Liner
- 70mm-OD, 60mm-ID Modified California Liner
- 51mm-OD, 38mm-ID SPT Split Spoon Sampler
- Rock Core (best symbol) Increasing recovery (%)

* A variable-OD, 54-mm-ID bearing driven tube was used to sample coarse sand, gravel and rock.

STANDARD PENETRATION TEST (SPT) AND MODIFIED CALIFORNIA (MC) LINER SAMPLERS

Samplers were driven with a 63.5 kg hammer dropped approximately 760 mm.

20 — Number of blows to produce 30 cm of penetration after the initial 15 cm of seating.

MC/Blows — Number of blows required to produce the indicated penetration after an initial 15 cm seating.

Pwh/Rcc — 50 blows produced the indicated penetration during the initial 15 cm interval.

Note: In rock coring interval recovery(%)-RQD are shown in the Blow Count column.

TUBE AND OFFSHORE LINER SAMPLERS

WOH — Offshore Liner sample advanced with the weight of an 80 kg hammer.

PUSH or SAVE — Pushed thin-walled 70mm-OD tube.

15/50cm — Number of blows required to produce the indicated penetration using a 54mm-ID-tube sampler. The sampler was driven with an 80 kg downhole hammer dropped approximately 1.5 m.

CLASSIFICATION TESTS BLOW COUNTS AND ROCK QUALITY

- PERCENT PASSING #200 SIEVE
- WATER CONTENT (%)
- SUBMERGED UNIT WEIGHT (kN/m³)
- THEORETICAL SUBMERGED UNIT WEIGHT (kN/m³)
- PLASTIC LIMIT — LIQUID LIMIT
- EQUIVALENT SPT BLOW COUNT
- (MC BLOWCOUNT/LB) OR SPT BLOWCOUNT
- ROCK QUALITY DESIGNATION (RQD)
- ROCK RECOVERY PERCENT
- ROCK CORING RATE

STRENGTH TESTS

- POCKET PENETROMETER
- TORVANE
- REMOLDE VANE
- MINIATURE VANE (& REMOLDE VANE)
- UNCONSOLIDATED UNDRAINED TRIAXIAL
- RAEDERN FALL CONE
- UNCONFINED COMPRESSION (SOIL)
- Open symbols indicate remolded tests
- Shear Strength Interpreted from CPT Tip Resistance (Nk = 12-15)
- POINT LOAD TEST (ROCK-INTACT SPECIMEN)
- POINT LOAD TEST (ROCK-ALONG WEAK PLANE)
- UNCONFINED COMPRESSION (ROCK)
- Rock Strength Exceeds Capacity of Measuring Device
- Rock Sample broke along discontinuity; intact sample would have greater strength
- FRACTURE DENSITY (ROCK)

STRENGTH OF CONESIVE SOILS

Consistency	Undrained Shear Strength kPa
Very Soft	less than 12
Soft	12 to 25
Fine	25 to 50
Stiff	50 to 100
Very Stiff	100 to 200
Hard	greater than 200

DENSITY OF GRANULAR SOILS

Descriptive Term	Relative Density (%)*
Very Loose	less than 15
Loose	15 to 35
Medium Dense	35 to 65
Dense	65 to 85
Very Dense	greater than 85

*Estimated from sampler driving record and CPT tip resistance.

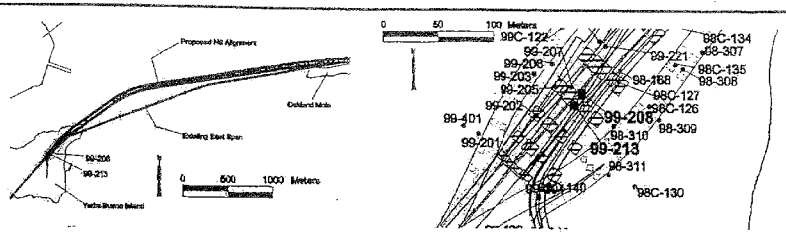

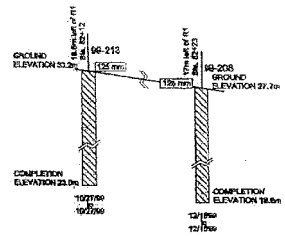

BORING 99-213

COORDINATES: E1836981 N647221
CA State Plane Zone 3, NAD83, Meters
GROUND ELEVATION: 33.2m (MSL)
START DATE: 10/27/99

STATION: 18.5m left of R1 62+12
COMPLETION ELEVATION: 23.0m (MSL)
END DATE: 10/27/99

DEPTH (m)	ELEVATION (m)	SOIL TYPE	SAMPLER	BLOW COUNT	MATERIAL DESCRIPTION	STRATUM NO.
					GROUND ELEVATION: 33.2m (MSL) (0.0m)	
				0	SAND DEPOSITS (Qa) -Silty Fine SAND (SM), loose, yellowish brown, dry -with abundant roots	I
				7		
				37	SEDIMENTARY DEPOSITS (Qa) -Silty Fine SAND (SM), dense, yellowish brown, dry -with roots, to 4.6m (2.3m)	
				38		
				32	-fine sand with silt, at 4.8m	II
				27		
				36		
				34	-silty fine to medium sand at 9.1m	
					TOTAL DEPTH: 9.6m BACKFILLED WITH: Cement Grout	

CORING RATE (Min./m): 30 40 60 80
ID TESTS/RQD/RECOVERY(%) BCL BLOWCOUNTS: 30 40 60 80
UNIT WEIGHT (kN/m³): 15 17 19 21
FRACTURE DENSITY (Frac./m): 5 10 15 20 25
ROCK UNCONFINED COMPRESSIVE STRENGTH (MPa): 30 40 60 120 150
SOIL UNDRAINED SHEAR STRENGTH (kPa): 50 100 150 200 250

BORING 99-208

COORDINATES: E1836989 N647229
CA State Plane Zone 3, NAD83, Meters
GROUND ELEVATION: 27.7m (MSL)
START DATE: 12/15/99

STATION: 17m left of R1 Sta. 62+23
COMPLETION ELEVATION: 19.6m (MSL)
END DATE: 12/15/99

DEPTH (m)	ELEVATION (m)	SOIL TYPE	SAMPLER	BLOW COUNT	MATERIAL DESCRIPTION	STRATUM NO.
					GROUND ELEVATION: 27.7m (MSL) (0.0m)	
				6	SAND DEPOSITS (Qa) -Silty Fine SAND (SM), loose, brown, dry (1.5m)	I
				29	SEDIMENTARY DEPOSITS (Qa) -Silty Fine to Medium SAND (SM), very dense, yellowish brown, dry -silty fine sand, medium dense, to 2.3m	
				61		
				82		
				30/14cm		II
				93/29cm		
				74	-fine sand with silt at 7.8m	
					TOTAL DEPTH: 8.1m BACKFILLED WITH: Cement Grout	

CORING RATE (Min./m): 30 40 60 80
ID TESTS/RQD/RECOVERY(%) BCL BLOWCOUNTS: 30 40 60 80
UNIT WEIGHT (kN/m³): 15 17 19 21
FRACTURE DENSITY (Frac./m): 5 10 15 20 25
ROCK UNCONFINED COMPRESSIVE STRENGTH (MPa): 30 40 60 120 150
SOIL UNDRAINED SHEAR STRENGTH (kPa): 50 100 150 200 250

ROBERT PRICE / BABA MOHAN GEOTECHNICAL DESIGN OVERSIGHT	DRAWN BY	A.BROUGHTON	E. LIN FIELD INVESTIGATOR	PREPARED FOR THE STATE OF CALIFORNIA DEPARTMENT OF TRANSPORTATION	M. KAPUSKAR PROJECT ENGINEER	BRIDGE NO. 34-0005 R KM POST 12.8 POST MILE
	CHECKED BY	M. KAPUSKAR, S. VARATHARAJ	DATE SEE ABOVE			

ORIGINAL SCALE IN CENTIMETERS FOR REDUCED PLANS 0 1 2 3 4 5 6 7 8 9 10

CU 04251
EA 012051

SAN FRANCISCO OAKLAND BAY BRIDGE
EAST SPAN SEISMIC SAFETY PROJECT

YBI EB ON-RAMP STRUCTURE (INITIAL)

LOG OF TEST BORINGS NO. 5

DISREGARD PRINTS BEARING EARLIER REVISION DATES → REVISION DATES (PRELIMINARY STAGE ONLY) SHEET 9 OF 15

CONTRACT NO. 04-012024

CONTRACT CHANGE ORDER NO 73

SHEET 274 OF 280

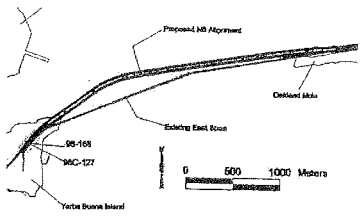

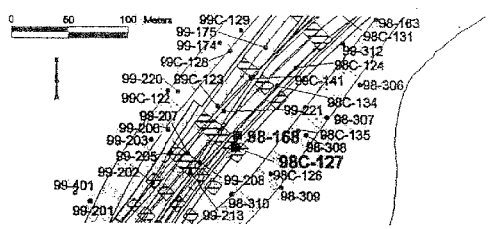

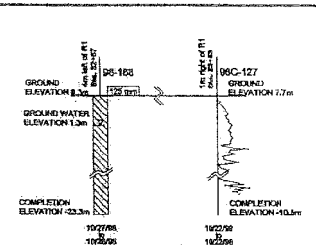

Metric

DIST	COUNTY	ROUTE	KILOMETER POST TOTAL PROJECT	SHEET NO.	TOTAL SHEETS
04	SF ▲	80		131	137

REGISTERED GEOTECHNICAL ENGINEER

FUNC APPROVAL DATE

REGISTERED PROFESSIONAL ENGINEER — MIKE KAFUSKA — No. GE 2564 Exp. 12-31-06 — GEOTECHNICAL — STATE OF CALIFORNIA

FUGRO-EARTH MECHANICS, A JOINT VENTURE, 7700 Edgewater Dr., Ste. 845, Oakland, CA 94621 (510) 562-8833, FAX (510) 562-8852

The State of California or its officers or agents shall not be responsible for the accuracy or completeness of electronic copies of this plan sheet.

SOIL AND ROCK TYPES

- Well graded GRAVEL (GW)
- Poorly graded GRAVEL (GP)
- GRAVEL with sand (GP or GW)
- GRAVEL with clay (GP or GW)
- Clayey GRAVEL (GC)
- GRAVEL with silt (GP or GW)
- Silty GRAVEL (GM)
- Well graded SAND (SW)
- Poorly graded SAND (SP)
- SAND with gravel (SP or SW)
- SAND with clay (SP-SC)
- Clayey SAND (SC)
- Silty SAND (SM)
- SAND with silt (SP-SM)
- Pot CLAY (CH)
- Sandy fat CLAY (CH)
- Lean CLAY (CL)
- Sandy lean CLAY (CL)
- Silty CLAY (CL-ML)
- Elastic SILT (MH)
- SILT (ML)
- Sandy SILT (ML)
- Clayey silt (ML-CL)
- Highly plastic ORGANICS (OH)
- Low plasticity ORGANICS (OL)
- SANDSTONE (Ss)
- SILTSTONE (Sh)
- CLAYSTONE (Sh)
- Interbedded Rock Strata (Sz)
- PAVEMENT

SAMPLERS

- Filters-CD, 72mm-ID Thin Walled Tube
- 97mm-OD, 84mm-ID Thin Walled Driven Tube
- 63.5mm-OD, 54mm-ID Drive Liner
- 76mm-OD, 60mm-ID Modified California Liner
- 63mm-OD, 54mm-ID SPT Split Recon Sampler
- Peak Core (inner) symbol represents recovery (%)

* A retractable-OD, 84 mm-ID tapered driven tube was used in sample coarse sand, gravel and soil.

STANDARD PENETRATION TEST (SPT) AND MODIFIED CALIFORNIA (MC) LINER SAMPLERS

Samplers were driven with a 63.5 kg hammer dropped approximately 760 mm.

20	Number of blows to produce 30 cm of penetration after the initial 15 cm of seating.
50/25mm	Number of blows required to produce the indicated penetration after an initial 15 cm seating.
Ref/5cm	50 blows produced the indicated penetration during the initial 15 cm interval.

Note: In rock coring interval recovery(%)-RQD are shown in the Blow Count column.

TUBE AND OFFSHORE LINER SAMPLERS

WOH	Offshore Liner sample advanced with the weight of an 85 kg hammer.
PUSH or SAVE	Pushed thin-walled 76mm-OD tube.
15/60cm	Number of blows required to produce the indicated penetration using a 64mm-ID, tube sampler. The sample was driven with an 85 kg downhole hammer dropped approximately 1.5 m.

CLASSIFICATION TESTS BLOW COUNTS AND ROCK QUALITY

- m PERCENT PASSING #200 SIEVE
- w WATER CONTENT (%)
- D SUBMERGED UNIT WEIGHT (KN/m³)
- D THEORETICAL SUBMERGED UNIT WEIGHT (KN/m³)

PLASTIC LIMIT LIQUID LIMIT

- e EQUIVALENT SPT BLOW COUNT = (MC BLOW COUNTS) OR SPT BLOW COUNT
- ----- ROCK QUALITY DESIGNATION (RQD)
- ----- ROCK RECOVERY PERCENT
- ROCK CORING RATE

STRENGTH TESTS

- POCKET PENETROMETER
- TORVANE
- FIELD VANE
- MINIATURE VANE (p: RESIDUAL VANE)
- UNCONSOLIDATED UNDRAINED TRIAXIAL
- SWEDISH FALL CONE
- UNCONFINED COMPRESSION (ROCK)

Open symbols indicate remolded tests

Shear Strength interpreted from CPT Tip Resistance (qc ÷ 15-18)

- POINT LOAD TEST (ROCK-INTACT SPECIMEN)
- POINT LOAD TEST (ROCK-ALONG WEAK PLANE)
- UNCONFINED COMPRESSION (ROCK)
- Rock Strength Exceeds Capacity of Measuring Device

Rock Sample broke along discontinuity; intact sample would have greater strength

FRACTURE DENSITY (ROCK)

STRENGTH OF COHESIVE SOILS

Consistency	Undrained Shear Strength, kPa
Very Soft	less than 12
Soft	12 to 25
Firm	25 to 50
Stiff	50 to 100
Very Stiff	100 to 200
Hard	greater than 200

DENSITY OF GRANULAR SOILS

Descriptive Terms	Relative Density (%)*
Very Loose	less than 15
Loose	35 to 35
Medium Dense	65 to 85
Dense	85 to 95
Very Dense	greater than 95

*Estimated from sampler driving record and CPT tip resistance.

BORING 98-168

COORDINATES: E1636003 N647251
CA State Plane Zone 3, NAD83, Meters
GROUND ELEVATION: 8.3m (MSL)
START DATE: 10/27/98

STATION: 4m left of R1 Sta. 52+67
COMPLETION ELEVATION: -23.2m (MSL)
END DATE: 10/28/98

DEPTH (m)	ELEVATION (m)	SOIL TYPE	SAMPLER	BLOW COUNT	MATERIAL DESCRIPTION	STRATUM NO.
					GROUND ELEVATION: 8.3m (MSL) (0.0m)	
2	6			46	ARTIFICIAL FILL (af)	
				54	PAVEMENT, 125 mm Asphalt Concrete over 83 mm of Aggregate Base (0.3m)	II
4	4			57	SEDIMENTARY DEPOSITS (Qs)	
				73	Silty Fine SAND (SM), dense,dark yellowish brown, moist (3.0m)	III
6	2			85	Fine SAND with silt (SP-SM), dense to very dense, dark yellowish brown, moist Estimated ?? (7.0m)	
8	0			50/15cm	with some low plasticity clay (8.1m)	IV
				82	Silty Fine SAND (SM), dense to very dense, dark yellowish brown	
10	-2			80/15cm	faint bedding, thinly bedded to laminated	
				80	(13.7m)	
12	-4			82	Silty Fine SAND (SM), very dense, brown (15.2m)	V
				80	Lean CLAY with sand (CL), hard, gray	
14	-6			50/10cm	with abundant yellowish brown mottles and streaks, moist (18.3m)	VI
				49	slight increase in fine sand content, below 18.0m	
16	-8			50/5cm	Sandy Lean CLAY (CL); hard, gray (19.8m)	VII
				88	Clayey SAND (SC) to Silty CLAY with SAND (CL-ML)(21.3m) very dense, yellowish brown, with sandstone fragments	VIII
18	-10			Ref/5cm	Sandy SILT (ML), hard, yellowish brown (23.2m)	IX
20	-12				Fine SAND with silt (SP-SM), very dense, yellowish brown, moist (24.4m)	X
				100-17	FRANCISCAN FORMATION (JKf)	XI
22	-14			100-18	SANDSTONE (Greywacke) (Rs), dark yellowish brown, moderately weathered (26.9m)	XII
				100-64	SANDSTONE (Greywacke) (Rs) and SILTSTONE (Rs) (7:1), bedding dipping 45 degrees, weathering limited to fractures (27.4m)	XIII
24	-16			100-60	SANDSTONE (Greywacke) (Rs), gray, fresh, hard (29.0m)	XIV
				100-36	SANDSTONE (Greywacke) (Rs) and SILTSTONE (Rs) (3:1), bedding dipping 40 degrees, fresh, weathering limited to fractures, well indurated	
26	-18				TOTAL DEPTH: 31.6m BACKFILLED WITH Cement Grout	

Note: Refer to multi-page logs presented in the YBI wide characterization report for detailed soil descriptions

CPT 98C-127

COORDINATES: E1636002 N647242
CA State Plane Zone 3, NAD83, Meters
GROUND ELEVATION: 7.7m (MSL)
START DATE: 10/22/98

STATION: 1m right of R1 Sta. 52+63
COMPLETION ELEVATION: -10.5m (MSL)
CONE END AREA: 15.00 sq. cm (Area Ratio =. 0.66)

CONTRACT NO. 04-0V2604

CONTRACT CHANGE ORDER NO 73

SHEET 20a OF 250

ROBERT PRICE / SARA MOHAN — GEOTECHNICAL DESIGN OVERSIGHT	DRAWN BY	J. PALMER	B. SCHELL — FIELD INVESTIGATION	PREPARED FOR THE STATE OF CALIFORNIA DEPARTMENT OF TRANSPORTATION	PROJECT ENGINEER
	CHECKED BY	M. KAFUSKAN, R. JIE, S. SICILIANO, S. VARATHARAJ	DATE SEE ABOVE		

BRIDGE NO.	SAN FRANCISCO OAKLAND BAY BRIDGE EAST SPAN SEISMIC SAFETY PROJECT
34-0008 R	YBI EB ON-RAMP STRUCTURE (INITIAL)
KM POST 12.8 ▲	LOG OF TEST BORINGS NO. 6
POINT MILE	

ORIGINAL SCALE IN CENTIMETERS FOR REDUCED PLANS 0 1 2 3 4 5 6 7 8 9 10

DISREGARD PRINTS BEARING EARLIER REVISION DATES → REVISION DATES (PREVIOUS STAGE ONLY)

CU 04251 EA 012051	SHEET	OF
	10	15

CONSISTENCE CLASSIFICATION FOR SOILS

According to the Standard Penetration Test

Penetration Index (Blows / Ft)	Granular	Cohesive
0-4	Very Loose	Very Soft
5-9	Loose	Soft
10-19	Slightly compact	Stiff
20-34	Compact	Very Stiff
35-69	Dense	Hard
>70	Very Dense	Very Hard

NOTE: Classification of earth material as shown on this sheet is based upon field inspection and is not to be construed to imply mechanical analysis

LEGEND OF EARTH MATERIALS

LEGEND OF BORING OPERATIONS

WEATHERING DESCRIPTORS

[illegible]

ROCK HARDNESS/ STRENGTH DESCRIPTORS

Alphanumeric descriptor	Descriptor	Criteria
H1	Extremely hard	Core, fragment, or exposure cannot be scratched with knife or sharp pick. Can only be chipped with repeated heavy hammer blows.
H2	Very hard	Cannot be scratched with knife or sharp pick. Core of fragment breaks with repeated heavy hammer blows.
H3	Hard	Can be scratched with knife or sharp pick with difficulty (heavy pressure). Heavy hammer blow required to break specimen.
H4	Moderately hard	Can be scratched with knife or sharp pick with light or moderate pressure. Core or fragment breaks with moderate hammer blow.
H5	Moderately soft	Can be grooved 1/16 inch (2 mm) deep by knife or sharp pick with moderate or heavy pressure. Core or fragment breaks with light hammer blow or heavy manual pressure.
H6	Soft	Can be grooved or gouged easily by knife or sharp pick with light pressure, can be scratched with fingernail. Breaks with light to moderate manual pressure.
H7	Very soft	Can be readily indented, grooved or gouged with fingernail, or carved with a knife. Breaks with light manual pressure.

Any bedrock unit softer than H7, very soft, is to be described using USBR 5000 consistency descriptors.

Note: Although "sharp pick" is included in these definitions, descriptions of ability to be scratched, grooved or gouged by a knife is the preferred criteria.

FRACTURE DENSITY

FRACTURE DENSITY - Based on the spacing of all natural fractures in an exposure or core recovery lengths in boreholes; exclude mechanical breaks, shears, and shear zones; however shear-distributed zones (fracturing outside the shear) are included. Descriptors for fracture density apply to all rock exposures such as tunnel walls, dozer trenches, outcrops, or foundation cut slopes and inverts, as well as boreholes. Descriptive criteria presented below are based on borehole cores where lengths are measured along the core axis. For other exposures the criteria is distance measured between fractures (size of blocks).

UNFRACTURED (FD0): No fractures.

VERY SLIGHTLY FRACTURED (FD1): Core recovered mostly in lengths greater than 3 feet (1 m)

SLIGHTLY TO VERY SLIGHTLY FRACTURED (FD2)*

SLIGHTLY FRACTURED (FD3): Core recovered mostly in lengths from 1 to 3 feet (300 to 1000 mm) with few scattered lengths less than 1 foot (300 mm) or greater than 3 feet (1000 mm).

MODERATELY TO SLIGHTLY FRACTURED (FD4)*

MODERATELY FRACTURED (FD5): Core recovered mostly in 0.3 to 1.0 foot (100 to 300 mm) lengths with most lengths about 0.6 foot (200 mm)

INTENSELY TO MODERATELY FRACTURED (FD6)*

INTENSELY FRACTURED (FD7): Lengths average from 0.1 to 0.3 foot (30 to 100 mm) with scattered fragmented intervals. Core recovered mostly in lengths less than 0.3 foot (100 mm).

VERY INTENSELY TO INTENSELY FRACTURED (FD8)*

VERY INTENSELY FRACTURED (FD9): Core recovered mostly as chips and fragments with a few scattered short core lengths.

* Combinations of fracture densities (e.g. Very Intensely to Intensely Fractured or Moderately to Slightly Fractured) are used where equal distribution of both fracture density characteristics are present over a significant interval or exposure, or where characteristics are "in between" the descriptor definitions.

BEDDING, FOLIATION, OR FLOW TEXTURE DESCRIPTORS

Descriptors	Thickness / Spacing
Massive	Greater than 10 ft (3 m)
Very thickly (bedded, foliated, or banded)	3 to 10 ft (1 to 3 m)
Thickly	1 to 3 ft (300 mm to 1 m)
Moderately	0.3 to 1 ft (100 to 300 mm)
Thinly	0.1 to 0.3 ft (30 to 100 mm)
Very thinly	0.03 (3/8 in) to 0.1 ft (10 to 30 mm)
Laminated (intensely foliated or banded)	Less than 0.03 ft (3/8 in) (<10 mm)

RQD LOGGING

after Deere & Deere, 1969

PLAN
1" = 50'

As-built Log of Test Borings sheet is considered an information document only. As such, the State of California registration seal with signature, license number, and registration certificate expiration date will not be required. This drawing is available and presented only for the convenience of any bidder, contractor, or other interested party.

DIST	COUNTY	ROUTE	KILOMETER POST- TOTAL PROJECT	Sheet No.	Total sheets
04	SF	80		11	15

YBI EB ON-RAMP STRUCTURE (INITIAL)

AS-BUILT LOG OF TEST BORINGS NO. 1

The State of California or its officers or agents shall not be responsible for the accuracy and completeness of electronic copies of this plan sheet.

CU: 04251
EA: 012051
BRIDGE NO. 34-0006 R

DIST	COUNTY	ROUTE	POST MILES TOTAL PROJECT	SHEET NO	TOTAL SHEETS
04	SF	80		132	137

REGISTERED ENGINEERING GEOLOGIST

PLANS APPROVAL DATE

REGISTERED GEOLOGIST — CERTIFIED ENGINEERING GEOLOGIST — STATE OF CALIFORNIA

NOTES

1. All elevations shown refer to Mean Lower Low Water (M.L.L.W.) Datum = 0.0. To convert M.L.L.W. elevations to Mean Sea Level (M.S.L.) Datum of 1929, add 3.1 feet.
2. All Standard Penetration Tests for boring 95-1 were performed using N-size rod.
3. Rock Quality Designation, Weathering, Hardness, Fracture Density and Bedding Thickness descriptors, as shown on this plate, were used to describe all rock core from borings drilled in 1995. Descriptors were determined in the field in accordance with the United States Department of the Interior, Bureau of Reclamation, Engineering Geology, Field Manual.
4. Rock Quality Designation (RQD) was logged using Bx size core diameter @ Boring 95-1. Both recovery and RQD may be slightly lower than on NX or HQ size core diameter.
5. Shear wave velocity data and reports for boring 95-1 are available for review through the Engineering Service Center, Office of Structural Foundations, Geotechnical Support Branch, at the Transportation Laboratory, 5900 Folsom Blvd., Sacramento, CA 95819.
6. Laboratory test data from boring 95-1 are available for review through the Engineering Service Center, Office of Structural Foundations, Geotechnical Support Branch, at the Transportation Laboratory, 5900 Folsom Blvd., Sacramento, CA 95819.
7. Dilatometer (DT) data for tests performed at boring 95-1 are available for review through the Engineering Service Center, Office of Structural Foundations, Structure Foundations Branch, at the Transportation Laboratory, 5900 Folsom Blvd., Sacramento, CA 95819.
8. CPT data for tests performed at borings 95-2, 95-3, 95-4, 95-5, 95-6, 95-7, 95-8, 95-9, and 95-10 are available for review through the Engineering Service Center, Office of Structural Foundations, Structure Foundations Branch, at the Transportation Laboratory, 5900 Folsom Blvd., Sacramento, CA 95819.
9. Soil description/modifiers: Trace = <5%
   Some = 5-12%
   With = >12%
10. Although no ground water measurements are shown in the Caltrans test borings, the proximity to the Pacific Ocean and the San Francisco Bay should imply that free ground water may be anticipated at or near sea level or about elevation "0". Additionally, this ground water is probably subject to tidal variance.

ENGINEERING SERVICE CENTER	STRUCTURE FOUNDATIONS	FIELD INVESTIGATION BY:	State of CALIFORNIA DEPARTMENT OF TRANSPORTATION	DIVISION OF STRUCTURES STRUCTURE DESIGN	BRIDGE NO. 34-0004 POST MILE 7.5/8.0	SAN FRANCISCO-OAKLAND BAY BRIDGE-EAST VIADUCT EARTHQUAKE RETROFIT PROJECT NO. 19 LOG OF TEST BORINGS 1 OF 13
DRAWN BY: Jose Garzam 9/95		J. LLOQUIAN		CU: 04 EA: 04347		
CHECKED BY						

ORIGINAL SCALE IN INCHES FOR REDUCED PLANS

DISREGARD PRINTS BEARING EARLIER REVISION DATES

REVISION DATES (PRELIMINARY STAGE ONLY)

SHEET OF

CONTRACT NO. 04-012024

CONTRACT CHANGE ORDER NO. 73

SHEET 276 OF 280

DIST	COUNTY	ROUTE	POST MILES TOTAL PROJECT	SHEET NO	TOTAL SHEETS
04	SF	80		133	137

PLANS APPROVAL DATE

THE STATE OF CALIFORNIA OR ITS OFFICERS OR AGENTS SHALL NOT BE RESPONSIBLE FOR THE ACCURACY OR COMPLETENESS OF ELECTRONIC COPIES OF THIS PLAN SHEET.

CONTRACT NO. 04-0A1404

CONTRACT CHANGE ORDER NO. 73

SHEET 277 OF 290

FOR PLAN VIEW SEE "LOG OF TEST BORINGS 1 OF 13"

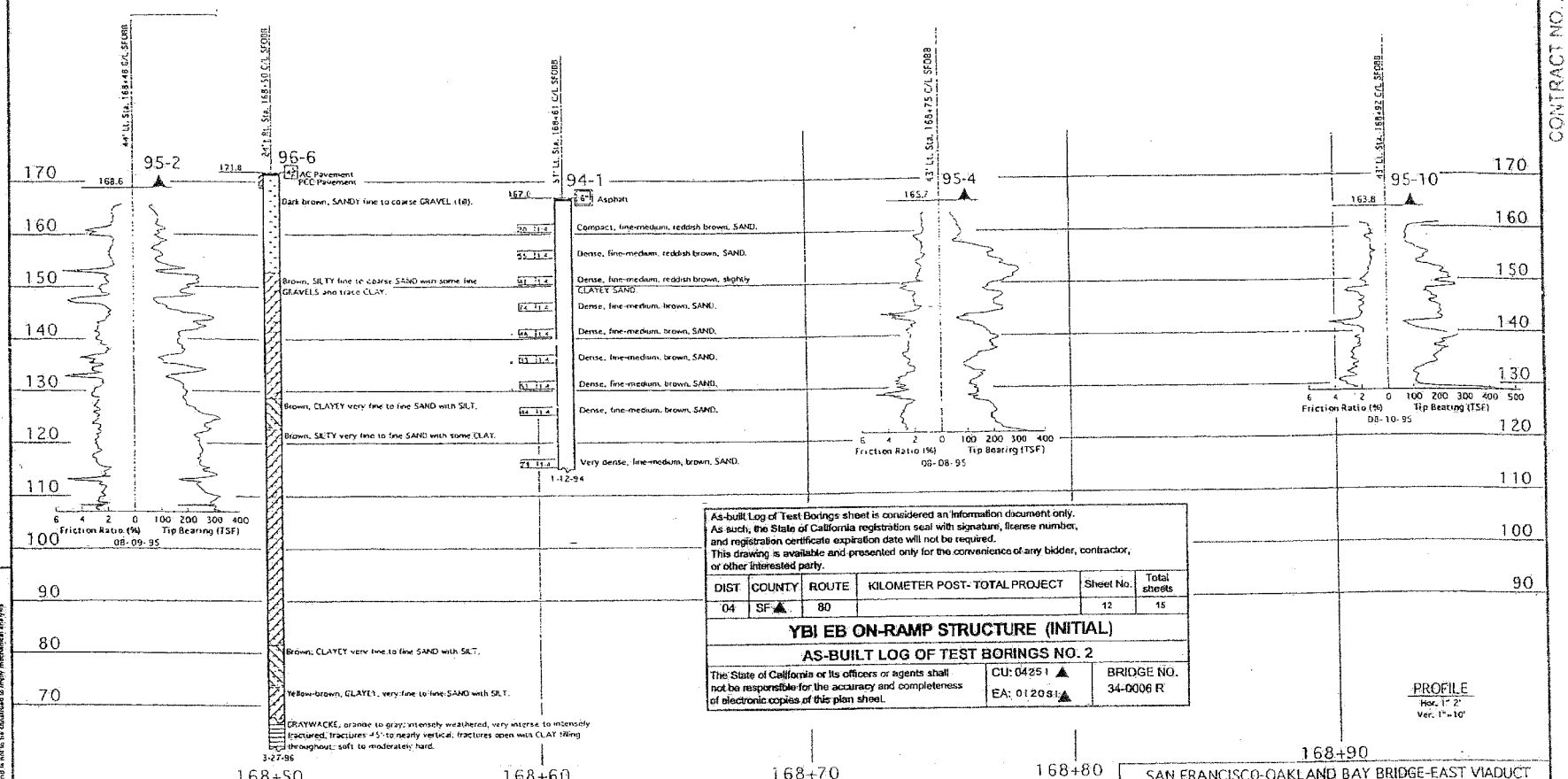

As-built Log of Test Borings sheet is considered an information document only. As such, the State of California registration seal with signature, license number, and registration certificate expiration date will not be required. This drawing is available and presented only for the convenience of any bidder, contractor, or other interested party.

DIST	COUNTY	ROUTE	KILOMETER POST- TOTAL PROJECT	Sheet No.	Total sheets
04	SF	80		12	15

YBI EB ON-RAMP STRUCTURE (INITIAL)

AS-BUILT LOG OF TEST BORINGS NO. 2

The State of California or its officers or agents shall not be responsible for the accuracy and completeness of electronic copies of this plan sheet.

CU: 04251
EA: 012081

BRIDGE NO. 34-0006 R

PROFILE
Hor. 1" = 2'
Ver. 1" = 10'

SAN FRANCISCO-OAKLAND BAY BRIDGE-EAST VIADUCT

EARTHQUAKE RETROFIT PROJECT NO. 19

LOG OF TEST BORINGS 4 OF 13

ENGINEERING SERVICE CENTER | STRUCTURE FOUNDATIONS

DRAWN BY [redacted] 4-96

CHECKED BY

FIELD INVESTIGATION BY: T. CROSBY

State of CALIFORNIA DEPARTMENT OF TRANSPORTATION

DIVISION OF STRUCTURES
STRUCTURE DESIGN

BRIDGE NO. 34-0006
POST MILE 7.6/8.0

CU: [redacted]
EA: 043471

ORIGINAL SCALE IN INCHES FOR REDUCED PLANS 0 1 2 3

DISREGARD PRINTS BEARING EARLIER REVISION DATES

REVISION DATES (PRELIMINARY STAGE ONLY)

SHEET | BY

LEGEND OF BORING OPERATIONS

LEGEND OF EARTH MATERIALS

CONSISTENCY CLASSIFICATION
According to the Standard Penetration Test

Description	Approximate Blows/Foot	Consistency
0-4	Very Loose	Very Soft
5-10	Loose	Soft
11-30	Medium Compact	Firm
31-50	Compact	Very Stiff
51-80	Dense	Hard
81+	Very Dense	Very Hard

NOTE: Classification of earth materials as shown on this sheet is based upon field inspection and is not to be construed to imply mechanical analysis.

As-built Log of Test Borings sheet is considered an information document only.
As such, the State of California registration seal with signature, license number, and registration certificate expiration date will not be required.
This drawing is available and presented only for the convenience of any bidder, contractor, or other interested party.

DIST	COUNTY	ROUTE	KILOMETER POST- TOTAL PROJECT	Sheet No.	Total sheets
04	SF ▲	80		13	15

YBI EB ON-RAMP STRUCTURE (INITIAL)

AS-BUILT LOG OF TEST BORINGS NO. 3

The State of California or its officers or agents shall not be responsible for the accuracy and completeness of electronic copies of this plan sheet.

CU: 0425 I ▲
EA: 0120S1 ▲

BRIDGE NO. 34-0006R

FOR PLAN VIEW SEE "LOG OF TEST BORINGS 1 OF 13"

DIST	COUNTY	ROUTE	POST MILES TOTAL PROJECT	SHEET NO.	TOTAL SHEETS
04	SF	80		134	137

R/W FOR 28
No. 8-27-97
Ex.
REGISTERED GEOLOGIST / CERTIFIED ENGINEERING GEOLOGIST / STATE OF CALIFORNIA

PLANS APPROVAL DATE

THE STATE OF CALIFORNIA OR ITS OFFICERS OR AGENTS SHALL NOT BE RESPONSIBLE FOR THE ACCURACY OR COMPLETENESS OF ELECTRONIC COPIES OF THIS PLAN SHEET.

47'± Lt. Sta. 169+04± C/L SFOBB

45'± Rt. Sta. 169+10± C/L SFOBB

45' Lt. Sta. 169+09 C/L SFOBB

45' Lt. Sta. 169+78 C/L SFOBB

96-3

96-9

95-3

95-9

EL 2.5

EL 4.2

EL 1.6

EL 4.2

170
160
150
140
130
120
110
100
90
80
70
60
50

AC Pavement

Slightly compact, brown, slightly SILTY fine SAND, moist.
Dense, brown, slightly SILTY fine SAND, moist.

Compact, brown, poorly graded, fine SAND with trace SILT, moist.

Compact, brown, poorly graded, fine SAND with trace SILT, moist.

Compact, brown, poorly graded, fine SAND with trace SILT, moist.

Dense, brown, poorly graded, fine SAND with trace SILT, moist.

Very dense, brown, fine SAND, poorly graded with trace SILT, slightly moist.

Very dense, brown, fine SAND, poorly graded with trace SILT, slightly moist.

Very dense, brown, SILTY fine SAND, poorly graded, very moist to wet.

Compact, brown, SILTY fine SAND, poorly graded, wet.

Very dense, brown, SILTY fine SAND, poorly graded, wet.

Compact, brown, SILTY CLAYEY fine SAND, poorly graded, wet.
Gray-brown, SILTY fine SANDY CLAY.
Yellow, CLAYEY SILTY fine SAND.

GRAYWACKE, brown to gray, decomposed to very intensely weathered, very intensely to intensely fractured, fractures open, filled with CLAY, soft to moderately hard.

REC=88%
RQD=0%

3-29-96

Dark brown, SILTY CLAYEY fine to coarse SAND and GRAVEL with roots, grass and leaves.

Compact, brown, SILTY fine SAND, fill, wet.

Dense, brown, SILTY fine SAND, with traces of CLAY, poorly graded, subrounded to rounded, dry.

Very dense, tan-brown, SILTY medium to fine SAND, with some CLAY, poorly graded, subrounded to rounded, dry.

Friction Ratio (%) 6 4 2 0 — Tip Bearing (TSF) 100 200 300 400
08-08-95

Dense, tan-brown with black speckles, SILTY CLAYEY fine SAND, poorly graded, subrounded to rounded, moist.

Very dense, brown, mottled orange and black speckles, decomposed rock, fine SANDY CLAYEY SILT, yellow.

REC=100% GRAYWACKE, brown, intensely weathered, intensely fractured.
RQD=20% fractures open and dip at 45°-50°.

3-29-96

Friction Ratio (%) 10 8 6 4 2 0 — Tip Bearing (TSF) 100 200 300 400 500
08-10-95

169+00 169+25 169+50 169+75 170+00

PROFILE
Hor. 1" = 2'
Ver. 1" = 10'

SAN FRANCISCO-OAKLAND BAY BRIDGE-EAST VIADUCT

LEGEND OF BORING OPERATIONS

LEGEND OF EARTH MATERIALS

CONSISTENCY CLASSIFICATION FOR SOILS

According to the Standard Penetration Test

Penetration (blows / ft)	Granular	Cohesive
0-4	Very Loose	Very Soft
5-9	Loose	Soft
10-19	Slightly Compact	Firm
20-34	Compact	Very Stiff
35-50	Dense	Hard
51+	Very Dense	

NOTE: Classification of earth material as shown on this sheet is based upon field inspection and is not to be construed as being mechanical analysis.

ENGINEERING SERVICE CENTER	STRUCTURE FOUNDATIONS	FIELD INVESTIGATION BY:	State of CALIFORNIA DEPARTMENT OF TRANSPORTATION	DIVISION OF STRUCTURES	BRIDGE NO. 34-0006	EARTHQUAKE RETROFIT PROJECT NO. 19
DRAWN BY [illegible] 4-96		T. CROSBY		STRUCTURE DESIGN	POST MILE 7.6/8.0	LOG OF TEST BORINGS 5 OF 13
CHECKED BY						

ORIGINAL SCALE IN INCHES FOR REDUCED PLANS — 0 1 2 3

CU: 04
EA: 043471

DISREGARD PRINTS BEARING EARLIER REVISION DATES: —

REVISION DATES (PRELIMINARY STAGE ONLY) — SHEET OF

CONTRACT CHANGE ORDER NO. 73

SHEET 276 OF 284

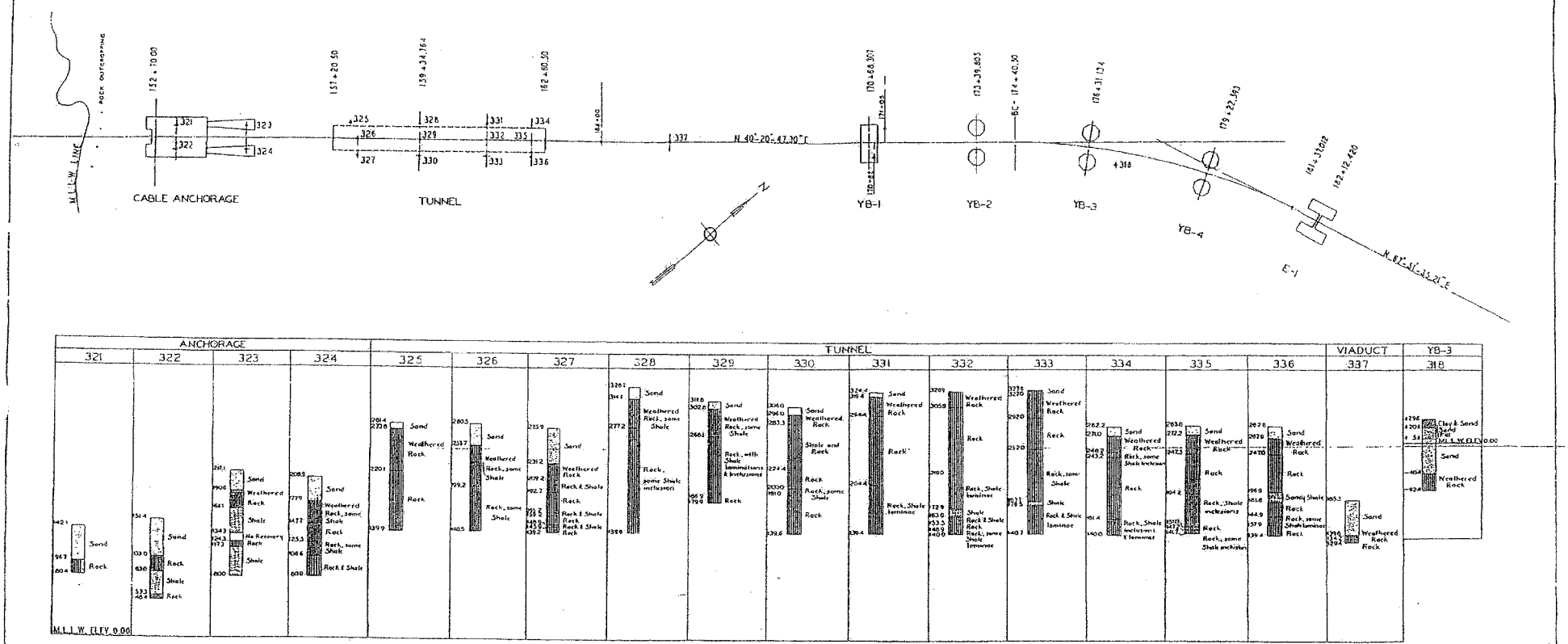

As-built Log of Test Borings sheet is considered an information document only.
As such, the State of California registration seal with signature, license number, and registration certificate expiration date will not be required.
This drawing is available and presented only for the convenience of any bidder, contractor, or other interested party.

DIST	COUNTY	ROUTE	KILOMETER POST-TOTAL PROJECT	Sheet No.	Total sheets
04	SF.▲	80		14	15

YBI EB ON-RAMP STRUCTURE (INITIAL)

AS-BUILT LOG OF TEST BORINGS NO. 4

The State of California or its officers or agents shall not be responsible for the accuracy and completeness of electronic copies of this plan sheet.

CU: 04251 ▲
EA: 01205 I ▲

BRIDGE NO. 34-0006 R

STATE OF CALIFORNIA
DEPARTMENT OF PUBLIC WORKS
SAN FRANCISCO-OAKLAND BAY BRIDGE
YERBA BUENA CROSSING
BORINGS

SCALE IN FEET

CONTRACT NO. 5 SUP. DWG. NO. 1
JANUARY - 1933

Date	Revision	By	Chkd
7-30-39	Corrected for Construction Revisions	JLC	

CONTRACT NO. 04-0120R-4

CONTRACT CHANGE ORDER NO. 13

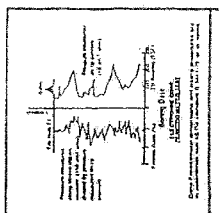

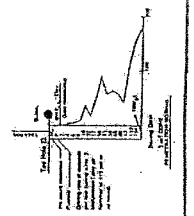

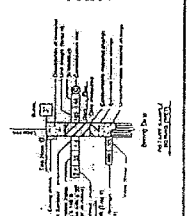

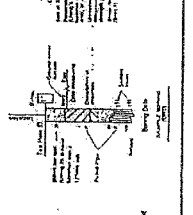

LEGEND OF EARTH MATERIALS

CONSISTENCY CLASSIFICATION FOR SOILS According to the Standard Penetration Test

NOTE: Classification of earth material as shown on this sheet is based upon field exploration and is not to be construed as imply mechanical analysis.

DIST.	COUNTY	ROUTE	POST MILES TOTAL PROJECT	SHEET NO.	TOTAL SHEETS
04	Ala	80		136	137

R. W. Fox

REGISTERED ENGINEERING GEOLOGIST

R.W. FOX No. 78 Exp. 4-31-97 REGISTERED ENGINEERING GEOLOGIST STATE OF CALIFORNIA

PLANS APPROVAL DATE

The State of California or its officers or agents shall not be responsible for the accuracy or completeness of electronic copies of this plan sheet.

LOG OF BORING NO. YB16

Elevation +95.7' Elevation of Ground Surface. (Unrevised)

SAN FRANCISCO-OAKLAND BAY BRIDGE

RESIDENT ENGINEER'S REPORT

HOLE NO. YB16

Depth to Rock Surface: +4.5'

Date of Drilling: Oct. 26 to Nov. 7, 1933.

Nature and Thickness of Deposits to Rock Surface: +95.7' to +16.5', Soft Brown Silty Sand; +16.5' to +4.5', Clayey Sand and Sandy Clay.

DRILL CORE RECORD

Length of Drilling	Core Recovered	Per Cent Recovery	Condition of Core	Character of Rock	Structural Features	Remarks

	Soft, Silty, Sand.
	(Soft, Silty, Sand. The Soil is Fairly Dry and Well Compacted. The Mass of It is Silty and Somewhat Cemented by Numerous Pockets and Streaks of Clean, Permeable, Non-Cemented, Sand also Occur; of Varying Thickness and Extent.
+44.0' +44.0'	Soft, Brown, Silty, Sand. Same as Described Above. (Sample YB16-1, 123 #/cu.ft. Average.
	Soft, Brown, Silty, Sand. Same as Described Above.
+29.0' +28.2'	Soft, Brown, Silty, Sand. Same as Described Above. (Sample YB16-2, 130#/cu.ft. Average.
	Soft, Brown, Silty, Sand. Same as Described Above.
+16.5'	Clayey Sand at +16.5'.
+10.0'	Gradual Change to a Sandy, Clay at Elevation +10.0'.
	Decomposed Rock at Elevation +6.0.
+4.5'	Top of Bedrock at Elevation +4.5'.
0.0'	(Soft, Broken, Sandstone, Brown in Color, Very Friable at Surface but Gradually Increasing in Hardness with Depth.
-9.7'	Bottom of Boring at Elevation -9.7'.

Location of Boring: Station 170 + 82 and 38' Right of Center Line of Bridge.

B.E.M.

As-built Log of Test Borings sheet is considered an information document only. As such, the State of California registration seal with signature, license number, and registration certificate expiration date will not be required. This drawing is available and presented only for the convenience of any bidder, contractor, or other interested party.

DIST	COUNTY	ROUTE	KILOMETER POST- TOTAL PROJECT	Sheet No.	Total sheets
04	SF ▲	80		15	15

YBI EB ON-RAMP STRUCTURE (INITIAL)

AS-BUILT LOG OF TEST BORINGS NO. 5

The State of California or its officers or agents shall not be responsible for the accuracy and completeness of electronic copies of this plan sheet.

CU: 04 251 ▲
EA: 012081 ▲

BRIDGE NO. 34-0006 R

CONTRACT NO. 04-012081

CONTRACT CHANGE ORDER NO. 15

SHEET 252 OF 260

ENGINEERING SERVICE CENTER	STRUCTURE FOUNDATIONS	FIELD INVESTIGATION BY:	State of CALIFORNIA DEPARTMENT OF TRANSPORTATION	DIVISION OF STRUCTURES STRUCTURE DESIGN	BRIDGE NO. 33-0025	SAN FRANCISCO-OAKLAND BAY BRIDGE EARTHQUAKE RETROFIT PROJECT NO. 2
DRAWN BY		M. LUQMAN & T. CROSBY			POST MILE	LOG OF TEST BORINGS 10 OF 17
CHECKED BY					1.15	

ORIGINAL SCALE IN INCHES FOR REDUCED PLANS

CU: 04
EA: 043441

DISREGARD PRINTS BEARING EARLIER REVISION DATES

REVISION DATES (PRELIMINARY STAGE ONLY)

SHEET 42 OF 49

STATE OF CALIFORNIA - DEPARTMENT OF TRANSPORTATION

CONTRACT CHANGE ORDER MEMORANDUM

TO: MIKE FORNER / DENNIS TURCHON	FILE: **E.A.** 04 - 0120R4
	CO-RTE-PM SF-80-12.6/13.2
FROM: BILL CASEY	**FED. NO.** ACBRIM-080-1(097)N
CCO#: **73** SUPPLEMENT#: **0** Category Code: **BZZZ**	CONTINGENCY BALANCE (incl. this change) **$121,569,501.08**
COST: **$62,958,990.00** INCREASE ☑ DECREASE ☐	HEADQUARTERS APPROVAL REQUIRED? ☑ YES ☐ NO
SUPPLEMENTAL FUNDS PROVIDED: **$0.00**	IS THIS REQUEST IN ACCORDANCE WITH ENVIRONMENTAL DOCUMENTS? ☑ YES ☐ NO
CCO DESCRIPTION: YBITS Advance Work Footing W4L	**PROJECT DESCRIPTION:** CONSTRUCT ROUTE 80 TEMP BYPASS STRUCTURE

Original Contract Time:	Time Adj. This Change:	Previously Approved CCO Time Adjustments:	Percentage Time Adjusted: (including this change)	Total # of Unreconciled Deferred Time CCO(s): (including this change)
475 Day(s)	**DEF** Day(s)	**381** Day(s)	**80** %	**8**

THIS CHANGE ORDER PROVIDES FOR:

the advance construction of numerous footings and columns for the Yerba Buena Island Transition Structures (YBITS) of the San Francisco Oakland Bay Bridge.

This contract provides for the construction of a temporary detour for both eastbound and westbound I-80 traffic that allows for the tie in of the east span of the new San Francisco Oakland Bay Bridge (SFOBB) to Yerba Buena Island. The detour will allow for the construction of the permanent structure, YBITS, that connects the signature SAS structure to Yerba Buena Island.

The construction of the transition structure is scheduled to be performed after the completion of this project. In order to advance a portion of the YBITS work and potentially allow for an early opening of the new SFOBB, the Department issued a December 25, 2006 memorandum recommending a portion of the YBITS foundation work be performed under this contract by change order. The memorandum was approved by Tony Anziano, Toll Bridge Program Manager, and Richard Land, Chief Engineer.

This change order implements the bulk of the work recommended under this memorandum. Previously executed Change Orders No. 64, No. 64 - Supplement No. 1, and No. 77 provided for the construction of a portion of Bent W3L and the construction of Bent W4L associated with the YBITS structure.

This change order provides for the construction of the remaining portion of Bent W3L and the construction of seven (7) other bents of the YBITS (Bents W3R, W4R, W5 R & L, W6 R & L and Bent W7 of the EB On-Ramp Structure. This change order also calls for miscellaneous drainage, roadway and electrical facilities to be constructed in the vicinity of the footing and column work being performed.

The only remaining work to be implemented from the December 25, 2006 memorandum, after this change order, concerns Bent W7 (excluding the EB On-Ramp Structure) that will be issued under a forthcoming change order (CCO No. 75).

Compensation for this work shall be paid as extra work at an agreed lump sum of $62,958,990.00 which shall be financed from the contract's contingency funds. A cost analysis is on file.

SWPPP, erosion control, time related overhead, placing 150 mm cast iron pipe and any video surveying costs are excluded from this change order and shall be paid separately.

Adjustment of contract time is deferred as the work may affect the controlling operation.

ADA Notice: For individuals with sensory disabilities, this document is available in alternate formats. For information call: (916) 654-6410 or TDD (916) 654-3880 or write Records and Forms Management, 1120 N Street, MS-89, Sacramento, CA 95814.

CONCURRED BY:			
Construction Engineer:	Mahantesh Anigol M.U.A.	Date	10/23/07
Bridge Engineer:	Mike Whiteside, TB Design	Date	11/28/06
Project Engineer:	Trinh Lai	Date	6/7/07
Project Manager:	Ken Terpstra	Date	6/7/07
FHWA Rep.:		Date	
Environmental:		Date	
Other (specify):	Robert Kobal, HQ Asst.Const.Coor	Date	3/14/07
Other (specify):	Bill Zanetich, Maintenance	Date	6/28/07
District Prior Approval By:		Date	
HQ (Issue Approve) By:	Ken Darby, HQ CCO Reviewer	Date	10/29/07
Resident Engineer's Signature:		Date	

10/23/07

ESTIMATE OF COST

	THIS REQUEST	TOTAL TO DATE
ITEMS	$0.00	$0.00
FORCE ACCOUNT	$0.00	$0.00
AGREED PRICE	$62,958,990.00	$62,958,990.00
ADJUSTMENT	$0.00	$0.00
TOTAL	$62,958,990.00	$62,958,990.00

FEDERAL PARTICIPATION

☐ PARTICIPATING ☐ PARTICIPATING IN PART ☐ NONE
☐ NON-PARTICIPATING (MAINTENANCE) ☑ NON-PARTICIPATING

FEDERAL SEGREGATION (if more than one Funding Source or P.I.P. type)
☑ CCO FUNDED PER CONTRACT ☐ CCO FUNDED AS FOLLOWS

FEDERAL FUNDING SOURCE	PERCENT

ADA Notice: For individuals with sensory disabilities, this document is available in alternate formats. For information call: (916) 654-6410 or TDD (916) 654-3880 or write Records and Forms Management, 1120 N Street, MS-89, Sacramento, CA 95814.

CONTRACT CHANGE ORDER

Change Requested by: Engineer

CCO 75	Suppl. No. 0	Contract No. 04 - 0120R4	Road SF-80-12.6/13.2	FED. AID LOC.: ACBRIM-080-1(097)N

To: CC MYERS INC

You are directed to make the following changes from the plans and specifications or do the following described work not included in the plans and specifications for this contract. ***NOTE: This change order is not effective until approved by the Engineer.***

Description of work to be done, estimate of quantities and prices to be paid. (Segregate between additional work at contract price, agreed price and force account.) Unless otherwise stated, rates for rental of equipment cover only such time as equipment is actually used and no allowance will be made for idle time. This last percentage shown is the net accumulated increase or decrease from the original quantity in the Engineer's Estimate.

Extra Work at Lump Sum:

Perform all work shown on the plans and specifications of Pages No. 3 through 136 of this change order for the construction of the footings and substructure of Bents W7L and W7R of the Yerba Buena Island Transition Structure (Br. No. 34-0006L/R) and the construction of Drainage System No. 1.

For this work, the Contractor shall be compensated a lump sum of $13,125,000.00. Except for the items of work specifically excluded below, this sum constitutes full and final compensation, including all markups, for all costs associated with the work of this change.

All work associated with the implementation and maintenance of the Contractor's Storm Water Pollution Prevention Plan and the placement of all permanent and temporary erosion control (including concrete washouts) shall be paid by the Department separately from this change order.

Flagging costs associated with this work shall be paid under Change Order No. 1 with these costs being paid at 50% by the Department. The remaining flagging costs are considered to be included in the lump sum payment made under this change order.

All excavated soil identified as Structure Excavation (Type H) shall be stockpiled at the excavation site in order to allow for soil testing prior to its transport to the Contractor's stockpile site at the corner of Avenue H and 9th St. on Treasure Island. Costs associated with this stockpiling, included maintenance of the pile and soil testing, are included in the agreed lump sum price of this change. Soil testing of excavated soil not identified as contaminated or hazardous, required for its delivery to the Contractor's stockpile site at the corner of Avenue H and 9th St. on Treasure Island, shall be paid separately from this change order.

The agreed lump sum price provided under this change order is based on all excavated soil being stored either on-site or a the Contractor's stockpile site at the corner of Avenue H and 9th St. on Treasure Island and having that soil incorporated back into the work as backfill. In the event the soil needs to be disposed of off-site due to it being classified as contaminated or hazardous, all transportation and disposal costs for off-site disposal shall be paid as extra work at force account under Change Order No. 126. In the event any non-contaminated soil cannot be incorporated back into the work and requires off-site disposal, all transportation and disposal costs for off-site disposal shall be paid separately from this change order.

The cost of furnishing and placing the polyurethane material for the corrugated steel pipe isolation sleeve is deferred and not included in the agreed lump sum compensation paid under this change order. Costs for this work shall be paid under a supplemental change order once the full scope of this work is determined.

The cost of furnishing and placing cement modified structural backfill and imported topsoil is deferred and not included in the agreed lump sum compensation paid under this change order. Costs for this work shall be paid under a supplemental change order once the full scope of this work is determined.

Cost of constructing an access ramp and work area on the north side of the existing structure is included in the agreed lump sum compensation paid under this change order. This access and work area shall be left in place for future use by the Department after the completion of the work.

CONTRACT CHANGE ORDER

Change Requested by: Engineer

CCO 75	Suppl. No. 0	Contract No. 04 - 0120R4	Road SF-80-12.6/13.2	FED. AID LOC.: ACBRIM-080-1(097)N

Work associated with the development of integrated shop drawings shall be paid separately from this change order.

Total Cost of Extra Work at Lump Sum $13,125,000.00

Section 5-1.05 "Areas For Contractor's Use" listed under the specifications of this change order shall not be applicable to the work of this change.

All payment clauses contained within the specifications of this change order are superseded by the agreed lump sum payment specified above.

Estimated Cost: Increase ☑ Decrease ☐ **$13,125,000.00**

By reason of this order the time of completion will be adjusted as follows: Deferred

Submitted by

Signature	Resident Engineer BILL CASEY	Date 3-27-08

Approval Recommended by

Signature	SFOBB Construction Manager MIKE FORNER	Date 3/28/08

Engineer Approval by

Signature Mike Forner	SFOBB Construction Manager MIKE FORNER	Date 4-14-08

We the undersigned contractor, have given careful consideration to the change proposed and agree, if this proposal is approved, that we will provide all equipment, furnish the materials, except as may otherwise be noted above, and perform all services necessary for the work above specified, and will accept as full payment therefor the prices shown above.

NOTE: If you, the contractor, do not sign acceptance of this order, your attention is directed to the requirements of the specifications as to proceeding with the ordered work and filing a written protest within the time therein specified.

Contractor Acceptance by

Signature	(Print name and title) DANIEL E. HAMICK, PRESIDENT	Date 4/09/08

Contract No. 04-0120R4
04-SF-80 (KP 12.6/13.2)

SPECIAL PROVISIONS
for
CONTRACT CHANGE ORDER No. 75

Date 05-25-07

CONTRACT NO. 04-0120R4

CONTRACT CHANGE ORDER NO 75

SHEET 3 OF 136

CONTRACT NO. 04-0120R4
(Contract Change Order No. 75)

The special provisions contained herein have been prepared by or under the direction of the following Registered Persons.

STRUCTURES

REGISTERED CIVIL ENGINEER

REGISTERED PROFESSIONAL ENGINEER
Jal N. Birdy
No. 41547
Exp. 12-31-07
CIVIL
STATE OF CALIFORNIA

CONTRACT NO. 04-0120R4

CONTRACT CHANGE ORDER NO 75

SHEET 4 OF 136

CONTRACT NO. 04-0120R4
(Contract Change Order No. 75)

The special provisions contained herein have been prepared by or under the direction of the following Registered Persons.

HIGHWAYS

Hong K. Tay 5/25/07

REGISTERED CIVIL ENGINEER

CONTRACT NO. 04-0120R4

CONTRACT CHANGE ORDER NO 75

SHEET 5 OF 136

CONTRACT NO. 04-0120R4
(Contract Change Order No. 75)

The special provisions contained herein have been prepared by or under the direction of the following Registered Persons.

ENVIRONMENTAL ENGINEERING

Charles D. Smith

REGISTERED CIVIL ENGINEER

CONTRACT NO. 04-0120R4

CONTRACT CHANGE ORDER NO 75

SHEET 6 OF 136

CONTRACT NO. 04-0120R4
(Contract Change Order No.75)

The special provisions contained herein have been prepared by or under the direction of the following Licensed Person.

LANDSCAPE

LICENSED LANDSCAPE ARCHITECT

LICENSED LANDSCAPE ARCHITECT
Laurie J. Smith & Lic. No. 4966
Signature
8-31-08
Expiration
5-22-07
Date
STATE OF CALIFORNIA

CONTRACT NO. 04-0120R4

CONTRACT CHANGE ORDER NO 75

SHEET 7 OF 136

CONTRACT NO. 04-0120R4
(Contract Change Order No. 75)

The special provisions contained herein have been prepared by or under the direction of the following Registered Person.

WATER POLLUTION CONTROL

REGISTERED CIVIL ENGINEER

REGISTERED PROFESSIONAL ENGINEER
Faramarz Farahani
No. C 45671
Exp 12/31/08
CIVIL
STATE OF CALIFORNIA

CONTRACT NO. 04-0120R4

CONTRACT CHANGE ORDER NO 75

SHEET 8 OF 136

TABLE OF CONTENTS

SCOPE OF WORK (CCO No. 75) 4
Standard Plans List 5
ENGINEER'S ESTIMATE 6
5-1.01 WORKING DRAWINGS 7
5-1.02 INTEGRATED SHOP DRAWINGS 9
5-1.03 PAYMENTS 10
5-1.04 PROJECT INFORMATION 10
5-1.05 AREAS FOR CONTRACTOR'S USE 11
5-1.06 UTILITIES 12
5-1.07 SANITARY PROVISIONS 12
5-1.08 BRIDGE TOLLS 12
5-1.09 PERMITS AND LICENSES 12
5-1.10 HAZARDOUS MATERIAL, GENERAL 13
APPLICABLE RULES AND REGULATIONS 13
PERMITS AND LICENSES 14
SITE HEALTH AND SAFETY PLAN 14
SAFETY TRAINING 14
PAYMENT 15
5-1.11 ENVIRONMENTALLY SENSITIVE AREAS (GENERAL) 15
A. ENVIRONMENTALLY SENSITIVE AREAS 15
B. AREA TO BE MONITOR (ATM) 17
C. SPECIAL CONSTRUCTION AREA (SCA) 18
5-1.12 SOUND CONTROL REQUIREMENTS 18
SECTION 6. (BLANK) 19
SECTION 7. (BLANK) 19
SECTION 8. MATERIALS 19
SECTION 8-1. MISCELLANEOUS 19
8-1.01 SUBSTITUTION OF NON-METRIC MATERIALS AND PRODUCTS 19
8-1.02 ENGINEERING FABRICS 26
SECTION 8-2. CONCRETE 26
8-2.01 PORTLAND CEMENT CONCRETE 26
8-2.02 CORROSION CONTROL FOR PORTLAND CEMENT CONCRETE 28
SECTION 8-3. WELDING 29
8-3.01 WELDING 29
GENERAL 29
WELDING QUALITY CONTROL 33
PAYMENT 35
SECTION 9. DESCRIPTION OF BRIDGE WORK 35
SECTION 10. CONSTRUCTION DETAILS 36
SECTION 10-1. GENERAL 36
10-1.01 ORDER OF WORK 36
10-1.02 WATER POLLUTION CONTROL 36
COST BREAK-DOWN 37
PAYMENT 39

CONTRACT NO. 04-0120R4

CONTRACT CHANGE ORDER NO 75

SHEET 9 OF 136

10-1.03 NON-STORM WATER DISCHARGES 41
MARINE EXCAVATION DEWATERING 41
LAND-BASED EXCAVATION DEWATERING 42
EFFLUENT TREATMENT FACILITY 45
INSPECTION 46
SPILL CONTINGENCY 47
LIQUIDS, RESIDUES AND DEBRIS 47
PAYMENT 47
10-1.04 TEMPORARY DRAINAGE INLET PROTECTION 47
10-1.05 TEMPORARY COVER 54
10-1.06 TEMPORARY CONCRETE WASHOUT FACILITY 57
10-1.07 TEMPORARY SILT FENCE 60
10-1.08 TEMPORARY CONSTRUCTION ENTRANCE 62
10-1.09 OBSTRUCTIONS 65
10-1.10 DUST CONTROL 66
10-1.11 MAINTAINING TRAFFIC 67
10-1.12 EXISTING HIGHWAY FACILITIES 67
REMOVE ABADON UTILITY AND NON-HIGHWAY FACILITIES 67
BRIDGE REMOVAL (PORTION) 68
10-1.13 CLEARING AND GRUBBING 68
10-1.14 EARTHWORK 69
HAZARDOUS MATERIAL EXCAVATION 69
SAMPLING AND ANALYSIS 70
SOLDIER PILE WALL EARTHWORK 71
10-1.15 SOLDIER PILE WALL 72
10-1.16 SOIL NAIL WALL EARTHWORK 72
10-1.17 SOIL NAIL ASSEMBLY 75
WORKING DRAWINGS 75
MATERIALS 76
CONSTRUCTION 77
TESTING 79
MEASUREMENT 81
PAYMENT 81
10-1.18 GEOCOMPOSITE DRAIN SYSTEMS 81
10-1.19 STRUCTURE BACKFILL (BRIDGE) (CEMENT MODIFIED) 83
10-1.20 MOVE-IN/MOVE-OUT (EROSION CONTROL) 83
10-1.21 EROSION CONTROL (TYPE B) 84
MATERIALS 84
INSTALLATION 87
CERTIFICATE OF COMPLIANCE 88
MEASUREMENT AND PAYMENT 88
10-1.22 PILING 88
GENERAL 88
STEEL SOLDIER PILING 89
MEASUREMENT AND PAYMENT (PILING) 89
10-1.23 DRILLED HOLES 89
10-1.24 CONCRETE STRUCTURES 90

CONTRACT NO. 04-0120R4

CONTRACT CHANGE ORDER NO 75

SHEET 10 OF 136

AGGREGATE GRADINGS 90
MEASUREMENT AND PAYMENT 90
10-1.25 REINFORCEMENT 91
MEASUREMENT AND PAYMENT 91
10-1.26 ALTERNATIVE PIPE 91
10-1.27 PLASTIC PIPE 91
10-1.28 REINFORCED CONCRETE PIPE 91
10-1.29 CORRUGATED METAL PIPE 92
10-1.30 CORRUGATED STEEL PIPE ISOLATION SLEEVE 92
PAYMENT 92
10-1.31 WELDED STEEL PIPE 93
10-1.32 BRIDGE DECK DRAINAGE SYSTEM 93

CONTRACT NO. 04-0120R4

CONTRACT CHANGE ORDER NO 75

SHEET 11 OF 136

SCOPE OF WORK (CCO No. 75)

Scope of the work for Contract Change Order No. 75 for the construction consists of the following facilities:

1. Bridge No. 34-0006L/R: Only Bent W7 of the westbound and eastbound Yerba Buena Island Transition Structures as shown on the plans
2. Miscellaneous roadway work as shown on the plans

CONTRACT NO. 04-0120R4

CONTRACT CHANGE ORDER NO 75

SHEET 12 OF 136

Standard Plans List

The Standard Plan sheets applicable to this contract include, but are not limited to those indicated below. Applicable Revised Standard Plans (RSP) and New Standard Plans (NSP) indicated below are included in the project plans as individual Standard Plan sheets.

GENERAL ROAD WORK (Miscellaneous)

A10A	**Acronyms and Abbreviations (A-L)**
A10B	**Acronyms and Abbreviations (M-Z)**
A10C	**Symbols (Sheet 1 of 2)**
A10D	**Symbols (Sheet 2 of 2)**
A62B	**Limits of Payment for Excavation and Backfill – Bridge Surcharge and Wall**
A62C	**Limits of Payment for Excavation and Backfill - Bridge**

GENERAL ROAD WORK (Drainage)

D73	**Drainage Inlets**
D74C	**Drainage Inlets Details**

BRIDGE

B0-1	**Bridge Details**
B0-3	**Bridge Details**
B3-9	**Retaining Wall Details No. 2**
B7-6	**Deck Drains – Types D-1 and D-2**

CONTRACT NO. 04-0120R4

CONTRACT CHANGE ORDER NO 75

SHEET 13 OF 136

ENGINEER'S ESTIMATE

Item	Item Code	Item	Unit of Measure	Estimated Quantity
1	074019A	PREPARE AMENDMENT TO STORM WATER POLLUTION PREVENTION PLAN	LS	LUMP SUM
2	074020	WATER POLLUTION CONTROL	LS	LUMP SUM
3	074021A	NON STORM WATER DISCHARGE	LS	LUMP SUM
4	074029	TEMPORARY SILT FENCE	M	80
5	074032	TEMPORARY CONCRETE WASHOUT FACILITY	EA	2
6	074033	TEMPORARY CONSTRUCTION ENTRANCE	EA	1
7	074034	TEMPORARY COVER	M2	800
8 B	157560	BRIDGE REMOVAL (PORTION)	LS	LUMP SUM
9	160101	CLEARING AND GRUBBING	LS	LUMP SUM
10 B	192003	STRUCTURE EXCAVATION (BRIDGE)	M3	7700
11 B	192023	STRUCTURE EXCAVATION (TYPE H)	M3	300
12 B	193007A	STRUCTURE BACKFILL (BRIDGE) (CEMENT MODIFIED)	M3	6100
13 B	197060	SOIL NAIL ASSEMBLY	M	4640
14	200101	IMPORTED TOPSOIL	M3	810
15	203003	STRAW (EROSION CONTROL)	TONN	0.6
16	203010	EROSION CONTROL (TYPE B)	M2	1350
17	203014	FIBER (EROSION CONTROL)	KG	50
18	203021	FIBER ROLLS	M	110
19	203024	COMPOST (EROSION CONTROL)	M3	0.5
20	203026	MOVE -IN/MOVE-OUT (EROSION CONTROL)	EA	2
21	203045	PURE LIVE SEED (EROSION CONTRCL)	KG	10
22	203061	STABILIZING EMULSION (EROSION CONTROL)	KG	20
23 B	490306A	FURNISH AND INSTALL SOLDIER PILES (W 360 X 108)	M	17
24 B	490566	FURNISH STEEL PILING (HP 360 X 132)	M	2230
25 B	490567	DRIVE STEEL PILE (HP 360 X 132)	EA	159
26 B	499032A	610 MM DRILLED HOLE (SOLDIER PILES)	M	14
27	510502	MINOR CONCRETE (MINOR STRUCTURE)	M3	16
28 B	510051	STRUCTURAL CONCRETE, BRIDGE FOOTING	M3	985
29 B	510053	STRUCTURAL CONCRETE, BRIDGE	M3	830

CONTRACT NO. 04-0120R4

CONTRACT CHANGE ORDER NO 75

SHEET 14 OF 136

Item	Item Code	Item	Unit of Measure	Estimated Quantity
30 B	510060	STRUCTURAL CONCRETE, RETAINING WALL	M3	10
31 B	520102	BAR REINFORCING STEEL (BRIDGE)	KG	348000
32 B	520114	BAR REINFORCING STEEL, RETAINING WALL	KG	650
33 B	530100	SHOTCRETE	M3	125
34 B	575004	TIMBER LAGGING	M3	1
35	620909	450 MM ALTERNATIVE PIPE CULVERT	M	57
36	620913	600 MM ALTERNATIVE PIPE CULVERT	M	15
37 B	664000A	CORRUGATED STEEL PIPE ISOLATION SLEEVE	KG	4750
38	703522	150 MM WELDED STEEL PIPE (3.40 MM THICK)	M	18
39	750001	MISCELLANEOUS IRON AND STEEL	KG	800
40 B	750505	BRIDGE DECK DRAINAGE SYSTEM	KG	220

5-1.01 WORKING DRAWINGS

Working drawings shall conform to the requirements in Section 5-1.02, "Plans and Working Drawings," of the Standard Specifications and these special provisions. Working drawings shall include supplements and calculations that are in addition to drawings.

Working drawings shall be submitted to the following location:

California Department of Transportation
Office of the Resident Engineer, Contract 04-0120R4
280 Beale Street
San Francisco, CA 94105

Working drawings shall conform to the following:

A. For initial review, 6 sets of the working drawings, shall be submitted. After the Engineer has determined that a submittal is complete, 12 additional sets shall be submitted.
B. Drawings shall be 559 mm x 864 mm or 279 mm x 432 mm in size. Supplements and calculations shall be 216 mm x 280 mm n size.
C. For drawings, text size shall be nominally 2.8 mm high, minimum. For supplement and calculations, font size shall be 12, minimum.
D. Each working drawing sheet and each page of supplement or calculation, shall include the jobsite name of the structure as shown on the contract plans, District-County-Route-Kilometer Post, bridge number and contract number.
E. Text and details shall be legible and suitable for photocopying and reduction.
F. In addition to the paper copies of the working drawings, electronic files shall be submitted. Electronic files shall be portable document format (PDF) and shall be

submitted on compact disk (CD) media. Each plan sheet shall be a separate PDF file on the CD. The electronic copy of the calculations and supplement shall be made into separate PDF files so that no more than 50 pages are included in a single file on the CD. The CD shall contain an index consisting of the file names and a description of the corresponding file contents. The files shall be listed in the sequence of: 1) index, 2) drawings, 3) supplement, and 4) calculations. If more than one CD is used for a given working drawing submittal, the index shall be included on each CD.

G. Microfilms are required for approved shop drawings and shall be only a 24x reduction. The edge of the corrected original tracing image shall be clearly visible and visually parallel with the edges of the page. A clear, legible symbol shall be provided on the upper left side of each page to show the amount of reduction, and a horizontal and vertical scale shall be provided on each reduced print to facilitate enlargement to original scale.

H. At the completion of the contract, one compiled set of all approved working drawings (in electronic form and including all corrections and revisions) shall be furnished to the Engineer. The index shall be the first file on the CD.

I. At the completion of the contract, one set of reduced prints on 75-g/m2 (minimum) bond paper, 279 mm x 432 mm in size, of the corrected original tracings of all approved working drawings, including all corrections and revisions shall be furnished to the Engineer. Reduced prints that are common to more than one structure shall be submitted for each structure. An index prepared specifically for the drawings for each structure containing sheet numbers and titles shall be included on the first reduced print in the set for each structure. Reduced prints for each structure shall be arranged in the order of drawing numbers shown in the index.

Working drawings shall be stamped and signed by an engineer who is registered as a Civil Engineer in the State of California. When independently checked calculations are required, these calculations shall be stamped and signed by another engineer who is registered as a Civil Engineer in the State of California.

Working drawings shall be submitted sufficiently in advance of the start of the affected work to allow time for review by the Engineer and correction by the Contractor of the drawings without delaying the work. The time shall be proportional to the complexity of the work, but in no case shall the time be less than the review time as specified for the type of working drawings as required elsewhere in these special provisions.

The Engineer will review a working drawing submittal for completeness. Within ten working days of the receipt of the submittal by the Engineer, the Engineer will notify the Contractor in writing if the submittal is determined to be incomplete. If the submittal is determined to be complete, thirty working days from the day of receipt shall be allowed for approval or return for correction of each submittal or resubmittal, unless specified otherwise in the special provisions.

Should the Engineer fail to review the complete working drawing submittal within the time specified, and the Contractor's controlling operation on the critical path is delayed (as determined by the Engineer) by the Engineer's failure to review within the time specified, an extension of time will be granted in conformance with the provisions in Section 8-1.07, "Liquidated Damages," of the Standard Specifications and in "Progress Schedule (Critical Path Method)," of these special provisions. Should the Engineer fail to review the complete working drawing submittal within the time specified, compensation, if any, will be made in accordance with

CONTRACT NO. 04-0120R4

CONTRACT CHANGE ORDER NO 75

SHEET 16 OF 136

Section 8-1.09, "Right of Way Delays," of the Standard Specifications, and "Time Related Overhead," of these special provisions.

5-1.02 INTEGRATED SHOP DRAWINGS

Difficult reinforcement placement is anticipated at the:

A. Reinforcement at column penetrations for drain pipes and electrical conduits
B. Reinforcement at column/footing intersections.

These locations are especially highly congested with reinforcing steel, high strength rods, post-tensioning strand tendons, anchor bolts, and other concrete embedded items as shown on the plans. It is anticipated that various dimensional conflicts may be encountered between the planned locations of these embedded items.

The Contractor shall develop three-dimensional integrated shop drawings (ISD's) for all locations listed above in accordance with the details shown on the plans and the requirements of this section. ISD's shall conform to Section "Working Drawings," of these special provisions. ISD's shall be prepared under the supervision of an engineer who is registered as a Civil Engineer in the State of California. ISD's shall be composite placing drawings to scale and in sufficient detail to show the relative positions of all items that are to be embedded in the concrete and their embedment depth as necessary to demonstrate compatibility of items within the concrete.

Prior to commencing work on the ISD, the Contractor (including any sub-consultants hired to work on the ISD) shall attend a meeting with the Engineer to discuss the ISD work.

Embedded items that are to be shown on the ISD's shall include but are not limited to, the following:

A. Bar reinforcing steel and splices including lap, welded, and mechanical splices
B. Drainage pipe
C. Other items, as shown on the plans or added by the Contractor

The three-dimensional ISD's shall be adequate to ensure that there will be no conflict between the planned positions of any embedded items and that concrete cover will be adequate.

If conflicts are discovered during the preparation of ISD's, the Contractor shall revise the working drawings for one or more of the embedded items to eliminate the conflict or provide proper cover or spacing. If a conflict requires that bar reinforcement locations be adjusted, the Contractor shall proceed with performing reinforcing steel adjustments in the ISD's prior to submitting the changes to the Engineer.

The ISD's to be submitted to the Engineer shall include the following:

A. ISD submittal shall be in two-dimensional format utilizing the three-dimensional layouts as input.
B. Three sets of the ISD's corresponding to the details as shown on the plans with incorporation of any Contractor's adjustments in the locations of embedded items. These ISD's shall resolve all conflicts and satisfy concrete cover requirements as shown on the plans. The initial ISD submittal for a particular area shall clearly identify all adjustments

CONTRACT NO. 04-0120R4
CONTRACT CHANGE ORDER NO 75
SHEET 17 OF 136

to the locations of embedded items made as part of the Contractor's conflict resolution process.

C. Three copies of the ISD's in electronic form on compact discs or tape for use by the Engineer.

CAD files of the contract drawings will not be made available to the Contractor.

After completed ISD's are received by the Engineer, the Contractor shall allow the Engineer 8 weeks for review and approval. For each revised ISD's submitted by the Contractor, the Contractor shall allow the Engineer an additional 2 weeks for review and approval. Construction of the items listed above-shall not begin until the Engineer reviews and approves the complete ISD's with all conflicts resolved.

No extension of time will be permitted for the Contractor's failure to identify all conflicts or to complete the ISD's as required by these special provisions.

Full compensation for preparing ISD's, including all revisions necessary due to conflict resolution measures taken by the Contractor, shall be considered as included in the contract prices paid for the various items of work involved and no additional compensation will be allowed therefor.

5-1.03 PAYMENTS

Attention is directed to Sections 9-1.06, "Partial Payments," and 9-1.07, "Payment After Acceptance," of the Standard Specifications and these special provisions.

In determining the partial payments to be made to the Contractor, only the following listed materials will be considered for inclusion in the payment as materials furnished but not incorporated in the work:

A. Steel Piling
B. Bar reinforcing steel
C. Bridge deck drainage system

5-1.04 PROJECT INFORMATION

The information in this section has been compiled specifically for this project and is made available for bidders and Contractors. Other information referenced in the Standard Specifications and these special provisions do not appear in this section. The information is subject to the conditions and limitations set forth in Section 2-1.03, "Examination of Plans, Specifications, Contract, and Site of Work," and Section 6-2, "Local Materials," of the Standard Specifications. Bidders and Contractors shall be responsible for knowing the procedures for obtaining information.

Information attached to the project plans is as follows:

A. Log of Test Borings

Bidders and Contractors may contact the Transportation Laboratory to request viewing rock cores via electronic mail at the following address:

Coreroom@dot.ca.gov

CONTRACT NO. 04-0120R4

CONTRACT CHANGE ORDER NO 75

SHEET 18 OF 136

Request shall be submitted at least 5 working days before the intended date for viewing, and shall include the District-County-Route, bridge number, contract number, viewing date, and contact information including telephone number.

Plans of the existing bridges may be requested by fax from the Office of Structure Maintenance and Investigations, 1801 30th Street, Sacramento, CA, Fax (916) 227-8357.

Plans of the existing bridges may be requested by fax from the Office of Structure Maintenance and Investigations, 1801 30th Street, Sacramento, CA, Fax (916) 227-8357, and are available at the Office of Structure Maintenance and Investigations, Los Angeles, CA, Telephone (213) 897-0877.

5-1.05 AREAS FOR CONTRACTOR'S USE

Attention is directed to the requirements specified in Section 7-1.19, "Rights in Land and Improvements," of the Standard Specifications, plans and these special provisions.

The highway right of way shall be used only for purposes that are necessary to perform the required work. The Contractor shall not occupy the right of way, or allow others to occupy the right of way, for purposes which are not necessary to perform the required work.

The Contractor's attention is directed to "Cooperation," of these special provisions, and the Contractor shall use only the designated areas for Contractor's use as specified in this section, and as shown on the plans and as follows:

1. **Area PR:** it is available for the contractor's use for the entire contract period except as limited by other areas as defined on the contract plans and these special provisions. The Contractor shall permit access by other contractors as directed by the Engineer.
2. **Area FPR:** it. is primarily available to Contract 04-0120R4 until May 1, 2007. Prior to May 1, 2007, the Contractor shall coordinate any planned work in area FPR with the Engineer and Contract 04-0120R4 contractor. After May 1, 2007, area FPR shall be considered a part of area FP.
3. **Area FP:** it is available for use by the 04-0120F4 contract until November 30, 2007. The area FP shall then be made available to the contractor constructing the YBI transition structures under contract 04-0120S4 until May 1, 2009.
4. **Area EF:** is primarily available to Contract 04-0120E4 until March 31, 2008, and then to this contract after that date. Prior to March 31, 2008, the Contractor shall coordinate any planned work in area EF with the Engineer and Contract 04-0120E4 contractor. Additionally, footings at tower T1 and footing and piers at Pier E2 to be constructed by others under Contract 04-0120E4 will be substantially complete by March 31, 2008, to allow the Contractor to complete the tower and E2 work specified under the contract.
5. **Area CE:** is designated for use by Contract 04-0120E4 until March 31, 2008. The Contractor shall have access through area CE to the work area at Pier W2. After March 31, 2008, the area CE becomes a part of the area provided to the Yerba Buena Island Structures contractor on contract 04-0120S4. The Contractor shall continue to have access through the area to the work area at Pier W2.

The Contractor shall maintain access to the Torpedo Factory area at the east end of Yerba Buena Island at all times during the contract. Access may be via the existing Torpedo Factory Road or other routing as approved by the Engineer.

CONTRACT NO. 04-0120R4

CONTRACT CHANGE ORDER NO 75

SHEET 19 OF 136

No area is available within the contract limits for the exclusive use of the Contractor. However, temporary storage of equipment and materials on State property may be arranged with the Engineer, subject to the prior demands of State maintenance forces and to other contract requirements. Use of the Contractor's work areas and other State-owned property shall be at the Contractor's own risk. The State shall not be held liable for damage to or loss of materials or equipment located within these areas.

Toll plaza parking lots shall not be used for the Contractor's employees private vehicles and the Contractor's equipment and vehicles.

The Contractor shall remove the equipment, materials, and rubbish from the work areas and other State-owned property which the Contractor occupies and shall leave the areas in a presentable condition, in conformance with the provisions in Section 4-1.02, "Final Cleaning Up," of the Standard Specifications.

The Contractor shall secure, at the Contractor's own expense, areas required for storage of plant, equipment, and materials, or for other purposes if sufficient area is not available to the Contractor within the contract limits.

5-1.06 UTILITIES

The Contractor shall make arrangements to obtain electrical power, water or compressed air or other utilities required for the Contractor's operations and shall make and maintain the necessary service connections at the Contractor's own expense.

5-1.07 SANITARY PROVISIONS

State sanitary facilities will not be available for use by the Contractor's employees.

5-1.08 BRIDGE TOLLS

Toll-free passage on the San Francisco-Oakland Bay Bridge will be granted only for cars, trucks and special construction equipment which are clearly marked on the exterior with the Contractor's identification and which are being operated by the Contractor exclusively for the project, and which are used for the purpose of transporting materials and workers directly to and from the project site.

The Contractor shall make application to the Engineer in advance for toll-free passage. The Contractor will be held accountable for the proper use of passes issued, and upon completion of the work, shall return unused passes to the Engineer.

Attention is directed to Section 23302, "Evasion of Toll," of the Vehicle Code.

5-1.09 PERMITS AND LICENSES

Attention is directed to Section 7-1.04, "Permits and Licenses," of the Standard Specifications and these special provisions.

The Department has obtained the permits and licenses from the following agencies for this project:

A. California Regional Water Quality Control Board (RWQCB)
B. U.S. Army Corps of Engineers (ACOE)
C. San Francisco Bay Conservation Development Commission (BCDC)
D. United States Coast Guard (USCG)
E. California Department of Fish and Game (CDFG)

CONTRACT NO. 04-0120R4

CONTRACT CHANGE ORDER NO 75

SHEET 20 OF 136

These permits has been made available to the Contractor as part of the information handout for the 04-0120R4 Contract.

Forupdated versions of environmental permits, the Contractor shall visit the website:

www.biomitigation.org

Full compensation for conforming to the requirements in these permits and licenses shall be considered as included in the prices paid for the various contract items of work and no additional compensation will be allowed therefor.

5-1.10 HAZARDOUS MATERIAL, GENERAL

Attention is directed to "Earthwork" of these special provisions regarding the removal and disposal of hazardous material described in this section.

Contaminants have been discovered through testing within the project limits. Testing consisted of collecting and analyzing in situ samples from within the project limits. Summary tables of the test results are included in the "Materials Information." The complete report entitled "Site Investigation Report, SFOBB East Span Seismic Safety Project, Yerba Buena Island" is available for inspection at the office of the Duty Senior, 111 Grand Avenue, Oakland, CA 94612, email: , telephone (510) 286-5209, and fax number: (510) 622-1805. These test results have been used for disposal characterization of material within the excavation limits and shall not be construed as identifying all locations within the project limits that contain contaminants.

Wherever the following terms are used in the contract documents, the meaning and intent shall be interpreted as provided below:

A. Hazardous material – Material that contains contaminants at concentrations equal to or greater than the threshold limit concentrations listed in Section 66261.24 of Title 22 of the California Code of Regulations.

Characterization and disposal of additional material resulting from excavations performed outside of the pay limits shown on the plans, specified in the Standard Specifications, or specified or directed by the Engineer, for the Contractor's convenience, shall be at the Contractor's expense. This resultant material shall be presumed to be either non-hazardous material or hazardous material if the test results for the location indicate that the material being excavated is non-hazardous material or hazardous material. The Contractor shall dispose of the resultant material in conformance with the provisions in "Earthwork" of these special provisions. When the material must be removed from highway right of way, the Contractor shall furnish replacement material suitable for the purpose intended in conformance with the provisions in Section 19, "Earthwork," of the Standard Specifications.

APPLICABLE RULES AND REGULATIONS

Excavation, transport and disposal of hazardous material shall be in conformance with the rules and regulations of the following agencies:

United States Department of Transportation (USDOT)

United States Environmental Protection Agency (USEPA)
California Environmental Protection Agency (CAL-EPA)
1. Department of Toxic Substance Control (DTSC)
2. Integrated Waste Management Board
3. Regional Water Quality Control Board, Region 2 (RWQCB)
4. State Air Resources Board
Bay Area Air Quality Management District (BAAQMD)
California Division of Occupational Safety and Health Administration (CAL-OSHA)

PERMITS AND LICENSES

The Contractor shall procure all permits and licenses, pay all charges and fees, and give all notices necessary and incident to the due and lawful prosecution of the work, including registration for transporting vehicles carrying hazardous material, in conformance with the provisions in Section 7-1.04, "Permits and Licenses," of the Standard Specifications.

The Engineer will obtain the Environmental Protection Agency Generator Identification Number and Board of Equalization Identification Number and sign all manifests as the Generator.

SITE HEALTH AND SAFETY PLAN

The Contractor shall prepare a detailed Site Health and Safety Plan for all site personnel, including State personnel, that identifies potential health and safety hazards associated with each operation and specifies work practices that will be used to protect workers from those hazards in conformance with the DTSC and CAL-OSHA regulations. At a minimum, the Site Health and Safety Plan shall identify key site safety personnel, describe risks associated with the work, describe training requirements, describe appropriate personal protective equipment, describe any site-specific medical surveillance requirements, describe any periodic air monitoring requirements, define appropriate site work zones, and describe any decontamination requirements. The Site Health and Safety Plan shall be submitted at least 15 working days prior to beginning any excavation work for review and acceptance by the Engineer. Prior to submittal, the Contractor shall have the Site Health and Safety Plan approved by an Industrial Hygienist certified by the American Board of Industrial Hygiene. Subcontractors shall use the Site Health and Safety Plan prepared by the Contractor or prepare and submit a separate Site Health and Safety Plan in conformance with the provisions in this section.

SAFETY TRAINING

Prior to performing any work, all personnel, including State personnel, shall complete a safety training program that communicates the potential health and safety hazards associated with work on the site and instructs the personnel in procedures for doing the work safely. The level of training provided shall be consistent with the personnel's job function and conform to CAL-OSHA regulations. The training, including subsequent training required until completion of the project, shall be provided by the Contractor. The Contractor shall provide a certification of completion of the Safety Training Program to all personnel. Personal protective equipment required by State personnel to inspect the work shall be provided by the Contractor. The number of State personnel requiring the above mentioned safety training program and personal protective equipment will be 25.

CONTRACT NO. 04-0120R4

CONTRACT CHANGE ORDER NO 75

SHEET 22 OF 136

PAYMENT

Full compensation for conforming to the requirements of this section shall be considered as included in the prices paid for the various contract items of work affected by this section and no additional compensation will be allowed therefor.

5-1.11 ENVIRONMENTALLY SENSITIVE AREAS (GENERAL)

A. ENVIRONMENTALLY SENSITIVE AREAS

Environmentally sensitive areas (ESA) shall consist of areas within and near the limits of construction where access is prohibited or limited for the preservation of archeological site, historic architectural resource or existing vegetation, or protection of biological habitat as shown on the plans. The Engineer will determine the exact location of the boundaries of the ESAs. No work shall be conducted within the ESAs, except ESAs 1a and 1b:

1. ESA 1a and 1b, Environmentally Sensitive Areas
   ESA 1a consists of asphalt concrete paved area and unpaved slope area.
   ESA 1b is located within the asphalt concrete paved area.
   The boundaries of the paved areas of the ESAs 1a and 1b have been installed with a 200-mm white thermoplastic delineation.
   Within the paved areas and delineated boundaries of the ESAs 1a and 1b, no work involving asphalt removal or earth disturbance and/or removal, including but not limited to driving posts for fencing, signing, or utility trenching, shall be allowed.. Limited access to these ESAs may be allowed for vehicle and equipment access, storage or transport of materials or equipment vehicle or equipment access, storage and stockpiling, or transport of materials, when approved in writing by the Engineer.
   Within the unpaved slope area of ESA 1a, no work involving earth disturbance, including but not limited to driving posts for fencing, or signing, shall be allowed. The Contractor shall submit to the Engineer the protection plans including the scope of the work, in conformance with the requirements in "Working Drawings," of these special provisions. The Contractor equipment access will not be allowed, unless the Contractor has obtained a written approval from the Engineer.
2. ESA 2a, 2b and 2c
   ESA 2a consists of Building No. 262 (Torpedo Factory), Historic Architectural Resource
   ESA 2b consists of the Senior Officers' Quarters Historic District (Quarters 1 through 7), Historic Architectural Resource, and grounds.
   ESA 2c consists of Quarters 8, and grounds
3. ESA 3, Quarters 10, Building 267 (garage), and grounds.
4. ESA 5, Vegetation, Environmentally Sensitive Areas, including mature vegetation screen located on slope southwest of Quarters 1 (Nimitz House), and pittosporum trees
5. ESA 6, Tidal wetlands, water-based ESA (by others), located on the north side of YBI
6. ESA 7, Eelgrass beds, water-based ESA (by others), located on the south sides of YBI
7. ESA 8, Eelgrass beds, water-based ESA (by others), located on the north sides of YBI
8. ESA 9a and 9b, concrete retaining walls and weir,Historic Architectural Resource

CONTRACT NO. 04-0120R4

CONTRACT CHANGE ORDER NO 75

SHEET 23 OF 136

Attention is directed to Section 7—1.01 "Laws to be Observed," and Section 7—1.04 "Permits and Licenses," of the Standard Specifications regarding State and Federal regulations, permits, or agreements which pertain to an ESA.

Water-based ESA boundaries have been marked with USCG-approved buoys, and have been established and will be maintained by others.

Land-based ESA boundaries shall be clearly marked by either the installation of Temporary Fence (Type ESA) or thermoplastic pavement delineation as specified elsewhere in these special provisions. The boundaries shall be checked periodically and the markings repaired or replaced as necessary during construction.

Within the boundaries of land-based ESAs 1a (unpaved area), ESAs 2b and 2c, ESA 3, ESA 5, and ESA 9a and 9b and water-based ESAs 6, 7, and 8, no project related activities shall take place, without the written approval from the Engineer. This specifically prohibits vehicle and barge access, storage or transport of any materials, including hydrocarbon and lead contaminated material, or any other project related activities. The Contractor shall take such measures, including the posting of written notices to his employees and subcontractors, to ensure that ESAs are not entered or disturbed.

The Contractor shall mitigate damage or impacts to the ESAs caused by the Contractor's operations, at the Contractor's expense in accordance with Section 7-1.11 of the Standard Specifications. Any additional mitigation assessed to the Department will be the responsibility of the Contractor. If necessary, deductions from moneys due or to become due the Contractor will be made for the mitigation costs.

RESOURCE REGULATIONS AND MANDATES

In compliance with Section 106 of the National Historic Preservation Act of 1966, any archaeological resource discovered during construction activities must be evaluated by the Department of Transportation Archaeologist.

The California Public Resources Code (PRC) Sections 5097.00 and 5097.98 require protection of Native American remains which might be discovered and outlines procedures for handling any burials found. The California PRC Section 5097.9 and Health and Safety Code Section 7050 require coordination with the Native American Heritage Commission.

Under California PRC, Chapter 1.7, Section 5097.5, it is a misdemeanor charge for anyone to knowingly disturb a historical feature or steal an archaeological resource. The California Administrative Code, Title 14, Section 4307, mandates that no person shall disfigure any object of historical interest or value. Under California Penal Code, Title 14, Part 1, Section 622-1.2, it is a misdemeanor to destroy anything of historical value within any public place.

All archaeological resources located on Department of Transportation property are property of the State of California. All archaeological resources located on Federal property are property of the Federal government and are governed by federal environmental laws, such as, but not limited to, the Antiquities Act of 1906, the Archaeological Resources Protection Act, and the Native American Graves Protection and Repatriation Act.

PROTECTION OF ESA 2a, BUILDING No. 262

Attention is directed to Section 7-1.12, "Preservation of Property," and Section 7-1.12, "Responsibility for Damage," of the Standard Specifications, and the provisions in "Photo Survey of Existing Facilities," and "Vibration Monitoring," of these special provisions, regarding Building No. 262, a historical building that is included in ESA 2.

CONTRACT NO. 04-0120R4

CONTRACT CHANGE ORDER NO 75

SHEET 24 OF 136

Attention is directed to "Project Information," of the special provisions, regarding the as-built plans of Building No. 262.

The Contractor shall take measures to protect the building from damage caused by the Contractor's operations. The Contractor shall submit a building protection plan for the Engineer's review at least 30 days prior to the start of adjacent or overhead construction. The Contractor shall also notify the Engineer at least 48 hours prior to the start of adjacent or overhead construction.

The Contractor shall bear full liability for any damage to Building No. 262 caused by the Contractor's operations.

Should any damage to Building No. 262 occur, the Contractor shall notify the Engineer within 24 hours. The Engineer may order the suspension of construction operations until the Contractor takes all necessary measures to prevent further damage to the building, and until an approved repair is completed. The Contractor shall submit a repair plan to the Engineer for approval prior to the start of such work. The Engineer will review the plan within 90 days. All repairs must follow the Secretary of the Interior's Standards for the Treatment of Historic Properties (http://www2.cr.nps.gov/tps/standguide/index.htm), and must be undertaken by a licensed preservation architect who meets the Secretary of the Interior's Professional Qualifications Standards for Historic Architecture (http://www.cr.nps.gov/local-law/arch_stnds_9.htm). The Department may retain not less than $2,100,000 from moneys due or that may become due the Contractor under the contract, until an approved repair or reconstruction is complete.

B. AREA TO BE MONITOR (ATM)

The Department Archeologist will monitor the delineated ATM area.

No construction activities involving asphalt removal or earth disturbance and/or removal shall be allowed within the ATM area shown on the plans, unless the Contractor has obtained a writing approval from the Engineer.

The Contractor shall obtained the Engineer's approval in writing at least 20 days in advance of the beginning of the removal of the top 0.6-m in depth of roadway excavation within the ATM, in order to have the Department Archaeologist begin to mobilize

CONSTRUCTION

The Department Archaeologist shall have the authority to halt construction operations in the vicinity of an archaeological find, if significant or potentially significant cultural resources are exposed or if the find will be adversely affected by construction operations.

In the event that human skeletal material or archaeological resources should be uncovered within the ATM area and/or contract limits, the Contractor shall immediately notify the Engineer, who in turn will notify the Department Archaeologist and the State may conduct an archaeological investigation. The Contractor's construction activities within 15-m of the find shall be halted immediately and shall not be resumed until so permitted, in writing by the Engineer.

When determined by the Department Archeologist that an archeological investigation is required, and as requested by the Engineer, the Contractor shall provide construction equipment and operators and/or laborers and shall cooperate with and assist Department Archaeologist(s) in their conducting of any of the archaeological work, if necessary.

CONTRACT NO. 04-0120R4

CONTRACT CHANGE ORDER NO 75

SHEET 25 OF 136

The Contractor shall provide, within 24 hours at the request of the Engineer:

1. A grading bucket with flat blade.
2. Suitable access/egress ramp or ladders or stairs in the ATM area as directed by the Engineer.

The above equipment and material items required for the archaeological work as specified in this sectionwill be paid for as extra work as provided in Section 4-1.03D of the Standard Specifications.

If, in the opinion of the Engineer, the Contractor's operations are delayed or interfered with by reason of such discoveries, the State will compensate the Contractor for the delays to the extent provided in Section 8-1.09, "Right of Way Delays," of the Standard Specifications, and not otherwise, except as provided in Section 8-1.10, "Utility and Non-Highway Facilities," of the Standard Specifications.

C. SPECIAL CONSTRUCTION AREA (SCA)

The special construction area is designated as the landscaping restoration area to be constructed by others.

The Contractor will be allowed inside SCA area. The Contractor shall not encroach into the designated ESA area bounded by ESA 2b, the Senior Officers' Quarters Historic District (Quarters 1 through 7), as shown on the plans. Damages to the existing pavement, sidewalk and cub caused by the Contractor's operations, shall be replaced in kind at the Contractor's expenses.

PAYMENT

Full compensation for checking, repairing or replacing the land-based ESA marking shall be considered as included in the contract price paid for various items of work involved and no separate payment will be made therefor.

Full compensation for protecting and submitting the protection plan for the unpaved slope area of the ESA 1a shall be considered as included in the contract price paid for various items of work involved and no separate payment will be made therefor.

5-1.12 SOUND CONTROL REQUIREMENTS

Sound control shall conform to the provisions in Section 7-1.01I, "Sound Control Requirements," of the Standard Specifications and these special provisions.

The noise level from the Contractor's operations, between the hours of 7:00 p.m. and 7:00 a.m., shall not exceed 78 dbA at a distance of 15 m from the source. Impact-type mechanical operations, such as pile-driving and jack-hammering shall not be conducted between the hours of 7:00 p.m. and 7:00 a.m. At all times, the Contractor shall be responsible for complying with local ordinances regulating noise levels as well as the sound requirements of this section.

The noise level requirement shall apply to the equipment on the job or related to the job, including but not limited to trucks, transit mixers or transient equipment that may or may not be owned by the Contractor. The use of loud sound signals shall be avoided in favor of light warnings except those required by safety laws for the protection of personnel.

Full compensation for conforming to the requirements of this section shall be considered as included in the prices paid for the various contract items of work involved and no additional compensation will be allowed therefor.

CONTRACT NO. 04-0120R4

CONTRACT CHANGE ORDER NO 75

SHEET 26 OF 136

Noise monitoring activities will be conducted by the Department of Transportation. The Contractor shall coordinate with the Department of Transportation monitors and allow them access to noise monitoring locations.

SECTION 6. (BLANK)

SECTION 7. (BLANK)

SECTION 8. MATERIALS

SECTION 8-1. MISCELLANEOUS

8-1.01 SUBSTITUTION OF NON-METRIC MATERIALS AND PRODUCTS

Only materials and products conforming to the requirements of the specifications shall be incorporated in the work. When metric materials and products are not available, and when approved by the Engineer, and at no cost to the State, materials and products in the United States Standard Measures which are of equal quality and of the required properties and characteristics for the purpose intended, may be substituted for the equivalent metric materials and products, subject to the following provisions:

A. Materials and products shown on the plans or in the special provisions as being equivalent may be substituted for the metric materials and products specified or detailed on the plans.
B. Before other non-metric materials and products will be considered for use, the Contractor shall furnish, at the Contractor's expense, evidence satisfactory to the Engineer that the materials and products proposed for use are equal to or better than the materials and products specified or detailed on the plans. The burden of proof as to the quality and suitability of substitutions shall be upon the Contractor and the Contractor shall furnish necessary information as required by the Engineer. The Engineer will be the sole judge as to the quality and suitability of the substituted materials and products and the Engineer's decision will be final.
C. When the Contractor elects to substitute non-metric materials and products, including materials and products shown on the plans or in the special provisions as being equivalent, the list of sources of material specified in Section 6-1.01, "Source of Supply and Quality of Materials," of the Standard Specification shall include a list of substitutions to be made and contract items involved. In addition, for a change in design or details, the Contractor shall submit plans and working drawings in conformance with the provisions in Section "Working Drawings," of these special provisions. The plans and working drawings shall be submitted at least 7 days before the Contractor intends to begin the work involved.

Unless otherwise specified, the following substitutions of materials and products will be allowed:

CONTRACT NO. 04-0120R4

CONTRACT CHANGE ORDER NO 75

SHEET 27 OF 136

SUBSTITUTION TABLE FOR PLAIN WIRE REINFORCEMENT
ASTM Designation: A 82

METRIC SIZE SHOWN ON THE PLANS mm^2	SIZE TO BE SUBSTITUTED $inch^2 \times 100$
MW9	W1.4
MW10	W1.6
MW13	W2.0
MW15	W2.3
MW19	W2.9
MW20	W3.1
MW22	W3.5
MW25	W3.9, except W3.5 in piles only
MW26	W4.0
MW30	W4.7
MW32	W5.0
MW35	W5.4
MW40	W6.2
MW45	W6.5
MW50	W7.8
MW55	W8.5, except W8.0 in piles only
MW60	W9.3
MW70	W10.9, except W11.0 in piles only
MW80	W12.4
MW90	W14.0
MW100	W15.5

SUBSTITUTION TABLE FOR BAR REINFORCEMENT

METRIC BAR DESIGNATION NUMBER[1] SHOWN ON THE PLANS	BAR DESIGNATION NUMBER[2] TO BE SUBSTITUTED
10	3
13	4
16	5
19	6
22	7
25	8
29	9
32	10
36	11
43	14
57	18

[1]Bar designation numbers approximate the number of millimeters of the nominal diameter of the bars.

[2]Bar numbers are based on the number of eighths of an inch included in the nominal diameter of the bars.

No adjustment will be required in spacing or total number of reinforcing bars due to a difference in minimum yield strength between metric and non-metric bars.

CONTRACT NO. 04-0120R4

CONTRACT CHANGE ORDER NO 75

SHEET 28 OF 136

SUBSTITUTION TABLE FOR SIZES OF:
(1) STEEL FASTENERS FOR GENERAL APPLICATIONS (ASTM Designation: A 307 or AASHTO Designation: M 314, Grade 36 or 55), and
(2) HIGH STRENGTH STEEL FASTENERS (ASTM Designation: A 325 or A 449)

METRIC SIZE SHOWN ON THE PLANS mm	SIZE TO BE SUBSTITUTED inch
6 or 6.35	1/4
8 or 7.94	5/16
10 or 9.52	3/8
11 or 11.11	7/16
13, 12.70, or M12	1/2
14 or 14.29	9/16
16, 15.88, or M16	5/8
19, 19.05, or M20	3/4
22, 22.22, or M22	7/8
24, 25, 25.40, or M24	1
29, 28.58, or M27	1-1/8
32, 31.75, or M30	1-1/4
35 or 34.93	1-3/8
38, 38.10, or M36	1-1/2
44 or 44.45	1-3/4
51 or 50.80	2
57 or 57.15	2-1/4
64 or 63.50	2-1/2
70 or 69.85	2-3/4
76 or 76.20	3
83 or 82.55	3-1/4
89 or 88.90	3-1/2
95 or 95.25	3-3/4
102 or 101.60	4

CONTRACT NO. 04-0120R4

CONTRACT CHANGE ORDER NO 75

SHEET 29 OF 136

SUBSTITUTION TABLE FOR NOMINAL THICKNESS OF SHEET METAL

UNCOATED HOT AND COLD ROLLED SHEETS		HOT-DIPPED ZINC COATED SHEETS (GALVANIZED)	
METRIC THICKNESS SHOWN ON THE PLANS mm	GAGE TO BE SUBSTITUTED inch	METRIC THICKNESS SHOWN ON THE PLANS mm	GAGE TO BE SUBSTITUTED inch
7.94	0.3125	4.270	0.1681
6.07	0.2391	3.891	0.1532
5.69	0.2242	3.510	0.1382
5.31	0.2092	3.132	0.1233
4.94	0.1943	2.753	0.1084
4.55	0.1793	2.372	0.0934
4.18	0.1644	1.994	0.0785
3.80	0.1495	1.803	0.0710
3.42	0.1345	1.613	0.0635
3.04	0.1196	1.461	0.0575
2.66	0.1046	1.311	0.0516
2.28	0.0897	1.158	0.0456
1.90	0.0747	1.006 or 1.016	0.0396
1.71	0.0673	0.930	0.0366
1.52	0.0598	0.853	0.0336
1.37	0.0538	0.777	0.0306
1.21	0.0478	0.701	0.0276
1.06	0.0418	0.627	0.0247
0.91	0.0359	0.551	0.0217
0.84	0.0329	0.513	0.0202
0.76	0.0299	0.475	0.0187
0.68	0.0269	--------	--------
0.61	0.0239	--------	--------
0.53	0.0209	--------	--------
0.45	0.0179	--------	--------
0.42	0.0164	--------	--------
0.38	0.0149	--------	--------

CONTRACT NO. 04-0120R4

CONTRACT CHANGE ORDER NO 75

SHEET 30 OF 136

SUBSTITUTION TABLE FOR WIRE

METRIC THICKNESS SHOWN ON THE PLANS mm	WIRE THICKNESS TO BE SUBSTITUTED inch	GAGE NO.
6.20	0.244	3
5.72	0.225	4
5.26	0.207	5
4.88	0.192	6
4.50	0.177	7
4.11	0.162	8
3.76	0.148	9
3.43	0.135	10
3.05	0.120	11
2.69	0.106	12
2.34	0.092	13
2.03	0.080	14
1.83	0.072	15
1.57	0.062	16
1.37	0.054	17
1.22	0.048	18
1.04	0.041	19
0.89	0.035	20

SUBSTITUTION TABLE FOR PIPE PILES

METRIC SIZE SHOWN ON THE PLANS mm x mm	SIZE TO BE SUBSTITUTED inch x inch
PP 360 x 4.55	NPS 14 x 0.179
PP 360 x 6.35	NPS 14 x 0.250
PP 360 x 9.53	NPS 14 x 0.375
PP 360 x 11.12	NPS 14 x 0.438
PP 406 x 12.70	NPS 16 x 0.500
PP 460 x T	NPS 18 x T"
PP 508 x T	NPS 20 x T"
PP 559 x T	NPS 22 x T"
PP 610 x T	NPS 24 x T"
PP 660 x T	NPS 26 x T"
PP 711 x T	NPS 28 x T"
PP 762 x T	NPS 30 x T"
PP 813 x T	NPS 32 x T"
PP 864 x T	NPS 34 x T"
PP 914 x T	NPS 36 x T"
PP 965 x T	NPS 38 x T"
PP 1016 x T	NPS 40 x T"
PP 1067 x T	NPS 42 x T"
PP 1118 x T	NPS 44 x T"
PP 1219 x T	NPS 48 x T"
PP 1524 x T	NPS 60 x T"

The thickness in millimeters (T) represents an exact conversion of the thickness in inches (T").

CONTRACT NO. 04-0120R4

CONTRACT CHANGE ORDER NO 75

SHEET 31 OF 36

SUBSTITUTION TABLE FOR CIDH CONCRETE PILING

METRIC SIZE SHOWN ON THE PLANS	ACTUAL AUGER SIZE TO BE SUBSTITUTED inches
350 mm	14
400 mm	16
450 mm	18
600 mm	24
750 mm	30
900 mm	36
1.0 m	42
1.2 m	48
1.5 m	60
1.8 m	72
2.1 m	84
2.4 m	96
2.7 m	108
3.0 m	120
3.3 m	132
3.6 m	144
4.0 m	156

SUBSTITUTION TABLE FOR STRUCTURAL TIMBER AND LUMBER

METRIC MINIMUM DRESSED DRY, SHOWN ON THE PLANS mm x mm	METRIC MINIMUM DRESSED GREEN, SHOWN ON THE PLANS mm x mm	NOMINAL SIZE TO BE SUBSTITUTED inch x inch
19x89	20x90	1x4
38x89	40x90	2x4
64x89	65x90	3x4
89x89	90x90	4x4
140x140	143x143	6x6
140x184	143x190	6x8
184x184	190x190	8x8
235x235	241x241	10x10
286x286	292x292	12x12

CONTRACT NO. 04-0120R4

CONTRACT CHANGE ORDER NO 75

SHEET 32 OF 136

SUBSTITUTION TABLE FOR NAILS AND SPIKES

METRIC COMMON NAIL, SHOWN ON THE PLANS Length, mm Diameter, mm	METRIC BOX NAIL, SHOWN ON THE PLANS Length, mm Diameter, mm	METRIC SPIKE, SHOWN ON THE PLANS Length, mm Diameter, mm	SIZE TO BE SUBSTITUTED Penny-weight
50.80 2.87	50.80 2.51	———	6d
63.50 3.33	63.50 2.87	———	8d
76.20 3.76	76.20 3.25	76.20 4.88	10d
82.55 3.76	82.55 3.25	82.55 4.88	12d
88.90 4.11	88.90 3.43	88.90 5.26	16d
101.60 4.88	101.60 3.76	101.60 5.72	20d
114.30 5.26	114.30 3.76	114.30 6.20	30d
127.00 5.72	127.00 4.11	127.00 6.68	40d
———	———	139.70 7.19	50d
———	———	152.40 7.19	60d

CONTRACT NO. 04-0120R4

CONTRACT CHANGE ORDER NO 75

SHEET 33 OF 136

SUBSTITUTION TABLE FOR IRRIGATION COMPONENTS

METRIC WATER METERS, TRUCK LOADING STANDPIPES, VALVES, BACKFLOW PREVENTERS, FLOW SENSORS, WYE STRAINERS, FILTER ASSEMBLY UNITS, PIPE SUPPLY LINES, AND PIPE IRRIGATION SUPPLY LINES SHOWN ON THE PLANS DIAMETER NOMINAL (DN) mm	NOMINAL SIZE TO BE SUBSTITUTED inch
15	1/2
20	3/4
25	1
32	1-1/4
40	1-1/2
50	2
65	2-1/2
75	3
100	4
150	6
200	8
250	10
300	12
350	14
400	16

Unless otherwise specified, substitutions of United States Standard Measures standard structural shapes corresponding to the metric designations shown on the plans and in conformance with the requirements in ASTM Designation: A 6/A 6M, Annex 2, will be allowed.

8-1.02 ENGINEERING FABRICS

Engineering fabrics shall conform to the provisions in Section 88, "Engineering Fabrics," of the Standard Specifications and these special provisions.

Filter fabric for this project shall be ultraviolet (UV) ray protected.

SECTION 8-2. CONCRETE

8-2.01 PORTLAND CEMENT CONCRETE

Portland cement concrete shall conform to the provisions in Section 90, "Portland Cement Concrete," of the Standard Specifications and these special provisions.

Cementitious material to be used in portland cement concrete shall conform to the provisions for cement and mineral admixtures in Section 90-2, "Materials," of the Standard Specifications, and shall be a combination of "Type II Modified" Portland cement and mineral admixture.

CONTRACT NO. 04-0120R4

CONTRACT CHANGE ORDER NO 75

SHEET 34 OF 136

References to Section 90-2.01, "Portland Cement," of the Standard Specifications shall mean Section 90-2.01, "Cement," of the Standard Specifications.

Mineral admixture shall be combined with cement in conformance with the provisions in Section 90-4.08, "Required Use of Mineral Admixtures," of the Standard Specifications for the concrete materials specified in Section 56-2, "Roadside Signs," of the Standard Specifications.

The requirements of Section 90-4.08, "Required Use of Mineral Admixture," of the Standard Specifications shall not apply to Section 19-3.025C, "Soil Cement Bedding," of the Standard Specifications.

The Department maintains a list of sources of fine and coarse aggregate that have been approved for use with a reduced amount of mineral admixture in the total amount of cementitious material to be used. A source of aggregate will be considered for addition to the approved list if the producer of the aggregate submits to the Transportation Laboratory certified test results from a qualified testing laboratory that verify the aggregate complies with the requirements. Prior to starting the testing, the aggregate test shall be registered with the Department. A registration number can be obtained by calling (916) 227-7228. The registration number shall be used as the identification for the aggregate sample in correspondence with the Department. Upon request, a split of the tested sample shall be provided to the Department. Approval of aggregate will depend upon compliance with the specifications, based on the certified test results submitted, together with any replicate testing the Department may elect to perform. Approval will expire 3 years from the date the most recent registered and evaluated sample was collected from the aggregate source.

Qualified testing laboratories shall conform to the following requirements:

A. Laboratories performing ASTM Designation: C 1293 shall participate in the Cement and Concrete Reference Laboratory (CCRL) Concrete Proficiency Sample Program and shall have received a score of 3 or better on all tests of the previous 2 sets of concrete samples.
B. Laboratories performing ASTM Designation: C 1260 shall participate in the Cement and Concrete Reference Laboratory (CCRL) Pozzolan Proficiency Sample Program and shall have received a score of 3 or better on the shrinkage and soundness tests of the previous 2 sets of pozzolan samples.

Aggregates on the list shall conform to one of the following requirements:

A. When the aggregate is tested in conformance with the requirements in California Test 554 and ASTM Designation: C 1293, the average expansion at one year shall be less than or equal to 0.040 percent; or
B. When the aggregate is tested in conformance with the requirements in California Test 554 and ASTM Designation: C 1260, the average of the expansion at 16 days shall be less than or equal to 0.15 percent.

The amounts of cement and mineral admixture used in cementitious material shall be sufficient to satisfy the minimum cementitious material content requirements specified in Section 90-1.01, "Description," or Section 90-4.05, "Optional Use of Chemical Admixtures," of the Standard Specifications and shall conform to the following:

A. The minimum amount of cement shall not be less than 75 percent by mass of the specified minimum cementitious material content.

CONTRACT NO. 04-0120R4

CONTRACT CHANGE ORDER NO 75

SHEET 35 OF 136

B. The minimum amount of mineral admixture to be combined with cement shall be determined using one of the following criteria:

1. When the calcium oxide content of a mineral admixture is equal to or less than 2 percent by mass, the amount of mineral admixture shall not be less than 15 percent by mass of the total amount of cementitious material to be used in the mix.
2. When the calcium oxide content of a mineral admixture is greater than 2 percent by mass, and any of the aggregates used are not listed on the approved list as specified in these special provisions, then the amount of mineral admixture shall not be less than 25 percent by mass of the total amount of cementitious material to be used in the mix.
3. When the calcium oxide content of a mineral admixture is greater than 2 percent by mass and the fine and coarse aggregates are listed on the approved list as specified in these special provisions, then the amount of mineral admixture shall not be less than 15 percent by mass of the total amount of cementitious material to be used in the mix.
4. When a mineral admixture that conforms to the provisions for silica fume in Section 90-2.04, "Admixture Materials," of the Standard Specifications is used, the amount of mineral admixture shall not be less than 10 percent by mass of the total amount of cementitious material to be used in the mix.
5. When a mineral admixture that conforms to the provisions for silica fume in Section 90-2.04, "Admixture Materials," of the Standard Specifications is used and the fine and coarse aggregates are listed on the approved list as specified in these special provisions, then the amount of mineral admixture shall not be less than 7 percent by mass of the total amount of cementitious material to be used in the mix.

C. The total amount of mineral admixture shall not exceed 35 percent by mass of the total amount of cementitious material to be used in the mix. Where Section 90-1.01, "Description," of the Standard Specifications specifies a maximum cementitious content in kilograms per cubic meter, the total mass of cement and mineral admixture per cubic meter shall not exceed the specified maximum cementitious material content.

8-2.02 CORROSION CONTROL FOR PORTLAND CEMENT CONCRETE

Permanent structures with portland cement concrete in contact with soil or rock including that utilized for cast-in-drilled-hole concrete piles, footings, retaining walls and columns, are considered to be in a corrosive environment and shall conform to the provisions in Section 90, "Portland Cement Concrete," of the Standard Specifications and these special provisions.

Cementitious material to be used in portland cement concrete shall conform to the provisions for cement and mineral admixtures in Section 90-2, "Materials," of the Standard Specifications, and shall be a combination of "Type II Modified" portland cement and mineral admixture.

Concrete in a corrosive environment shall contain not less than 400 kg of cementitous material per cubic meter.

No reduction in the cementitious material content specified or ordered, in conformance with the provisions in Section 90-4.05, "Optional Use of Chemical Admixtures," of the Standard Specifications, will be allowed for concrete in a corrosive environment.

Unless otherwise specified, for concrete in a corrosive environment, the amount of cement shall be 75 percent by mass, and the amount of mineral admixture to be combined with cement

CONTRACT NO. 04-0120R4

CONTRACT CHANGE ORDER NO 75

SHEET 36 OF 136

shall be 25 percent by mass, of the total amount of cementitious material to be used in the concrete mix. The calcium oxide content of mineral admixtures shall not exceed 10 percent.

Mineral admixture for concrete in a corrosive environment shall conform to ASTM Designation: C618 Class F or N.

The amount of free water used in concrete in a corrosive environment shall not exceed 160 kg/ m^3, plus 40 kg for each 100 kg of cementitious material in excess of 400 kg/ m^3.

Full compensation for conforming to the above requirements shall be considered as included in the contract prices paid for the various contract items of work and no additional compensation will be allowed therefor.

SECTION 8-3. WELDING

8-3.01 WELDING

GENERAL

Flux core welding electrodes conforming to the requirements of AWS A5.20 E6XT-4 or E7XT-4 shall not be used to perform welding for this project.

Wherever reference is made to the following AWS welding codes in the Standard Specifications, on the plans, or in these special provisions, the year of adoption for these codes shall be as listed:

AWS Code	Year of Adoption
D1.1	2002
D1.4	1998
D1.5	2002
D1.6	1999

Requirements of the AWS welding codes shall apply unless specified otherwise in the Standard Specifications, on the plans, or in these special provisions. Wherever the abbreviation AWS is used, it shall be equivalent to the abbreviations ANSI/AWS or AASHTO/AWS.

Section 6.1.1.1 of AWS D1.5 is replaced with the following:

Quality Control (QC) shall be the responsibility of the Contractor. As a minimum, the Contractor shall perform inspection and testing of each weld joint prior to welding, during welding, and after welding as specified in this section and as necessary to ensure that materials and workmanship conform to the requirements of the contract documents.

Sections 6.1.3 through 6.1.4.3 of AWS D1.1, Section 7.1.2 of AWS D1.4, and Sections 6.1.1.2 through 6.1.3.3 of AWS D1.5 are replaced with the following:

The QC Inspector shall be the duly designated person who acts for and on behalf of the Contractor for inspection, testing, and quality related matters for all welding.

Quality Assurance (QA) is the prerogative of the Engineer. The QA Inspector is the duly designated person who acts for and on behalf of the Engineer.

The QC Inspector shall be responsible for quality control acceptance or rejection of materials and workmanship, and shall be currently certified as an AWS Certified Welding Inspector (CWI) in conformance with the requirements in AWS QC1, " Standard for AWS Certification of Welding Inspectors."

CONTRACT NO. 04-0120R4

CONTRACT CHANGE ORDER NO 75

SHEET 37 OF 136

The QC Inspector may be assisted by an Assistant QC Inspector provided that this individual is currently certified as an AWS Certified Associate Welding Inspector (CAWI) in conformance with the requirements in AWS QC1, "Standard for AWS Certification of Welding Inspectors." The Assistant QC Inspector may perform inspection under the direct supervision of the QC Inspector provided the Assistant is always within visible and audible range of the QC Inspector. The QC Inspector shall be responsible for signing all reports and for determining if welded materials conform to workmanship and acceptance criteria. The ratio of QC Assistants to QC Inspectors shall not exceed 5 to 1.

When the term "Inspector" is used without further qualification, it shall refer to the QC Inspector.

Section 6.14.6, "Personnel Qualification," of AWS D1.1, Section 7.8, "Personnel Qualification," of AWS D1.4, and Section 6.1.3.4, "Personnel Qualification," of AWS D1.5 are replaced with the following:

Personnel performing nondestructive testing (NDT) shall be qualified and certified in conformance with the requirements of the American Society for Nondestructive Testing (ASNT) Recommended Practice No. SNT-TC-1A and the Written Practice of the NDT firm. The Written Practice of the NDT firm shall meet or exceed the guidelines of the ASNT Recommended Practice No. SNT-TC-1A. Individuals who perform NDT, review the results, and prepare the written reports shall be either:

A. Certified NDT Level II technicians, or;
B. Level III technicians who hold a current ASNT Level III certificate in that discipline and are authorized and certified to perform the work of Level II technicians.

Section 6.5.4 of AWS D1.5 is replaced with the following:

The QC Inspector shall inspect and approve each joint preparation, assembly practice, welding technique, joint fit-up, and the performance of each welder, welding operator, and tack welder to make certain that the applicable requirements of this code and the approved Welding Procedure Specification (WPS) are met. The QC Inspector shall examine the work to make certain that it meets the requirements of Sections 3 and 6.26. The size and contour of all welds shall be measured using suitable gages. Visual inspection for cracks in welds and base metal, and for other discontinuities should be aided by strong light magnifiers, or such other devices as may be helpful. Acceptance criteria different from those specified in this code may be used when approved by the Engineer.

Section 6.6.5, "Nonspecified NDT Other than Visual," of AWS D1.1, Section 6.6.5 of AWS D1.4 and Section 6.6.5 of AWS D1.5 shall not apply.

For any welding, the Engineer may direct the Contractor to perform NDT that is in addition to the visual inspection or NDT specified in the AWS or other specified welding codes, in the Standard Specifications, or in these special provisions. Additional NDT required by the Engineer will be paid for as extra work as provided in Section 4-1.03D, "Extra Work," of the Standard Specifications. Should any welding deficiencies be discovered by this additional NDT, all costs associated with the repair of the deficient area, including NDT of the weld and of the weld repair, and any delays caused by the repair, shall be at the Contractor's expense.

CONTRACT NO. 04-0120R4

CONTRACT CHANGE ORDER NO 75

SHEET 38 OF 136

Repair work to correct welding deficiencies discovered by visual inspection or NDT, or by additional NDT directed or performed by the Engineer, and any associated delays or expenses caused to the Contractor by performing these repairs, shall be at the Contractor's expense.

The Engineer shall have the authority to verify the qualifications or certifications of any welder, QC Inspector, or NDT personnel to specified levels by retests or other means approved by the Engineer.

Continuous inspection shall be provided when any welding is being performed. Continuous inspection, as a minimum, shall include having a QC Inspector within such close proximity of all welders or welding operators so that inspections by the QC Inspector of each welding operation at each welding location shall not lapse for a period exceeding 30 minutes.

Inspection and approval of all joint preparations, assembly practices, joint fit-ups, welding techniques, and the performance of each welder, welding operator, and tack welder shall be documented by the QC Inspector on a daily basis for each day welding is performed. For each inspection, including fit-up, Welding Procedure Specification (WPS) verification, and final weld inspection, the QC Inspector shall confirm and document compliance with the requirements of the AWS or other specified code criteria and the requirements of these special provisions on all welded joints before welding, during welding, and after the completion of each weld.

When joint weld details that are not prequalified to the details of Section 3 of AWS D1.1 or to the details of Figure 2.4 or 2.5 of AWS D1.5 are proposed for use in the work, the joint details, their intended locations, and the proposed welding parameters and essential variables, will be approved by the Engineer. The Engineer shall have 2 weeks to complete the review of the proposed joint detail locations. In the event the Engineer fails to complete the review within the time allowed, and if, in the opinion of the Engineer, completion of the work is delayed or interfered with by reason of the Engineer's delay in completing the review, the Contractor will be compensated for any resulting loss, and an extension of time will be granted, in the same manner as provided for in Section 8-1.09, "Right of Way Delays," of the Standard Specifications. Upon approval of the proposed joint detail locations and qualification of the proposed joint details, welders and welding operators using these details shall perform a qualification test plate using the WPS variables and the joint detail to be used in production. The test plate shall have the maximum thickness to be used in production and a minimum length of 180 mm and minimum finish welded width 460 mm. The test plate shall be mechanically and radiographically tested. Mechanical and radiographic testing and acceptance criteria shall be as specified in the applicable AWS codes.

In addition to the requirements specified in the applicable code, the period of effectiveness for a welder's or welding operator's qualification shall be a maximum of 3 years for the same weld process, welding position, and weld type. If production welding will be performed without gas shielding, then qualification shall also be without gas shielding. Excluding welding of fracture critical members, a valid qualification at the beginning of work on a contract will be acceptable for the entire period of the contract, as long as the welder's or welding operator's work remains satisfactory.

The Engineer will witness all qualification tests for WPSs that were not previously approved by the Department. An approved independent third party will witness the qualification tests for welders or welding operators. The independent third party shall be a current CWI and shall not be employed by the contractor performing the welding. The Engineer shall have 2 weeks to review the qualifications and copy of the current certification of the independent third party. In the event the Engineer fails to complete the review within the time allowed, and if, in the opinion of the Engineer, completion of the work is delayed or interfered with by reason of the Engineer's

CONTRACT NO. 04-0120R4

CONTRACT CHANGE ORDER NO 75

SHEET 39 OF 136

delay in completing the review, the Contractor will be compensated for any resulting loss, and an extension of time will be granted, in the same manner as provided for in Section 8-1.09, "Right of Way Delays," of the Standard Specifications. The Contractor shall notify the Engineer one week prior to performing any qualification tests. Witnessing of qualification tests by the Engineer shall not constitute approval of the intended joint locations, welding parameters, or essential variables.

In addition to the requirements of AWS D1.5 Section 5.12 or 5.13, welding procedures qualification, for work welded in conformance with that code, shall conform to the following requirements:

A. Unless considered prequalified, fillet welds, including reinforcing fillet welds, shall be qualified in each position. The fillet weld soundness test shall be conducted using the essential variables of the WPS as established by the Procedure Qualification Record (PQR.)
B. For qualification of joints that do not conform to Figures 2.4 and 2.5 of AWS D1.5, two WPS qualification tests are required. The tests conforming to AWS D1.5 Section 5.13 shall be conducted using both Figure 5.1 and Figure 5.3. The test conforming to Figure 5.3 shall be conducted using the same welding electrical parameters that were established for the test conducted conforming to Figure 5.1.
C. The travel speed, current, and voltage values that are used for tests conducted per AWS D1.5 Section 5.12 or 5.13 shall be consistent for each weld joint, and shall in no case vary by more than 10 percent for travel speed, 10 percent for current, and 7 percent for voltage.
D. For a WPS qualified in conformance with AWS D1.5 Section 5.13, the values to be used for calculating ranges for current and voltage shall be based on the average of all weld passes made in the test. Heat input shall be calculated using the average of current and voltage of all weld passes made in the test for a WPS qualified in conformance with Section 5.12 or 5.13.
E. To qualify for unlimited material thickness, two qualification tests are required for WPSs utilized for welding material thicknesses greater than 38 mm. One test shall be conducted using 20-mm thick test plates, and one test shall be conducted using test plates with a thickness between 38 mm and 50 mm. Two maximum heat input tests may be conducted for unlimited thickness qualification.
F. Macroetch tests are required for WPS qualification tests, and acceptance shall be per AWS D1.5 Section 5.19.3.
G. When a weld joint is to be made using a combination of qualified WPSs, each process shall be qualified separately.
H. When a weld joint is to be made using a combination of qualified and prequalified processes, the WPS shall reflect both processes and the limitations of essential variables, including weld bead placement, for both processes.
I. Prior to preparing mechanical test specimens, the PQR welds shall be inspected by visual and radiographic tests. Backing bar shall be 75 mm in width and shall remain in place during NDT testing. Results of the visual and radiographic tests shall comply with AWS D1.5 Section 6.26.2, excluding Section 6.26.2.2. Test plates that do not comply with both tests shall not be used.

CONTRACT NO. 04-0120R4

CONTRACT CHANGE ORDER NO 75

SHEET 40 OF 136

WELDING QUALITY CONTROL

Welding quality control shall conform to the requirements in the AWS or other specified welding codes, the Standard Specifications, and these special provisions.

Unless otherwise specified, welding quality control shall apply when any work is welded in conformance with the provisions in Section 49, "Piling," Section 52, "Reinforcement," Section 55, "Steel Structures," or Section 75-1.035, "Bridge Joint Restrainer Units," of the Standard Specifications.

The welding of fracture critical members (FCMs) shall conform to the provisions specified in the Fracture Control Plan (FCP) and herein.

The Contractor shall designate in writing a welding Quality Control Manager (QCM). The QCM shall be responsible directly to the Contractor for the quality of welding, including materials and workmanship, performed by the Contractor and subcontractors.

The QCM shall be the sole individual responsible to the Contractor for submitting, receiving, reviewing, and approving all correspondence, required submittals, and reports to and from the Engineer. The QCM shall be a registered professional engineer or shall be currently certified as a CWI or a CAWI.

The QCM shall not be employed or compensated by any subcontractor, or by other persons or entities hired by subcontractors, who will provide other services or materials for the project. The QCM may be an employee of the Contractor.

Welding inspection personnel or NDT firms to be used in the work shall not be employed or compensated by any subcontractor, or by other persons or entities hired by subcontractors, who will provide other services or materials for the project, except for the following conditions:

A. The work is welded in conformance with AWS D1.5 and is performed at a permanent fabrication or manufacturing facility which is certified under the AISC Quality Certification Program, Category Cbr, Major Steel Bridges and Fracture Critical endorsement F.
B. The welding is performed on pipe pile material at a permanent pipe manufacturing facility authorized to apply the American Petroleum Institute (API) monogram for API 5L pipe.

For welding performed at such facilities, the inspection personnel or NDT firms may be employed or compensated by the facility performing the welding.

Prior to submitting the Welding Quality Control Plan (WQCP) required herein, a pre-welding meeting between the Engineer, the Contractor's QCM, and a representative from each entity performing welding or inspection for this project, shall be held to discuss the requirements for the WQCP.

The Contractor shall submit to the Engineer, in conformance with the provisions in "Working Drawings," of these special provisions, 2 copies of a separate WQCP for each subcontractor or supplier for each item of work for which welding is to be performed.

The Contractor shall allow the Engineer 2 weeks to review the WQCP submittal after a complete plan has been received. No welding shall be performed until the WQCP is approved in writing by the Engineer. In the event the Engineer fails to complete the review within the time allowed, and if, in the opinion of the Engineer, completion of the work is delayed or interfered with by reason of the Engineer's delay in completing the review, the Contractor will be

CONTRACT NO. 04-0120R4

CONTRACT CHANGE ORDER NO 75

SHEET 41 OF 136

compensated for any resulting loss, and an extension of time will be granted, in the same manner as provided for in Section 8-1.09, "Right of Way Delays," of the Standard Specifications.

An amended WQCP or any addendum to the approved WQCP shall be submitted to, and approved in writing by the Engineer, for proposed revisions to the approved WQCP. An amended WQCP or addendum will be required for revisions to the WQCP, including but not limited to a revised WPS; additional welders; changes in NDT firms, QC, or NDT personnel or procedures; or updated systems for tracking and identifying welds. The Engineer shall have 1 week to complete the review of the amended WQCP or addendum. Work affected by the proposed revisions shall not be performed until the amended WQCP or addendum has been approved. In the event the Engineer fails to complete the review within the time allowed, and if, in the opinion of the Engineer, completion of the work is delayed or interfered with by reason of the Engineer's delay in completing the review, the Contractor will be compensated for any resulting loss, and an extension of time will be granted, in the same manner as provided for in Section 8-1.09, "Right of Way Delays," of the Standard Specifications.

Information regarding the contents, format, and organization of a WQCP, is available at the Transportation Laboratory or the following website:

http://www.dot.ca.gov/hq/esc/Translab/smbresources.htm

After final approval of the WQCP, amended WQCP, or addendum, the Contractor shall submit 7 copies to the Engineer of the approved documents. A copy of the Engineer approved document shall be available at each location where welding is to be performed.

A daily production log for welding shall be kept for each day that welding is performed. The log shall clearly indicate the locations of all welding. The log shall include the welders' names, amount of welding performed, any problems or deficiencies discovered, and any testing or repair work performed, at each location. The daily report from each QC Inspector shall also be included in the log.

The following items shall be included in a Welding Report that is to be submitted to the Engineer within 10 days following the performance of any welding:

A. Reports of all visual weld inspections and NDT.
B. Radiographs and radiographic reports, and other required NDT reports.
C. Documentation that the Contractor has evaluated all radiographs and other nondestructive tests and corrected all rejectable deficiencies, and all repaired welds have been reexamined by the required NDT and found acceptable.
D. Daily production log.

The following information shall be clearly written on the outside of radiographic envelopes: name of the QCM, name of the nondestructive testing firm, name of the radiographer, date, contract number, complete part description, and all included weld numbers or a report number, as detailed in the WQCP. In addition, all innerleaves shall have clearly written on them the part description and all included weld numbers, as detailed in the WQCP.

Reports regarding NDT shall be signed by both the NDT technician and the person that performed the review, and then submitted directly to the QCM for review and signature prior to submittal to the Engineer. Corresponding names shall be clearly printed or typewritten next to all signatures.

CONTRACT NO. 04-0120R4

CONTRACT CHANGE ORDER NO 75

SHEET 42 OF 136

The Engineer will review the Welding Report to determine if the Contractor is in conformance with the WQCP. Unless otherwise specified, the Engineer shall be allowed 10 days to review the report and respond in writing after a complete Welding Report has been received. Prior to receiving notification from the Engineer of the Contractor's conformance with the WQCP, the Contractor may encase in concrete or cover welds for which a Welding Report has been submitted. However, should the Contractor elect to encase or cover those welds prior to receiving notification from the Engineer, it is expressly understood that the Contractor shall not be relieved of the responsibility for incorporating material in the work that conforms to the requirements of the plans and specifications. Material not conforming to these requirements will be subject to rejection. Should the Contractor elect to wait to encase or cover welds pending notification by the Engineer, and in the event the Engineer fails to complete the review within the time allowed, and if, in the opinion of the Engineer, completion of the work is delayed or interfered with by reason of the Engineer's delay in completing the review, the Contractor will be compensated for any resulting loss, and an extension of time will be granted, in the same manner as provided for in Section 8-1.09, "Right of Way Delays," of the Standard Specifications.

The QC Inspector shall provide reports to the QCM on a daily basis for each day that welding is performed.

Except for noncritical weld repairs, the Engineer shall be notified immediately in writing when welding problems, deficiencies, base metal repairs, or any other type of repairs not submitted in the WQCP are discovered, and also of the proposed repair procedures to correct them. The Contractor shall allow the Engineer one week to review these procedures. No remedial work shall begin until the repair procedures are approved in writing by the Engineer. In the event the Engineer fails to complete the review within the time allowed, and if, in the opinion of the Engineer, completion of the work is delayed or interfered with by reason of the Engineer's delay in completing the review, the Contractor will be compensated for any resulting loss, and an extension of time will be granted, in the same manner as provided for in Section 8-1.09, "Right of Way Delays," of the Standard Specifications.

The QCM shall sign and furnish to the Engineer, a Certificate of Compliance in conformance with the provisions in Section 6-1.07, "Certificates of Compliance," of the Standard Specifications for each item of work for which welding was performed. The certificate shall state that all of the materials and workmanship incorporated in the work, and all required tests and inspections of this work, have been performed in conformance with the details shown on the plans, the Standard Specifications, and these special provisions.

PAYMENT

Full compensation for conforming to the requirements of "Welding" shall be considered as included in the contract prices paid for the various items of work involved and no additional compensation will be allowed therefor.

SECTION 9. DESCRIPTION OF BRIDGE WORK

The bridge work to be done consists, in general, of constructing portions of the following structures as shown on the plans:

SAN FRANCISCO OAKLAND BAY BRIDGE EAST SPAN
YBI TRANSITION STRUCTURES, BENT 7 WESTBOUND AND EASTBOUND

CONTRACT NO. 04-0120R4

CONTRACT CHANGE ORDER NO 75

SHEET 43 OF 136

SUBSTRUCTURES ONLY
(Bridge No. 34-0006 L/R)

SECTION 10. CONSTRUCTION DETAILS

SECTION 10-1. GENERAL

10-1.01 ORDER OF WORK

Order of work shall conform to the provisions in Section 5-1.05, "Order of Work," of the Standard Specifications and these special provisions.

Attention is directed to "Water Pollution Control" of these special provisions for an amendment to the Storm Water Pollution Prevention Plan Preparation, which is required for the scope of work for the Contract Change Order, prior to performing work having potential to cause water pollution.

10-1.02 WATER POLLUTION CONTROL

The Contractor shall fully comply with "Water Pollution Control," of the contract special provisions for the Contract 04-0120R4 for preparation of an amendment to the existing Storm Water Pollution Prevention Plan (SWPPP) and amending the Sampling and Analysis Plan (SAP) to cover the scope of work for the Contract Change Order.

Attention is directed to "Retention of Funds", "SWPPP Implementation", "Maintenance", "Reporting Requirements", "Sampling and Analytical Requirements" within "Water Pollution Control," of the contract special provisions for the Contract 04-0120R4.

The SWPPP amendment shall conform to the Section "Storm Water Pollution Prevention Plan Preparation, Approval and Amendments," of Section 10-1.02 "Water Pollution Control, of the Contract special provisions.

The Contractor shall develop a Water Pollution Control Schedule that describes the timing of grading or other work activities that could affect water pollution. The Water Pollution Control Schedule shall be updated by the Contractor to reflect changes in the Contractor's operations that would affect the necessary implementation of water pollution control practices.

The Contractor shall complete the "Construction Site BMPs Consideration Checklist" presented in the Preparation Manual and shall incorporate water pollution control practices into the SWPPP amendment. Water pollution control practices include the "Minimum Requirements" and other Contractor-selected water pollution control practices from the "Construction Site BMPs Consideration Checklist" and the "Project-Specific Minimum Requirements" identified in the Water Pollution Control Cost Break-Down of this section.

The following contract items of work shall be incorporated into the SWPPP amendment as "Temporary Water Pollution Control Practices": Temporary Cover, Temporary Silt Fence, Temporary Drainage Inlet Protection, Temporary Concrete Washout Facility, Temporary Construction Entrance. The Contractor's attention is directed to the special provisions provided for Temporary Water Pollution Control Practices.

The following contract items of work, as shown on the project plans or as specified elsewhere in these special provisions, shall be identified in the SWPPP amendment as permanent water pollution control practices: Erosion Control Netting, and Fiber Rolls. These permanent water pollution control practices shall be constructed as specified in these special provisions, and utilized during the construction period. The Contractor shall maintain and protect the permanent

CONTRACT NO. 04-0120R4

CONTRACT CHANGE ORDER NO 75

SHEET 44 OF 136

water pollution control practices throughout the duration of the project and shall restore these controls to the lines, grades and condition shown on the plans prior to acceptance of the contract.

The SWPPP amendment shall include, but not be limited to, the items described in the Manuals, Permits and related information contained in the contract documents.

The Contractor shall prepare an amendment to the SWPPP when there is a change in construction activities or operations which may affect the discharge of pollutants to surface waters, ground waters, municipal storm drain systems, or when the Contractor's activities or operations violate a condition of the Permits, or when directed by the Engineer. Amendments shall identify additional water pollution control practices or revised operations, including those areas or operations not identified in the initially approved SWPPP. Amendments to the SWPPP shall be prepared and submitted for review and approval within a time approved by the Engineer, but in no case longer than the time specified for the initial submittal and review of the SWPPP. At a minimum, the SWPPP shall be amended annually and submitted to the Engineer 25 days prior to the defined rainy season.

The Contractor shall keep one copy of the approved SWPPP and approved amendments at the project site. The SWPPP shall be made available upon request by a representative of the Regional Water Quality Control Board, State Water Resources Control Board, United States Environmental Protection Agency, or the local storm water management agency. Requests by the public shall be directed to the Engineer.

COST BREAK-DOWN

The Contractor shall include a Water Pollution Control Cost Break-Down in the SWPPP amendment which itemizes the contract lump sum for water pollution control work. The Contractor shall use the Water Pollution Control Cost Break-Down provided in this section as the basis for the cost break-down submitted with the SWPPP amendment. The Contractor shall use the Water Pollution Control Cost Break-Down to identify items, quantities and values for water pollution control work, excluding Temporary Water Pollution Control Practices for which there are separate bid items. The Contractor shall be responsible for the accuracy of the quantities and values used in the cost break-down submitted with the SWPPP amendment. Partial payment for the item of water pollution control will not be made until the Water Pollution Control Cost Break-Down is approved by the Engineer.

Line items indicated in the Water Pollution Control Cost Break-Down in this section with a specified Estimated Quantity shall be considered "Project-Specific Minimum Requirements." The Contractor shall incorporate Project-Specific Minimum Requirements with Contractor-designated quantities and values into the Water Pollution Control Cost Break-Down submitted with the SWPPP amendment.

Line items indicated in the Water Pollution Control Cost Break-Down in this section without a specified Estimated Quantity shall be considered by the Contractor for selection to meet the applicable "Minimum Requirements" as defined in the Manuals, or for other water pollution control work as identified in the "Construction Site BMPs Consideration Checklist" presented in the Preparation Manual. In the Water Pollution Control Cost Break-Down submitted with the SWPPP amendment, the Contractor shall list only those water pollution control practices selected for this Contract Change Order , including quantities and values required to complete the work for those items.

CONTRACT NO. 04-0120R4

CONTRACT CHANGE ORDER NO 75

SHEET 45 OF 136

The sum of the amounts for the items of work listed in the Water Pollution Control Cost Break-Down shall be equal to the contract lump sum price bid for water pollution control. Overhead and profit, shall be included in the individual items listed in the cost break-down.

WATER POLLUTION CONTROL COST BREAK-DOWN

(CCO No. 64)

ITEM	ITEM DESCRIPTION	UNIT	ESTIMATED QUANTITY	VALUE	AMOUNT
SS-8	Wood Mulching	M2			
SS-9	Earth Dikes/Drainage Swales & Lined Ditches	M			
SS-10	Outlet Protection/Velocity Dissipation Devices	EA			
SS-11	Slope Drains	M			
SC-7	Street Sweeping and Vacuuming	LS			
WE-1	Wind Erosion Control	LS			
NS-3	Paving and Grinding Operations	LS			
NS-6	Illicit Connection/Illegal Discharge Detection and Reporting	LS			
NS-8	Vehicle and Equipment Cleaning	LS			
NS-9	Vehicle and Equipment Fueling	LS			
NS-10	Vehicle and Equipment Maintenance	LS			
WM-1	Material Delivery and Storage	LS			
WM-2	Material Use	LS			
WM-4	Spill Prevention and Control	LS			
WM-5	Solid Waste Management	LS			
WM-6	Hazardous Waste Management	LS			
WM-9	Sanitary/Septic Waste Management	LS			

TOTAL _____

Adjustments in the items of work and quantities listed in the approved cost break-down shall be made when required to address amendments to the SWPPP, except when the adjusted items are paid for as extra work.

No adjustment in compensation will be made to the contract lump sum price paid for water pollution control due to differences between the quantities shown in the approved cost break-down and the quantities required to complete the work as shown on the approved SWPPP amendment. No adjustment in compensation will be made for ordered changes to correct

CONTRACT NO. 04-0120R4

CONTRACT CHANGE ORDER NO 75

SHEET 46 OF 136

SWPPP work resulting from the Contractor's own operations or from the Contractor's negligence.

The approved cost break-down will be used to determine partial payments during the progress of the work and as the basis for calculating the adjustment in compensation for the item of water pollution control due to increases or decreases of quantities ordered by the Engineer. When an ordered change increases or decreases the quantities of an approved cost break-down item, the adjustment in compensation will be determined in the same manner specified for increases and decreases in the quantity of a contract item of work in conformance with the provisions in Section 4-1.03B, "Increased or Decreased Quantities," of the Standard Specifications. If an ordered change requires a new item which is not on the approved cost break-down, the adjustment in compensation will be determined in the same manner specified for extra work in conformance with Section 4-1.03D, "Extra Work," of the Standard Specifications.

If requested by the Contractor and approved by the Engineer, changes to the water pollution control practices listed in the approved cost break-down, including addition of new water pollution control practices, will be allowed. Changes shall be included in the approved amendment of the SWPPP. If the requested changes result in a net cost increase to the lump sum price for water pollution control, an adjustment in compensation will be made without change to the water pollution control item. The net cost increase to the water pollution control item will be paid for as extra work as provided in Section 4-1.03D, "Extra Work," of the Standard Specifications.

PAYMENT

The contract lump sum price paid for prepare storm water pollution prevention plan amendment shall include full compensation for furnishing all labor, materials, tools, equipment, and incidentals for doing all the work involved in developing, preparing, obtaining approval of, revising, and amending the SWPPP, as specified in the Standard Specifications and these special provisions, and as directed by the Engineer.

Attention is directed to Section 9-1.06, "Partial Payments," and Section 9-1.07, "Payment After Acceptance," of the Standard Specifications. Payments for prepare storm water pollution prevention plan will be made as follows:

A. After the SWPPP Amendment has been approved by the Engineer, 75 percent of the contract item price for prepare storm water pollution prevention plan will be included in the monthly partial payment estimate.
B. After acceptance of the contract in conformance with the provisions in Section 7-1.17, "Acceptance of Contract," of the Standard Specifications, payment for the remaining 25 percent of the contract item price for prepare storm water pollution prevention plan amendment will be made in conformance with the provisions in Section 9-1.07.

The contract lump sum price paid for water pollution control shall include full compensation for furnishing all labor, materials, tools, equipment, and incidentals, and for doing all the work involved in installing, constructing, removing, and disposing of water pollution control practices, including non-storm water management, and waste management and materials pollution water pollution control practices, except those for which there is a contract item of work as specified in the Standard Specifications and these special provisions, and as directed by the Engineer.

CONTRACT NO. 04-0120R4

CONTRACT CHANGE ORDER NO 75

SHEET 47 OF 136

Storm water sampling and analysis will be paid for as extra work as provided in Section 4-1.03D, "Extra Work," of the Standard Specifications. No payment will be made for the preparation, collection, analysis, and reporting of storm water samples required where appropriate BMPs are not implemented prior to a rain event, or if a failure of a BMP is not corrected prior to a rain event.

For items identified on the approved Water Pollution Control Cost Break-Down, the cost of maintaining the temporary water pollution control practices shall be divided equally by the State and the Contractor as follows:

Soil Stabilization

Temporary water pollution control practices except:
SS-1 Scheduling
SS-2 Preservation of Existing Vegetation

Sediment Control

Temporary water pollution control practices except:
SC-7 Street Sweeping and Vacuuming

Wind Erosion Control

No sharing of maintenance costs will be allowed.

Tracking Control

No sharing of maintenance costs will be allowed.

Non-Storm Water Management

No sharing of maintenance costs will be allowed.

Waste Management & Materials Pollution Control

No sharing of maintenance costs will be allowed.

The division of cost will be made by determining the cost of maintaining water pollution control practices in conformance with the provisions in Section 9-1.03, "Force Account Payment," of the Standard Specifications and paying to the Contractor one-half of that cost. Cleanup, repair, removal, disposal, improper installation, and replacement of water pollution control practices damaged by the Contractor's negligence, shall not be considered as included in the cost for performing maintenance.

The provisions for sharing maintenance costs shall not relieve the Contractor from the responsibility for providing appropriate maintenance on items with no shared maintenance costs.

Full compensation for non-shared maintenance costs of water pollution control practices, as specified in this section, "Water Pollution Control," shall be considered as included in the contract lump sum price paid for water pollution control and no additional compensation will be allowed therefor.

Water pollution control practices for which there is a contract item of work, will be measured and paid for as that contract item of work.

CONTRACT NO. 04-0120R4

CONTRACT CHANGE ORDER NO 75

SHEET 48 OF 136

10-1.03 NON-STORM WATER DISCHARGES

Non-storm water discharges shall conform to the requirements in Section 7-1.01G, "Water Pollution" of the Standard Specifications, "Water Pollution Control" of these special provisions, and these special provisions.

MARINE EXCAVATION DEWATERING

The discharge of floating oil or other floating materials is prohibited. Suspended solids shall be removed to the extent that deleterious bottom deposits, turbidity, and discoloration are not caused by the discharge. Turbidity shall be measured in Nephelometric Turbidity Units (NTU). The point of effluent discharge shall not cause bottom sediments or aquatic vegetation to become dislodged or disturbed.

The Contractor shall describe dewatering operation in the Dewatering Plan as specified under "Land-Based Excavation Dewatering."

The Contractor shall monitor both the discharge and the receiving water body in conformance with the provisions in Order No. R2-2002-0011, "Waste Discharge Requirements for San Francisco-Oakland Bay Bridge East Span Seismic Safety Project (East Span Project), City and County of San Francisco and City of Oakland, Alameda County," issued by the San Francisco Bay Regional Water Quality Control Board and these special provisions. Copies of the permit are available for inspection at the Department of Transportation, Duty Senior's Desk, 111 Grand Avenue, Oakland, California, email; duty_senior_district04@dot.ca.gov, telephone (510) 286-5209 The observations made during monitoring shall include the color difference, presence of suspended material, presence of water fowl or aquatic wildlife, wind direction and velocity, tidal condition, atmospheric condition, time, and date. In addition, the Contractor shall supplement the observations with photographs. During monitoring events, the Contractor shall obtain depth-averaged turbidity, dissolved oxygen, and pH measurements for the discharge and receiving water. Depth-averaged measurements shall be obtained by taking measurements from 3 points within the water column and averaging the 3 measurements: one at 0.3 m below the surface, one at mid depth, and one at 0.3 m above the bottom. In receiving waters that are less than 1.0 meter in depth, only one measurement shall be taken at 0.3 m below the surface. All field recorded data shall be obtained and recorded in the presence of the Engineer. Only meters that are approved by the Engineer shall be used for obtaining field measurements. The Contractor shall submit a copy of the manufacturer specifications for all measuring instruments used including the operating instructions, the calibration instructions and calibration log. All calibrations shall be done in accordance with the manufacturer's instructions and in the presence of the Engineer.

The Contractor shall conduct monitoring, at a minimum, one hour before discharge, ten minutes after initiating discharge, four hours after initiating discharge, once daily after the initial startup monitoring, and upon cessation of discharge. The receiving water turbidity, dissolved oxygen, and pH shall be measured at a location that is unaffected by the discharge at the same frequency as the discharge monitoring. The observations, turbidity, dissolved oxygen, and pH measurements shall be recorded daily in a tabular format provided within the Storm Water Pollution Prevention Plan, as described within "Water Pollution Control" of these special provisions. The daily report shall include photographs and shall be provided daily to the Engineer prior to close of business for each working day.

The following increases in natural background turbidity, pH, and dissolved oxygen of the receiving water will be allowed:

CONTRACT NO. 04-0120R4

CONTRACT CHANGE ORDER NO 75

SHEET 49 OF 136

Water Quality Parameter	Water Quality Limit
Natural Background Turbidity	
0 to 49 NTU	Receiving water turbidity may be increased to 50 NTU
50 NTU and greater	10 percent incremental increase
Natural background pH	± 0.5 pH units
Natural Background Dissolved Oxygen	5 mg/L minimum

In the event that observations and measurements indicate that a discharge is having an effect on receiving water by more than allowed and the effect is confirmed by an additional measurement obtained no less than 15 minutes and no more than 1 hour after the initial measurement, the discharge activity shall immediately cease, and corrective actions undertaken to modify, repair, or replace the equipment used for the discharge. The resumption of discharge activities will be allowed upon approval of the corrective measures by the Engineer.

LAND-BASED EXCAVATION DEWATERING

This work shall include discharging water from land-based excavations including, but not limited to, excavations for pile caps or footings, piles, storm drainage systems, sanitary sewer systems, utility facilities, walls and appurtenances. These provisions shall not apply to seepage from seasonal percolation of rainwater at elevations greater than 6.0 m, except that those dewatering operations shall be described in the Dewatering Plan as specified herein. Discharges from elevations greater than 6.0 m shall be performed in conformance with Order No. R2-2002-0011, including allowable increases in natural background turbidity, pH, and dissolved oxygen, and "Water Pollution Control" of these special provisions.

Excavation dewatering shall be performed in conformance with the requirements of San Francisco - Public Utilities Commission (SF-PUC) Batch Discharge Permit and Authorization Letter issued on October 5, 2004.

The Contractor shall be fully informed of the provisions of the permit and conduct the work accordingly.

At the option of the Contractor, water removed from the excavation may be hauled off site to an appropriately licensed liquid disposal facility in accordance with Section 7-1.13, "Disposal of Material Outside the Highway Right of Way," of the Standard Specifications.

Surface runoff shall not be allowed to enter the excavation. Groundwater contaminated by the Contractor's operations, such as the use of slurry to construct cast-in-place piles, shall be treated to meet the permit requirements for discharge or removed from the site to an appropriately licensed liquid disposal facility in accordance with Section 7-1.13, "Disposal of Material Outside the Highway Right of Way," of the Standard Specifications.

Based on the material type and groundwater gradients within the project limits, it is expected that the groundwater flow rate will be up to 180.0 L/minute. The treatment facility shall be designed to accommodate this flow rate. Continuous pumping from well points outside the excavations will not be allowed. The Contractor shall use construction methods that prevent cross-contamination of water-bearing zones caused by the flow of contaminated groundwater into piling excavations including, but not limited to, sheet piling, pipe pile extensions, and casing or shells. Seal course and cofferdams shall be used to control water in conformance with the provisions of Section 19-3.04, "Water Control and Foundation Treatment," of the Standard

CONTRACT NO. 04-0120R4

CONTRACT CHANGE ORDER NO 75

SHEET 50 OF 136

Specifications from "WD1" 52+40 to "WD1" 54+80 when groundwater is to be encountered. A meter that has been approved by the Engineer shall be used to measure all excavation discharges.

Treated groundwater shall be used for dust control up to the extent that sheet flow or ponding becomes imminent. When further use of the treated water as dust control would result in sheet flow or ponding, the water shall be discharged at an approved dedicated discharge point.

Analysis results of grab samples from groundwater within the limits of the project are summarized in the following table:

GROUNDWATER CONTAMINANT SUMMARY

Sample ID.	W5LC	EB6R	EB7R
Metals			
Antimony	0.010		
Arsenic	0.22		
Barium	2.5		
Beryllium	<0.0030		
Cadmium	<0.0030		
Chromium	1.2		
Cobalt	0.34		
Copper	0.27		
Lead	0.10		
Mercury	<0.0040		
Molybdenum	<0.0050		
Nickel	1.4		
Selenium	<0.0050		
Silver	<0.0030		
Thallium	<0.0050		
Vanadium	0.66		
Zinc	0.71		
VOCs	Benzene = 0.00088 M,p-Xylene = 0.00080 o-Xylene = 0.0016 1,2,4-Trimethyl-benzene = 0.0063 Naphthalene = 0.039	< 0.005	< 0.005
SVOCs	2-Methyl-naphthalene = 0.068 Fluorene = 0.011 Naphthalene = 0.031 Phenanthrene = 0.011	ND	ND
TPHg	0.57	< 0.050	0.12
TPHd	13	160	1200
TPHmo	9.1		

CONTRACT NO. 04-0120R4

CONTRACT CHANGE ORDER NO 75

SHEET 51 OF 136

GROUNDWATER CONTAMINANT SUMMARY (CONT.)

Sample ID.	EB8L	EB9L	EB10R	EB13L	EB14R
Metals					
Antimony				0.0093	0.010
Arsenic				0.010	0.030
Barium				0.67	1.1
Beryllium				<0.0010	<0.0010
Cadmium				<0.0030	<0.0030
Chromium				<0.0030	0.050
Cobalt				0.0036	0.010
Copper				0.040	0.29
Lead				0.14	4.1
Mercury				<0.0040	<0.0040
Molybdenum				0.010	0.010
Nickel				<0.0030	0.040
Selenium				0.0079	0.0060
Silver				0.0096	0.010
Thallium				<0.0050	<0.0050
Vanadium				0.0041	0.040
Zinc				0.21	2.4
VOCs	< 5.0			<0.005	< 0.005
SVOCs	2-Methyl-naphthalene = 13 Phenanthrene = 12	ND	ND	Phenanthrene = .093	ND
TPHg	0.3			0.33	0.48
TPHd	44	3.1	5.6	36	440
TPHmo					

Notes:
Concentrations are shown in milligrams per liter.
Sample locations are shown in the "Materials Information"
When no concentration is given, samples were not analyzed for that group of contaminants.
Abbreviations:
ND Not detected above laboratory reporting limit
VOCs Volatile Organic Compounds
SVOCs Semi-Volatile Organic Compounds
TPHg Total Petroleum Hydrocarbons as gasoline
TPHd Total Petroleum Hydrocarbons as diesel
TPHmo Total Petroleum Hydrocarbons as motor oil

The Contractor shall submit to the Engineer, as specified in "Working Drawing," of these special provisions, a Dewatering Plan that includes the following:

A. Dewatering Operation Description - written description of all dewatering operations that shall include, but is not limited to, start up date of discharge, an estimate of the discharge volume, flow rate, frequency, and maximum capacity of the treatment facility.
B. Certification of Treatment Facility Design - report describing the adequacy of (1) the process and design of the treatment facility to meet treatment objectives, (2) the startup and operation instruction manuals, (3) the treatment facility maintenance and testing program; and (4) the influent and effluent sampling locations. This certification shall be prepared and signed by an engineer who is registered as a Civil Engineer in the State of California.

CONTRACT NO. 04-0120R4

CONTRACT CHANGE ORDER NO 75

SHEET 52 OF 136

C. Treatment Facility Operation and Maintenance Manual - manual of operation for the treatment facility that describes staffing and training, quality control and assurance, inspection and maintenance, monitoring, records keeping, and preventative and contingency plans for controlling accidental discharges.
D. Working Drawings - working drawings of dewatering operations showing both a sectional and plan view that details the removal techniques for suspended solids and known or introduced groundwater contaminants. The drawings shall define the flow path and placement of pipes, hoses, pumps, treatment systems, holding tanks, and other equipment used to convey the discharge; the general position of the dewatering measures relative to the excavations undergoing dewatering; and the point of effluent discharge.

The plan shall be submitted 25 working days before beginning dewatering operations for review and approval by the Engineer. Excavation operations that require dewatering will not be allowed until the plan has been approved by the Engineer. At the time of approval, the Contractor shall incorporate the dewatering plan into the approved SWPPP via the established amendment process as described within "Water Pollution Control" of these special provisions.

Monitoring of discharges shall conform to the requirements of the SF-PUC Batch Discharge Permit and Authorization Letter and these special provisions.

In addition to the monitoring requirements of the SF-PUC Batch Discharge Permit and Authorization Letter, the Contractor shall monitor the discharge for turbidity. Turbidity shall be measured in Nephelometric Turbidity Units (NTU).

In the event of a violation of the maximum daily limits or turbidity measurement greater than 50 NTU occurs and is confirmed by an additional measurement obtained no less than 15 minutes and no more than 1 hour after the initial measurement, the discharge activity shall be shutdown and corrective actions shall be taken to modify, repair, or replace the equipment used for the discharge. The resumption of discharge activities shall be allowed upon approval of the corrective measures by the Engineer.

EFFLUENT TREATMENT FACILITY

An effluent treatment facility shall be provided to treat petroleum contaminated water discharged from dewatering operations. Effluent shall be considered as the water and any other material discharged from the dewatering operations.

The Contractor shall use the effluent treatment facility to treat water from excavations before discharging to an approved discharge site in accordance with the SF-PUC Batch Discharge Permit and Authorization Letter and these special provisions.

Materials shall conform to the provisions in Section 6, "Control of Materials," Section 7-1.16, "Contractor's Responsibility for the Work and Materials," Section 20-5.03E, "Pipe," and Section 74-2, "Drainage Pump Equipment" of the Standard Specifications and these special provisions.

Holding tanks for pretreatment storage shall be transportable and totally enclosed, with a minimum holding capacity sufficient to prevent delay of other work and capable of connecting multiple tanks in series. Holding tanks shall have an inlet and outlet capable of receiving and discharging minimum flows, at a rate sufficient to reach the treatment goals. Holding tanks shall be able to accommodate temporary installation of submersible pumps. All tanks shall remain within the project limits until dewatering operations are no longer necessary as determined by the Engineer.

CONTRACT NO. 04-0120R4

CONTRACT CHANGE ORDER NO 75

SHEET 53 OF 136

Granulated activated carbon (GAC) shall be used as the medium to treat groundwater contaminated with petroleum hydrocarbons as noted in the contaminant summary table. The GAC treatment system shall be designed to meet the treatment goals specified in the SF-PUC Batch Discharge Permit and Authorization Letter. The GAC treatment vessels shall be readily removed and replaced or interchanged when required. The GAC treatment system shall have appropriate fittings for pipe connections designed to accommodate the required flow rate. Throughout the operation, the Contractor shall have additional GAC treatment vessels available for transport and use at the site if the monitoring results indicate that the GAC treatment vessels currently in use will not continue to meet the treatment goals of the SF-PUC Batch Discharge Permit and Authorization Letter. Pretreatment of the groundwater to prevent sediment build up within the GAC treatment vessels shall be provided when necessary.

Sampling ports shall be spigots attached to the piping system and capable of obtaining a representative sample of water at locations within the effluent treatment facility where constituent concentrations are needed to ensure compliance with the SF-PUC Batch Discharge Permit and Authorization Letter and to inspect the efficiency of the facility. The effluent treatment facility shall be capable of sustaining temporary fluctuations in water pressure due to monitoring activities.

Pumps shall be capable of being submerged in water and discharging water and other materials including, but not limited to small rocks, gravel, sand and sediments. The submersible pumps shall be capable, at all times, of discharging at a flow rate that will match the flow rate through the GAC vessels. An additional submersible pump shall be provided by the Contractor that is capable of discharging treated effluent from a temporary holding container to the dedicated discharge location.

The Contractor shall be responsible for providing and installing all piping required to circulate the effluent through the treatment facility and all piping required to convey the treated effluent from the temporary holding container to the point of release at the dedicated discharge location.

A holding tank shall be provided between the GAC treatment system outlet and the discharge location with a minimum storage capacity of 1800 L. The holding container shall have an inlet and outlet capable of receiving and discharging minimum flows that can match the flow rate through the GAC vessels. The holding container shall be open to the air and sealed on all sides and the bottom to prevent any leakage.

Sediments removed during maintenance of the treatment facility shall be characterized by laboratory analysis before disposal. Contaminated sediments shall be removed from the site to an appropriately licensed waste management facility in accordance with Section 7-1.13, "Disposal of Material Outside the Highway Right of Way," of the Standard Specifications. Disposal of contaminated sediments, as determined by analysis, will be paid for as extra work as provided in Section 4-1.03D of the Standard Specifications.

INSPECTION

The Contractor shall conduct a daily inspection of the dewatering equipment, when in use, and ensure that all components are functional and routinely maintained to prevent leakage before removal of suspended solids and petroleum hydrocarbons. If any component of the dewatering equipment is damaged so that the performance of the equipment is diminished below allowable operational levels, the dewatering operation shall be discontinued and the component shall be repaired or replaced with substitute equipment.

CONTRACT NO. 04-0120R4

CONTRACT CHANGE ORDER NO 75

SHEET 54 OF 136

SPILL CONTINGENCY

The Contractor shall prepare and submit to the Engineer a contingency plan for the management of spills or leaks of any materials or wastes that may impact the water quality of the San Francisco Bay.

The spill contingency plan shall be incorporated within the SWPPP, as specified in "Water Pollution Control (Storm Water Pollution Prevention Plan)" of these special provisions.

The contingency plan shall include instructions and procedures for reporting spills, and a list of spill containment and collection materials and equipment to be maintained onsite. The contingency plan shall be reviewed and updated quarterly.

LIQUIDS, RESIDUES AND DEBRIS

The Contractor shall prevent the discharge of slurries, liquids, residues, or debris produced during the work to storm water facilities or surface waters of the State. The SWPPP shall, at a minimum, depict and describe the procedural and structural methods of containing, collecting, and disposing of all slurries, liquids, residues, and debris associated with the operations. Sufficient redundancy shall be incorporated into the procedural and structural methods such that the slurries, liquids, residues, and debris are not conveyed into or become present in drainage systems, San Francisco Bay, or other water bodies.

PAYMENT

The contract lump sum price paid for non-storm water discharges shall include full compensation for furnishing all labor, materials, tools, equipment, and incidentals and for doing all the work involved in non-storm water discharges, complete in place, as shown on the plans, as specified in the Standard Specifications, and these special provisions, and as directed by the Engineer.

10-1.04 TEMPORARY DRAINAGE INLET PROTECTION

Temporary drainage inlet protection shall be constructed, maintained, and removed from all drainage inlets exposed to construction activity and at the locations shown on the approved Storm Water Pollution Prevention Plan (SWPPP) in accordance with "Water Pollution Control" of these special provisions, and in accordance with the details shown on the plans and these special provisions.

Temporary drainage inlet protection shall be one of the water pollution control practices for sediment control. The amendment to the SWPPP shall include the use of temporary drainage inlet protection.

The Contractor shall select the appropriate drainage inlet protection in accordance with the details to meet the conditions around the drainage inlet. Throughout the duration of the contract, the Contractor shall provide protection to meet the changing conditions around the drainage inlet.

Temporary drainage inlet protection shall be Type 1,3A,3B,4A,4B or 5.

CONTRACT NO. 04-0120R4

CONTRACT CHANGE ORDER NO 75

SHEET 55 OF 136

MATERIALS

Erosion Control Blanket

The erosion control blanket shall be a rolled erosion control product (RECP) and shall be classified either as temporary and degradable or long-term and nondegradable, and shall conform to one of the following:

A. Temporary and degradable:

1. Machine produced mats consisting of curled wood excelsior with 80 percent of the fiber 150 mm or longer. The excelsior blanket shall be of consistent thickness with wood fiber evenly distributed over the entire area of the blanket. The top surface of the blanket shall be covered with an extruded photodegradable plastic netting or lightweight nonsynthetic netting. The blanket shall be smolder resistant without the use of chemical additives and shall be nontoxic and noninjurious to plant and animal life. The excelsior blanket shall be furnished in rolled strips with a minimum mass per unit area of 0.40-kg/m^2.
2. Machine produced mats consisting of 70 percent straw and 30 percent coconut fiber with an extruded photodegradable plastic netting or lightweight nonsynthetic netting on the top and bottom surfaces of the blanket. The straw and coconut shall adhere to the netting using thread or glue strip. The straw and coconut blanket shall be of consistent thickness, and straw and coconut fiber shall be evenly distributed over the entire area of the blanket. The straw and coconut fiber blanket shall be furnished in rolled strips with a minimum mass per unit area of 0.27-kg/m^2.
3. Machine produced mats that are 100 percent coir consisting of coconut fiber with an extruded photodegradable plastic netting or lightweight nonsynthetic netting on the top and bottom surfaces of the blanket. The coconut fiber shall adhere to the netting using thread or glue strip. The coconut blanket shall be of consistent thickness, with coconut fiber evenly distributed over the entire area of the blanket. The coconut fiber blanket shall be furnished in rolled strips with a minimum mass per unit area of 0.27-kg/m^2.
4. Machine woven netting that is 100 percent spun coir consisting of coconut fiber with an average open area of 63 percent to 70 percent. Coconut coir netting shall be furnished in rolled strips with a minimum mass per unit area of 0.40-kg/m^2.

B. Long-term and nondegradable:

1. Geotextile blanket shall conform to the provisions for rock slope protection fabric (Type A) in Section 88-1.04, "Rock Slope Protection Fabric," of the Standard Specifications.

Staples

Staples shall be as shown on the plans. An alternative attachment device such as geotextile pins or plastic pegs may be used instead of staples. The Contractor shall submit a sample of the alternative attachment device for the Engineer's approval before installation.

CONTRACT NO. 04-0120R4

CONTRACT CHANGE ORDER NO 75

SHEET 56 OF 136

Rocks

Rocks shall conform to the requirements in Section 72-2.02, "Materials," of the Standard Specifications except that grading shall conform to the following sizes:

Square Screen Size (mm)	Percentage Passing	Percentage Retained
150	100	0
75	0	100

Fiber Roll

A fiber roll shall be one of the following:

A. Constructed with a premanufactured blanket made of one material or a combination of materials consisting of wood excelsior, rice or wheat straw, or coconut fibers. The blanket shall be between 2.0 m and 2.4 m in width and between 20 m and 29 m in length. Wood excelsior shall be individual fibers, of which 80 percent shall be 150 mm or longer in length. The blanket shall have a photodegradable plastic netting or biodegradable jute, sisal, or coir fiber netting on at least one side. The blanket shall be rolled along the width and secured with jute twine spaced 2 m apart along the full length of the roll and placed 150 mm from the ends of each roll. The finished roll shall be between 200 mm and 250 mm in diameter, between 3 m and 6 m in length, and shall weigh at least 0.81-kg/m. More than one blanket may be required to achieve the finished roll diameter. When more than one blanket is required, blankets shall be jointed longitudinally with an overlap of 150 mm along the length of the blanket.

B. A premanufactured roll of rice or wheat straw, wood excelsior, or coconut fiber encapsulated within a photodegradable plastic or biodegradable jute, sisal, or coir fiber netting. The rolls shall be between 200 mm and 250 mm in diameter, between 3 m and 6 m in length, and shall weigh at least 1.6 kg/m. The netting shall have a minimum durability of one year after installation. The netting shall be secured tightly at each end of the roll.

Wood Stakes

Wood stakes shall be a minimum of 19 mm x 19 mm x 450 mm in size for Type 1 installation, or shall be a minimum of 19 mm x 38 mm x 450 mm in size for Type 2 installation. Wood stakes shall be untreated fir, redwood, cedar, or pine and cut from sound timber. They shall be straight and free of loose or unsound knots and other defects which would render them unfit for the purpose intended.

Rope

Rope shall be biodegradable, such as sisal or manila, with a minimum diameter of 6.35 mm.

Gravel-filled Bags

Gravel-filled bag fabric shall be nonwoven polypropylene geotextile or polymer material and shall conform to the following requirements:

CONTRACT NO. 04-0120R4

CONTRACT CHANGE ORDER NO 75

SHEET 57 OF 136

Specification	Requirements
Mass per unit area, grams per square meter, minimum. ASTM Designation: D 5261	270
Grab tensile strength (25-mm grip), kilonewtons, minimum. ASTM Designation: D4632*	0.89
Ultraviolet stability, percent tensile strength retained after 500 hours, ASTM Designation: D4355, xenon arc lamp method	70

* or appropriate test method for specific polymer

Gravel-filled bags shall be between 600 mm and 800 mm in length, and between 400 mm and 500 mm in width.

Yarn used for binding gravel bags shall be as recommended by the manufacturer or bag supplier and shall be of a contrasting color.

Gravel shall be between 10 mm and 20 mm in diameter, and shall be clean and free from clay balls, organic matter, and other deleterious materials. The opening of gravel-filled bags shall be secured to prevent gravel from escaping. Gravel-filled bags shall be between 13 kg and 22 kg in mass.

Silt Fence

At the Contractor's option, temporary silt fence shall be prefabricated or constructed with silt fence fabric, posts, and fasteners.

Silt fence fabric shall conform to the following requirements:

Specification	Requirements
Width, mm, min.	900
Grab tensile strength (25-mm grip), kilonewtons, minimum. in each direction ASTM Designation: D 4632 or appropriate test method for specific polymer	0.55
Elongation, percent minimum in each direction ASTM Designation: D 4632 or appropriate test method for specific polymer	15
Permittivity, 1/sec., minimum. ASTM Designation: D 4491	1.5
Flow rate, liters per minute per square meter, minimum. ASTM Designation: D 4491	400
Ultraviolet stability, percent tensile strength retained after 500 hours, minimum. ASTM Designation: D 4355 (xenon-arc lamp and water spray weathering method)	70

Silt fence fabric shall be geotextile manufactured from woven polypropylene or polymer material. Silt fence fabric may be made of recycled materials. No materials shall contain biodegradable filler materials that can degrade the physical or chemical characteristics of the finished fabric. The Engineer may order tests to confirm the absence of biodegradable filler materials in conformance to the requirements in ASTM Designation: E 204.

Posts for temporary silt fences shall be one of the following:

A. Posts shall be untreated fir, redwood, cedar, or pine, shall be cut from sound timber, and shall be straight and free of loose or unsound knots and other defects which would render them unfit for the purpose intended. Wood post shall be a minimum of 34 mm x 40 mm in size, and 4 feet in length. The end of the post to be embedded in the soil shall be pointed.

CONTRACT NO. 04-0120R4

CONTRACT CHANGE ORDER NO 75

SHEET 58 OF 136

B. Posts shall be steel and have a "U," "T," "L," or other cross sectional shape that can resist failure from lateral loads. The steel posts shall have a minimum mass per length of 1.1 kg/m and a minimum length of 1.2 m. One end of the steel posts shall be pointed and the other end shall be capped with an orange or red plastic safety cap which fits snugly to the steel post. The Contractor shall submit to the Engineer for approval a sample of the capped steel post before installation.

Fasteners for attaching silt fence fabric to posts shall be as follows:

A. When prefabricated silt fence is used, posts shall be inserted into sewn pockets.
B. Silt fence fabric shall be attached to wooden posts with nails or staples as shown on the plans or as recommended by the manufacturer or supplier. Tie wire or locking plastic fasteners shall be used to fasten the silt fence fabric to steel posts. Maximum spacing of fasteners shall be 200 mm along the length of the steel post.

Foam Barriers

The foam barrier fabric cover and skirt shall be a woven polypropylene fabric with a minimum tensile strength of 0.44-kN, conforming to ASTM Designation: D 4632. The prefabricated fabric shall be high visibility orange in color that is integral to the fabric; painting shall not be allowed. The fabric shall have an ultraviolet stability exceeding 70 percent.

The foam core shall be urethane foam and shall be shaped and dimensioned as shown on the plans.

Adhesive for foam barriers shall be a solvent-free rubber modified asphalt emulsion. The color of the emulsion shall be brown when wet and shall have a drying period of not more than 3 hours.

Anchoring nails or spikes for foam barriers shall be a minimum of 25 mm in length and capable of penetrating concrete or asphalt surfaces.

Sediment Filter Bag

Sediment filter bag fabric shall be geotextile manufactured from woven polypropylene or polymer material. Sediment filter bag fabric may be made from recycled polymer materials. Polymer materials shall not contain biodegradable filler materials and shall conform to the requirements in ASTM Designation: E 204.

Sediment filter bag fabric shall conform to the following requirements:

Specification	Requirements
Grab tensile strength (25-mm grip), kilonewtons, minimum. in each direction ASTM Designation: D 4632 or appropriate test method for specific polymer	1.35
Elongation, percent minimum in each direction ASTM Designation: D 4632 or appropriate test method for specific polymer	15
Permittivity, 1/sec., minimum. ASTM Designation: D 4491	1.5
Flow rate, liters per minute per square meter, minimum. ASTM Designation: D 4491	8140
Ultraviolet stability, percent tensile strength retained after 500 hours, minimum. ASTM Designation: D 4355 (xenon-arc lamp and water spray weathering method)	80

CONTRACT NO. 04-0120R4

CONTRACT CHANGE ORDER NO 75

SHEET 59 OF 136

The sediment filter bag shall be sized to fit the catch basin or drainage inlet and shall be complete with lifting loops and dump straps attached at the bottom to facilitate emptying of the sediment filter bag. The sediment filter bags shall have a restraint cord approximately halfway up the bag to keep the sides away from the catch basin walls.

INSTALLATION

Temporary drainage inlet protection shall be installed at drainage inlets in paved and unpaved areas as follows:

A. Temporary drainage inlet protection shall be installed such that ponded runoff does not encroach on the traveled way or overtop the curb or dike. Gravel-filled bags shall be placed to control ponding and prevent runoff from overtopping the curb or dike.
B. The bedding area for the temporary drainage inlet protection shall be cleared of obstructions including rocks, clods, and debris greater than 25 mm in diameter before installation.
C. A temporary linear sediment barrier shall be installed up-slope of the existing drainage inlet and parallel with the curb, dike, or flow line to prevent sediment from entering the drainage inlet.

Erosion Control Blanket and Geotextile Fabric

The erosion control blanket and geotextile fabric shall be secured to the surface of the excavated sediment trap with staples and embedded in a trench adjacent to the drainage inlet. The perimeter edge of the erosion control blanket and geotextile fabric shall be anchored in a trench.

Silt Fence

Silt fence shall be installed along the perimeter of the erosion control blanket or geotextile fabric, with the posts facing the drainage inlet. The trench shall be backfilled and tamped to secure the silt fence fabric in the bottom of the trench.

Gravel-filled Bags

Gravel-filled bags shall be stacked to form a gravel bag barrier. The gravel-filled bags shall be placed so that the bags are tightly abutted and overlap the joints in adjacent rows. A spillway shall be created by removing one or more gravel-filled bags from the upper layer of the gravel bag barrier.

Gravel-filled bags shall only be use within shoulder areas when placed behind temporary railing (Type K).

Fiber Rolls

Fiber rolls shall be placed over the erosion control blanket or geotextile fabric with the ends of the fiber roll abutted tightly together. Fiber rolls shall be secured with stakes installed along the length of the fiber rolls. Stakes shall not be installed within 300 mm of the end of the rolls.

CONTRACT NO. 04-0120R4

CONTRACT CHANGE ORDER NO 75

SHEET 60 OF 136

Foam Barriers

Foam barriers shall be installed in individual sections adjacent to existing drainage inlets. Foam barriers shall be securely attached to the pavement according to the angle and spacing shown on the plans. Foam barriers shall be installed flush against the sides of concrete or asphalt concrete curbs, dikes, and pavement with the inner material and fabric cover cut smoothly and evenly to provide a tight flush joint.

Sediment Filter Bags

Sediment filter bags shall be installed by removing the drainage inlet grate, placing the sediment bag in the opening, and replacing the grate to secure the sediment filter bag in place.

MAINTENANCE

Temporary drainage inlet protection shall be maintained to provide sediment holding capacity and to reduce runoff velocities. Temporary drainage inlet protection shall be repaired or replaced immediately after the damage occurs.

Sediment deposits, trash, and debris shall be removed from temporary drainage inlet protection as needed or when directed by the Engineer. Removed sediment shall be deposited within the project limits so that the sediment is not subject to erosion by wind or by water. Trash and debris shall be removed and disposed of in accordance with the provisions in Section 7-1.13, "Disposal of Material Outside the Highway Right of Way," of the Standard Specifications.

At locations where rills and other evidence of concentrated runoff have occurred beneath the drainage inlet protection, the protection shall be adjusted to prevent another occurrence.

Temporary silt fence shall be repaired or replaced when silt fence fabric becomes split, torn, or unraveled. Sagging or slumping silt fence shall be repaired with additional stakes or replaced. Broken or split stakes shall be replaced. Temporary silt fence shall be maintained to provide a sediment holding capacity of approximately 1/3 the height of the silt fence fabric above ground.

Sediment in excess of 50 mm above the surface of the erosion control blanket or geotextile fabric shall be removed.

Sediment deposits shall be removed when the deposit is 1/3 the height of the gravel bag barrier or one half the height of the spillway; whichever is less.

Gravel-filled bags shall be replaced when the bag material ruptures or when the binding fails.

Split, torn, unraveling, sagging, or slumping fiber rolls shall be replaced or repaired.

Foam barriers shall be repaired or replaced when the geotextile fabric cover becomes split, torn, or unraveled. Foam barriers that become detached or dislodged shall be reattached to the pavement. Sediment deposits shall be removed when the deposit reaches 1/3 of the foam barrier height.

Sediment filter bags shall be emptied when the restraint cords are no longer visible. Sediment filter bags shall be emptied by placing 25 mm steel reinforcing bars through the lifting loops. The bag shall be emptied of its contents and rinsed before replacement in the drainage inlet.

REMOVAL

When the temporary drainage inlet protection is no longer required the protection materials shall be removed and disposed of in accordance with the provisions in Section 7-1.13, "Disposal of Material Outside the Highway Right of Way," of the Standard Specifications.

CONTRACT NO. 04-0120R4

CONTRACT CHANGE ORDER NO 75

SHEET 61 OF 136

Holes, depressions, or other ground disturbance caused by the removal of the temporary drainage inlet protection shall be backfilled and repaired in accordance with the provisions in Section 15-1.02, "Preservation of Property," of the Standard Specifications.

MEASUREMENT

Quantities of temporary drainage inlet protection will be determined from actual count in place. The protection will be measured one time only and no additional measurement will be recognized.

PAYMENT

The contract unit price paid for temporary drainage inlet protection shall include full compensation for furnishing all labor, materials, tools, equipment, and incidentals, and for doing all the work involved in constructing the temporary drainage inlet protection, complete in place, including maintenance, removal of materials, including cleanup and disposal of retained sediment and debris, and backfilling and repairing holes, depressions and other ground disturbance, as shown on the plans, as specified in the Standard Specifications and these special provisions, and as directed by the Engineer.

No additional compensation will be made if the temporary drainage inlet protection changes during the course of construction.

10-1.05 TEMPORARY COVER

Temporary cover shall be furnished, installed, maintained, and later removed at the locations shown on the approved Storm Water Pollution Prevention Plan in conformance with "Water Pollution Control" of these special provisions, and in conformance with details shown on the plans and these special provisions.

Temporary cover shall be one of the water pollution control practices for soil stabilization. The Storm Water Pollution Prevention Plan shall include the use of temporary cover.

MATERIALS

Temporary Cover Fabric

Temporary cover fabric shall be either a geotextile (engineering fabric) or a geomembrane (plastic sheeting) conforming to the following requirements:

A. Geotextile shall be a woven, slit film fabric which is also known as woven tape. The fabric shall be nonbiodegradable, resistant to deterioration by sunlight, and inert to most soil chemicals. Edges of the film fabric shall be selvage or serge to prevent unraveling. The film fabric shall also conform to the following requirements:

CONTRACT NO. 04-0120R4

CONTRACT CHANGE ORDER NO 75

SHEET 62 OF 136

Specification	Requirements
Grab tensile strength (25-mm grip), kilonewtons, min. ASTM Designation: D4632*	0.89
Elongation at break, percent min. ASTM Designation: D4632*	15
Toughness, kilonewtons, min. (percent elongation x grab tensile strength)	13.3
Permittivity, 1/sec, max. (liters per minute per square meter) ASTM Designation: D 4491	0.08 (244)
Ultraviolet light stability, percent tensile strength retained after 500 hours, min. ASTM Designation: D 4355 (xenon arc lamp method)	70

* or appropriate test method for specific polymer

B. The geomembrane shall consist of 0.25-mm thick, single-ply material in conformance with the requirements in ASTM Designation: D 5199.

Temporary cover fabric shall be manufactured from polyethylene, polypropylene, or comparable polymers. The polymer materials may be virgin, recycled, or a combination of virgin and recycled materials. The polymer materials shall not contain biodegradable filler materials that can degrade the physical or chemical characteristics of the finished fabric. The Engineer may order tests to confirm the absence of biodegradable filler materials in conformance with the requirements in ASTM Designation: E 204 (Fourier Transformed Infrared Spectroscopy-FTIR).

Restrainers

Restrainers for securing the temporary cover fabric on slopes and stockpiles shall consist of one or a combination of the following:

A. Gravel-filled bags used as restrainers shall be knotted, roped, and placed at a maximum of 2 m apart on the temporary cover fabric as shown on the plans. Gravel-filled bags shall be between 13 kg and 22 kg in mass, between 600 mm and 800 mm in length, and between 400 mm and 500 mm in width. Gravel bag fabric shall be nonwoven polypropylene geotextile with a minimum unit weight of 270 g/m^2. The fabric shall have a minimum grab tensile strength (25-mm grip) of 0.89-kN in conformance with the requirements in ASTM Designation: D 4632, and an ultraviolet (UV) stability of 70 percent tensile strength retained after 500 hours in conformance with the requirements in ASTM Designation: D 4355, xenon arc lamp method. Gravel shall consist of noncohesive material between 10 mm and 20 mm in diameter, free of clay balls, organic matter, and other deleterious material. The openings of gravel-filled bags shall be secured to prevent escape of gravel.
B. Restrainers consisting of a steel anchor with a wooden lath shall be fabricated and placed as shown on the plans. Wooden lath shall conform to the provisions in Section 20-2.12, "Lumber," of the Standard Specifications and shall be fir or pine, 38 mm x 89 mm in size, and 2.4 m in length. The wooden lath shall be secured to the temporary cover with steel anchors placed 1.2 m apart along the lath.

CONTRACT NO. 04-0120R4

CONTRACT CHANGE ORDER NO 75

SHEET 63 OF 136

The Contractor may use an alternative restrainer if approved by the Engineer in writing. The Contractor shall submit details for an alternative restrainer to the Engineer prior to installation. The alternative restrainer shall be installed and maintained in conformance with these special provisions.

INSTALLATION

Temporary cover shall be installed as follows:

A. Temporary cover fabric shall be placed and anchored as shown on the plans.
B. Abutting edges of the temporary cover fabric shall overlap a minimum of 600 mm. Nonabutting edges shall be embedded in the soil a minimum of 150 mm.
C. Restrainers shall be placed at the overlap area and along the toe of the slope. Restrainers outside the overlap areas shall be placed at a maximum spacing of 2.4 m.
D. Steel anchors shall be installed to allow the leg of the steel anchor to pierce through the temporary cover fabric into the slope with the crown section securing the wooden lath firmly against the slope.
E. Earthen berm, a linear sediment barrier, shall be constructed adjacent to the toe of the slope with a minimum height of 200 mm and a minimum width of 940 mm. The earthen berm shall be hand or mechanically compacted. Alternative linear sediment barrier may be used at the Contractor's expense if approved by the Engineer in writing.

If the Contractor removes the temporary cover in order to facilitate other work, the temporary cover shall be replaced and secured at the Contractor's expense.

When no longer required as determined by the Engineer, temporary cover shall become the property of the Contractor and be removed and disposed of in conformance with the provisions in Section 7-1.13, "Disposal of Material Outside the Highway Right of Way," of the Standard Specifications.

Ground disturbances, including holes and depressions, caused by the installation and removal of the temporary cover shall be backfilled and repaired in conformance with the provisions in Section 15-1.02, "Preservation of Property," of the Standard Specifications.

MAINTENANCE

The Contractor shall maintain the temporary cover throughout the contract to prevent displacement or migration of the material on the slope or stockpiled.

Temporary cover shall be maintained to minimize exposure of the protected area. Restrainers shall be relocated and secured as needed to restrain the temporary cover fabric in place. Temporary cover that breaks free shall be immediately secured. Holes, tears, and voids in the temporary cover fabric shall be patched, repaired, or replaced. When patches or repairs are unacceptable as determined by the Engineer, the temporary cover shall be replaced.

Temporary cover shall be repaired or replaced on the same day when the damage occurs. Damage to the temporary cover resulting from the Contractor's vehicles, equipment, or operations shall be repaired at the Contractor's expense.

MEASUREMENT AND PAYMENT

The quantity of temporary cover to be paid for will be measured by the square meter for the actual area covered.

CONTRACT NO. 04-0120R4

CONTRACT CHANGE ORDER NO 75

SHEET 64 OF 136

The contract price paid per square meter for temporary cover shall include full compensation for furnishing all labor, materials, tools, equipment, and incidentals, and for doing all the work involved in installing temporary cover, complete in place, including trench excavation and backfill, maintenance, and removal of temporary cover, as shown on the plans, as specified in the Standard Specifications and these special provisions, and as directed by the Engineer.

10-1.06 TEMPORARY CONCRETE WASHOUT FACILITY

Temporary concrete washout facilities shall be constructed, maintained, and later removed at the locations shown on the approved Storm Water Pollution Prevention Plan in conformance with "Water Pollution Control" of these special provisions, and in conformance with details shown on the plans and these special provisions.

Temporary concrete washout facilities shall be one of the water pollution control practices for waste management and materials pollution control. The Storm Water Pollution Prevention Plan shall include the use of temporary concrete washout facilities.

MATERIALS

Plastic Liner

Plastic liners shall be single ply, new polyethylene sheeting, a minimum of 0.25-mm thick and shall be free of holes, punctures, tears or other defects that compromise the impermeability of the material. Plastic liners shall not have seams or overlapping joints.

Gravel-filled Bags

Gravel bag fabric shall be nonwoven polypropylene geotextile (or comparable polymer) and shall conform to the following requirements:

Specification	Requirements
Mass per unit area, grams per square meter, min. ASTM Designation: D 5261	270
Grab tensile strength (25-mm grip), kilonewtons, min. ASTM Designation: D4632*	0.89
Ultraviolet stability, percent tensile strength retained after 500 hours, ASTM Designation: D4355, xenon arc lamp method	70

* or appropriate test method for specific polymer

Gravel bags shall be between 600 mm and 800 mm in length, and between 400 mm and 500 mm in width.

Yarn used for binding gravel bags shall be as recommended by the manufacturer or bag supplier and shall be of a contrasting color.

Gravel shall be between 10 mm and 20 mm in diameter, and shall be clean and free from clay balls, organic matter, and other deleterious materials.

The opening of gravel-filled bags shall be secured to prevent gravel from escaping. Gravel-filled bags shall be between 13 kg and 22 kg in mass.

Straw Bales

Straw for straw bales shall conform to the provisions in Section 20-2.06, "Straw," of the Standard Specifications.

CONTRACT NO. 04-0120R4

CONTRACT CHANGE ORDER NO 75

SHEET 65 OF 136

Straw bales shall be a minimum of 360 mm in width, 450 mm in height, 900 mm in length and shall have a minimum mass of 23 kg. The straw bale shall be composed entirely of vegetative matter, except for binding material.

Straw bales shall be bound by either wire, nylon or polypropylene string. Jute or cotton binding shall not be used. Baling wire shall be a minimum 1.57 mm in diameter. Nylon or polypropylene string shall be approximately 2 mm in diameter with 360 N of breaking strength.

Stakes

Stakes shall be wood or metal. Wood stakes shall be untreated fir, redwood, cedar, or pine and cut from sound timber. They shall be straight and free of loose or unsound knots or other defects which would render them unfit for the purpose intended. Wood stakes shall be a minimum 50 mm x 50 mm in size. Metal stakes may be used as an alternative, and shall be a minimum 13 mm in diameter. Stakes shall be a minimum 1.2 m in length. The tops of the metal stakes shall be bent at a 90-degree angle or capped with an orange or red plastic safety cap that fits snugly to the metal stake. The Contractor shall submit a sample of the metal stake and plastic cap, if used, for the Engineer's approval prior to installation.

Staples

Staples shall be as shown on the plans. An alternative attachment device such as geotextile pins or plastic pegs may be used instead of staples. The Contractor shall submit a sample of the alternative attachment device for the Engineer's approval prior to installation.

Signs

Wood posts for signs shall conform to the provisions in Section 56-2.02B, "Wood Posts," of the Standard Specifications. Lag screws shall conform to the provisions in Section 56-2.02D, "Sign Panel Fastening Hardware," of the Standard Specifications.

Plywood shall be freshly painted for each installation with not less than 2 applications of flat white paint. Sign letters shown on the plans shall be stenciled with commercial quality exterior black paint. Testing of paint will not be required.

INSTALLATION

Temporary concrete washout facilities shall be as follows:

A. Temporary concrete washout facilities shall be installed prior to beginning placement of concrete and located a minimum of 15 m from storm drain inlets, open drainage facilities, and water courses unless determined infeasible by the Engineer. Temporary concrete washout facilities shall be located away from construction traffic or access areas at a location determined by the Contractor and approved by the Engineer.
B. A sign shall be installed adjacent to each washout facility at a location determined by the Contractor and approved by the Engineer. Signs shall be installed in conformance with the provisions in Section 56-2.03, "Construction," and Section 56-2.04, "Sign Panel Installation," of the Standard Specifications.
C. The length and width of a temporary concrete washout facility may be increased from the minimum dimensions shown on the plans, at the Contractor's expense and upon approval of the Engineer.

CONTRACT NO. 04-0120R4

CONTRACT CHANGE ORDER NO 75

SHEET 66 OF 136

D. Temporary concrete washout facilities shall be constructed in sufficient quantity and size to contain liquid and concrete waste generated by washout operations for concrete wastes. These facilities shall be constructed to contain liquid and concrete waste without seepage, spills, or overflow.
E. Berms for below grade temporary concrete washout facilities shall be constructed from compacted native material. Gravel may be used in conjunction with compacted native material.
F. A plastic liner shall be installed in below grade temporary concrete washout facilities.

Details for an alternative temporary concrete washout facility shall be submitted to the Engineer for approval at least 7 days prior to installation.

When temporary concrete washout facilities are no longer required for the work, as determined by the Engineer, the hardened concrete and liquid residue shall be removed and disposed of in conformance with the provisions in Section 15-3.02, "Removal Methods," of the Standard Specifications. Temporary concrete washout facilities shall be disposed of in conformance with the provisions in Section 7-1.13, "Disposal of Material Outside the Highway Right of Way," of the Standard Specifications.

Ground disturbance, including holes and depressions, caused by the installation and removal of the temporary concrete washout facilities shall be backfilled and repaired in conformance with the provisions in Section 15-1.02, "Preservation of Property," of the Standard Specifications.

MAINTENANCE

Temporary concrete washout facilities shall be maintained to provide adequate holding capacity with a minimum freeboard of 300 mm. Maintaining temporary concrete washout facilities shall include removing and disposing of hardened concrete and returning the facilities to a functional condition. Hardened concrete materials shall be removed and disposed of in conformance with the provisions in Section 15-3.02, "Removal Methods," of the Standard Specifications. Holes, rips, and voids in the plastic liner shall be patched and repaired by taping or the plastic liner shall be replaced. The plastic liner shall be replaced when patches or repairs compromise the impermeability of the material as determined by the Engineer.

Gravel bags shall be replaced when the bag material is ruptured or when the yarn has failed, allowing the bag contents to spill out.

Temporary concrete washout facilities shall be repaired or replaced on the same day the damage occurs. Damage to temporary concrete washout facilities resulting from the Contractor's vehicles, equipment, or operations shall be repaired at the Contractor's expense.

MEASUREMENT AND PAYMENT

Quantities of temporary concrete washout facilities will be measured as units determined from actual count in place.

The contract unit price paid for temporary concrete washout facility shall include full compensation for furnishing all labor, materials, tools, equipment and incidentals, and for doing all the work involved in constructing a temporary concrete washout facility, complete in place, including excavation and backfill, maintenance, and removal, as shown on the plans, as specified in the Standard Specifications and these special provisions, and as directed by the Engineer.

CONTRACT NO. 04-0120R4
CONTRACT CHANGE ORDER NO 75
SHEET 67 OF 136

10-1.07 TEMPORARY SILT FENCE

Temporary silt fence shall be furnished, installed, maintained, and later removed at the locations shown on the approved Storm Water Pollution Prevention Plan in conformance with "Water Pollution Control" of these special provisions, and in conformance with details shown on the plans and these special provisions.

Temporary silt fence shall be one of the water pollution control practices for sediment control. The Storm Water Pollution Prevention Plan shall include the use of temporary silt fence.

MATERIALS

At the Contractor's option, temporary silt fence shall be prefabricated or constructed with silt fence fabric, posts, and fasteners.

Silt Fence Fabric

Silt fence fabric shall be geotextile manufactured from woven polypropylene or polymer material. Silt fence fabric may be virgin, recycled, or a combination of virgin and recycled polymer materials. No virgin or recycled polymer materials shall contain biodegradable filler materials that can degrade the physical or chemical characteristics of the finished fabric. The Engineer may order tests to confirm the absence of biodegradable filler materials in conformance to the requirements in ASTM Designation: E 204 (Fourier Transformed Infrared Spectroscopy-FTIR).

Silt fence fabric shall conform to the following requirements:

Specification	Requirements
Width, mm, min.	900
Grab tensile strength (25-mm grip), kilonewtons, min. in each direction ASTM Designation: D 4632*	0.55
Elongation, percent minimum in each direction ASTM Designation: D 4632*	15
Permittivity, 1/sec., min. ASTM Designation: D 4491	0.05
Flow rate, liters per minute per square meter, min. ASTM Designation: D 4491	400
Ultraviolet stability, percent tensile strength retained after 500 hours, min. ASTM Designation: D 4355 (xenon-arc lamp and water spray weathering method)	70

* or appropriate test method for specific polymer

Posts

Posts for temporary silt fence shall be one of the following:

A. Untreated fir or pine, a minimum of 34 mm x 40 mm in size, and 1.2 m in length. One end of the post shall be pointed.

B. Steel and have a "U," "T," "L," or other cross sectional shape that can resist failure from lateral loads. The steel posts shall have a minimum mass per length of 1.1 kg/m and a minimum length of 1.2 m. One end of the steel posts shall be pointed and the other end shall be capped with an orange or red plastic safety cap which fits snugly to the steel post. The Contractor shall submit to the Engineer for approval a sample of the capped steel post prior to installation.

CONTRACT NO. 04-0120R4

CONTRACT CHANGE ORDER NO 75

SHEET 68 OF 136

Fasteners

Fasteners for attaching silt fence fabric to posts shall be as follows:

A. When prefabricated silt fence is used, posts shall be inserted into sewn pockets.
B. Silt fence fabric shall be attached to wooden posts with nails or staples as shown on the plans or as recommended by the manufacturer or supplier. Tie wire or locking plastic fasteners shall be used to fasten the silt fence fabric to steel posts. Maximum spacing of fasteners shall be 200 mm along the length of the steel post.

INSTALLATION

Temporary silt fence shall be installed parallel with the slope contour in reaches not to exceed 150 m. A reach is considered a continuous run of temporary silt fence from end to end or from an end to an opening, including joined panels. Each reach shall be constructed so that the elevation at the base of the fence does not deviate from the contour more than 1/3 of the fence height.

The silt fence fabric shall be installed on the side of the posts facing the slope. The silt fence fabric shall be anchored in a trench as shown on the plans. The trench shall be backfilled and mechanically or hand tamped to secure the silt fence fabric in the bottom of the trench.

Mechanically pushing 300 mm of the silt fence fabric vertically through the soil may be allowed if the Contractor can demonstrate to the Engineer that the silt fence fabric will not be damaged and will not slip out of the soil resulting in sediment passing under the silt fence fabric.

At the option of the Contractor, the maximum post spacing may increase to 3 m if the fence is reinforced by a wire or plastic material by prefabrication or by field installation. The field-assembled reinforced temporary silt fence shall be able to retain saturated sediment without collapsing.

Temporary silt fence shall be joined as shown on the plans. The tops of the posts shall be tied together by minimum of 2 wraps of tie wire of a minimum 1.5 mm diameter. The silt fence fabric shall be attached to the posts at the joint as specified in these special provisions.

When no longer required as determined by the Engineer, temporary silt fence shall be removed and disposed of in conformance with the provisions in Section 7-1.13, "Disposal of Material Outside the Highway Right of Way," of the Standard Specifications. Trimming the silt fence fabric and leaving it in place will not be allowed.

Ground disturbance, including holes and depressions, caused by the installation and removal of the temporary silt fence shall be backfilled and repaired in conformance with the provisions in Section 15-1.02, "Preservation of Property," of the Standard Specifications.

MAINTENANCE

Temporary silt fence shall be maintained to provide a sediment holding capacity of approximately 1/3 the height of the silt fence fabric above ground. When sediment exceeds this height or when directed by the Engineer, sediment shall be removed. The removed sediment shall be deposited within the project limits so that the sediment is not subject to erosion by wind or by water.

Temporary silt fence shall be repaired or replaced the same day the damage occurs. Damage to the temporary silt fence resulting from the Contractor's vehicles, equipment, or operations shall be repaired at the Contractor's expense.

CONTRACT NO. 04-0120R4

CONTRACT CHANGE ORDER NO 75

SHEET 69 OF 136

MEASUREMENT AND PAYMENT

Quantities of temporary silt fence to be paid for will be determined by the meter, measured parallel with the ground slope along the line of the installed temporary silt fence, deducting the widths of openings.

The contract price paid per meter for temporary silt fence shall include full compensation for furnishing all labor, materials, tools, equipment, and incidentals, and for doing all the work involved in installing temporary silt fence, complete in place, including trench excavation and backfill, maintenance, and removal, as shown on the plans, as specified in the Standard Specifications and these special provisions, and as directed by the Engineer.

10-1.08 TEMPORARY CONSTRUCTION ENTRANCE

Temporary construction entrances shall be constructed, maintained, and later removed at the locations shown on the approved Storm Water Pollution Prevention Plan in conformance with "Water Pollution Control" of these special provisions, and in conformance with details shown on the plans and these special provisions.

Temporary construction entrances shall be one of the water pollution control practices for tracking control. The Storm Water Pollution Prevention Plan shall include the use of temporary construction entrances.

At the option of the Contractor, temporary construction entrances shall be Type 1 or Type 2.

MATERIALS

Temporary Entrance Fabric

Temporary entrance fabric shall be manufactured from polyester, nylon, or polypropylene material, or any combination thereof. Temporary entrance fabric shall be a nonwoven, needle-punched fabric, free of needles which may have broken off during the manufacturing process. Temporary entrance fabric shall be permeable and shall not act as a wicking agent.

Temporary entrance fabric shall be manufactured from virgin, recycled, or a combination of virgin and recycled polymer materials. No virgin or recycled materials shall contain biodegradable filler materials that can degrade the physical or chemical characteristics of the finished fabric. The Engineer may order tests to confirm the absence of biodegradable filler materials in conformance to the requirements in ASTM Designation: E 204 (Fourier Transformed Infrared Spectroscopy-FTIR).

Temporary entrance fabric shall conform to the following requirements:

Specification	Requirements
Mass per unit area, grams per square meter, min. ASTM Designation: D 5261	235
Grab tensile strength (25-mm grip), kilonewtons, min. ASTM Designation: D4632*	0.89
Elongation at break, percent min. ASTM Designation: D4632*	50
Toughness, kilonewtons, min. (percent elongation x grab tensile strength)	53

* or appropriate test method for specific polymer

CONTRACT NO. 04-0120R4

CONTRACT CHANGE ORDER NO 75

SHEET 70 OF 136

Rocks

Rocks shall conform to the material quality requirements in Section 72-2.02, "Materials," of the Standard Specifications for shape and for apparent specific gravity, absorption, and durability index. Rocks used for the temporary entrance shall conform to the following sizes:

Square Screen Size (mm)	Percentage Passing	Percentage Retained
150	100	0
75	0	100

Corrugated Steel Panels

Corrugated steel panels shall be prefabricated and shall be pressed or shop welded, with a slot or hooked section to facilitate coupling at the ends of the panels.

INSTALLATION

Temporary construction entrances shall be installed as follows:

A. Prior to placing the temporary entrance fabric, the areas shall be cleared of all trash and debris. Vegetation shall be removed to the ground level. Trash, debris, and removed vegetation shall be disposed of in conformance with the provisions in Section 7-1.13, "Disposal of Material Outside the Highway Right of Way," of the Standard Specifications.
B. A sump shall be constructed within 6 m of each temporary construction entrance as shown on the plans.
C. Before placing the temporary entrance fabric, the ground shall be graded to a uniform plane. The relative compaction of the top 0.5-m shall be not less than 90 percent. The ground surface shall be free of sharp objects that may damage the temporary entrance fabric, and shall be graded to drain to the sump as shown on the plans.
D. Temporary entrance fabric shall be positioned longitudinally along the alignment of the entrance, as directed by the Engineer.
E. The adjacent ends of the fabric shall be overlapped a minimum length of 300 mm.
F. Rocks to be placed directly over the fabric shall be spread in the direction of traffic, longitudinally and along the alignment of the temporary construction entrance.
G. During spreading of the rocks, vehicles or equipment shall not be driven directly on the fabric. A layer of rocks a minimum 150 mm thick shall be placed between the fabric and the spreading equipment to prevent damage to the fabric.
H. For Type 2 temporary construction entrances, a minimum of 6 coupled panel sections shall be installed for each temporary construction entrance. Prior to installing the panels, the ground surface shall be cleared of all debris to ensure uniform contact with the ground surface.

Fabric damaged during rock placement shall be repaired by placing a new piece of fabric over the damaged area. The piece of fabric shall be large enough to cover the damaged area and provide a minimum 450-mm overlap on all edges.

CONTRACT NO. 04-0120R4

CONTRACT CHANGE ORDER NO 136

SHEET 71 OF 136

Details for a proposed alternative temporary construction entrance or alternative sump shall be submitted to the Engineer for approval at least 7 days prior to installation. The Contractor may eliminate the sump if approved in writing by the Engineer.

If buildup of soil and sediment deter the function of the temporary construction entrance, the Contractor shall immediately remove and dispose of the soil and sediment, and install additional corrugated steel panels and spread additional rocks to increase the capacity of the temporary construction entrance at the Contractor's expense.

When no longer required as determined by the Engineer, temporary construction entrances shall be removed and disposed of in conformance with the provisions in Section 7-1.13, "Disposal of Material Outside the Highway Right of Way," of the Standard Specifications.

Ground disturbance, including holes and depressions, caused by the installation and removal of the temporary construction entrance, including the sumps, shall be backfilled and repaired in conformance with the provisions in Section 15-1.02, "Preservation of Property," of the Standard Specifications.

While the temporary construction entrance is in use, pavement shall be cleaned and sediment removed at least once a day, and as often as necessary when directed by the Engineer. Soil and sediment or other extraneous material tracked onto existing pavement shall not be allowed to enter drainage facilities.

MAINTENANCE

The Contractor shall maintain temporary construction entrances throughout the contract or until removed. The Contractor shall prevent displacement or migration of the rock surfacing or corrugated steel panels. Significant depressions resulting from settlement or heavy equipment shall be repaired by the Contractor, as directed by the Engineer.

Temporary construction entrances shall be maintained to minimize tracking of soil and sediment onto existing public roads.

Temporary construction entrances shall be repaired or replaced on the same day the damage occurs. Damage to the temporary construction entrance resulting from the Contractor's vehicles, equipment, or operations shall be repaired at the Contractor's expense.

MEASUREMENT AND PAYMENT

Quantities of temporary construction entrances will be determined from actual count in place.

The contract unit price paid for temporary construction entrance shall include full compensation for furnishing all labor, materials, tools, equipment, and incidentals, and for doing all the work involved in constructing temporary construction entrance, complete in place, including excavation and backfill, maintenance, and removal, as shown on the plans, as specified in the Standard Specifications and these special provisions, and as directed by the Engineer.

The cost of maintaining the temporary construction entrance will be borne equally by the State and the Contractor. The division of cost will be made be determining the cost of maintaining temporary construction entrance in conformance with the provisions in Section 9-1.03, "Force Account Payment," of the Standard Specifications and paying to the Contractor one-half of that cost.

Cleanup, repair, removal, disposal, or replacement due to improper installation or the Contractor's negligence will not be considered as included in the cost for performing maintenance.

CONTRACT NO. 64-0120R4

CONTRACT CHANGE ORDER NO 75

SHEET 72 OF 136

10-1.09 OBSTRUCTIONS

Attention is directed to Section 8-1.10, "Utility and Non-Highway Facilities," and Section 15, "Existing Highway Facilities," and Section 51-1.19, "Utility Facilities," of the Standard Specifications and these special provisions.

Attention is directed to the existence of certain underground facilities that may require special precautions be taken by the Contractor to protect the health, safety and welfare of workers and of the public. Facilities requiring special precautions include, but are not limited to: conductors of petroleum products, oxygen, chlorine, and toxic or flammable gases; natural gas in pipelines greater than 150 mm in diameter or pipelines operating at pressures greater than 415 kPa (gage); underground electric supply system conductors or cables, with potential to ground of more than 300 V, either directly buried or in a duct or conduit which do not have concentric grounded or other effectively grounded metal shields or sheaths.

The Contractor shall notify the Engineer and the appropriate regional notification center for operators of subsurface installations at least 2 working days, but not more than 14 calendar days, prior to performing any excavation or other work close to any underground pipeline, conduit, duct, wire or other structure. Regional notification centers include, but are not limited to, the following:

Notification Center	Telephone Number
Underground Service Alert-Northern California (USA)	1-800-642-2444 1-800-227-2600
Underground Service Alert-Southern California (USA)	1-800-422-4133 1-800-227-2600

The following utility facilities will be relocated during the progress of the contract. The Contractor shall notify the Engineer, in writing, prior to doing work in the vicinity of the facility. The utility facility will be relocated within the listed working days, as defined in Section 8-1.06, "Time of Completion," of the Standard Specifications, after the notification is received by the Engineer:

Utility	Location	Working Days
TV Cable (Comcast)	East of Bent W6	15

The Contractor shall notify the Engineer and Comcast at (415) 503-4505, at least 48 hours before excavation and piling work is begun.

Installation of the water mains will require coordination with the Contractor's operations. The Contractor shall make the necessary arrangements with the San Francisco Public Utilities Commission/Water Department (SFWD), through the Engineer, and shall submit a schedule of work, verified by a representative of the utility company, to the Engineer. The schedule of work shall provide not less than the following number of working days, as defined in Section 8-1.06, "Time of Completion," of the Standard Specifications for the utility company to complete their work:

CONTRACT NO. 04-0120R4

CONTRACT CHANGE ORDER NO 75

SHEET 73 OF 136

Utility (address)	Work Performed by the SFWD	Working Days
Water Main	Making a connection to an existing main	5
	Chlorination test including laboratory results	5
	Service change over services larger than 50-mm (per each service)	5
	Service change over services less than 50 mm (for up to 6 services)	1
	Excavation Safety Plans review	15

The Contractor shall notify in writing the Engineer and SFWD, at least 15 working days in advance before any work to be performed by SFWD forces for disconnecting, and connecting of the water main, and disinfection. Furthermore, the Contractor shall confirm the scheduled work with the Engineer, and SFWD at (415)550-4956, at least 3 working days before the actual field work by SFWD.

The existing ground seismographic station, and sanitary sewer lift pump station, including pump station, underground vault and sanitary main system, will remain in service for the duration of this contract. The Contractor shall notify the Engineer and City and County of San Francisco Public Utilities Commission at (415) 648-6882 x 1290, and the Berkeley Seismology Specialist at (510) 486-7314 or 882-9816, at least 10 working days before excavation and piling work is begun. The Contractor shall field verify the location of the cable and ensure that the monitoring cable shall not damaged.

The existing electrical concrete duct bank (2.4 kV, 4.1 kV, and 12 kV) shown on the plans, will remain in service for the duration of this contract. The Contractor shall notify the Engineer and City and County of San Francisco Public Utilities Commission at (415) 648-6882 x 1290, at least 10 working days before excavation and piling work is begun. The electrical line shall be physically located in the presence of the authorized representative from the City and County of San Francisco Public Utilities Commission. The Contractor shall not perform any excavation of piling close to the electrical line without the utility owner.

Full compensation for protecting the existing ground seismographic station and monitoring cable, and sanitary sewer lift pump station, including pump station, underground vault and sanitary main system, and electrical concrete duct bank (2.4 kV, 4.1 kV, and 12 kV) shall be considered as included in the contract prices paid for various items of work and no separate payment will be made therefor.

In the event that the utility facilities mentioned above are not removed or relocated by the date specified and, if in the opinion of the Engineer, the Contractor's operations are delayed or interfered with by reason of the utility facilities not being removed or relocated by the date specified, the State will compensate the Contractor for the delays to the extent provided in Section 8-1.09, "Right of Way Delays," of the Standard Specifications, and not otherwise, except as provided in Section 8-1.10, "Utility and Non-Highway Facilities," of the Standard Specifications.

10-1.10 DUST CONTROL

Dust control shall conform to the provisions in Section 10, "Dust Control," of the Standard Specifications .

CONTRACT NO. 04-0120R4

CONTRACT CHANGE ORDER NO 75

SHEET 74 OF 136

10-1.11 MAINTAINING TRAFFIC

Attention is directed to Sections 7-1.08, "Public Convenience," 7-1.09, "Public Safety," and 12, "Construction Area Traffic Control Devices," of the Standard Specifications and to the provisions in "Public Safety" of these special provisions and these special provisions. Nothing in these special provisions shall be construed as relieving the Contractor from the responsibilities specified in Section 7-1.09.

Personal vehicles of the Contractor's employees shall not be parked on the traveled way or shoulders including any section closed to public traffic, except in the area proposed by the Contractor and approved by the Engineer .

The Contractor shall notify United States of Coast Guard Officer, at (415) 399-3504 of the Contractor's intent to begin work at least 5 working days before work is begun. The Contractor shall cooperate with United States of Coast Guard relative to handling traffic on Macalla Rd. and USCG Rd., through the area and shall make arrangements relative to keeping the working area clear of parked vehicles.

At all times during construction, the Contractor shall provide access to and maintain Macalla Rd.and USCG Rd., which are the primary access to United States Coast Guard (USCG), United States Navy facilities, University of California-Berkeley (UCB) Seismographic Stations, and other project sites on Yerba Buena Island, in the vicinity of the contract.

Full compensation for providing and maintaining the above access shall be considered as included in the contract price paid for various items of work involved and no additional compensation will be allowed therefor.

Attention is directed to "Bridge Tolls" of these special specifications. The access of the contractor's trucks hauling materials to the project site, from westbound Route 80 and westbound bus lanes, located along north side of San Francisco-Oakland Bay Bridge toll plaza, shall not be allowed, during the peak periods from 5:00 a.m. to 10:00 a.m., and 3:00 p.m. to 7:00 p.m., on weekdays.

Designated legal holidays are: January 1st, the third Monday in February, the last Monday in May, July 4th, the first Monday in September, November 11th, Thanksgiving Day, and December 25th. When a designated legal holiday falls on a Sunday, the following Monday shall be a designated legal holiday. When November 11th falls on a Saturday, the preceding Friday shall be a designated legal holiday.

Minor deviations from the requirements of this section concerning hours of work which do not significantly change the cost of the work may be permitted upon the written request of the Contractor if, in the opinion of the Engineer, public traffic will be better served and the work expedited. These deviations shall not be adopted by the Contractor until the Engineer has approved the deviations in writing. Other modifications will be made by contract change order.

10-1.12 EXISTING HIGHWAY FACILITIES

The work performed in connection with various existing highway facilities shall conform to the provisions in Section 15, "Existing Highway Facilities," of the Standard Specifications and these special provisions.

REMOVE ABADON UTILITY AND NON-HIGHWAY FACILITIES

Attention is directed to Section 8-1.10, "Utility and Non-Highway Facilities," and Section 15, "Existing Highway Facilities," and Section 51-1.19, "Utility Facilities," of the Standard Specifications and these special provisions, and "Obstructions," of the special provisions.

CONTRACT NO. 04-0120R4

CONTRACT CHANGE ORDER NO 75

SHEET 75 OF 136

Existing abandon utilities and non-highway facilities to be removed as shown on the plans within the limits of structure excavation for the bridge footings, and electrical duct bank as shown on the plan, shall be removed and disposed of, except for the removal and relocation of the fire hydrants.

Full compensation for removing abandon utilities and non-highway facilities within the limits of structure excavation for the bridge footings, and electrical duct bank , shall be considered as included in the contract price paid for the items involved and no additional compensation will be allowed therefor.

Removed existing abandon utilities and non-highway facilities shall be disposed of outside the highway right of way in conformance with the provisions in Section 7-1.13, "Disposal of Material Outside the Highway Right of Way," of the Standard Specifications.

BRIDGE REMOVAL (PORTION)

Removing bridges or portions of bridges shall conform to the provisions in Section 15-4, "Bridge Removal," of the Standard Specifications and these special provisions.

This work includes removing portion of the existing retaining wall in the vicinity of Bent W7L (South) footing as shown on the plans.

Removed materials that are not to be salvaged or used in the reconstruction shall become the property of the Contractor and shall be disposed of in conformance with the provisions in Section 7-1.13, "Disposal of Material Outside the Highway Right of Way," of the Standard Specifications.

Full compensation for patching cut rebar with epoxy grout shall be considered as included in the contract lump sum price paid for bridge removal (portion), and no additional compensation will be allowed therefor.

10-1.13 CLEARING AND GRUBBING

Clearing and grubbing shall conform to the provisions in Section 16, "Clearing and Grubbing," of the Standard Specifications and these special provisions.

Attention is directed to "Hazardous Material Excavation" of "Earthwork," of these specifications.

Clearing and grubbing operations shall result in no visible dust.

Vegetation shall be cleared and grubbed only within the excavation and embankment slope line.

At locations adjacent to a bridge or other structure, clearing and grubbing of vegetation shall be limited to 1.5 m outside the physical limits of the bridge or structure except as specified herein except as specified herein.

Trees, bushes, and shrubs at locations where there is no temporary or permanent grading adjacent to or beneath the temporary bypass structure shall be protected in place from injury or damage resulting from the construction activities. Trees, bushes, and shrubs protected in-place beneath the temporary bypass structure shall be topped or pruned to a level that is 3000 mm, plus or minus 1000 mm, below the lowest elevation of the bridge at the point of the pruning.

Pruning and topping shall be performed under the continuous field supervision of an arborist with current certification by the International Society of Arboriculture (ISA) or as directed by the Engineer. In cases where the arborist concludes that topping or pruning may result in permanent damage to vegetation, the Contractor shall be instructed to clear the vegetation.

CONTRACT NO. 04-0120R4

CONTRACT CHANGE ORDER NO 75

SHEET 76 OF 136

Existing vegetation outside the areas to be cleared and grubbed shall be protected from injury or damage resulting from the Contractor's operations. Existing vegetation and trees within the limits of the Environmentally Sensitive Areas (ESA) shall be protected throughout the duration of the Contract.

Activities controlled by the Contractor, except cleanup or other required work, shall be confined within the graded areas of the roadway.

Nothing herein shall be construed as relieving the Contractor of the Contractor's responsibility for final cleanup of the highway as provided in Section 4-1.02, "Final Cleaning Up," of the Standard Specifications.

The area of clearing and grubbing shown on the plans includes all areas of clearing and grubbing, pruning, and topping. Full compensation for pruning and topping, and providing an arborist shall be considered as included in the contract lump sum price paid for clearing and grubbing and no additional compensation will be allowed therefor.

10-1.14 EARTHWORK

Earthwork shall conform to the provisions in Section 19, "Earthwork," of the Standard Specifications and these special provisions.

Attention is directed to "Hazardous Material Excavation," of these special provisions.

Attention is directedto Sections 5-1.02A, "Trench Excavation Safety Plans," and 7-1.09, "Public Safety," to ensure the safety and health of workers and the public, during the construction of Bent W7, and excavation for the soil nail wall.

Surplus excavated material shall become the property of the Contractor and shall be disposed of in conformance with the provisions in Section 7-1.13, "Disposal of Material Outside the Highway Right of Way," of the Standard Specifications.

Reinforcement or metal attached to reinforced concrete rubble placed in embankments shall not protrude above the grading plane. Prior to placement within 0.6-m below the grading plane of embankments, reinforcement or metal shall be trimmed to no greater than 20 mm from the face of reinforced concrete rubble. Full compensation for trimming reinforcement or metal shall be considered as included in the contract prices paid per cubic meter for the types of excavation shown in the Engineer's estimate, or the contract prices paid for furnishing and placing imported borrow or embankment material, as the case may be, and no additional compensation will be allowed therefor.

HAZARDOUS MATERIAL EXCAVATION

Hazardous material excavation shall consist of excavating hazardous material identified on the plans as being within excavation limits shown on the plans, specified in the Standard Specifications, or specified or directed by the Engineer and stockpiling and disposing of the material as specified in this section.

Excavated hazardous material shall be managed as follows:

A. Hazardous material – Haul and dispose of the material at a permitted hazardous waste management facility in conformance with Section 2521 of Title 23 of the California Code of Regulations, Section 7-1.13, "Disposal of Material Outside the Highway Right of Way," of the Standard Specifications, and these special provisions.

CONTRACT NO. 04-0120R4

CONTRACT CHANGE ORDER NO 75

SHEET 77 OF 136

Hazardous materials shall be transferred directly from the excavation to a registered transport vehicle, a storage container approved for transport of hazardous waste by the United States Department of Transportation, or a stockpile location approved by the Engineer. Stockpile locations for hazardous material shall be maintained as follows:

A. The material shall not contain free liquids that separate readily from the material. The presence or absence of free liquids shall be demonstrated by United States Environmental Protection Agency Method 9095 as modified by Section 66264.314 of Title 22 of the California Code of Regulations.
B. The material shall be stored on undamaged 1.5-mm high-density polyethylene or an equivalent impermeable barrier unless the stockpiling location is on a paved surface. If the location is on a paved surface the thickness of the barrier can be reduced to 0.5-mm high-density polyethylene or its equivalent. The dimensions of the barrier shall exceed the dimensions of the stockpile at all times. Any seams in the barrier shall be sealed to prevent leakage.
C. At the end of each day or prior to a storm event the material shall be covered with undamaged 0.3-mm polyethylene or an equivalent impermeable barrier to prevent windblown dispersion and precipitation run-off and run-on. When more than one sheet is required to cover the material, the sheets shall be overlapped a minimum of 0.45-m in a manner that prevents water from flowing onto the material. The cover shall be secured in a manner that keeps it in place at all times. Driven anchors shall not be used except at the perimeter of the stockpile. The cover shall be inspected and maintained in conformance with the provisions in "Water Pollution Control" of these special provisions.

These stockpiling requirements apply to temporary storage outside of an excavation or a transport container including, but not limited to, staging of excavated material next to the excavation prior to pick up by loading equipment, accumulating material for full transport loads, and awaiting test results required by a disposal facility. The removal of hazardous material stockpiles shall begin within 90 days of accumulating 100 kg of hazardous material. After final removal has occurred the Contractor shall be responsible for any cleanup deemed necessary by the Engineer.

Hazardous material material on exteriors of transport vehicles shall be removed and placed either into the current transport vehicle or the excavation prior to the vehicle leaving the loading area. No hazardous material shall be deposited on public roads. The Contractor shall indemnify the State from any costs due to spillage during the transport of the hazardous material to the disposal facility.

Attention is directed to "Hazardous Material, General" of these special provisions.

SAMPLING AND ANALYSIS

The Contractor shall test the material to be excavated for any additional acceptance requirements of the disposal facility. Sampling and analysis shall be performed using the sampling and analysis procedure approved by the Engineer and the disposal facility.

The Contractor may perform additional tests on the material to be excavated for confirmation of the classification as hazardous material. Sampling and analysis shall be based on guidelines in USEPA, SW 846, "Test Methods for Evaluating Solid Waste, Volume II: Field Manual

CONTRACT NO. 04-0120R4

CONTRACT CHANGE ORDER NO 75

SHEET 78 OF 136

Physical/Chemical Methods." Changes in classification of materials will be handled in accordance with Section 4-1.03, "Changes," of the Standard Specifications.

The Contractor shall submit, for approval by the Engineer, a Sampling and Analysis Plan that describes the scope of the investigation, along with the name, address, and certification number of the testing laboratory, 15 working days prior to beginning any sampling or analysis for additional disposal facility requirements, reclassification of material, characterization of material outside of the excavation pay limits or the horizontal limits of the classification zones shown on the plans. The Sampling and Analysis Plan shall be prepared under the guidance of a registered professional experienced in site characterization. The Engineer will make the final decision on reclassification or characterization of material after review of the test data. Six working days shall be allowed for review of test data.

Sampling and analysis of material excavated from outside the horizontal limits of the material classification zones shown on the plans will be paid for as extra work as provided in Section 4-1.03D of the Standard Specifications

Operations shall be conducted in a manner that prevents increases in the quantities of hazardous material resulting from mixing with material containing lower contaminant concentrations. No additional compensation will be made for material requiring reclassification due to failure to segregate the material after excavation.

Hazardous material will be measured in conformance with the Standard Specifications and these special provisions for the type of excavation involved.

The contract price paid per cubic meter for structure excavation (Type H) shall include full compensation for furnishing all labor, materials, tools, equipment, and incidentals and for doing all the work involved in excavating, stockpiling, loading, sampling and analyzing, hauling, and disposing of hazardous material, complete in place, as shown on the plans, as specified in the Standard Specifications and these special provisions, and as directed by the Engineer.

Full compensation for all excavation work involving loading, stockpiling, transporting, and disposing of hazardous material, which is not otherwise designated by type or class, and is not otherwise paid for under separate contract items, shall be considered as included in the contract prices paid for the items of work involved and no additional compensation will be allowed therefor.

SOLDIER PILE WALL EARTHWORK

General

The Contractor shall submit to the Engineer working drawings, and a construction sequence for the proposed method of soldier pile wall construction for the site in conformance with the provisions in "Working Drawings," of these special provisions. The drawings shall be signed by an engineer who is registered as a Civil Engineer in the State of California. One set of the drawings and construction sequence shall be furnished to the Engineer. The working drawings and construction sequence shall include, but not be limited to, defining order of work, traffic control, method of installation of soldier piles, method of placing lagging, limits of structure excavation lifts, and type of drilling and excavation equipment to be used. The Contractor shall allow one week after complete drawings and support data are submitted for the review and approval of the proposed method of soldier pile wall construction.

In the event the Engineer fails to complete the review and approval within the time allowed, and if, in the opinion of the Engineer, completion of the work is delayed or interfered with by reason of the Engineer's delay in completing the review, the Contractor will be compensated for

CONTRACT NO. 04-0120R4

CONTRACT CHANGE ORDER NO 75

SHEET 79 OF 136

any resulting loss, and an extension of time will be granted, in the same manner as provided in Section 8-1.09, "Right of Way Delays," of the Standard Specifications.

Structure Excavation (Soldier Pile Wall)

Excavation and construction of the soldier pile wall shall proceed in lifts from the top down.

Care shall be taken in performing structure excavation (soldier pile wall) for placement of lagging such that a minimal void behind the lagging is required to be backfilled.

At the end of the work shift, lagging shall be in place the full height of the exposed excavation face.

Structure Backfill (Soldier Pile Wall)

Material for structure backfill behind lagging shall conform to the provisions in Section 19-3, "Structure Excavation and Backfill," of the Standard Specifications. Structure backfill behind lagging shall be compacted by hand tamping, mechanical compaction, or other means approved by the Engineer.

Structure backfill in fill areas behind the lagging shall be keyed into the existing or excavated back slope.

Concrete Backfill

Concrete backfill encasing the steel soldier piles below the lagging shall be Class 3 concrete conforming to the provisions in Section 90, "Portland Cement Concrete," of the Standard Specifications and these special provisions.

Full compensation for structure excavation (soldier pile wall) and structure backfill (soldier pile wall), and concrete backfill Class 3 encasing the steel soldier piles below the lagging shall be considered as included in the contract price paid per meter for furnish and install soldier piles and no additional compensation will be allowed therefore.

Full compensation for working drawings and construction sequence, and temporary supports and shoring, if required, for soldier pile wall construction shall be considered as included in the contract price paid per meter for furnish and install soldier piles (HP360X108) and no additional compensation will be allowed therefor.

10-1.15 SOLDIER PILE WALL

This work shall consist of furnishing and constructing soldier pile wall (left in place) for the construction of Bent W7R at location as shown on the plans. The soldier pile wall shall conform to the provisions in "Earthwork," "Drilled Holes," "Piling," "Portland Cement Concrete," and "Timber Lagging," of these special provisions.

10-1.16 SOIL NAIL WALL EARTHWORK

Soil nail wall earthwork, consisting of excavating for soil nail wall construction and backfilling around completed soil nail walls, shall conform to the provisions in Section 19-3, "Structure Excavation and Backfill," of the Standard Specifications and these special provisions.

Working Drawings

The Contractor shall submit a complete working drawing submittal for earthwork for each soil nail wall to the Engineer in conformance with the provisions in "Working Drawings," of

CONTRACT NO. 04-0120R4

CONTRACT CHANGE ORDER NO 75

SHEET 80 OF 136

these special provisions. Working drawings for soil nail wall earthwork shall be 559 mm by 864 mm in size. For initial review, 5 sets of drawings shall be submitted. After review, between 6 and 12 sets, as requested by the Engineer, shall be submitted for final approval and use during construction.

Working drawings for wall earthwork shall show the State assigned designations for the contract number, structure number, full name of the structure as shown on the contract plans, and District-County-Route-Kilometer Post on each drawing and calculation sheet. The Contractor's name, address, and telephone number shall be shown on the working drawings. Each sheet shall be numbered in the lower right hand corner.

The working drawings for soil nail wall earthwork shall contain all information required for the construction and quality control of the earthwork, including the following:

A. A proposed schedule and detailed construction sequence. Construction sequence shall include measures to ensure wall and slope stability during all stages of wall construction including provisions for discontinuous rows of soil nails.
B. Methods of excavation to the staged lifts indicated and types of excavation equipment.
C. Temporary shoring plans.
D. Drilling methods and equipment including proposed drill hole size and any variation of these along the alignments.
E. Information on space requirements for installation equipment.
F. A detailed construction dewatering plan addressing all elements necessary to divert, control, and dispose of surface water and ground water.

A supplement to the working drawings shall include the following:

A. Independently checked calculations for wall and slope stability during all stages of wall construction including geotechnical assessment of information provided by the Department for this contract. At the Contractor's option, the Contractor may conduct additional geotechnical investigation for the purpose of developing soil nail wall earthwork working drawings.
B. Information on provisions for working in the proximity of underground facilities.

The working drawings and supplement shall be stamped and signed by an engineer who is registered as a Civil Engineer in the State of California.

The Contractor shall allow the Engineer 4 weeks to review the working drawings and supplement after a complete submittal has been received.

Should the Engineer fail to review the complete working drawing submittal within the time specified and if, in the opinion of the Engineer, the Contractor's controlling operation is delayed or interfered with by reason of the delay in reviewing the soil nail wall earthwork working drawing submittal, an extension of time commensurate with the delay in completion of the work thus caused will be granted in conformance with the provisions in Section 8-1.09, "Right of Way Delays," of the Standard Specifications.

Excavation

Care shall be taken during excavation for soil nail walls to prevent disturbing the natural foundation materials behind the face of excavation. During initial mass grading, the Contractor

CONTRACT NO. 04-0120R4
CONTRACT CHANGE ORDER NO 75
SHEET 81 OF 136

shall not excavate the full wall height to the wall alignment as shown on the plans, but the Contractor shall maintain a working berm of native material in front of the wall to serve as a work bench for the drill equipment. The working berm shall extend out from the wall a minimum distance of 6 m and shall be cut down from that point at the slope shown on the approved wall earthwork working drawings. The original ground beyond the wall alignment for the back or ends of the wall as shown on the plans shall not be over excavated. Any such over excavation shall be restored by the Contractor, at the Contractor's expense, using methods and materials approved in writing by the Engineer. Soil stabilization methods or temporary backing or lagging placed behind the excavation face may be required to prevent disturbing the natural foundation materials.

Excavation for walls shall be limited to that area which can be nailed and covered with shotcrete during the same work shift in which the excavation is done. Subsequent excavation shall not be made within 3 m of previously nailed and covered portions of the wall until those nailed and covered portions are structurally complete. A portion of the wall will be considered structurally complete when the soil nail assemblies have been installed, the shotcrete cover has set, specified testing has been completed for that portion of the wall, and the test results have been furnished to the Engineer.

Excavation to the final wall alignment for the full wall height shall incorporate a working berm which shall be constructed from the top down in a staged lift sequence as shown on the approved wall earthwork working drawings.

At the option of the Contractor, in addition to the working berm described above, the Contractor may maintain a stabilizing berm of undisturbed material to support the excavation face during soil nail installation. The stabilizing berm shall extend horizontally from the bottom of the shotcrete a minimum distance of 0.3-m and shall be cut down from that point at a slope as shown on the approved wall earthwork working drawings.

After soil nails are complete in place for a given lift, the stabilizing berm shall be removed during excavation to the final wall alignment. The complete excavated face shall be cleaned of all loose materials, mud, rebound, and other materials that could prevent or reduce shotcrete bond to the excavated face and soil nails.

Temporary backing or lagging for excavation at soil nail walls may be left in place if approved in writing by the Engineer. There shall be no voids behind temporary backing or lagging that is left in place. Fillers used to eliminate voids between the excavation face and temporary backing or lagging shall be dimensionally stable, non-deteriorating material capable of supporting the earth pressures in both water saturated and dry conditions.

Timber backing or lagging at walls which is to remain in place and is greater than 25 mm total thickness shall be pressure treated with wood preservative for soil and fresh water use in conformance with the provisions in Section 58, "Preservative Treatment of Lumber, Timber and Piling," of the Standard Specifications. Wood preservative shall be one of the following: creosote, creosote-coal tar solution, pentachlorophenol, copper naphthenate, ammonia copper arsenate, ammoniacal copper zinc arsenate, acid copper chromate, or chromated copper arsenate.

The Contractor shall remove all cobbles, boulders or portions of boulders, rubble, or debris which are encountered at the final wall alignment during wall face excavation and which protrude from the excavated face more than 50 mm into the design shotcrete thickness as shown on the plans. Such over excavation shall be backfilled with shotcrete.

The Contractor shall immediately notify the Engineer of the occurrence of raveling or local instability of the final wall face excavation due to the presence of groundwater, soil conditions, equipment vibration, or other causes.

CONTRACT NO. 04-0120R4

CONTRACT CHANGE ORDER NO 75

SHEET 82 OF 136

Unstable areas shall be temporarily stabilized by means of buttressing the exposed excavation face with an earth berm or other methods approved in writing by the Engineer. Construction of the wall in unstable areas shall be suspended until remedial measures, submitted by the Contractor, and approved by the Engineer, have been taken.

The Contractor shall protect installed soil nails during excavation and subsequent operations. Any soil nails damaged during construction shall be replaced by the Contractor, at the Contractor's expense.

PAYMENT

Full compensation for excavation for soil nail wall shall be considered as included in the contract price paid per cubic meter for structure excavation (bridge) and no separate payment will be made therefor.

Full compensation for working drawings and supplements, and for furnishing, constructing and removing shoring, working berms, and stabilizing berms, if required, for soil nail wall construction shall be considered as included in the contract price paid per cubic meter for structure excavation (soil nail wall) and no additional compensation will be allowed therefor.

Full compensation for shotcrete used to fill voids created by the removal of cobbles and boulders or other obstructions shall be considered as included in the contract price paid per cubic meter for shotcrete and no additional compensation will be allowed therefor.

10-1.17 SOIL NAIL ASSEMBLY

Soil nail assemblies and test soil nail assemblies, consisting of drilling holes in natural foundation materials, installing and grouting steel bars in drilled holes, anchorage systems, and testing of test soil nail assemblies, shall conform to the details shown on the plans, the provisions of the Standard Specifications, and these special provisions.

Attention is directed to "Soil Nail Wall Earthwork" of these special provisions.

WORKING DRAWINGS

The Contractor shall submit a complete working drawing submittal for soil nail assemblies to the Officeof Structure Design (OSD) in conformance with the provisions in "Working Drawings," of these special provisions. All working drawings for soil nail assemblies shall be 559 mm by 864 mm in size. For initial review, 5 sets of drawings shall be submitted. After review, between 6 and 12 sets, as requested by the Engineer, shall be submitted to OSDfor final approval and use during construction.

Working drawing submittals for soil nail assemblies shall show the State assigned designations for the contract number, structure number, full name of the structure as shown on the contract plans, and District-County-Route-Kilometer post on each drawing and calculation sheet. The Contractor's name, address, and phone and FAX numbers shall also be shown on the working drawings. Each working drawing sheet shall be numbered in the lower right hand corner of the sheet.

The working drawing submittal for soil nail assemblies shall contain all information required for the construction and quality control of the soil nail wall, including the following:

A. The proposed schedule and detailed construction sequence of the installation and grouting of soil nails, application of shotcrete, and construction of cast-in-place reinforced concrete.

CONTRACT NO. 04-0120R4

CONTRACT CHANGE ORDER NO 75

SHEET 83 OF 136

B. Complete details and specifications of the soil nail and test soil nail, including encapsulation materials and method of grouting the encapsulation, anchorage system, and type of packers or other appropriate devices to be used to ensure partial length grouting of test soil nails.
C. Grout mix designs and procedures involved in testing grout.
D. Grout placement procedures and equipment including minimum required cure time.
E. Details of the equipment proposed for testing soil nails, including jacking frame and appurtenant bracing, and the method and equipment for determining any displacement of the test soil nail relative to the grout during application of test loads.
F. Information on space requirements for installation equipment.
G. Drilling methods and equipment.

The working drawing submittal shall be stamped and signed by an engineer who is registered as a Civil Engineer in the State of California.

The Contractor shall allow the Engineer 4 weeks to review the soil nail working drawings after a complete submittal has been received. No soil nails shall be fabricated or installed until the Engineer has approved, in writing, the working drawing submittal for soil nail assemblies.

Should the Engineer fail to review the complete working drawing submittal within the time specified, and if, in the opinion of the Engineer, the Contractor's controlling operation is delayed or interfered with by reason of the delay in reviewing the soil nail working drawing submittal, an extension of time commensurate with the delay in completion of the work thus caused will be granted in conformance with the provisions in Section 8-1.09, "Right of Way Delays," of the Standard Specifications.

MATERIALS

The materials specified below shall be used for construction of soil nail assemblies and test soil nail assemblies.

Soil Nail

Soil nails shall conform to the provisions for bar reinforcement in Section 52, "Reinforcement," of the Standard Specifications. Grade 520 soil nails shall also conform to the requirements in ASTM Designation: A 615/A 615M. . Soil nail assemblies shall be lengthened or additional soil nail assemblies shall be installed when ordered by the Engineer. The lengthening or addition of soil nail assemblies, when ordered by the Engineer, will be paid for as extra work as provided in Section 4-1.03D, "Extra Work," of the Standard Specifications.

Soil nails shall have a minimum length of 150 mm of thread on the anchorage end. Threading may be continuous spiral deformed ribbing provided by the bar deformations or may be cut into a reinforcing bar. If threads are cut into a reinforcing bar, the bar size shall be the next larger bar designation number from that shown on the plans and coarse threads shall be used.

Corrugated plastic sheathing shall be either polyvinyl chloride (PVC) or high density polyethylene (HDPE). The minimum sheathing wall thickness shall be 1.0 mm.

HDPE shall have a density between 0.940 and 0.960-g/cm^3 when measured in conformance with the requirements in ASTM Designation: D 792, A-2.

The sheathing shall have sufficient strength to prevent damage during construction operations and shall be watertight, chemically stable without embrittlement or softening, and

CONTRACT NO. 04-0120R4

CONTRACT CHANGE ORDER NO 75

SHEET 84 OF 136

nonreactive with concrete.

Splicing of soil nails shall be made only at the locations shown on the plans or at ends of soil nails which the Engineer has ordered to be lengthened.

Test Soil Nail

Test soil nails shall conform to the provisions for bar reinforcement in Section 52, "Reinforcement," of the Standard Specifications, and shall be of a size and grade determined by the Contractor.

Test soil nail assemblies shall be lengthened or additional test soil nail assemblies shall be installed when ordered by the Engineer. The lengthening or addition of test soil nail assemblies, when ordered by the Engineer, will be paid for as extra work as provided in Section 4-1.03D, "Extra Work," of the Standard Specifications.

Splicing of test soil nails shall be made only at locations outside of the bonded length.

Anchorage System

Anchorage for soil nails shall conform to the details shown on the plans and the provisions in Section 75-1.02, "Miscellaneous Iron and Steel," of the Standard Specifications, except that nuts, washers, wedges, and bearing plates to be fully encased in concrete, grout, or shotcrete need not be galvanized. Concrete anchors on the bearing plates shall conform to the provisions for stud connectors in Section 55-2, "Materials," of the Standard Specifications.

Grout

Grout shall conform to the provisions in Section 50-1.09, "Bonding and Grouting," of the Standard Specifications. California Test 541 will not be required nor will the grout be required to pass through a screen with a 1.80-mm maximum clear opening prior to being introduced into the grout pump. Fine aggregate may be added to the grout mixture of portland cement and water in drilled holes 150 mm or greater in diameter, but only to the extent that the cement content of the grout is not less than 600 kilograms per cubic meter of grout. Fine aggregate, if used, shall conform to the provisions in Section 90-2, "Materials," and Section 90-3, "Aggregate Gradings," of the Standard Specifications. Grout with fine aggregate shall have a nominal penetration equal to or greater than 90 mm when measured in conformance with California Test 533, and shall have an air content of equal to or less than 2 percent when measured in conformance with California Test 504. Air entraining admixtures shall not be used for grout with fine aggregate.

The consistency of grout with fine aggregate shall be verified prior to use by producing a batch to be tested. The test batch shall be produced and delivered to the project under conditions and in time periods similar to those expected during the placement of grout in the soil nails. Grout for the test batch shall be placed in an excavated hole or suitable container of adequate size to allow testing in conformance with California Test 533. The test batch shall demonstrate that the proposed grout mix achieves the specified nominal penetration. Upon completion of the testing, the grout shall be disposed of in conformance with the provisions in Section 7-1.13, "Disposal of Material Outside the Highway Right of Way," of the Standard Specifications.

CONSTRUCTION

Soil nails shall be installed in drilled holes in an expeditious manner so that caving or deterioration of the drilled hole does not occur. No portion of the drilled hole shall be left open for more than 60 minutes prior to soil nail placement and grouting unless otherwise approved by

CONTRACT NO. 04-0120R4

CONTRACT CHANGE ORDER NO 75

SHEET 85 OF 136

the Engineer.

Difficult soil nail assembly construction is anticipated due to caving soils, hazardous materials, cobbles and bouldersand subsurface concrete debris.

Drilling

Drilling equipment shall be designed to drill straight and clean holes. The drilling method and the size and capability of the drilling equipment shall be as approved in the working drawings. Drill rigs shall have the capability of anchorage installation and grout placement through the use of drill casing or hollow-stem augers.

At locations where caving conditions are anticipated, sufficient casing and auger lengths shall be available on site to maintain uninterrupted installation of anchors.

At locations where hard drilling conditions such as rock, cobbles, boulders, or obstructions are anticipated, a down hole pneumatic hammer drill rig and drill bit shall be available on site to drill holes for soil nail assemblies.

Holes shall be drilled in the natural foundation materials. Holes for test soil nail assemblies shall be of the same diameter as those for the production soil nail assemblies they represent.

Holes shall be cleaned to remove material resulting from the drilling operations and to remove any other material that would impair the strength of the soil nail assemblies or test soil nail assemblies. Foreign material dislodged or drawn into the holes during construction of the assemblies shall be removed. Water for cleaning holes shall not be used, unless full hole length hollow-stem augers or casing is maintained in the same hole during cleaning and soil nail assembly installation. Soil nail assemblies and test soil nail assemblies shall not be installed in the drilled holes until the holes have been inspected by the Engineer.

Installing Soil Nails and Test Soil Nails

Soil nails and test soil nails shall be installed in the drilled holes using centralizers. Centralizers shall adequately support the bar in the center of the drilled hole and shall be spaced at a maximum of 1.5 m on center along the length of the bar, and 0.5-m from the end of the bar.

Where the soil nail cannot be completely inserted, the Contractor shall remove the bar and clean or redrill the hole to permit unobstructed installation. Partially installed bars shall not be driven or forced into the drilled hole and will be rejected. When open-hole drilling methods are being used, the Contractor shall have hole cleaning tools on-site suitable for cleaning drilled holes along their full length just prior to bar insertion and grouting.

Grouting

The length of drilled hole shall be verified and recorded by the Contractor before grouting.

Grout shall be injected at the low end of the drilled hole and shall fill the drilled hole with a dense grout free of voids or inclusion of foreign material. Cold joints shall not be used in grout placement. Soil nails shall be grouted full length.

Only the bonded length of test soil nails shall be initially grouted. Initial grouting shall be confined to the bonded length by packers or other approved devices. For test soil nails, grouting of the remainder of the drilled hole shall not be done until pullout tests have been completed and approved by the Engineer.

After placing the grout for soil nails and test soil nails, they shall remain undisturbed for the cure time stated in the approved soil nail working drawings.

CONTRACT NO. 04-0120R4

CONTRACT CHANGE ORDER NO 75

SHEET 86 OF 136

Securing Soil Nails

Any remaining void at the exterior end of the drilled hole for a soil nail assembly shall be filled with shotcrete and the soil nail secured at the face of the shotcrete. The steel bearing plate shall be seated with full bearing on the shotcrete surface and the nut for the soil nail shall be hand tightened before the initial set of the shotcrete. The nut shall be made wrench tight after the shotcrete has set for 24 hours, unless a shorter time is approved by the Engineer.

Securing Test Soil Nails

Testing shall be performed against a temporary bearing yoke which bears directly on the shotcrete facing. Test loads transmitted through the temporary bearing yoke shall not fracture the shotcrete or cause displacement or sloughing of the soil surrounding the drilled hole. No part of the yoke shall bear within 150 mm of the edge of blockout.

Test soil nails shall be removed to behind the front face of the shotcrete after testing has been completed. The remaining length of void in the drilled hole shall be grouted and the blockout in the shotcrete facing filled with either grout or shotcrete.

TESTING

Test soil nail assemblies shall be pullout tested by the Contractor in the presence of the Engineer. A pullout test shall consist of incrementally loading the assembly until either the pullout test load has been held for one minute or the total measured movement of the soil nail exceeds 50 mm, at which point the load shall be recorded as part of the test data and submitted to the Engineer at the conclusion of each test.

The Contractor shall monitor and record total movement of the test soil nail relative to the grout during application of the test load.

Applied test loads shall be determined by using either a calibrated pressure gage or a load cell. Movements of the end of the soil nail, relative to an independent fixed reference point, shall be measured and recorded to the nearest 25 μm at each increment of load, including the ending alignment load, during the load tests.

The pressure gage shall have an accurately reading dial at least 150 mm in diameter. Each jack and its gage shall be calibrated as a unit with the cylinder extension in the approximate position that it will have at final jacking force, and shall be accompanied by a certified calibration chart. Each jack and pressure gage assembly shall be calibrated in conformance with Section 50-1.08, "Prestressing," of the Standard Specifications. The load cell shall be calibrated and shall be provided with an indicator capable of measuring the test load in the soil nail. The range of the load cell shall be such that the lower 10 percent of the manufacturer's rated capacity will not be used in determining the jacking force.

The test load may be verified by State forces with either State-furnished load cells or pressure cells, or with State-furnished Vibra-Tension equipment operated in conformance with the requirements of California Test 677. The Contractor shall provide sufficient labor, equipment, and material to install and support such testing equipment at the soil nails and to remove the testing equipment after the testing is complete, as ordered by the Engineer.

The pullout test procedures shall conform to the following:

A. The pullout test shall be conducted by measuring and recording the test load applied to the test soil nail and the test soil nail end movement at each load listed in the following loading schedule.

CONTRACT NO. 04-0120R4

CONTRACT CHANGE ORDER NO 75

SHEET 87 OF 136

PULLOUT TEST LOADING SCHEDULE

AL
0.20M
0.30M
0.40M
0.50M
0.60M
0.70M
0.80M
0.90M
1.00M (PULLOUT TEST LOAD)
AL

(M = MAXIMUM TEST LOAD (kN) = $4.712\sigma_b DL$)
Where σ_b=Ultimate bond stress between grout and drilled hole as shown on the plans, in kPa; D=actual drilled hole diameter, in meters, and L=bonded length in meters.
(AL = ALIGNMENT LOAD = 0.1M)

B. Each increment of load shall be applied in less than one minute and held for at least one minute but not more than 2 minutes, except that the load equal to 0.70M shall be held for 10 minutes. During the 10-minute load hold, the movement of the end of the soil nail shall be measured at 1, 2, 3, 4, 5, 6, and 10 minutes. The observation period for the 10-minute load hold shall start when the pump begins to apply the increment of load from 0.60M to 0.70M. If the creep movement measured between one minute and 10 minutes at 0.70M is less than one mm, the load shall continue to be increased incrementally to 1.00M, then reduced to the ending alignment load. The test soil nail assembly shall be considered acceptable if 1) the creep movement measured between one minute and 10 minutes is less than one mm, 2) the total measured movement is greater than 80 percent of the theoretical elastic elongation of the test nail unbonded length at the 1.0M load, and 3) the total measured movement is less than 50 mm.
C. If the load of 0.70M cannot be maintained for 10 minutes with one mm or less creep movement, the 0.70M load shall be maintained for an additional 50 minutes. Total movement shall be measured at 15, 20, 25, 30, 45, and 60 minutes. If the test load is held for 60 minutes, a creep curve showing the creep movement between 10 minutes and 60 minutes shall be plotted as a function of the logarithm of time. If the creep curve plotted from the movement data indicates a creep rate of less than 2.0 mm for the last log cycle of time, the load shall continue to be increased incrementally to 1.00M, then reduced to the ending alignment load. The test soil nail assembly shall be considered acceptable if 1) the creep curve plotted from the movement data indicates a creep rate of less than 2.0 mm for the last log cycle of time, 2) the total measured movement is greater than 80 percent of the theoretical elastic elongation of the test nail unbonded length at the 1.0M load, and 3) the total measured movement is less than 50 mm.
D. The soil nail shall be unloaded only after completion of the test.

Test soil nails that fail to meet acceptance criteria shall be extracted when requested by the Engineer. Full compensation for extracting test soil nails shall be considered as included in the

CONTRACT NO. 04-0120R4

CONTRACT CHANGE ORDER NO 75

SHEET 88 OF 136

contract price paid per meter for soil nail assembly, and no separate payment will be made therefor.

The Contractor shall furnish to the Engineer complete test results for each soil nail assembly tested. Data for each test shall list key personnel, test loading equipment, test soil nail location, hole diameter and depth, bond length, type of soil, method of drilling, and amount of ground water encountered within the bond length. Test data shall also include the dates and times of drilling, test soil nail installation, grouting, and testing. The test load and amount of displacement shall be included in the test data when any displacement of the test soil nail relative to the grout occurs during application of the test load.

MEASUREMENT

Soil nail assembly and test soil nail assembly will be measured and paid for by the meter. The length to be paid for will be the length of soil nail assembly or test soil nail assembly measured along the bar centerline from the back face of shotcrete to the tip end shown on the plans or ordered in writing by the Engineer.

PAYMENT

The contract price paid per meter for soil nail assembly shall include full compensation for furnishing all labor, materials, tools, equipment, and incidentals, and for doing all the work involved in constructing the soil nail assemblies, complete in place, as shown on the plans, as specified in the Standard Specifications and these special provisions, and as directed by the Engineer.

Test soil nail assemblies will be paid for as soil nail assembly.

Full compensation for testing of the test soil nail assemblies shown on the plans shall be considered as included in the contract price paid per meter for soil nail assembly, and no separate payment will be made therefor.

Full compensation for repair of all damage to existing structures, restoration of grade in subsided areas, and all other damage done by drilling shall be considered as included in the contract price paid per meter for soil nail assembly, and no additional compensation will be allowed therefor.

Full compensation for furnishing, installing, and removing casing shall be considered as included in the contract price paid per meter for soil nail assembly, and no additional compensation will be allowed therefor.

The quantities of trial batch grout will not be included in any contract item of work, and full compensation for furnishing, producing, and disposing of trial batches shall be considered as included in the contract price paid per meter for soil nail assembly, and no additional compensation will be allowed therefor.

10-1.18 GEOCOMPOSITE DRAIN SYSTEMS

At the soil nail walls, and retaining wall , the geocomposite drain systems shall conform to the details shown on the plans and the following:

A. Attention is directed to "Engineering Fabrics" under "Materials" of these special provisions.
B. Geocomposite drain shall consist of a manufactured core not less than 6.35 mm thick nor more than 50 mm thick with one or both sides covered with a layer of filter fabric that will provide a drainage void. The drain shall produce a flow rate, through the drainage

CONTRACT NO. 04-0120R4

CONTRACT CHANGE ORDER NO 75

SHEET 89 OF 136

void, of at least 25 liters per minute per meter of width at a hydraulic gradient of 1.0 and a minimum externally applied pressure of 239 kPa.

C. A Certificate of Compliance conforming to the provisions in Section 6-1.07, "Certificates of Compliance," of the Standard Specifications shall be furnished for the geocomposite drain certifying that the drain produces the required flow rate and complies with these special provisions. The Certificate of Compliance shall be accompanied by a flow capability graph for the geocomposite drain showing flow rates for externally applied pressures and hydraulic gradients. The flow capability graph shall be stamped with the verification of an independent testing laboratory.

D. Filter fabric for the geocomposite drain shall conform to the provisions for fabric for underdrains in Section 88, "Engineering Fabrics," of the Standard Specifications.

E. The manufactured core shall be either a preformed grid of embossed plastic, a mat of random shapes of plastic fibers, a drainage net consisting of a uniform pattern of polymeric strands forming 2 sets of continuous flow channels, or a system of plastic pillars and interconnections forming a semirigid mat.

F. The core material and filter fabric shall be capable of maintaining the drainage void for the entire height of geocomposite drain. Filter fabric shall be integrally bonded to the side of the core material with the drainage void. Core material manufactured from impermeable plastic sheeting having nonconnecting corrugations shall be placed with the corrugations approximately perpendicular to the drainage collection system.

G. The geocomposite drain shall be installed with the drainage void and the filter fabric facing the embankment. The fabric facing the embankment side shall overlap a minimum of 75 mm at all joints and wrap around the exterior edges a minimum of 75 mm beyond the exterior edge. If additional fabric is needed to provide overlap at joints and wrap-around at edges, the added fabric shall overlap the fabric on the geocomposite drain at least 150 mm and be attached thereto.

H. Should the fabric on the geocomposite drain be torn or punctured, the damaged section shall be replaced completely or repaired by placing a piece of fabric that is large enough to cover the damaged area and provide a minimum 150-mm overlap.

I. Plastic pipe shall conform to the provisions for edge drain pipe and edge drain outlets in Section 68-3, "Edge Drains," of the Standard Specifications.

J. Treated permeable base to be placed around the slotted plastic pipe at the bottom of the geocomposite drain shall be cement treated permeable base conforming to the provisions for cement treated permeable base in Section 29, "Treated Permeable Bases," of the Standard Specifications and these special provisions.

PAYMENT

Full compensation for furnishing and installing the geocomposite drain system at the soil nail walls, including geocomposite drain, plastic pipe, treated permeable base and filter fabric, and drainage pad (minor concrete), shall be considered as included in the contract price paid per meter for soil nail assembly, and no additional compensation will be allowed therefor.

Full compensation for furnishing and installing the geocomposite drain system at the retaining wall, including geocomposite drain, plastic pipe, treated permeable base and filter fabric and concrete gutter (minor concrete), shall be considered as included in the prices paid for the items of work involved and no additional compensation will be allowed therefor.

CONTRACT NO. 04-0120R4

CONTRACT CHANGE ORDER NO 75

SHEET 90 OF 136

10-1.19 STRUCTURE BACKFILL (BRIDGE) (CEMENT MODIFIED)

Structure backfill (bridge) (cement modified) shall consist of soil material, portland cement, and water uniformly mixed, compacted, finished, and cured in accordance with these special provisions.

Portland cement used in structure backfill (bridge) (cement modified) shall conform to the provisions in Section 90-2.01, "Portland Cement," of the Standard Specifications.

Water used for structure backfill (bridge) (cement modified) shall be free from oil, salts and other impurities which would have an adverse effect on the quality of the backfill material.

Soil material for structure backfill (bridge) (cement modified) shall conform to the provisions in Section 19-3.06 "Structure Backfill," of the Standard Specifications.

Soil cement mixture shall contain not less than six percent cement by weight.

No soil-cement mixture shall be placed when air temperature is less than 5 degrees Celsius in the shade.

The operations of adding cement and water to the soil, mixing, hauling, spreading, compacting, and finishing shall be continuous and completed in daylight. Compaction shall be started within one hour and completed within two hours after the addition of cement.

Mixing may be accomplished in a transverse rotary mixer or other similar equipment approved by the Engineer. Blending shall continue until a uniform color of the mixture is achieved.

The moisture content of the backfill material shall be between optimum and two percent above optimum as determined by ASTM Designation: D1557 immediately before mixing.

Backfill material shall be compacted to a relative compaction of not less than 90 percent of maximum dry density as determined by ASTM Designation: D558.

After compaction, the exposed surface receiving the next lift shall be roughened with a broom.

Successive lifts shall be placed not more than two hours after finishing of the previous lift. The final lift shall be stepped to retain the topsoil as shown on the plans.

Exposed backfill shall be protected against drying by curing in conformance with the water method or waterproof membrane method specified in Section 90-7.01, "Methods of Curing," of the Standard Specifications for a minimum of 72 hours after the final lift is placed. Curing shall commence as soon as practicable after placement and compaction, and shall in no case be delayed until after drying becomes evident or graying of the surface occurs.

Structure backfill (bridge) (cement modified) will be measured in cubic meters from the limits shown on the plans.

The contract price paid per cubic meter for structure backfill (bridge) (cement modified) shall include full compensation for furnishing all labor, materials, tools, equipment, and incidentals and for doing all the work involved in structure backfill (bridge) (cement modified) complete in place, including mixing, placing and compacting backfill, and furnishing and installing geogrid segment system to the soil nail wall as shown on the plans, as specified in the Standard Specifications and these special provisions, and as directed by the Engineer.

10-1.20 MOVE-IN/MOVE-OUT (EROSION CONTROL)

Move-in/move-out (erosion control) shall include moving onto the project when an area is ready to receive erosion control as determined by the Engineer, setting up all required personnel and equipment for the application of erosion control materials and moving out all personnel and equipment when erosion control in that area is completed.

CONTRACT NO. 04-0120R4

CONTRACT CHANGE ORDER NO 75

SHEET 91 OF 136

When areas are ready to receive applications of erosion control (Types D), as determined by the Engineer, the Contractor shall begin erosion control work in that area within 5 working days of the Engineer's notification to perform the erosion control work.

Attention is directed to the requirements of erosion control (Types D) elsewhere in these special provisions.

Quantities of move-in/move-out (erosion control) will be determined as units from actual count as determined by the Engineer. For measurement purposes, a move-in followed by a move-out will be considered as one unit.

The contract unit price paid for move-in/move-out (erosion control) shall include full compensation for furnishing all labor, materials (excluding erosion control materials), tools, equipment, and incidentals and for doing all the work involved in moving in and removing from the project all personnel and equipment necessary for application of erosion control ((Types D), installation of Fiber Rolls, and installation of Erosion Control (Netting), , as shown on the plans, as specified in the Standard Specifications and these special provisions, and as directed by the Engineer.

No adjustment of compensation will be made for any increase or decrease in the quantities of move-in/move-out (erosion control) required, regardless of the reason for the increase or decrease. The provisions in Section 4-1.03B, "Increased or Decreased Quantities," of the Standard Specifications shall not apply to the item of move-in/move-out (erosion control).

10-1.21 EROSION CONTROL (TYPE B)

Erosion control (Type B) shall conform to the plans, the provisions in Section 20-2, "Materials," of the Standard Specifications and these special provisions.

Prior to installing the erosion control (Type B), prune existing plants and perform clearing and grubbing work in accordance with Section 16 "Clearing and Grubbing" of the Standard Specifications, to allow erosion control (Type B) to conform to the slopes face.

Erosion control (Type B) work shall consist of installing erosion control netting, twisted wire mesh and securing the netting and wire mesh to the slope surface with slope anchors and rope restraints at locations shown on the plans.

MATERIALS

Materials shall conform to the provisions in Section 20-2, "Materials," of the Standard Specifications and these special provisions.

Erosion Control Netting

Erosion control netting shall consist of 100 percent spun coir fiber and shall conform to the following:

Specification	Requirement
Weight, grams per square meter ASTM Designation: D 3776	400
Minimum Tensile Strength, kilonewtons, ASTM Designation: D 4595-86	9.0 to 11.3 kN/m in longitudinal direction (dry) 5.0 to 10.7 kN/m in cross-direction (dry) 6.0 to 9.8 kN/m in longitudinal direction (wet) 4.0 to 9.4 kN/m in cross- direction (wet)
Roll Width, meters, min.	4
Area/Roll, square meters, min.	200
Open Area, percent	63-70

Staples

Staples for erosion control netting shall be as shown on plans.

Twisted Wire Mesh Twisted wire mesh, shall be zinc coated (0.24 kg/m2), 12-gage (2.69 mm), and polyvinyl chloride coated. Twisted-mesh wires shall form a uniform hexagonal pattern and shall be formed with a nonraveling twist. The area of the hexagonal opening shall not exceed 4 inches along any axis. Individual wires of twisted wire mesh shall conform to the definitions and requirements in ASTM Designation: A 641/A 641M.

Twisted wire mesh panels shall be approximately 3.65 meters wide.

Twisted wire mesh shall be coated nonconductive material, primarily polyvinyl chloride (PVC). The twisted wire mesh shall be coated with the PVC material after the zinc coating is applied.

The PVC coating shall be evaluated by infrared spectral scan. The scan must closely match those of tested known acceptable products already on file at the Transportation Laboratory. The PVC costing shall be resistant to degradation by ultraviolet (UV) radiation. The color of the PVC shall be black or dark brown and be approved by the Engineer prior to installation.

The minimum thickness of PVC which covers the wire shall be 0.38-mm, measured radially at any cross-section transverse to the wire length.

The PVC coating shall be complete by visual inspection. There shall be no nicks, cuts, holidays or abraded areas in the PVC coating of the mesh. Minor cuts, nicks, and other minor imperfections due to manufacturing, will be permitted along selvage-wrapped edges of twisted mesh. PVC will not be required to coat the ends of either style of mesh where the PVC has been trimmed along wire or panel edges during the normal manufacturing process.

PVC coating shall be resistant to degradation by ultraviolet (UV) radiation. A suitable, UV-resistant additive shall be blended with the PVC. This additive shall be identified on the Certificate of Compliance.

The color of the PVC shall be brown. The color shall be resistant to fading when exposed to natural sunlight.

Individual wires of twisted wire or welded wire mesh shall meet the following minimum requirements:

CONTRACT NO. 04-0120R4

CONTRACT CHANGE ORDER NO 75

SHEET 93 OF 136

WIRE MESH MATERIAL PROPERTIES

Characteristic	Test Designation	Requirement
Minimum tensile strength	ASTM A370	410 MPa
Wire Size	USA Steel Wire Gage	12
Wire Diameter	ASTM A641/A641 M	2.69 mm
(Minimum)	ASTM A641/A641 M	2.59 mm
Galvanizing, Zinc	ASTM A641/A641 M, Class 3 and ASTM A90 / A90M	230 g/m^2
Wire Size	USA Steel Wire Gage	11
Wire Diameter	ASTM A641/A641 M	3.05 mm
(Minimum)	ASTM A641/A641 M	2.95 mm
Galvanizing, Zinc	ASTM A641/A641 M, Class 3 and ASTM A90 / A90M	240 g/m^2
Wire Size	USA Steel Wire Gage	9
Wire Diameter (Minimum)	ASTM A641/A641 M	3.76 mm
Galvanizing, Zinc	ASTM A641/A641 M	3.66 mm
	ASTM A641/A641 M, Class 3 and ASTM A90 / A90M	270 g/m^2

Wire rope shall be galvanized in accordance with the requirements of Federal Specification: RR-W-410D.

Tie wires used to fasten the mesh to cables or to adjacent panels shall be galvanized and 13.5-gage (2.09 mm) minimum. The twisted wire mesh shall be securely fastened to the rock drapery system.

Slope Anchors

Slope anchors installed in soil shall be made of ductile iron or aluminum with minimum yield strength of 1364 kg. The anchor shall be designed to pivot once embedded into the ground. The anchor pivoting below ground while the anchor is being set achieves holding capacity and pull out resistance. The anchor rod shall be hot dipped galvanized and shall be equipped with a forged screw zinc coated anchor rod. The anchor rod shall be a No. 3 bar (10 mm min diameter) and an overall length of 1.2-m. The entire rod shall be threaded.

At the option of the Contractor, an anchor wires may be used in lieu of the anchor rods and shall be 1.2-m__in length and equipped with a stainless steel soft eye including copper ferrule for lower termination and a stainless steel washer and aluminum ferrule for top termination. Anchor wires shall be installed per manufacturer's instructions and as directed by the Engineer.

Anchor Plate

Anchor plates shall be either metal treated with a corrosion resistant coating or polyethylene plastic plates if anchor wires are used. The center of the anchor plate shall be drilled with a hole sufficient to accommodate the diameter of the anchor rod or wire.

Metal anchor plate corners shall be chamfered as shown on the plans.

Polyethylene plastic plates shall be a minimum of 90 mm in diameter and 6 mm thick.

Rope Restraint

Rope restraint shall be a 16-mm minimum diameter hemp rope that is multi-strand and braided.

CONTRACT NO. 04-0120R4

CONTRACT CHANGE ORDER NO 15

SHEET 94 OF 136

Miscellaneous Material

All miscellaneous hardware such as thimbles, bolts, nuts, etc., shall be galvanized and conform to Section 75, "Miscellaneous Metals," of the Standard Specifications.

All structural steel components shall comply with ASTM Designation A 36.

All bolts, nuts, and washers shall comply with ASTM Designation A 325.

INSTALLATION

Temporary slope ladders may be needed during installation to prevent sloughing of material.

Erosion control netting strips shall be placed loosely on the slope with the vertical joints perpendicular to the slope contour lines. Vertical and transverse joints of each strip shall be overlapped a minimum of 100 mm with adjacent strips and stapled. Wire staples shall be driven perpendicular to the slope, and shall be located and spaced in a triangular pattern 1.8-m on center and along netting edge. Staples shall be driven such that the top of the staple is flush with the ground surface. All ends of the netting shall be buried in place as shown on the plans.

Wire mesh shall be placed over the erosion control netting with the vertical joints perpendicular to the slope contour lines and staggered between sections of the erosion control netting to avoid overlap of joints.

Wire mesh shall be secured to the slope with slope anchor assemblies as shown on the plans. Each wire mesh panel shall overlap the adjacent panel by 100 mm and shall be fastened together with tie wires 150 mm apart along the overlapped edged. Due to irregular slope surface, individual panels may not overlap each other along the panel edges. In order to mold each panel to lie flush with the slope face and to maintain as perpendicular as possible the alignment of each panel, some gaps between panels may be necessary. Gaps shall be filled by installing filler panels fitted to provide the specified overlap requirement shall be attached by either threading and lacing a tie wire along the perimeter edge or installing ties at a maximum spacing of 150 mm along the perimeter.

The anchor rod shall be tensioned to set the anchor in accordance with the manufacturer's instructions. Once the rod has been driven into the soil to its maximum depth, the anchor rod shall be drawn back at least 100 mm or a torque of 1 m/kg is achieved to ensure that the anchor has reached full pivot. A torque wrench may be required to verify pull out resistance. The Engineer shall randomly test installed slope anchors to verify adequate pull out strength.

Once the wire mesh panels are laid down, the anchor plate and rope restraints shall be installed to secure all sections of wire mesh together. Anchor plates shall be located and spaced as shown on the plans. Slope anchor assemblies shall be located at the overlapped edge portion of adjoining panels or at a closer interval that conforms to the existing topography, as shown on the plans.

The top portion of the anchor rods shall be exposed above grade to ensure a sufficient length of the threaded portion of all slope anchors is above the plane of the slope to accept the metal anchoring plate, rope restraint, washers and nuts.

A rope restraint shall be installed over the wire mesh and secured at each anchor plate as shown on the plans.A wire rope restraint shall be installed over the wire mesh at the top perimeter by threading the restraint through the top longitudinal edge of each panel and securing the restraint to the anchor assemblies as shown on the plans. The top of the wire mesh shall be folded over the wire rope restraint, fastened and the panel laid flush on the slope.

CONTRACT NO. 04-0120R4

CONTRACT CHANGE ORDER NO 75

SHEET 95 OF 136

CERTIFICATE OF COMPLIANCE

The contractor shall provide the Engineer with a Certificate of Compliance from the manufacturer in accordance with the provisions of Section 6-1.07 "Certificate of Compliance" of the Standards.

MEASUREMENT AND PAYMENT

The quantity of erosion control (Type B) will be determined by the square meter from actual measurement of the area covered by the erosion control netting and wire mesh excluding overlapped portions.

The contract price paid per square meter for erosion control (Type B) shall include full compensation for furnishing all labor, materials, tools, equipment, and incidentals, and for doing all the work involved in installing and securing erosion control netting and wire mesh, including furnishing temporary ladders and anchor wires in lieu of slope anchors, complete in place as shown on the plans, as specified in the Standard Specifications and these special provisions, and as directed by the Engineer.

10-1.22 PILING

GENERAL

Unless otherwise shown on the plans, piling shall conform to the provisions in Section 49, "Piling," of the Standard Specifications, and these special provisions.

Unless otherwise specified, welding of any work performed in conformance with the provisions in Section 49, "Piling," of the Standard Specifications, shall be in conformance with the requirements in AWS D1.1.

Epoxy coated reinforcement for pile anchorages shall conform to "Epoxy-Coated Prefabricated Reinforcement," of these special provisions.

Foundation recommendations are included in the "Information Handout" available to the Contractor as provided for in Section 2-1.03, "Examination of Plans, Specifications, Contract, and Site of Work," of the Standard Specifications.

Attention is directed to "Welding" of these special provisions.

If at any time during pile driving the blow count exceeds three times the required blow count as determined from Section 49, "Piling," of the Standard Specifications, the Contractor shall discontinue driving and notify the Engineer. Driving shall not resume until so ordered by the Engineer.

Difficult pile installation is anticipated due to the presence of caving soils, hazardous materials, high ground water, cobbles and boulders, rock cuttings, timber piles, subsurface concrete debris, underground utilities, and the requirements of pile embedment into rock.

Drill cuttings from areas within the limits of hazardous materials shall be managed in conformance with the provisions of "Hazardous Material Excavation" in "Earthwork," of these special provisions.

When a calculated ultimate geotechnical capacity is shown on the plans for piling, that value shall be utilized in lieu of nominal resistance in Section 49, "Piling," of the Standard Specifications, and these special provisions.

Jetting and Drilling

Jetting to obtain the specified penetration in conformance with the provisions in Section 49-1.05, "Driving Equipment," of the Standard Specifications shall not be used for driven type piles.

Drilling to obtain the specified penetration in conformance with the provisions in Section 49-1.05, "Driving Equipment," of the Standard Specifications shall not be used for driven type piles. Predrilling is allowed through the whole depth of the cement modified backfill under the footings. The Contractor shall provide special driving tips or heavier pile sections, to predrill holes not greater than the least dimension of the pile to the proper depth, spud the piles, or take other measures to prevent damage to the pile during driving.

Materials resulting from jetting or drilling holes shall be disposed of in conformance with the provisions in Section 19-2.06, "Surplus Material," of the Standard Specifications.

Full compensation for providing special tips, heavier sections, predrilling, spudding or employing other measures to prevent damage to the piles shall be considered as included in the contract price paid per unit for drive steel pile of the size shown on the plans, and no additional compensation will be allowed therefor.

STEEL SOLDIER PILING

This work shall consist of furnishing and installing steel piling; securing the piling prior to and during concrete encasement, and shaping the tops of the pilesin accordance with the details shown on the plans, and these special provisions.

Construction

Steel soldier piles shall be placed in a drilled hole and shall be plumbed and aligned before placing concrete backfill. Alignment shall be maintained while placing backfill material in the drilled holes.

MEASUREMENT AND PAYMENT (PILING)

Measurement and payment for the various types and classes of piles shall conform to the provisions in Sections 49-6.01, "Measurement," and 49-6.02, "Payment," of the Standard Specifications and these special provisions.

The contract price paid per meter for furnish and install soldier pileof the type shown in the Engineer's Estimate shall include full compensation for furnishing all labor, materials, tools, equipment, and incidentals, and for doing all the work involved in furnishing and installing the steel piles at the site to the required penetration, including securing the piling to maintain accurate alignment prior to and during encasing the pile with concrete, shaping pile tops, as specified in the Standard Specifications and these special provisions, and as directed by the Engineer.

10-1.23 DRILLED HOLES

Holes for steel soldier piles shall be drilled into natural foundation materials at the location shown on the plans and shall conform to the provisions in Section 49, "Piling," of the Standard Specifications and these special provisions.

Drilled holes shall be accurately located and shall be straight and true. When the piles are plumbed and aligned, the steel piles shall be at least 25 mm clear of the sides of the hole for the

CONTRACT NO. 04-0120R4

CONTRACT CHANGE ORDER NO 75

SHEET 97 OF 136

full length of the hole to be filled with concrete backfill. Holes which do not provide the clearance around steel piles shall be reamed or enlarged at the Contractor's expense.

Temporary casings or tremie seals shall be furnished and placed where necessary to control water or to prevent caving of the hole.

Difficult drilling is anticipated due to the presence of caving soilsandcobbles and boulders.

Attention is directed to rock subsurface foundation material at the soldier pile retaining wall site. At locations where hard drilling conditions such as cobbles, boulders or obstructions are anticipated, suitable drilling equipment shall be available on site to drill holes for soldier piles.

Loose materials existing at the bottom of the hole after drilling operations have been completed shall be removed before placing the pile.

Materials resulting from drilling holes shall be disposed of in conformance with the provisions in Section 19-2.06, "Surplus Material," of the Standard Specifications.

Drilling mud or chemical stabilizers shall not be used. Surface water shall not be permitted to enter the hole and all water in the hole shall be removed before placing concrete therein.

Casing, if used in drilling operations, shall be removed from the hole as concrete is placed therein. The bottom of the casing shall be maintained not more than 1500 mm nor less than 300 mm below the top of the concrete during casing withdrawal and concrete placing operations. Separation of the concrete during withdrawal operations shall be avoided by hammering or otherwise vibrating the casing. The methods used to withdraw temporary casings shall preclude contamination of the concrete and commingling of the soil and concrete or of any ground water and concrete.

The contract price paid per meter for 610 mm drilled hole (soldier pile) of the diameter shown on the plans shall include full compensation for furnishing all labor, materials, tools, equipment, and incidentals and for doing all the work involved in drilling holes for soldier piles, including disposing of the material resulting from drilled holes, dewatering, casing holes and removing casing, and providing tremie seals, complete in place, as shown on the plans, as specified in the Standard Specifications and these special provisions, and as directed by the Engineer.

10-1.24 CONCRETE STRUCTURES

Portland cement concrete structures shall conform to the provisions in Section 51, "Concrete Structures," of the Standard Specifications and these special provisions.

Shotcrete shall not be used as an alternative construction method for reinforced concrete members unless otherwise specified.

AGGREGATE GRADINGS

In particularly congested areas of the structures, such as the columns, a maximum combined aggregate grading of 12.5-mmconforming to the requirements in Section 90-3, "Aggregate Gradings," of the Standard Specifications may be used when approved by the Engineer.

MEASUREMENT AND PAYMENT

Measurement and payment for concrete in structures shall conform to the provisions in Section 51-1.22, "Measurement," and Section 51-1.23, "Payment," of the Standard Specifications and these special provisions.

CONTRACT NO. 04-0120R4

CONTRACT CHANGE ORDER NO 75

SHEET 98 OF 136

10-1.25 REINFORCEMENT

Reinforcement shall conform to the provisions in Section 52, "Reinforcement," of the Standard Specifications and these special provisions.

Where ASTM Designations: A706/A706M reinforcing bars are specified on the plans or in these special provisions, the minimum percentage of elongation in 200 mm shall be 12% for Bar Nos. 43 and 57 in Table 2 of ASTM A706/A706M Specifications.

The Department's mechanical splices prequalified list can be found at the following internet site:

http://www.dot.ca.gov/hq/esc/approved_products_list/

The provisions of "Welding Quality Control" of these special provisions shall not apply to resistance butt welding.

MEASUREMENT AND PAYMENT

Measurement and payment for reinforcement in structures shall conform to the provisions in Section 52-1.10, "Measurement," and Section 52-1.11, "Payment," of the Standard Specifications and these special provisions.

Full compensation for couplers as shown on the plans shall be considered as included in the contract price paid per kilogram for bar reinforcing steel (bridge) and no additional compensation will be allowed therefor.

10-1.26 ALTERNATIVE PIPE

Alternative pipe culverts shall conform to the provisions in Section 62, "Alternative Culverts," of the Standard Specifications and these special provisions.

10-1.27 PLASTIC PIPE

Plastic pipe shall conform to the provisions in Section 64, "Plastic Pipe," of the Standard Specifications and these special provisions.

10-1.28 REINFORCED CONCRETE PIPE

Reinforced concrete pipe shall conform to the provisions in Section 65, "Reinforced Concrete Pipe," of the Standard Specifications and these special provisions.

Where embankment will not be placed over the top of the pipe, a relative compaction of not less than 85 percent shall be required below the pipe spring line for pipe installed using Method 1 backfill in trench, as shown on Standard Plan A62D. Where the pipe is to be placed under the traveled way, a relative compaction of not less than 90 percent shall be required unless the minimum distance between the top of the pipe and the pavement surface is the greater of 1.2 m or one half of the outside diameter of the pipe.

Except as otherwise designated by classification on the plans or in the specifications, joints for culvert and drainage pipes shall conform to the plans or specifications for standard joints.

When reinforced concrete pipe is installed in conformance with the details shown on Standard Plan A62DA, the fifth paragraph of Section 19-3.04, "Water Control and Foundation Treatment," of the Standard Specifications shall not apply.

CONTRACT NO. 04-0120R4

CONTRACT CHANGE ORDER NO 75

SHEET 99 OF 136

When solid rock or other unyielding material is encountered at the planned elevation of the bottom of the bedding, the material below the bottom of the bedding shall be removed to a depth of 1/50 of the height of the embankment over the top of the culvert, but not less than 150 mm nor more than 300 mm. The resulting trench below the bottom of the bedding shall be backfilled with structure backfill material in conformance with the provisions in Section 19-3.06, "Structure Backfill," of the Standard Specifications.

The excavation and backfill below the planned elevation of the bottom of the bedding will be paid for as extra work as provided in Section 4-1.03D, "Extra Work," of the Standard Specifications.

The Outer Bedding shown on Standard Plan A62DA shall not be compacted prior to placement of the pipe.

10-1.29 CORRUGATED METAL PIPE

Corrugated steel pipe culverts shall conform to the provisions in Section 66, "Corrugated Metal Pipe," of the Standard Specifications and these special provisions.

Attention is directed to "Earthwork" and "Controlled Low Strength Material" of these special provisions regarding structure backfill for pipe culverts.

Asphaltic mastic coating or polymeric sheet coating substituted for bituminous coating shall be placed on the outside and inside surfaces of the pipe.

10-1.30 CORRUGATED STEEL PIPE ISOLATION SLEEVE

Corrugated steel pipe isolation sleeve shall conform to the provisions in Section 66, "Corrugated Metal Pipe," of the Standard Specifications and these special provisions.

All metal parts in isolation sleeves shall be protected with bituminous coating conforming to the requirements in Section 66-1.03, "Protective Coatings, Linings and Pavings," of the Standard Specifications.

Steel plates, shapes, pipes, and expansion anchorage devices shall conform to Section 75, "Miscellaneous Metal," of the Standard Specifications.

The polyurethane material placed in the space between the column and corrugated isolation sleeve shall be as specified in ASTM C1029-02, Type 1, except it shall provide a reduced compressive strength not exceeding 5 psi.

The neoprene seal shall conform to the provisions in Section 51-1.14, "Waterstops," of the Standard Specifications.

Ponding or jetting of structure backfill will not be permitted. Structure backfill shall be compacted to a relative compaction of not more than 90 percent.

Where the top surfaces of isolation sleeves are sloped or stepped, the quantity in meters of corrugated steel pipe isolation sleeve to be paid for will be determined as the average of the longest height and the shortest height of each isolation sleeve.

Corrugated steel pipe shall be fabricated from zinc-coated steel sheet.

PAYMENT

The contract price paid per kilogram for corrugated steel pipe isolation sleeve shall include full compensation for furnishing all labor, materials, tools, equipment, and incidentals, and for doing all the work involved in corrugated steel pipe isolation sleeve, complete in place, including neoprene strip, filling annular spaces with polyurethane, steel plates and shapes and expansion anchorage devices, as shown on the plans, as specified in the Standard Specifications and these special provisions, and as directed by the Engineer.

10-1.31 WELDED STEEL PIPE

Welded steel pipe shall conform to the provisions in Section 70, "Miscellaneous Facilities," of the Standard Specifications and these special provisions.

Wrapping will not be required.

10-1.32 BRIDGE DECK DRAINAGE SYSTEM

Bridge deck drainage systems shall conform to the provisions for miscellaneous bridge metal in Section 75, "Miscellaneous Metal," of the Standard Specifications and these special provisions.

Self-tapping screws used for sleeve connections shall be hex-head stainless steel, installed in holes drilled to fit the self-tapping screws, conforming to the requirements of ASTM Designation: A 276, Type 316.

At the Contractor's option, fiberglass pipes and fittings with the same diameter and minimum bend radius as those shown on the plans, may be substituted for welded steel pipe in deck drain systems.

Fiberglass pipe and fittings shall conform to the requirements in ASTM Designation: D 2996, and shall have a minimum short-term rupture strength of 207 MPa. The adhesive type recommended by the manufacturer shall be used for joining pipe and fittings. Fiberglass pipe not enclosed in a box girder cell or encased in concrete shall be manufactured from ultraviolet-resistant resin pigmented with concrete-gray color, or be coated with a concrete-gray resin-rich exterior coating. Paint shall not be used. Fiberglass pipe treated with ultraviolet protection shall withstand a minimum of 2500 hours of accelerated weathering when tested in conformance with the requirements in ASTM Designation: G 154. Lamps shall be UV-B (313 nm wavelength). The resting cycle shall be 4 hours of ultraviolet exposure at 60°C, and then 4 hours of condensate exposure at 50°C. After testing, the surface of the pipe shall exhibit no fiber exposure, crazing, or checking, and only a slight chalking or color change.

Support spacing for fiberglass pipe shall be the same as shown on the plans for welded steel pipe. Pipe supports shall have a width of not less than 38 mm.

A Certificate of Compliance for fiberglass pipe and fittings shall be furnished to the Engineer in conformance with the provisions in Section 6-1.07, "Certificates of Compliance," of the Standard Specifications. The Certificate of Compliance shall include all laboratory test results conforming to the provisions specified herein.

For drainage piping NPS 8 or smaller, which is: (1) enclosed in a box girder cell and exposed for a length not greater than 6 m within the cell, or (2) encased in concrete, the Contractor shall have the option of substituting polyvinyl chloride (PVC) plastic pipe and fittings, with the same diameter and minimum bend radius as shown on the plans, for welded steel pipe.

The PVC plastic pipe and fittings shall be Schedule 40 conforming to the requirements of ASTM Designations: D 1785. The maximum support spacing for PVC plastic pipe shall be 2 m.

Couplings used to connect PVC plastic pipe or fiberglass pipe to steel shall be threaded or flanged. The sleeve connections shown on the plans shall not be used for either PVC plastic pipe or fiberglass pipe.

If PVC plastic pipe or fiberglass pipe is substituted for welded steel pipe, the quantity of drainage piping will be computed on the basis of the dimensions and details shown on the plans, and no change in the quantities to be paid for will be made because of the use of PVC plastic pipe or fiberglass pipe.

CONTRACT NO. 04-0120R4

CONTRACT CHANGE ORDER NO 75

SHEET 101 OF 136

Bridge deck drainage systems will be measured and paid for by the kilogram in the same manner specified for miscellaneous metal (bridge) in Section 75-1.06, "Measurement," and Section 75-1.07, "Payment," of the Standard Specifications.

CONTRACT NO. 04-0120R4

CONTRACT CHANGE ORDER NO 75

SHEET 102 OF 136

Contract No. 04-0120R4

04-SF-80 (KP 12.6/13.2)

CONTRACT PLAN
for
CONTRACT CHANGE ORDER No. 75

Date 05-25-07

INDEX OF SHEETS

SHEET No.	DESCRIPTION
1	Layout
2-3	Construction Details
4-6	Temporary Water Pollution Control Plans
7-9	Erosion Control Plans
10-14	Drainage Plans
15-16	Utility Plans
STRUCTURE PLANS	
17-33	Yerba Buena Island Transition Structure Br. No. 34-0006L/R, Bent W7 Westbound and Eastbound, Substructure Only

THE STANDARD PLANS LIST APPLICABLE TO THIS CONTRACT CHANGE ORDER IS INCLUDED IN THE SPECIAL PROVISIONS FOR THE CCO NO. 75.

CONTRACT NO. 04-0120R4

CONTRACT CHANGE ORDER NO 75

SHEET 103 OF 136

FOR COMPLETE RIGHT OF WAY AND ACCURATE ACCESS DATA, SEE RIGHT OF WAY RECORD MAPS AT DISTRICT OFFICE.

CURVE DATA

No.	R	Δ	T	L	N-COORDINATE	E-COORDINATE
①	900.00	18°54'19"	149.84	296.96	646767.979	1836729.976
②	1475	13°51'19"	179.22	356.68	647149.180	1835980.740

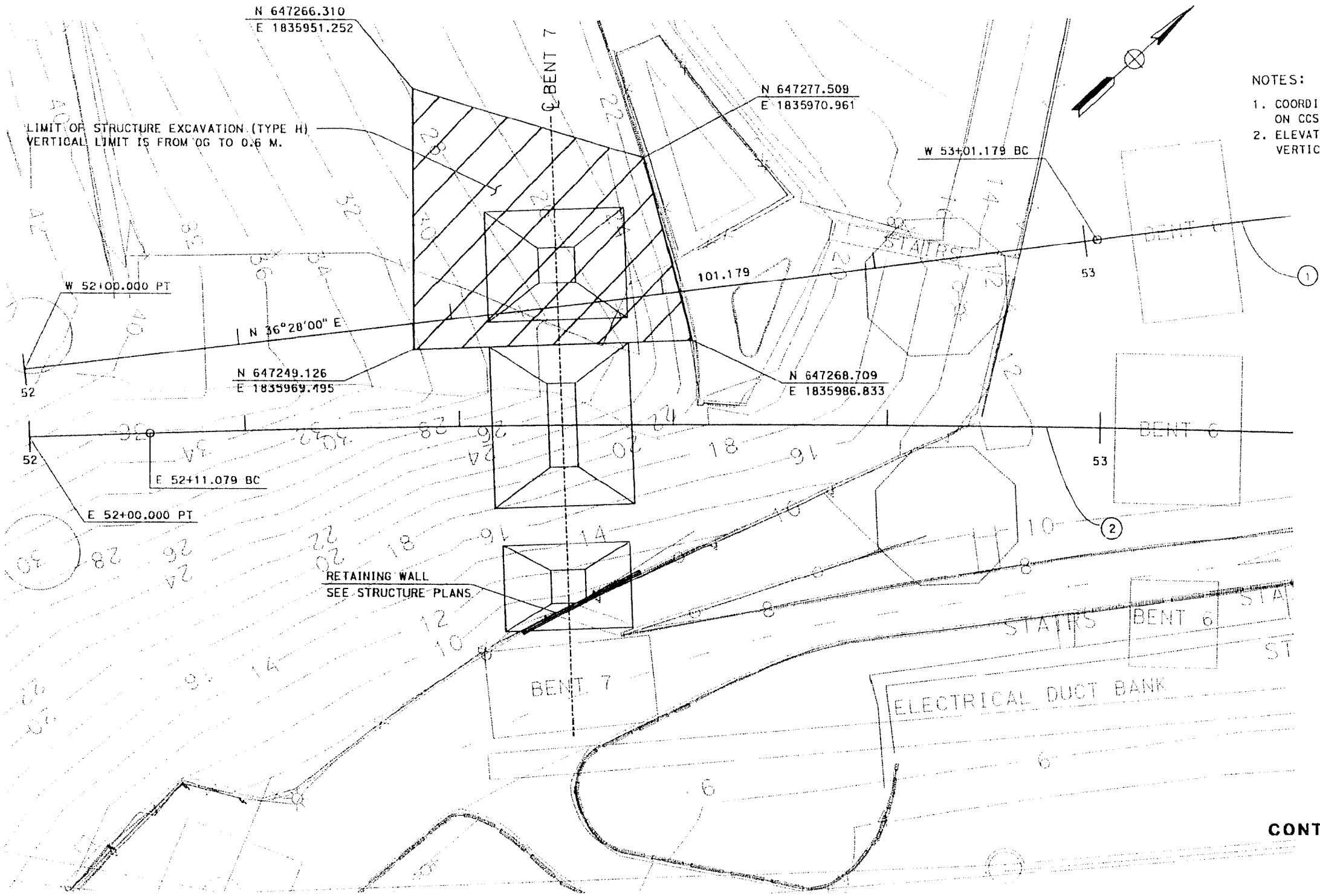

NOTES:

1. COORDINATES, DISTANCES AND BEARINGS ARE BASED ON CCS 1983 ZONE 3.
2. ELEVATIONS ARE BASED ON 1929 NATIONAL GEODETIC VERTICAL DATUM (NGVD).

DIST	COUNTY	ROUTE	KILOMETER POST TOTAL PROJECT	SHEET NO	TOTAL SHEETS
04	SF	80	12.6/13.2	1	33

Caltrans Metric

REGISTERED CIVIL ENGINEER 5/25/07

REGISTERED PROFESSIONAL ENGINEER — T.T. Lai — No. 63630 — Exp. 9-30-08 — CIVIL — STATE OF CALIFORNIA

PLANS APPROVAL DATE

The State of California or its officers or agents shall not be responsible for the accuracy or completeness of electronic copies of this plan sheet.

To get to the Caltrans web site, go to: http://www.dot.ca.gov

04-0120R4

CONTRACT CHANGE ORDER NO. 75

SHEET 104 OF 136

LAYOUT

SCALE 1:400

ALL DIMENSIONS ARE IN METERS UNLESS OTHERWISE SHOWN

L-1

DATE	REVISED BY	DATE REVISED

CALCULATED/DESIGNED BY

CHECKED BY

PROJECT ENGINEER T. T. LAI

STATE OF CALIFORNIA - DEPARTMENT OF TRANSPORTATION

Caltrans PROJECT DEVELOPMENT

DATE PLOTTED => 25-MAY 2007
TIME PLOTTED => 11:51

LAST REVISION 05-23-07

RELATIVE BORDER SCALE IS IN MILLIMETERS 0 20 40 60 80

USERNAME => tlai
DGN FILE => 0120R4 CC075 01.cgc

CU 04251

EA 0120R4

DIST	COUNTY	ROUTE	KILOMETER POST TOTAL PROJECT	SHEET No.	TOTAL SHEETS
04	SF	80	12.6/13.2	2	33

Caltrans Metric

5/25/07
REGISTERED CIVIL ENGINEER

PLANS APPROVAL DATE

The State of California or its officers or agents shall not be responsible for the accuracy or completeness of electronic copies of this plan sheet.

REGISTERED PROFESSIONAL ENGINEER T.T. Lai No. 63630 Exp. 9-30-08 CIVIL STATE OF CALIFORNIA

To get to the Caltrans web site, go to: http://www.dot.ca.gov

ABBREVIATIONS:

ESA ENVIRONMENTALLY SENSITIVE AREA
SCA SPECIAL CONSTRUCTION AREA
ATM AREA TO BE MONITORED DURING CONSTRUCTION

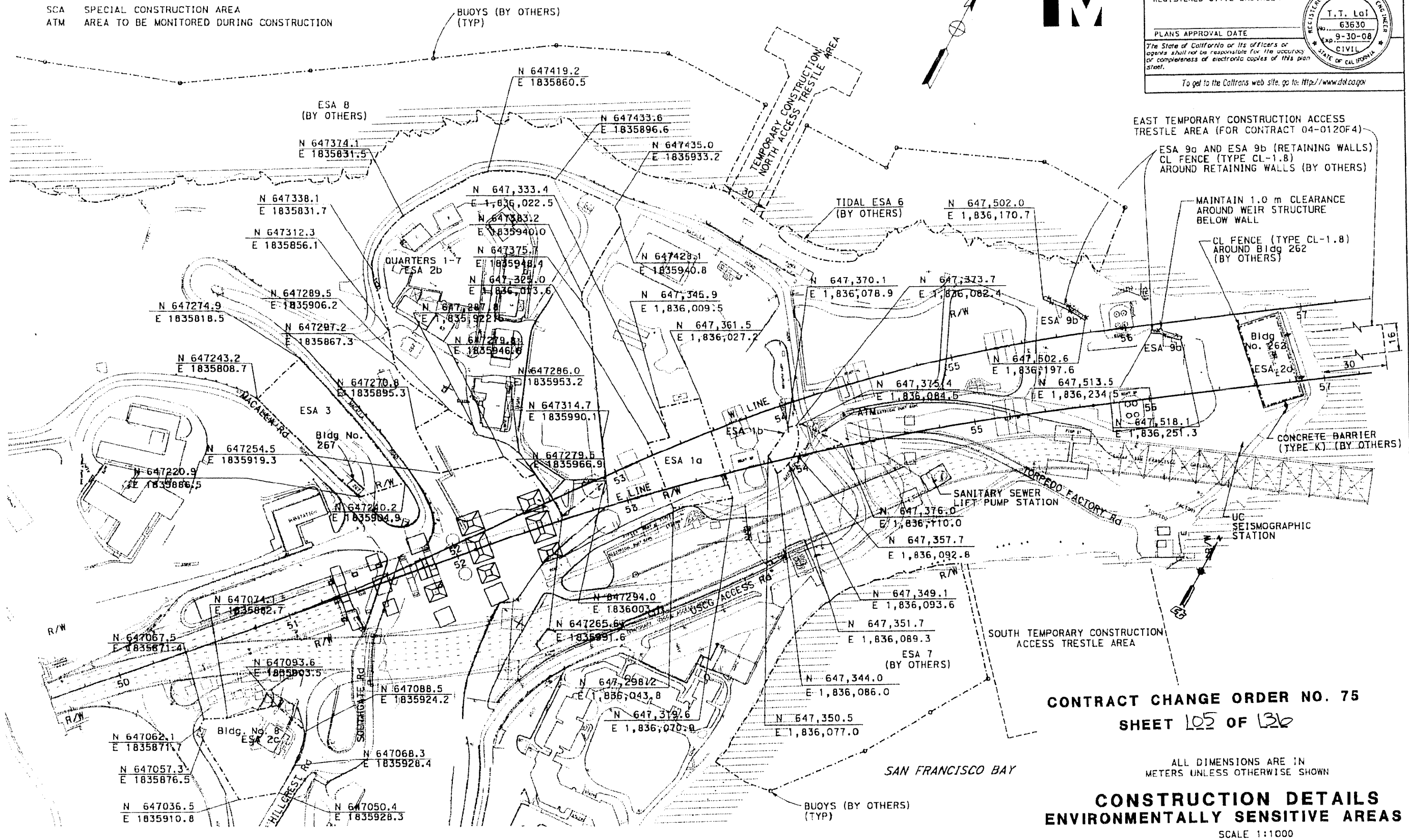

CONTRACT CHANGE ORDER NO. 75
SHEET 105 OF 136

ALL DIMENSIONS ARE IN METERS UNLESS OTHERWISE SHOWN

CONSTRUCTION DETAILS
ENVIRONMENTALLY SENSITIVE AREAS

SCALE 1:1000

C-1

STATE OF CALIFORNIA - DEPARTMENT OF TRANSPORTATION
Caltrans PROJECT DEVELOPMENT

PROJECT ENGINEER T. T. LAI

CALCULATED/DESIGNED BY JK DATE 10/03 REVISED BY A
CHECKED BY EPJ 11/03 DATE REVISED A

LAST REVISION 03-07-07 DATE PLOTTED => 03-APR-2007 TIME PLOTTED => 13:47

RELATIVE BORDER SCALE IS IN MILLIMETERS 0 20 40 60 80

USERNAME => jmercado DGN FILE => 40120rga001.dgn

CU 04251 EA 0120R4

DIST	COUNTY	ROUTE	KILOMETER POST TOTAL PROJECT	SHEET No	TOTAL SHEETS
04	SF	80	12.6/13.2	3	33

Caltrans Metric

REGISTERED CIVIL ENGINEER 5/25/07

PLANS APPROVAL DATE

T. T. Lai No. 63630 EXP. 9-30-08 CIVIL — REGISTERED PROFESSIONAL ENGINEER — STATE OF CALIFORNIA

The State of California or its officers or agents shall not be responsible for the accuracy or completeness of electronic copies of this plan sheet.

To get to the Caltrans web site, go to: http://www.dot.ca.gov

LEGEND:

- Contract No. 04-0120R4 CCO
- Contract No. 04-0120R4
- Contract No. 04-0120F4
- Contract No. 04-0120E4
- Contract Overlap

San Francisco Bay

Temporary Construction Trestle Area

Macalla Rd

SAN FRANCISCO

N 647472.189 E 1835981.498
N 647459.388 E 1835938.947
N 647428.825 E 1836042.670
N 647439.763 E 1836042.267
N 647468.199 E 1836042.024
N 647418.146 E 1836058.523
N 647433.701 E 1836093.480
N 647406.757 E 1836119.951
N 647459.683 E 1836151.870
N 647,261.910 E 1,836,441.519
N 647445.797 E 1836163.152
N 647,244.728 E 1,836,479.604

Area EF
Area CE
Area FP
Area FPR
Area PR

N 647356.320 E 1835963.796
N 647418.996 E 1836050.163
N 647329.768 E 1835935.343
N 647298.082 E 1835947.930
N 647397.317 E 1836039.355
N 647384.250 E 1836046.502
N 647267.194 E 1835868.932
N 647253.640 E 1835856.785
N 647299.891 E 1835912.061
N 647224.852 E 1835873.400
N 647233.747 E 1835839.728
N 647225.270 E 1835831.819
N 647214.028 E 1835871.676
N 647188.338 E 1835880.211
N 647318.961 E 1835988.645
N 647301.313 E 1835998.220
N 647286.430 E 1835938.232
N 647283.771 E 1835926.231
N 647259.286 E 1835888.422
N 647246.955 E 1835880.203
N 647040.953 E 1835774.281
N 647156.406 E 1835837.797
N 647089.577 E 1835778.637
N 647148.984 E 1835846.072
N 647364.147 E 1836067.035
N 647365.098 E 1836075.067
55+76.72 W LINE
55+97.551
N 647403.108 E 1836209.073
56+6.38
N 647443.736 E 1836246.954
N 647463.559 E 1836304.745
N 647490.918 E 1836344.363
N 647,154.07 E 1,836,460.172
N 647,149.905 E 1,836,487.282
N 647 393 E 1 836 296
N 647324.953 E 1836125.222
N 647302.328 E 1836151.573
N 647310.015 E 1836108.519
N 647292.375 E 1836141.828
N 647299.801 E 1836132.719
USB 647304.500 E 1836014.474
N 647238.801 E 1836081.377
N 647233.712 E 1836137.734
N 647232.052 E 1836075.066
N 647240.839 E 1836137.313
N 647180.931 E 1836016.001
N 647149.335 E 1836022.479
N 647136.610 E 1836023.142
N 647127.760 E 1836026.432
N 647137.594 E 1835960.520
N 647102.489 E 1835966.362
N 647114.278 E 1835930.645
N 647077.201 E 1835960.874
N 647067.857 E 1835942.503
N 647064.053 E 1835937.499
N 647036.748 E 1835942.423
N 647024.012 E 1835935.558
N 646997.538 E 1835939.535
N 646968.180 E 1835938.464
N 647018.431 E 1835829.636
N 647019 E 1835801
N 647038.228 E 1835818.440
N 647046.024 E 1835834.404
N 647038.332 E 1835867.328
N 647012.025 E 1835897.278
N 647003.652 E 1835906.503
N 646968.190 E 1835917.107
N 647393.581 E 1836407.438
N 647346.444 E 1836330.201
N 647399.581 E 1836407.438

Yerba Buena Island

Torpedo Factory Rd

USCG Access Rd

Hillcrest Rd

EDR1 LINE
WDR1 LINE
EDL1 LINE
53 WDL1 LINE

R/W

Temporary Construction Marine Access Trestle Area (04-0120R4)

EX ST ROUTE 80

CONTRACT CHANGE ORDER NO. 75

SHEET 106 OF 136

CONSTRUCTION DETAILS AREAS FOR CONTRACTOR USE

SCALE: 1:1000

C-2

STATE OF CALIFORNIA - DEPARTMENT OF TRANSPORTATION
Caltrans PROJECT DEVELOPMENT

PROJECT ENGINEER: T. T. LAI

CALCULATED/DESIGNED BY
CHECKED BY

DATE	REVISED BY	DATE REVISED

LAST REVISION 05-22-07 | DATE PLOTTED => 25-MAY-2007 | TIME PLOTTED => 11:54

RELATIVE BORDER SCALE IS IN MILLIMETERS 0 20 40 60 80

USERNAME => tlai
DGN FILE => 0120R4 CC075 03.cce

CU 04251 | EA 0120R4

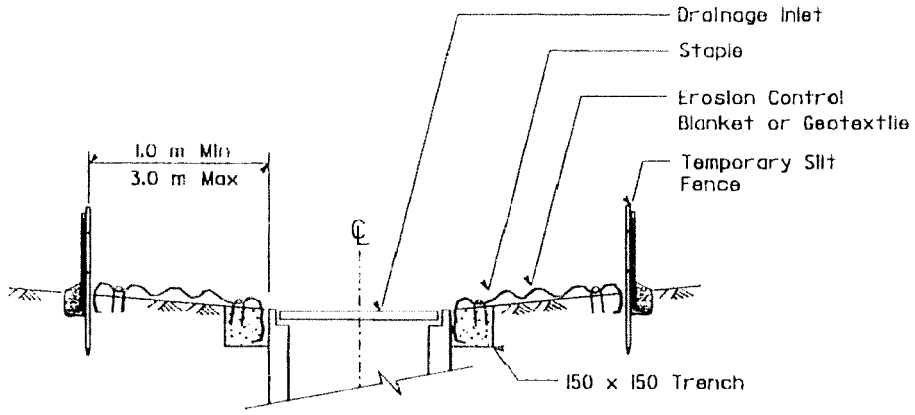

SECTION A-A

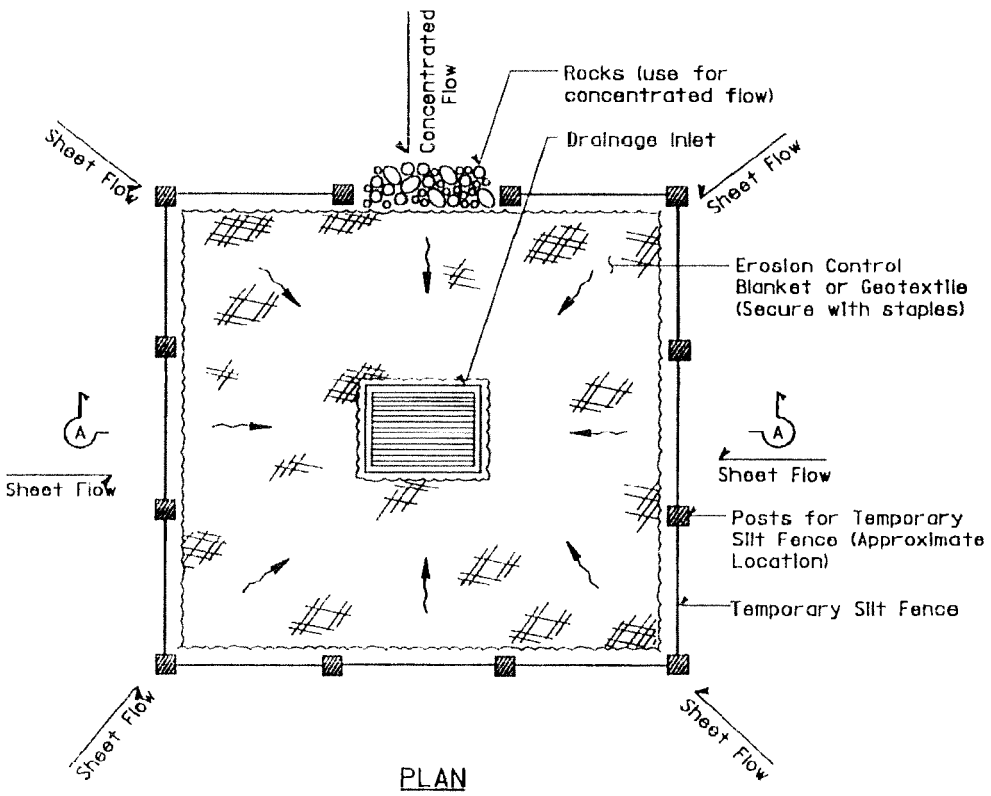

PLAN

TEMPORARY DRAINAGE
INLET PROTECTION (TYPE 1)
(TEMPORARY SILT FENCE)

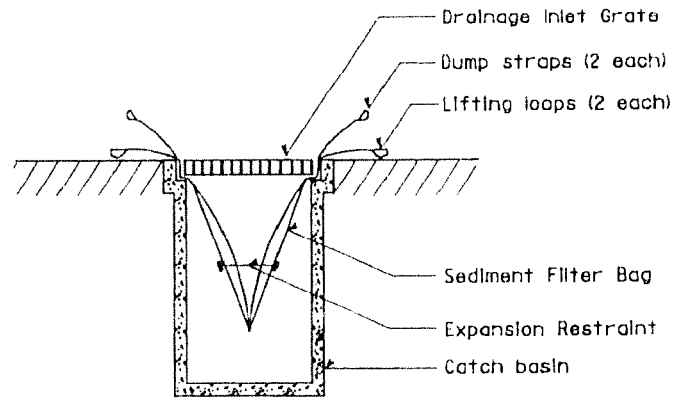

SECTION B-B

SEDIMENT FILTER BAG DETAIL

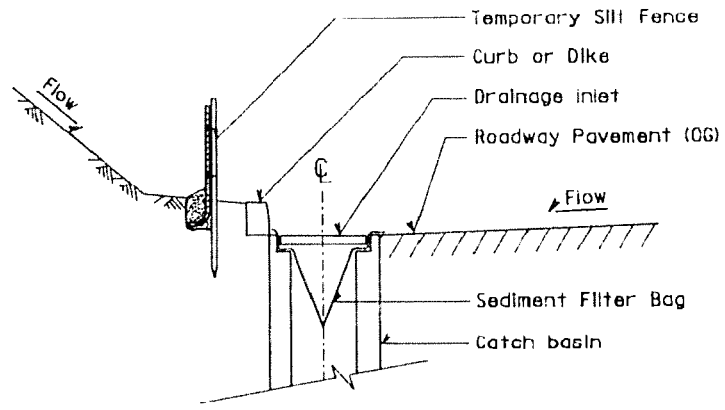

SECTION A-A

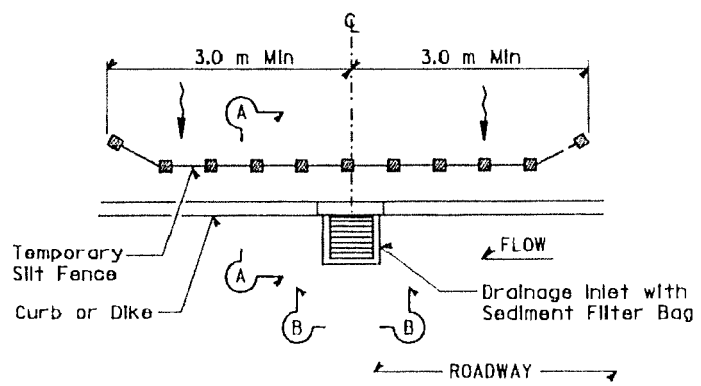

PLAN

TEMPORARY DRAINAGE
INLET PROTECTION (TYPE 5)
(SEDIMENT FILTER BAG)

All dimensions are in millimeters unless otherwise shown

Caltrans Metric

DIST	COUNTY	ROUTE	KILOMETER POST TOTAL PROJECT	SHEET NO	TOTAL SHEETS
04	SF	80	12.6/13.2	4	33

LICENSED LANDSCAPE ARCHITECT

PLANS APPROVAL DATE

The State of California or its officers or agents shall not be responsible for the accuracy or completeness of electronic copies of this plan sheet.

Caltrans now has a web site! To get to the web site, go to: http://www.dot.ca.gov

NOTES

1. Install Temporary Silt Fence by first digging trench, driving posts, placing and securing fabric. Then backfill and tamp.
2. Dimensions may vary to fit field conditions.

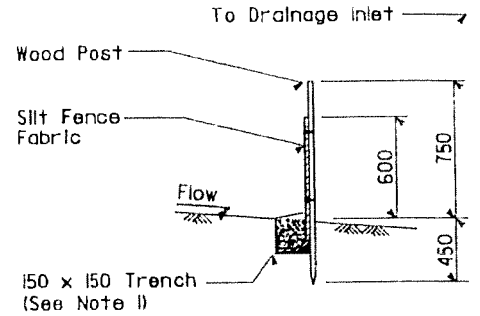

SECTION

TEMPORARY SILT FENCE DETAIL

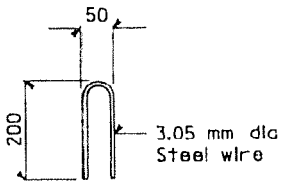

STAPLE DETAIL

CONTRACT CHANGE ORDER NO. 75
SHEET 107 OF 136

WATER POLLUTION CONTROL

NO SCALE WPC-1

STATE OF CALIFORNIA - DEPARTMENT OF TRANSPORTATION
Caltrans
WATER QUALITY
PROJECT LANDSCAPE ARCHITECT
LAURIE SMITH
CALCULATED/DESIGNED BY
CHECKED BY CP 11/06 DATE REVISED
REVISED BY DATE

LAST REVISION 05-22-07 DATE PLOTTED => 25 MAY 2007 TIME PLOTTED => 10:02

FOR REDUCED PLANS ORIGINAL 0 20 40 60 80 SCALE IS IN MILLIMETERS
USERNAME => tigi
DGN FILE => 0120R4gc001.dgn
CU 04343
EA 0120R4

DIST	COUNTY	ROUTE	KILOMETER POST TOTAL PROJECT	SHEET No	TOTAL SHEETS
04	SF	80	12.6/13.2	5	33

LICENSED LANDSCAPE ARCHITECT

PLANS APPROVAL DATE

The State of California or its officers or agents shall not be responsible for the accuracy or completeness of electronic copies of this plan sheet.

Caltrans now has a web site! To get to the web site, go to: http://www.dot.ca.gov

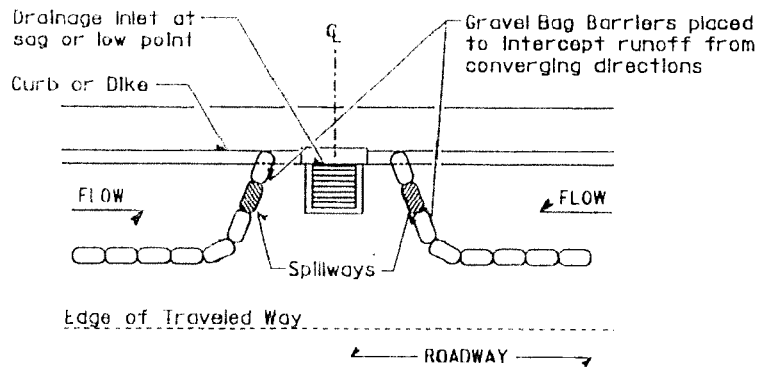

PLAN

CONFIGURATION FOR SAG POINT INLET (GRAVEL BAG BARRIER)

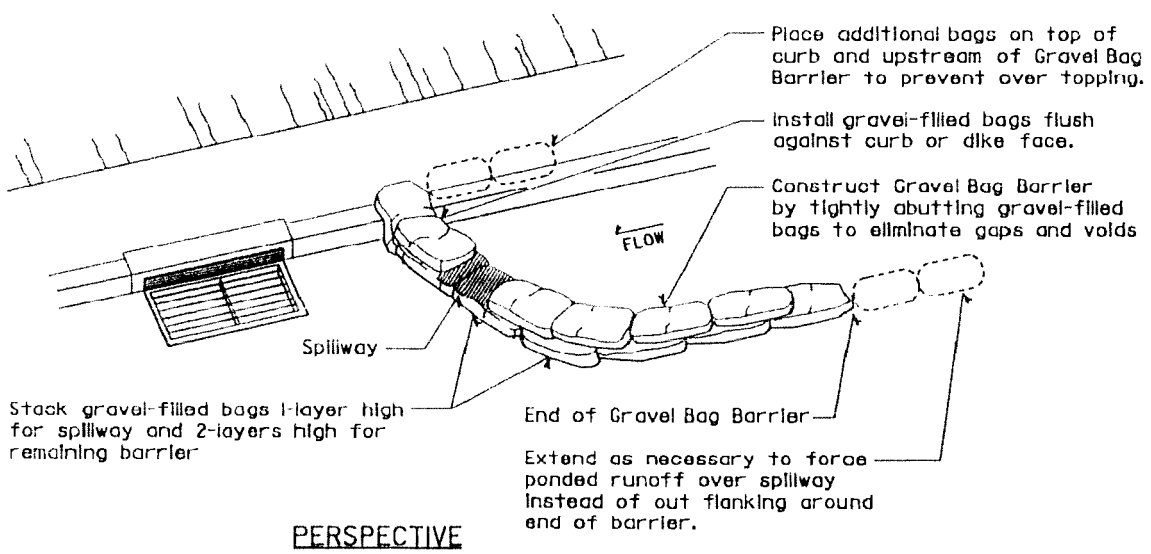

PERSPECTIVE

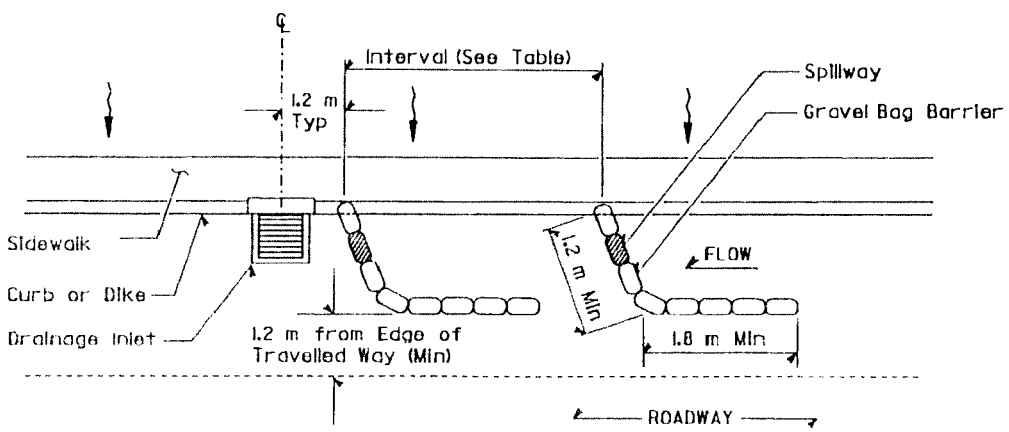

PLAN

TEMPORARY DRAINAGE INLET PROTECTION (TYPE 3A) (GRAVEL BAG BARRIER)

GRAVEL BAG BARRIER (TYPE 3A) SPACING TABLE

SLOPE OF ROADWAY (PERCENT)	1 to 4	4 to 6	6 to 8	8 to 10	10 +
INTERVAL BETWEEN BARRIERS (M)	30.0	22.5	15.0	7.5	4.0

For slope of less than 1%, install barriers only if erosion/sediment is prevalent

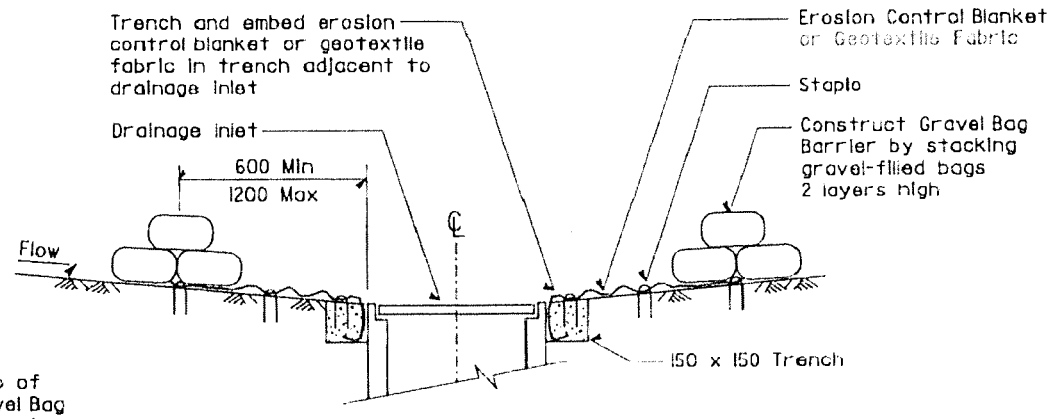

SECTION A-A

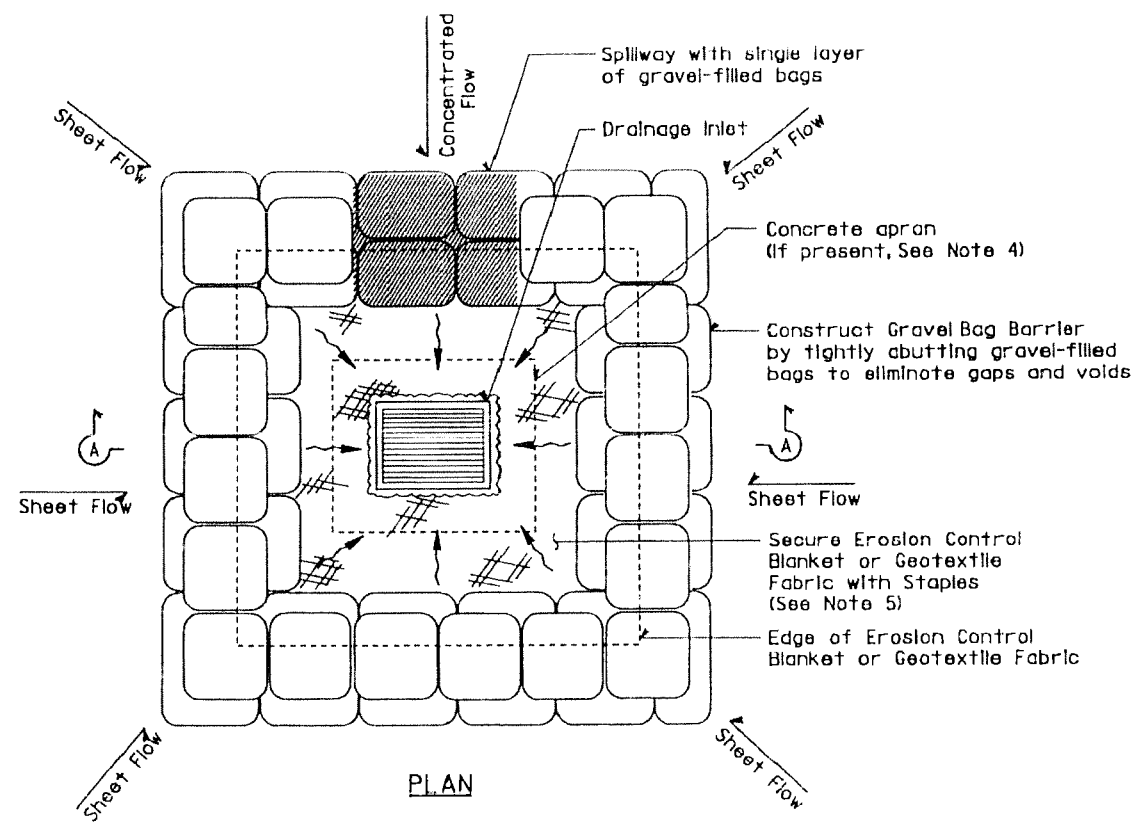

PLAN

TEMPORARY DRAINAGE INLET PROTECTION (TYPE 3B) (GRAVEL BAG BARRIER)

NOTES

1. Place safety cones adjacent to drainage inlet protection.
2. Dimensions may vary to fit field conditions.
3. Install a minimum of 3 gravel bag barriers upstream of each drainage inlet to be protected.
4. Position erosion control blanket or geotextile fabric at edge of concrete apron and secure in trench.
5. Erosion control blanket/geotextile fabric is not required if the area adjacent to the drainage inlet is vegetated or paved.

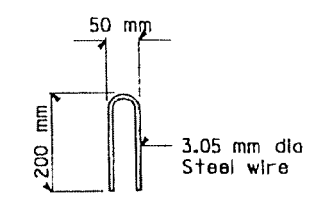

STAPLE DETAIL

All dimensions are in millimeters unless otherwise shown

CONTRACT CHANGE ORDER NO. 75

SHEET 108 OF 136

WATER POLLUTION CONTROL

NO SCALE **WPC-2**

STATE OF CALIFORNIA - DEPARTMENT OF TRANSPORTATION

Caltrans

WATER QUALITY

PROJECT LANDSCAPE ARCHITECT: LAURIE SMITH

CALCULATED/DESIGNED BY: CP | DATE: 11/06 | REVISED BY

CHECKED BY: CP | 11/06 | DATE REVISED

LAST REVISION 05-22-07 | DATE PLOTTED => 25-MAY-2007 | TIME PLOTTED => 10:03

FOR REDUCED PLANS ORIGINAL SCALE IS IN MILLIMETERS 0 20 40 60 80 | USERNAME => tlai | DGN FILE => 0120R4gc002.dgn | CU 04343 | EA 0120R4

DIST	COUNTY	ROUTE	KILOMETER POST TOTAL PROJECT	SHEET No.	TOTAL SHEETS
04	SF	80	12.6/13.2	6	33

LICENSED LANDSCAPE ARCHITECT

PLANS APPROVAL DATE

The State of California or its officers or agents shall not be responsible for the accuracy or completeness of electronic copies of this plan sheet.

Caltrans now has a web site! To get to the web site, go to: http://www.dot.ca.gov

STATE OF CALIFORNIA - DEPARTMENT OF TRANSPORTATION	PROJECT LANDSCAPE ARCHITECT	CALCULATED/ DESIGNED BY	DATE	REVISED BY
Caltrans	LAURIE SMITH	CHECKED BY	CP 11/06	DATE REVISED
WATER QUALITY			CP 11/06	

FOAM BARRIER SPACING TABLE

SLOPE OF ROADWAY (PERCENT)	0 to 1	1 to 2	2 to 3	3 to 4	5 +
INTERVAL BETWEEN BARRIERS (M)	15.24	10.67	9.14	7.62	6.10
ANGLE FROM FACE OF CURB (DEGREES)	70°	70°	70°	45°	45°
SUGGESTED BARRIER LENGTH (M)	1.82	1.82	1.82	1.82	1.82

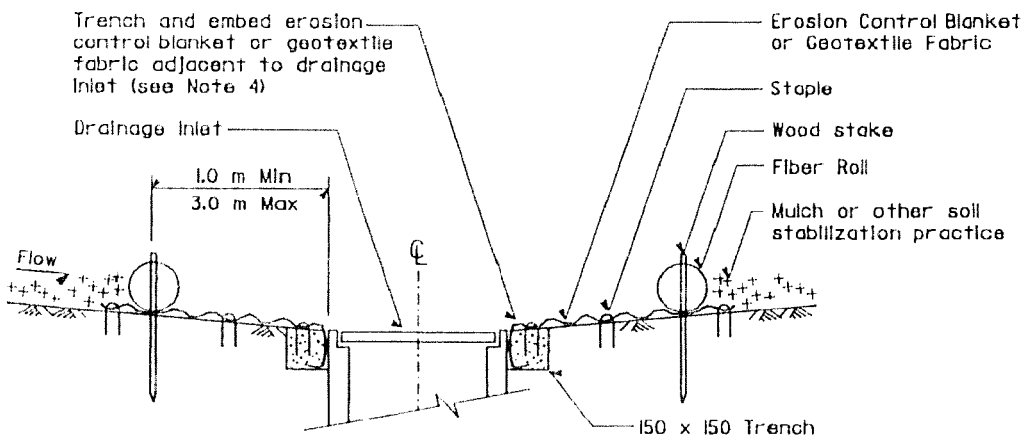

SECTION A-A

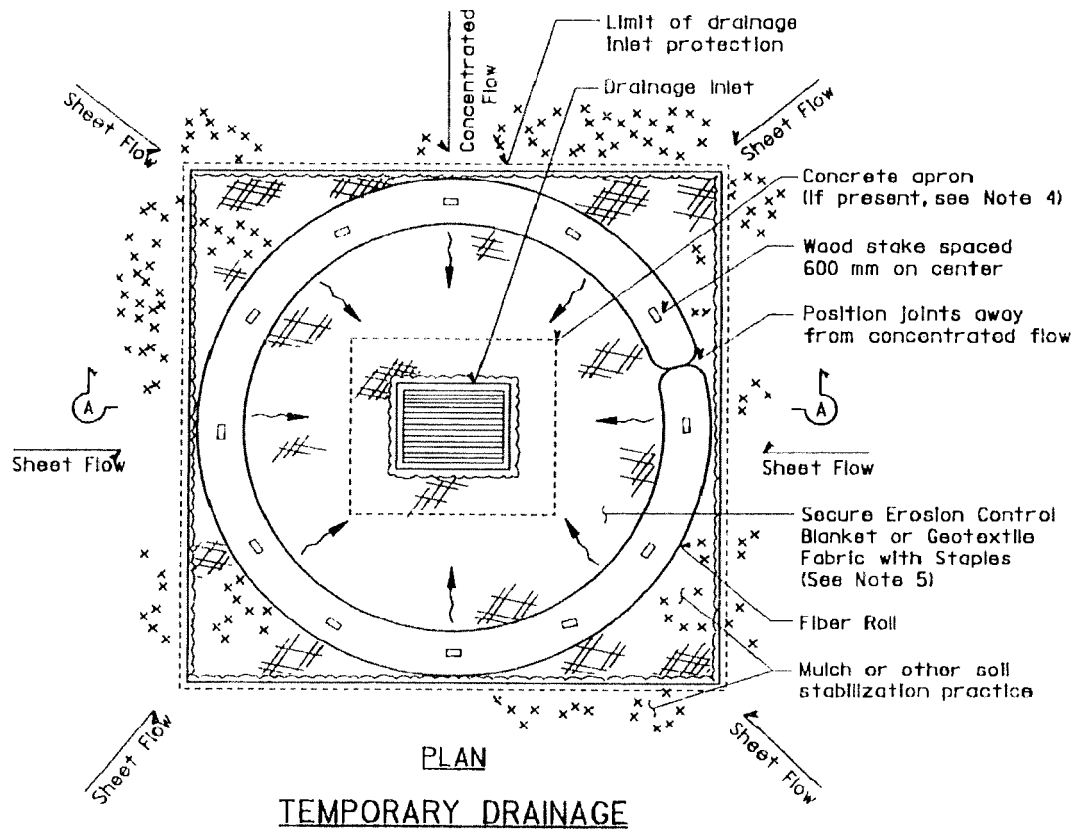

PLAN

TEMPORARY DRAINAGE INLET PROTECTION (TYPE 4A) (FIBER ROLLS)

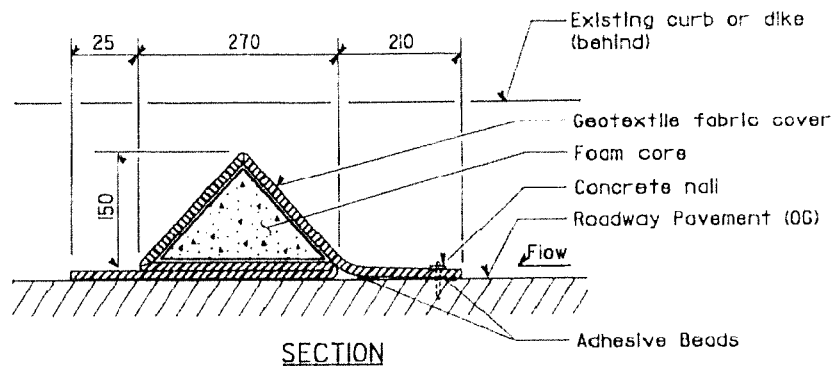

SECTION

FOAM BARRIER DETAIL

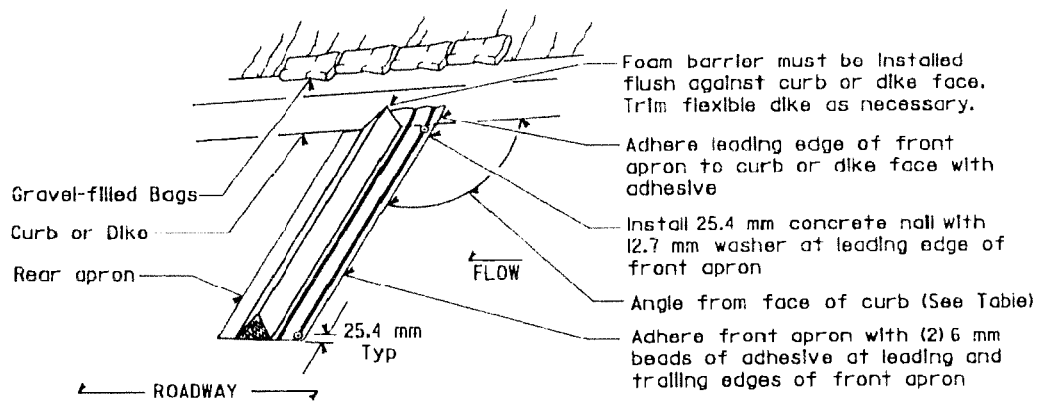

PERSPECTIVE

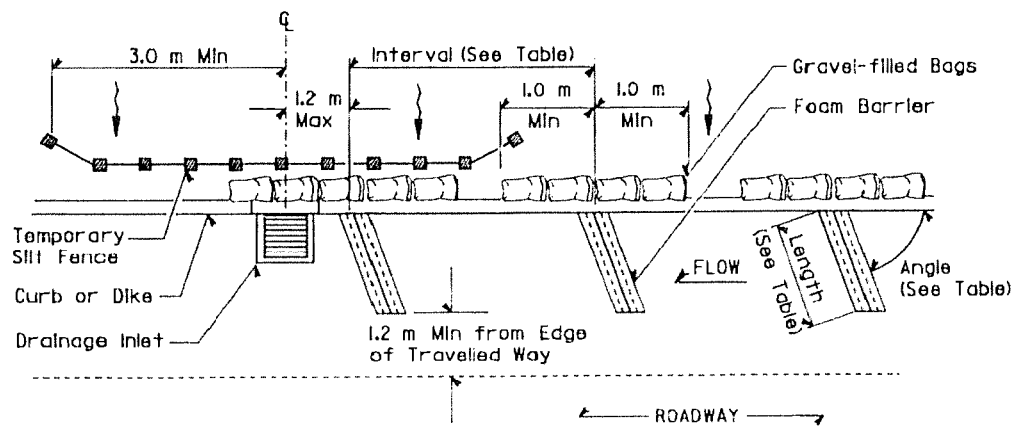

PLAN

TEMPORARY DRAINAGE INLET PROTECTION (TYPE 4B) (FOAM BARRIER)

NOTES

1. Install temporary Silt Fence by first digging trench, driving posts, placing and securing fabric. Then backfill and tamp.
2. Dimensions may vary to fit field conditions.
3. Install a minimum of 3 foam barriers upstream of each drainage inlet to be protected.
4. Position erosion control blanket or geotextile fabric at edge of concrete apron and secure in trench.
5. Erosion control blanket/geotextile fabric is not required if the area adjacent to the drainage inlet is vegetated.

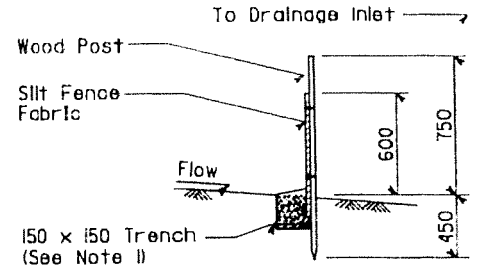

SECTION

TEMPORARY SILT FENCE DETAIL

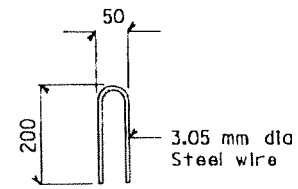

STAPLE DETAIL

All dimensions are in millimeters unless otherwise shown

CONTRACT CHANGE ORDER NO. 75

SHEET 109 OF 136

WATER POLLUTION CONTROL

NO SCALE **WCP-3**

LAST REVISION	DATE PLOTTED => 25-MAY-2007
05-22-07	TIME PLOTTED => 10:04

FOR REDUCED PLANS ORIGINAL SCALE IS IN MILLIMETERS 0 20 40 60 80

USERNAME => rlgi
DGN FILE => 0120R4gc003.dgn

CU 04343 EA 0120R4

DIST	COUNTY	ROUTE	KILOMETER POST TOTAL PROJECT	SHEET No	TOTAL SHEETS
04	SF	80	12.6/13.2	7	33

LICENSED LANDSCAPE ARCHITECT

PLANS APPROVAL DATE

The State of California or its officers or agents shall not be responsible for the accuracy or completeness of electronic copies of this plan sheet.

Caltrans now has a web site! To get to the web site, go to: http://www.dot.ca.gov

Caltrans Metric

EROSION CONTROL LEGEND

EROSION CONTROL (TYPE 'B')

FIBER ROLLS

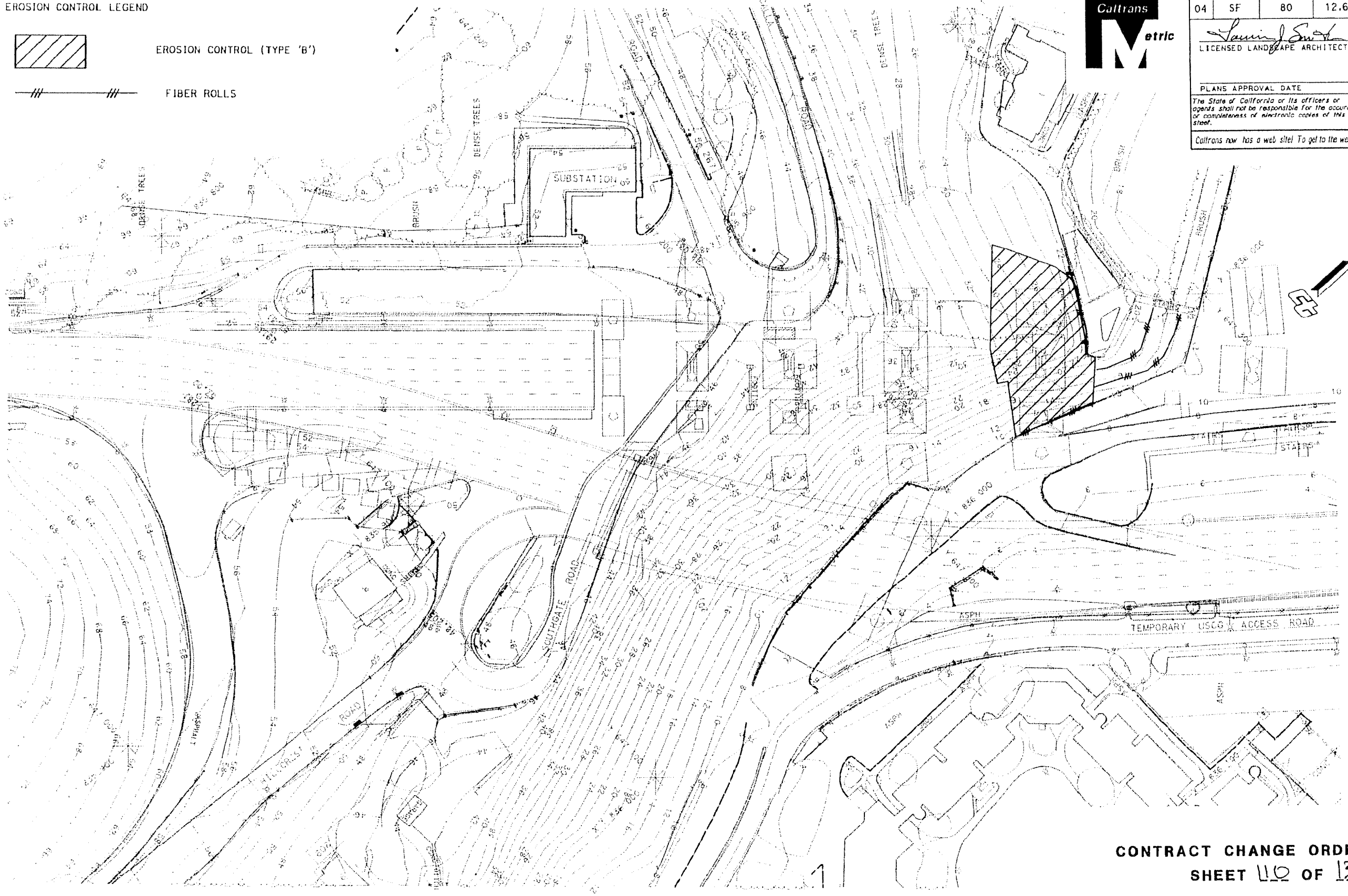

All dimensions are in millimeters unless otherwise shown

CONTRACT CHANGE ORDER NO. 75

SHEET 110 OF 136

EROSION CONTROL PLAN

SCALE: 1:500

EC-1

STATE OF CALIFORNIA - DEPARTMENT OF TRANSPORTATION

Caltrans

WATER QUALITY

PROJECT LANDSCAPE ARCHITECT: LAURIE SMITH

CALCULATED/DESIGNED BY: CP | DATE: 11/06 | REVISED BY

CHECKED BY: CP | 11/06 | DATE REVISED

LAST REVISION 05-22-07 | DATE PLOTTED => 25-MAY-2007 | TIME PLOTTED => 10:07

FOR REDUCED PLANS ORIGINAL SCALE IS IN MILLIMETERS 0 20 40 60 80

USERNAME => tlq1
DGN FILE => 0120R4ge001.dgn

CU 04343

EA 0120R4

Dist	COUNTY	ROUTE	POST MILES TOTAL PROJECT	SHEET No.	TOTAL SHEETS
04	SF	80	12.6/13.2	8	33

LICENSED LANDSCAPE ARCHITECT

PLANS APPROVAL DATE

THE STATE OF CALIFORNIA OR ITS OFFICERS OR AGENTS SHALL NOT BE RESPONSIBLE FOR THE ACCURACY OR COMPLETENESS OF ELECTRONIC COPIES OF THIS PLAN SHEET.

LICENSED LANDSCAPE ARCHITECT — LAURIE J. SMITH No. 3548 — 8-11-08 Renewal Date — 5-21-07 Date — STATE OF CALIFORNIA

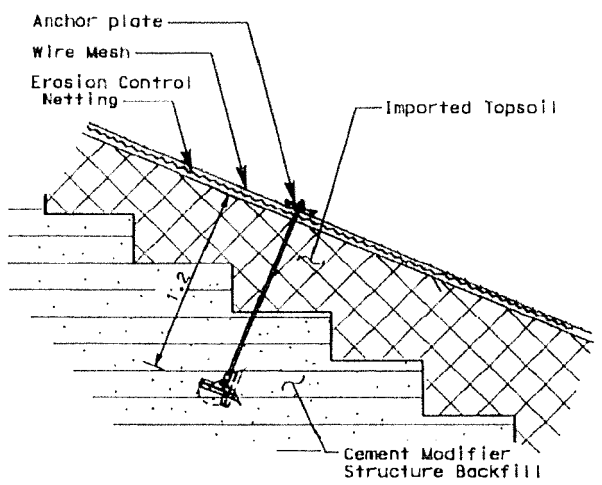

SLOPE ANCHOR DETAIL

NO SCALE

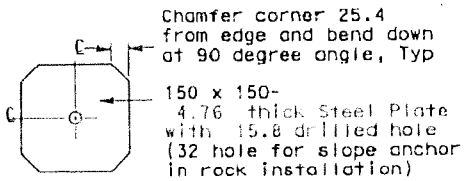

PLAN

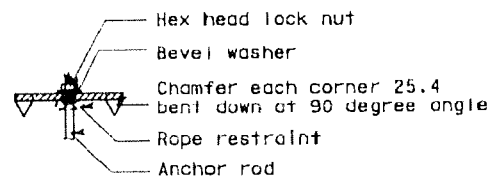

SECTION

ANCHOR PLATE & ASSEMBLY DETAIL

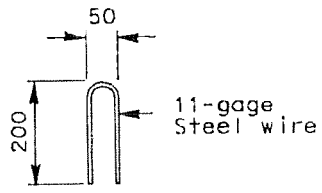

ELEVATION

STAPLE DETAIL

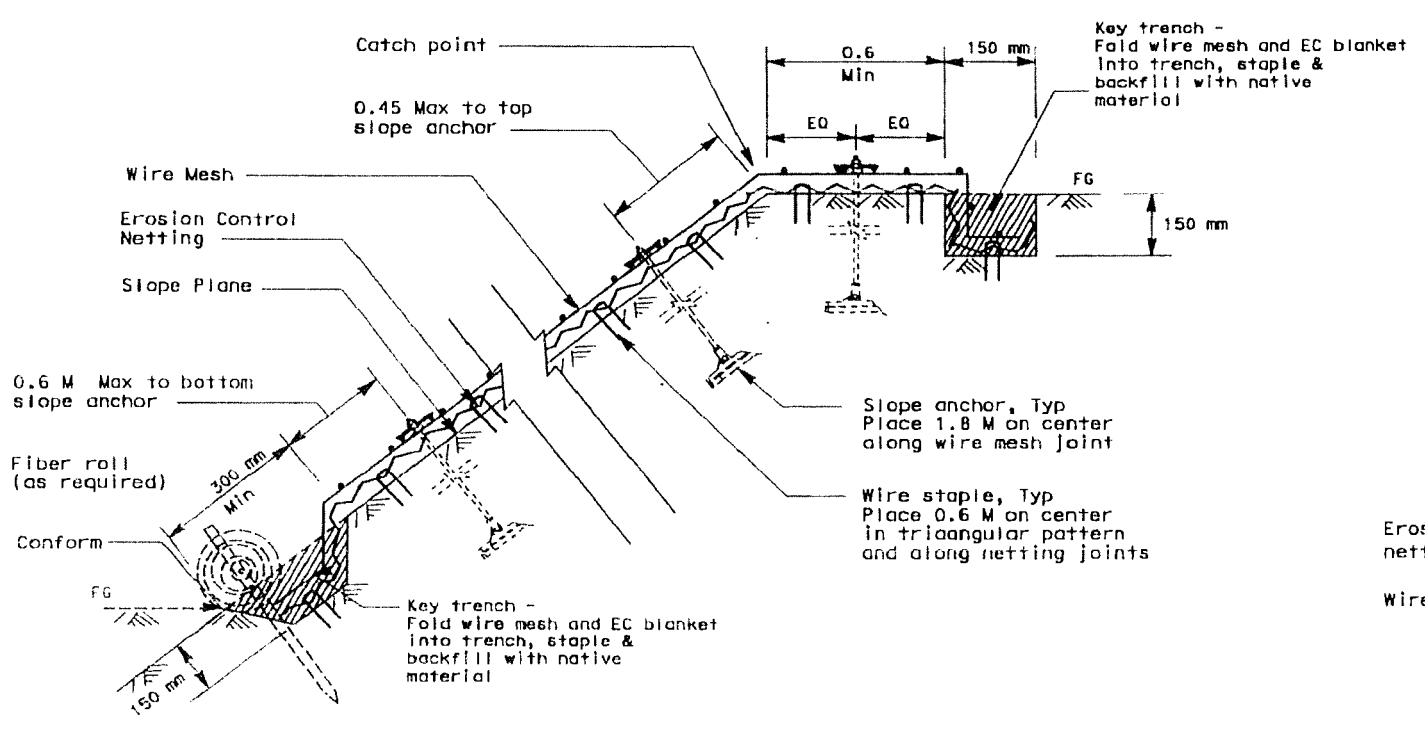

SECTION

EROSION CONTROL (TYPE B)

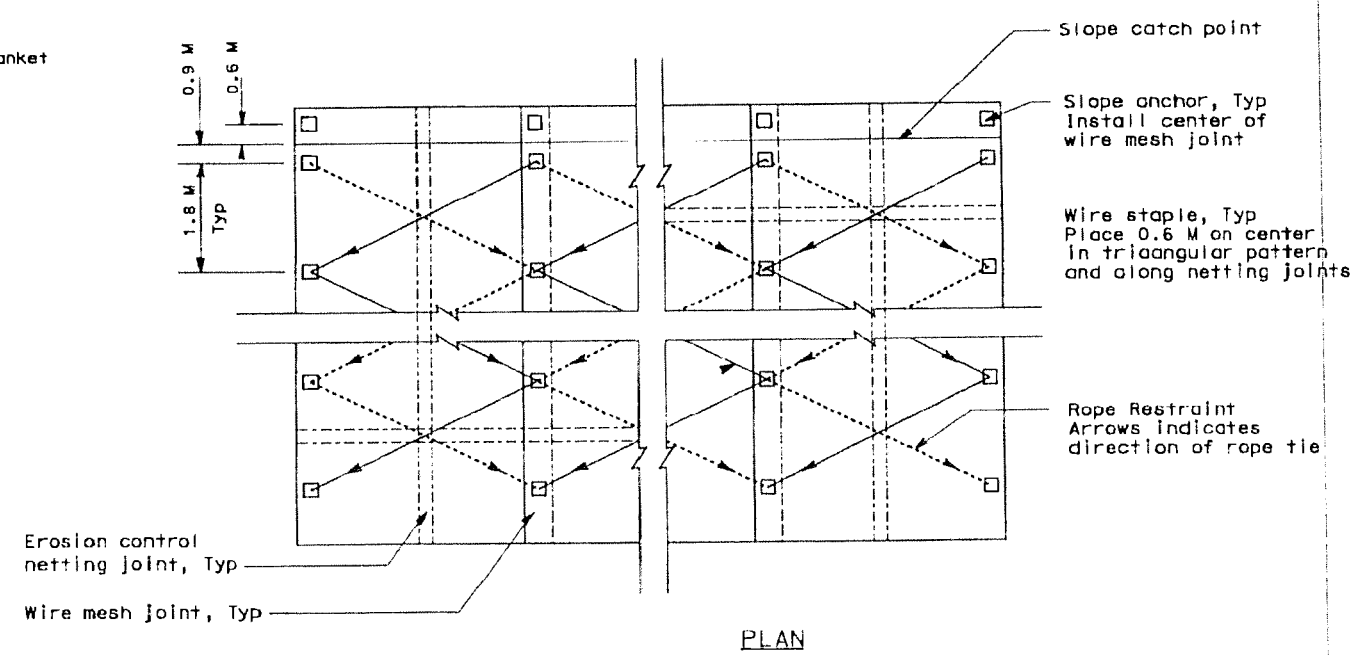

PLAN

SLOPE ANCHOR AND ROPE RESTRAINT PATTERN

CONTRACT CHANGE ORDER NO. 75

SHEET 111 OF 136

ALL DIMENSIONS ARE IN MILLIMETERS UNLESS OTHERWISE SHOWN

EROSION CONTROL DETAILS EC-2

NO SCALE

LAST REVISION 05-22-07 | DATE PLOTTED => 25-MAY-2007 TIME PLOTTED => 10:11

STATE OF CALIFORNIA - DEPARTMENT OF TRANSPORTATION | Caltrans

CALCULATED-DESIGNED BY	CHECKED BY	REVISED BY	DATE REVISED
LAURIE SMITH	LAURIE SMITH		

SENIOR LANDSCAPE ARCHITECT: DAVID YAM

BORDER LAST REVISED 11/1/2006 | RELATIVE BORDER SCALE IS IN INCHES 0 1 2 3 | USERNAME => tial DGN FILE => 0120R4gf002.dgn | CU 04343 | EA 0120R4

DIST	COUNTY	ROUTE	KILOMETER POST TOTAL PROJECT	SHEET NO	TOTAL SHEETS
04	SF	80	12.6/13.2	9	33

LICENSED LANDSCAPE ARCHITECT

PLANS APPROVAL DATE

The State of California or its officers or agents shall not be responsible for the accuracy or completeness of electronic copies of this plan sheet.

Caltrans now has a web site! To get to the web site, go to: http://www.dot.ca.gov

NOTE

1. Fiber roll spacing varies depending upon slope inclination.
2. Installations shown in the perspectives are for slope inclination of 1:10 and steeper.

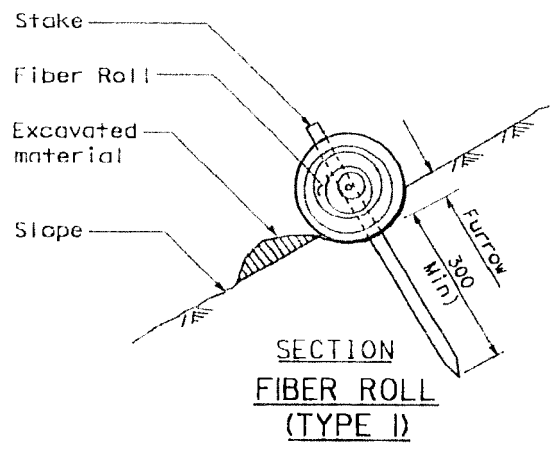

SECTION

FIBER ROLL (TYPE I)

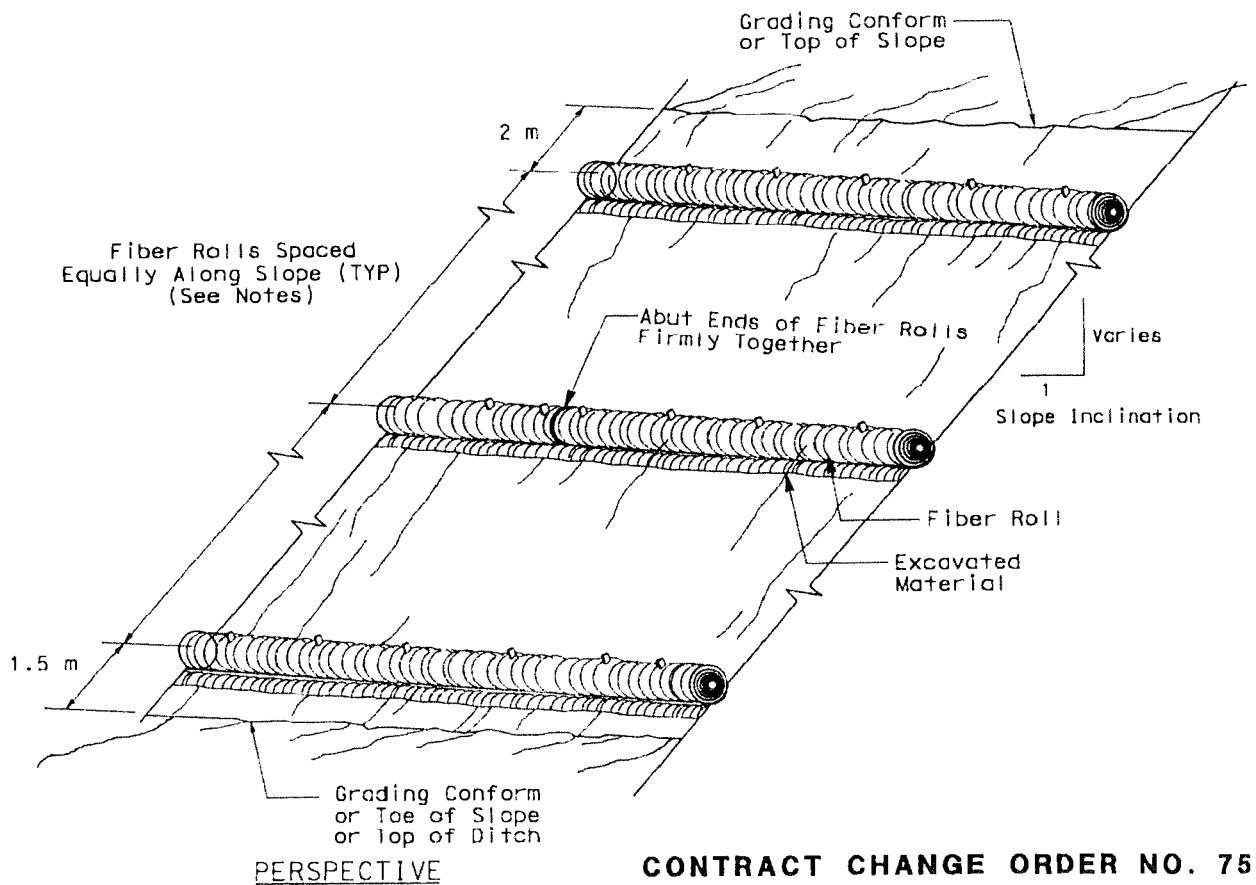

PERSPECTIVE

FIBER ROLL (TYPE I) ON SLOPE

CONTRACT CHANGE ORDER NO. 75

SHEET 112 OF 136

All dimensions are in millimeters unless otherwise shown

EROSION CONTROL DETAIL

NO SCALE **ECD-1**

STATE OF CALIFORNIA - DEPARTMENT OF TRANSPORTATION | PROJECT LANDSCAPE ARCHITECT: LAURIE SMITH | CALCULATED/DESIGNED BY: CP | DATE: 11/06 | REVISED BY: | CHECKED BY: CP | 11/06 | DATE REVISED

Caltrans | WATER QUALITY

LAST REVISION 05-22-07 | DATE PLOTTED => 25-MAY-2007 | TIME PLOTTED => 10:09

FOR REDUCED PLANS ORIGINAL SCALE IS IN MILLIMETERS 0 20 40 60 80 | USERNAME => tiai | DGN FILE => 0120R4gf001.dgn | CU 04343 | EA 0120R4

DIST	COUNTY	ROUTE	KILOMETER POST TOTAL PROJECT	SHEET No	TOTAL SHEETS
04	SF	80	12.6/13.2	10	33

REGISTERED CIVIL ENGINEER

PLANS APPROVAL DATE

REGISTERED PROFESSIONAL ENGINEER Isaac Perez No. 53542 Exp. 6-30-07 CIVIL STATE OF CALIFORNIA

The State of California or its officers or agents shall not be responsible for the accuracy or completeness of electronic copies of this plan sheet.

To get to the Caltrans web site, go to: http://www.dot.ca.gov

Caltrans Metric

ALL DIMENSIONS ARE IN METERS UNLESS OTHERWISE SHOWN

LEGEND

- DRAINAGE SYSTEM NUMBER
- DRAINAGE UNIT LETTER
- ESA
- TCE
- G2M
- DRAINAGE INLET
- P POSITIVE JOINT TYPE
- APC ALTENATIVE PIPE CULVERT
- WSP WELDED STEEL PIPE
- VCP VITRIFIED CLAY PIPE

NOTES:

1. ALL TIES ARE TO THE CENTER OF DRAINAGE STRUCTURE OR PIPES, UNLESS OTHERWISE NOTED.
2. THE INLET FLOW LINES ARE 33 mm HIGHER THAN THE OUTLET FLOW, UNLESS OTHERWISE NOTED.

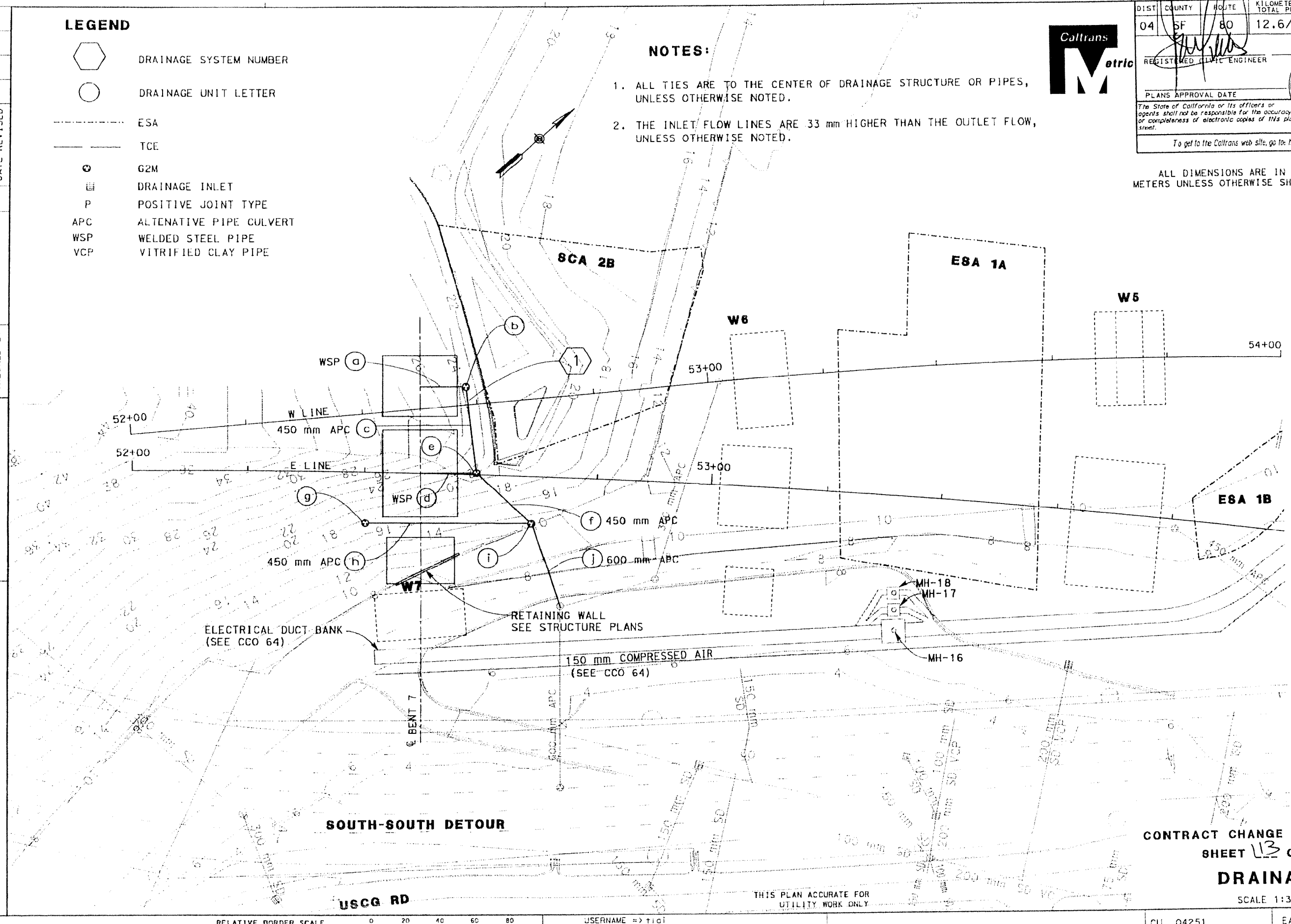

THIS PLAN ACCURATE FOR UTILITY WORK ONLY

CONTRACT CHANGE ORDER No. 75

SHEET 113 OF 136

DRAINAGE

SCALE 1:300

D-1

STATE OF CALIFORNIA - DEPARTMENT OF TRANSPORTATION

Caltrans PROJECT DEVELOPMENT

PROJECT ENGINEER T. T. LAI

CALCULATED/DESIGNED BY | CHECKED BY | DATE | REVISED BY | DATE REVISED

LAST REVISION 05-22-07 | DATE PLOTTED => 25-MAY-2007 | TIME PLOTTED => 11:30

RELATIVE BORDER SCALE IS IN MILLIMETERS 0 20 40 60 80

USERNAME => tlai
DGN FILE => 0120R4 CCO75 10.dgn

CU 04251 | EA 0120R4

DIST	COUNTY	ROUTE	KILOMETER POST TOTAL PROJECT	SHEET No.	TOTAL SHEETS
04	SF	80	12.6/13.2	11	33

REGISTERED CIVIL ENGINEER

PLANS APPROVAL DATE

REGISTERED PROFESSIONAL ENGINEER Isaac Perez No. 53542 Exp. 6-30-07 CIVIL STATE OF CALIFORNIA

The State of California or its officers or agents shall not be responsible for the accuracy or completeness of electronic copies of this plan sheet.

To get to the Caltrans web site, go to: http://www.dot.ca.gov

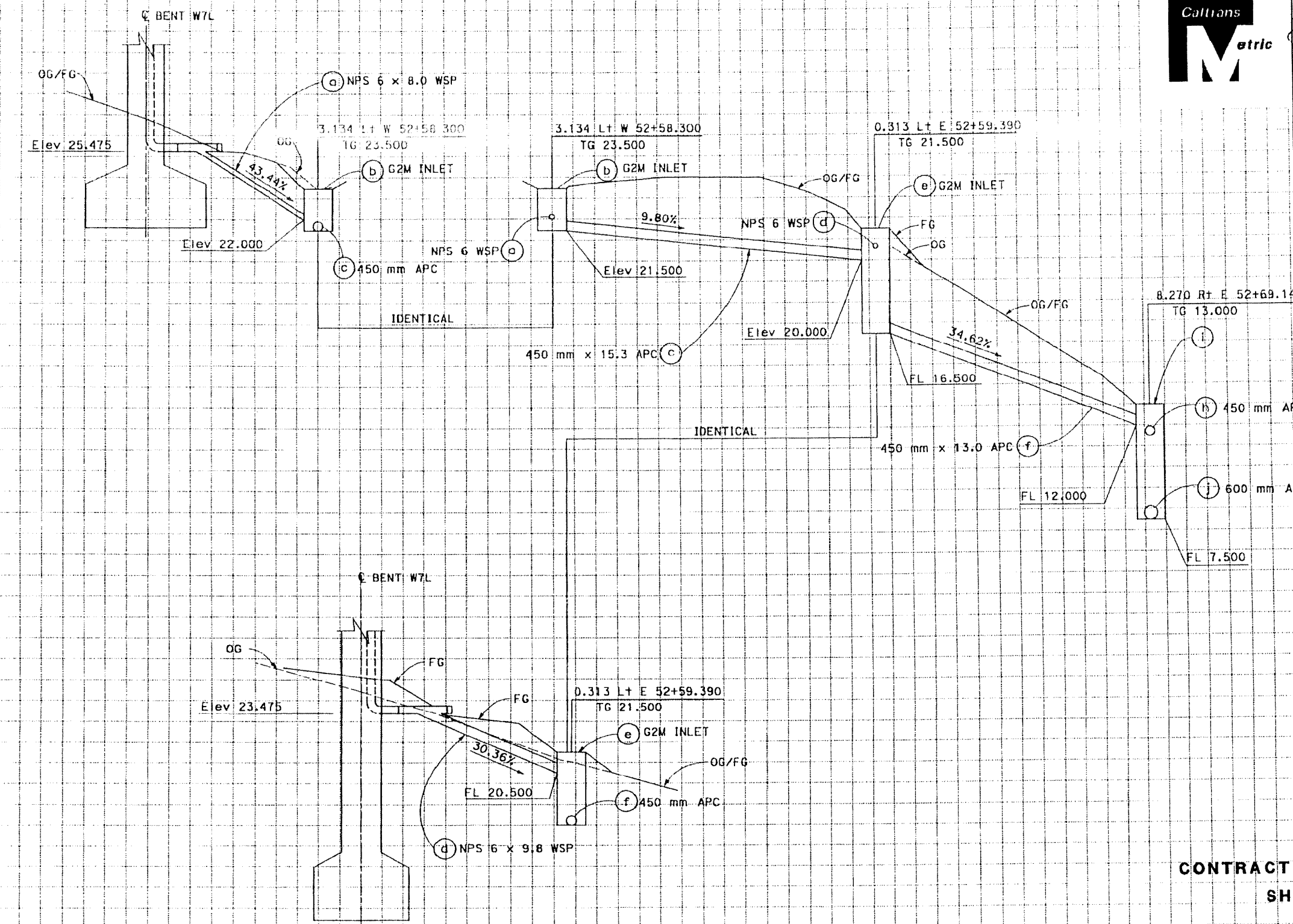

DRAINAGE SYSTEM No. 1

CONTRACT CHANGE ORDER NO. 75

SHEET 114 OF 136

ALL DIMENSIONS ARE IN METERS UNLESS OTHERWISE SHOWN

DRAINAGE PROFILES

SCALE HORIZ 1:100 VERT 1:100

DP-1

STATE OF CALIFORNIA - DEPARTMENT OF TRANSPORTATION

Caltrans PROJECT DEVELOPMENT

PROJECT ENGINEER T. TA LAI

CALCULATED/DESIGNED BY | CHECKED BY | DATE REVISED BY A | DATE REVISED A

Station | m³ Exc | Emb

RELATIVE BORDER SCALE IS IN MILLIMETERS 0 20 40 60 80

USERNAME => tlai DGN FILE => 40120rib001.dgn

CU 04251 | EA 0120R4

LAST REVISION 03-30-07 DATE PLOTTED => 25-MAY-2007 TIME PLOTTED => 10:15

D:\0120S1-191 1\ADVANCE VBI (CCO 75)\40120rib001.dgn

DIST	COUNTY	ROUTE	KILOMETER POST TOTAL PROJECT	SHEET No.	TOTAL SHEETS
04	SF	80	12.6/13.2	12	33

Caltrans Metric

REGISTERED CIVIL ENGINEER

PLANS APPROVAL DATE

REGISTERED PROFESSIONAL ENGINEER Isaac Peroz No. 53542 Exp. 6-30-07 CIVIL STATE OF CALIFORNIA

The State of California or its officers or agents shall not be responsible for the accuracy or completeness of electronic copies of this plan sheet.

To get to the Caltrans web site, go to: http://www.dot.ca.gov

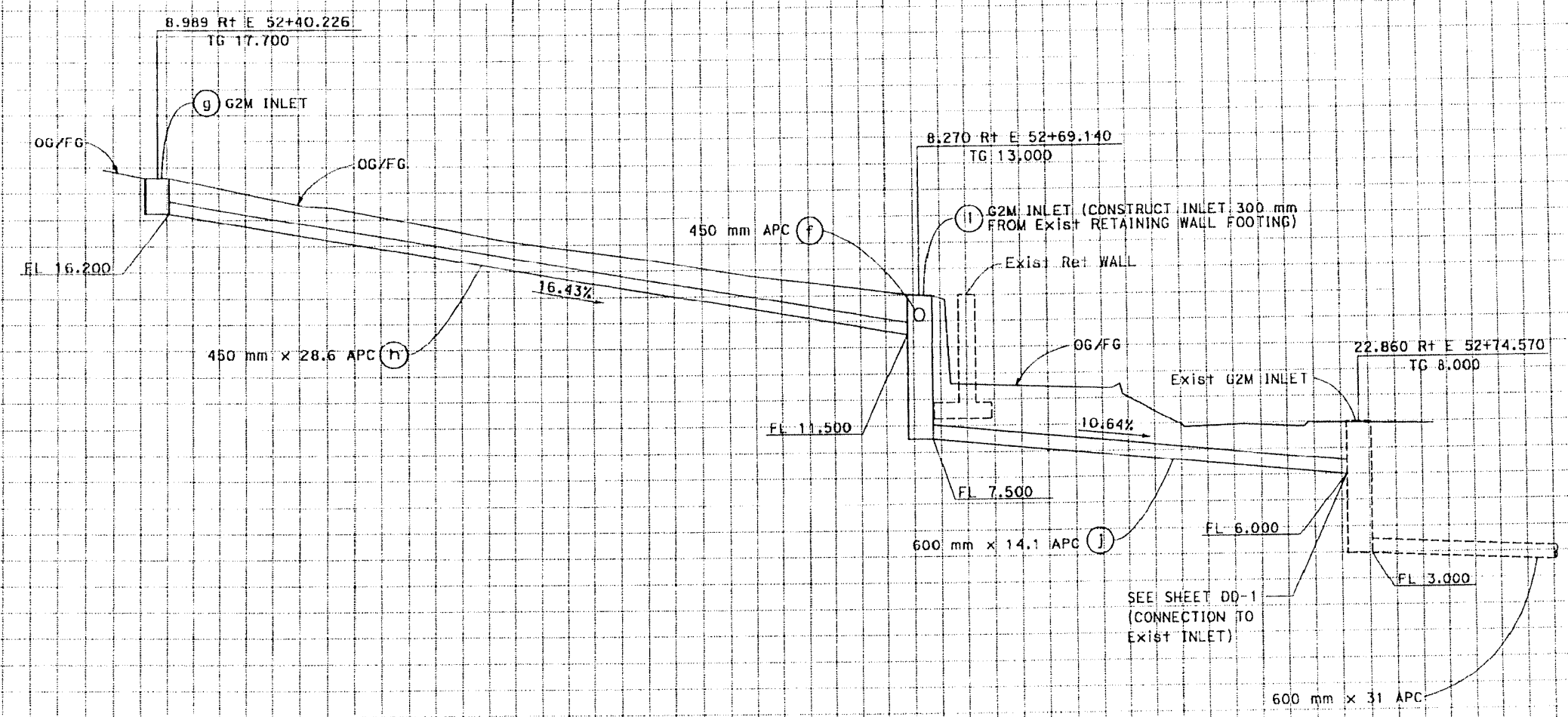

DRAINAGE SYSTEM No. 1

CONTRACT CHANGE ORDER NO. 75

SHEET 115 OF 136

ALL DIMENSIONS ARE IN METERS UNLESS OTHERWISE SHOWN

DRAINAGE PROFILES

SCALE HORIZ 1:100 VERT 1:100

DP-2

STATE OF CALIFORNIA - DEPARTMENT OF TRANSPORTATION

Caltrans

PROJECT ENGINEER T.T. LAI

CALCULATED/DESIGNED BY | CHECKED BY | DATE | REVISED BY | DATE REVISED

Station | Exc | Emb | m³

RELATIVE BORDER SCALE IS IN MILLIMETERS 0 20 40 60 80

USERNAME => ttai DGN FILE => 0120R4 CC075 12.dgn

CU 04251

EA 0120R4

LAST REVISION 05-22-07

DATE PLOTTED => 25-MAY-2007 TIME PLOTTED => 12:06

D:\0120S1-YBI 1\ADVANCE YBI (CCO 75)\0120R4 CC075 12.dgn

DIST	COUNTY	ROUTE	KILOMETER POST TOTAL PROJECT	SHEET NO	TOTAL SHEETS
04	SF	80	12.6/13.2	13	33

REGISTERED CIVIL ENGINEER

PLANS APPROVAL DATE

The State of California or its officers or agents shall not be responsible for the accuracy or completeness of electronic copies of this plan sheet.

To get to the Caltrans web site, go to: http://www.dot.ca.gov

ALTERNATIVE PIPE CULVERTS

RCP	STANDARD TYPE II MODIFIED CEMENT
METALS	14-GAGE (2 mm) BITUMINOUS CORRUGATED STEEL PIPE (CSP); IF BITUMINOUS COATING IS NOT ALLOWED, USE POLYMERIC SHEET COATING FOR 18-GAGE (1.3 mm) CSP.
	1.5 mm CORRUGATED ALUMINIZED PIPE (CAP) OR 1.6 mm CORRUGATED ALUMINIZED STEEL PIPE (CASP).
PLASTIC	PLASTIC PIPE

ABBREVIATIONS:

(N) NOT A SEPERATE PAY ITEM, FOR INFORMATION ONLY

NOTE:

1. ALL JOINTS SHALL BE WATERTIGHT UNLESS OTHERWISE NOTED.

DRAINAGE QUANTITIES

DRAINAGE SYSTEM NO.	DRAINAGE UNIT	REMOVE CULVERT	REMOVE INLET	ABANDON PIPE	APC 300 mm	APC 450 mm	APC 600 mm	AFES 300 mm	AFES 450 mm	AFES 600 mm	150 mm WSP	300 mm PP	PIPE JOINT CLASSIFICATION (N)	FRAME & GRATE (U-45 MANHOLE) (N)	MISCELLANEOUS IRON & STEEL	MINOR CONCRETE (MINOR STRUCTURE)	MINOR CONCRETE (Misc CONSTRUCTION)	HEIGHT OF INLET (N)	MAXIMUM COVER (N)	DESCRIPTION	STATION	DRAINAGE PLAN SHEET No.	DRAINAGE SYSTEM NO.	DRAINAGE UNIT
		m	EA		m			EA			m			EA	Kg	m^3		m						
1	a										8.0		P						1.9	150 mm WELDED STEEL PIPE			1	a
	b													1	200	1.70		2.0		G2M INLET	3.134 Lt W 52+58.300			b
	c					15.3							P						3.0	450 mm ALTERNATIVE PIPE CULVERT				c
	d										9.8		P						1.1	150 mm WELDED STEEL PIPE				d
	e													1	200	6.16		5.0		G2M INLET	0.313 Lt E 52+59.390			e
	f					13.0							P						4.5	450 mm ALTERNATIVE PIPE CULVERT				f
	g													1	200	1.39		1.5		G2M INLET	8.989 Rt E 52+40.226			g
	h					28.6							P						1.0	450 mm ALTERNATIVE PIPE CULVERT				h
	i													1	200	6.73		5.5		G2M INLET	8.270 Rt E 52+69.140			i
	j						14.1						P						5.0	600 mm ALTERNATIVE PIPE CULVERT				j
SHEET TOTAL						56.9	14.1				17.8			4	800	15.98		14.0	16.5					

CONTRACT CHANGE ORDER NO. 75
SHEET 116 OF 136

SHEET TOTAL

DRAINAGE QUANTITIES DQ-1

STATE OF CALIFORNIA - DEPARTMENT OF TRANSPORTATION	PROJECT ENGINEER	CALCULATED/ DESIGNED BY	DATE REVISED
Caltrans PROJECT DEVELOPMENT	T. T. LAI	CHECKED BY	REVISED BY

RELATIVE BORDER SCALE IS IN MILLIMETERS 0 20 40 60 80

USERNAME => tlai
DGN FILE => 0120R4 CC075 13.dgn

CU 04251

EA 0120R4

LAST REVISION 04-03-07

DATE PLOTTED => 25-MAY-2007
TIME PLOTTED => 11:57

DIST	COUNTY	ROUTE	KILOMETER POST TOTAL PROJECT	SHEET No	TOTAL SHEETS
04	SF	80	12.6/13.2	14	33

REGISTERED CIVIL ENGINEER

PLANS APPROVAL DATE

Isaac Perez No. 53542 Exp. 6-30-07 CIVIL — REGISTERED PROFESSIONAL ENGINEER — STATE OF CALIFORNIA

The State of California or its officers or agents shall not be responsible for the accuracy or completeness of electronic copies of this plan sheet.

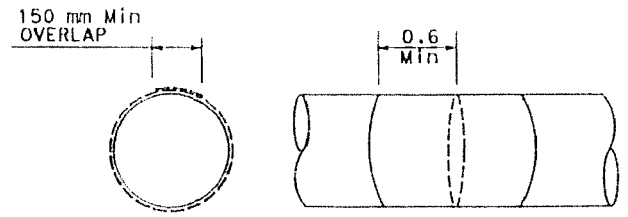

FILTER FABRIC FOR WATERTIGHT JOINTS

NOTE:

FOR PIPES GREATER THAN 600 mm, THE OVERLAP SHALL BE INCREASED TO 300 mm. AN ADDITIONAL 150 mm OVERLAP SHALL BE ADDED FOR EVERY 150 mm PIPE DIAMETER INCREASE ABOVE 300 mm.

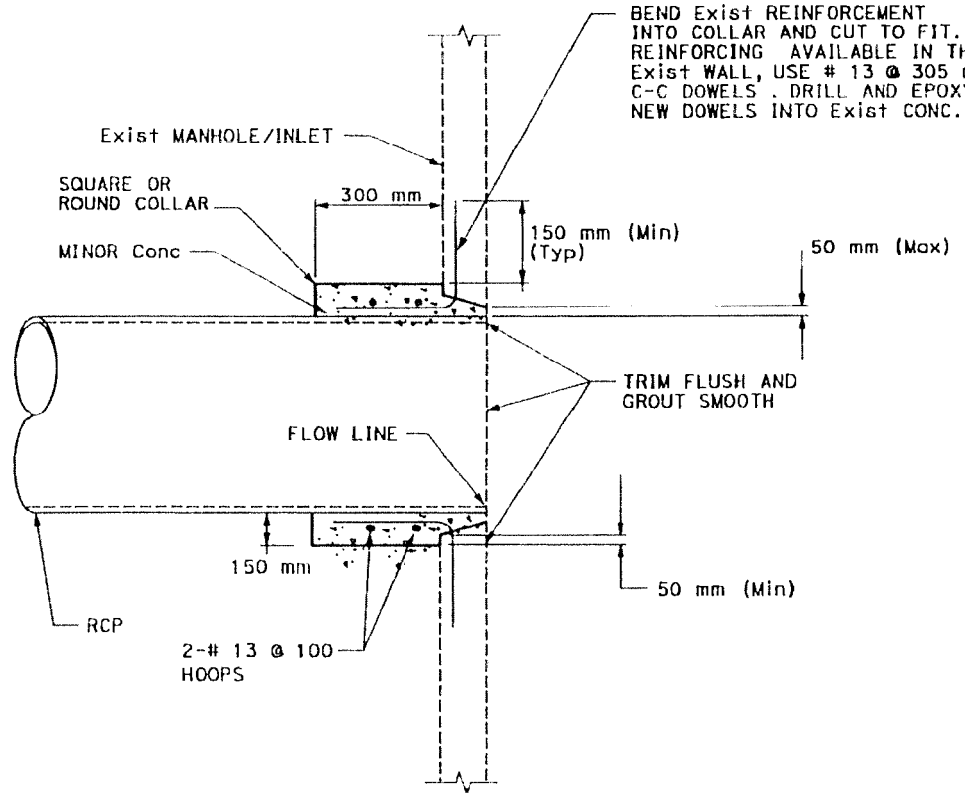

CONCRETE COLLAR PIPE CONNECTION TO EXISTING INLET

NOTES:

1. COVER SHALL BE SUPPLIED WITH BOLTDOWN OR LOCKING DEVICES.
2. FOR DETAILS NOT SHOWN, SEE Std PLAN D73 - G2 INLET.

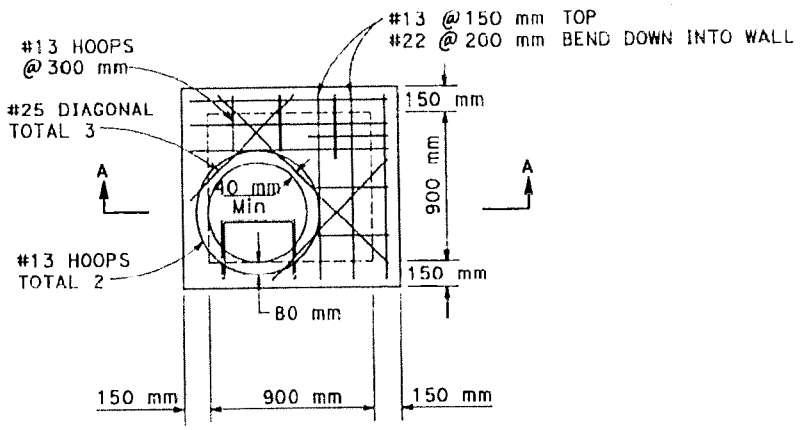

PLAN

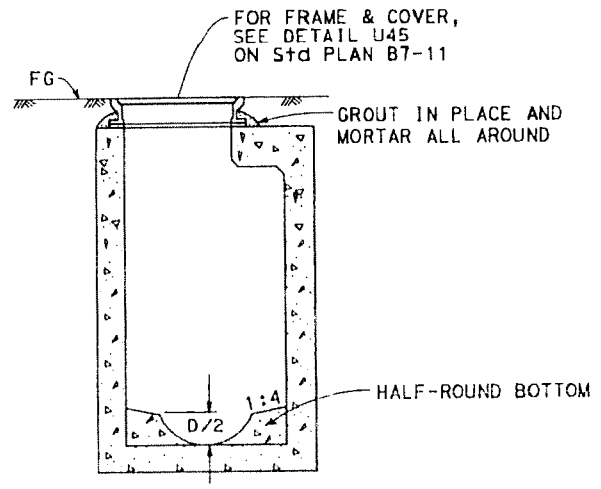

SECTION A-A G2M INLET

CONTRACT CHANGE ORDER NO. 75
SHEET 117 OF 136

DRAINAGE DETAILS

NO SCALE

DD-1

ALL DIMENSIONS ARE IN MILLIMETERS UNLESS OTHERWISE SHOWN

STATE OF CALIFORNIA - DEPARTMENT OF TRANSPORTATION — Caltrans — HYDRAULICS

PROJECT ENGINEER | CALCULATED/DESIGNED BY | CHECKED BY | DATE | REVISED BY | DATE REVISED

LAST REVISION 05-22-07 | DATE PLOTTED => 25-MAY-2007 | TIME PLOTTED => 12:10

FOR REDUCED PLANS ORIGINAL SCALE IS IN MILLIMETERS 0 20 40 60 80

USERNAME => tlai
DGN FILE => 0120R4 CC075 14.dgn

CU 04251 | EA 0120R4

DIST	COUNTY	ROUTE	KILOMETER POST TOTAL PROJECT	SHEET No	TOTAL SHEETS
04	SF	80	12.6/13.2	15	33

Caltrans Metric

REGISTERED CIVIL ENGINEER — 5/22/07

PLANS APPROVAL DATE

REGISTERED PROFESSIONAL ENGINEER — T.T. Lai — No. 63630 — Exp. 9-30-08 — CIVIL — STATE OF CALIFORNIA

The State of California or its officers or agents shall not be responsible for the accuracy or completeness of electronic copies of this plan sheet.

To get to the Caltrans web site, go to: http://www.dot.ca.gov

ABBREVIATIONS

abd	ABANDONED
CA	COMPRESSED AIR
DIP	DUCTILE IRON PIPE
E	ELECTRIC
FA	FIRE ALARM
FM	FORCE MAIN
G	GAS
kV	KILO VOLT
MCI	MCI TELECOMMUNICATIONS
PACBELL	PACIFIC BELL
PH	POTHOLE
SFWD	SAN FRANCISCO WATER DEPARTMENT
SP	SALTWATER PIPE
SS	SANITARY SEWER
ST	STEEL
TCE	TEMPORARY CONSTRUCTION EASEMENT
U	UTILITY
UNK	UNKNOWN
USCG	UNITED STATES COAST GUARD
V	VOLTS
VCP	VITRIFIED CLAY PIPE
W	WATER
CCSF	CITY AND COUNTY OF SAN FRANCISCO
FH	FIRE HYDRANT
OH	OVERHEAD
TOS	CALTRANS TRAFFIC OPERATIONS SYSTEM
UC	UNIVERSITY OF CALIFORNIA
TCE	TEMPORARY CONSTRUCTION EASEMENT
N	NORTHING
E	EASTING
DUCT	DUCT BANK LOCATION CALL OUT
G.I.	GALVENIZED PIPE
W.I.	WROUGHT PIPE

SYMBOLS

- oC CABLE VAULT
- .CO CLEANOUT
- □E ELECTRIC HANDHOLE
- oE ELECTRIC MANHOLE
- ▪ ELECTRIC PULL BOX
- FIRE HYDRANT
- oG GAS VALVE
- LIGHT POLE
- oSW SALTWATER VALVE
- MANHOLE
- STORM DRAIN INLET
- oT TELEPHONE MANHOLE
- □T TELEPHONE VAULT
- UTILITY POLE
- □U UTILITY VAULT
- oW WATER VAULT
- UTILITY SYSTEM
- (X) UTILITY NUMBER
- ABANDON UTILITY
- REMOVE UTILITY
- ENVIRONMENTAL SENSITIVE AREA (ESA)
- D MANUAL LOW POINT DRAIN
- AUTOMATIC AIR RELEASE VALVE
- GATE VALVE (WATER)
- WATER METER
- BACK FLOW PREVENTER ASSEMBLY (BPA)

LEGEND

EXISTING SYMBOL	PROPOSED SYMBOL	UTILITY	OWNERSHIP
sp	SP	SALTWATER PIPE	US NAVY
sd	SD	STORM DRAINAGE	CITY OF SF/CALTRANS
tv	TV	CABLE TELEVISION	US NAVY/AT & T
ca	CA	COMPRESSED AIR	CALTRANS
g	G	GAS LINE	PG & E
w	W	WATER LINE	SFWD
s	S	SEWER LINE	CCSF
t	T	TELEPHONE LINE	SBC
fo	FO	FIBER OPTIC	CALTRANS/SBC
w(r)	W(R)	RECLAIM WATER	CCSF
w(d)	W(D)	DOMESTIC WATER	CALTRANS
e	E	ELECTRICAL	CCSF

NOTES

1. LOCATIONS OF EXISTING UTILITY FACILITIES ON THESE PLANS ARE APPROXIMATE AND SHALL BE VERIFIED BY THE CONTRACTOR PRIOR TO CONSTRUCTION.
2. ELEVATION IS BASED ON 1929 NATIONAL GEODETIC VERTICAL DATUM (NGVD29).
3. CONTRACTOR TO PROTECT UC SEISMOGRAPH STATION.
4. ALL US NAVY OWNED UTILITY LINES ARE UNDER CARE OF CCSF. CONTRACTOR TO CONTACT CCSF REPRESENTATIVE FOR RELOCATION OF ALL NAVY UTILITY LINES
5. USE LONG ELBOWS WHEREVER SPACE PERMITS.

DATE	REVISED BY	DATE REVISED
CALCULATED/ DESIGNED BY		CHECKED BY
PROJECT ENGINEER	T. T. LAI	

STATE OF CALIFORNIA - DEPARTMENT OF TRANSPORTATION

Caltrans PROJECT DEVELOPMENT

CONTRACT CHANGE ORDER NO. 75 **UTILITY PLAN**

SHEET 118 OF 136 **U-1**

LAST REVISION 05-22-07 — DATE PLOTTED => 25-MAY-2007 — TIME PLOTTED => 11:14

RELATIVE BORDER SCALE IS IN MILLIMETERS 0 20 40 60 80

USERNAME => tlai
DGN FILE => 0120R4 CC075 15.cco

CU 04251

EA 0120R4

DIST	COUNTY	ROUTE	KILOMETER POST TOTAL PROJECT	SHEET No	TOTAL SHEETS
04	SF	80	12.6/13.2	16	33

Caltrans Metric

5/22/07
REGISTERED CIVIL ENGINEER

PLANS APPROVAL DATE

Trinh Lai
No. 63630
Exp. 9-30-08
CIVIL
REGISTERED PROFESSIONAL ENGINEER
STATE OF CALIFORNIA

The State of California or its officers or agents shall not be responsible for the accuracy or completeness of electronic copies of this plan sheet.

To get to the Caltrans web site, go to: http://www.dot.ca.gov

DATE	REVISED BY	DATE REVISED

CALCULATED/DESIGNED BY

CHECKED BY

PROJECT ENGINEER
T. T. LAI

STATE OF CALIFORNIA - DEPARTMENT OF TRANSPORTATION
Caltrans PROJECT DEVELOPMENT

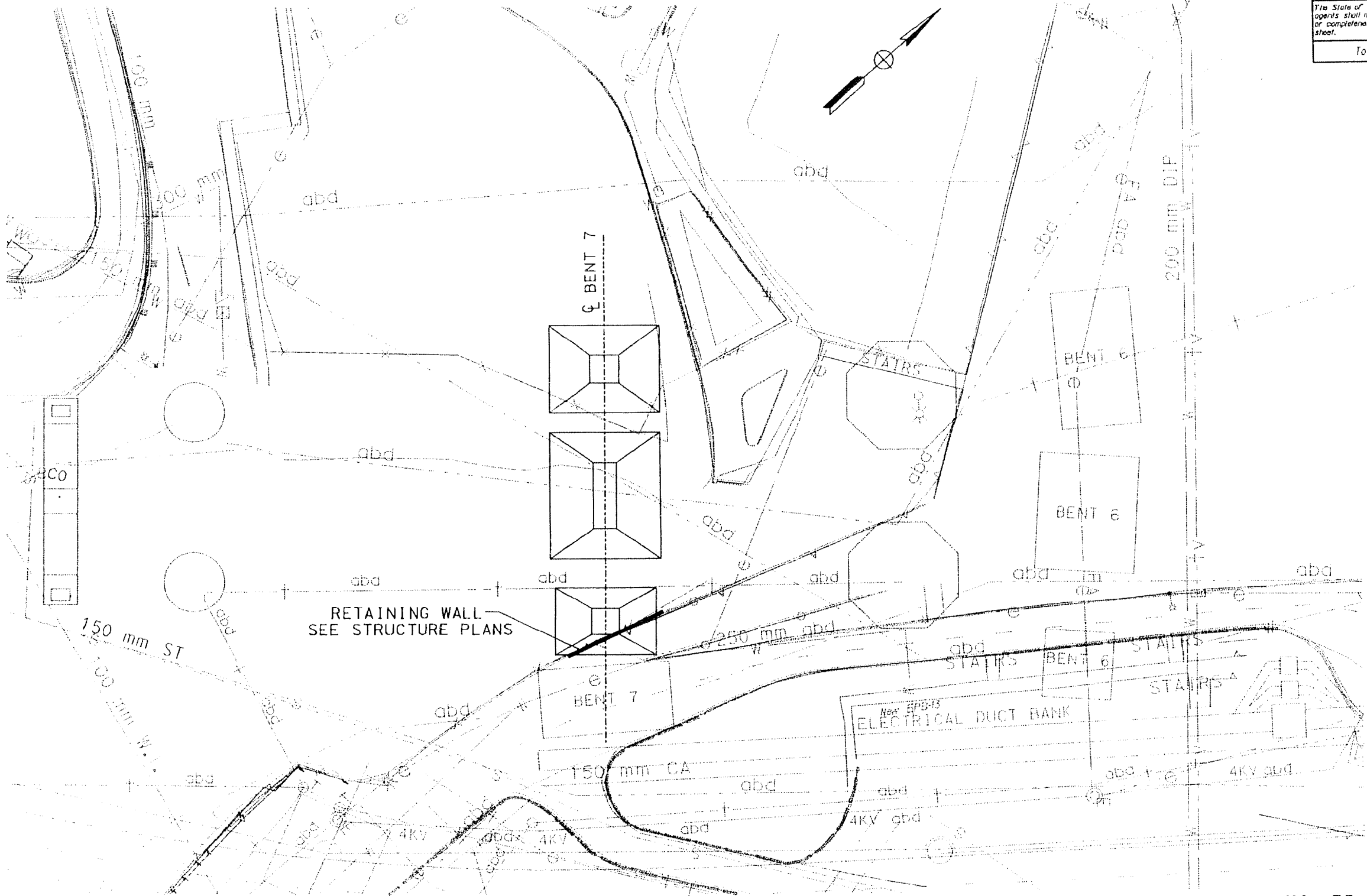

FOR NOTES, ABBREVIATIONS &/OR LEGEND, SEE SHEET U-1

CONTRACT CHANGE ORDER NO. 75
SHEET 129 OF 136

THIS PLAN ACCURATE FOR UTILITY WORK ONLY

ALL DIMENSIONS ARE IN METERS UNLESS OTHERWISE SHOWN

UTILITY PLAN

NO SCALE

U-2

LAST REVISION 05-22-07 | DATE PLOTTED => 25-MAY-2007 | TIME PLOTTED => 10:25

RELATIVE BORDER SCALE IS IN MILLIMETERS 0 20 40 60 80

USERNAME => tlai
DGN FILE => 40120rkc002.dgn

CU 04251

EA 0120R4

DIST.	COUNTY	ROUTE	KILOMETER POST TOTAL PROJECT	SHEET NO.	TOTAL SHEETS
04	SF	80	12.6/13.2	17	33

Caltrans Metric

REGISTERED ENGINEER - CIVIL — A.L. ELY, No. 18880, Exp. 6-30-07, CIVIL, REGISTERED PROFESSIONAL ENGINEER, STATE OF CALIFORNIA

PLANS APPROVAL DATE

The State of California or its officers or agents shall not be responsible for the accuracy or completeness of electronic copies of this plan sheet.

T.Y. LIN / MOFFATT & NICHOL
TWO HARRISON STREET
SAN FRANCISCO, CA 94105

BVC 51+43.753
ELEV 59.069
PIVC 52+59.876
Elev 61.147
PCVC 53+76.000
Elev 59.869
+1.789%
232.247 m VC
Rc=-1.2439%/Sta
-1.100%
℄ WB Rte 80
Profile Grade
PIVC 66+30.000
Elev 46.075
EVC 78+84.000
Elev 21.622
2508.000 m VC
Rc=-0.0339%/Sta
-1.950%

BVC 52+60.000
Elev 51.873
Rc=0.6780%/Sta
200.000 m VC
+0.420%
PIVC 53+60.000
Elev 52.293
PRVC 54+60.000
Elev 54.069
+1.776%
PIVC 55+95.000
Elev 56.466
270.000 m VC
Rc=-1.1107%/Sta
PCVC 57+30.000
Elev 54.815
-1.223%
PIVC 59+62.500
Elev 51.972
465.000 m VC
Rc=-0.0340%/Sta
EVC 61+95.000
Elev 48.762
-1.381%
℄ EB Rte 80
Profile Grade

** Note WB Superstructure is a Cast-in-Place conventionally reinforced concrete box girder from Bent W10AL to Hinge W7LA

PROFILE GRADE
NO SCALE

Note: Work shown in addition to that designated as "Advance Const Work" is for informational purposes only.

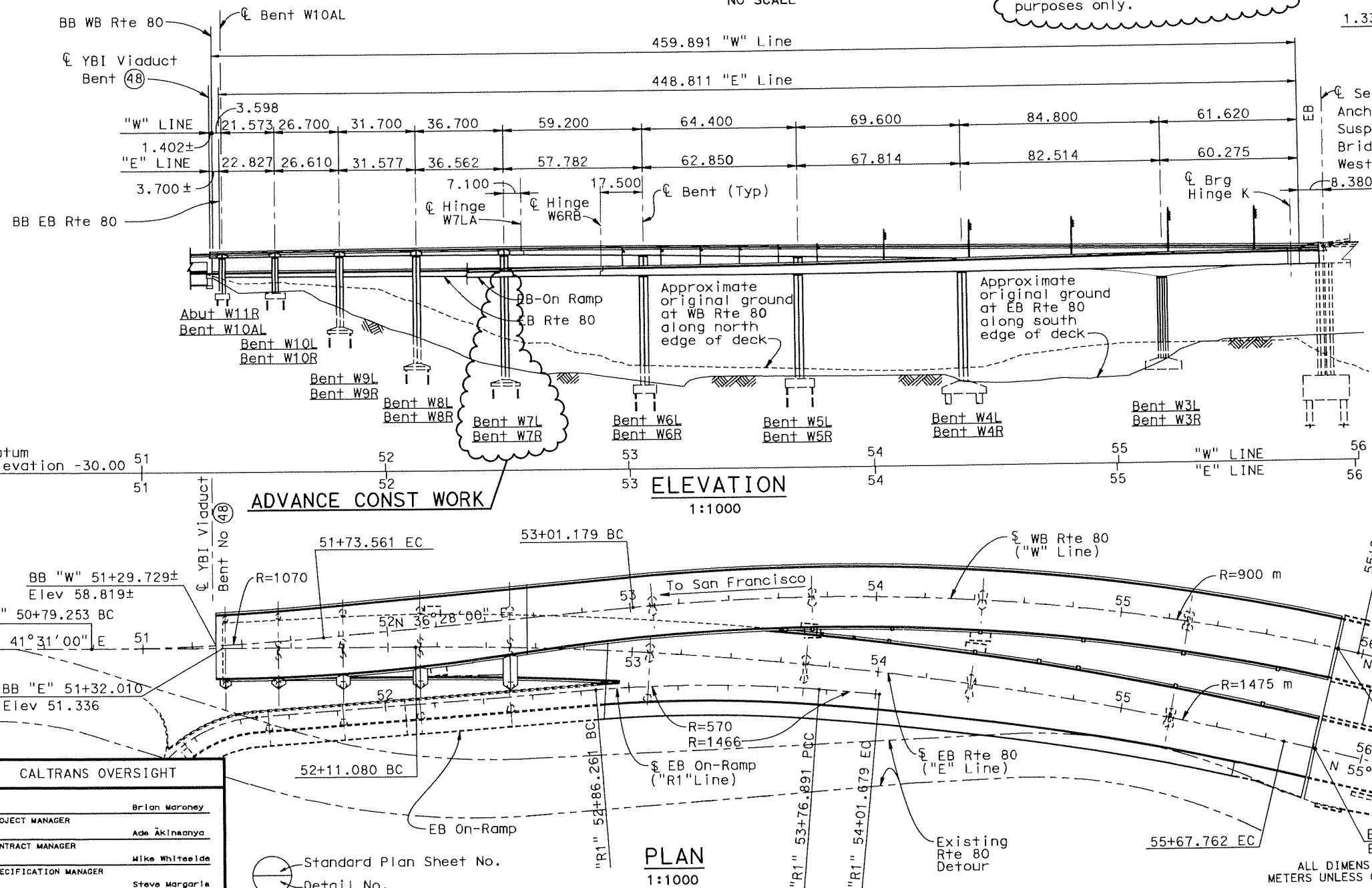

ELEVATION
1:1000

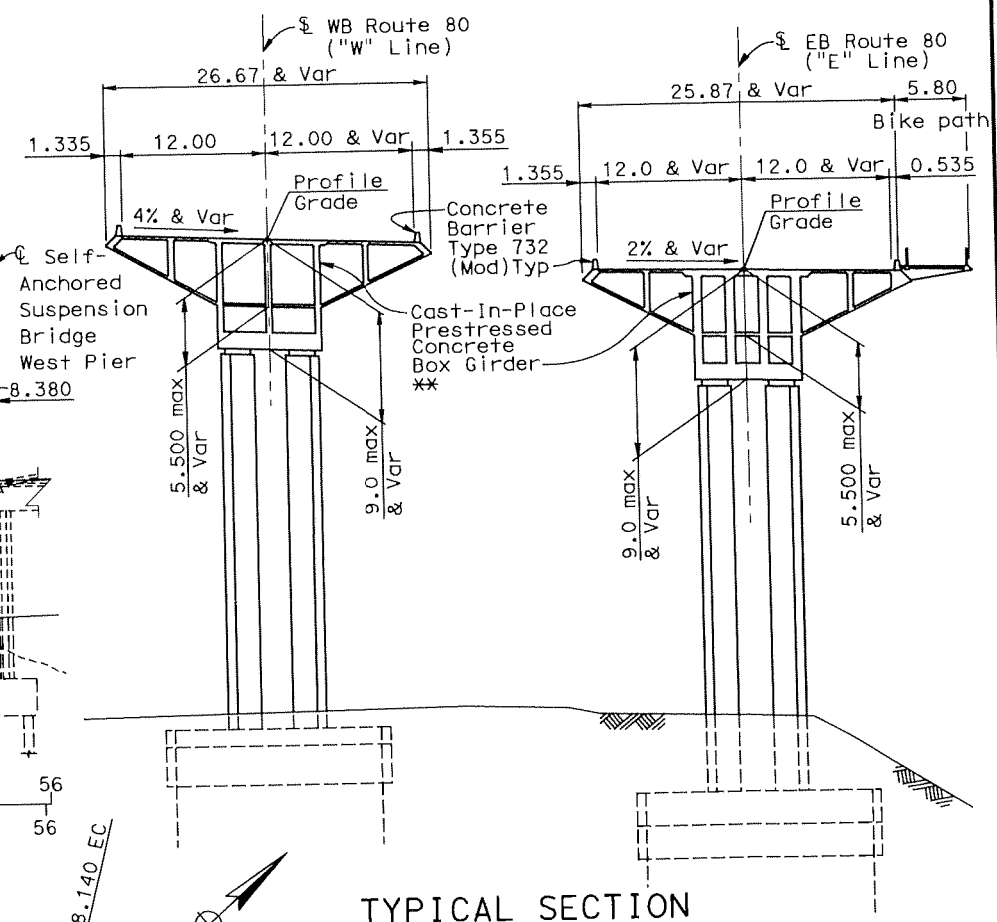

TYPICAL SECTION
(Bent W3L & W3R Shown)
1:300

Notes:
For approximate bridge quantities, see "General Notes" sheet. For pile data table, see "Bent Elevation W7" sheet.

———— Indicates existing structures.

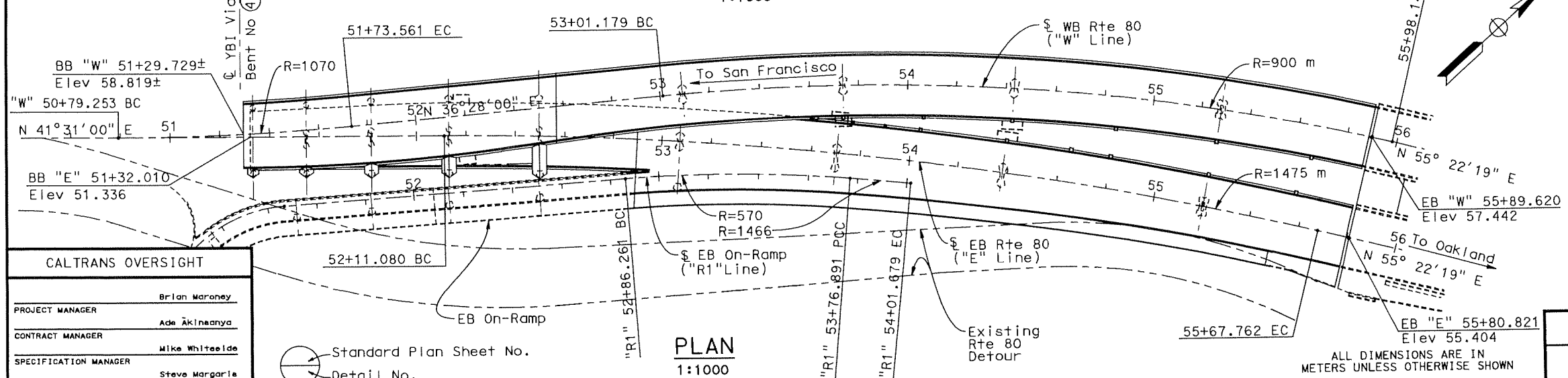

PLAN
1:1000

Standard Plan Sheet No.
Detail No.

ALL DIMENSIONS ARE IN METERS UNLESS OTHERWISE SHOWN

SUPPLEMENTAL SHEET

CONTRACT CHANGE ORDER NO. 75
SHEET 126 OF 136

CALTRANS OVERSIGHT	
PROJECT MANAGER	Brian Maroney
CONTRACT MANAGER	Ade Akinsanya
SPECIFICATION MANAGER	Mike Whiteside
SPECIFICATION OVERSIGHT	Steve Margaris
DESIGN OVERSIGHT	JOHN MOOK, BERNARD CHAN, JUAN F. CARPIO
SIGN OFF DATE	

Rev. Date: 5-18-98

	BY	CHECKED
DESIGN	Desai	Jain
DETAILS	van Ryn/Zucchi/Mai	Jain
QUANTITIES	Liao	E. Nichol

LOAD FACTOR DESIGN	LIVE LOADING: HS20-44 AND ALTERNATIVE AND PERMIT DESIGN LOAD	
LAYOUT	BY Desai	CHECKED Alcaraz
SPECIFICATIONS	BY J.Ely	PLANS AND SPECS COMPARED Jain

ORIGINAL SCALE IN MILLIMETERS FOR REDUCED PLANS 0 10 20 30 40 50 60 70 80 90 100

PREPARED FOR THE STATE OF CALIFORNIA
DEPARTMENT OF TRANSPORTATION

Jal Birdy
PROJECT ENGINEER

CU 04251
EA 0120S1

BRIDGE NO.	34-0006 L/R
KILOMETER POST	12.8

DISREGARD PRINTS BEARING EARLIER REVISION DATES →

REVISION DATES (PRELIMINARY STAGE ONLY): 11/21/06 11/27/06 11/29/06 5/29/07 5/16/02 2/14/03 7/3/06 8/24/06 10/17/06 11/20/06

SHEET 1 OF 17

SAN FRANCISCO OAKLAND BAY BRIDGE
EAST SPAN SEISMIC SAFETY PROJECT

YBI TRANSITION STRUCTURES

ADVANCE CONST PACKAGE NO. 2RO

GENERAL PLAN

FILE => p:\4141-06\CADD\TS\Final Const 3\Adv Const Pkg 2RO\eagp0.dgn

May 29, 2007

TIME PLOTTED => 11:36:18 AM
DATE PLOTTED => 5/29/2007
USERNAME => fsamson

APPROXIMATE BRIDGE QUANTITIES

	WB STRUCTURE	EB STRUCTURE	TOTAL
BRIDGE REMOVAL (PORTION)	–	–	LUMP SUM
STRUCTURE EXCAVATION (BRIDGE)	3850	3850	7700 M3
STRUCTURE EXCAVATION (TYPE H)	300	–	300 M3
STRUCTURE BACKFILL (BRIDGE) (CEMENT MODIFIED)	3050	3050	6100 M3
SOIL NAIL ASSEMBLY	2320	2320	4640 M
FURNISH & INSTALL SOLDIER PILES (HP360 X108)	17	–	17 M
610MM DRILLED HOLE (SOLDIER PILE)	14	–	14 M
FURNISH STEEL PILING (HP 360X132)	2230	–	2230 M
DRIVE STEEL PILE (HP 360X132)	159	–	159 EA
FURNISH STEEL PILING (W 360 X 196)	–	2148	2148 M
DRIVE STEEL PILE (W 360 X 196)	–	110	110 EA
STRUCTURAL CONCRETE, BRIDGE FOOTING	490	495	985 M3
STRUCTURAL CONCRETE, BRIDGE	486	344	830 M3
STRUCTURAL CONCRETE, RETAINING WALL	10	–	10 M3
BAR REINFORCING STEEL (BRIDGE)	168000	180000	348000 KG
BAR REINFORCING STEEL, RETAINING WALL	650	–	650 KG
SHOTCRETE	63	62	125 M3
TIMBER LAGGING	1	–	1 M3
CORRUGATED STEEL PIPE (ISOLATION SLEEVE)	710	4040	4750 KG
BRIDGE DECK DRAINAGE SYSTEM	118	102	220 KG

GENERAL NOTES

Load Factor Design

Design: Caltrans Design Specifications-April 2000 (LFD)
(1996 AASHTO with interims and revisions by Caltrans)
Dead Load: Includes 1675 N/m2 for future wearing surface on roadbed
Live Load: HS20-44 and alternative and permit design load
Bike Path Live Load: 4000 N/m2
Future Mass Transit Loading:

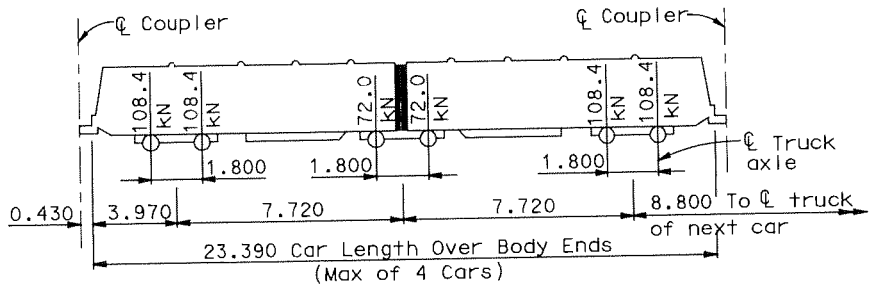

Seismic Loading: Refer to project specific seismic design criteria
for San Francisco Oakland Bay Bridge
East Span Seismic Safety Project Dated 01-08-00
See "Site Specific Response Spectra"

Reinforced Concrete: Fy = 420 MPa
F'c = See "Concrete Strength & Type Limits"

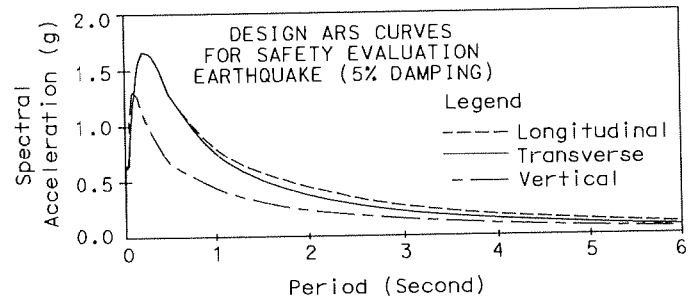

SITE SPECIFIC RESPONSE SPECTRA

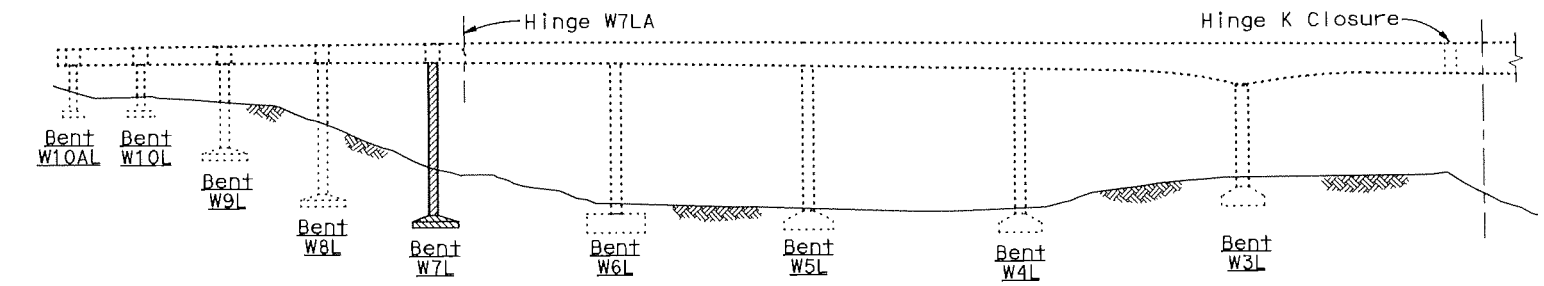

WESTBOUND TRANSITION STRUCTURE

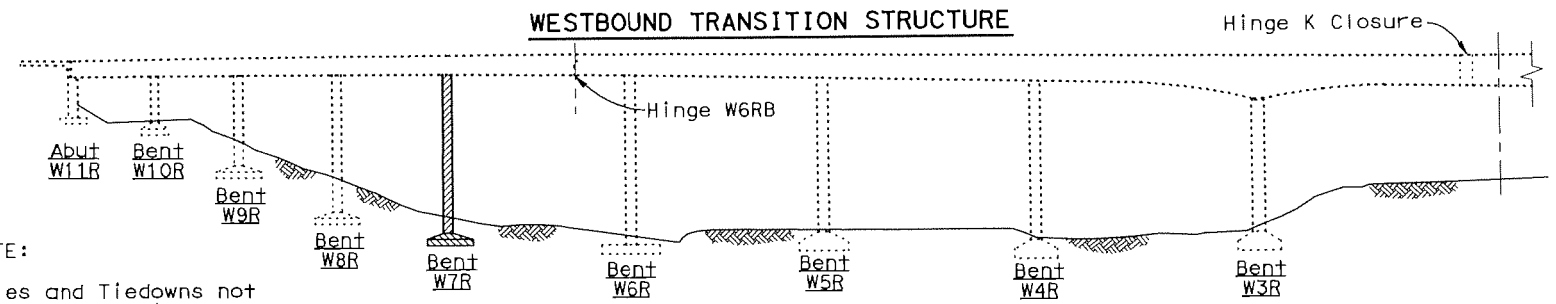

EASTBOUND TRANSITION STRUCTURE

NOTE:

Piles and Tiedowns not shown for clarity.

ALL DIMENSIONS ARE IN METERS UNLESS OTHERWISE SHOWN

CONCRETE STRENGTH & TYPE LIMITS

Structural concrete, bridge (25 MPa at 28 days)
Structural concrete, bridge footing (25 MPa at 28 days)

DIST.	COUNTY	ROUTE	KILOMETER POST TOTAL PROJECT	SHEET NO.	TOTAL SHEETS
04	SF	80	12.6/13.2	18	33

Caltrans Metric

A.L. Ely
REGISTERED ENGINEER - CIVIL

PLANS APPROVAL DATE

REGISTERED PROFESSIONAL ENGINEER A.L. ELY No. 18880 Exp. 6-30-07 CIVIL STATE OF CALIFORNIA

The State of California or its officers or agents shall not be responsible for the accuracy or completeness of electronic copies of this plan sheet.

T.Y. LIN / MOFFATT & NICHOL
TWO HARRISON STREET
SAN FRANCISCO, CA 94105

INDEX TO BRIDGE PLANS

1. GENERAL PLAN
2. GENERAL NOTES
3. FOUNDATION PLAN
4. EXCAVATION PLAN BENT W7
5. BENT ELEVATION W7
6. BENT W7L DETAILS NO. 1
7. BENT W7L DETAILS NO. 2
8. BENT W7L DETAILS NO. 3
9. BENT W7L DETAILS NO. 4
10. BENT W7R DETAILS NO. 1
11. BENT W7R DETAILS NO. 2
12. SOIL NAIL WALL DETAILS NO. 1
13. SOIL NAIL WALL DETAILS NO. 2
14. COLUMN ISOLATION SLEEVE DETAILS
15-17. LOG OF TEST BORINGS NO. 1 TO NO. 3

APPLICABLE STANDARD PLANS (DATED JULY 1999)

A10A	ABBREVIATIONS
A10B	SYMBOLS
A62B	LIMITS OF PAYMENT FOR EXCAVATION AND BACKFILL - BRIDGE SURCHARGE AND WALL
A62C	LIMITS OF PAYMENT FOR EXCAVATION AND BACKFILL - BRIDGE
B0-1	BRIDGE DETAILS
B0-3	BRIDGE DETAILS
B3-9	RETAINING WALL DETAILS NO. 2
B7-6	DECK DRAINS TYPES D-1 AND D-2

SUPPLEMENTAL SHEET

CONTRACT CHANGE ORDER NO. 75
SHEET 121 OF 136

DESIGN OVERSIGHT	DESIGN	BY Desai	CHECKED Jain
JOHN MOOK, BERNARD CHAN, JUAN F. CARPIO	DETAILS	BY van Ryn/Zucchi/Mai	CHECKED Jain
SIGN OFF DATE	QUANTITIES	BY Liao	CHECKED E. Nichol

PREPARED FOR THE STATE OF CALIFORNIA DEPARTMENT OF TRANSPORTATION

Jal Birdy
PROJECT ENGINEER

CU 04251
EA 0120S1

BRIDGE NO. 34-0006 L/R
KILOMETER POST 12.8

DISREGARD PRINTS BEARING EARLIER REVISION DATES →

REVISION DATES (PRELIMINARY STAGE ONLY): 11/14/06 | 11/27/06 | 11/28/06 | 5/29/07 | 5/30/02 | 2/14/03 | 7/2/06 | 8/16/06 | 10/17/06 | 11/20/06

SHEET 2 OF 17

SAN FRANCISCO OAKLAND BAY BRIDGE
EAST SPAN SEISMIC SAFETY PROJECT

YBI TRANSITION STRUCTURES

ADVANCE CONST PACKAGE NO. 2RO

GENERAL NOTES

ORIGINAL SCALE IN MILLIMETERS FOR REDUCED PLANS 0 10 20 30 40 50 60 70 80 90 100

Rev. Date: 5-18-98

FILE => p:\4141-06\CADD\TS\Final Const 3\Adv Const Pkg 2RO\eaitp02.dgn

May 29, 2007

USERNAME => fsamson DATE PLOTTED => 5/29/2007 TIME PLOTTED => 2:20:30 PM

DIST.	COUNTY	ROUTE	KILOMETER POST TOTAL PROJECT	SHEET NO.	TOTAL SHEETS
04	SF	80	12.6/13.2	19	33

Caltrans Metric

A. L. Ely
REGISTERED ENGINEER - CIVIL

REGISTERED PROFESSIONAL ENGINEER — A.L. ELY — No. 18880 — Exp. 6-30-07 — CIVIL — STATE OF CALIFORNIA

PLANS APPROVAL DATE

The State of California or its officers or agents shall not be responsible for the accuracy or completeness of electronic copies of this plan sheet.

T.Y. LIN / MOFFATT & NICHOL
TWO HARRISON STREET
SAN FRANCISCO, CA 94105

LEGEND

H — Indicates steel "H" piles (All steel piles not shown)

Denotes bottom of footing elevation

Denotes existing structure

NOTE:

1. For limits of payment for structure excavation and backfill, see "Excavation Plan Bent W7" sheet.
2. Utility locations shown are approximate, for utility relocations and abandonments see rdwy plans.

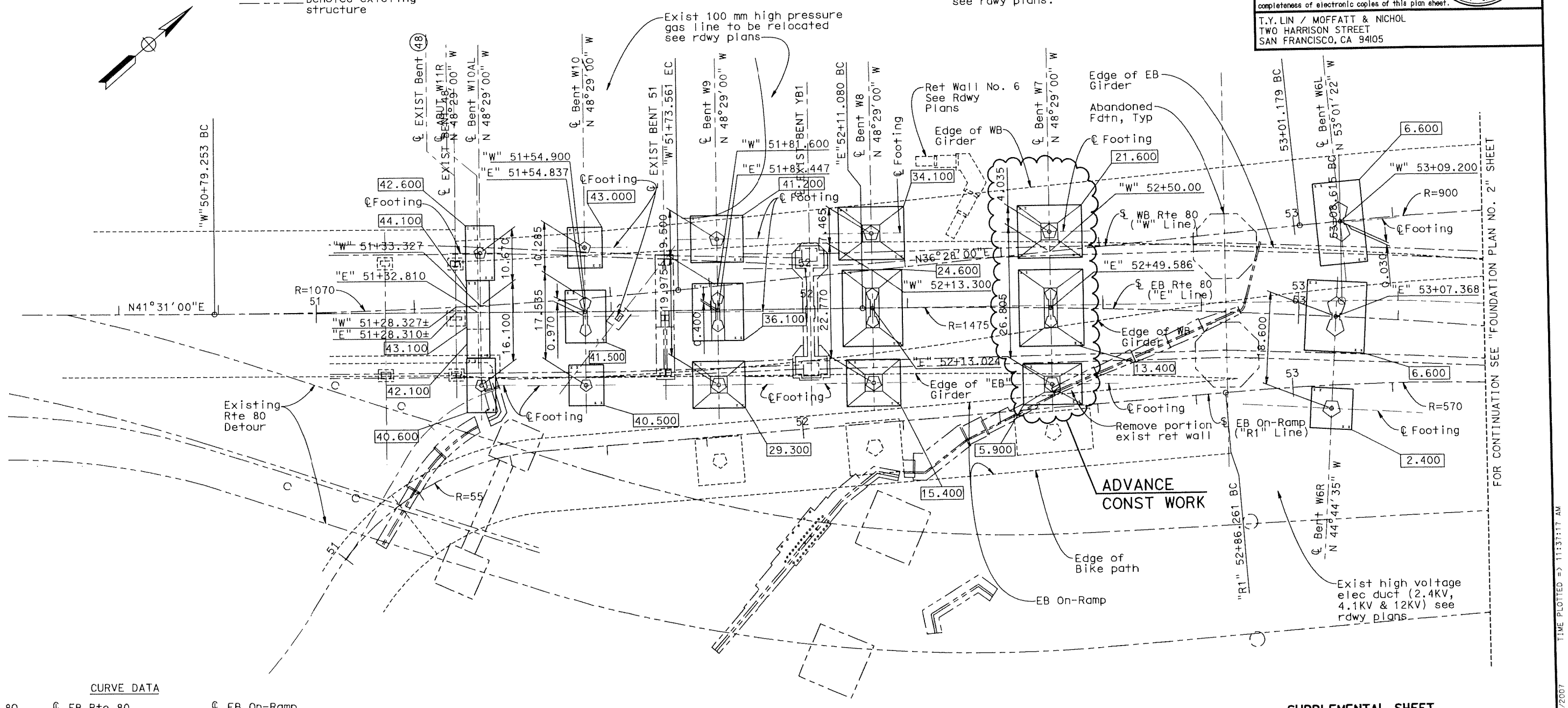

CONTINUATION SEE "FOUNDATION PLAN NO. 2" SHEET

CURVE DATA

℄ WB Rte 80	℄ EB Rte 80	℄ EB On-Ramp	
R = 1070 m	R = 1475 m	R = 55 m	R = 570 m
Δ = 05°03'00"	Δ = 13°51'19"	Δ = 53°57'54"	Δ = 09°06'36"
T = 47.185 m	T = 179.215 m	T = 28.003 m	T = 45.411 m
L = 94.308 m	L = 356.682 m	L = 51.803 m	L = 90.630 m
R = 900 m			
Δ = 18°54'18"			
T = 149.842 m			
L = 296.961 m			

PARTIAL PLAN
1:400

Note: Work shown in addition to that designated as "Advance Const Work" is for informational purposes only.

ALL DIMENSIONS ARE IN METERS UNLESS OTHERWISE SHOWN

SUPPLEMENTAL SHEET

CONTRACT CHANGE ORDER NO. 75
SHEET 122 OF 136

SAN FRANCISCO OAKLAND BAY BRIDGE
EAST SPAN SEISMIC SAFETY PROJECT

YBI TRANSITION STRUCTURES

ADVANCE CONST PACKAGE NO. 2RO

FOUNDATION PLAN

Jal Birdy
PROJECT ENGINEER

BRIDGE NO. 34-0006 L/R
KILOMETER POST 12.8

CU 04251
EA 0120S1

DISREGARD PRINTS BEARING EARLIER REVISION DATES

REVISION DATES (PRELIMINARY STAGE ONLY): 11/17/06 | 11/27/06 | 11/29/06 | 5/29/07 | 5/30/07 | 2/14/08 | 3/3/08 | 8/27/08 | 10/21/08 | 11/20/08

SHEET 3 OF 17

DESIGN OVERSIGHT	SCALE:	VERT.DATUM NGVD 29	HORZ.DATUM NAD 83	DESIGN BY Desai	CHECKED Jain
JOHN MOOK, BERNARD CHAN, JUAN F. CARPIO	PHOTOGRAMMETRY AS OF:		ALIGNMENT TIES	DETAILS BY Van Ryn/Zucchi/Mal	CHECKED Jain
SIGN OFF DATE	SURVEYED BY		DRAFTED BY	QUANTITIES BY Liaa	CHECKED E. Nichol
Rev. Date: 5-16-98	FIELD CHECKED BY		CHECKED BY		

PREPARED FOR THE STATE OF CALIFORNIA DEPARTMENT OF TRANSPORTATION

ORIGINAL SCALE IN MILLIMETERS FOR REDUCED PLANS 0 10 20 30 40 50 60 70 80 90 100

FILE => p:\4141-06\CADD\TS\Final Const 3\Adv Const Pkg 2RO\ecfnp01.dgn

Nish Kapil 11/29/06
GEOTECHNICAL PROFESSIONAL APPROVAL DATE

May 29, 2007

TIME PLOTTED => 11:37:17 AM
DATE PLOTTED => 5/29/2007
USERNAME => fsamson

DIST.	COUNTY	ROUTE	KILOMETER POST TOTAL PROJECT	SHEET NO.	TOTAL SHEETS
04	SF	80	12.6/13.2	20	33

Caltrans Metric

REGISTERED ENGINEER - CIVIL

PLANS APPROVAL DATE

REGISTERED PROFESSIONAL ENGINEER — A.L. ELY — No. 18880 — Exp. 6-30-07 — CIVIL — STATE OF CALIFORNIA

The State of California or its officers or agents shall not be responsible for the accuracy or completeness of electronic copies of this plan sheet.

T.Y. LIN / MOFFATT & NICHOL
TWO HARRISON STREET
SAN FRANCISCO, CA 94105

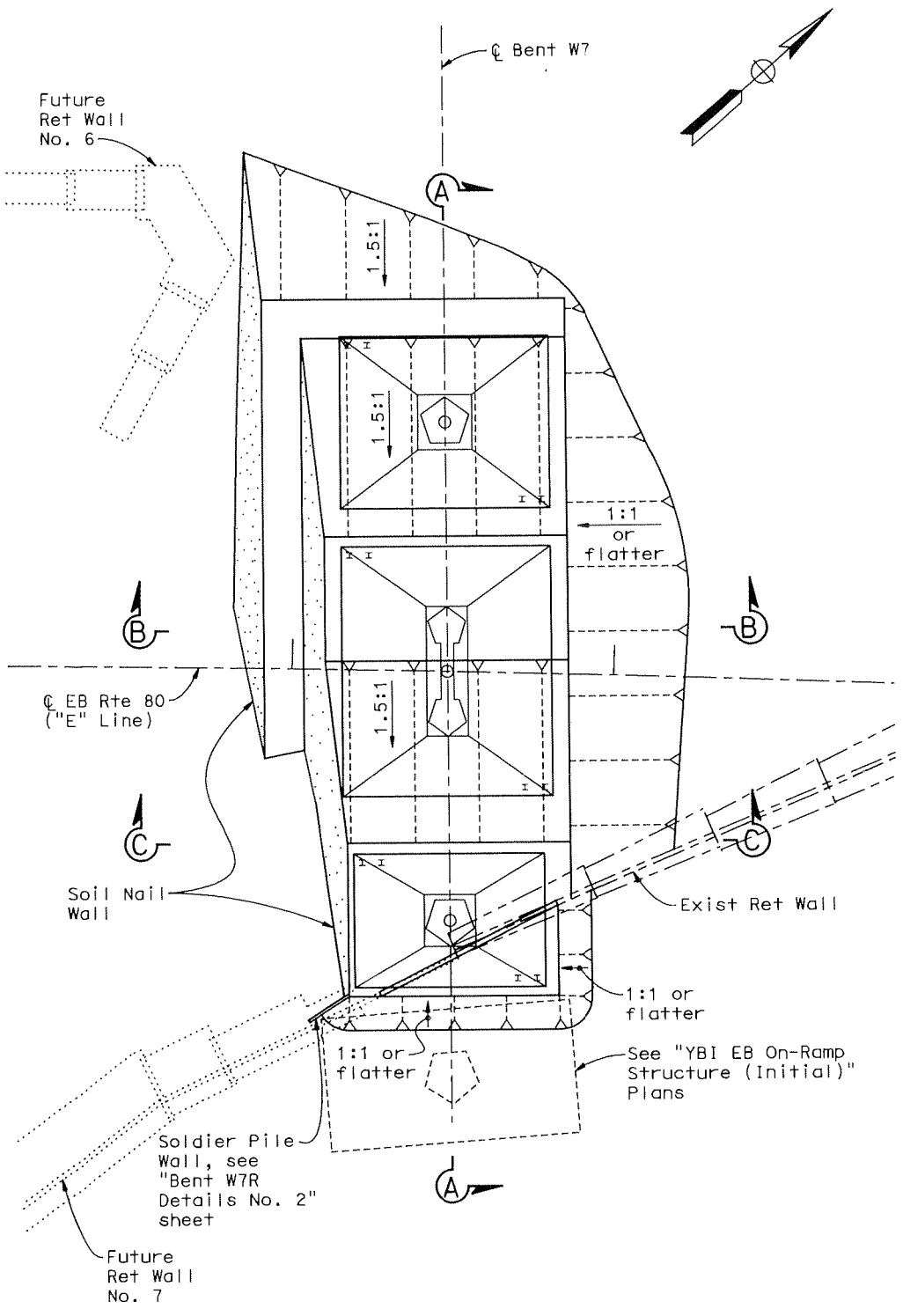

FOUNDATION EXCAVATION PLAN
1:200

Note: Upper 0.6m of existing soil at north footing of Bent W7L is considered hazardous with restricted disposal requirements.

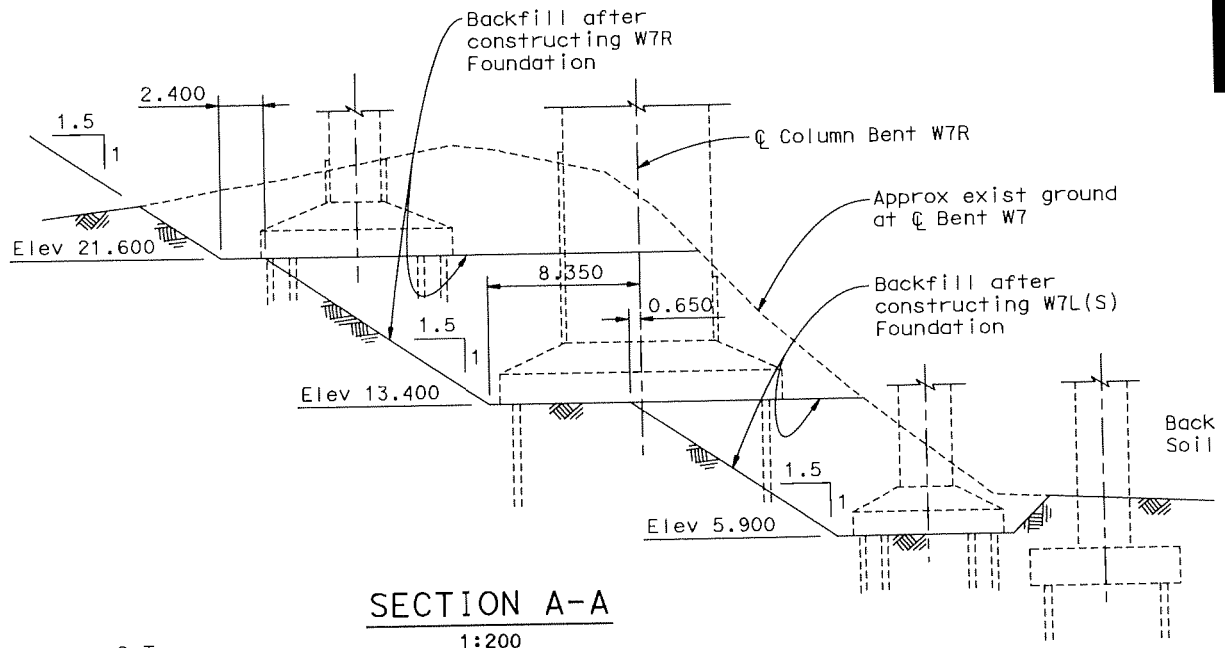

SECTION A-A
1:200

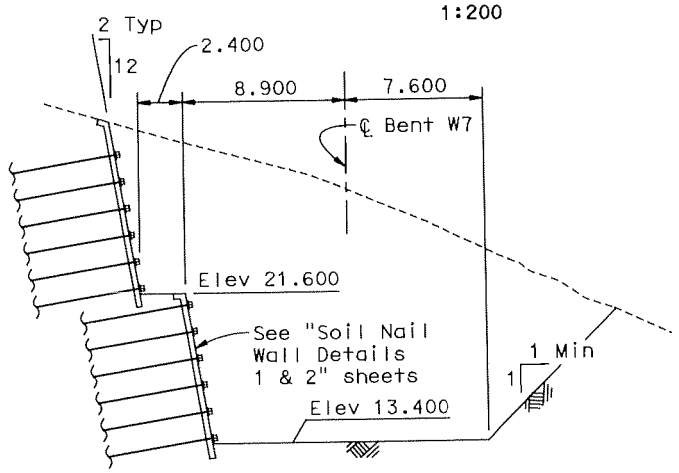

SECTION B-B
1:200

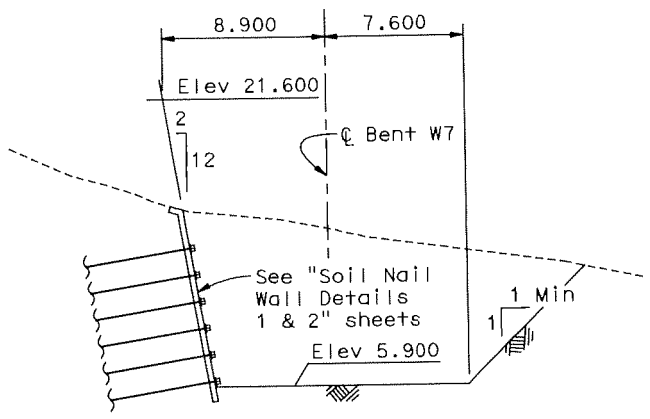

SECTION C-C
1:200

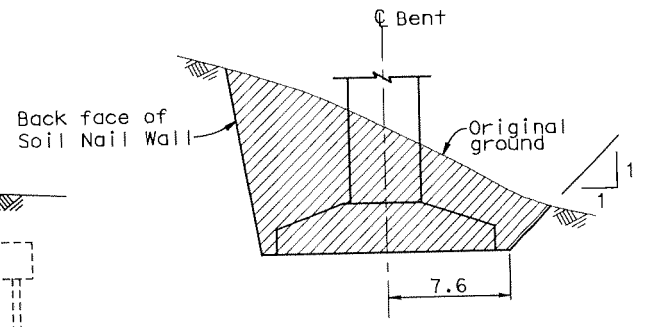

STRUCTURE EXCAVATION

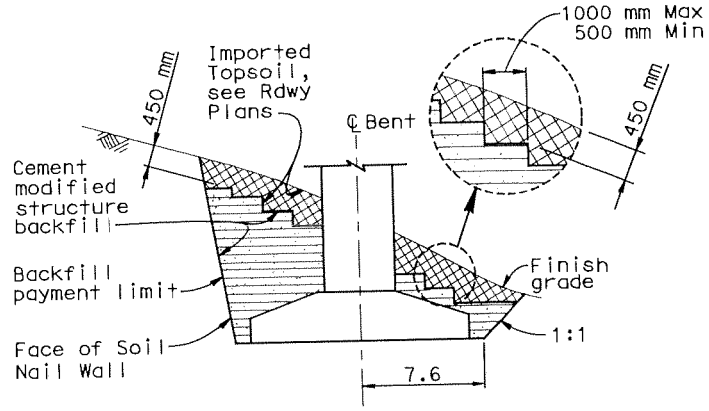

STRUCTURE BACKFILL

Note: Any overexcavation at footings shall be backfilled as shown here for structure backfill.

LIMITS OF PAYMENT FOR STRUCTURE EXCAVATION & BACKFILL

For Details not shown see A62C
NO SCALE

SUPPLEMENTAL SHEET

CONTRACT CHANGE ORDER NO. 75
SHEET 123 OF 136

ALL DIMENSIONS ARE IN METERS UNLESS OTHERWISE SHOWN

SAN FRANCISCO OAKLAND BAY BRIDGE
EAST SPAN SEISMIC SAFETY PROJECT

YBI TRANSITION STRUCTURES

ADVANCE CONST PACKAGE NO. 2R0

EXCAVATION PLAN AT BENT W7

DESIGN OVERSIGHT		DESIGN BY	CHECKED
JOHN MOOK, BERNARD CHAN, JUAN F. CARPIO		DETAILS BY van Ryn/Zucchi/Mai	CHECKED Jain
SIGN OFF DATE		QUANTITIES BY Liao	CHECKED E. Nichol

PREPARED FOR THE STATE OF CALIFORNIA DEPARTMENT OF TRANSPORTATION

Jal Birdy
PROJECT ENGINEER

BRIDGE NO. 34-0006 L/R
KILOMETER POST 12.8

CU 04251
EA 0120S1

DISREGARD PRINTS BEARING EARLIER REVISION DATES →

REVISION DATES (PRELIMINARY STAGE ONLY): 11/17/06 | 11/27/06 | 11/28/06 | 5/29/07 | 5/30/07 | 2/21/03 | 3/17/06 | 8/18/06 | 10/17/06 | 11/28/06

SHEET 4 OF 17

Rev. Date: 5-18-98

ORIGINAL SCALE IN MILLIMETERS FOR REDUCED PLANS 0 10 20 30 40 50 60 70 80 90 100

FILE => p:\4141-06\CADD\TS\Final Const 3\Adv Const Pkg 2R0\edexc0.dgn

May 29, 2007

USERNAME => fscmson DATE PLOTTED => 5/29/2007 TIME PLOTTED => 2:21:40 PM

DIST.	COUNTY	ROUTE	KILOMETER POST TOTAL PROJECT	SHEET NO.	TOTAL SHEETS
04	SF	80			

Caltrans Metric

Al Ely
REGISTERED ENGINEER - CIVIL

PLANS APPROVAL DATE

The State of California or its officers or agents shall not be responsible for the accuracy or completeness of electronic copies of this plan sheet.

REGISTERED PROFESSIONAL ENGINEER — A.L. ELY — No. 18880 — Exp. 6-30-07 — CIVIL — STATE OF CALIFORNIA

T.Y. LIN / MOFFATT & NICHOL
TWO HARRISON STREET
SAN FRANCISCO, CA 94105

* Indicates Structure depth, top of deck to soffit, at ℄ WB or EB Rte 80

** Dimension shown is measured along ℄ bent

PILE DATA							
LOCATION	DESIGN LOADING	NOMINAL RESISTANCE		DESIGN TIP ELEVATION			SPECIFIED TIP ELEVATION
		COMPRESSION	TENSION	(1)	(2)	(3)	
PILE TYPE HP 360 x 132							
BENT W7L NORTH COLUMN	725 kN	1450 kN	725 kN	8.0	11.0	15.0	8.0
BENT W7L SOUTH COLUMN	725 kN	1450 kN	725 kN	-8.5	-4.5	0.0	-8.5
PILE TYPE W 360 x 196 ASTM A-992 (GRADE 50)							
BENT W7R	1350 kN	2700 kN	1350 kN	-6.0	-1.5	5.5	-6.0

Design tip elevation is controlled by the following demands:
(1) Compression, (2) Tension, (3) Lateral.

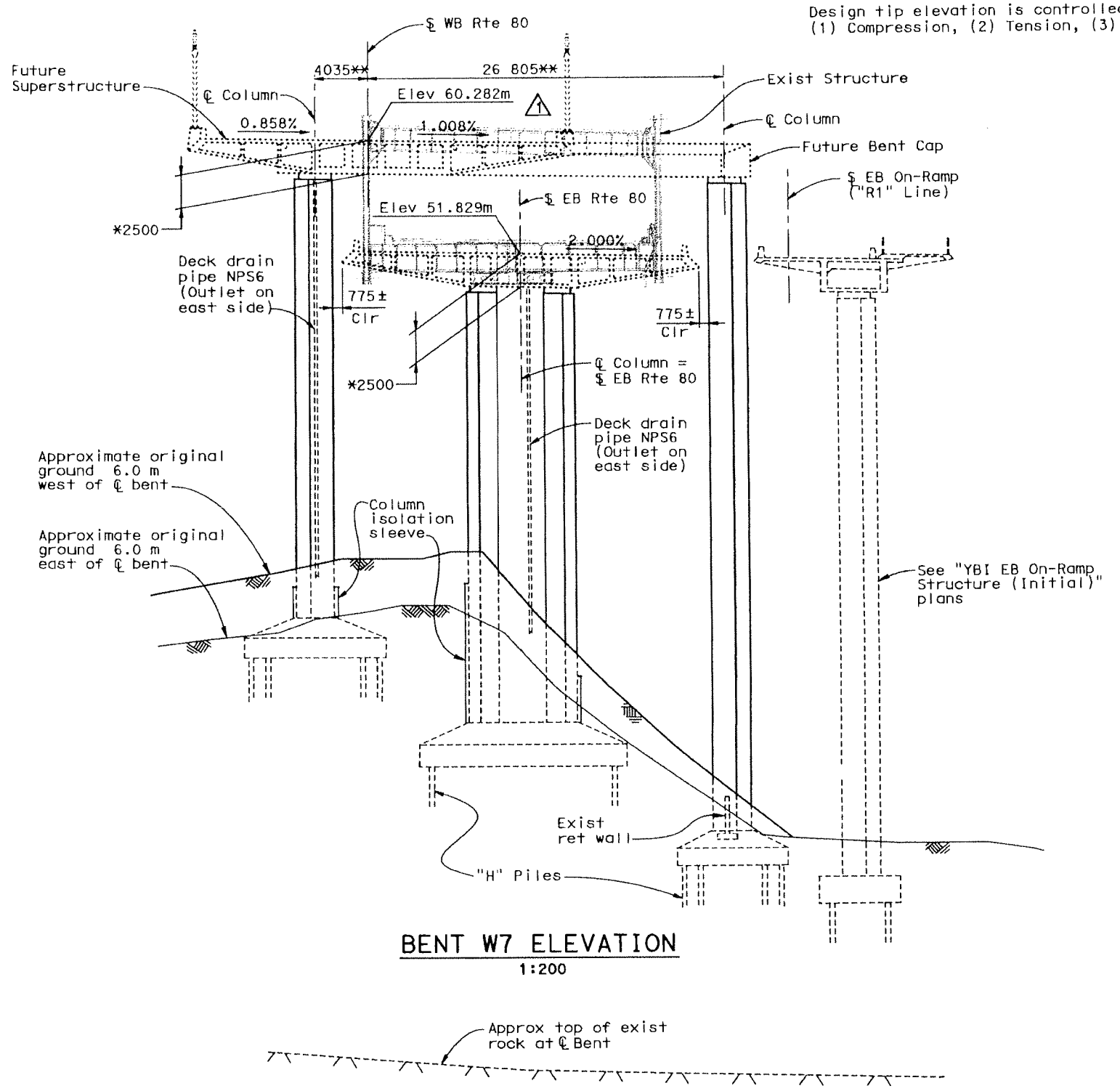

BENT W7 ELEVATION
1:200

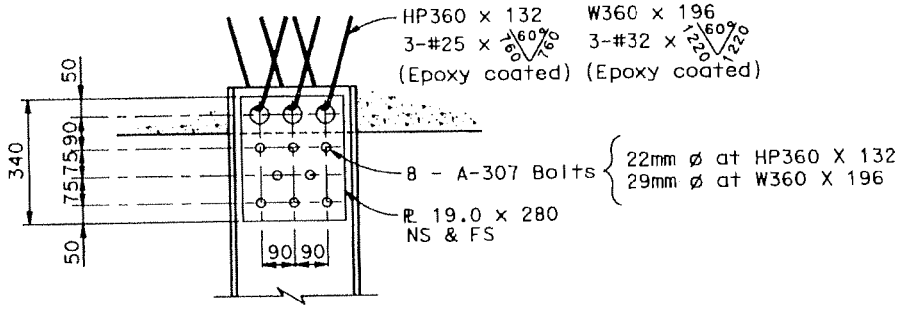

OPTIONAL PILE ANCHORAGE

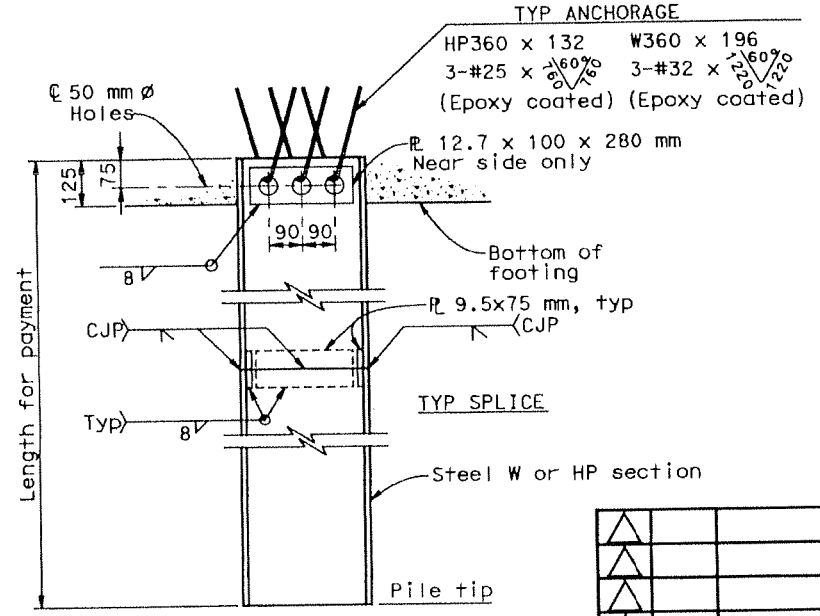

TYPICAL STEEL PILE DETAIL
1:10

MARK	DATE	REVISIONS: DESCRIPTIONS	BY	CH'D
1	10/30/07	REV ELEV & SLOPE FOR BENT W7L	ALE	JNB

SUPPLEMENTAL SHEET

CONTRACT CHANGE ORDER NO. 75
SHEET 124 OF 136

ALL DIMENSIONS ARE IN MILLIMETERS UNLESS OTHERWISE SHOWN

SAN FRANCISCO OAKLAND BAY BRIDGE
EAST SPAN SEISMIC SAFETY PROJECT

YBI TRANSITION STRUCTURES

ADVANCE CONST PACKAGE NO. 2RO

BENT ELEVATION W7

DESIGN OVERSIGHT	DESIGN	DETAILS	QUANTITIES
JOHN MOOK, BERNARD CHAN, JUAN F. CARPIO	BY Desai	BY van Ryn/Zucchi/Mai	BY Lioo
SIGN OFF DATE	CHECKED Jain	CHECKED Jain	CHECKED E. Nichol

PREPARED FOR THE STATE OF CALIFORNIA DEPARTMENT OF TRANSPORTATION

Jal Birdy
PROJECT ENGINEER

BRIDGE NO. 34-0006 L/R
KILOMETER POST 12.8

CU 04251
EA 0120S1

DISREGARD PRINTS BEARING EARLIER REVISION DATES

REVISION DATES (PRELIMINARY STAGE ONLY): 11/07/06 | 11/27/06 | 11/28/06 | 5/29/07 | 10/30/07 | 2/14/03 | 3/14/06 | 8/04/06 | 10/17/06 | 11/07/06

SHEET 5 OF 17

ORIGINAL SCALE IN MILLIMETERS FOR REDUCED PLANS 0 10 20 30 40 50 60 70 80 90 100

Rev. Date: 5-18-98

FILE => p:\4141-06\CADD\TS\Final Const 3\Adv Const Pkg 2RO\Revision 103007\eebnt03ely.dgn

Oct 30, 2007

TIME PLOTTED => 8:58:55 AM
DATE PLOTTED => 10/30/2007
USERNAME => fsamson

Caltrans Metric

REGISTERED ENGINEER - CIVIL

PLANS APPROVAL DATE

REGISTERED PROFESSIONAL ENGINEER — A.L. ELY — No. 18880 — Exp. 6-30-07 — CIVIL — STATE OF CALIFORNIA

The State of California or its officers or agents shall not be responsible for the accuracy or completeness of electronic copies of this plan sheet.

T.Y.LIN / MOFFATT & NICHOL
TWO HARRISON STREET
SAN FRANCISCO, CA 94105

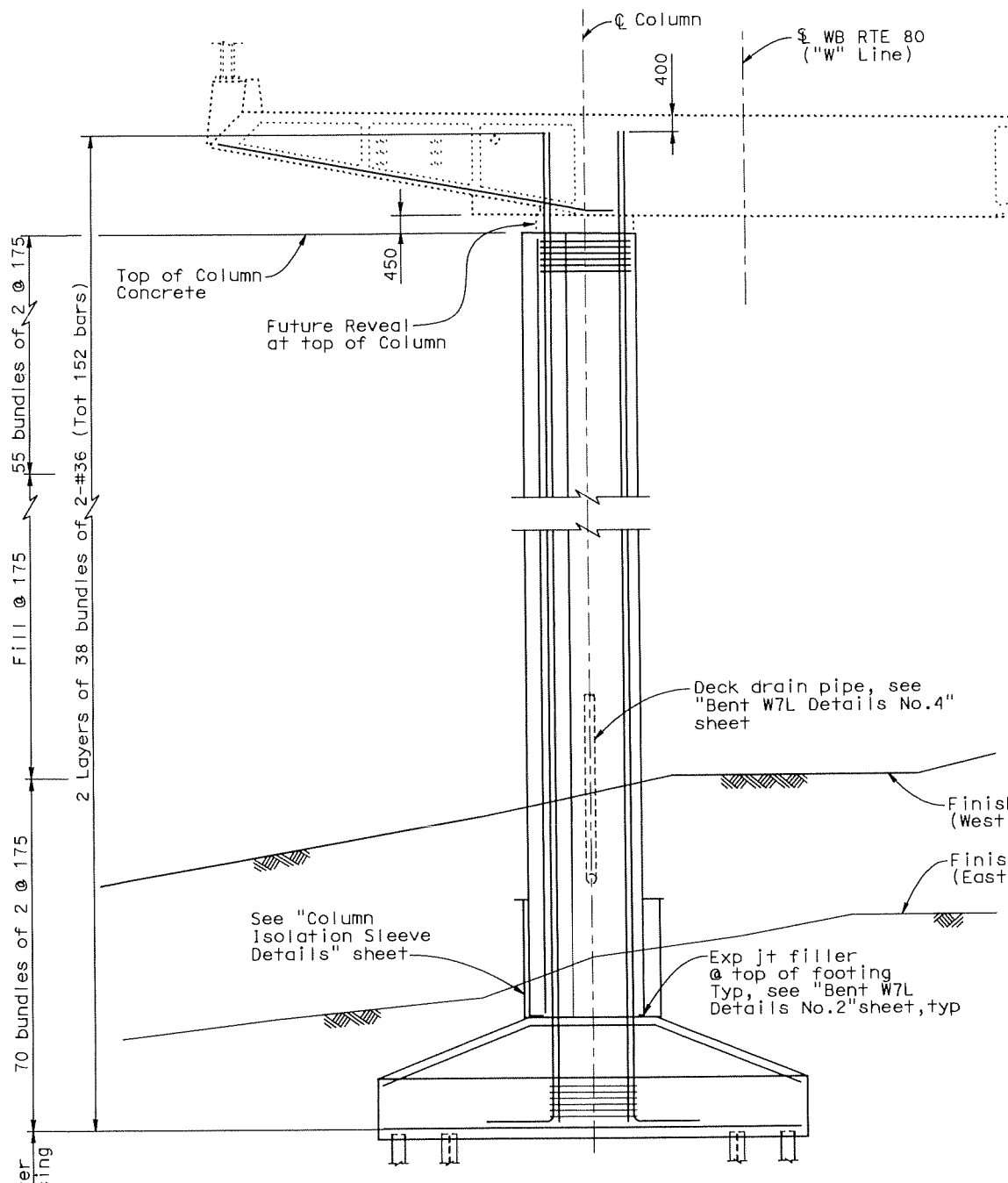

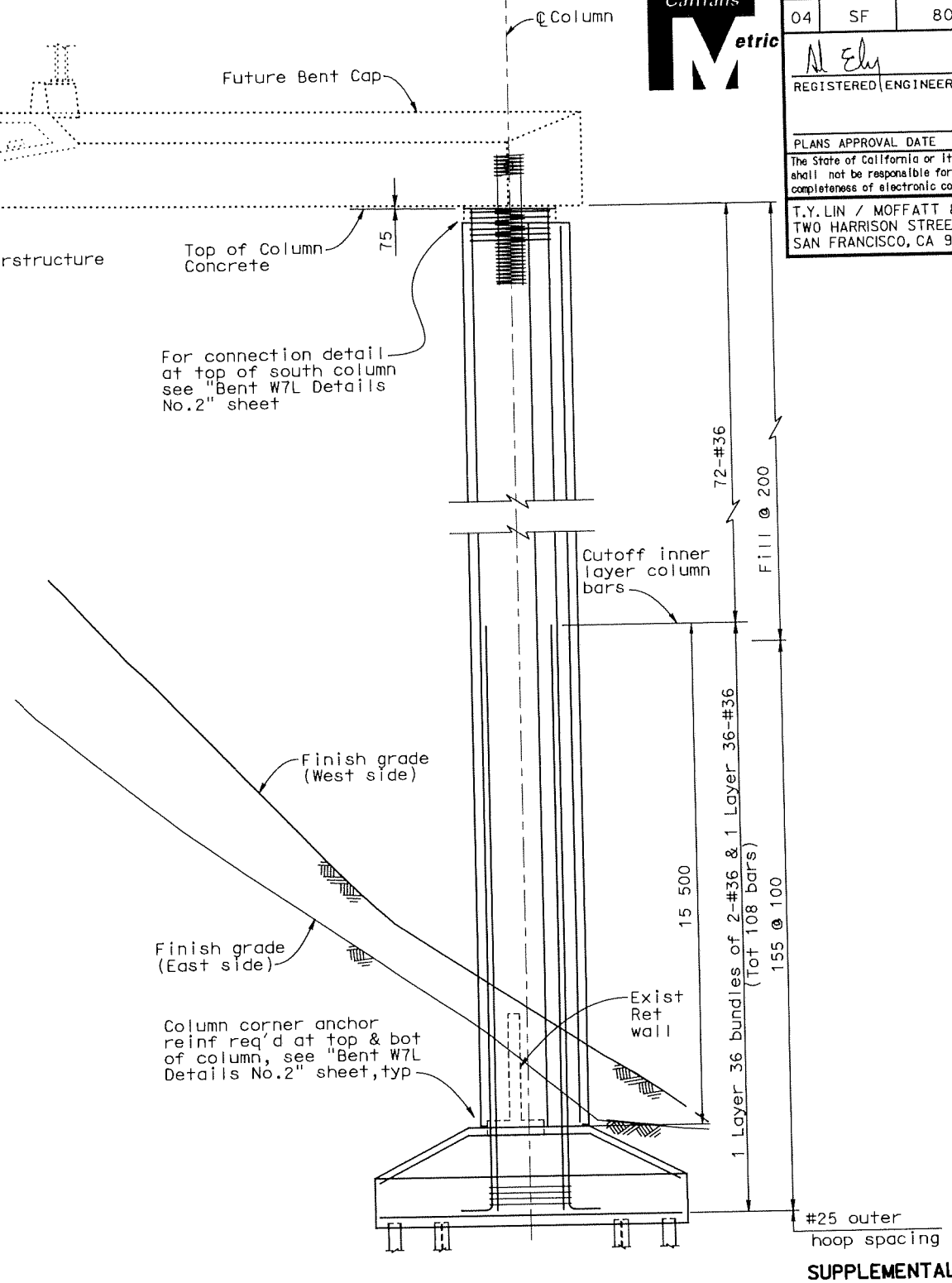

NOTE:
Splices not permitted in main column reinf within the distance of 9 m below bridge soffit nor 9 m above top of footing at north column nor 13 m above top of footing at south column (no splice zones). At other areas splices in main column reinf shall be ultimate butt splices (staggered).

ELEVATION
1:80

SUPPLEMENTAL SHEET

CONTRACT CHANGE ORDER NO. 75
SHEET 125 OF 136

ALL DIMENSIONS ARE IN MILLIMETERS UNLESS OTHERWISE SHOWN

SAN FRANCISCO OAKLAND BAY BRIDGE
EAST SPAN SEISMIC SAFETY PROJECT

YBI TRANSITION STRUCTURES
ADVANCE CONST PACKAGE NO. 2R0
BENT W7L DETAILS NO.1

DESIGN OVERSIGHT	JOHN MOOK, BERNARD CHAN, JUAN F. CARPIO	SIGN OFF DATE
DESIGN	BY Xie/Shangkuan	CHECKED Ahn
DETAILS	BY van Ryn/Zucchi/Mai	CHECKED Jain
QUANTITIES	BY Liao	CHECKED E. Nichol

PREPARED FOR THE STATE OF CALIFORNIA DEPARTMENT OF TRANSPORTATION

Jal Birdy
PROJECT ENGINEER

CU 04251
EA 0120S1

BRIDGE NO. 34-0006 L/R
KILOMETER POST 12.8

DISREGARD PRINTS BEARING EARLIER REVISION DATES →

REVISION DATES (PRELIMINARY STAGE ONLY): 11/04/06 | 11/27/06 | 11/29/06 | 5/29/07 | 5/30/07 | 6/14/07 | 7/3/07 | 8/15/07 | 10/17/07 | 11/08/07

SHEET 6 OF 17

Rev. Date: 5-18-98

ORIGINAL SCALE IN MILLIMETERS FOR REDUCED PLANS 0 10 20 30 40 50 60 70 80 90 100

FILE => p:\4141-06\CADD\TS\Final Const 3\Adv Const Pkg 2R0\eebnt15det.dgn

May 29, 2007

USERNAME => fsamson DATE PLOTTED => 5/29/2007 TIME PLOTTED => 11:38:23 AM

DIST.	COUNTY	ROUTE	KILOMETER POST TOTAL PROJECT	SHEET NO.	TOTAL SHEETS
04	SF	80	12.6/13.2	23	33

Caltrans Metric

REGISTERED ENGINEER - CIVIL

PLANS APPROVAL DATE

The State of California or its officers or agents shall not be responsible for the accuracy or completeness of electronic copies of this plan sheet.

REGISTERED PROFESSIONAL ENGINEER A.L. ELY No. 18880 Exp. 6-30-07 CIVIL STATE OF CALIFORNIA

T.Y. LIN / MOFFATT & NICHOL
TWO HARRISON STREET
SAN FRANCISCO, CA 94105

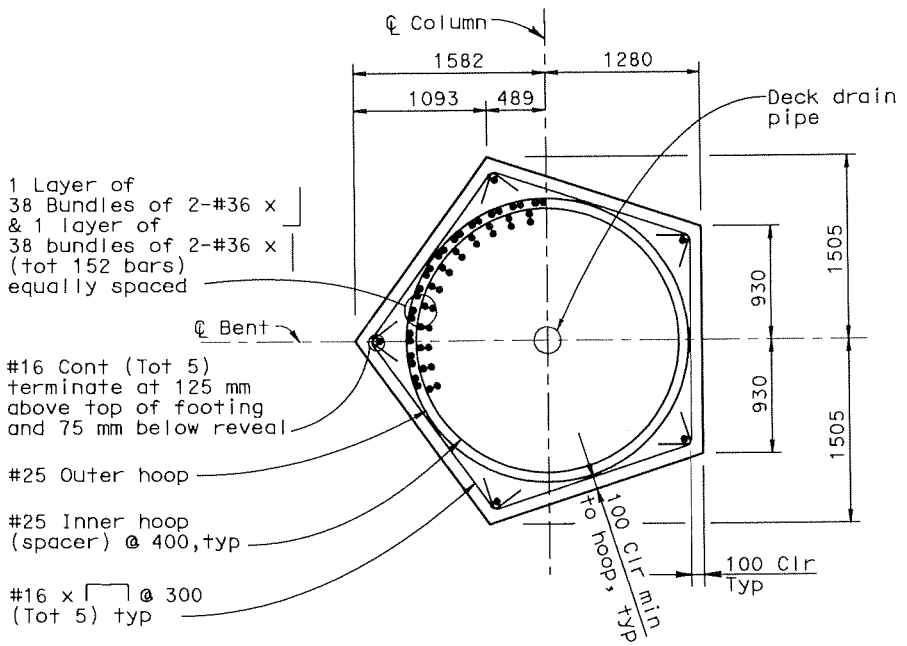

NORTH COLUMN
TYPICAL SECTION
1:30

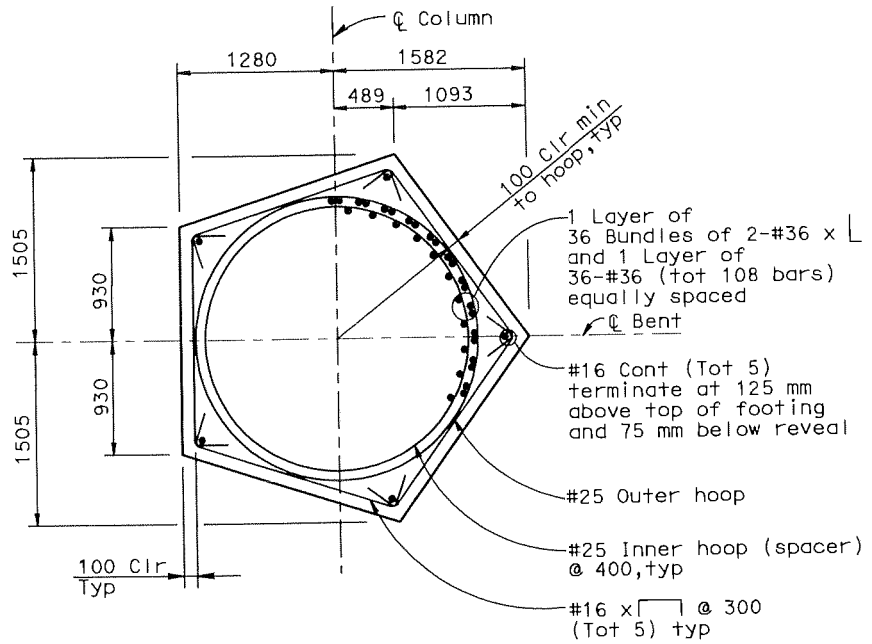

SOUTH COLUMN
TYPICAL SECTION
1:30

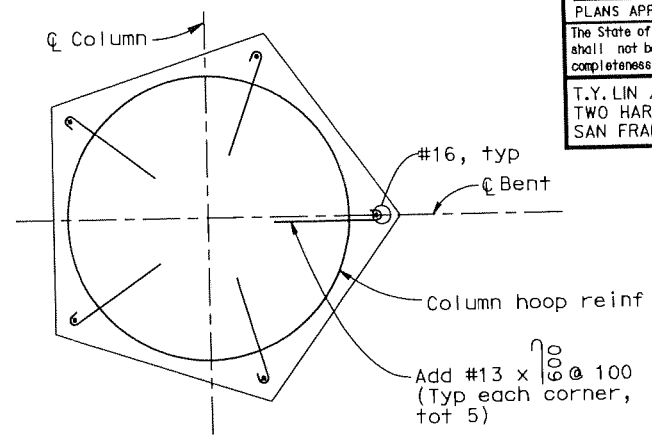

DETAIL D - COLUMN CORNER
ANCHOR REINFORCEMENT
(Column corner anchor reinf to be provided in regions within 3000 mm of bridge soffit or top of footing)
No Scale

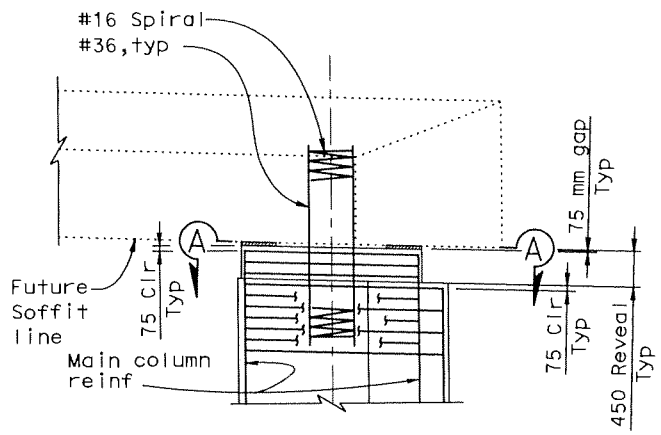

ELEVATION

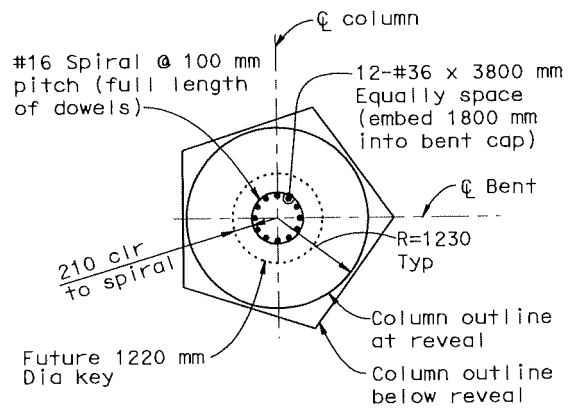

SECTION A-A

CONNECTION DETAIL AT
TOP OF SOUTH COLUMN
1:50

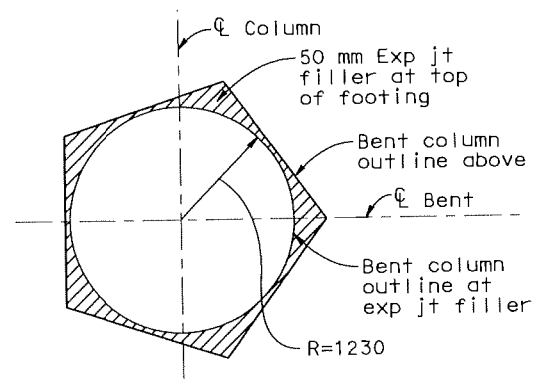

EXP JT FILLER AT TOP OF FOOTING
No Scale

SUPPLEMENTAL SHEET

CONTRACT CHANGE ORDER NO. 75
SHEET 126 OF 136

ALL DIMENSIONS ARE IN MILLIMETERS UNLESS OTHERWISE SHOWN

SAN FRANCISCO OAKLAND BAY BRIDGE
EAST SPAN SEISMIC SAFETY PROJECT

YBI TRANSITION STRUCTURES

ADVANCE CONST PACKAGE NO. 2R0

BENT W7L DETAILS NO.2

DESIGN OVERSIGHT		DESIGN	BY Xie	CHECKED Ahn	PREPARED FOR THE STATE OF CALIFORNIA DEPARTMENT OF TRANSPORTATION	Jal Birdy PROJECT ENGINEER	BRIDGE NO. 34-0006 L/R
JOHN MOOK, BERNARD CHAN, JUAN F. CARPIO		DETAILS	BY van Ryn/Zucchi/Mai	CHECKED Jain			KILOMETER POST 12.8
SIGN OFF DATE		QUANTITIES	BY Liao	CHECKED E. Nichol			

Rev. Date: 5-18-98

ORIGINAL SCALE IN MILLIMETERS FOR REDUCED PLANS 0 10 20 30 40 50 60 70 80 90 100

CU 04251
EA 0120S1

DISREGARD PRINTS BEARING EARLIER REVISION DATES

REVISION DATES (PRELIMINARY STAGE ONLY) 11/14/06 11/27/06 11/29/06 5/29/07 5/10/02 2/14/03 7/3/06 8/18/06 10/11/06 11/10/06

SHEET 7 OF 17

FILE => p:\4141-06\CADD\TS\Final Const 3\Adv Const Pkg 2R0\eebnt17det.dgn

May 29, 2007

USERNAME => fsamson DATE PLOTTED => 5/29/2007 TIME PLOTTED => 11:38:39 AM

Caltrans Metric

DIST.	COUNTY	ROUTE	KILOMETER POST TOTAL PROJECT	SHEET NO.	TOTAL SHEETS
04	SF	80	12.6/13.2	24	33

A. L. Ely
REGISTERED ENGINEER - CIVIL
PLANS APPROVAL DATE
The State of California or its officers or agents shall not be responsible for the accuracy or completeness of electronic copies of this plan sheet.

REGISTERED PROFESSIONAL ENGINEER
A.L. ELY
No. 18880
Exp. 6-30-07
CIVIL
STATE OF CALIFORNIA

T.Y.LIN / MOFFATT & NICHOL
TWO HARRISON STREET
SAN FRANCISCO, CA 94105

NOTE: ═══ - Indicates bundled bars

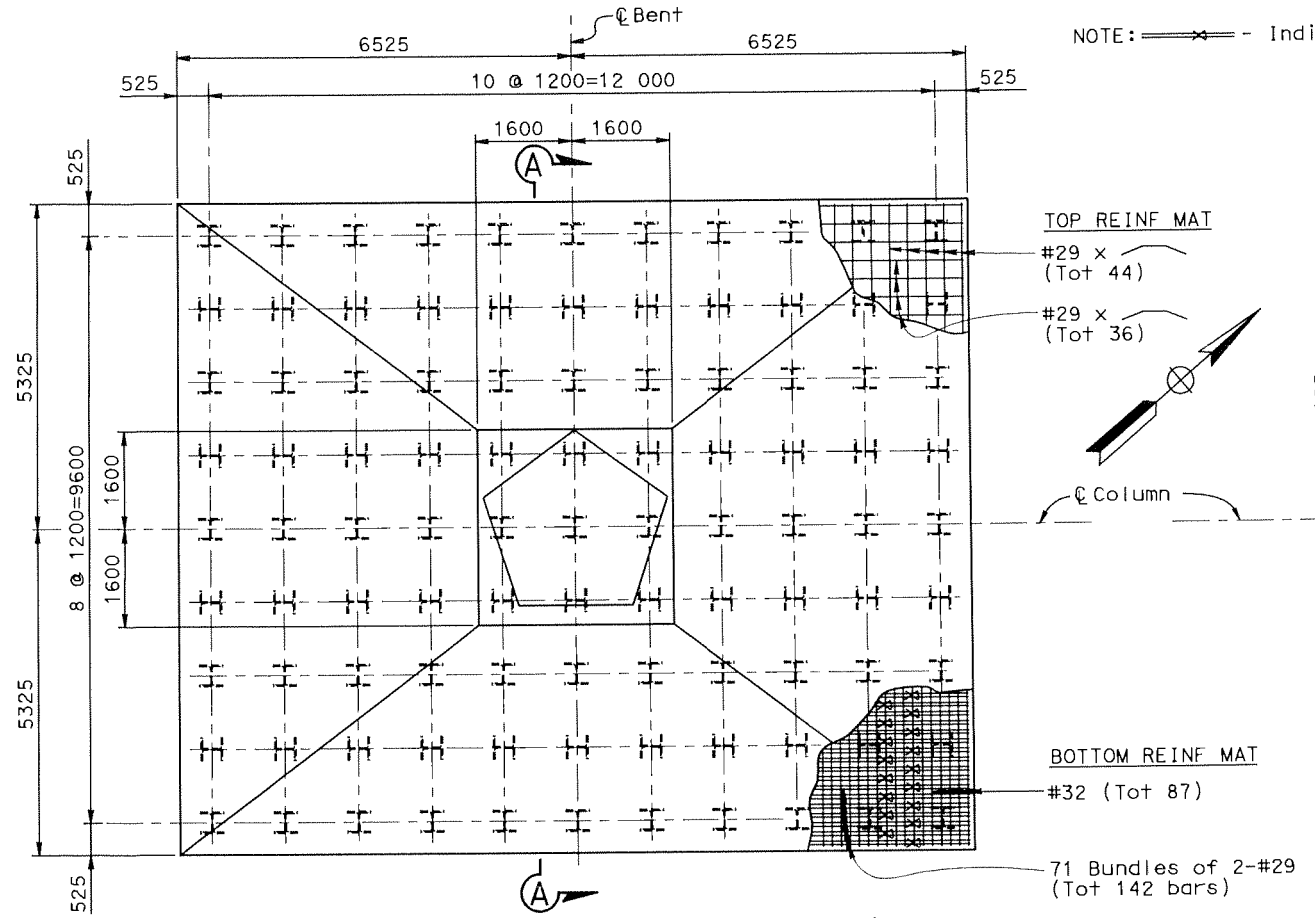

FOOTING PLAN - NORTH COLUMN
(Tot 99 piles)
1:60

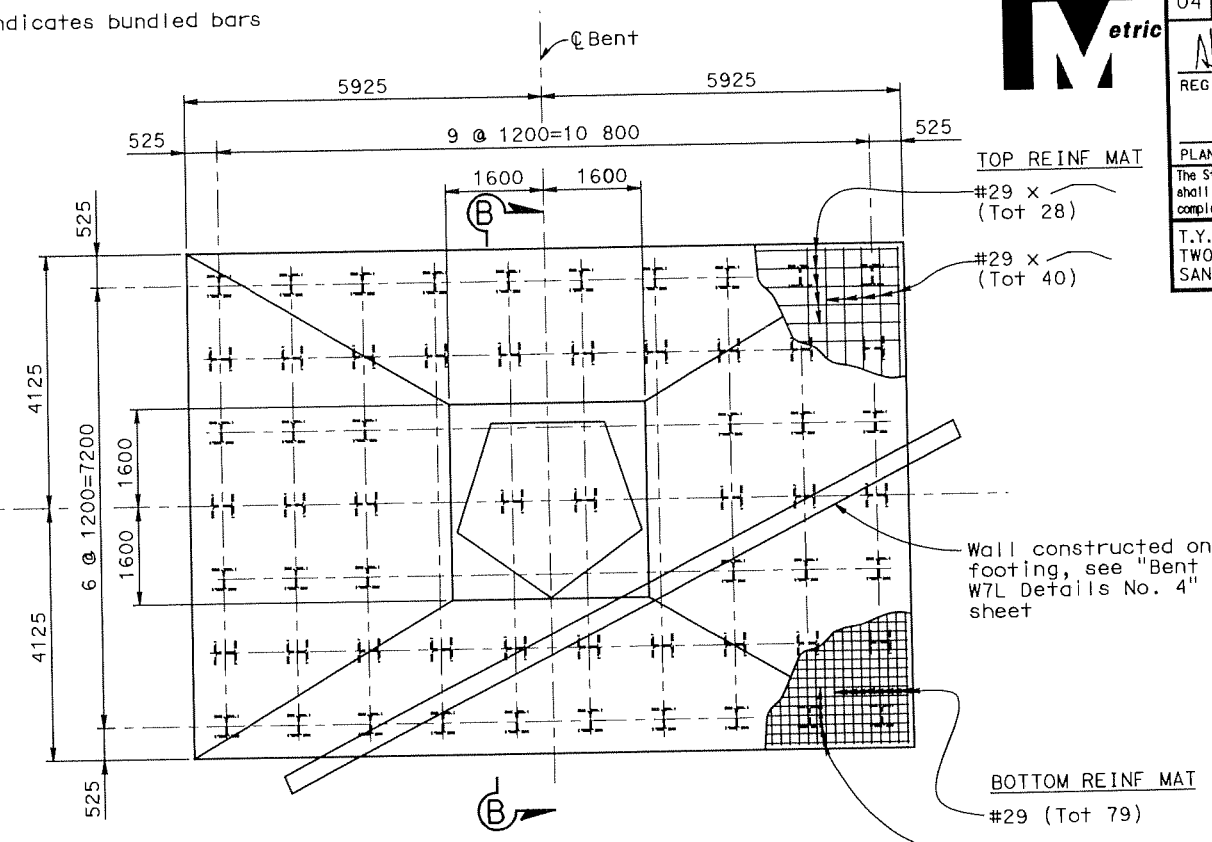

FOOTING PLAN - SOUTH COLUMN
(Tot 60 piles)
1:60

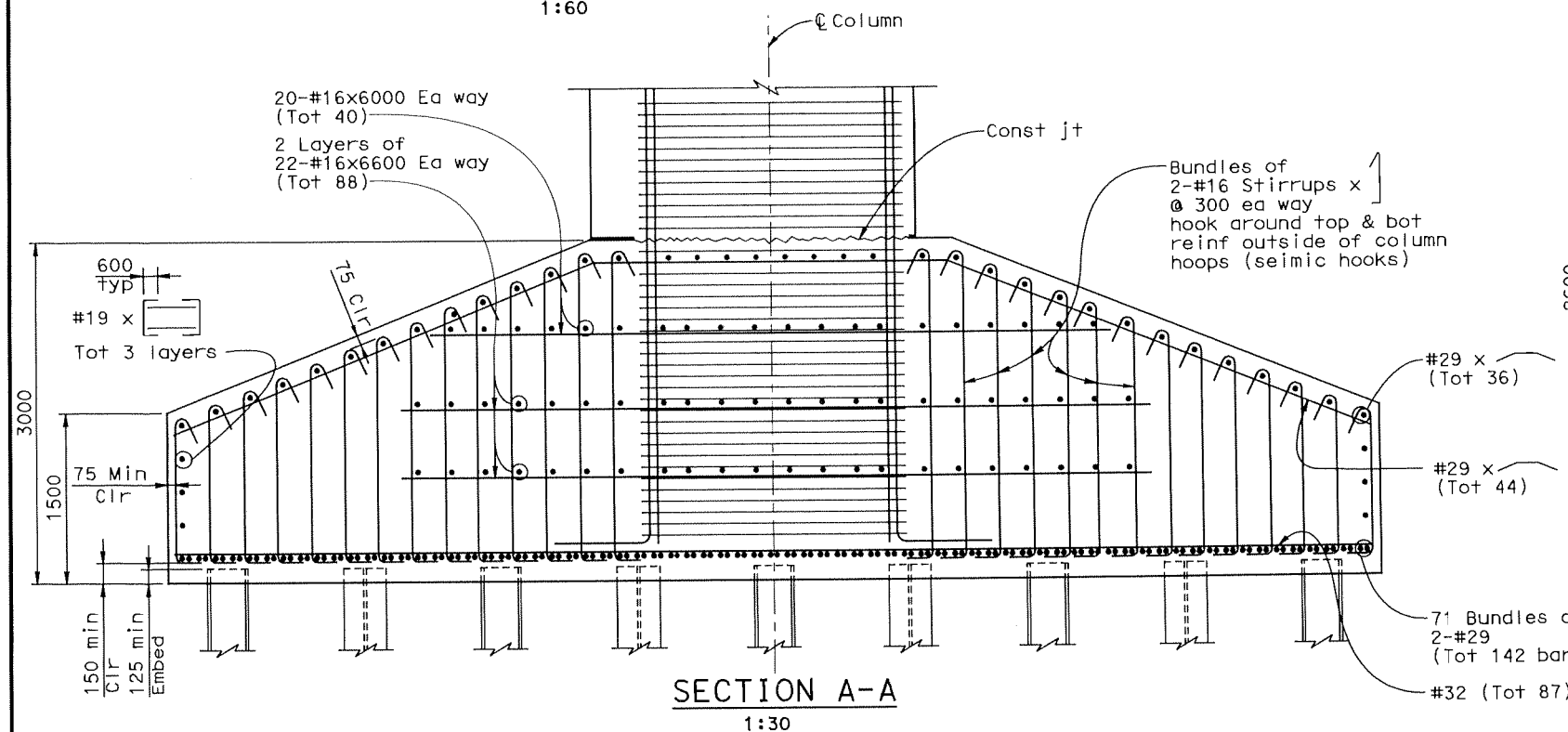

SECTION A-A
1:30

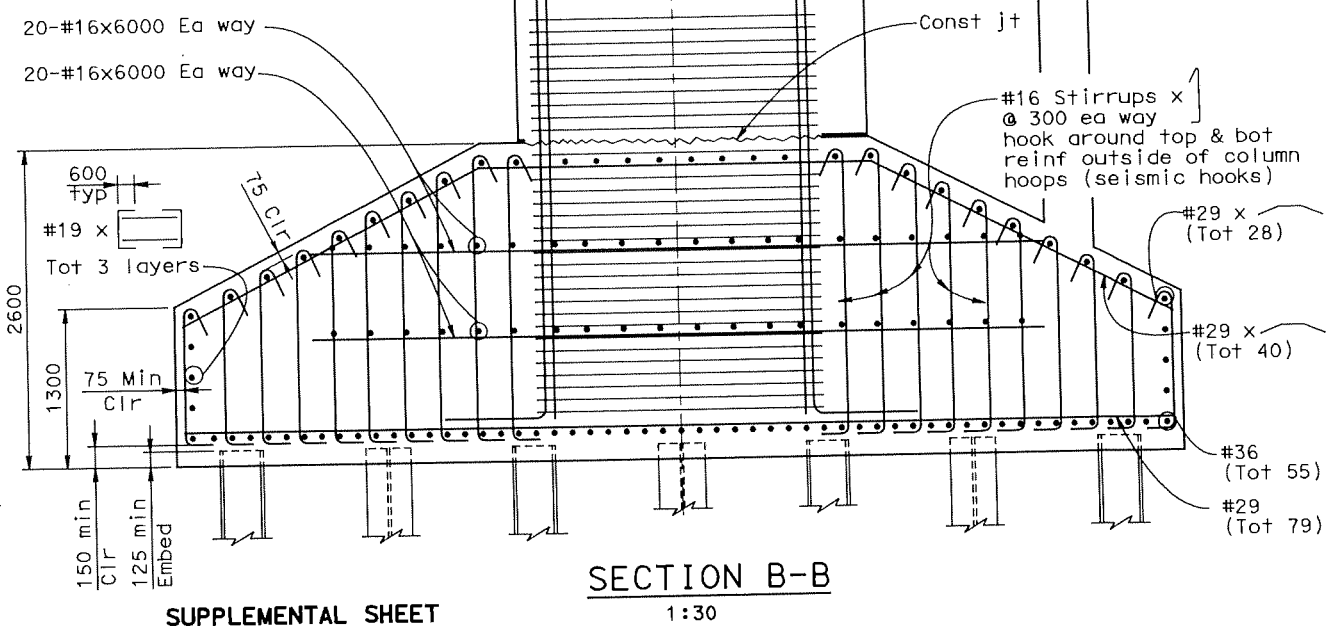

SECTION B-B
1:30

SUPPLEMENTAL SHEET

CONTRACT CHANGE ORDER NO. 75
SHEET 127 OF 136

ALL DIMENSIONS ARE IN MILLIMETERS UNLESS OTHERWISE SHOWN

SAN FRANCISCO OAKLAND BAY BRIDGE
EAST SPAN SEISMIC SAFETY PROJECT

YBI TRANSITION STRUCTURES
ADVANCE CONST PACKAGE NO. 2R0
BENT W7L DETAILS NO.3

DESIGN OVERSIGHT	JOHN MOOK, BERNARD CHAN, JUAN F. CARPIO	SIGN OFF DATE
DESIGN	BY Dodd	CHECKED Desai
DETAILS	BY van Ryn/Zucchi/Mai	CHECKED Jain
QUANTITIES	BY Liao	CHECKED E. Nichol

PREPARED FOR THE STATE OF CALIFORNIA
DEPARTMENT OF TRANSPORTATION

Jal Birdy
PROJECT ENGINEER

CU 04251
EA 0120S1

BRIDGE NO. 34-0006 L/R
KILOMETER POST 12.8

DISREGARD PRINTS BEARING EARLIER REVISION DATES →
REVISION DATES (PRELIMINARY STAGE ONLY): 11/14/06 | 11/27/06 | 11/29/06 | 5/29/07 | 5/30/07 | 2/14/03 | 7/2/06 | 8/28/06 | 10/31/06 | 11/06/06

SHEET 8 OF 17

ORIGINAL SCALE IN MILLIMETERS FOR REDUCED PLANS 0 10 20 30 40 50 60 70 80 90 100

FILE => p:\4141-06\CADD\TS\Final Const 3\Adv Const Pkg 2R0\eebnt18det.dgn

Rev. Date: 5-18-98

May 29, 2007

USERNAME => fsomson DATE PLOTTED => 5/29/2007 TIME PLOTTED => 11:39:13 AM

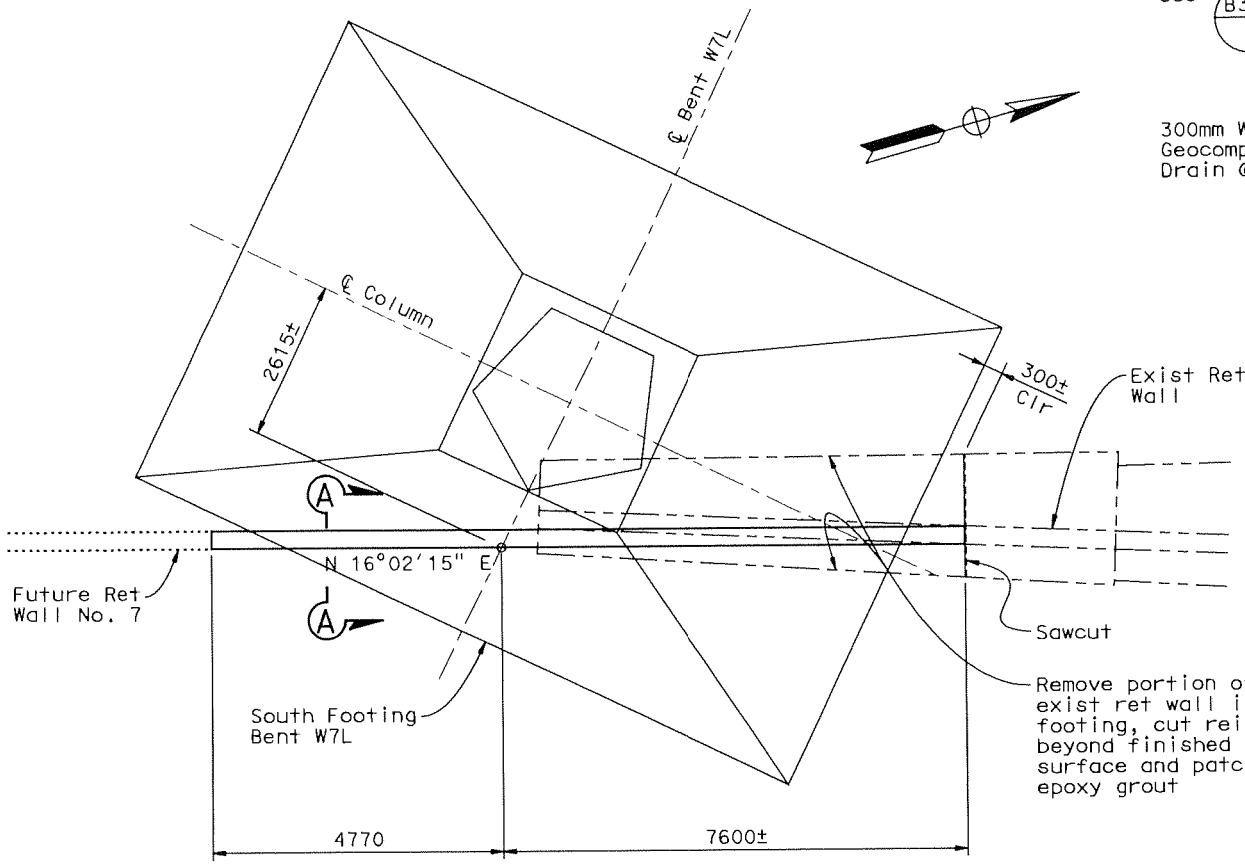

PLAN

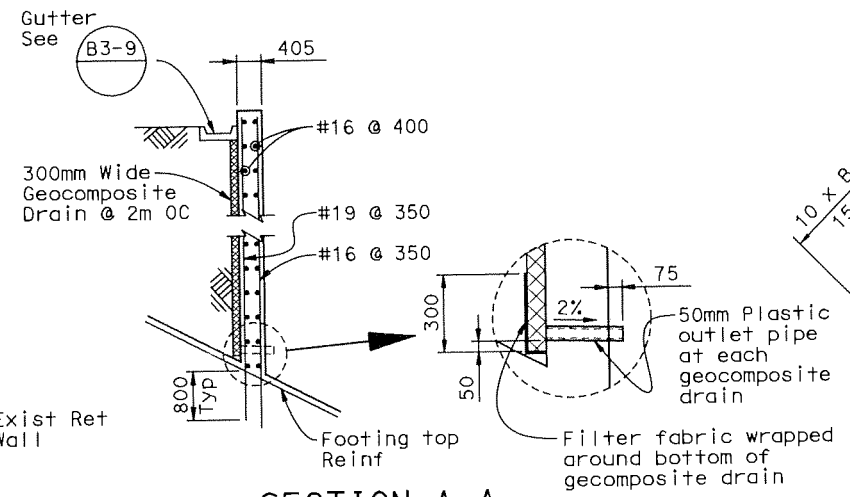

SECTION A-A

No Scale

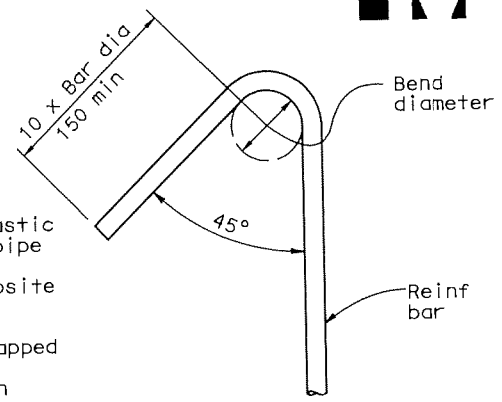

SEISMIC HOOK

No Scale

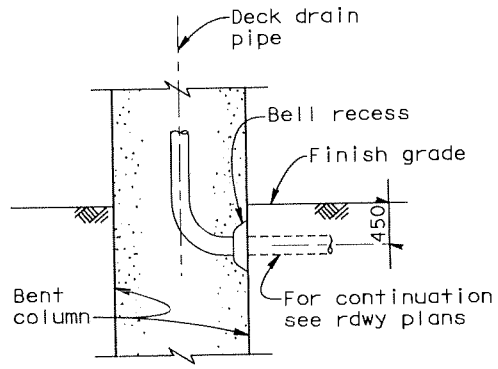

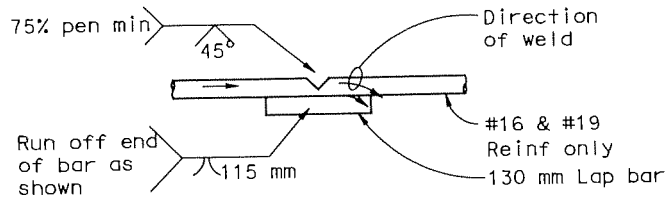

1. Butt weld to be made first
2. Butt weld to be made in flat or horizontal position
3. Lap bar to be centered on splice
4. Flare weld to be made in direction shown
5. Lap bar equal size to spiral bar

VEE GROOVE WELDED SPLICE

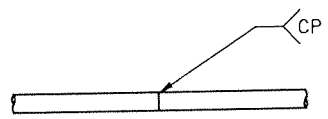

Individual hoops, made continuous with 100% penetration welds, may be substituted for spirals, Hoops shall be same size,spacing,and material as spiral

BUTT WELDED CONTINUOUS HOOP OR SPIRAL

Note: All column spiral and hoop splices shall be ultimate butt splices, see Special Provisions.

COLUMN SPIRAL AND HOOP SPLICE DETAILS

No Scale

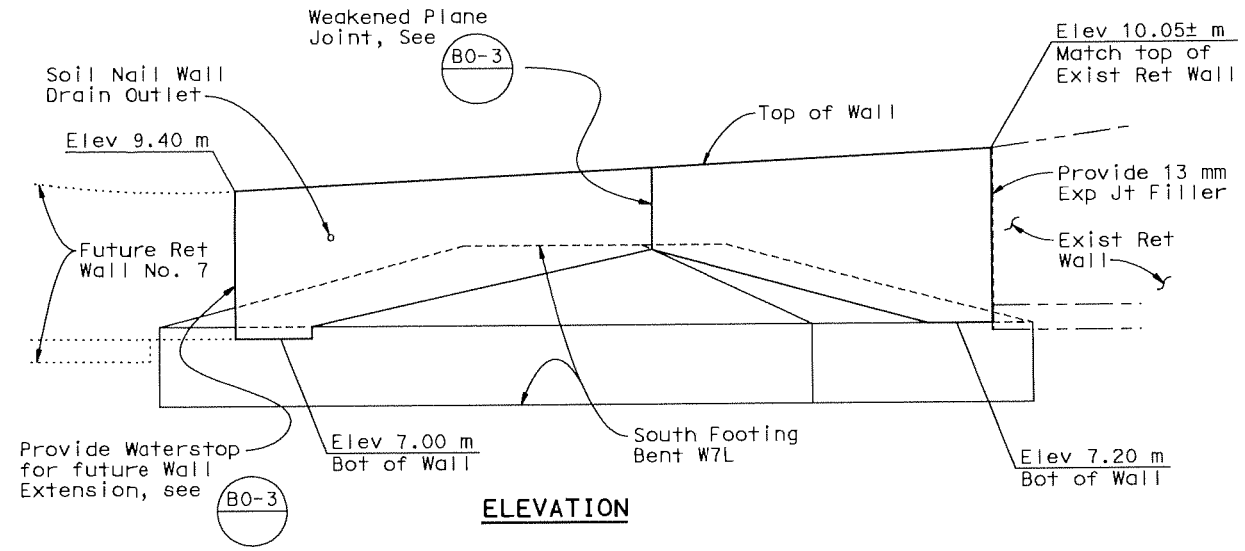

ELEVATION

WALL AT SOUTH FOOTING BENT W7L

1:60

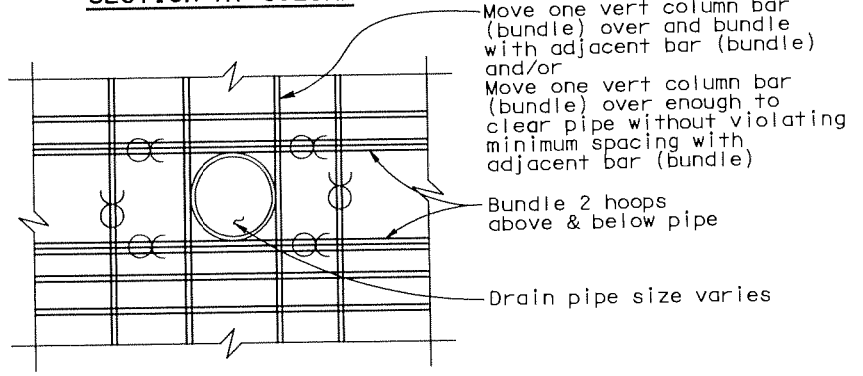

SECTION AT COLUMN

PART ELEVATION

DECK DRAIN PIPE OUTLET AT COLUMNS

(For details not shown see B7-6)

No Scale

SUPPLEMENTAL SHEET

CONTRACT CHANGE ORDER NO. 75

SHEET 128 OF 136

ALL DIMENSIONS ARE IN MILLIMETERS UNLESS OTHERWISE SHOWN

DIST.	COUNTY	ROUTE	KILOMETER POST TOTAL PROJECT	SHEET NO.	TOTAL SHEETS
04	SF	80	12.6/13.2	25	33

Caltrans Metric

REGISTERED ENGINEER - CIVIL

A.L. ELY No. 18880 Exp. 6-30-07 CIVIL

REGISTERED PROFESSIONAL ENGINEER STATE OF CALIFORNIA

PLANS APPROVAL DATE

The State of California or its officers or agents shall not be responsible for the accuracy or completeness of electronic copies of this plan sheet.

T.Y. LIN / MOFFATT & NICHOL
TWO HARRISON STREET
SAN FRANCISCO, CA 94105

DESIGN OVERSIGHT		DESIGN BY Dodd	CHECKED Desai
JOHN MOOK, BERNARD CHAN, JUAN F. CARPIO		DETAILS BY van Ryn/Zucchi/Mai	CHECKED Jain
SIGN OFF DATE		QUANTITIES BY Liao	CHECKED E. Nichol

PREPARED FOR THE STATE OF CALIFORNIA DEPARTMENT OF TRANSPORTATION

Jal Birdy
PROJECT ENGINEER

BRIDGE NO. 34-0006 L/R
KILOMETER POST 12.8

CU 04251
EA 0120S1

DISREGARD PRINTS BEARING EARLIER REVISION DATES

REVISION DATES (PRELIMINARY STAGE ONLY): 11/17/06 | 11/27/06 | 11/28/06 | 5/29/07 | 5/30/07 | 2/21/07 | 7/27/06 | 8/25/06 | 10/31/06 | 11/20/06

SAN FRANCISCO OAKLAND BAY BRIDGE
EAST SPAN SEISMIC SAFETY PROJECT

YBI TRANSITION STRUCTURES

ADVANCE CONST PACKAGE NO. 2RO

BENT W7L DETAILS NO.4

SHEET 9 OF 17

Rev. Date: 5-18-98

ORIGINAL SCALE IN MILLIMETERS FOR REDUCED PLANS 0 10 20 30 40 50 60 70 80 90 100

FILE => p:\4141-06\CADD\TS\Final Const 3\Adv Const Pkg 2RO\eebnt18adet.dgn

May 29, 2007

TIME PLOTTED => 11:38:54 AM

DATE PLOTTED => 5/29/2007

USERNAME => fsamson

DIST.	COUNTY	ROUTE	KILOMETER POST TOTAL PROJECT	SHEET NO.	TOTAL SHEETS
04	SF	80	12.6/13.2	26	33

Caltrans Metric

REGISTERED ENGINEER - CIVIL

PLANS APPROVAL DATE

The State of California or its officers or agents shall not be responsible for the accuracy or completeness of electronic copies of this plan sheet.

REGISTERED PROFESSIONAL ENGINEER A.L. ELY No. 18880 Exp. 6-30-07 CIVIL STATE OF CALIFORNIA

T.Y. LIN / MOFFATT & NICHOL
TWO HARRISON STREET
SAN FRANCISCO, CA 94105

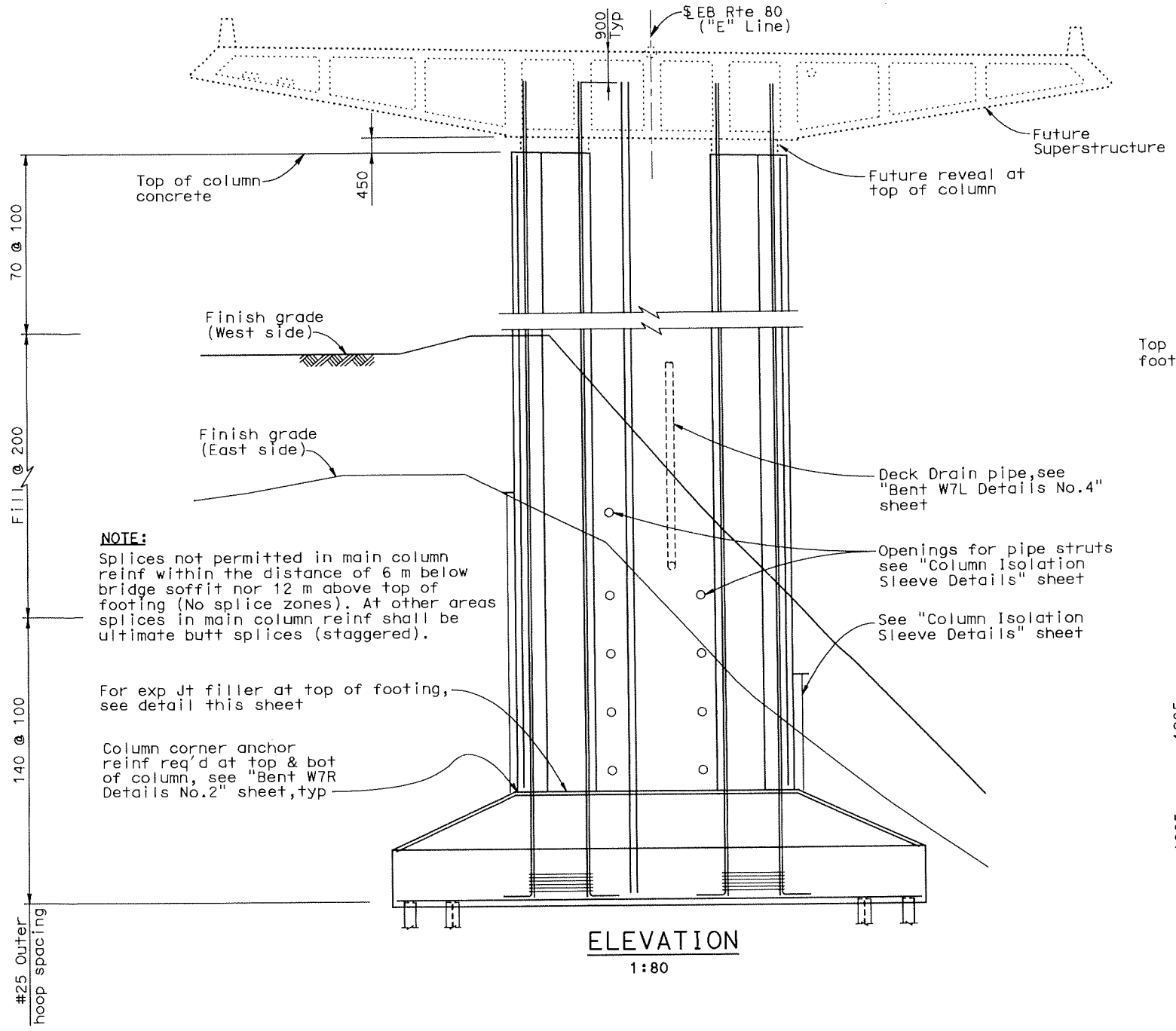

NOTE:
Splices not permitted in main column reinf within the distance of 6 m below bridge soffit nor 12 m above top of footing (No splice zones). At other areas splices in main column reinf shall be ultimate butt splices (staggered).

ELEVATION
1:80

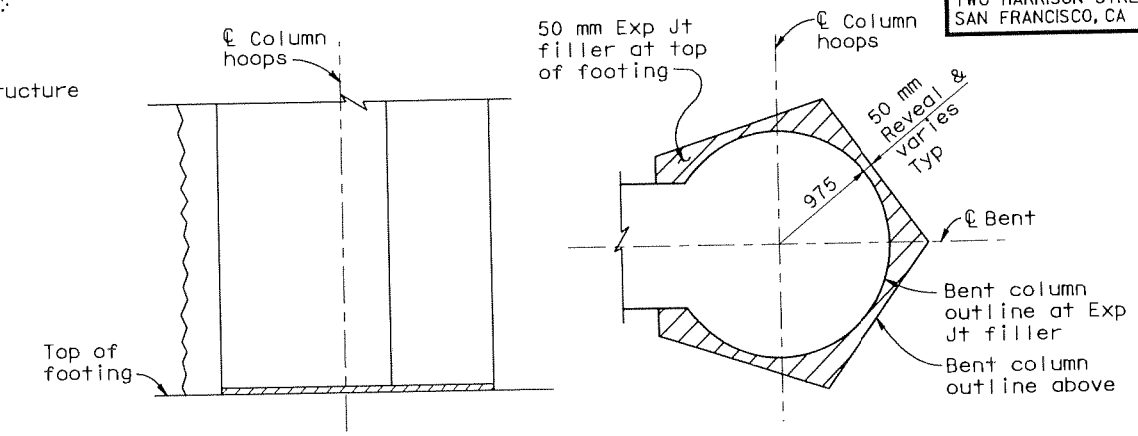

ELEVATION PLAN

EXPANSION JOINT FILLER AT TOP OF FOOTING
NO SCALE

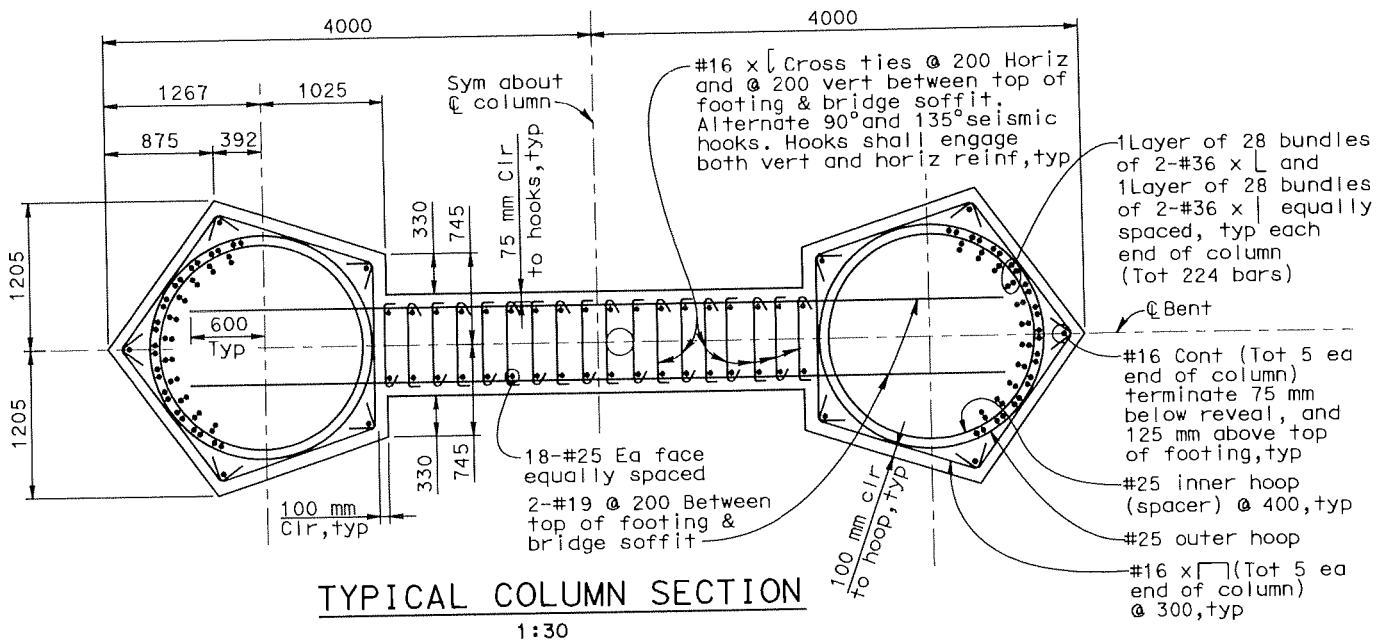

TYPICAL COLUMN SECTION
1:30

SUPPLEMENTAL SHEET

CONTRACT CHANGE ORDER NO. 75
SHEET 129 OF 136

ALL DIMENSIONS ARE IN MILLIMETERS UNLESS OTHERWISE SHOWN

SAN FRANCISCO OAKLAND BAY BRIDGE
EAST SPAN SEISMIC SAFETY PROJECT

YBI TRANSITION STRUCTURES

ADVANCE CONST PACKAGE NO. 2RO

BENT W7R DETAILS NO.1

DESIGN OVERSIGHT	DESIGN	BY Darrah/Shangkuan	CHECKED Ahn
JOHN MOOK, BERNARD CHAN, JUAN F. CARPIO	DETAILS	BY van Ryn/Zucchi/Mai	CHECKED Jain
SIGN OFF DATE	QUANTITIES	BY Liao	CHECKED E. Nichol

PREPARED FOR THE STATE OF CALIFORNIA DEPARTMENT OF TRANSPORTATION

Jal Birdy
PROJECT ENGINEER

BRIDGE NO. 34-0006 L/R
KILOMETER POST 12.8

CU 04251
EA 0120S1

DISREGARD PRINTS BEARING EARLIER REVISION DATES

REVISION DATES (PRELIMINARY STAGE ONLY) 11/14/06 11/27/06 11/29/06 5/29/07 5/10/02 2/14/03 7/3/06 8/18/06 10/31/06 11/10/06

SHEET 10 OF 17

Rev. Date: 5-18-98

ORIGINAL SCALE IN MILLIMETERS FOR REDUCED PLANS 0 10 20 30 40 50 60 70 80 90 100

FILE => p:\4141-06\CADD\TS\Final Const 3\Adv Const Pkg 2RO\eebnt38det.dgn

May 29, 2007

USERNAME => fsamson DATE PLOTTED => 5/29/2007 TIME PLOTTED => 11:39:32 AM

DIST.	COUNTY	ROUTE	KILOMETER POST TOTAL PROJECT	SHEET NO.	TOTAL SHEETS
04	SF	80	12.6/13.2	27	33

Caltrans Metric

REGISTERED ENGINEER - CIVIL

PLANS APPROVAL DATE

The State of California or its officers or agents shall not be responsible for the accuracy or completeness of electronic copies of this plan sheet.

REGISTERED PROFESSIONAL ENGINEER A.L. ELY No. 18880 Exp. 6-30-07 CIVIL STATE OF CALIFORNIA

T.Y. LIN / MOFFATT & NICHOL
TWO HARRISON STREET
SAN FRANCISCO, CA 94105

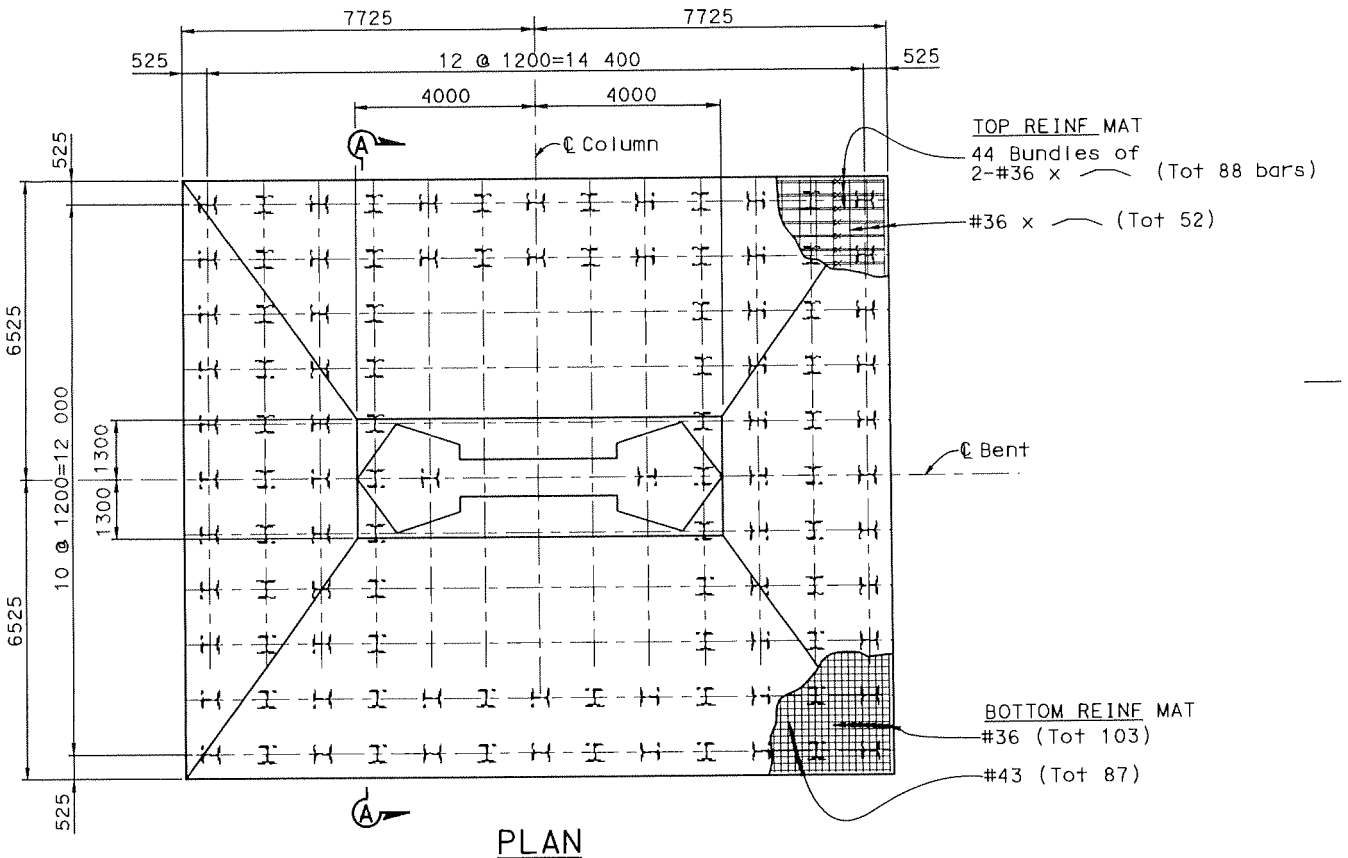

PLAN
(Tot 110 piles)
1:80

NOTE:
Indicates bundled bars

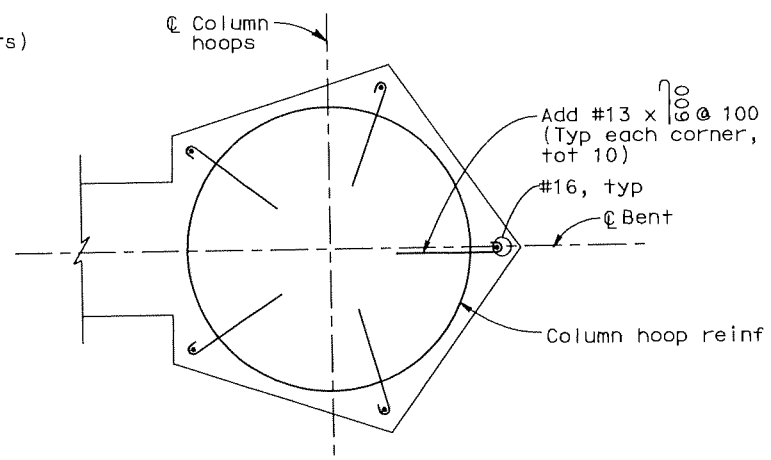

DETAIL B - COLUMN CORNER ANCHOR REINFORCEMENT
(Column corner anchor reinf to be provided in regions within 3000 mm of bridge soffit or top of footing)
No Scale

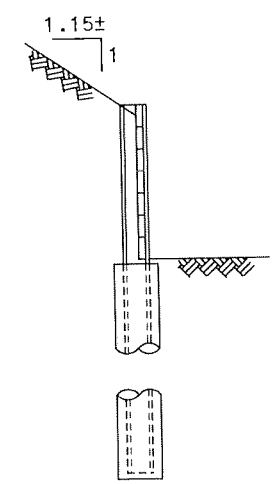

SECTION C-C

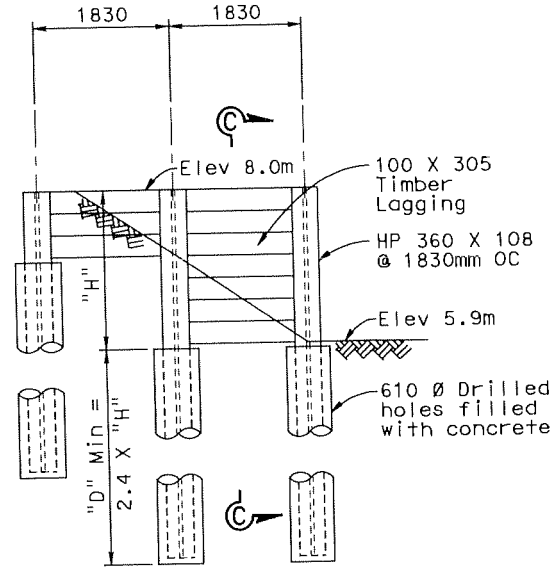

ELEVATION

SOLDIER PILE WALL
For location, see "Excavation Plan at Bent W7" sheet
1:50

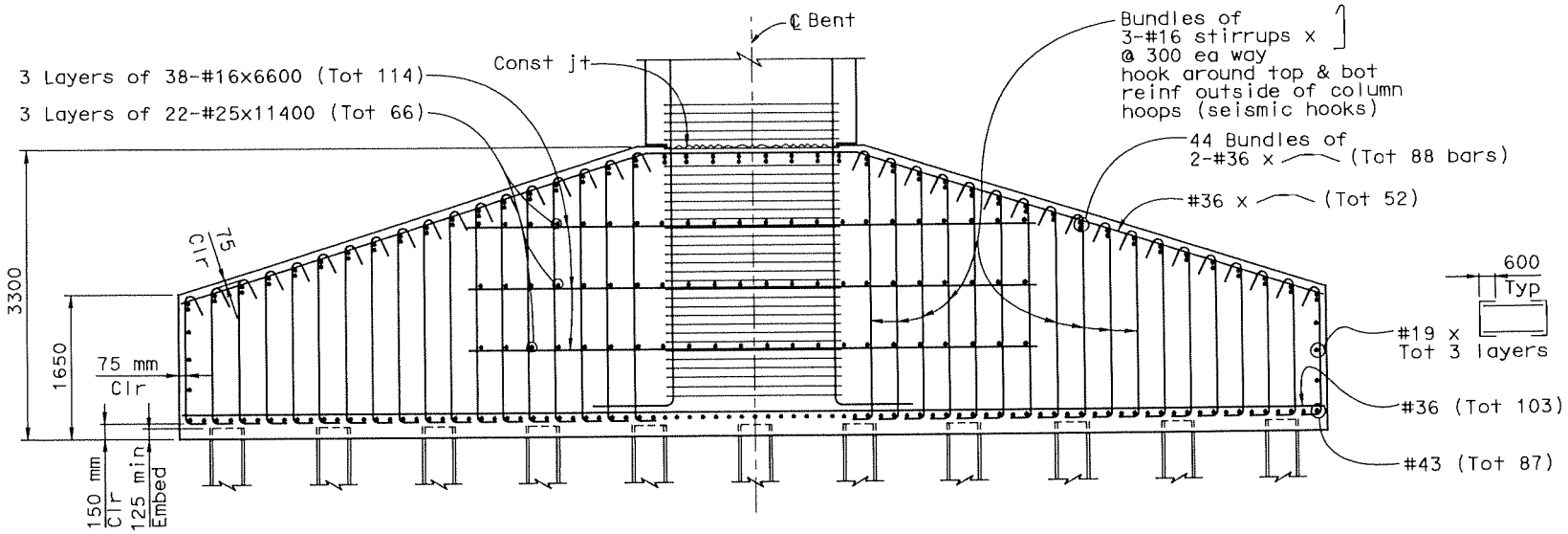

SECTION A-A
1:40

SUPPLEMENTAL SHEET

CONTRACT CHANGE ORDER NO. 75
SHEET 130 OF 136

ALL DIMENSIONS ARE IN MILLIMETERS UNLESS OTHERWISE SHOWN

SAN FRANCISCO OAKLAND BAY BRIDGE
EAST SPAN SEISMIC SAFETY PROJECT

YBI TRANSITION STRUCTURES

ADVANCE CONST PACKAGE NO. 2R0

BENT W7R DETAILS NO.2

DESIGN OVERSIGHT	DESIGN	BY Dodd	CHECKED Desai	PREPARED FOR THE STATE OF CALIFORNIA DEPARTMENT OF TRANSPORTATION	Jal Birdy	BRIDGE NO. 34-0006 L/R
JOHN MOOK, BERNARD CHAN, JUAN F. CARPIO	DETAILS Desai	BY van Ryn/Zucchi/Mai	CHECKED Jain		PROJECT ENGINEER	KILOMETER POST 12.8
SIGN OFF DATE	QUANTITIES	BY Liao	CHECKED E. Nichol			

Rev. Date: 5-18-98

ORIGINAL SCALE IN MILLIMETERS FOR REDUCED PLANS 0 10 20 30 40 50 60 70 80 90 100

CU 04251
EA 0120S1

DISREGARD PRINTS BEARING EARLIER REVISION DATES

REVISION DATES (PRELIMINARY STAGE ONLY) 11/14/06 11/27/06 11/29/06 5/29/07 5/30/02 2/14/03 7/3/06 8/14/06 10/11/06 11/10/06

SHEET 11 OF 17

FILE => p:\4141-06\CADD\TS\Final Const 3\Adv Const Pkg 2R0\eebnt39adet.dgn

May 29, 2007

USERNAME => fsamson DATE PLOTTED => 5/29/2007 TIME PLOTTED => 2:22:13 PM

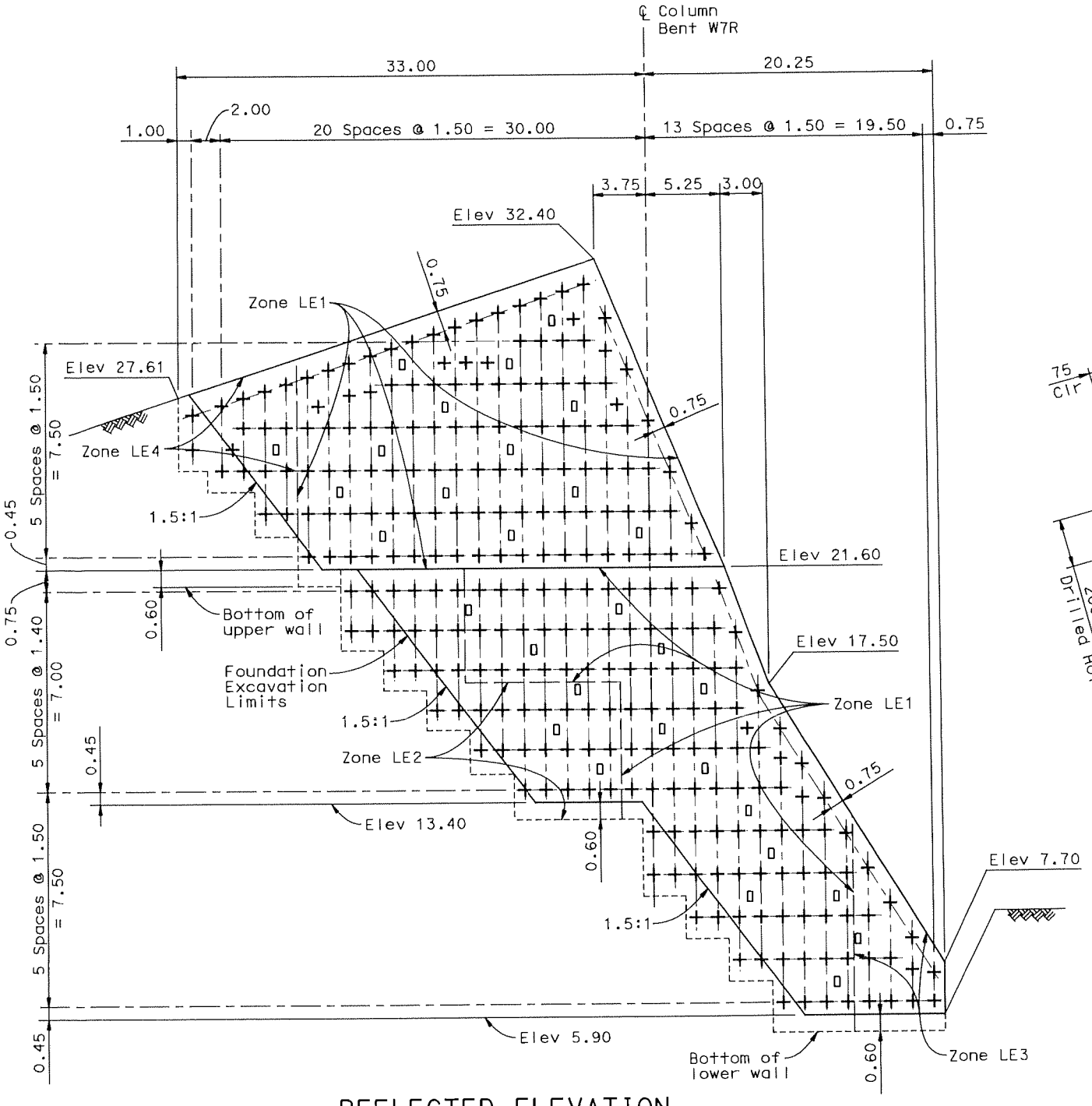

REFLECTED ELEVATION

HORIZ. 1:200
VERT. 1:100

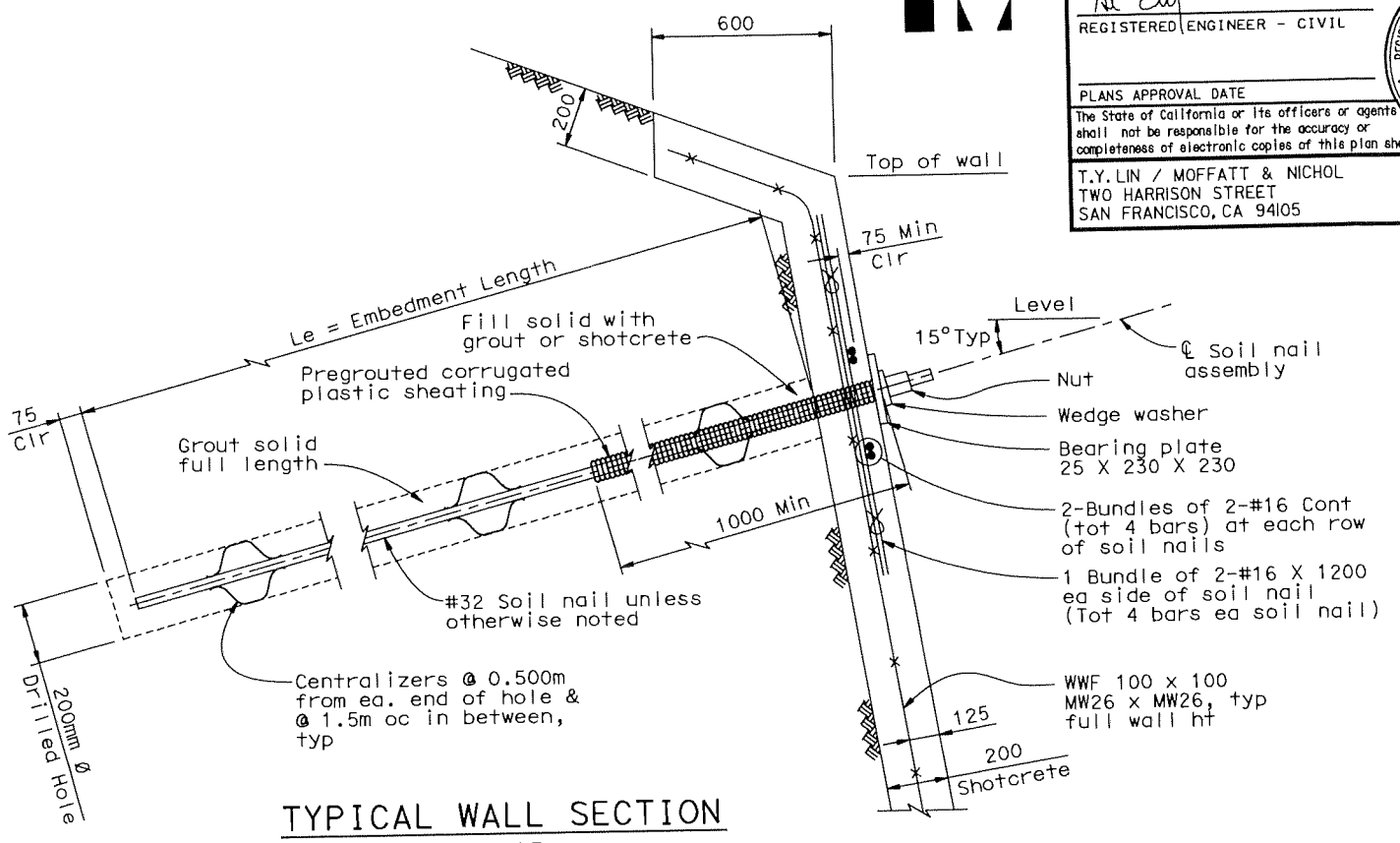

TYPICAL WALL SECTION

NO SCALE

SOIL NAIL WALL DESIGN DATA

Shotcrete: f'c = 22MPa

Soil Nails: ASTM Designation: A615/A615M, Grade 520
fy = 520MPa

Soil Parameters: Within 10m below top of wall

Unit Weight = 19.3 kN/m3
Soil Friction Angle: 33 degrees
Cohesion: 7.2 kPa
Ultimate Bond Stress = 70 kPa (between soil nail grout & drilled hole)

Other locations

Unit Weight = 19.6 kN/m3
Soil Friction Angle: 35 degrees
Cohesion: 12.0 kPa
Ultimate Bond Stress = 70 kPa (between soil nail grout & drilled hole)

Design Loads:
D = Dead Load
LL = Live Load
E = Lateral Earth Pressure
EQE = Seismic Earth Load = 0.20g

Safety Factors: Minimum Factor Of Safety, DL + LL + E = 1.35
DL + E + EQE = 1.10

Notes:

1. Exact location of test soil nails to be determined by Engineer in the field.
2. For weepholes at Soil Nail Wall, see "Soil Nail Wall Details No. 2" sheet.

+ Indicates location of soil nail assembly

▯ Indicates location of test soil nail

SOIL NAIL EMBEDMENT LENGTHS

LOCATION	Le METERS
Zone LE1	16.2
Zone LE2	13.2
Zone LE3	11.2
Zone LE4	10.2

ALL DIMENSIONS ARE IN METERS UNLESS OTHERWISE SHOWN

SUPPLEMENTAL SHEET

CONTRACT CHANGE ORDER NO. 75
SHEET 131 OF 136

DIST.	COUNTY	ROUTE	KILOMETER POST TOTAL PROJECT	SHEET NO.	TOTAL SHEETS
04	SF	80	12.6/13.2	28	33

Caltrans Metric

REGISTERED ENGINEER - CIVIL

PROFESSIONAL ENGINEER — A.L. ELY — No. 18880 — Exp. 6-30-07 — CIVIL — STATE OF CALIFORNIA

PLANS APPROVAL DATE

The State of California or its officers or agents shall not be responsible for the accuracy or completeness of electronic copies of this plan sheet.

T.Y. LIN / MOFFATT & NICHOL
TWO HARRISON STREET
SAN FRANCISCO, CA 94105

SAN FRANCISCO OAKLAND BAY BRIDGE
EAST SPAN SEISMIC SAFETY PROJECT

YBI TRANSITION STRUCTURES

ADVANCE CONST PACKAGE NO. 2R0

SOIL NAIL WALL DETAILS NO. 1

DESIGN OVERSIGHT					
JOHN MOOK, BERNARD CHAN, JUAN F. CARPIO	DESIGN	BY Desai	CHECKED Jain	PREPARED FOR THE STATE OF CALIFORNIA DEPARTMENT OF TRANSPORTATION	Jal Birdy, PROJECT ENGINEER
SIGN OFF DATE	DETAILS	BY van Ryn/Zucchi/Mai	CHECKED Jain		
Rev. Date: 5-18-98	QUANTITIES	BY Liao	CHECKED E. Nichol		

BRIDGE NO. 34-0006 L/R
KILOMETER POST 12.8
CU 04251
EA 012051

DISREGARD PRINTS BEARING EARLIER REVISION DATES →
REVISION DATES (PRELIMINARY STAGE ONLY): 11/14/06 | 11/27/06 | 11/29/06 | 5/29/07 | 5/30/02 | 2/14/03 | 7/21/06 | 8/30/06 | 10/27/06 | 11/20/06

SHEET 12 OF 17

ORIGINAL SCALE IN MILLIMETERS FOR REDUCED PLANS 0 10 20 30 40 50 60 70 80 90 100

FILE => p:\4141-06\CADD\TS\Final Const 3\Adv Const Pkg 2R0\ekmsc01.dgn

May 29, 2007

TIME PLOTTED => 11:40:20 AM
DATE PLOTTED => 5/29/2007
USERNAME => fsamson

DIST.	COUNTY	ROUTE	KILOMETER POST TOTAL PROJECT	SHEET NO.	TOTAL SHEETS
04	SF	80	12.6/13.2	29	33

Caltrans Metric

REGISTERED ENGINEER - CIVIL

PLANS APPROVAL DATE

REGISTERED PROFESSIONAL ENGINEER — A.L. ELY — No. 16880 — Exp. 6-30-07 — CIVIL — STATE OF CALIFORNIA

The State of California or its officers or agents shall not be responsible for the accuracy or completeness of electronic copies of this plan sheet.

T.Y. LIN / MOFFATT & NICHOL
TWO HARRISON STREET
SAN FRANCISCO, CA 94105

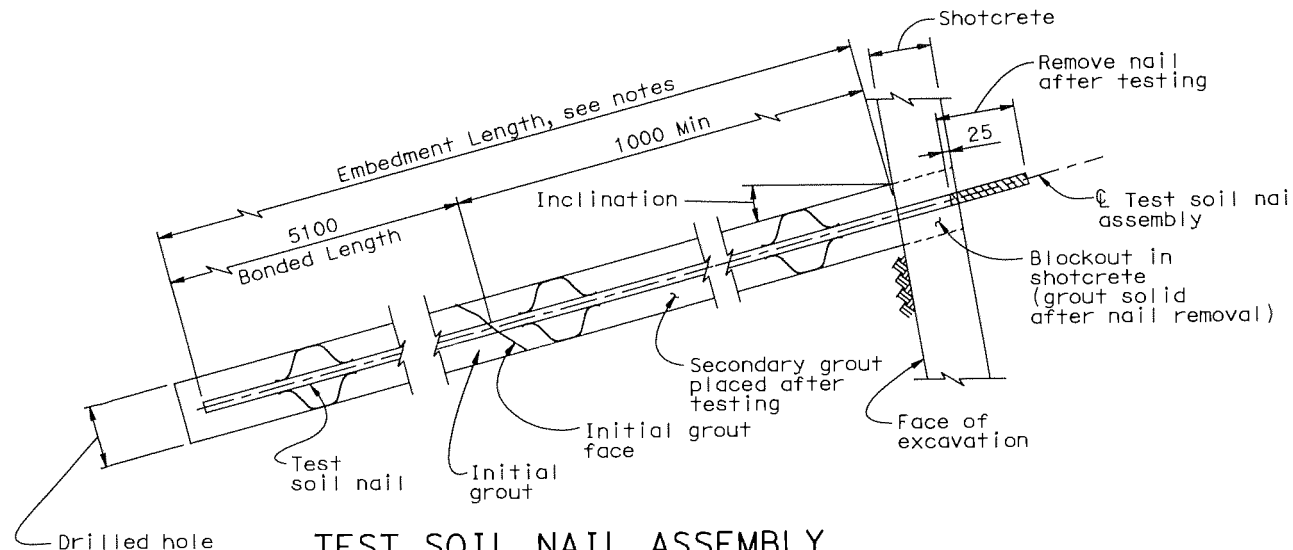

TEST SOIL NAIL ASSEMBLY

NO SCALE

TEST NAIL ASSEMBLY NOTES:

1. Diameter of test soil nail and drilled hole shall be same diameter as adjacent production nails.
2. Embedment length shall be 2/3 the embedment length of adjacent production soil nail assemblies, but not less than 6100 mm.
3. Total length of test soil nail assembly shall be embedment length plus the length required for jacking equipment.
4. The inclination of test soil nail assembly shall be the same as adjacent production soil nail assemblies.
5. The pullout test load for 200mm diameter drilled hole shall be 340 kN.
6. See other sheets for test nail locations. Number of test nails shall be not less than 5 percent of the total number of production nails and each row of each wall shall have at least two test nails. Provide at least 2 test nails for each diameter of production nail.

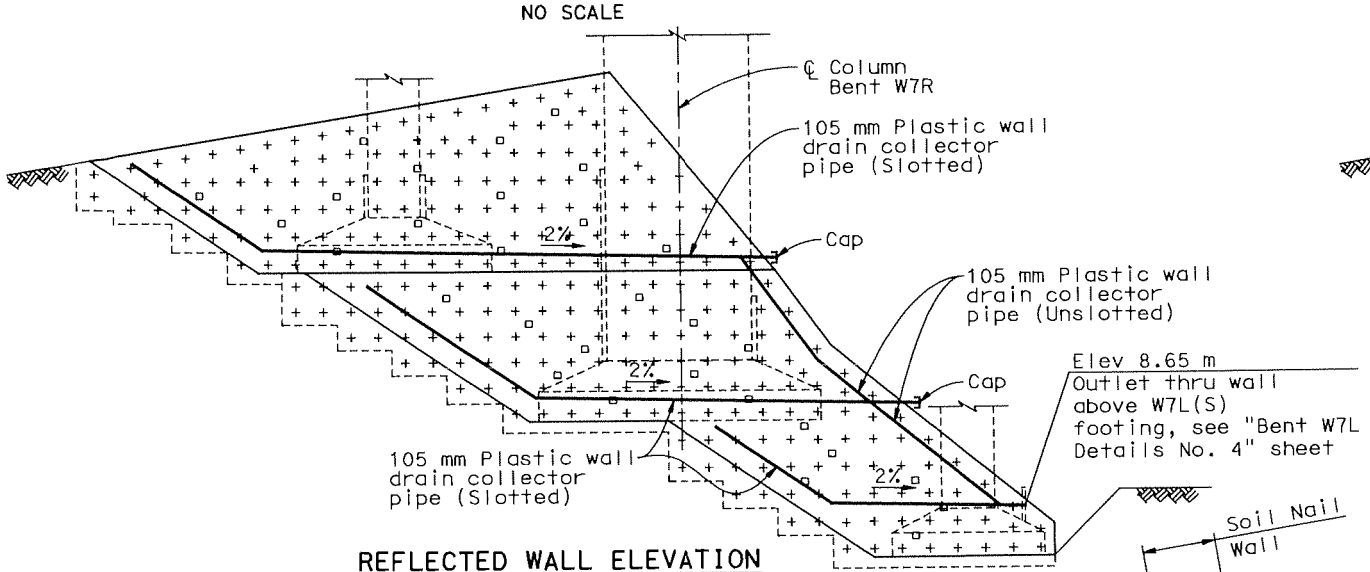

REFLECTED WALL ELEVATION
1:200

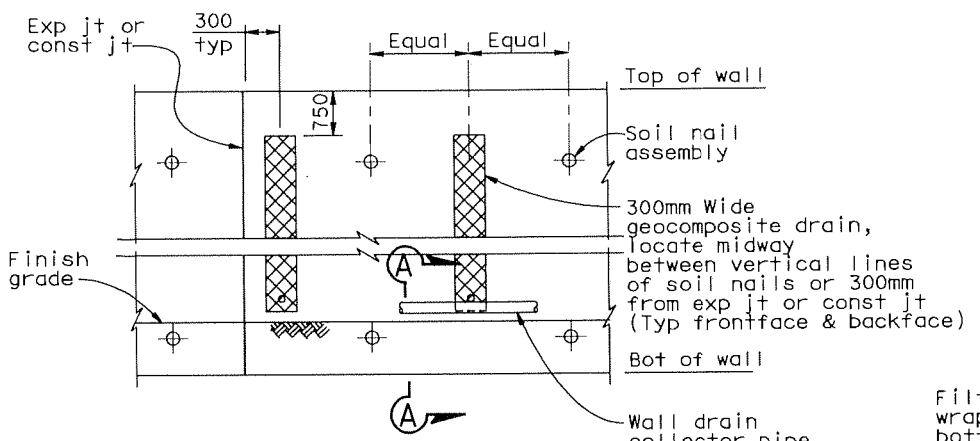

GEOCOMPOSITE DRAIN DETAIL
NO SCALE

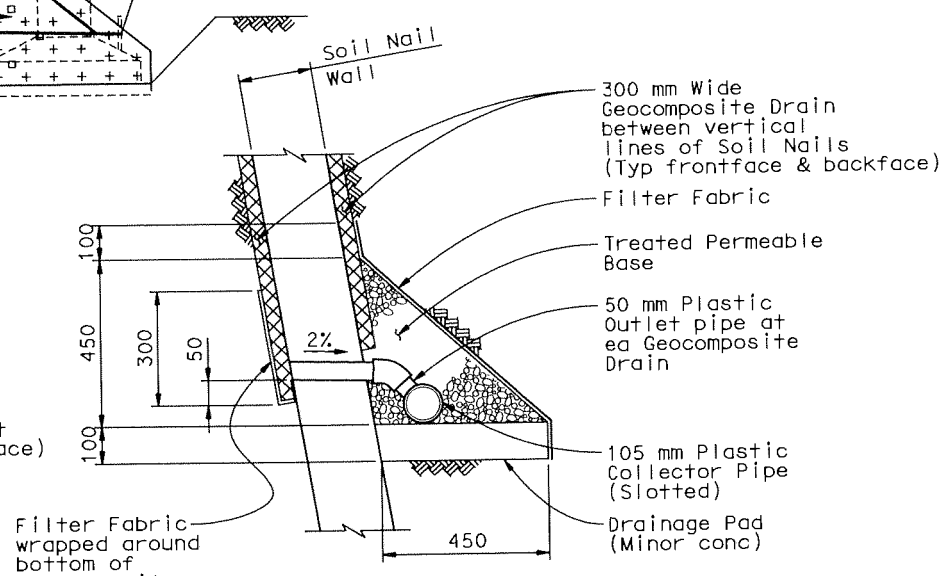

SECTION A-A
1:10

WALL DRAINAGE DETAILS

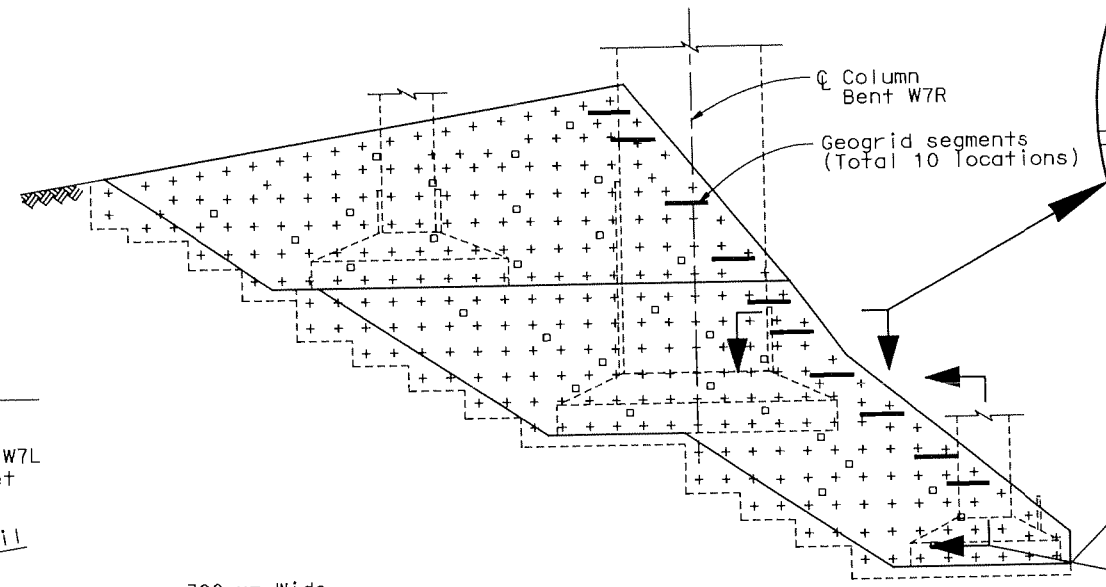

REFLECTED WALL ELEVATION

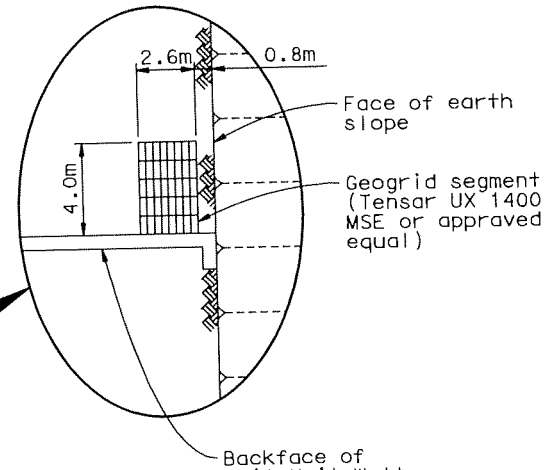

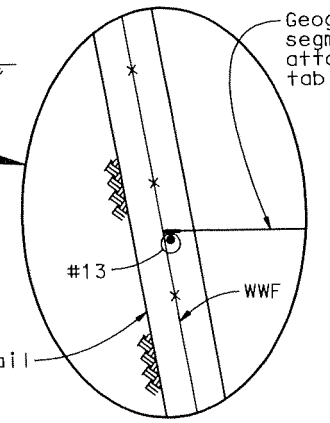

GEOGRID BACKFILL TIE DETAILS

1:200

SUPPLEMENTAL SHEET

CONTRACT CHANGE ORDER NO. 75
SHEET 132 OF 136

ALL DIMENSIONS ARE IN MILLIMETERS UNLESS OTHERWISE SHOWN

SAN FRANCISCO OAKLAND BAY BRIDGE
EAST SPAN SEISMIC SAFETY PROJECT

YBI TRANSITION STRUCTURES

ADVANCE CONST PACKAGE NO. 2RO

SOIL NAIL WALL DETAILS NO. 2

DESIGN OVERSIGHT	DESIGN	BY Desai	CHECKED Jain	PREPARED FOR THE STATE OF CALIFORNIA DEPARTMENT OF TRANSPORTATION	Jal Birdy PROJECT ENGINEER	BRIDGE NO. 34-0006 L/R	SHEET 13 OF 17
JOHN MOOK, BERNARD CHAN, JUAN F. CARPIO	DETAILS	BY van Ryn/Zucchi/Mai	CHECKED Jain			KILOMETER POST 12.8	
SIGN OFF DATE	QUANTITIES	BY Liao	CHECKED E. Nichol		CU 04251 EA 0120S1	DISREGARD PRINTS BEARING EARLIER REVISION DATES	REVISION DATES (PRELIMINARY STAGE ONLY) 11/04/06 11/27/06 11/29/06 5/29/07 5/30/07 2/14/03 7/2/06 8/14/06 10/17/06 11/06/06

Rev. Date: 5-18-98

ORIGINAL SCALE IN MILLIMETERS FOR REDUCED PLANS 0 10 20 30 40 50 60 70 80 90 100

FILE => p:\4141-06\CADD\TS\Final Const 3\Adv Const Pkg 2RO\ekmsc02.dgn

May 29, 2007

USERNAME => fsamson DATE PLOTTED => 5/29/2007 TIME PLOTTED => 11:41:03 AM

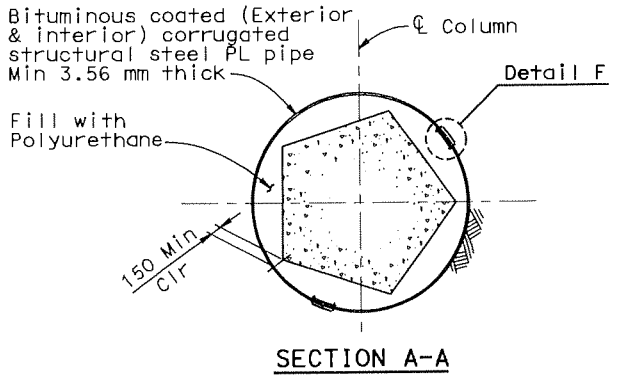

SECTION A-A

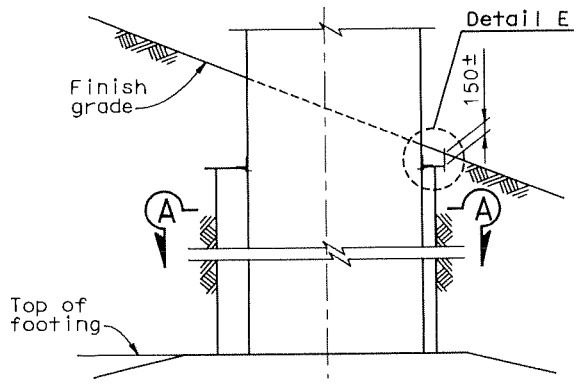

ELEVATION

ISOLATION SLEEVE NORTH COLUMN BENT W7L

1:60

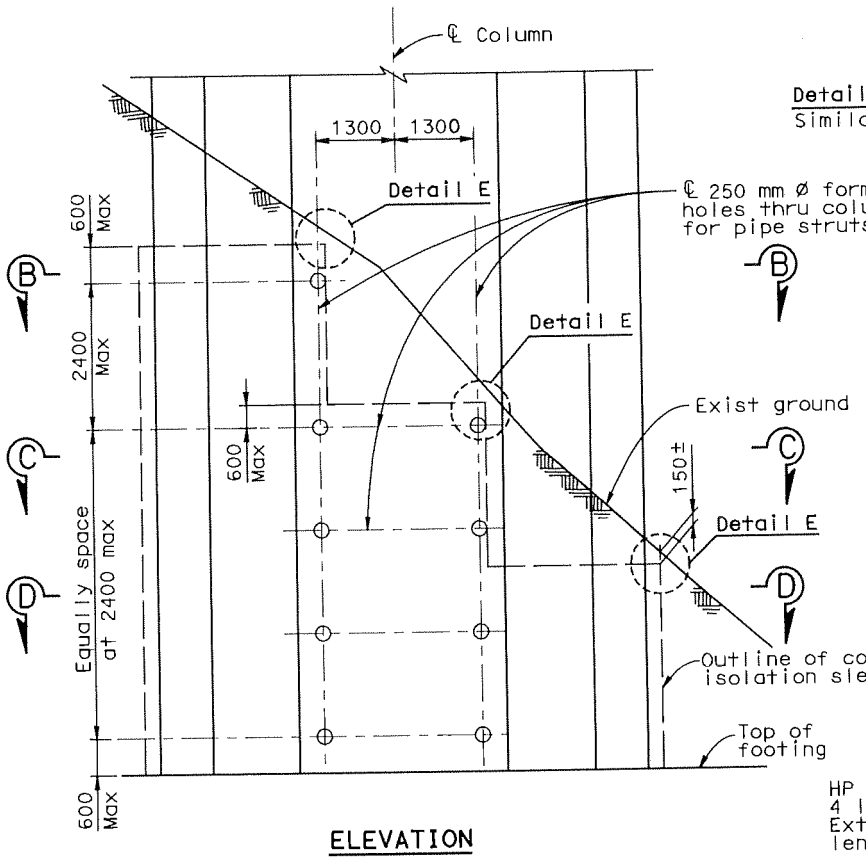

ELEVATION

ISOLATION SLEEVE BENT W7R

1:60

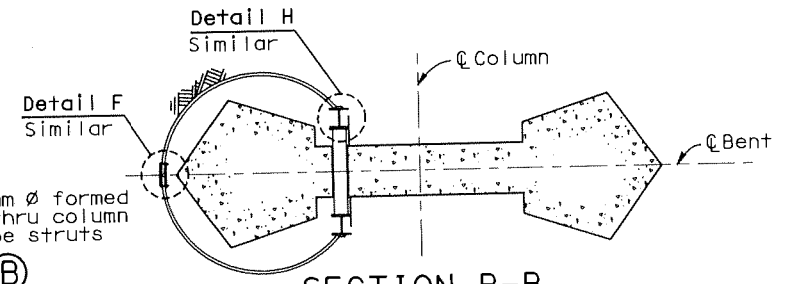

SECTION B-B

1:60

Note: For details not shown see Section D-D

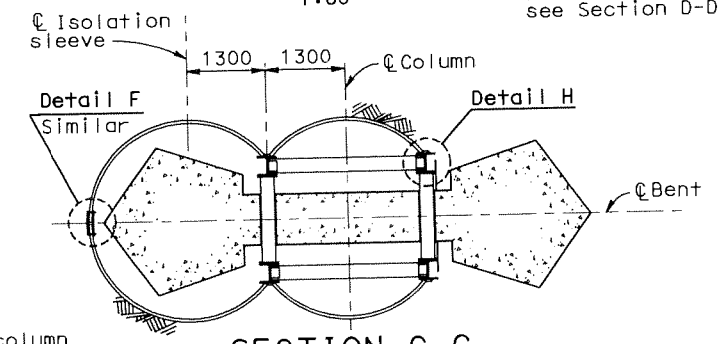

SECTION C-C

1:60

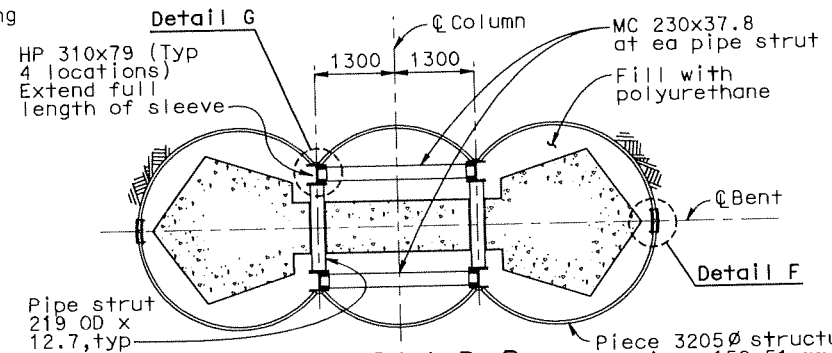

SECTION D-D

1:60

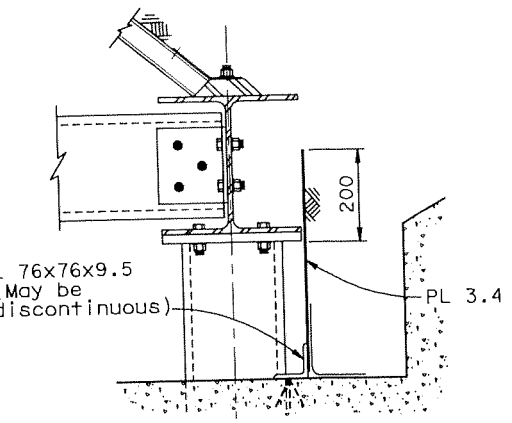

DETAIL H

Note: See Details E & G for details not shown

1:8

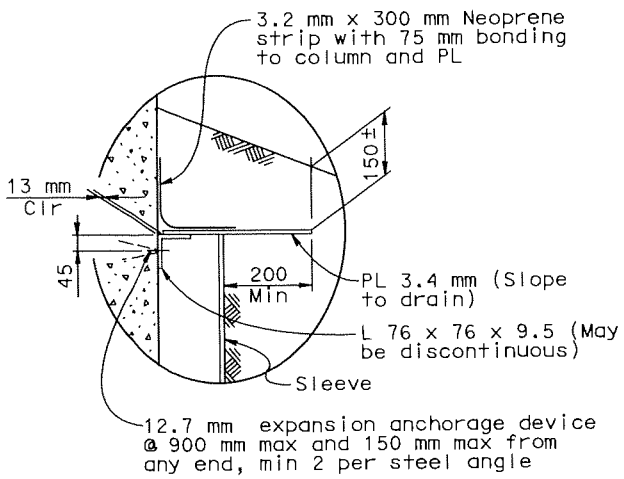

DETAIL E

No Scale

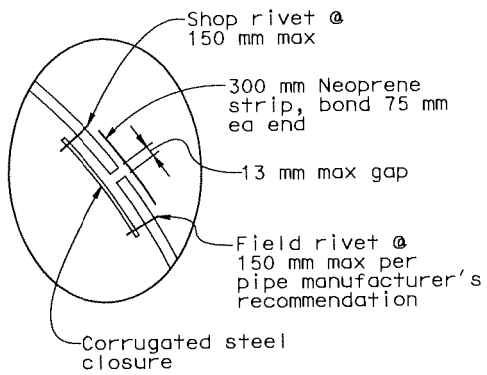

DETAIL F

No Scale

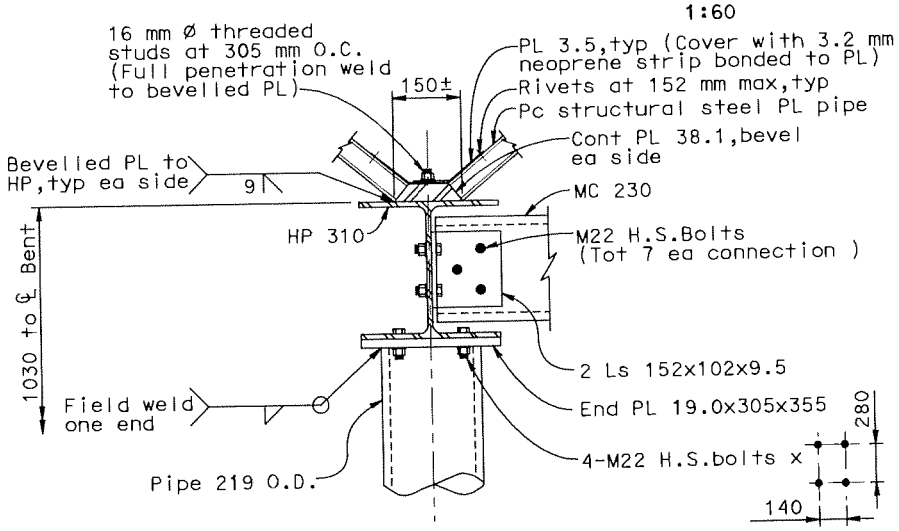

DETAIL G

1:8

Note: Structural plates and shapes for column isolation sleeves to be galvanized and bituminous coated.

SUPPLEMENTAL SHEET

CONTRACT CHANGE ORDER NO. 75
SHEET 133 OF 136

ALL DIMENSIONS ARE IN MILLIMETERS UNLESS OTHERWISE SHOWN

DIST.	COUNTY	ROUTE	KILOMETER POST TOTAL PROJECT	TOTAL SHEETS
04	SF	80	12.6/13.2	30	33

REGISTERED ENGINEER - CIVIL — A.L. ELY, No. 18880, Exp. 6-30-07, CIVIL, STATE OF CALIFORNIA

PLANS APPROVAL DATE

The State of California or its officers or agents shall not be responsible for the accuracy or completeness of electronic copies of this plan sheet.

T.Y.LIN / MOFFATT & NICHOL
TWO HARRISON STREET
SAN FRANCISCO, CA 94105

DESIGN OVERSIGHT: JOHN MOOK, BERNARD CHAN, JUAN F. CARPIO	DESIGN	BY Jain	CHECKED Desai	PREPARED FOR THE STATE OF CALIFORNIA DEPARTMENT OF TRANSPORTATION	Jal Birdy, PROJECT ENGINEER
SIGN OFF DATE	DETAILS	BY van Ryn/Zucchi/Mai	CHECKED Jain		
	QUANTITIES	BY Liao	CHECKED E. Nichol		

BRIDGE NO. 34-0006 L/R
KILOMETER POST 12.8
CU 04251
EA 0120S1

SAN FRANCISCO OAKLAND BAY BRIDGE EAST SPAN SEISMIC SAFETY PROJECT

YBI TRANSITION STRUCTURES

ADVANCE CONST PACKAGE NO. 2RO

COLUMN ISOLATION SLEEVE DETAILS

DISREGARD PRINTS BEARING EARLIER REVISION DATES

REVISION DATES (PRELIMINARY STAGE ONLY): 11/27/06 | 11/27/06 | 11/29/06 | 5/29/07 | 5/30/02 | 2/24/03 | 3/27/06 | 3/27/06 | 10/27/06 | 11/27/06

SHEET 14 OF 17

ORIGINAL SCALE IN MILLIMETERS FOR REDUCED PLANS 0 10 20 30 40 50 60 70 80 90 100

Rev. Date: 5-18-98

FILE => p:\4141-06\CADD\TS\Final Const 3\Adv Const Pkg 2RO\eecol01det.dgn

May 29, 2007

USERNAME => tsomson DATE PLOTTED => 5/29/2007 TIME PLOTTED => 11:40:03 AM

DIST	COUNTY	ROUTE	KILOMETER POST TOTAL PROJECT	SHEET NO	TOTAL SHEETS
04	SF	80	12.6/13.2	31	33

Caltrans Metric

Martha Kyrala 05/17/07
GEOTECHNICAL PROFESSIONAL

PLANS APPROVAL DATE

The State of California or its officers or agents shall not be responsible for the accuracy or completeness of electronic copies of this plan sheet.

REGISTERED PROFESSIONAL ENGINEER — MIKE KAPUSKAR — NO. GE 2564 EXP. 12-31-08 — GEOTECHNICAL — STATE OF CALIFORNIA

FUGRO-EARTH MECHANICS, J.V.
7750 Pardee Lane, Suite 120
Oakland, CA 94621

SOIL AND ROCK TYPES

Well graded GRAVEL (GW)
Poorly graded GRAVEL (GP)
GRAVEL with sand (GP or GW)
GRAVEL with clay (GP or GW)
Clayey GRAVEL (GC)
GRAVEL with silt (GP or GW)
Silty GRAVEL (GM)
Well graded SAND (SW)
Poorly graded SAND (SP)
SAND with gravel (SP or SW)
SAND with clay (SP-SC)
Clayey SAND (SC)
Silty SAND (SM)
SAND with silt (SP-SM)
Fat CLAY (CH)
Sandy fat CLAY (CH)
Lean CLAY (CL)
Sandy lean CLAY (CL)
Silty CLAY (CL-ML)
Elastic SILT (MH)
SILT (ML)
Sandy SILT (ML)
Clayey silt (ML/CL)
Highly plastic ORGANICS (OH)
Low plasticity ORGANICS (OL)
SANDSTONE (Rx)
SILTSTONE (Rx)
CLAYSTONE (Rx)
Interbedded Rock Strata (Rx)
PAVEMENT

SAMPLERS

- 76mm-OD, 72mm-ID Thin Walled Tube
- 67mm-OD, 64mm-ID* Thin Walled Osterberg Tube
- 83.5mm-OD, 54mm-ID Offshore Liner
- 76mm-OD, 60mm-ID Modified California Liner
- 61mm-OD, 35mm-ID SPT Split Spoon Sampler
- Rock Core (break symbol represents recovery (%))

* A variable-OD, 64-mm-ID tapered driven tube was used to sample extreme sand, gravel and rock.

STANDARD PENETRATION TEST (SPT) AND MODIFIED CALIFORNIA (MC) LINER SAMPLERS

Samplers were driven with a 63.5 kg hammer dropped approximately 760 mm.

20	Number of blows to produce 305 mm of penetration after the initial 15 cm of seating.
8/230mm	Number of blows required to produce the indicated penetration after an initial 15 cm seating.
R=50/5cm	50 blows produced the indicated penetration during the initial 15 cm interval.

Note: In rock coring interval recovery(%)-ROD are shown in the Blow Count column.

TUBE AND OFFSHORE LINER SAMPLERS

WOH	Offshore Liner sample advanced with the weight of an 83 kg hammer.
PUSH or SAVE	Pushed thin-walled 76mm-OD-tube.
18/600mm	Number of blows required to produce the indicated penetration using a 64mm-ID-tube sampler. The sampler was driven with an 80 kg downhole hammer dropped approximately 1.8 m.

CLASSIFICATION TESTS BLOW COUNTS AND ROCK QUALITY

- PERCENT PASSING #200 SIEVE
- WATER CONTENT (%)
- UNIT WEIGHT (kN/m³)
- THEORETICAL UNIT WEIGHT (kN/m³)
- PLASTIC LIMIT / LIQUID LIMIT
- EQUIVALENT SPT BLOW COUNT = (MC BLOWCOUNT/1.4) OR SPT BLOWCOUNT
- ROCK QUALITY DESIGNATION (RQD)
- ROCK RECOVERY PERCENT
- ROCK CORING RATE

STRENGTH TESTS

- POCKET PENETROMETER
- TORVANE
- PEAK/STR VANE
- MINIATURE VANE (p: RESIDUAL VANE)
- UNCONSOLIDATED UNDRAINED TRIAXIAL
- SWEDISH FALL CONE
- UNCONFINED COMPRESSION (SOIL)
- Open symbols indicate remolded tests
- Shear Strength interpreted from CPT Tip Resistance (Nk = 12-18)
- POINT LOAD TEST (ROCK-CONTACT SPECIMEN)
- POINT LOAD TEST (ROCK-ALONG WEAK PLANE)
- UNCONFINED COMPRESSION (ROCK)
- Bolt: Strength Exceeds Capacity of Measuring Device. Rock: Sample broke along discontinuity; Intact sample would have greater strength
- FRACTURE DENSITY (ROCK)

STRENGTH OF COHESIVE SOILS

Consistency	Undrained Shear Strength, kPa
Very Soft	less than 13
Soft	12 to 25
Firm	25 to 50
Stiff	50 to 100
Very Stiff	100 to 200
Hard	greater than 200

DENSITY OF GRANULAR SOILS

Descriptive Term	Relative Density (%)*
Very Loose	less than 15
Loose	15 to 35
Medium Dense	35 to 65
Dense	65 to 85
Very Dense	greater than 85

*Estimated from sampler driving record and CPT tip resistance.

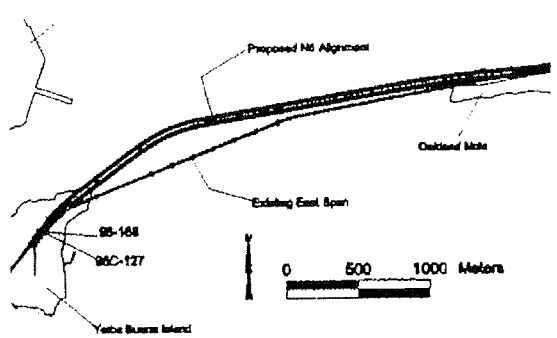

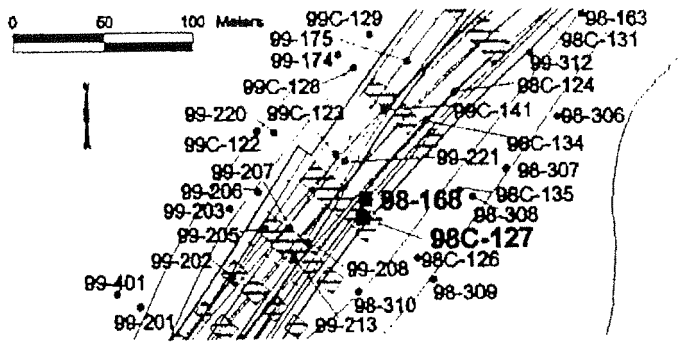

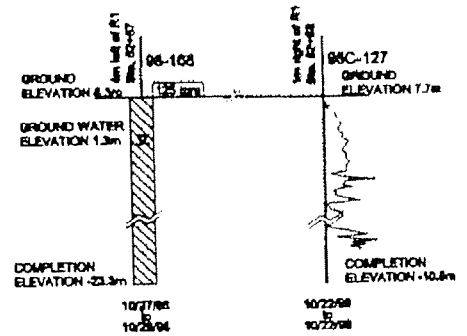

BORING 98-168

COORDINATES: E1836003 N647251
CA State Plane Zone 3, NAD83, Meters
GROUND ELEVATION: 8.3m (MSL)
START DATE: 10/27/98

STATION: 4m left of R1 Sta. 62+67
COMPLETION ELEVATION: -23.3m (MSL)
END DATE: 10/28/98

DEPTH (m)	ELEVATION (m)	SOIL TYPE	SAMPLER	BLOW COUNT	MATERIAL DESCRIPTION	STRATUM NO.
					GROUND ELEVATION: 8.3m (MSL) (0.0m)	
				49 34	ARTIFICIAL FILL (af) PAVEMENT, 125 mm Asphalt Concrete over 63 mm of Aggregate Base (0.3m)	II
				57 73	SEDIMENTARY DEPOSITS (Qs) Silty Fine SAND (SM), dense, dark yellowish brown, moist (3.0m)	III
				86	Fine SAND with silt (SP-SM), dense to very dense, dark yellowish brown, moist Estimated γ (7.0m) -with some low plasticity clay (6.1m)	IV
				80/15cm	Silty Fine SAND (SM), dense to very dense, dark yellowish brown -faint bedding, thinly bedded to laminated (13.7m)	
				90/16cm 60		
				82	Silty Fine SAND (SM), very dense, brown (16.2m)	V
				80	Lean CLAY with sand (CL), hard, gray -with abundant yellowish brown mottles and streaks, moist (16.5m)	VI
				50/30cm	-slight increase in fine sand content, below 18.0m (19.8m)	VII
				49	Sandy Lean CLAY (CL), hard, gray (19.9m)	VIII
				50/5cm	Clayey SAND (SC) to Silty CLAY with SAND (CL-ML)@21.3m very dense, yellowish brown, with sandstone fragments	IX
				85	Sandy SILT (ML), hard, yellowish brown (23.2m)	
				Ref/5cm	Fine SAND with silt (SP-SM), very dense, yellowish brown, moist (24.4m)	X
				100-17	FRANCISCAN FORMATION (JKf)	XI
				100-19	SANDSTONE (Graywacke) (Rx), dark yellowish brown, moderately weathered (25.9m)	XII
				100-64	SANDSTONE (Graywacke) (Rx) and SILTSTONE (Rx) (7:1), bedding dipping 45 degrees, weathering limited to fractures (27.4m)	XIII
				100-60	SANDSTONE (Graywacke) (Rx), gray, fresh, hard (29.0m)	XIV
				100-36	SANDSTONE (Graywacke) (Rx) and SILTSTONE (Rx) (3:1), bedding dipping 40 degrees, fresh, weathering limited to fractures, well indurated	

TOTAL DEPTH 31.0m BACKFILLED WITH: Cement Grout

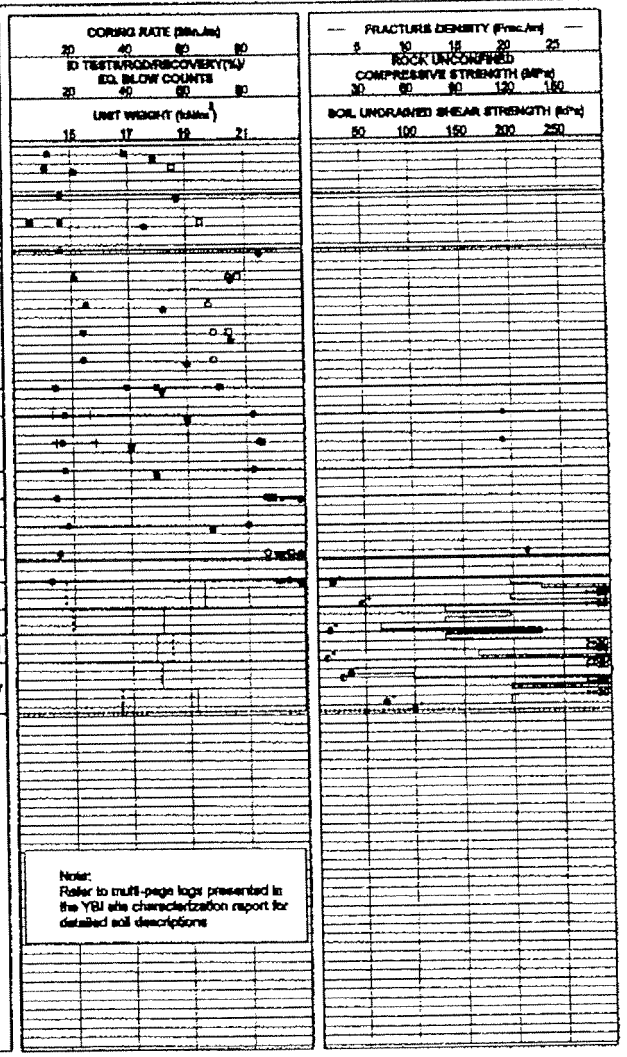

Note:
Refer to multi-page logs presented in the YBI site characterization report for detailed soil descriptions

CPT 98C-127

COORDINATES: E1836002 N647242
CA State Plane Zone 3, NAD83, Meters
GROUND ELEVATION: 7.7m (MSL)
START DATE: 10/22/98

STATION: 1m right of R1 Sta. 62+63
COMPLETION ELEVATION: -10.8m (MSL)
CONE END AREA: 15.00 sq. cm
(Area Ratio = 0.68)

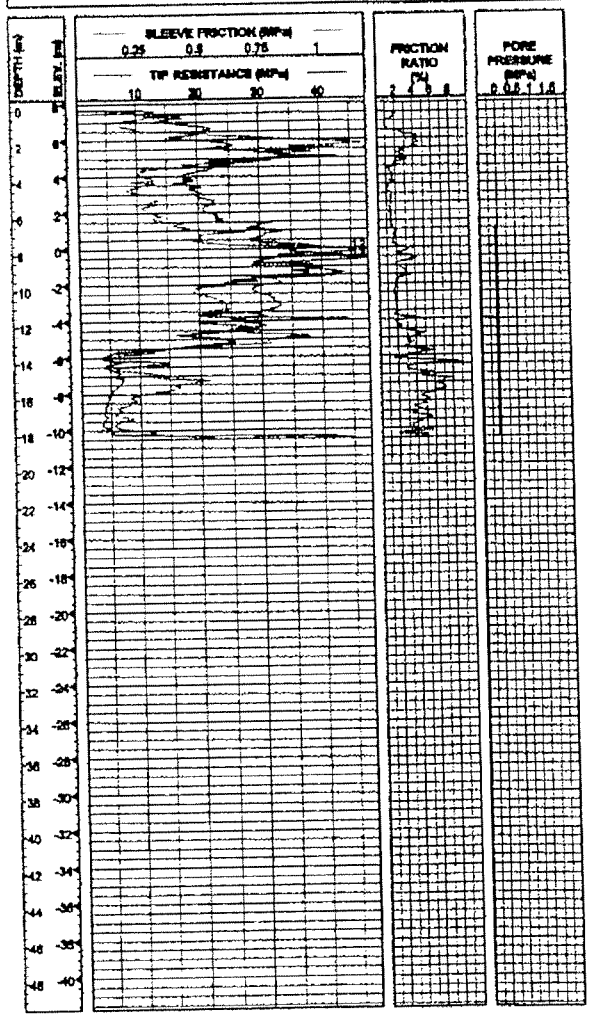

CONTRACT NO. 04-0120R4

CONTRACT CHANGE ORDER NO 75

SHEET 134 OF 136

SAN FRANCISCO OAKLAND BAY BRIDGE
EAST SPAN SEISMIC SAFETY PROJECT

YBI TRANSITION STRUCTURES

ADVANCE CONST PACKAGE NO. 2RO

LOG OF TEST BORINGS NO. 1

R. PRICE / S. MOHAN — DESIGN OVERSIGHT	DRAWN BY: R. PALMER	B. SCHELL — FIELD INVESTIGATION BY:	PREPARED FOR THE STATE OF CALIFORNIA DEPARTMENT OF TRANSPORTATION
SIGN OFF DATE	CHECKED BY: R. VARATHARAJ	DATE: AS NOTED	M. KAPUSKAR — PROJECT ENGINEER

BRIDGE NO.	KILOMETER POST
34-0006L/R	12.8

CU 04251
EA 0120S1

ORIGINAL SCALE IN MILLIMETERS FOR REDUCED PLANS 0 10 20 30 40 50 60 70 80 90 100

DISREGARD PRINTS BEARING EARLIER REVISION DATES

REVISION DATES (PRELIMINARY STAGE ONLY)

SHEET 15 OF 17

DIST	COUNTY	ROUTE	KILOMETER POST TOTAL PROJECT	SHEET NO.	TOTAL SHEETS
04	SF	80	12.6/13.2	32	33

Caltrans Metric

GEOTECHNICAL PROFESSIONAL 05/17/07

REGISTERED PROFESSIONAL ENGINEER MIKE RAMSKAR NO. GE 2564 EXP. 12-31-08 GEOTECHNICAL STATE OF CALIFORNIA

PLANS APPROVAL DATE

The State of California or its officers or agents shall not be responsible for the accuracy or completeness of electronic copies of this plan sheet.

FUGRO-EARTH MECHANICS, J.V.
7750 Pardee Lane, Suite 120
Oakland, CA 94621

SOIL AND ROCK TYPES

Well graded GRAVEL (GW)
Poorly graded GRAVEL (GP)
GRAVEL with sand (GP or GW)
GRAVEL with clay (GP or GW)
Clayey GRAVEL (GC)
GRAVEL with silt (GP or GW)
Silty GRAVEL (GM)
Well graded SAND (SW)
Poorly graded SAND (SP)
SAND with gravel (SP or SW)
SAND with clay (SP-SC)
Clayey SAND (SC)
Silty SAND (SM)
SAND with silt (SP-SM)
Fat CLAY (CH)
Sandy fat CLAY (CH)
Lean CLAY (CL)
Sandy lean CLAY (CL)
Silty CLAY (CL-ML)
Diatomite DI,T
SILT (ML)
Sandy SILT (ML)
Clayey silt (ML/CL)
Highly plastic ORGANICS (OH)
Low plasticity ORGANICS (OL)
SANDSTONE (Rs)
SILTSTONE (Rm)
CLAYSTONE (Rc)
Interbedded Rock Strata (Rx)
PAVEMENT

SAMPLERS

- Three-OD, 72mm-ID Thin Walled Tube
- Three-OD, 63mm-ID Modified California Liner
- 87mm-OD, 64mm-ID* Thin Walled Driven Tube
- 61mm-OD, 35mm-ID SPT Split Spoon Sampler
- 63.5mm-OD, 54mm-ID Osterberg Liner
- Rock Core (insert symbol representa recovery (%)

* A modified-OD, 64-mm-ID bronze driven tube was used to sample coarse sand, gravel and rock.

STANDARD PENETRATION TEST (SPT) AND MODIFIED CALIFORNIA (MC) LINER SAMPLERS

Samplers were driven with a 63.5 kg hammer dropped approximately 760 mm.

blc	Number of blows to produce 30 cm of penetration after the initial 15 cm of seating.
8/23cm	Number of blows required to produce the indicated penetration after an initial 15 cm seating.
Ref/8cm	50 blows produced the indicated penetration during the initial 15 cm interval.

Note: In rock using interval recovery(%)-RQD are shown in the Blow Count column.

TUBE AND OFFSHORE LINER SAMPLERS

WOH	Offshore Liner sample advanced with the weight of an 80 kg hammer.
PUSH or SAVE	Pushed thin-walled 76mm-OD-Lbs.
18/60cm	Number of blows required to produce the indicated penetration using a 64mm-ID-tube sampler. The sampler was driven with an 80 kg downhole hammer dropped approximately 1.8 m.

CLASSIFICATION TESTS BLOW COUNTS AND ROCK QUALITY

- PERCENT PASSING #200 SIEVE
- WATER CONTENT (%)
- UNIT WEIGHT (kN/m³)
- THEORETICAL UNIT WEIGHT (kN/m³)
- PLASTIC LIMIT LIQUID LIMIT
- EQUIVALENT SPT BLOW COUNT = (MC BLOWCOUNT/1.8) OR SPT BLOWCOUNT
- ROCK QUALITY DESIGNATION (RQD)
- ROCK RECOVERY PERCENT
- ROCK CORING RATE

STRENGTH TESTS

- POCKET PENETROMETER
- TORVANE
- REMOTE VANE
- MINIATURE VANE (R RESIDUAL VANE)
- UNCONSOLIDATED UNDRAINED TRIAXIAL
- SWEDISH FALL CONE
- UNCONFINED COMPRESSION (RCW,)
- (Open symbols indicate remolded tests)
- Shear Strength interpreted from CPT Tip Resistance (Nk = 12-18)
- POINT LOAD TEST (ROCK-INTACT SPECIMEN)
- POINT LOAD TEST (ROCK-ALONG WEAK PLANE)
- UNCONFINED COMPRESSION (RCW)
- Bolt Strength Exceeds Capacity of Measuring Device Rock: Sample broke along discontinuity; Intact sample would have greater strength
- FRACTURE DENSITY (RQDK)

STRENGTH OF COHESIVE SOILS

Undrained Shear Strength

Consistency	kPa
Very Soft	less than 12
Soft	12 to 25
Firm	25 to 50
Stiff	50 to 100
Very Stiff	100 to 200
Hard	greater than 200

DENSITY OF GRANULAR SOILS

Descriptive Term	Relative Density (%)*
Very Loose	less than 15
Loose	15 to 35
Medium Dense	35 to 65
Dense	65 to 85
Very Dense	greater than 85

*Estimated from sampler driving record and CPT tip resistance.

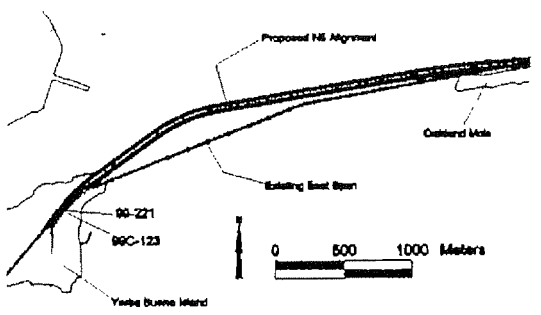

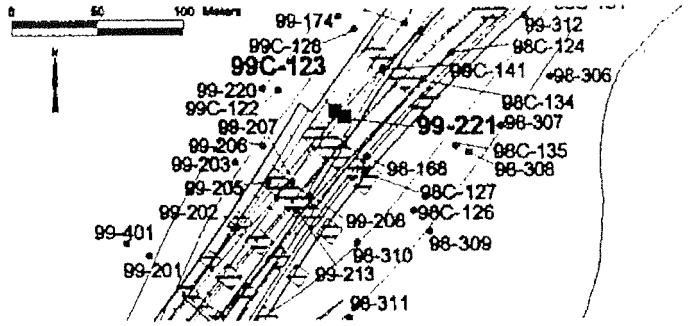

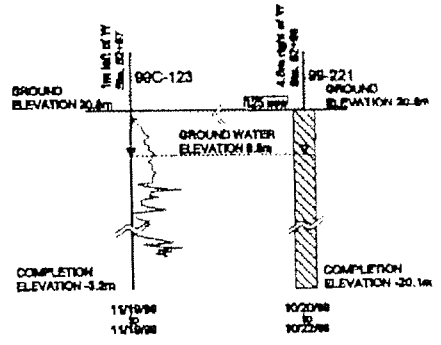

CPT 99C-123

COORDINATES: E1836985 N647277
CA State Plane Zone 3, NAD83, Meters
GROUND ELEVATION: 20.8m (MSL)
START DATE: 11/19/99

STATION: 1m left of W Sta. 82+57
COMPLETION ELEVATION: -3.2m (MSL)
CONE END AREA: 15.00 sq. cm
(Area Ratio = 0.56)

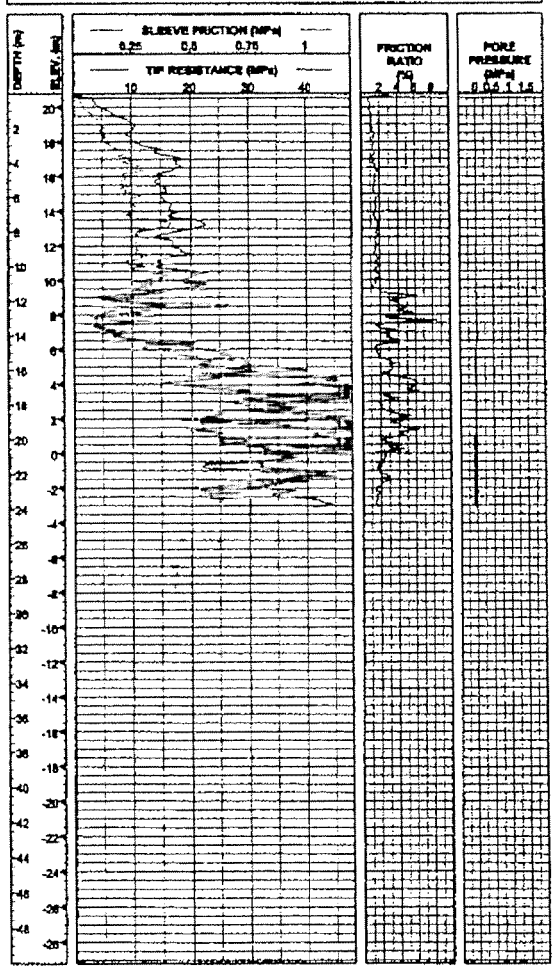

BORING 99-221

COORDINATES: E1835990 N647273
CA State Plane Zone 3, NAD83, Meters
GROUND ELEVATION: 20.8m (MSL)
START DATE: 10/20/99

STATION: 4.5m right of W Sta. 83+86
COMPLETION ELEVATION: -20.1m (MSL)
END DATE: 10/22/99

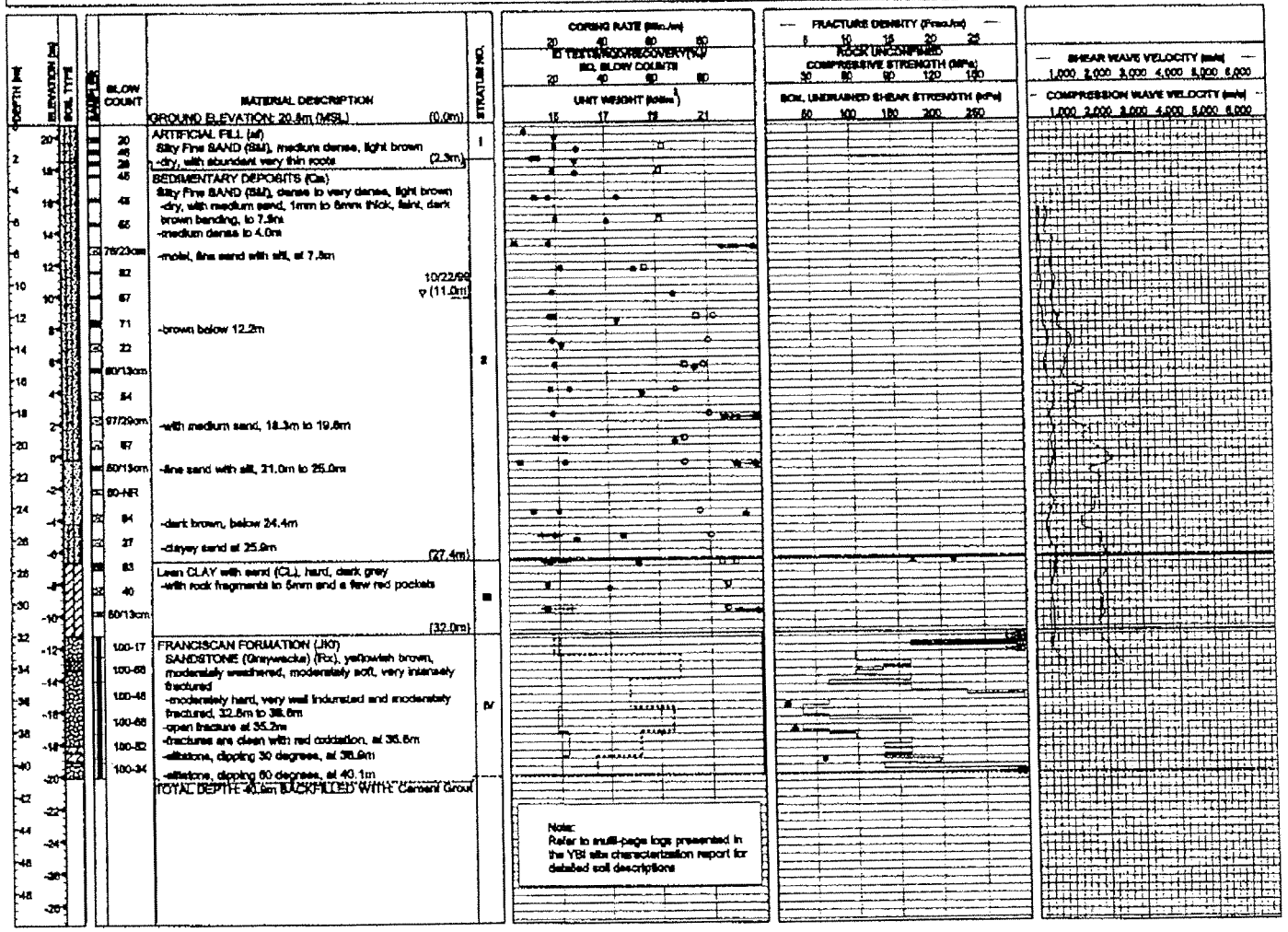

CONTRACT NO. 04-0120R4

CONTRACT CHANGE ORDER NO 75

SHEET 135 OF 136

SAN FRANCISCO OAKLAND BAY BRIDGE
EAST SPAN SEISMIC SAFETY PROJECT

YBI TRANSITION STRUCTURES

ADVANCE CONST PACKAGE NO. 2RO

LOG OF TEST BORINGS NO. 2

R. PRICE / S. MOHAN	DRAWN BY	A. BROUGHTON	PREPARED FOR THE STATE OF CALIFORNIA DEPARTMENT OF TRANSPORTATION
DESIGN OVERSIGHT	CHECKED BY	M.KAPUSKAR, R.VARATHARAJ	M. KAPUSKAR, PROJECT ENGINEER
SIGN OFF DATE	PRENTICE, SICILIANO FIELD INVESTIGATION BY:	DATE: AS NOTED	

ORIGINAL SCALE IN MILLIMETERS FOR REDUCED PLANS 0 10 20 30 40 50 60 70 80 90 100

CU 04251
EA 0120S1

BRIDGE NO. 34-0006L/R
KILOMETER POST 12.8

DISREGARD PRINTS BEARING EARLIER REVISION DATES →

REVISION DATES (PRELIMINARY STAGE ONLY)

SHEET 16 OF 17

DIST	COUNTY	ROUTE	KILOMETER POST TOTAL PROJECT	SHEET NO	TOTAL SHEETS
04	SF	80	12.6/13.2	33	33

Caltrans Metric

05/17/07
GEOTECHNICAL PROFESSIONAL

REGISTERED PROFESSIONAL ENGINEER — MIKE KAPUSKAR — NO. GE 2564 — EXP. 12-31-08 — GEOTECHNICAL — STATE OF CALIFORNIA

PLANS APPROVAL DATE

The State of California or its officers or agents shall not be responsible for the accuracy or completeness of electronic copies of this plan sheet.

FUGRO-EARTH MECHANICS, J.V.
7750 Pardee Lane, Suite 120
Oakland, CA 94621

SOIL AND ROCK TYPES

Well graded GRAVEL (GW); Poorly graded GRAVEL (GP); GRAVEL with sand (GP or GW); GRAVEL with clay (GP or GW); Clayey GRAVEL (GC); GRAVEL with silt (GP or GM); Silty GRAVEL (GM); Well graded SAND (SW); Poorly graded SAND (SP); SAND with gravel (SP or SW); SAND with clay (SP-SC); Clayey SAND (SC); Silty SAND (SM); SAND with silt (SP-SM); Fat CLAY (CH); Sandy fat CLAY (CH); Lean CLAY (CL); Sandy lean CLAY (CL); Silty CLAY (CL-ML); Elastic SILT (MH); SILT (ML); Sandy SILT (ML); Clayey silt (ML/CL); Highly plastic ORGANICS (OH); Low plasticity ORGANICS (OL); SANDSTONE (Rs); SILTSTONE (Rs); CLAYSTONE (Rc); Interbedded Rock Strata (Rc); PAVEMENT

SAMPLERS

- 76mm-OD, 72mm-ID Thin Walled Tube
- 76mm-OD, 60mm-ID Modified California Liner
- 63.5mm-OD, 54mm-ID Offshore Liner
- 51mm-OD, 35mm-ID SPT Split Spoon Sampler
- Rock Core (Insert symbol representing recovery (%))

* A variable-OD, 64-mm-ID lacered driven tube was used to sample coarse sand, gravel and rock

STANDARD PENETRATION TEST (SPT) AND MODIFIED CALIFORNIA (MC) LINER SAMPLERS

Samplers were driven with a 63.5 kg hammer dropped approximately 760 mm.

30	Number of blows to produce 30 cm of penetration after the initial 15 cm of seating.
9/28cm	Number of blows required to produce the indicated penetration after an initial 15 cm seating.
Ref/8cm	50 blows produced the indicated penetration during the initial 15 cm interval.

Note: In rock coring, interval recovery(%)-RQD are shown in the Blow Count column.

TUBE AND OFFSHORE LINER SAMPLERS

WOH	Offshore Liner sample advanced with the weight of an 80 kg hammer.
PUSH or SLWE	Pushed tube-walled 76mm-OD tube.
18/60cm	Number of blows required to produce the indicated penetration using a 64mm-ID tube sampler. The sampler was driven with an 80 kg downhole hammer dropped approximately 1.8 m.

CLASSIFICATION TESTS BLOW COUNTS AND ROCK QUALITY

- PERCENT PASSING #200 SIEVE
- WATER CONTENT (%)
- UNIT WEIGHT (kN/m³)
- THEORETICAL UNIT WEIGHT (kN/m³)

PLASTIC LIMIT LIQUID LIMIT

- EQUIVALENT SPT BLOW COUNT = (MC BLOWCOUNT/1.8) OR SPT BLOWCOUNT
- ROCK QUALITY DESIGNATION (RQD)
- ROCK RECOVERY PERCENT
- ROCK CORING RATE

STRENGTH TESTS

- POCKET PENETROMETER
- TORVANE
- REMOTE VANE
- MINIATURE VANE (p RESIDUAL VANE)
- UNCONSOLIDATED UNDRAINED TRIAXIAL
- SWEDISH FALL CONE
- UNCONFINED COMPRESSION (SOIL)
- Open symbols indicate remolded tests

Shear Strengths interpreted from: CPT Tip Resistance (Mk = 12-15)

- POINT LOAD TEST (ROCK-INTACT SPECIMEN)
- POINT LOAD TEST (ROCK-ALONG WEAK PLANE)
- UNCONFINED COMPRESSION (ROCK)
- Refl: Strength Exceeds Capacity of Measuring Device

Rock: Sample broke along discontinuity; Intact sample would have greater strength

FRACTURE DENSITY (ROCK)

STRENGTH OF COHESIVE SOILS

Consistency	Undrained Shear Strength kPa
Very Soft	less than 12
Soft	12 to 25
Firm	25 to 50
Stiff	50 to 100
Very Stiff	100 to 200
Hard	greater than 200

DENSITY OF GRANULAR SOILS

Descriptive Term	Relative Density (%)*
Very Loose	less than 15
Loose	15 to 35
Medium Dense	35 to 65
Dense	65 to 85
Very Dense	greater than 85

*Estimated from sampler driving record and CPT tip resistance.

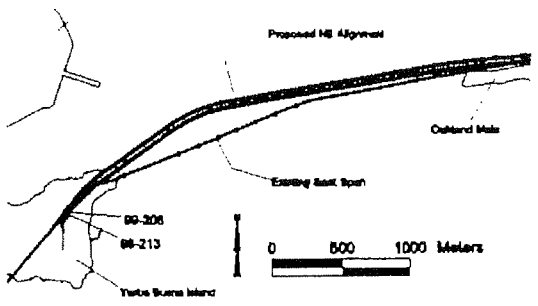

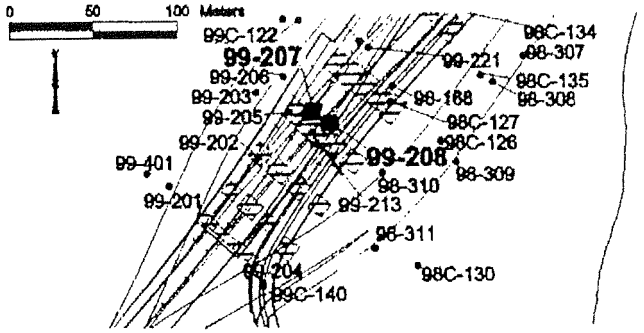

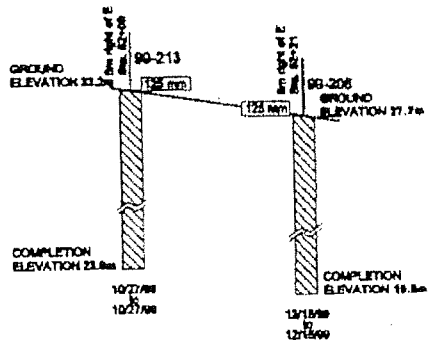

BORING 99-207

COORDINATES: E1835069 N647237
CA State Plane Zone 3, NAD83, Meters
GROUND ELEVATION: 37.4m (MSL)
START DATE: 10/25/98

STATION: 1m right of W Sta. 82+21
COMPLETION ELEVATION: 30.3m (MSL)
END DATE: 10/27/98

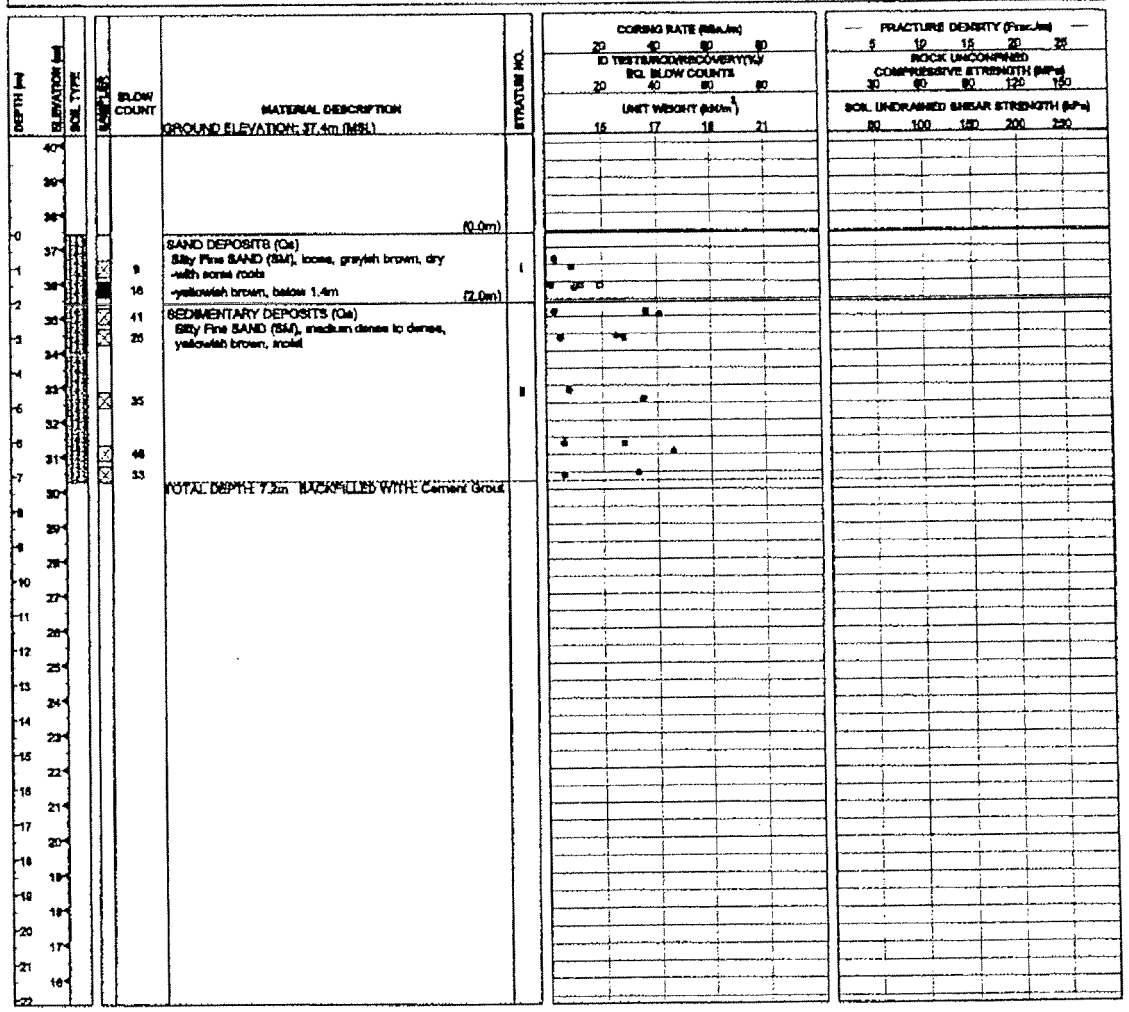

BORING 99-208

COORDINATES: E1835089 N647229
CA State Plane Zone 3, NAD83, Meters
GROUND ELEVATION: 27.7m (MSL)
START DATE: 12/15/98

STATION: 6m right of E Sta. 82+21
COMPLETION ELEVATION: 19.6m (MSL)
END DATE: 12/15/98

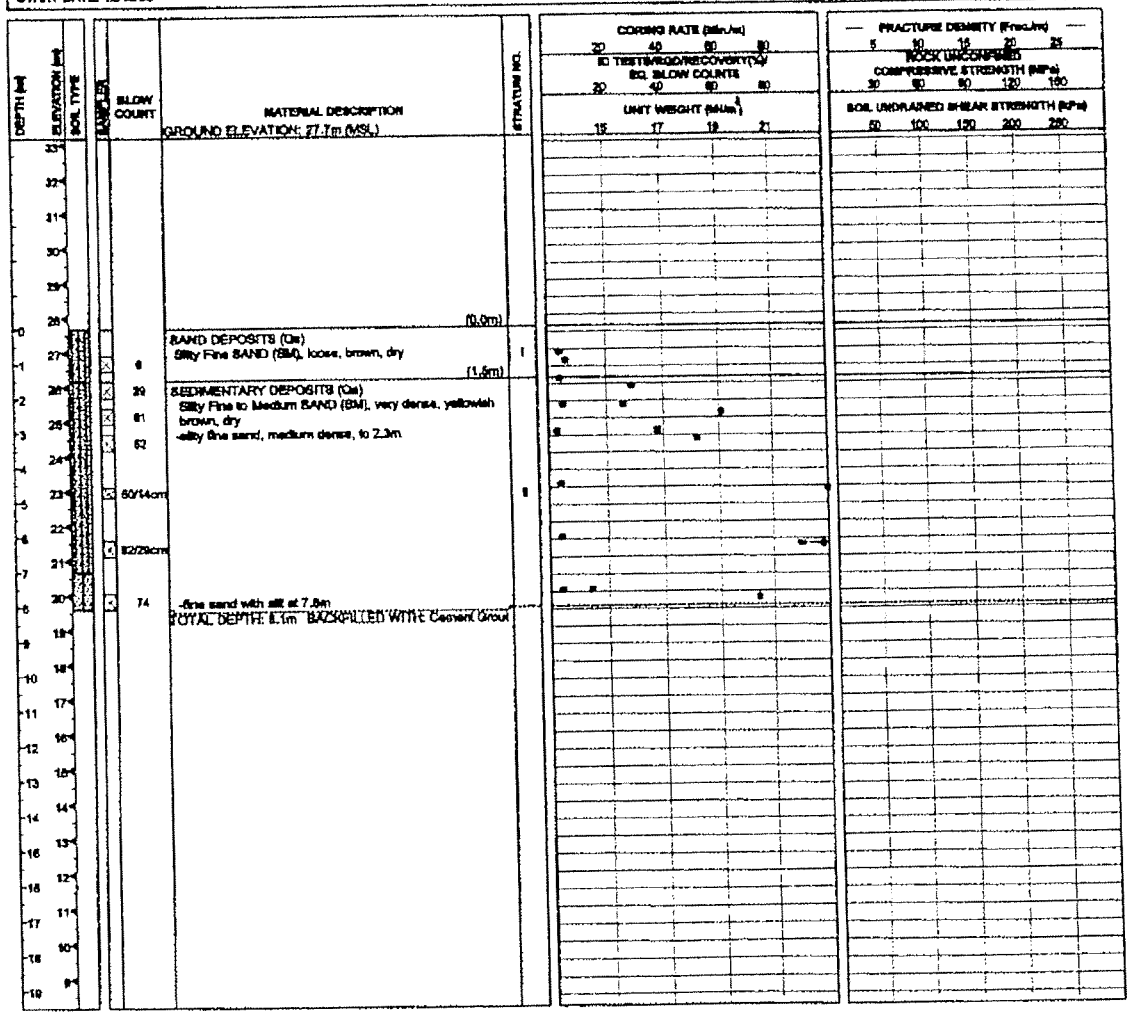

CONTRACT NO. 04-0120R4

CONTRACT CHANGE ORDER NO 75

SHEET 136 OF 136

R. PRICE / S. MOHAN — DESIGN OVERSIGHT	DRAWN BY	A. BROUGHTON	E. LIN — FIELD INVESTIGATION BY:	PREPARED FOR THE STATE OF CALIFORNIA DEPARTMENT OF TRANSPORTATION	M. KAPUSKAR — PROJECT ENGINEER
SIGN OFF DATE	CHECKED BY	M.KAPUSKAR, R.VARATHARAJ	DATE: AS NOTED		

ORIGINAL SCALE IN MILLIMETERS FOR REDUCED PLANS 0 10 20 30 40 50 60 70 80 90 100

CU 04251
EA 0120S1

BRIDGE NO. 34-0006L/R
KILOMETER POST 12.8

DISREGARD PRINTS BEARING EARLIER REVISION DATES

REVISION DATES (PRELIMINARY STAGE ONLY)

SHEET 17 OF 17

SAN FRANCISCO OAKLAND BAY BRIDGE
EAST SPAN SEISMIC SAFETY PROJECT

YBI TRANSITION STRUCTURES

ADVANCE CONST PACKAGE NO. 2RO

LOG OF TEST BORINGS NO. 3

STATE OF CALIFORNIA - DEPARTMENT OF TRANSPORTATION

RECEIVED

CONTRACT CHANGE ORDER MEMORANDUM

DATE: 3/19/2008

007644 JUN 20 08

TO: MIKE FORNER / DENNIS TURCHON	FILE: E.A. 04 - 0120R4
	CO-RTE-PM SF-80-12.6/13.2
FROM: BILL CASEY	FED. NO. ACBRIM-080-1(097)N
CCO#: 75 SUPPLEMENT#: 0 Category Code: BZZZ	CONTINGENCY BALANCE (incl. this change) $46,542,937.12
COST: $13,125,000.00 INCREASE ☑ DECREASE ☐	HEADQUARTERS APPROVAL REQUIRED? ☑ YES ☐ NO
SUPPLEMENTAL FUNDS PROVIDED: $0.00	IS THIS REQUEST IN ACCORDANCE WITH ENVIRONMENTAL DOCUMENTS? ☑ YES ☐ NO
CCO DESCRIPTION: YBITS Advance Construction Bent 7	PROJECT DESCRIPTION: CONSTRUCT ROUTE 80 TEMP BYPASS STRUCTURE

Original Contract Time:	Time Adj. This Change:	Previously Approved CCO Time Adjustments:	Percentage Time Adjusted: (including this change)	Total # of Unreconciled Deferred Time CCO(s): (including this change)
475 Day(s)	DEF Day(s)	1195 Day(s)	252 %	8

THIS CHANGE ORDER PROVIDES FOR:

the construction of the foundations and footings and substructure of Bents W7L and W7R of the Yerba Buena Island Transition Structure (Br. No. 34-0006L/R).

This project, the Temporary Bypass Structure (TBS), was awarded in March 2004 to construct a detour that will allow for the tie in of the new east span of the San Francisco Oakland Bay Bridge to Yerba Buena Island. The TBS encompasses three main structures, the East Tie-In to the existing bridge, the West Tie-In (WTI) to Yerba Buena Island, and the Viaduct structure between the two tie ins.

The Department issued a December 25, 2006 strategy memo which was approved by Tony Anziano (Toll Bridge Program Manager), Richard Land (Chief Engineer), and subsequently by the Toll Bridge Oversight Committee (TBPOC) that called for the advance construction of foundation work for the Yerba Buena Island Transition Structure (YBITS) under this contract. This change order provides for the construction of Bent W7L and Bent W7R of YBITS under this contract.

The work encompassed under this change includes the excavation of approximately 9,500 cubic meters of soil, the placement of 271 steel piles, 985 cubic meters of concrete foundations, and 3 EA approximately 35 meter high bridge columns, along with the installation of a temporary soil nail retaining wall. The installation of a drainage system, construction of a concrete retaining wall, and the removal of an existing wall are also included.

The agreed lump sum price provided under this change order is based on all excavated soil, excluding drill spoils, being stored either on-site or at the Contractor's stockpile site at the corner of Avenue H and 9th Street on Treasure Island and having that soil incorporated back into the work as backfill. In the event the soil needs to be disposed of off-site due to it being classified as contaminated or hazardous, all transportation and disposal costs for off-site disposal shall be paid as extra work at force account under Change Order No. 126 that has been established for the disposal of any advance YBITS contaminated soil encountered. In the event any non-contaminated soil cannot be incorporated back into the work and requires off-site disposal, all transportation and disposal costs for off-site disposal shall be paid separately from this change order.

Compensation for the work of this change shall be paid as extra work at an agreed lump sum price of $13,125,000.00 which shall be financed from the contract's contingency funds. A cost analysis is on file in the project records.

The cost of placing approximately 6,100 cubic meters of cement modified structural backfill and 1,200 cubic meters of imported topsoil is deferred along with the cost of furnishing and placing polyurethane fill specified for the isolation casings. These deferred costs shall be paid under a supplement to this change order once the full scope of work is determined. The type of backfill used, either concrete slurry or cement modified soil, shall be determined pending scheduling and work area constraints at the time the backfill is required. The cost of this deferred work, if concrete slurry is used, is estimated not to exceed $1,750,000.00. In the event cement modified soil can be incorporated into the work the cost may be considerably less.

Any adjustment of contract time is deferred as the change may affect the controlling operation.

This change was requested by Mike Whiteside, YBI Coordination Engineer, per Memorandum on June 1, 2007 and concurred by Alec Melkonians - Asst. Project Manager, Hong Wong - Project Engineer, Lina Ellis - Structures Maintenance, and Robert Kobal - HQ Assistant Construction Coordinator.

ADA Notice: For individuals with sensory disabilities, this document is available in alternate formats. For information call: (916) 654-6410 or TDD (916) 654-3880 or write Records and Forms Management, 1120 N Street, MS-89, Sacramento, CA 95814

CONCURRED BY:			
Construction Engineer:		Date	
Bridge Engineer:	Mike Whiteside, Toll Bridge Design	Date	6/1/07
Project Engineer:	Hong Wong, PE	Date	3/25/08
Project Manager:	Alec Melkonians	Date	3/25/08
FHWA Rep.:		Date	
Environmental:		Date	
Other (specify):	Robert Kobal, HQ Asst.Const.Coor	Date	3/28/08
Other (specify):	Lina Ellis, Maintenance	Date	3/25/08
District Prior Approval By:		Date	
HQ (Issue Approve) By:	Ken Darby, HQ CCO Engineer	Date	
Resident Engineer's Signature:		Date	3-27-08

ESTIMATE OF COST

	THIS REQUEST	TOTAL TO DATE
ITEMS	$0.00	$0.00
FORCE ACCOUNT	$0.00	$0.00
AGREED PRICE	$13,125,000.00	$13,125,000.00
ADJUSTMENT	$0.00	$0.00
TOTAL	$13,125,000.00	$13,125,000.00

FEDERAL PARTICIPATION

☐ PARTICIPATING ☐ PARTICIPATING IN PART ☐ NONE
☐ NON-PARTICIPATING (MAINTENANCE) ☑ NON-PARTICIPATING

FEDERAL SEGREGATION (if more than one Funding Source or P.I.P. type)
☑ CCO FUNDED PER CONTRACT ☐ CCO FUNDED AS FOLLOWS

FEDERAL FUNDING SOURCE	PERCENT

ADA Notice: For individuals with sensory disabilities, this document is available in alternate formats. For information call: (916) 654-6410 or TDD (916) 654-3880 or write Records and Forms Management, 1120 N Street, MS-89, Sacramento, CA 95814.

DEPARTMENT OF TRANSPORTATION – District 4 Toll Bridge Program
325 Burma Rd.
Oakland, CA 94607
Telephone (510) 622-4200 Fax (510) 622-4266

LETTER OF TRANSMITTAL

To: CC MYERS INC
3286 FITZGERALD ROAD
RANCHO CORDOVA CA 95741

Attn: Bob Coupe

Date: 22-Sep-2009

Contract No: 04-0120R4
04-SF-80-12.6-13.2

Job Name: South – South Detour

Transmittal No.: 05.03.02-001777

Subject : Approved Contract Change Order No. 75 - Supplemental No. 1

Enclosed please find the following items:

[ ]	Shop Drawings	[X]	Change Order	[ ]	Submittal(s)
[ ]	WSWD Report(s)	[ ]	Plans	[ ]	Other
[ ]	Daily Extra Work Reports	[ ]	Progress Payment		
[ ]	RFI Responses	[ ]	Dept. Letter		

Item	Date	Copies	Sheets	Description
1	22-Sep-2009	1	9	Approved Contract Change Order No. 75 - Supplemental No. 1

These Are Transmitted As Checked Below:

[ ]	For Approval or Action	[ ]	Approved as Submitted	[ ]	Resubmit	___	Copies for approval
[X]	For Your Use	[X]	Approved as Noted	[ ]	Submit	___	Copies for distribution
[ ]	As Requested	[ ]	Returned for Corrections	[ ]	Return	___	Corrected prints
[ ]	For Review & Comment	[ ]	Other	[ ]	Sign and Return		

Remarks:

Signed: 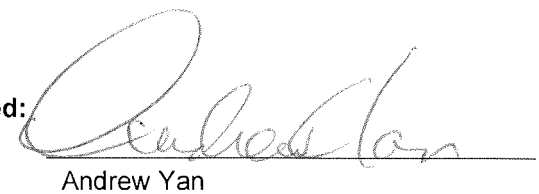

Andrew Yan

Copy To:
File: 05.03.02, 49.75S1.01

CONTRACT CHANGE ORDER

Change Requested by: Engineer

CCO 75	Suppl. No. 1	Contract No. 04 - 0120R4	Road SF-80-12.6/13.2	FED. AID LOC.: ACBRIM-080-1(097)N

To: **CC MYERS INC**

You are directed to make the following changes from the plans and specifications or do the following described work not included in the plans and specifications for this contract. ***NOTE: This change order is not effective until approved by the Engineer.***

Description of work to be done, estimate of quantities and prices to be paid. (Segregate between additional work at contract price, agreed price and force account.) Unless otherwise stated, rates for rental of equipment cover only such time as equipment is actually used and no allowance will be made for idle time. This last percentage shown is the net accumulated increase or decrease from the original quantity in the Engineer's Estimate.

Provide for the following changes to Bents W7L and W7R of the Yerba Buena Island Transition Structure (Br. No. 34-0006L/R) as shown on Sheets No. 3 through 9 of this contract change order:

1) Eliminate the placement of polyurethane material for the corrugated steel pipe isolation sleeves.

2) Eliminate the placement of cement modified structural backfill and imported topsoil and provide for the placement of the reinforced backfill of the footings employing geogrid reinforcement.

Extra Work at Lump Sum:

Compensate the Contractor for all costs associated with the backfill of the Bent W7L and W7R footings, including furnishing and installing all geogrid reinforcement and furnishing and installing all reinforced backfill drainage, as shown under this change order.

For this work, the Contractor shall be compensated a lump sum of $910,810.00. This sum constitutes full and final compensation, including all markups, for all costs associated with this work.

Total Cost of Extra Work at Lump Sum $910,810.00

No adjustment of compensation shall be made for the elimination of the placement of polyurethane material for the corrugated steel pipe isolation sleeves or for the elimination of the placement of imported topsoil as compensation for these costs were deferred under the original Contract Change Order No. 75.

Consideration of a time adjustment will be deferred until completion of the work specified herein. Determination of a commensurate time extension will be made in accordance with Section 8-1.07, "Liquidated Damages", of the Standard Specifications and Section 10-1.20 "Time Related Overhead (TRO)" of the Special Provisions.

Compensation for delays resulting from this work will be made in accordance with Section 8-1.09 "Right of Way Delays" of the Standard Specifications and Section 10-1.20 "Time Related Overhead" of the Special Provisions.

CONTRACT CHANGE ORDER

Change Requested by: Engineer

CCO 75	Suppl. No. 1	Contract No. 04 - 0120R4	Road SF-80-12.6/13.2	FED. AID LOC.: ACBRIM-080-1(097)N

Estimated Cost: Increase ☑ Decrease ☐ **$910,810.00**

By reason of this order the time of completion will be adjusted as follows: Deferred

Submitted by

Signature	Resident Engineer BILL CASEY	Date 7-15-09

Approval Recommended by

Signature Mike Forner	SFOBB Construction Manager MIKE FORNER	Date 7-15-09

Engineer Approval by

Signature Mike Forner	SFOBB Construction Manager MIKE FORNER	Date 7-31-09

We the undersigned contractor, have given careful consideration to the change proposed and agree, if this proposal is approved, that we will provide all equipment, furnish the materials, except as may otherwise be noted above, and perform all services necessary for the work above specified, and will accept as full payment therefor the prices shown above.

NOTE: If you, the contractor, do not sign acceptance of this order, your attention is directed to the requirements of the specifications as to proceeding with the ordered work and filing a written protest within the time therein specified.

Contractor Acceptance by

Signature	(Print name and title) DANIEL E. HIMICK, PRESIDENT	Date 7/24/09

Notes:

1a. Type UX geogrids shall be "Tensar" geogrid UX-1600HS or equal.

1b. Type UX geogrids shall be 1.33m wide rolls, rolled out parallel to the Soil Nail Wall LOL and shall extend from the face of the finished backfill slope to the excavation slope limits. Above Elev 21.60 the length of any type "UX" roll strip need not be longer than 21.3 m.

2a. Type BX geogrids shall be "Tensar" geogrid BX-1100.

2b. Type BX geogrids shall be oriented perpendicular to the face of the finished backfill slope. Below Elev 26.6 Type "BX" geogrids shall extend a minimum of 4 m behind the finished backfill slope; above Elev 26.64 Type "BX" geogrids shall extend a minimum of 6.1 m behind the finished backfill slope.

3. Adjacent geogrid roll strips shall be overlapped a minimum of 0.91 m with a 75 mm vertical separation.

DIST.	COUNTY	ROUTE	KILOMETER POST TOTAL PROJECT	SHEET NO.	TOTAL SHEETS
04	SF	80	12.6/13.2	20A	33

Caltrans Metric

REGISTERED ENGINEER - CIVIL

PLANS APPROVAL DATE

REGISTERED PROFESSIONAL ENGINEER — A.L. ELY — No. 18880 — Exp. 6-30-11 — CIVIL — STATE OF CALIFORNIA

The State of California or its officers or agents shall not be responsible for the accuracy or completeness of electronic copies of this plan sheet.

T.Y.LIN / MOFFATT & NICHOL
TWO HARRISON STREET
SAN FRANCISCO, CA 94105

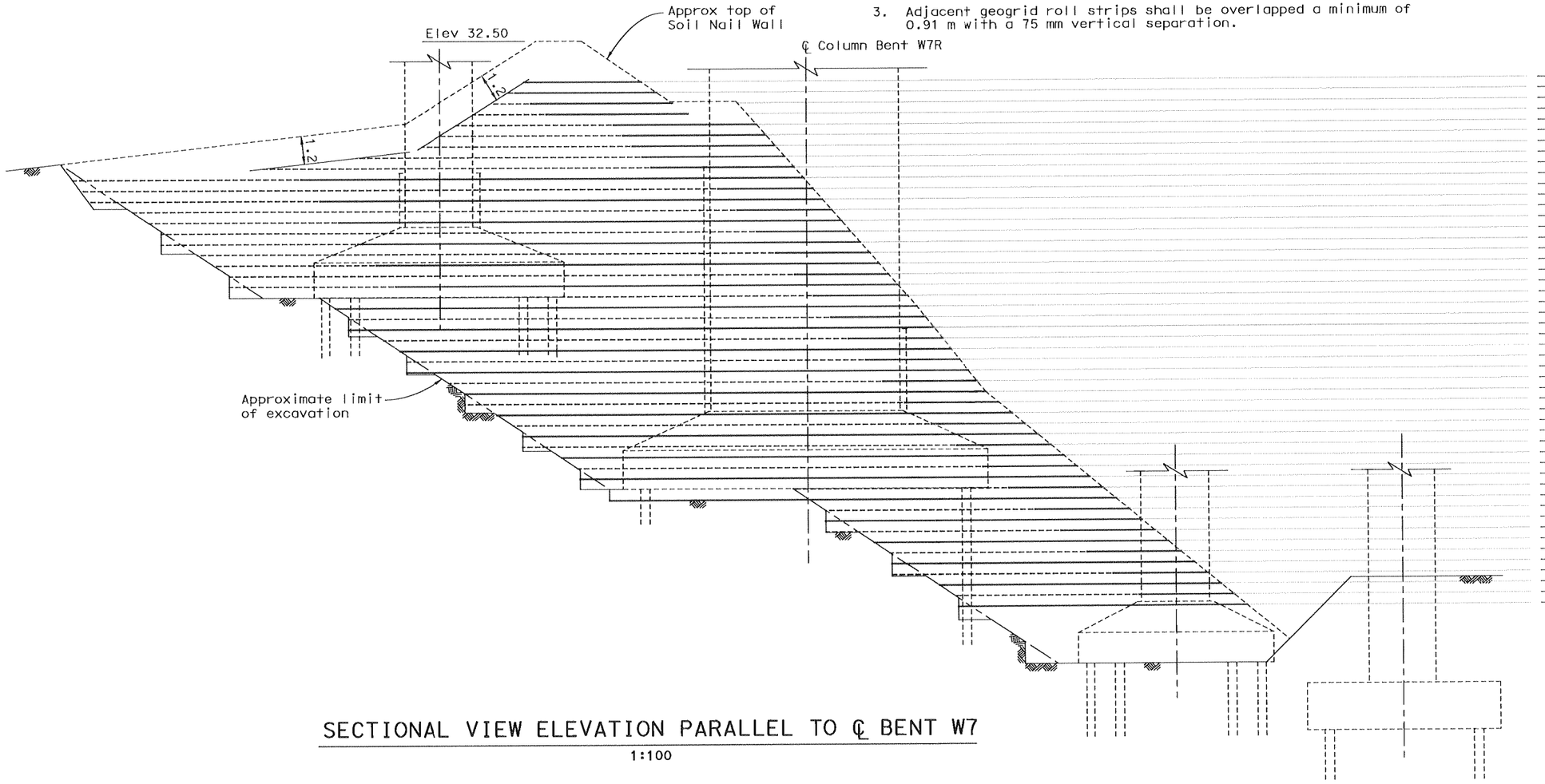

Grid Number	Elevation	Grid Type
50	30.75	BX
49	30.30	BX
48	29.84	BX
47	29.38	BX
46	28.92	BX
45	28.47	BX
44	28.01	BX
43	27.55	BX
42	27.10	BX
41	26.64	UX
40	26.18	BX
39	25.72	UX
38	25.27	BX
37	24.81	UX
36	24.35	BX
35	23.89	UX
34	23.44	BX
33	22.98	UX
32	22.52	BX
31	22.07	UX
30	21.61	BX
29	21.15	UX
28	20.69	BX
27	20.24	UX
26	19.78	BX
25	19.32	UX
24	18.87	BX
23	18.41	UX
22	17.95	BX
21	17.49	UX
20	17.04	BX
19	16.58	UX
18	16.12	BX
17	15.67	UX
16	15.21	BX
15	14.75	UX
14	14.29	BX
13	13.84	UX
12	13.38	BX
11	12.92	UX
10	12.46	BX
9	12.01	UX
8	11.55	BX
7	11.09	UX
6	10.64	BX
5	10.18	UX
4	9.72	BX
3	9.26	UX
2	8.81	BX
1	8.35	UX

SECTIONAL VIEW ELEVATION PARALLEL TO ℄ BENT W7

1:100

Datum Elev 0.0

CONTRACT NO. 04-0120R4
SUPPLEMENTAL SHEET
CONTRACT CHANGE ORDER NO. 75-S1
SHEET 4 OF 9

ALL DIMENSIONS ARE IN METERS UNLESS OTHERWISE SHOWN

SAN FRANCISCO OAKLAND BAY BRIDGE
EAST SPAN SEISMIC SAFETY PROJECT

YBI TRANSITION STRUCTURES

ADVANCE CONST PACKAGE NO. 2RO

REINFORCED BACKFILL DETAILS NO.1

DESIGN OVERSIGHT — JUAN F. CARPIO — SIGN OFF DATE

	BY	CHECKED
DESIGN	Kapuskar	Lee
DETAILS	Samson	Ely
QUANTITIES		

PREPARED FOR THE STATE OF CALIFORNIA DEPARTMENT OF TRANSPORTATION

Jal Birdy — PROJECT ENGINEER

BRIDGE NO. 34-0006 L/R
KILOMETER POST 12.8

CU 04251
EA 0120S1

DISREGARD PRINTS BEARING EARLIER REVISION DATES

REVISION DATES (PRELIMINARY STAGE ONLY): 2/27/09 | 9/11/09

SHEET 4A OF 17

Rev. Date: 5-18-98

ORIGINAL SCALE IN MILLIMETERS FOR REDUCED PLANS 0 10 20 30 40 50 60 70 80 90 100

FILE => p:\4141-06\CADD\TS\Final Const 3\Adv Const Pkg 2RO\Revision 091109\edexc0-4A.dgn

USERNAME => fsamson DATE PLOTTED => 9/11/2009 TIME PLOTTED => 2:41:33 PM

Sept 11, 2009

T.Y.LIN / MOFFATT & NICHOL
TWO HARRISON STREET
SAN FRANCISCO, CA 94105

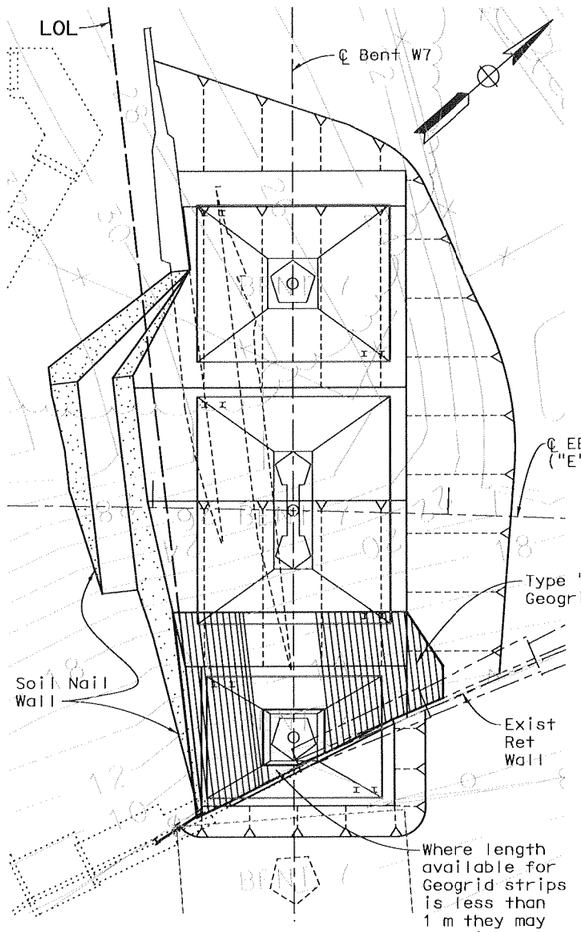

GEOGRID PLAN AT ELEVATION 8.35
1:200

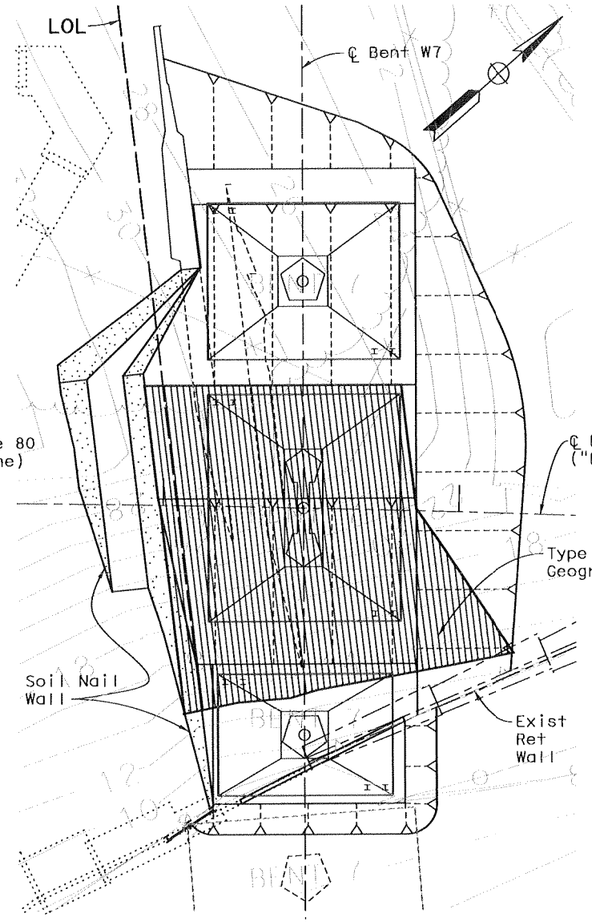

GEOGRID PLAN AT ELEVATION 12.92
1:200

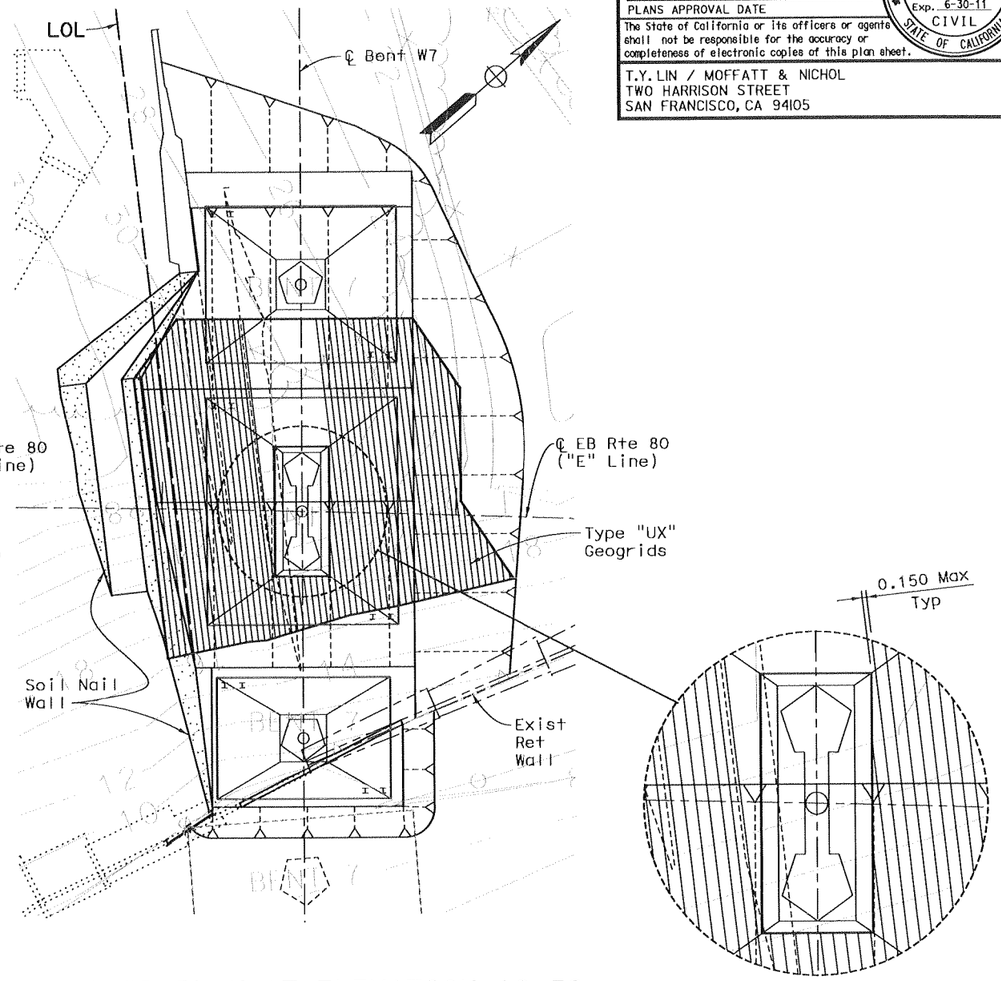

GEOGRID PLAN AT ELEVATION 16.58
1:200

CONTRACT NO. 04-0120R4
SUPPLEMENTAL SHEET

CONTRACT CHANGE ORDER NO. 75-S1
SHEET 5 OF 9

ALL DIMENSIONS ARE IN METERS UNLESS OTHERWISE SHOWN

SAN FRANCISCO OAKLAND BAY BRIDGE
EAST SPAN SEISMIC SAFETY PROJECT

YBI TRANSITION STRUCTURES

ADVANCE CONST PACKAGE NO. 2RO

REINFORCED BACKFILL DETAILS NO.2

DESIGN OVERSIGHT — JUAN F. CARPIO — SIGN OFF DATE

	BY	CHECKED
DESIGN	Kapuskar	Lee
DETAILS	Samson	Ely
QUANTITIES		

PREPARED FOR THE STATE OF CALIFORNIA DEPARTMENT OF TRANSPORTATION

Jal Birdy — PROJECT ENGINEER

BRIDGE NO. 34-0006 L/R
KILOMETER POST 12.8

CU 04251
EA 0120S1

DISREGARD PRINTS BEARING EARLIER REVISION DATES

REVISION DATES (PRELIMINARY STAGE ONLY): 2/27/09 9/11/09

SHEET 4B OF 17

Rev. Date: 5-18-98

ORIGINAL SCALE IN MILLIMETERS FOR REDUCED PLANS 0 10 20 30 40 50 60 70 80 90 100

FILE => p:\4141-06\CADD\TS\Final Const 3\Adv Const Pkg 2RO\Revision 091109\edexc0-4B.dgn

USERNAME => fsamson DATE PLOTTED => 9/11/2009 TIME PLOTTED => 2:41:45 PM

Sept 11, 2009

DIST.	COUNTY	ROUTE	KILOMETER POST TOTAL PROJECT	SHEET NO.	TOTAL SHEETS
04	SF	80	12.6/13.2	20C	33

Caltrans Metric

Al Ely
REGISTERED ENGINEER - CIVIL

PLANS APPROVAL DATE

The State of California or its officers or agents shall not be responsible for the accuracy or completeness of electronic copies of this plan sheet.

REGISTERED PROFESSIONAL ENGINEER A.L. ELY No. 18880 Exp. 6-30-11 CIVIL STATE OF CALIFORNIA

T.Y. LIN / MOFFATT & NICHOL
TWO HARRISON STREET
SAN FRANCISCO, CA 94105

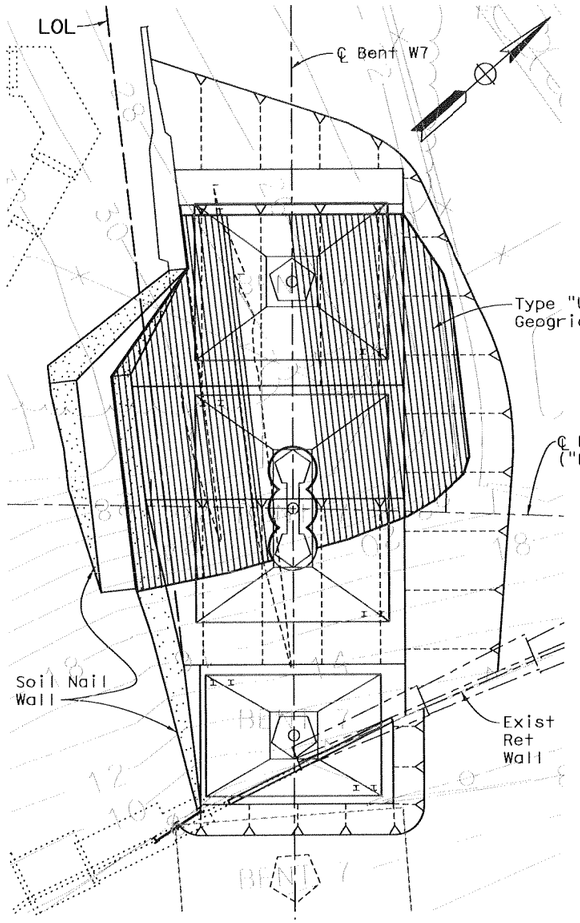

GEOGRID PLAN AT ELEVATION 21.15
1:200

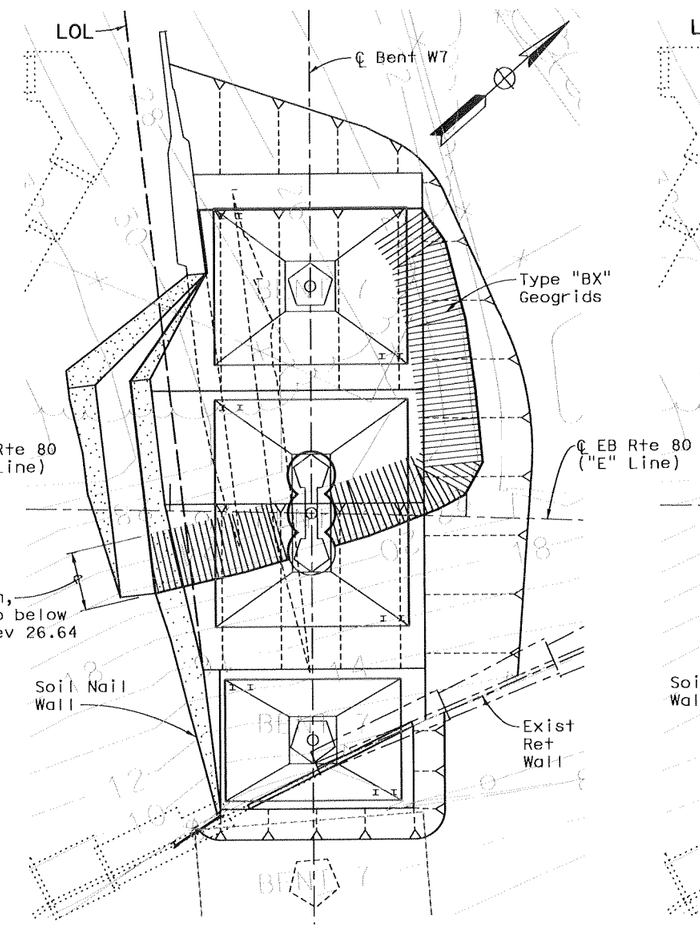

GEOGRID PLAN AT ELEVATION 21.61
1:200

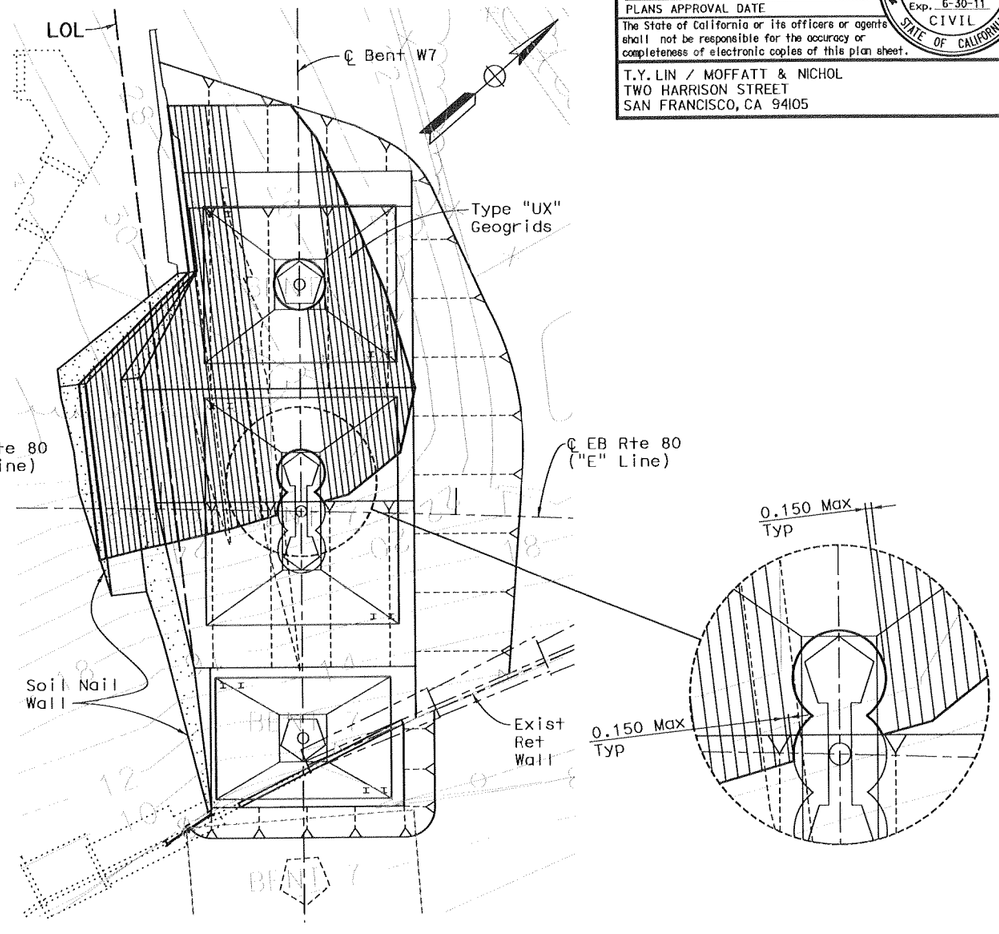

GEOGRID PLAN AT ELEVATION 24.64
1:200

CONTRACT NO. 04-0120R4
SUPPLEMENTAL SHEET

CONTRACT CHANGE ORDER NO. 75-S1
SHEET 6 OF 9

ALL DIMENSIONS ARE IN METERS UNLESS OTHERWISE SHOWN

SAN FRANCISCO OAKLAND BAY BRIDGE
EAST SPAN SEISMIC SAFETY PROJECT

YBI TRANSITION STRUCTURES

ADVANCE CONST PACKAGE NO. 2R0

REINFORCED BACKFILL DETAILS NO.3

DESIGN OVERSIGHT
Francisco Carpio
JUAN F. CARPIO
SIGN OFF DATE

	BY	CHECKED
DESIGN	Kapuskar	Lee
DETAILS	Samson	Ely
QUANTITIES		

PREPARED FOR THE STATE OF CALIFORNIA DEPARTMENT OF TRANSPORTATION

Jal Birdy
PROJECT ENGINEER

BRIDGE NO. 34-0006 L/R
KILOMETER POST 12.8

Rev. Date: 5-18-98

ORIGINAL SCALE IN MILLIMETERS FOR REDUCED PLANS 0 10 20 30 40 50 60 70 80 90 100

CU 04251
EA 0120S1

DISREGARD PRINTS BEARING EARLIER REVISION DATES

REVISION DATES (PRELIMINARY STAGE ONLY) 2/27/09 9/11/09

SHEET 4C OF 17

FILE => p:\4141-06\CADD\TS\Final Const 3\Adv Const Pkg 2R0\Revision 091109\edexc0-4C.dgn

Sept 11, 2009

USERNAME => fsamson DATE PLOTTED => 9/11/2009 TIME PLOTTED => 2:41:57 PM

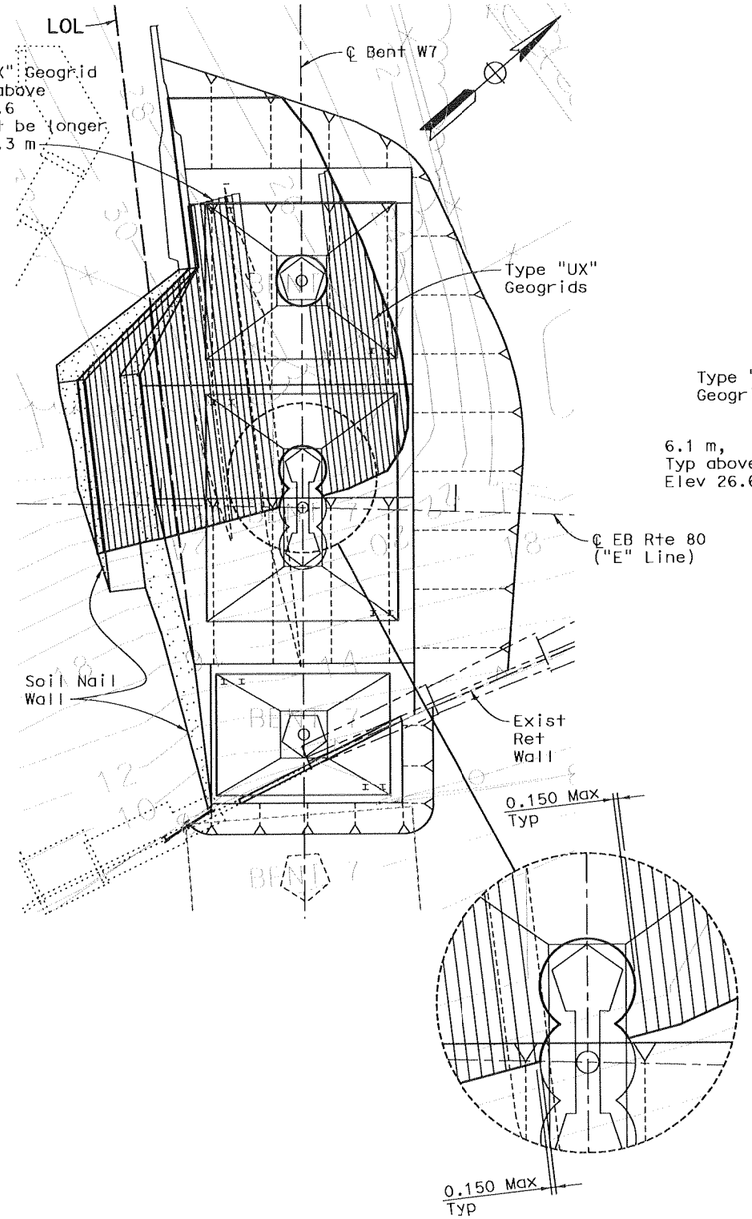

GEOGRID PLAN AT ELEVATION 24.81

1:200

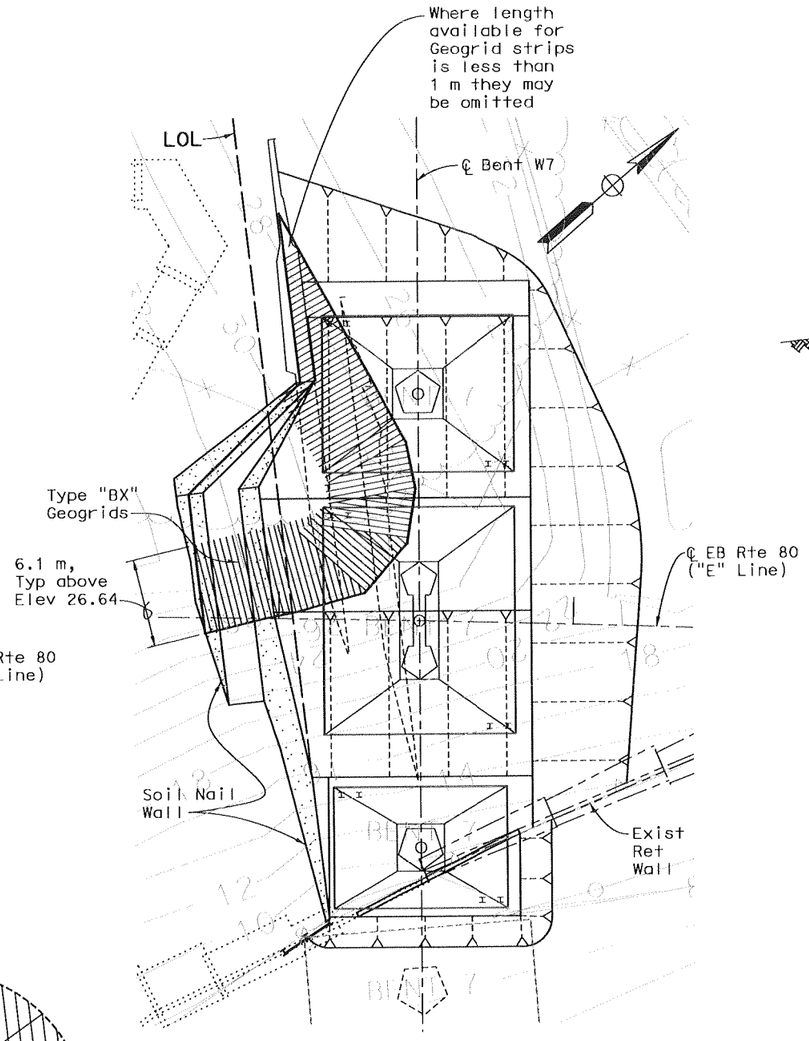

GEOGRID PLAN AT ELEVATION 27.55

1:200

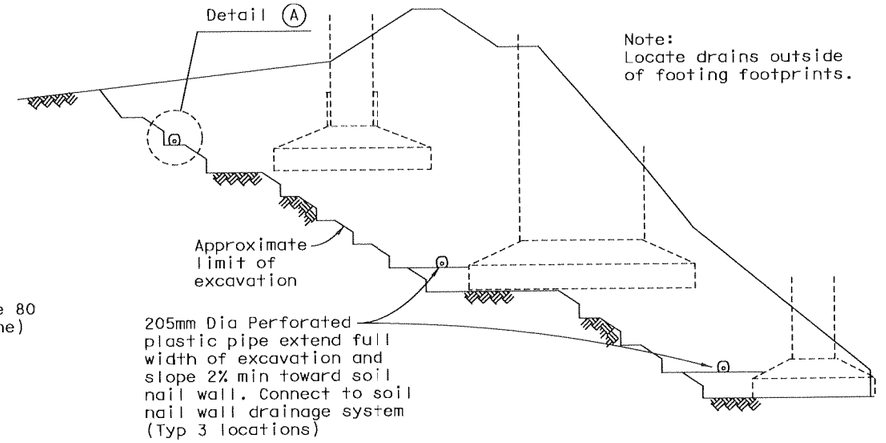

REINFORCED BACKFILL DRAINAGE

No Scale

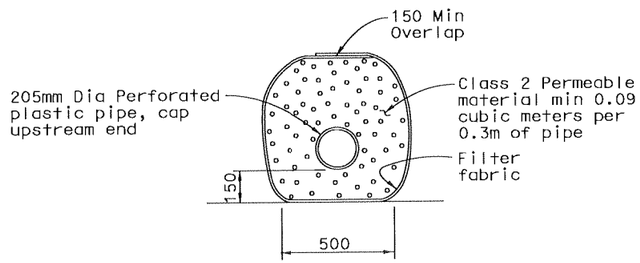

DETAIL A

Bottom of underdrainage at or above stripped grade

No Scale

CONTRACT NO. 04-0120R4

SUPPLEMENTAL SHEET

CONTRACT CHANGE ORDER NO. 75-S1

SHEET 7 OF 9

ALL DIMENSIONS ARE IN METERS UNLESS OTHERWISE SHOWN

DIST.	COUNTY	ROUTE	KILOMETER POST TOTAL PROJECT	SHEET NO.	TOTAL SHEETS
04	SF	80	12.6/13.2	20D	33

Caltrans Metric

A L Ely

REGISTERED ENGINEER - CIVIL

PLANS APPROVAL DATE

REGISTERED PROFESSIONAL ENGINEER — A.L. ELY — No. 18880 — Exp. 6-30-11 — CIVIL — STATE OF CALIFORNIA

The State of California or its officers or agents shall not be responsible for the accuracy or completeness of electronic copies of this plan sheet.

T.Y. LIN / MOFFATT & NICHOL
TWO HARRISON STREET
SAN FRANCISCO, CA 94105

SAN FRANCISCO OAKLAND BAY BRIDGE
EAST SPAN SEISMIC SAFETY PROJECT

YBI TRANSITION STRUCTURES

ADVANCE CONST PACKAGE NO. 2RO

REINFORCED BACKFILL DETAILS NO.4

DESIGN OVERSIGHT: Francisco Carpio — JUAN F. CARPIO — SIGN OFF DATE			
DESIGN	BY Kapuskar	CHECKED Lee	
DETAILS	BY Samson	CHECKED Ely	
QUANTITIES	BY	CHECKED	

PREPARED FOR THE STATE OF CALIFORNIA DEPARTMENT OF TRANSPORTATION

Jal Birdy — PROJECT ENGINEER

BRIDGE NO. 34-0006 L/R

KILOMETER POST 12.8

CU 04251
EA 0120S1

DISREGARD PRINTS BEARING EARLIER REVISION DATES →

REVISION DATES (PRELIMINARY STAGE ONLY): 2/27/09 | 9/11/09

SHEET 4D OF 17

Rev. Date: 5-18-98

ORIGINAL SCALE IN MILLIMETERS FOR REDUCED PLANS 0 10 20 30 40 50 60 70 80 90 100

FILE => p:\4141-06\CADD\TS\Final Const 3\Adv Const Pkg 2RO\Revision 091109\edexc0-4D.dgn

Sept 11, 2009

DATE PLOTTED => 9/11/2009 TIME PLOTTED => 2:42:12 PM

USERNAME => fsamson

CONSTRUCTION REQUIREMENTS FOR GEOGRID SYSTEM

1.0 MATERIALS

1.1 Backfill

1.1.1 Reinforced backfill shall be free of excess moisture, roots, muck, sod, snow, frozen lumps, organic matter or other deleterious materials. All rock particles and hard earth clods shall be less than 4 inches in the longest dimension. Backfill which does not meet these criteria shall be considered unsuitable and shall be removed.

1.1.2 Reinforced backfill shall be on-site or import soils that meet the strength requirements defined in section 3.0 and the gradation limits listed below. The portion of the reinforced backfill passing the no. 40 sleeve shall have a liquid limit less than 20 and plasticity index less than 10. Reinforced backfill shall be classified per the unified soil classification system as low or non-plastic soils with: sand equivalent 20 min., % passing #200 50%, max particle size 32 mm, plasticity index 10 max, pH 4.5 to 9.

1.2 Soil reinforcement
Geogrid reinforcement shall be tensar uniaxial and biaxial geogrids or approved equivalent.

2.0 DESIGN RESPONSIBILITY

2.1 Internal Stability	Factor of Safety Static	Seismic
Geogrid tensile strength, minimum	1.5	1.1
Geogrid pullout capacity, minimum	1.5	1.1
Geogrid connection strength, minimum	1.5	1.1
Sliding at lowest geogrid, minimum	1.5	1.1
2.1.1 External stability		
Sliding at MSE base, minimum	1.5	1.1
Overturning, minimum	2	1.5

2.2 Responsibility of others:
The site characteristics listed below affect the performance of the reinforced backfill system. State is responsible for ensuring that the following site characteristics are properly addressed by a qualified Engineer and Geologist.

2.2.1 Geogrid design depends upon the physical and strength requirements of the backfill. State shall verify backfill specifications and appropriate backfill testing methods and frequency.

2.2.2 Hydrostatic Conditions

2.2.3 The reinforced backfill should remain free of water and all unbalanced hydrostatic forces.
A backdrain and surface water drainage system is required.

3.0 DESIGN PARAMETERS

3.1 The following parameters control the design:

3.2 Backfill soil

Soil zone	Moist unit weight (pcf)	Effective friction (degrees)	Effective cohesion (psf)
Reinforced zone	125	34	150

3.3 Geogrid

Geogrid tensile properties and reduction factors are reported in the Geogrid design report date to be determined.

3.4 Design life = 75 years (BX), 120 years (UX)

3.5 Loadings = 240 psf

4.0 CONSTRUCTION

4.1 A complete set of approved construction drawings and contract specifications shall be on site at all times during construction of the backfill system.

4.2 Foundation preparation:
Prior to construction of the backfill system, the Contractor shall clear and grub the reinforced backfill footprint, removing top soil, brush, sod or other organic or deleterious material. Any unsuitable soils shall be over-excavated, replaced with compacted backfill material to project specifications or as otherwise directed by a qualified Geotechnical Engineer. The foundation shall be proof roll inspected using a loaded truck with 18 kip axle loads or per project specifications. A qualified Geotechnical Engineer and Engineering Geologist shall confirm that the site has been properly prepared and meets the design parameters stated in Section 3.0.

4.4 Geogrid replacement

4.4.1 Geogrids shall be installed at the lengths, elevations, and locations shown on the drawings herein. Changes to Geogrid layout are not permissible without the approval of State.

4.4.2 Geogrid reinforcement shall be continuous throughout their embedment length. Geogrid to Geogrid connection is not allowed.

4.4.3 Tracked construction equipment shall not be operated directly on the Geogrid reinforcement. A minimum backfill thickness of 150 mm is required for operation of tracked vehicles over the Geogrid reinforcement. Turning of tracked vehicles should be kept to a minimum to prevent tracks from displacing the fill and/or Geogrid reinforcement. Rubber-tired vehicles may pass over the Geogrid reinforcement at speeds less than 10 mph. Sudden braking and sharp turning shall be avoided.

4.4.5 A minimum of 75 mm of reinforced backfill shall be placed between overlapping layers of Geogrid reinforcement.

4.5 Backfill placement

4.5.1 Backfill shall be placed in alternating lifts. The Geogrid shall be tensioned by hand to eliminate slack and anchored by pinning or placing soil on the Geogrid at the back of the reinforced zone. Backfill shall be placed in horizontal layers not exceeding 250 mm or 150 mm in uncompacted thickness for heavy or lightweight compaction equipment respectively.

4.5.2 Backfill shall be placed from the slope face towards the ends of the Geogrid to promote proper tensioning.

4.5.3 Backfill shall be placed at a moisture content no greater than two percent wet and no less than one percent dry of optimum moisture content and compacted to a minimum of 90% R.C. Overbuilding of slope may be required to achieve proper compaction at finished slope face.

4.5.4 At the end of each workday, backfill surface shall be graded away from the slope face a minimum of two percent slope. The backfill surface shall be compacted with a smooth drum roller to minimize ponding of water and saturation of the backfill. A temporary soil berm shall be constructed near the crest to prevent surface water runoff from overtopping.

5.0 SPECIAL PROVISIONS

5.1 The design presented herein is only valid for the Geogrid or equivalent system. The design is based on soil parameters, foundation conditions, groundwater conditions, and loadings stated in section 3.0. Geotechnical Engineer assumes no liability for interpretation or verification of subsurface conditions, for suitability of soil design parameters or for interpretation of subsurface groundwater conditions. State shall verify that actual site conditions, parameters, and geometries are as described herein prior to and during construction. Proceeding with construction without first verifying conditions and parameters discussed above shall absolve Geotechnical Engineers from all liability for the design and construction of this structure and the Contractor shall indemnify and hold harmless State and its representatives from all resulting claims, damages, losses and expenses.

5.0 SPECIAL PROVISIONS (CONTD.)

5.2 State shall provide Quality Assurance and Quality Control Programs that ensure construction of the reinforced backfill is performed in accordance with the contract plans and specifications.

5.3 Any changes in subsurface conditions or design shall be immediately reported to the State Geotechnical Engineer prior to proceeding with construction.

Caltrans Metric

DIST.	COUNTY	ROUTE	KILOMETER POST TOTAL PROJECT	SHEET NO.	TOTAL SHEETS
04	SF	80	12.6/13.2	20E	33

REGISTERED ENGINEER - CIVIL

PLANS APPROVAL DATE

REGISTERED PROFESSIONAL ENGINEER — A.L. ELY — No. 18880 — Exp. 6-30-11 — CIVIL — STATE OF CALIFORNIA

The State of California or its officers or agents shall not be responsible for the accuracy or completeness of electronic copies of this plan sheet.

T.Y. LIN / MOFFATT & NICHOL
TWO HARRISON STREET
SAN FRANCISCO, CA 94105

CONTRACT NO. 04-0120R4
SUPPLEMENTAL SHEET
CONTRACT CHANGE ORDER NO. 75-S1
SHEET 8 OF 9

ALL DIMENSIONS ARE IN METERS UNLESS OTHERWISE SHOWN

SAN FRANCISCO OAKLAND BAY BRIDGE
EAST SPAN SEISMIC SAFETY PROJECT

YBI TRANSITION STRUCTURES

ADVANCE CONST PACKAGE NO. 2RO

REINFORCED BACKFILL DETAILS NO.5

DESIGN OVERSIGHT — JUAN F. CARPIO — SIGN OFF DATE

	BY	CHECKED
DESIGN	Kapuskar	Lee
DETAILS	Samson	Ely
QUANTITIES		

PREPARED FOR THE STATE OF CALIFORNIA DEPARTMENT OF TRANSPORTATION

Jal Birdy — PROJECT ENGINEER

BRIDGE NO. 34-0006 L/R
KILOMETER POST 12.8

CU 04251
EA 0120S1

DISREGARD PRINTS BEARING EARLIER REVISION DATES →

REVISION DATES (PRELIMINARY STAGE ONLY): 2/23/09 | 9/11/09

SHEET 4E OF 17

Rev. Date: 5-18-98

ORIGINAL SCALE IN MILLIMETERS FOR REDUCED PLANS 0 10 20 30 40 50 60 70 80 90 100

FILE => p:\4141-06\CADD\TS\Final Const 3\Adv Const Pkg 2RO\Revision 091109\edexc0-4E.dgn

Sept 11, 2009

TIME PLOTTED => 2:42:24 PM
DATE PLOTTED => 9/11/2009
USERNAME => fsamson

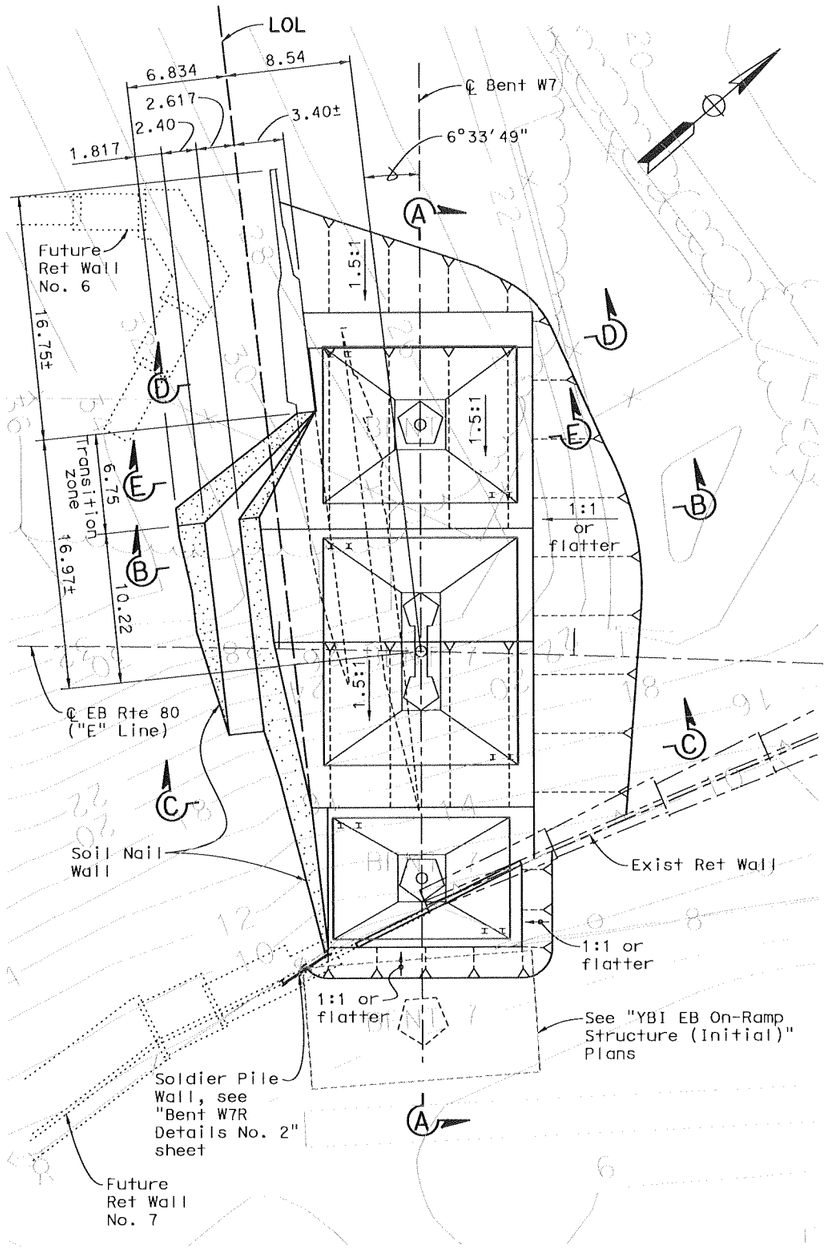

FOUNDATION EXCAVATION PLAN
1:200

Note: Upper 0.6m of existing soil at north footing of Bent W7L is considered hazardous with restricted disposal requirements.

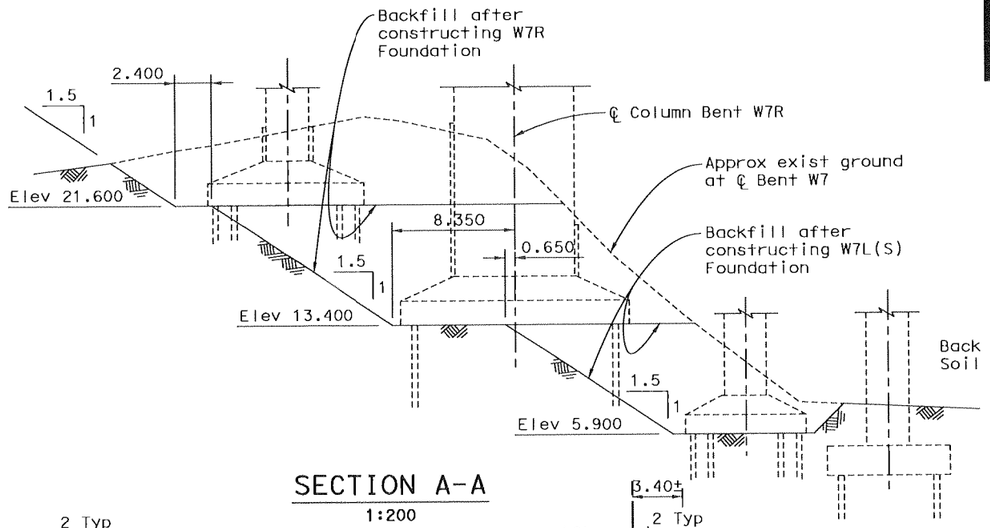

SECTION A-A
1:200

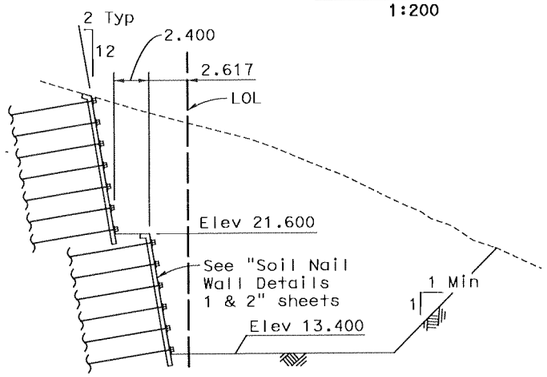

SECTION B-B
1:200

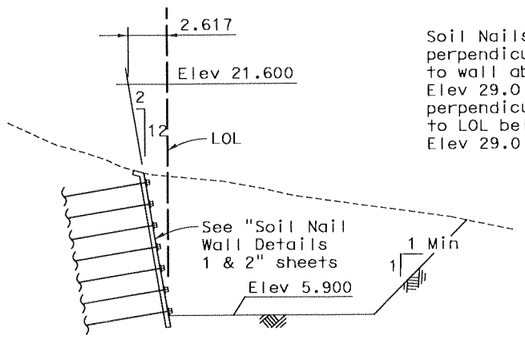

SECTION C-C
1:200

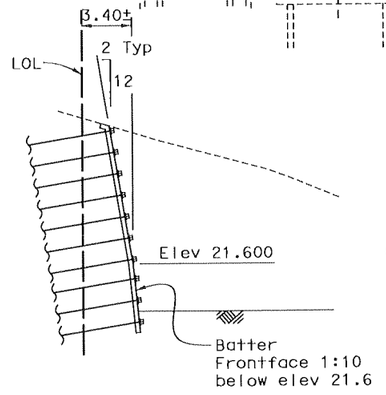

SECTION D-D
1:200

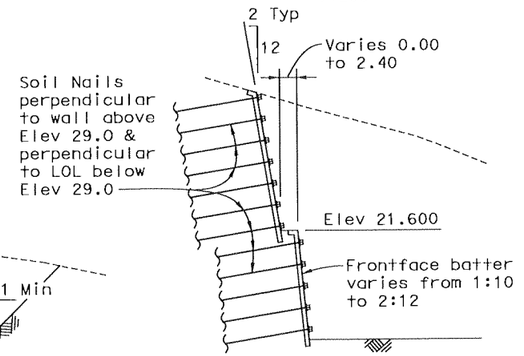

SECTION E-E
(TRANSITION ZONE)
1:200

ALL DIMENSIONS ARE IN METERS UNLESS OTHERWISE SHOWN

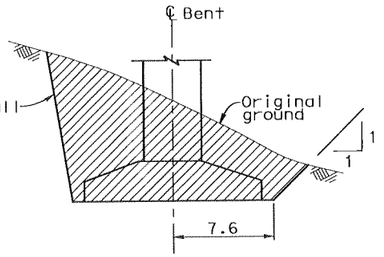

STRUCTURE EXCAVATION

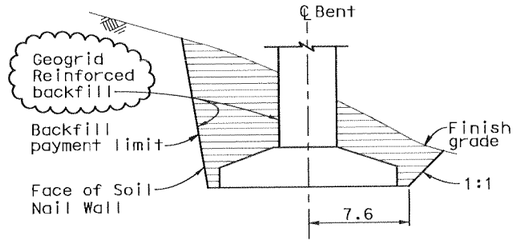

STRUCTURE BACKFILL

LIMITS OF PAYMENT FOR STRUCTURE EXCAVATION & BACKFILL

For Details not shown see A62C
NO SCALE

CONTRACT NO. 04-0120R4
SUPPLEMENTAL SHEET

CONTRACT CHANGE ORDER NO. 75-S1
SHEET 3 OF 9

DIST.	COUNTY	ROUTE	KILOMETER POST TOTAL PROJECT	SHEET NO.	TOTAL SHEETS
04	SF	80	12.6/13.2	20R4	33

REGISTERED ENGINEER - CIVIL
PLANS APPROVAL DATE
The State of California or its officers or agents shall not be responsible for the accuracy or completeness of electronic copies of this plan sheet.
REGISTERED PROFESSIONAL ENGINEER A.L. ELY No. 18880 Exp. 6-30-11 CIVIL STATE OF CALIFORNIA

T.Y. LIN / MOFFATT & NICHOL
TWO HARRISON STREET
SAN FRANCISCO, CA 94105

DESIGN OVERSIGHT		DESIGN	BY / CHECKED
JOHN MOOK, BERNARD CHAN, JUAN F. CARPIO		DETAILS	van Ryn/Zucchi/Mai / Jain
SIGN OFF DATE		QUANTITIES	Liao / E. Nichol

PREPARED FOR THE STATE OF CALIFORNIA DEPARTMENT OF TRANSPORTATION

Jal Birdy
PROJECT ENGINEER

BRIDGE NO.	
34-0006 L/R	
KILOMETER POST	
12.8	

SAN FRANCISCO OAKLAND BAY BRIDGE
EAST SPAN SEISMIC SAFETY PROJECT

YBI TRANSITION STRUCTURES
ADVANCE CONST PACKAGE NO. 2RO
EXCAVATION PLAN AT BENT W7

CU 04251
EA 0120S1

DISREGARD PRINTS BEARING EARLIER REVISION DATES

REVISION DATES (PRELIMINARY STAGE ONLY)										SHEET	OF
2/23/09	2/27/09	9/11/09	5/29/07	5/29/08	8/26/08	9/4/08	9/26/08	9/29/08	11/13/08	4R4	17

ORIGINAL SCALE IN MILLIMETERS FOR REDUCED PLANS 0 10 20 30 40 50 60 70 80 90 100

Rev. Date: 5-18-98

FILE => p:\4141-06\CADD\TS\Final Const 3\Adv Const Pkg 2R0\Revision 091109\edexc0.dgn

Sept 11, 2009

DATE PLOTTED => 9/11/2009 TIME PLOTTED => 2:41:21 PM USERNAME => fsamson

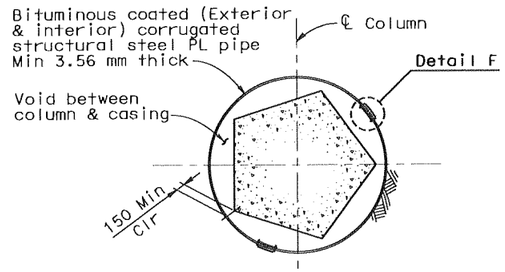

SECTION A-A

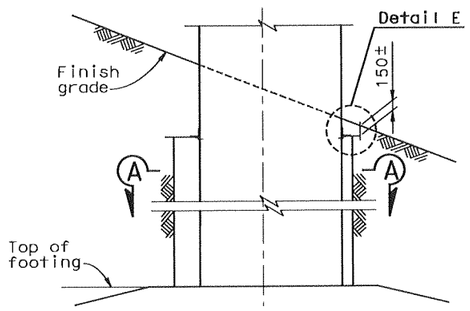

ELEVATION

ISOLATION SLEEVE
NORTH COLUMN BENT W7L
1:60

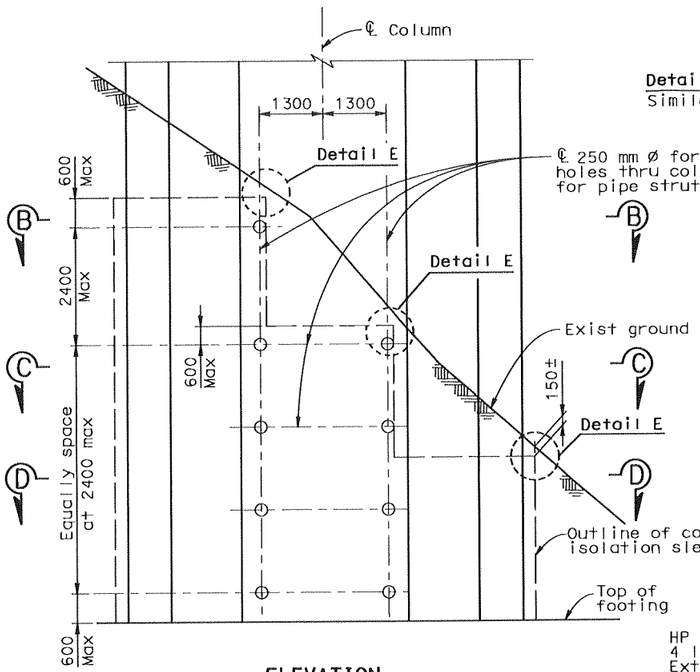

ELEVATION

ISOLATION SLEEVE
BENT W7R
1:60

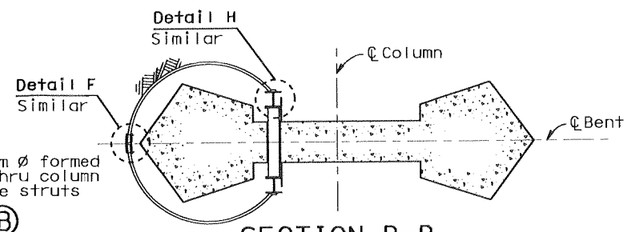

SECTION B-B
1:60

Note: For details not shown see Section D-D

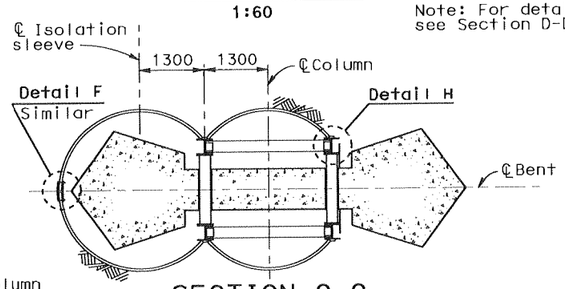

SECTION C-C
1:60

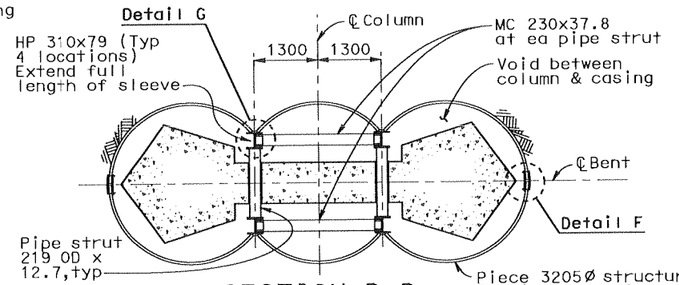

SECTION D-D
1:60

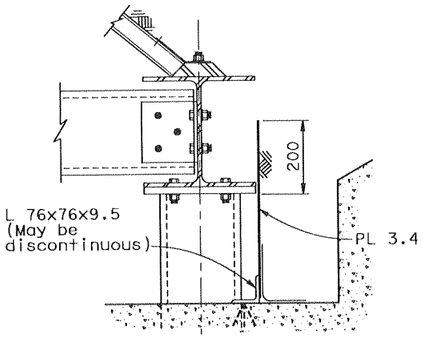

DETAIL H
Note: See Details E & G for details not shown
1:8

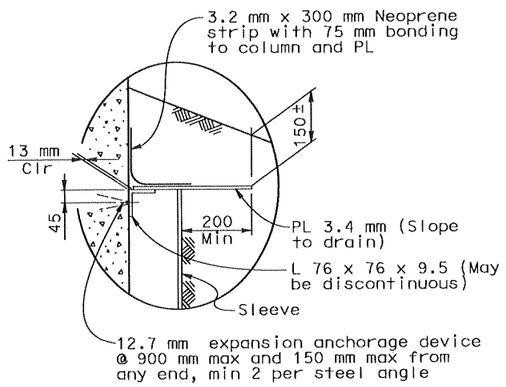

DETAIL E
No Scale

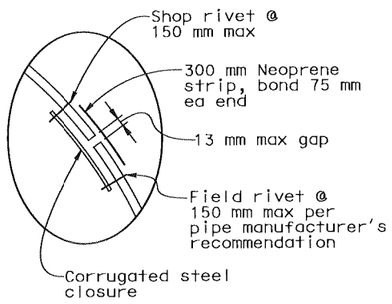

DETAIL F
No Scale

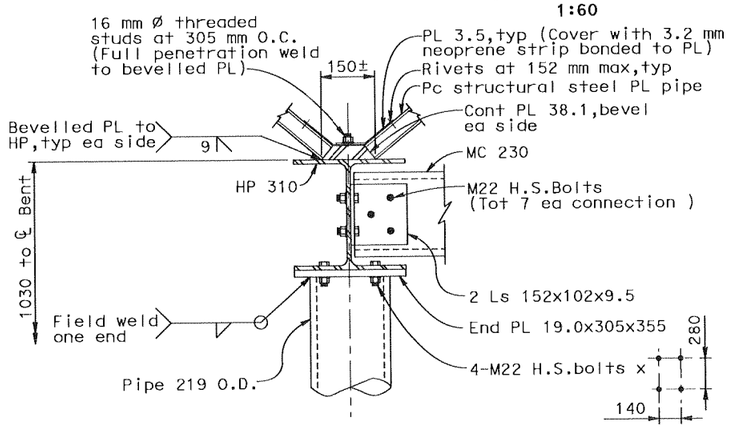

DETAIL G
1:8

Note: Structural plates and shapes for column isolation sleeves to be galvanized and bituminous coated.

DIST.	COUNTY	ROUTE	KILOMETER POST TOTAL PROJECT	SHEET NO.	TOTAL SHEETS
04	SF	80	12.6/13.2	30R1	33

REGISTERED ENGINEER - CIVIL

PLANS APPROVAL DATE

A.L. ELY No. 18880 Exp. 6-30-11 CIVIL — REGISTERED PROFESSIONAL ENGINEER — STATE OF CALIFORNIA

The State of California or its officers or agents shall not be responsible for the accuracy or completeness of electronic copies of this plan sheet.

T.Y. LIN / MOFFATT & NICHOL
TWO HARRISON STREET
SAN FRANCISCO, CA 94105

CONTRACT NO. 04-0120R4
SUPPLEMENTAL SHEET
CONTRACT CHANGE ORDER NO. 75-S1
SHEET 9 OF 9

ALL DIMENSIONS ARE IN MILLIMETERS UNLESS OTHERWISE SHOWN

SAN FRANCISCO OAKLAND BAY BRIDGE
EAST SPAN SEISMIC SAFETY PROJECT

YBI TRANSITION STRUCTURES
ADVANCE CONST PACKAGE NO. 2RO
COLUMN ISOLATION SLEEVE DETAILS

DESIGN OVERSIGHT
JOHN MOOK, BERNARD CHAN, JUAN F. CARPIO
SIGN OFF DATE

	BY	CHECKED
DESIGN	Jain	Desai
DETAILS	van Ryn/Zucchi/Mai	Jain
QUANTITIES	Liao	E. Nichol

PREPARED FOR THE STATE OF CALIFORNIA
DEPARTMENT OF TRANSPORTATION

Jal Birdy
PROJECT ENGINEER

BRIDGE NO. 34-0006 L/R
KILOMETER POST 12.8

CU 04251
EA 0120S1

DISREGARD PRINTS BEARING EARLIER REVISION DATES

REVISION DATES (PRELIMINARY STAGE ONLY): 11/14/06 | 11/27/06 | 11/29/06 | 5/23/07 | 5/8/08 | 9/11/09 | 7/2/06 | 5/14/06 | 10/17/06 | 11/18/06

SHEET 14R1 OF 17

ORIGINAL SCALE IN MILLIMETERS FOR REDUCED PLANS 0 10 20 30 40 50 60 70 80 90 100

Rev. Date: 5-16-98

FILE => p:\4141-06\CADD\TS\Final Const 3\Adv Const Pkg 2R0\Revision 091109\eeco101det.dgn

Sept 11, 2009

TIME PLOTTED => 2:42:35 PM
DATE PLOTTED => 9/11/2009
USERNAME => fsamson

STATE OF CALIFORNIA - DEPARTMENT OF TRANSPORTATION

CONTRACT CHANGE ORDER MEMORANDUM

TO: MIKE FORNER / DEANNA VILCHECK	FILE: E.A. 04 - 0120R4
	CO-RTE-PM SF-80-12.6/13.2
FROM: BILL CASEY	FED. NO. ACBRIM-080-1(097)N
CCO#: 75 SUPPLEMENT#: 1 Category Code: BZZZ	CONTINGENCY BALANCE (incl. this change) **$32,445,518.59**
COST: **$910,810.00** INCREASE ☑ DECREASE ☐	HEADQUARTERS APPROVAL REQUIRED? ☑ YES ☐ NO
SUPPLEMENTAL FUNDS PROVIDED: **$0.00**	IS THIS REQUEST IN ACCORDANCE WITH ENVIRONMENTAL DOCUMENTS? ☑ YES ☐ NO
CCO DESCRIPTION: Bent W7 Backfill & Deleted Polyurathane	**PROJECT DESCRIPTION:** CONSTRUCT ROUTE 80 TEMP BYPASS STRUCTURE

Original Contract Time:	Time Adj. This Change:	Previously Approved CCO Time Adjustments:	Percentage Time Adjusted: (including this change)	Total # of Unreconciled Deferred Time CCO(s): (including this change)
475 Day(s)	DEF Day(s)	1195 Day(s)	252 %	8

THIS CHANGE ORDER PROVIDES FOR:

modifications to the structural backfill and the elimination of the specified polyurethane fill material for the corrugated steel pipe isolation sleeves for Bents W7L and W7R of the Yerba Buena Island Transition Structure (Br. No. 34-0006L/R).

This project, the Yerba Buena Island Detour (YBID), calls for the construction of a temporary detour for both eastbound and westbound I-80 traffic that will allow for the tie in of the new east span of the San Francisco Oakland Bay Bridge to Yerba Buena Island. The YBID encompasses three main structures, the East Tie-In to the existing bridge, the West Tie-In (WTI) to Yerba Buena Island, and the Viaduct structure between the two tie ins. The contract was awarded as a performance-based project with the contractor responsible for meeting the design criteria specified in the contract.

The Department issued a December 25, 2006 strategy memo which was approved by Tony Anziano (Toll Bridge Program Manager), Richard Land (Chief Engineer) and subsequently by the TBPOC that called for the advance construction of foundation work for the Yerba Buena Island Transition Structure (YBITS) under this contract.

The original Change Order No. 75 provided for the advance construction of Bent W7L and Bent W7R of the Yerba Buena Island Transition Structure (YBITS). Under that change order, compensation for the specified placement of polyurethane fill material for the corrugated steel pipe isolation sleeves and the specified placement of cement modified structure backfill and topsoil were deferred pending a clear understanding of the scope of this work.

Toll Bridge Design has now issued revised plan sheets that eliminate the placement of the polyurethane fill material and changes the cement modified structural backfill to a reinforced backfill employing geogrid reinforcement. This change order provides for these revisions to the plan sheets and provides compensation for the placement of the reinforced backfill and geogrid reinforcement.

The backfill work encompassed under this change includes the placement of approximately 6,500 cubic meters of soil and 50 layers of geogrid reinforcement.

Compensation for the placement of the reinforced backfill shall be paid as extra work at an agreed lump sum price of $910,810.00, which shall be financed from the contract's contingency funds. A cost analysis is on file.

No adjustment of compensation shall be made for the elimination of the placement of polyurethane material for the corrugated steel pipe isolation sleeves or for the elimination of the placement of imported topsoil as these costs were deferred under the original Contract Change Order No. 75.

Adjustment of contract time is deferred pending completion of the work specified in this change as it may become the controlling operation in accordance with Section 8-1.07 "Liquidated Damages", of the Standard Specifications and Section 10-1.20 "Time Related Overhead (TRO)" of the Special Provisions.

Compensation for delays resulting from this work will be made in accordance with Section 8-1.09 "Right of Way Delays" of the Standard Specifications and Section 10-1.20 "Time Related Overhead" of the Special Provisions.

This change was concurred by Alec Melkonians - Asst. Project Manager, Hong Wong - Project Engineer, Lina Ellis - Maintenance, and Patrick Treacy - HQ Asst. Construction Coordinator. TBPOC Approval granted on July 15, 2009.

ADA Notice: For individuals with sensory disabilities, this document is available in alternate formats. For information call: (916) 654-6410 or TDD (916) 654-3880 or write

FHWA concurrence is not required as they are no longer providing funds for this project.

CONCURRED BY:		
Construction Engineer:	Bill Casey, Resident Engineer	Date 7-15-09
Bridge Engineer:		Date
Project Engineer:	Hong Wong, PE	Date 7/15/09
Project Manager:	Alec Melkonians	Date 7/15/09
FHWA Rep.:		Date
Environmental:		Date
Other (specify):	Patrick Treacy, HQ Asst.Const.Co	Date
Other (specify):	Lina Ellis - Maintenance	Date 7-15-09
District Prior Approval By:		Date
HQ (Issue Approve) By:	Bob Molera, HQ CCO Engineer	Date 7/7/09
Resident Engineer's Signature:		Date

7-15-09

ESTIMATE OF COST

	THIS REQUEST	TOTAL TO DATE
ITEMS	$0.00	$0.00
FORCE ACCOUNT	$0.00	$0.00
AGREED PRICE	$910,810.00	$14,035,810.00
ADJUSTMENT	$0.00	$0.00
TOTAL	$910,810.00	$14,035,810.00

FEDERAL PARTICIPATION

☐ PARTICIPATING ☐ PARTICIPATING IN PART ☑ NONE
☐ NON-PARTICIPATING (MAINTENANCE) ☐ NON-PARTICIPATING

FEDERAL SEGREGATION (if more than one Funding Source or P.I.P. type)
☐ CCO FUNDED PER CONTRACT ☐ CCO FUNDED AS FOLLOWS

FEDERAL FUNDING SOURCE	PERCENT

ADA Notice: For individuals with sensory disabilities, this document is available in alternate formats. For information call: (916) 654-6410 or TDD (916) 654-3880 or write

STATE OF CALIFORNIA - DEPARTMENT OF TRANSPORTATION

CONTRACT CHANGE ORDER

Change Requested by: Engineer

CCO 76	Suppl. No. 0	Contract No. 04 - 0120R4	Road SF-80-12.6/13.2	FED. AID LOC.: ACBRIM-080-1(097)N

To: **CC MYERS INC**

You are directed to make the following changes from the plans and specifications or do the following described work not included in the plans and specifications for this contract. ***NOTE: This change order is not effective until approved by the Engineer.***

Description of work to be done, estimate of quantities and prices to be paid. (Segregate between additional work at contract price, agreed price and force account.) Unless otherwise stated, rates for rental of equipment cover only such time as equipment is actually used and no allowance will be made for idle time. This last percentage shown is the net accumulated increase or decrease from the original quantity in the Engineer's Estimate.

Extra Work at Lump Sum:

Perform the following work in preparation for the Labor Day Weekend bridge removal of the existing columns and upper deck of the Yerba Buena Tunnel (Bridge No. 33-0004) concrete viaduct from Bent 38 to Bent 48:

1) Mobilize and procure the use of a Manitoc 888 crane with ringer attachment to the project site.

2) Mobilize a Liebherr LR1400/2 crawler crane to the project site.

3) Mobilize two (2) each Manitoc M250 Series 2 cranes to the project site .

4) Mobilize a Grove GMK6350 crane to the project site.

5) Mobilize two (2) each Liebherr LTM 1160/2 cranes to the project site.

6) Mobilize a backup crawler crane to the project site.

7) Mobilize eight (8) each 14-axle hydraulic platform trailers (Goldhofer THP/H14) to the project site.

8) Mobilize and procure the use of six (6) each 40 Ft. flat deck trailers with crane mats and perimeter rails to the project site

9) Mobilize and procure the use of all rigging necessary for the planned lifting of the girders and edge beams.

10) Provide all engineering and site supervision for the mobilization and use of specialized cranes, rigging and transport equipment provided for the bridge removal work.

11) Provide all materials, labor and equipment for the construction of the north crane pad in accordance with the Contractor's bridge removal plan.

12) Procure and perform site preparation for the debris stockpile area at the Port of Oakland property in accordance with the Contractor's bridge removal plan.

13) Mobilize fourteen (14) each excavators for the bridge removal work.

14) Prepare an approved demolition plan for the bridge removal work defined under this change order.

15) Mobilize a fuel tank to the project site.

16) Furnish plywood for the protection of the lower deck roadway during bridge removal activities.

17) Furnish replacement hoses and chisels for the bridge removal work.

For this work, the Contractor shall be compensated a lump sum of $2,240,300.00.

CONTRACT CHANGE ORDER

Change Requested by: Engineer

CCO 76	Suppl. No. 0	Contract No. 04 - 0120R4	Road SF-80-12.6/13.2	FED. AID LOC.: ACBRIM-080-1(097)N

The intent of this change order is to authorize and provide compensation for all known costs for the work described above in order for the Contractor to prepare for the scheduled Labor Day Weekend bridge removal. This compensation represents only an estimate of the costs concerning this work. Upon the determination or agreement concerning the actual costs of the bridge removal work as defined under this change order, a supplemental change order shall be issued to provide full compensation with the payment provided under this change order being credited to the Department.

Total Cost of Extra Work at Lump Sum $2,240,300.00

Estimated Cost: Increase ☑ Decrease ☐ **$2,240,300.00**

By reason of this order the time of completion will be adjusted as follows: 0 days

Submitted by

Signature	Resident Engineer	Date
M. U. Anigol	MAHANTESH ANIGOL	7/18/07

Approval Recommended by

Signature	SFOBB Construction Manager	Date
Mike Forner	MIKE FORNER	7/18/07

Engineer Approval by

Signature	SFOBB Construction Manager	Date
Mike Forner	MIKE FORNER	7/20/07

We the undersigned contractor, have given careful consideration to the change proposed and agree, if this proposal is approved, that we will provide all equipment, furnish the materials, except as may otherwise be noted above, and perform all services necessary for the work above specified, and will accept as full payment therefor the prices shown above.

NOTE: If you, the contractor, do not sign acceptance of this order, your attention is directed to the requirements of the specifications as to proceeding with the ordered work and filing a written protest within the time therein specified.

Contractor Acceptance by

Signature	(Print name and title)	Date
K Hamick	DANIEL E. HAMICK, PRESIDENT	7/19/07

STATE OF CALIFORNIA - DEPARTMENT OF TRANSPORTATION

CONTRACT CHANGE ORDER MEMORANDUM

TO: MIKE FORNER / DENNIS TURCHON	FILE: **E.A.** 04 - 0120R4
	CO-RTE-PM SF-80-12.6/13.2
FROM: MAHANTESH ANIGOL	**FED. NO.** ACBRIM-080-1(097)N
CCO#: **76** SUPPLEMENT#: **0** Category Code: **CHPA**	CONTINGENCY BALANCE (incl. this change) **$26,529,720.65**
COST: **$2,240,300.00** INCREASE ☑ DECREASE ☐	HEADQUARTERS APPROVAL REQUIRED? ☑ YES ☐ NO
SUPPLEMENTAL FUNDS PROVIDED: **$0.00**	IS THIS REQUEST IN ACCORDANCE WITH ENVIRONMENTAL DOCUMENTS? ☑ YES ☐ NO
CCO DESCRIPTION: WTI Labor Day Bridge Demo / Move-In	**PROJECT DESCRIPTION:** CONSTRUCT ROUTE 80 TEMP BYPASS STRUCTURE

Original Contract Time:	Time Adj. This Change:	Previously Approved CCO Time Adjustments:	Percentage Time Adjusted: (including this change)	Total # of Unreconciled Deferred Time CCO(s): (including this change)
475 Day(s)	**0** Day(s)	**381** Day(s)	**80** %	**7**

THIS CHANGE ORDER PROVIDES FOR:

compensation to the contractor for mobilization and site preparation costs associated with the planned Labor Day Weekend bridge removal.

This contract was awarded on March 10, 2004 to construct a temporary detour for both eastbound and westbound I-80 traffic that allows for the tie in of the east span of the new San Francisco Oakland Bay Bridge (SFOBB) to Yerba Buena Island. The detour consist of three main structures, the east tie in to the bridge, the west tie in to the island and the viaduct structure between the two tie ins. The contract was awarded as a performance based project with the contractor responsible for meeting the design criteria specified in the contract. This change order concerns additional bridge removal costs pertaining to Department changes to the work of the West Tie In (WTI) structure.

Throughout the project's design approval process, the Department lacked comfort concerning numerous components of the contractor's proposed design. Concurrent to this design approval process, the main SFOBB Self Anchored Suspension Bridge (SAS) project, for which this project is a precursor, was incurring significant delay. This delay to the SAS presented 2 issues or opportunities to this project. First, it will result in the detour structure being in use for a significantly longer period than originally anticipated and second, it provided a schedule window that allows for a more thorough design concept to be implemented.

Presented with this opportunity, the Department issued a December 14, 2006 memo titled Strategy for South-South Detour Contract Completion which was approved by both Tony Anziano (Toll Bridge Program Manager) and Richard Land (Chief Engineer). This strategy memo provided for the retrofit of the existing upper deck structure at the WTI to be incorporated into this project. Previously, this retrofit work would have been performed after the completion of the SAS project.

The upper deck retrofit shall be implemented during a complete closure of the SFOBB on Labor Day Weekend of 2007. The retrofit calls for the demolition of the existing upper deck with the new permanent structure, currently being constructed adjacent to the existing structure, being rolled into place after the bridge removal work is competed. Compensation provided under this change order concerns pre-Labor Day Weekend work required to be performed by the bridge removal subcontractor.

The contractor has submitted a cost proposal for approximately $6,700,000 for the Labor Day Weekend work to be performed by the bridge removal subcontractor. Negotiations are currently under way concerning this submittal but are not expected to be completed until August of 2007. This change order is being issued in order to authorize and provide compensation for mobilization and site preparation costs that need to be performed prior to the weekend work. Compensation is based on a force account analysis of the work authorized under the change order.

Failure to proceed with this mobilization and site preparation work would cause the Labor Day Weekend closure window to be missed which would result in major delays, not only to this project, but to the entire East Span Seismic Retrofit Program.

Compensation shall be paid as extra work at a lump sum of $2,240,300.00 which shall be financed from the contract's contingency funds. A cost analysis is on file.

ADA Notice: For individuals with sensory disabilities, this document is available in alternate formats. For information call: (916) 654-6410 or TDD (916) 654-3880 or write Records and Forms Management, 1120 N Street, MS-89, Sacramento, CA 95814.

Upon a determination or agreement on the final costs associated with this work, the compensation paid under this change order shall be credited to the Department and a supplemental change order shall be issued to finalize these costs.

Additional costs concerning Labor Day Weekend traffic management, support costs and the bridge roll in operation are not addressed under this change order.

Maintenance concurrence is not required as this bridge demolition work doesn't affect any permanent roadway features.

CONCURRED BY:		
Construction Engineer:	Mahantesh Anigol	Date 7/18/07
Bridge Engineer:	Bill Casey, Struct. Rep	Date 7/19/07
Project Engineer:	Hong Wong	Date 7/20/07
Project Manager:	Alec Melkonians	Date 7/19/07
FHWA Rep.:		Date
Environmental:		Date
Other (specify):	Robert Kobal, HQ Asst.Const.Coor	Date 7/18/07
Other (specify):		Date
District Prior Approval By:		Date
HQ (Issue Approve) By:	Ken Darby, HQ CCO Engineer	Date
Resident Engineer's Signature:		Date
M. U. Anigol		7/18/07

ESTIMATE OF COST		
	THIS REQUEST	TOTAL TO DATE
ITEMS	$0.00	$0.00
FORCE ACCOUNT	$0.00	$0.00
AGREED PRICE	$2,240,300.00	$2,240,300.00
ADJUSTMENT	$0.00	$0.00
TOTAL	$2,240,300.00	$2,240,300.00

FEDERAL PARTICIPATION

☐ PARTICIPATING ☐ PARTICIPATING IN PART ☑ NONE
☐ NON-PARTICIPATING (MAINTENANCE) ☐ NON-PARTICIPATING

FEDERAL SEGREGATION (if more than one Funding Source or P.I.P. type)
☑ CCO FUNDED PER CONTRACT ☐ CCO FUNDED AS FOLLOWS

FEDERAL FUNDING SOURCE	PERCENT

ADA Notice: For individuals with sensory disabilities, this document is available in alternate formats. For information call: (916) 654-6410 or TDD (916) 654-3880 or write Records and Forms Management, 1120 N Street, MS-89, Sacramento, CA 95814.

CONTRACT CHANGE ORDER

Change Requested by: Engineer

CCO 76	Suppl. No. 1	Contract No. 04 - 0120R4	Road SF-80-12.6/13.2	FED. AID LOC.: ACBRIM-080-1(097)N

To: **CC MYERS INC**

You are directed to make the following changes from the plans and specifications or do the following described work not included in the plans and specifications for this contract. ***NOTE: This change order is not effective until approved by the Engineer.***

Description of work to be done, estimate of quantities and prices to be paid. (Segregate between additional work at contract price, agreed price and force account.) Unless otherwise stated, rates for rental of equipment cover only such time as equipment is actually used and no allowance will be made for idle time. This last percentage shown is the net accumulated increase or decrease from the original quantity in the Engineer's Estimate.

Eliminate the partial bridge demolition of the Yerba Buena Tunnel (Bridge No. 33-0004) concrete viaduct specified under the West Tie-In bridge removal plans (Contract Plan Sheets 107 through 115A).

Estimate of Decrease in Contract Item at Contract Price:

Item No. 41: BRIDGE REMOVAL (PORTION) LOCATION A
-1 LS (–100.00%) 1,410,000.00 /LS =–$1,410,000.00 (–100.00%)

There will be no adjustment for the elimination of Item No. 41 Bridge Removal (Portion), Location A.

Total cost for Decrease in Contract Item.....($1,410,000.00)

Extra Work at Force Account:

In accordance with Section 9-1.03B "Work Performed by Special Forces or Other Special Services" of the Standard Specifications, the Contractor shall reimburse the City of San Francisco, City of Oakland, City of San Rafael and the City of Hayward in order that these cities provide traffic control officers at locations designated by the Engineer in order to minimize regional traffic disruptions caused by the 2007 Labor Day Weekend closure of the SFOBB. The Contractor shall pay the amount of each invoice submitted by these cities within 30 calendar days of their approval by the Engineer.

Provide a water taxi from Pier 7 to the U.S Coast Guard facilities during the period that access is restricted to these facilities due to the work of this change order as determined by the Engineer.

Estimated Cost of Extra Work at Force Account.....$1,000,000.00

Extra Work at Lump Sum:

Perform the following work pertaining to the replacement of the upper deck of the Yerba Buena Tunnel (Bridge No. 33-0004) concrete viaduct 2007 Labor Day Weekend closure of the San Francisco Oakland Bay Bridge (SFOBB):

1) Furnish, install and maintain a maximum of 150 (EA) programmable changeable message signs at the designated locations as shown on Pages No. 4 through 13 of this change order and as determined by the Engineer. All signs shall be placed in accordance with the dates and messages as listed on Pages No. 4 through 13 of this change order.

2) Furnish, install and remove all temporary signing as shown on Pages No. 4 through 8 of this change order prior to the implementation of the Labor Day Weekend SFOBB closure.

3) Provide all traffic control necessary for the work of this change and to implement the SFOBB Labor day weekend closure in accordance with Pages No. 4 through 8 of this change order. Traffic control shall include providing access to Yerba Buena Island and Treasure Island from the City of San Francisco and providing all traffic control on the islands as determined by the Engineer.

4) Perform the bridge removal of the existing columns and upper deck of the Yerba Buena Tunnel (Bridge No. 33-0004) concrete viaduct in accordance with Sheet No. 101 and all applicable specifications of Change Order No. 61, Supplement No. 1 to allow for the replacement structure to be moved into its permanent location.

5) Move the replacement structure, the YBI Viaduct Replacement (Bridge No. 34-0006) as specified under Change Order No. 61, Supplement No. 1, into place after the existing structure has been removed.

CCO 76	Suppl. No. 1	Contract No. 04 - 0120R4	Road SF-80-12.6/13.2	FED. AID LOC.: ACBRIM-080-1(097)N

6) Perform pavement grinding and place asphalt concrete to transition the eastern end of the new structure to the existing structure as determined by the Engineer. The Contractor shall provide a redundant set of backup paving equipment and keep 2 asphalt concrete plants on standby as part of this work. All asphalt concrete paving crews and equipment, trucking, asphalt concrete plants and an asphalt concrete grinder shall be provided on standby from 4:00 a.m. September 2, 2007.

7) Perform pavement grinding and place 75 mm of asphalt concrete to replace the damaged roadway of the Yerba Buena Island Eastbound On Ramp adjacent to the construction staging area of the replacement structure of the YBI Viaduct Replacement (Bridge No. 34-0006). This work shall be performed immediately after the conform paving listed under Item No. 6 is completed.

8) Install all pavement delineation necessary for opening the upper and lower decks of the SFOBB and Yerba Buena Islanc Eastbound On Ramp to traffic and place temporary pavement delineation for the pre-Labor Day Weekend grinding of the upper deck.

9) Form and place the deck closure pours and furnish and install joint seals as shown on Sheets No. 112 and No. 114 of Change Order No. 61, Supplement No. 1.

10) Remove the existing temporary concrete barrier (Type K) from the existing structure and place temporary concrete barrier (Type K) on the new structure as shown on Sheet No. 92 of Change Order No. 61, Supplement No. 1.

11) Prepare a contingency plan in the event the bridge replacement work results in a catastrophic failure of the structure and provide all long lead time materials necessary in the event the plan needs to be implemented.

12) Provide all labor, equipment and materials, including all standby labor and equipment, to support the work associated with Items 1 through 11 above.

For this work, the Contractor shall be compensated an agreed lump sum of $10,554,140.00. This lump sum, along with the compensation paid under the original Change Order No. 76, constitutes full and final compensation, including all markups, for the work specified under this change order. No additional compensation shall be provided except for the work specified herein to be paid at force account.

The work of this change order shall be performed under a full closure of the San Francisco Oakland Bay Bridge from 8:00 P.M., August 31 to 5:00 A.M. September 4, 2007. The closure shall be performed in accordance with the freeway and ramp closures shown on Pages 1 through 5 of this change order along with the installation and maintenance of the changeable message signs and temporary signing shown on Pages 3 through 11 of this change order. The Contractor shall coordinate the completion of the bridge removal work in order to allow for the replacement structure to be moved into place and the bridge opened to traffic within this allotted closure period.

Compensation paid under Change Order No. 58, pertaining to the preparation of bridge removal plans by Silverado Constructors, as of the July 2007 Progress Pay Estimate shall be considered final payment and no additional compensation shall be paid for the work of that change order.

CONTRACT CHANGE ORDER

Change Requested by: Engineer

CCO 76	Suppl. No. 1	Contract No. 04 - 0120R4	Road SF-80-12.6/13.2	FED. AID LOC.: ACBRIM-080-1(097)N

Estimated Cost: Increase ☑ Decrease ☐ **$10,144,140.00**

By reason of this order the time of completion will be adjusted as follows: 0 days

Submitted by

Signature	Resident Engineer	Date
M. U. Anigol	MAHANTESH ANIGOL	8/27/07

Approval Recommended by

Signature	SFOBB Construction Manager	Date
Michael Forner	MIKE FORNER	8/28/07

Engineer Approval by

Signature	SFOBB Construction Manager	Date
Michael Forner	MIKE FORNER	8/31/07

We the undersigned contractor, have given careful consideration to the change proposed and agree, if this proposal is approved, that we will provide all equipment, furnish the materials, except as may otherwise be noted above, and perform all services necessary for the work above specified, and will accept as full payment therefor the prices shown above.

NOTE: If you, the contractor, do not sign acceptance of this order, your attention is directed to the requirements of the specifications as to proceeding with the ordered work and filing a written protest within the time therein specified.

Contractor Acceptance by

Signature	(Print name and title)	Date
D E Hinrick	DANIEL E. HINRICK, PRESIDENT	8/31/07

DETOUR NOTES:

1. Close EB Route 80 at 7th Street off-ramp.
2. Open EB Route 80 on-ramp from Sterling St. for EB Route 80 off-ramp (left) to Treasure Island and Yerba Buena Island.
3. Close EB Route 80 on-ramp from 8th and Bryant Streets.
4. Close EB Route 80 on-ramp from 5th and Bryant Streets.
5. Close Bryant St. WB at Beale.
6. Close EB Route 80 on-ramp from Harrison, Essex, and 1st Streets

REGISTERED PROFESSIONAL ENGINEER
ALEC MELKONIANS
C 053452
Exp. 6/30/09
CIVIL
STATE OF CALIFORNIA

DIST	COUNTY	ROUTE	KILOMETER POST TOTAL PROJECT	SHEET NO	TOTAL SHEETS
04	SF				

REGISTERED CIVIL ENGINEER

PLANS APPROVAL DATE

REGISTERED PROFESSIONAL ENGINEER — NO. — EXP. — CIVIL — STATE OF CALIFORNIA

The State of California or its officers or agents shall not be responsible for the accuracy or completeness of electronic copies of this plan sheet.

Caltrans now has a web site! To get to the web site, go to: http://www.dot.ca.gov

DATE	REVISED BY	DATE REVISED

CALCULATED/DESIGNED BY

CHECKED BY

DESIGN OVERSIGHT

STATE OF CALIFORNIA - DEPARTMENT OF TRANSPORTATION

Caltrans

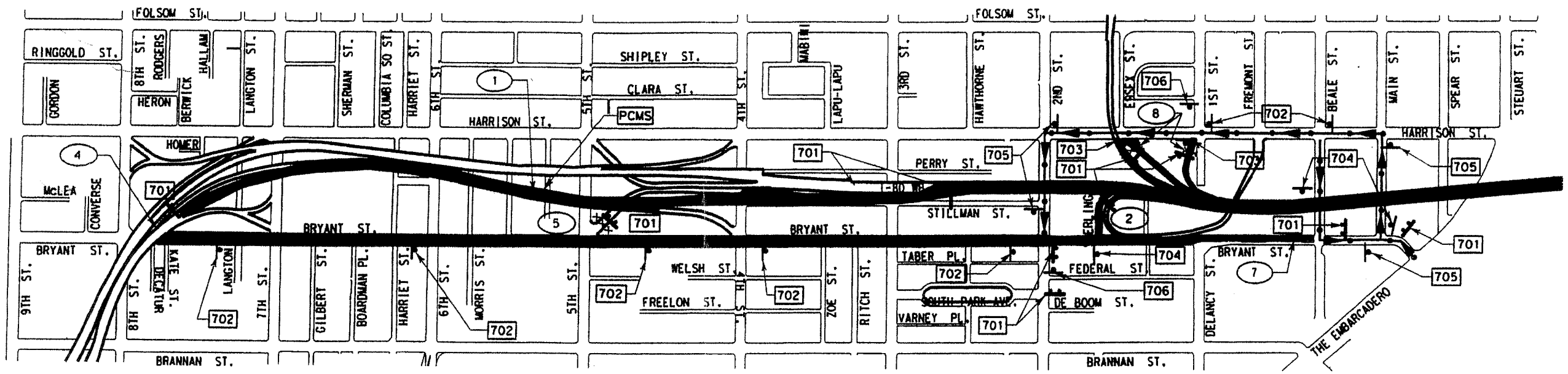

701 *
Special 3000 mm X 2100 mm

EASTBOUND
BAY BRIDGE
WILL BE CLOSED

DATES

TIMES

200 mm D Caps

702
Special 1000 mm x 1200 mm

TREASURE ISLAND
YERBA BUENA IS.
DETOUR ↑

75 mm B Caps
150 mm B Caps

703
Special 1000 mm x 1200 mm

TREASURE ISLAND
YERBA BUENA IS.
DETOUR →

75 mm B Caps
150 mm B Caps

704
Special 1000 mm x 1200 mm

TREASURE ISLAND
YERBA BUENA IS.
DETOUR ←

75 mm B Caps
150 mm B Caps

705
Special 1000 mm x 1200 mm

TREASURE ISLAND
YERBA BUENA IS.
DETOUR ↰

75 mm B Caps
150 mm B Caps

706
Special 1000 mm x 1200 mm

TREASURE ISLAND
YERBA BUENA IS.
DETOUR ↱

75 mm B Caps
150 mm B Caps

CONTRACT NO. 04-012024

CONTRACT CHANGE ORDER NO 76-S1

SHEET 4 OF 13

OAKLAND

SOLID BLACK- CLOSED

OPEN

LAST REVISION 00-00-00 DATE PLOTTED => $DATE TIME PLOTTED => $TIME

40120rm09.dgn 5/31/2007 2:23:36 PM

RELATIVE BORDER SCALE IS IN MILLIMETERS 0 20 40 60 80

DGN FILE => $REQUEST
USERNAME => $USER

CU

EA 0120R4

SHEET 4 OF 9

CCO

DIST	COUNTY	ROUTE	POST MILES TOTAL PROJECT	SHEET NO.	TOTAL SHEETS
04	SF				

REGISTERED CIVIL ENGINEER

REGISTERED PROFESSIONAL ENGINEER — CIVIL — STATE OF CALIFORNIA

The State of California or its officers or agents shall not be responsible for the accuracy or completeness of electronic copies of this plan sheet.

Caltrans now has a web site! To get to the web site, go to: http://www.dot.ca.gov

LEGEND

[#] CMS SIGN NO.

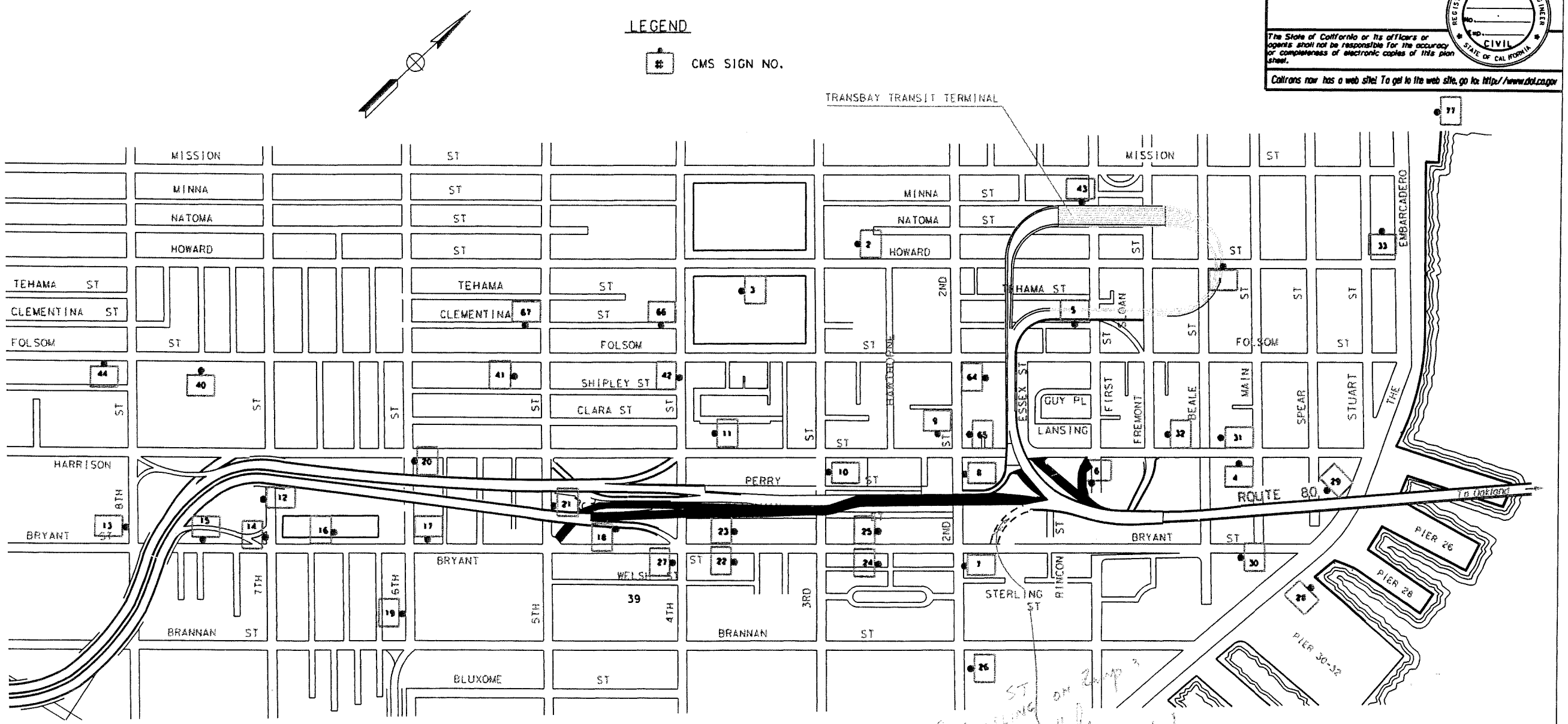

CONTRACT NO. 04-0120R4

CONTRACT CHANGE ORDER NO 76-S1

SHEET 5 OF 13

SOLID BLACK - CLOSED

(STERLING ST on 24th St
This will be
Repl. by I.D. Welch)

REGISTERED PROFESSIONAL ENGINEER — CHEUK HONG WONG — C 50145 — EXP 6/30/08 — CIVIL — STATE OF CALIFORNIA

STATE OF CALIFORNIA - DEPARTMENT OF TRANSPORTATION
Caltrans
TRAFFIC
PROJECT ENGINEER
CHECKED BY
CALCULATED/ DESIGNED BY
DATE REVISED BY
DATE

LAST REVISION
DATE PLOTTED => $DATE
TIME PLOTTED => $TIME

FOR REDUCED PLANS ORIGINAL SCALE IS IN INCHES 0 1 2 3

USERNAME => $USER
DGN FILE => $REQUEST

CU

EA 0120R4

PCMS Location.dgn 7/5/2007 1:03:00 PM

Dist	COUNTY	ROUTE	POST MILES TOTAL PROJECT	SHEET No.	TOTAL SHEET
04	SF				

REGISTERED CIVIL ENGINEER DATE

PLANS APPROVAL DATE

THE STATE OF CALIFORNIA OR ITS OFFICERS OR AGENTS SHALL NOT BE RESPONSIBLE FOR THE ACCURACY OR COMPLETENESS OF ELECTRONIC COPIES OF THIS PLAN SHEET.

REGISTERED PROFESSIONAL ENGINEER No. Exp. CIVIL STATE OF CALIFORNIA

REGISTERED PROFESSIONAL ENGINEER ALEC MELKONIANS C 053452 Exp. 6/30/09 CIVIL STATE OF CALIFORNIA

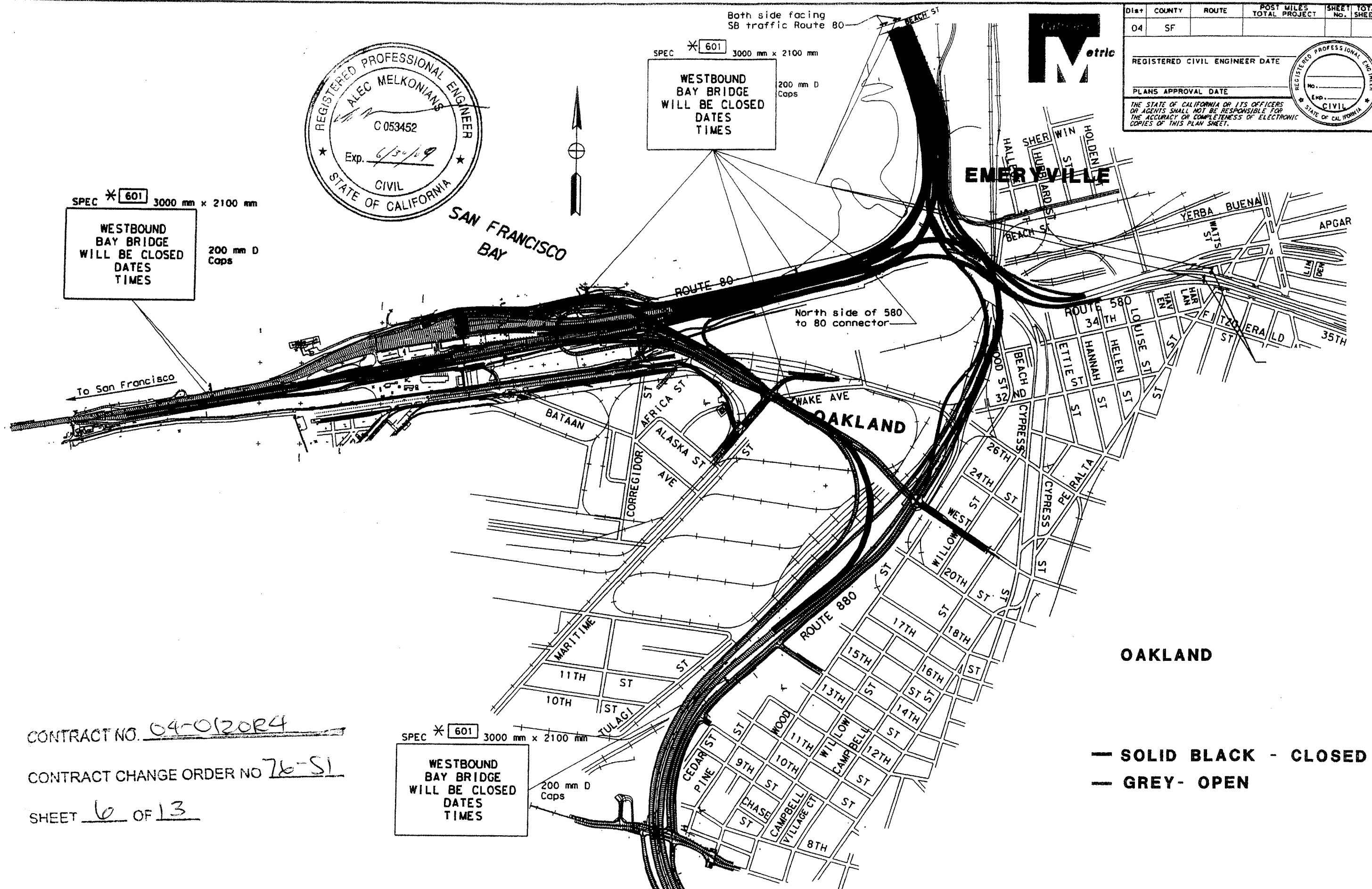

OAKLAND

— SOLID BLACK - CLOSED

— GREY- OPEN

CONTRACT NO. 04-0120R4

CONTRACT CHANGE ORDER NO 76-S1

SHEET 6 OF 13

STATE OF CALIFORNIA - DEPARTMENT OF TRANSPORTATION

Caltrans

FUNCTIONAL SUPERVISOR

CALCULATED-DESIGNED BY

CHECKED BY

REVISED BY

DATE REVISED

40120rm08.dgn 5/31/2007 11:24:17 AM

RELATIVE BORDER SCALE IS IN INCHES 0 1 2 3

USERNAME => $USER
DGN FILE => $REQUEST

EA 0120R4

STATE OF CALIFORNIA
DEPARTMENT OF TRANSPORTATION

DIST	COUNTY	ROUTE	KILOMETER POST TOTAL PROJECT	SHEET NO.	TOTAL SHEETS
04	SF				

SAN FRANCISCO EASTBOUND MAINLINE CLOSURE

REGISTERED PROFESSIONAL ENGINEER
ALEC MELKONIANS
C 053452
Exp. 6/30/09
CIVIL
STATE OF CALIFORNIA

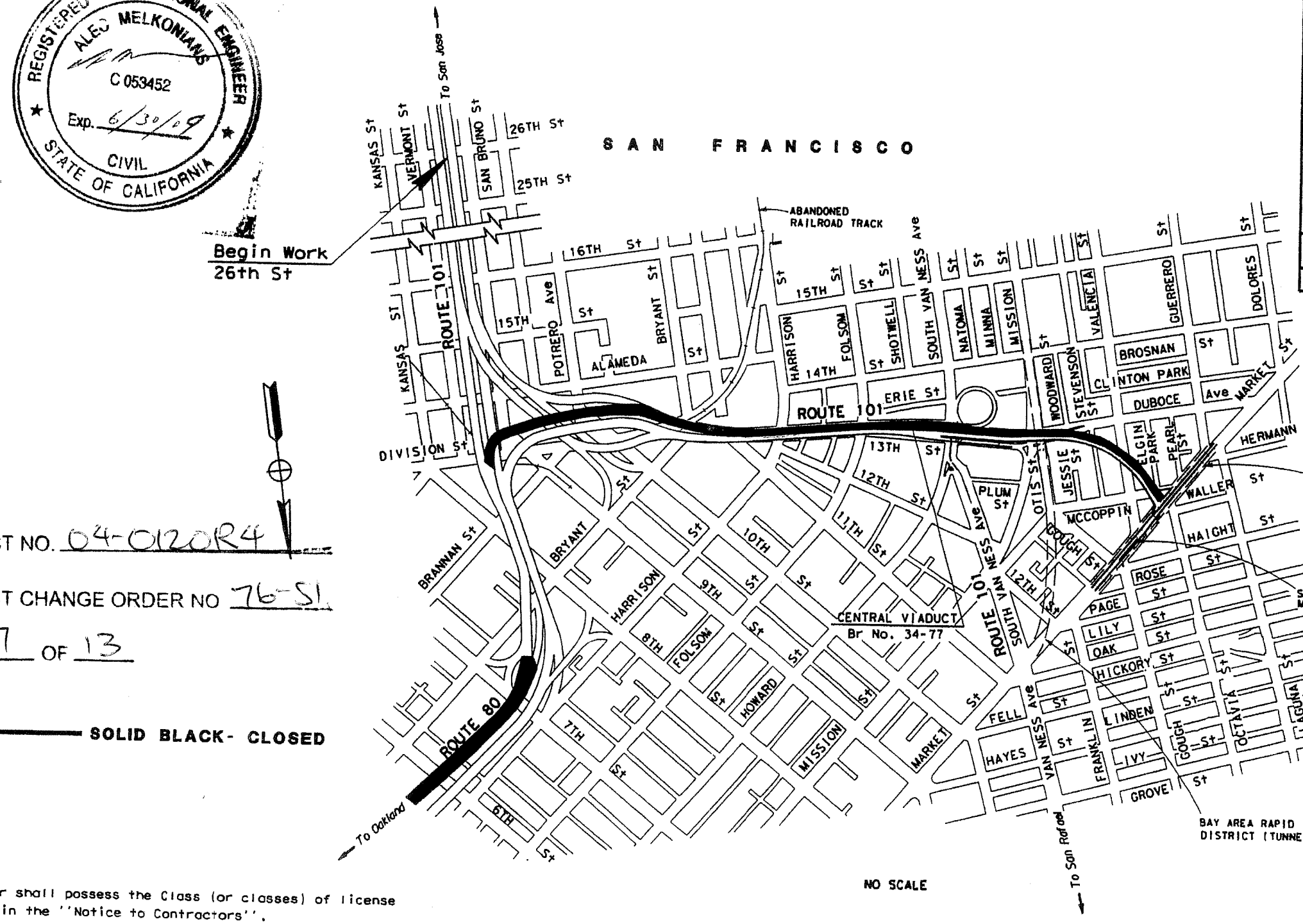

NO SCALE

LOCATION MAP

The State of California or its officers or agents shall not be responsible for the accuracy or completeness of electronic copies of this plan sheet.

Caltrans now has a web site! To get to the web site, go to: http://www.dot.ca.gov

Caltrans Metric

CONTRACT NO. 04-0120R4

CONTRACT CHANGE ORDER NO 76-51

SHEET 7 OF 13

SOLID BLACK- CLOSED

PROJECT ENGINEER	DATE	PROJECT MANAGER	DATE

The Contractor shall possess the Class (or classes) of license as specified in the ''Notice to Contractors''.

Project Engineer Date
Registered Civil Engineer

REGISTERED PROFESSIONAL ENGINEER
NO.
EXP.
CIVIL
STATE OF CALIFORNIA

Plans Approval Date

LAST REVISION | DATE PLOTTED => 30 MAY 2007 | TIME

429100a001.dgn 5/31/2007 2:08:09 PM

FOR REDUCED PLANS ORIGINAL SCALE IS IN MILLIMETERS 0 20 40 60 80

USERNAME => GUSER
DGN FILE => BREQUEST

CU

EA 0120R4

DIST	COUNTY	ROUTE	KILOMETER POST TOTAL PROJECT	SHEET NO	TOTAL SHEETS
04	SF				

SAN FRANCISCO EASTBOUND MAINLINE CLOSURE

REGISTERED PROFESSIONAL ENGINEER
ALEC MELKONIANS
C 053452
Exp. 6/30/09
CIVIL
STATE OF CALIFORNIA

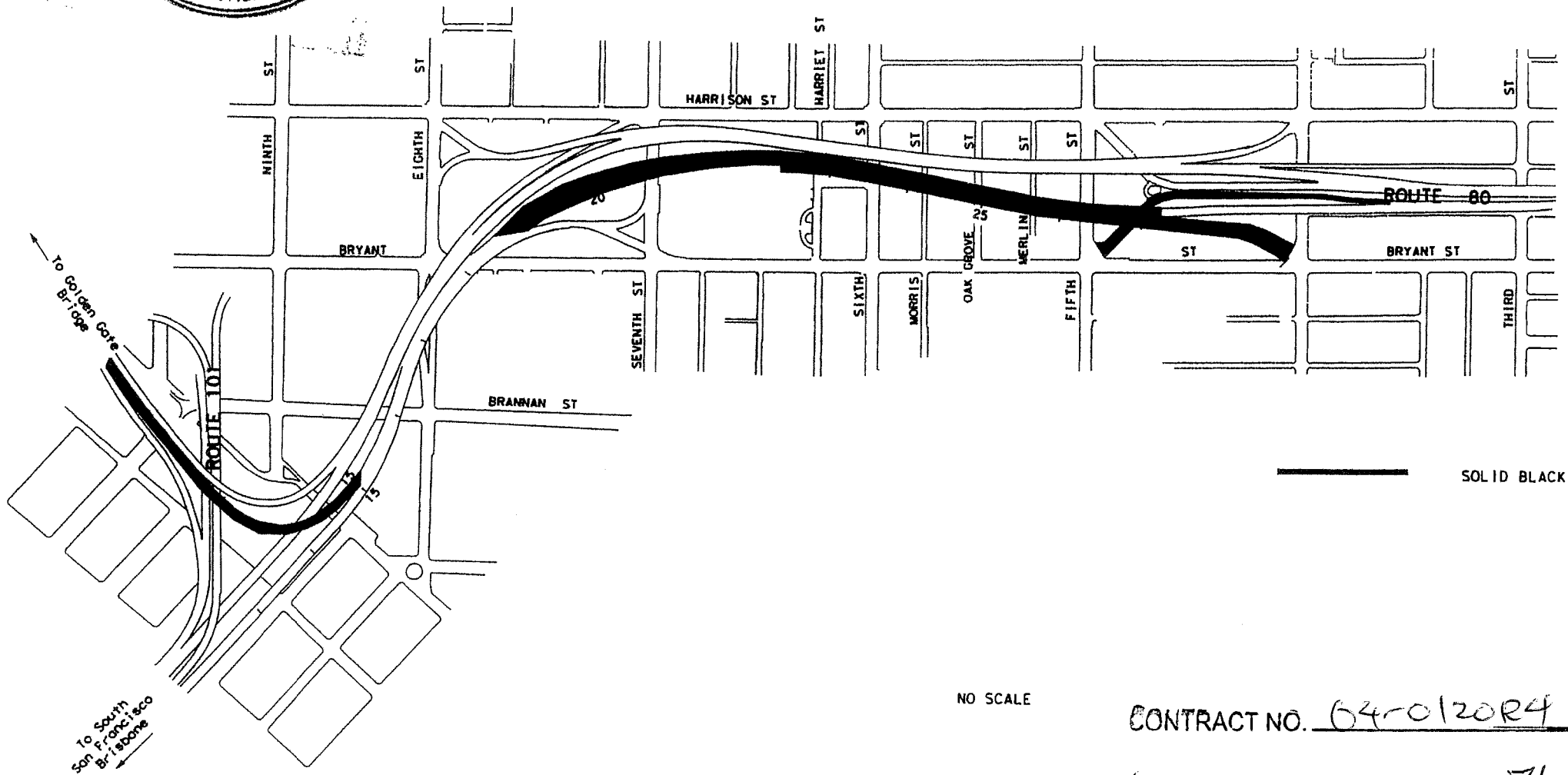

SOLID BLACK - CLOSED

NO SCALE

LOCATION MAP

Caltrans

The State of California or its officers or agents shall not be responsible for the accuracy or completeness of electronic copies of this plan sheet.

Caltrans now has a web site! To get to the web site, go to: http://www.dot.ca.gov

Caltrans Metric

The Contractor shall possess the Class (or Classes) of license as specified in the "Notice to Contractors".

Approved as to Features Affecting City and County of San Francisco Facilities

Project Engineer Date
Registered Civil Engineer

REGISTERED PROFESSIONAL ENGINEER
NO.
EXP.
CIVIL
STATE OF CALIFORNIA

CONTRACT NO. 04-0120R4

CONTRACT CHANGE ORDER NO 76-51

SHEET 8 OF 13

PROJECT ENGINEER | DATE | PROJECT MANAGER | DATE

LAST REVISION | DATE PLOTTED => $DATE | TIME PLOTTED => $TIME

424821.a.dgn 5/31/2007 2:10:26 PM

FOR REDUCED PLANS ORIGINAL SCALE IS IN MILLIMETERS 0 20 40 60 80

USERNAME => $USER
DGN FILE => $REQUEST

CU

EA 0120R4

LABOR DAY WEEKEND
LOCAL PCMS'S

	CMS		FRI, AUGUST 17, 2007 (Turn on Signs before Noon)		MON, AUGUST 27, 2007 (Turn on Signs After 5 AM)		AUG 31st 8:00 PM THRU TUE SEPT 4 (5AM) (Turn on Signs Fri, Aug 31st @ 8:00 PM)	
							FULL EB 80 CLOSED	
			First Panel	Second Panel	First Panel	Second Panel	First Panel	Second Panel
	IP-1	Fremont St @ Howard St Placed on the right side of road. 25 to 100 ft. from the intersection. Facing traffic from the Off-Ramp.			BAY BRIDGE CLOSED	FRI 8 PM THRU TUE 5 AM	BAY BRIDGE CLOSED	DETOUR LEFT AT HOWARD
	IP-2	WB Howard St, between 2nd and 3rd St. Placed on the right side of the road Midblock.					BAY BRDG DETOUR STRAIGHT	LEFT AT 4TH ST
	IP-3	WB Howard St, between 3rd and 4th St. Placed on the Left side of the road. Midblock			BAY BRIDGE CLOSED	FRI 8 PM THRU TUE 5 AM	BAY BRDG DETOUR AHEAD	LEFT AT 4TH ST
	IP-4	SB Main St, between Bryant and Harrison St. Placed on the right hand side of the road.					BAY BRIDGE CLOSED	USE 280S TO 101S TO 92E
#	IP-5	SB 1st St, between Folsom and Howard St. Placed on the right side of road. Midblock	TOW-AWAY ZONE. THIS BOARD MUST BE PUT IN AFTER 7PM ON FRIDAY AND REMOVED BY 5AM SHARP ON TUESDAY SEPT 4.				BAY BRIDGE CLOSED	UNTIL TUESDAY 5 AM
***	IP-6	SB 1st St @ Harrison St Placed near the first street onramp.	BAY BRIDGE CLOSED	LABOR DAY WEEKEND	BAY BRIDGE CLOSED	FRI 8 PM THRU TUE 5 AM	BAY BRIDGE CLOSED	DETOUR RIGHT AT HARRISON
#	IP-7	NB 2nd St, between Brannan and Bryant St. Placed on the right side of the road.	TOW-AWAY ZONE. THIS BOARD MUST BE PUT IN AFTER 7PM ON FRIDAY AND REMOVED BY 5AM SHARP ON TUESDAY SEPT 4.				BAY BRIDGE CLOSED	DETOUR LEFT AT HARRISON
	IP-8	NB 2nd St @ Harrison St Placed on the right side of the road at corner.			BAY BRIDGE CLOSED	FRI 8 PM THRU TUE 5 AM	BAY BRIDGE CLOSED	DETOUR LEFT AT HARRISON
#	IP-9	SB 2nd St, between Folsom and Harrison St. Placed on the right side of the road.	TOW-AWAY ZONE. THIS BOARD MUST BE PUT IN AFTER 7PM ON FRIDAY AND REMOVED BY 5AM SHARP ON TUESDAY SEPT 4.				BAY BRIDGE CLOSED	DETOUR RIGHT AT HARRISON
#	IP-10	NB 3rd St, between Bryant and Harrison St. Placed on the right side.	TOW-AWAY ZONE. THIS BOARD MUST BE PUT IN AFTER 7PM ON FRIDAY AND REMOVED BY 5AM SHARP ON TUESDAY SEPT 4.				BAY BRIDGE CLOSED	DETOUR LEFT AT HARRISON
	IP-11	WB Harrison St, between 3rd & 4th St. Placed on the right side.			BAY BRIDGE CLOSED	FRI 8 PM THRU TUE 5 AM	BAY BRIDGE CLOSED	DETOUR USE 101S TO 92 E
	IP-12	NB 7th St @ south of Harrison St Placed on the right side of 7th St, south of Harrison			BAY BRIDGE CLOSED	FRI 8 PM THRU TUE 5 AM	BAY BRDG DETOUR <--------	DETOUR USE 101S TO 92 E
	IP-13	SB 8th St @ south of Bryant St Placed at left side.			BAY BRIDGE CLOSED	FRI 8 PM THRU TUE 5 AM	BAY BRDG DETOUR <--------	DETOUR USE 101S TO 92 E
***	IP-14	7th St Off-Ramp (i.e. EB 80) Placed at the island for the left lanes. (arrow points to EB 7th St.)	BAY BRIDGE CLOSED	LABOR DAY WEEKEND	BAY BRIDGE CLOSED	FRI 8 PM THRU TUE 5 AM	BAY BRDG DETOUR <----------	DETOUR USE 101S TO 92 E
	IP-15	EB Bryant St, between 7th St. and 8th St. Placed on the left side of the road.					BAY BRIDGE CLOSED	DETOUR LEFT AT 7TH ST
	IP-16	EB Bryant St, between 6th St. and 7th St. Placed on the left side of the road.					BAY BRIDGE CLOSED	DETOUR RIGHT AT 6TH ST
	IP-17	EB Bryant St, between 5th St. and 6th St. Placed on the left side of the road.	BAY BRIDGE CLOSED	LABOR DAY WEEKEND	BAY BRIDGE CLOSED	FRI 8 PM THRU TUE 5 AM	BAY BRIDGE CLOSED	DETOUR LEFT AT 5TH ST
	IP-18	EB Bryant St, between 4th St. and 5th St. Placed on the left side of the road.					BAY BRIDGE CLOSED	DETOUR LEFT AT 3RD ST
#	IP-19	SB 6th St, between Brannan St. and Bryant St. Placed on the right side of the road	TOW-AWAY ZONE. THIS BOARD MUST BE PUT IN AFTER 7PM ON FRIDAY AND REMOVED BY 6AM SHARP ON TUESDAY SEPT 4.				BAY BRIDGE CLOSED	USE 280S TO 101S TO 92E
#	IP-20	NB 6th St, between Bryant St. and Harrison St. Placed on the right side of the road.	TOW-AWAY ZONE. THIS BOARD MUST BE PUT IN AFTER 7PM ON FRIDAY AND REMOVED BY 6AM SHARP ON TUESDAY SEPT 4.				BAY BRDG DETOUR <--------	DETOUR USE 101S TO 92 E
	IP-21	NB 5th St, between Bryant St. and Harrison St. Placed on the right side of the road.					BAY BRDG DETOUR <--------	DETOUR USE 101S TO 92 E
	IP-23	EB Bryant St, between 3rd St. and 4th St. Placed on the left side of the road.					BAY BRIDGE CLOSED	DETOUR LEFT AT 3RD ST
	IP-25	EB Bryant St, between 2nd and 3th St. Placed on the left side of the road.					BAY BRIDGE CLOSED	DETOUR LEFT AT 2ND ST
	IP-26	NB 2nd St, between Brannan and Townsend St. Placed on the right side of the road.			BAY BRIDGE CLOSED	FRI 8 PM THRU TUE 5 AM	BAY BRDG DETOUR <--------	USE 280S TO 101S TO 92E
***	IP-27	On Bryant St. @ 4th St. on the SE Corner Across from the Gas Station. Facing the off-ramp traffic.	BAY BRIDGE CLOSED	LABOR DAY WEEKEND	BAY BRIDGE CLOSED	FRI 8 PM THRU TUE 5 AM	BAY BRIDGE CLOSED	DETOUR STRAIGHT
	IP-28	NB Embarcadero @ Bryant St Placed on the right side of the road.			BAY BRIDGE CLOSED	FRI 8 PM THRU TUE 5 AM	BAY BRIDGE CLOSED	DETOUR LEFT AT HOWARD
	IP-29	SB Embarcadero @ Bryant St Placed on the right side of the road.			BAY BRIDGE CLOSED	FRI 8 PM THRU TUE 5 AM	BAY BRIDGE CLOSED	DETOUR RIGHT AT KING
	IP-31	SB Beale St., between Folsom St. and Bryant St. Place on the right side, about 150 north of Bryant St.	BAY BRIDGE CLOSED	LABOR DAY WEEKEND	BAY BRIDGE CLOSED	FRI 8 PM THRU TUE 5 AM	BAY BRDG DETOUR <--------	RIGHT AT EMBARCA-DERO
	IP-32	WB Harrison St between Main St and Fremont Placed midblock on the right side.	BAY BRIDGE CLOSED	LABOR DAY WEEKEND	BAY BRIDGE CLOSED	FRI 8 PM THRU TUE 5 AM	BAY BRDG DETOUR STRAIGHT	DETOUR USE 101S TO 92 E
***	IP-34	SB South Van Ness Ave and 13th St Placed on the left side of the approach lane in the gore area.	BAY BRIDGE CLOSED	LABOR DAY WEEKEND	BAY BRIDGE CLOSED	FRI 8 PM THRU TUE 5 AM	BAY BRIDGE CLOSED	DETOUR USE 101S TO 92 E
***	IP-35	EB Oak St, between Laguna and Octavia St. Placed on the right side at the approach on the s/w.(100 feet south of Octavia)	BAY BRIDGE CLOSED	LABOR DAY WEEKEND	BAY BRIDGE CLOSED	FRI 8 PM THRU TUE 5 AM	BAY BRIDGE CLOSED	DETOUR USE 101S TO 92 E
***	IP-36	NB Hospital Curve (Hwy 101) Placed on the right shoulder before Vermont St Off-Ramp.	BAY BRIDGE CLOSED	LABOR DAY WEEKEND	BAY BRIDGE CLOSED	FRI 8 PM THRU TUE 5 AM	BAY BRIDGE CLOSED	DETOUR USE 101S TO 92 E
***	IP-37	WB 80 (Near Yerba Buena Island) East side of the tunnel. Placed at the YBI Off-Ramp / gore area	BAY BRIDGE CLOSED	LABOR DAY WEEKEND	BAY BRIDGE CLOSED	FRI 8 PM THRU TUE 5 AM		
#	IP-38	EB Bush St, west of Battery St Placed on the left side of Bush St. About 100 ft before Battery St.	TOW-AWAY ZONE. THIS BOARD MUST BE PUT IN AFTER 7PM ON FRIDAY AND REMOVED BY 5AM SHARP ON TUESDAY SEPT 4.				BAY BRIDGE CLOSED	DETOUR USE 101S TO 92 E
#	IP-39	SB Battery St, north of Bush St Placed on Battery on right side of street	TOW-AWAY ZONE. THIS BOARD MUST BE PUT IN AFTER 7PM ON FRIDAY AND REMOVED BY 5AM SHARP ON TUESDAY SEPT 4.				BAY BRIDGE CLOSED	DETOUR USE 101S TO 92 E
	IP-40	EB Folsom St, between 7th St and 8th St. Placed on right side of road.					BAY BRIDGE CLOSED	DETOUR RIGHT AT 7TH ST
	IP-41	EB Folsom between 5th St and 6th St. Placed on right side of road.					BAY BRIDGE CLOSED	DETOUR RIGHT AT 4TH ST
	IP-42	EB Folsom St, between 4th St and 5th St. Placed on right side of road.	BAY BRIDGE CLOSED	LABOR DAY WEEKEND	BAY BRIDGE CLOSED	FRI 8 PM THRU TUE 5 AM	BAY BRIDGE CLOSED	DETOUR RIGHT AT 4TH ST
	IP-43	SB 1st St, between Mission and Howard St. Placed on left side of road.	BAY BRIDGE CLOSED	LABOR DAY WEEKEND	BAY BRIDGE CLOSED	FRI 8 PM THRU TUE 5 AM	BAY BRIDGE CLOSED	DETOUR RIGHT AT HOWARD
***	IP-44	EB Folsom St, btwn 8th St. and 9th St. Placed on right side of road.	BAY BRIDGE CLOSED	LABOR DAY WEEKEND	BAY BRIDGE CLOSED	FRI 8 PM THRU TUE 5 AM	BAY BRIDGE CLOSED	DETOUR RIGHT AT 7TH ST
#	IP-45	EB Bush St, west of Hyde St Placed on the right side of road.	THIS BOARD TO BE REMOVED FROM ITS LOCATION AT 5:00 AM SHARP ON TUESDAY SEPT 4, TO ALLOW FOR A SMOOTH MORNING COMMUTE				BAY BRIDGE CLOSED	UNTIL TUESDAY 5 AM
	IP-46	SB Octavia Blvd @ Market St (small CMS) Place on the right side near the plaza. Do not block bike lane.	BAY BRIDGE CLOSED	LABOR DAY WEEKEND	BAY BRIDGE CLOSED	FRI 8 PM THRU TUE 5 AM	BAY BRIDGE CLOSED	UNTIL TUESDAY 5 AM

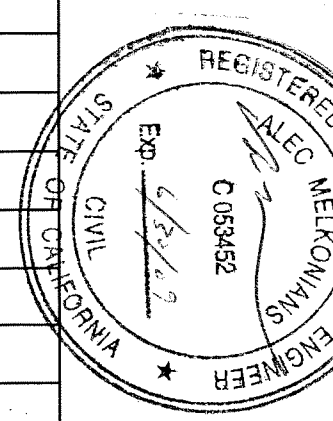

CONTRACT NO. 04-0120R4

CONTRACT CHANGE ORDER NO 16-51

SHEET 9 OF 13

LABOR DAY WEEKEND
LOCAL PCMS'S

	CMS		FRI, AUGUST 17, 2007 (Turn on Signs before Noon)		MON, AUGUST 27, 2007 (Turn on Signs After 5 AM)		AUG 31st 8:00 PM THRU TUE SEPT 4 (5AM) (Turn on Signs Fri, Aug 31st @ 8:00 PM) FULL EB 80 CLOSED	
			First Panel	Second Panel	First Panel	Second Panel	First Panel	Second Panel
	IP-49	NB Junipero Serra Blvd, before Ocean Ave (small CMS) Place on the right side.	BAY BRIDGE CLOSED	LABOR DAY WEEKEND	BAY BRIDGE CLOSED	FRI 8 PM THRU TUE 5 AM	BAY BRIDGE CLOSED	UNTIL TUESDAY 5 AM
	IP-50	NB 3rd St, after Evans St Place on the right side.	BAY BRIDGE CLOSED	LABOR DAY WEEKEND	BAY BRIDGE CLOSED	FRI 8 PM THRU TUE 5 AM	BAY BRIDGE CLOSED	UNTIL TUESDAY 5 AM
	IP-51	NB Alemany Blvd, after Geneva Ave Place on the right side.	BAY BRIDGE CLOSED	LABOR DAY WEEKEND	BAY BRIDGE CLOSED	FRI 8 PM THRU TUE 5 AM	BAY BRIDGE CLOSED	UNTIL TUESDAY 5 AM
	IP-52	WB Geneva Ave, before San Jose Ave Place on the right side.	BAY BRIDGE CLOSED	LABOR DAY WEEKEND	BAY BRIDGE CLOSED	FRI 8 PM THRU TUE 5 AM	BAY BRIDGE CLOSED	UNTIL TUESDAY 5 AM
	IP-53	EB Oak St, before Masonic Ave	BAY BRIDGE CLOSED	LABOR DAY WEEKEND	BAY BRIDGE CLOSED	FRI 8 PM THRU TUE 5 AM	BAY BRIDGE CLOSED	UNTIL TUESDAY 5 AM
	IP-54	NB 19th Ave, after Lincoln Way (small CMS) Place in the grass area on the right side. Please make sure it is not blocked by the column.	BAY BRIDGE CLOSED	LABOR DAY WEEKEND	BAY BRIDGE CLOSED	FRI 8 PM THRU TUE 5 AM	BAY BRIDGE CLOSED	UNTIL TUESDAY 5 AM
	IP- 56	NB Embarcadero @ Bay St Place on the right side.	BAY BRIDGE CLOSED	LABOR DAY WEEKEND	BAY BRIDGE CLOSED	FRI 8 PM THRU TUE 5 AM	BAY BRIDGE CLOSED	UNTIL TUESDAY 5 AM
	IP-57	SB Van Ness Ave, south of Union St. Place on the right side.	BAY BRIDGE CLOSED	LABOR DAY WEEKEND	BAY BRIDGE CLOSED	FRI 8 PM THRU TUE 5 AM	BAY BRIDGE CLOSED	UNTIL TUESDAY 5 AM
	IP-58	280/101S gore point	BAY BRIDGE CLOSED	LABOR DAY WEEKEND	BAY BRIDGE CLOSED	FRI 8 PM THRU TUE 5 AM	BAY BRIDGE CLOSED	UNTIL TUESDAY 5 AM
	IP-59	NB 280 before Geneva Ave	BAY BRIDGE CLOSED	LABOR DAY WEEKEND	BAY BRIDGE CLOSED	FRI 8 PM THRU TUE 5 AM	BAY BRIDGE CLOSED	UNTIL TUESDAY 5 AM
	IP-60	NB 280 before 101 split	BAY BRIDGE CLOSED	LABOR DAY WEEKEND	BAY BRIDGE CLOSED	FRI 8 PM THRU TUE 5 AM	BAY BRIDGE CLOSED	UNTIL TUESDAY 5 AM
	IP-61	NB 280 before Mariposa St	BAY BRIDGE CLOSED	LABOR DAY WEEKEND	BAY BRIDGE CLOSED	FRI 8 PM THRU TUE 5 AM	BAY BRIDGE CLOSED	UNTIL TUESDAY 5 AM
	IP-62	Mission St before Ceasar Chavez St. Place on the right side.	BAY BRIDGE CLOSED	LABOR DAY WEEKEND	BAY BRIDGE CLOSED	FRI 8 PM THRU TUE 5 AM	BAY BRIDGE CLOSED	UNTIL TUESDAY 5 AM
	IP-63	NB Bayshore Blvd, North of Sunnydale Ave. Place on the right side.	BAY BRIDGE CLOSED	LABOR DAY WEEKEND	BAY BRIDGE CLOSED	FRI 8 PM THRU TUE 5 AM	BAY BRIDGE CLOSED	UNTIL TUESDAY 5 AM
	IP-64	EB Folsom St at 2nd St. Place on the right side.	BAY BRIDGE CLOSED	LABOR DAY WEEKEND	BAY BRIDGE CLOSED	FRI 8 PM THRU TUE 5 AM	BAY BRIDGE CLOSED	DETOUR RIGHT AT 2ND ST
	IP-65	WB Harrison St., btwn Bus off-ramp and 2nd St. Place on the right side.					BAY BRIDGE CLOSED	DETOUR STRAIGHT
	IP-67	SB 5th St., between Howard St. and Folsom St. Place on the right side.	BAY BRIDGE CLOSED	LABOR DAY WEEKEND	BAY BRIDGE CLOSED	FRI 8 PM THRU TUE 5 AM	BAY BRIDGE CLOSED	DETOUR RIGHT AT HARRISON
	IP-68	SB South Van Ness, after Market St. Place on the right side near the Honda Dealership, but away from their driveways.	BAY BRIDGE CLOSED	LABOR DAY WEEKEND	BAY BRIDGE CLOSED	FRI 8 PM THRU TUE 5 AM	BAY BRIDGE CLOSED	DETOUR USE 101S TO 92E
	IP-69	EB Geary St. at Van Ness Ave. Place on the right side.	BAY BRIDGE CLOSED	LABOR DAY WEEKEND	BAY BRIDGE CLOSED	FRI 8 PM THRU TUE 5 AM	BAY BRIDGE CLOSED	UNTIL TUESDAY 5 AM
	IP-71	SB Van Ness Ave. at California St. Place on the right side.	BAY BRIDGE CLOSED	LABOR DAY WEEKEND	BAY BRIDGE CLOSED	FRI 8 PM THRU TUE 5 AM	BAY BRIDGE CLOSED	UNTIL TUESDAY 5 AM
	IP-72	NB Van Ness Ave., at Lombard St. Place on the right side.	BAY BRIDGE CLOSED	LABOR DAY WEEKEND	BAY BRIDGE CLOSED	FRI 8 PM THRU TUE 5 AM	BAY BRIDGE CLOSED	UNTIL TUESDAY 5 AM
	IP-73	WB Lombard St. at Divisadero	BAY BRIDGE CLOSED	LABOR DAY WEEKEND	BAY BRIDGE CLOSED	FRI 8 PM THRU TUE 5 AM	BAY BRIDGE CLOSED	UNTIL TUESDAY 5 AM
	IP-74	NB 19th Ave at Sloat Blvd. Place on the right side after Sloat Blvd, outside of bus zone.	BAY BRIDGE CLOSED	LABOR DAY WEEKEND	BAY BRIDGE CLOSED	FRI 8 PM THRU TUE 5 AM	BAY BRIDGE CLOSED	UNTIL TUESDAY 5 AM
	IP-75	NB Park Presidio Blvd at Geary Blvd. Place on the right side.	BAY BRIDGE CLOSED	LABOR DAY WEEKEND	BAY BRIDGE CLOSED	FRI 8 PM THRU TUE 5 AM	BAY BRIDGE CLOSED	UNTIL TUESDAY 5 AM
	IP-77	SB Embarcadero at the Ferry Building. Place on the right side.	BAY BRIDGE CLOSED	LABOR DAY WEEKEND	BAY BRIDGE CLOSED	FRI 8 PM THRU TUE 5 AM	BAY BRIDGE CLOSED	UNTIL TUESDAY 5 AM
	IP-78	EB Broadway between Davis St. and Embarcadero Place on the right side, before the keep clear approaching Embarcadero	BAY BRIDGE CLOSED	LABOR DAY WEEKEND	BAY BRIDGE CLOSED	FRI 8 PM THRU TUE 5 AM	BAY BRIDGE CLOSED	UNTIL TUESDAY 5 AM
		OAKLAND						
	IP-82	Webster Street (Posey Tube) in Alameda	BAY BRIDGE CLOSED	LABOR DAY WEEKEND	BAY BRIDGE CLOSED	FRI 8 PM THRU TUE 5 AM	BAY BRIDGE CLOSED	UNTIL TUESDAY 5 AM
		#Go in Friday Night *** = Turn on twoo weeks prior to Bay Bridge closure						
	DPT CMS 1	SB Embarcadero, between Howard St. and Mission St. on the west side	BAY BRIDGE CLOSED	LABOR DAY WEEKEND	BAY BRIDGE CLOSED	FRI 8 PM THRU TUE 5 AM	BAY BRIDGE CLOSED	DETOUR RIGHT AT HOWARD
	DPT CMS 2	EB King St., between Embarcadero and 2nd St. on the north side	BAY BRIDGE CLOSED	LABOR DAY WEEKEND	BAY BRIDGE CLOSED	FRI 8 PM THRU TUE 5 AM	BAY BRIDGE CLOSED	UNTIL TUESDAY 5 AM
	DPT CMS 3	NB 9th St., between Folsom St. and Howard St. on the east side	BAY BRIDGE CLOSED	LABOR DAY WEEKEND	BAY BRIDGE CLOSED	FRI 8 PM THRU TUE 5 AM	BAY BRIDGE CLOSED	UNTIL TUESDAY 5 AM
	DPT CMS 4	SB 10th St., between Folsom St. and Howard St.	BAY BRIDGE CLOSED	LABOR DAY WEEKEND	BAY BRIDGE CLOSED	FRI 8 PM THRU TUE 5 AM	BAY BRIDGE CLOSED	DETOUR USE 101S TO 92E
	DPT CMS 5	WB King St., between 2nd St. and 3rd St. on the north side	BAY BRIDGE CLOSED	LABOR DAY WEEKEND	BAY BRIDGE CLOSED	FRI 8 PM THRU TUE 5 AM	BAY BRIDGE CLOSED	UNTIL TUESDAY 5 AM
	DPT CMS 6	WB King St., between 3rd St. and 4th St. on the north side	BAY BRIDGE CLOSED	LABOR DAY WEEKEND	BAY BRIDGE CLOSED	FRI 8 PM THRU TUE 5 AM	BAY BRIDGE DETOUR	USE 280S TO 101S TO 92E
	DPT CMS 7	NB 3rd St. (bridge) north of Terry A. Francois Blvd.	BAY BRIDGE CLOSED	LABOR DAY WEEKEND	BAY BRIDGE CLOSED	FRI 8 PM THRU TUE 5 AM	BAY BRIDGE CLOSED	DETOUR LEFT AT KING ST.
	DPT CMS 8	SB 3rd St. (bridge) south of Berry St. (currently not working)						
	DPT/ Caltrans CMS 9	SB 4th St., between Folsom St. and Howard St. on the west side south of Clementina	BAY BRIDGE CLOSED	LABOR DAY WEEKEND	BAY BRIDGE CLOSED	FRI 8 PM THRU TUE 5 AM	BAY BRIDGE CLOSED	DETOUR USE 101S TO 92 E
	DPT/ Caltrans CMS 10	EB Bryant St., between 2nd St. and 3rd St. on the south side.	BAY BRIDGE CLOSED	LABOR DAY WEEKEND	BAY BRIDGE CLOSED	FRI 8 PM THRU TUE 5 AM	BAY BRIDGE CLOSED	UNTIL TUESDAY 5 AM

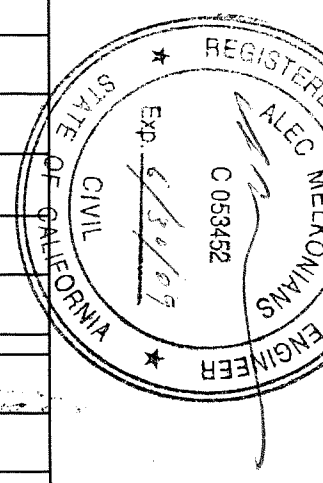

CONTRACT NO. 04-0120R4
CONTRACT CHANGE ORDER NO 76 SL
SHEET 10 OF 13

SFOBB SSD PROJECT (EB)
LABOR DAY WEEKEND IP ADRESSABLE PCMS'S

No	Cnty	Fwy Dir	Rte	PM	PCMS Location	17-Aug-07 (Turn on Signs before Noon)		27-Aug-07 (Turn on Signs after 5 AM)		FRI AUG 31 @8:00 PM THRU TUE SEPT 4(5 AM) Turn on Signs.	
						First Panel	Second panel	First Panel	Second Panel	First Panel	Second Panel
IP-83	SOL	WB	80	0.4	WB Route 80 AT Cordelia junction	BAY BRIDGE CLOSED	LABOR DAY WEEKEND	BAY BRIDGE CLOSED	FRI 8 P.M THRU TUE 5 AM	BAY BRIDGE CLOSED	UNTIL TUESDAY 5:00 AM
IP-84	SOL	WB	80	8.6	WB Route 80 EAST of American Canyon Rd	BAY BRIDGE CLOSED	LABOR DAY WEEKEND	BAY BRIDGE CLOSED	FRI 8 P.M THRU TUE 5 AM	BAY BRIDGE CLOSED	UNTIL TUESDAY 5:00 AM
IP-85	SOL	WB	80	0.7	WB Route 80 At EAST of Carquinez Bridge	BAY BRIDGE CLOSED	LABOR DAY WEEKEND	BAY BRIDGE CLOSED	FRI 8 P.M THRU TUE 5 AM	BAY BRIDGE CLOSED	UNTIL TUESDAY 5:00 AM
IP-86	CC	WB	80		WB Route 80 East of Richmond Parkway	BAY BRIDGE CLOSED	LABOR DAY WEEKEND	BAY BRIDGE CLOSED	FRI 8 P.M THRU TUE 5 AM	BAY BRIDGE CLOSED	UNTIL TUESDAY 5:00 AM
IP-87	CC	WB	80	2.7	Prior to Barrett offRamp	BAY BRIDGE CLOSED	LABOR DAY WEEKEND	BAY BRIDGE CLOSED	FRI 8 P.M THRU TUE 5 AM	BAY BRIDGE CLOSED	UNTIL TUESDAY 5:00 AM
IP-88	CC	WB	24	2.4	WB Route 24 East of Camino Pablo	BAY BRIDGE CLOSED	LABOR DAY WEEKEND	BAY BRIDGE CLOSED	FRI 8 P.M THRU TUE 5 AM	BAY BRIDGE CLOSED	UNTIL TUESDAY 5:00 AM
IP-89	AL	WB	580	2.9	WB Route 580 West of WB Route 80	BAY BRIDGE CLOSED	LABOR DAY WEEKEND	BAY BRIDGE CLOSED	FRI 8 P.M THRU TUE 5 AM	BAY BRIDGE CLOSED	UNTIL TUESDAY 5:00 AM
IP-90	AL	WB	580		WB Route 580 AT Castro Valley "Y"	BAY BRIDGE CLOSED	LABOR DAY WEEKEND	BAY BRIDGE CLOSED	FRI 8 P.M THRU TUE 5 AM	BAY BRIDGE CLOSED	UNTIL TUESDAY 5:00 AM
IP-91	AL	NB	880		NB Route 880 South of Route 92	BAY BRIDGE CLOSED	LABOR DAY WEEKEND	BAY BRIDGE CLOSED	FRI 8 P.M THRU TUE 5 AM	BAY BRIDGE CLOSED	UNTIL TUESDAY 5:00 AM
IP-92	AL	WB	80	7.5	WB Route 80 AT EB Route 580 Split	BAY BRIDGE CLOSED	LABOR DAY WEEKEND	BAY BRIDGE CLOSED	FRI 8 P.M THRU TUE 5 AM	BAY BRIDGE CLOSED	UNTIL TUESDAY 5:00 AM
IP-93	AL	WB	80	7.6	WB Route 580 EB Route 80 Split	BAY BRIDGE CLOSED	LABOR DAY WEEKEND	BAY BRIDGE CLOSED	FRI 8 P.M THRU TUE 5 AM	BAY BRIDGE CLOSED	UNTIL TUESDAY 5:00 AM
IP-94	AL	WB	24	3.1	WB Route 24 East of Telegraph Ave.	BAY BRIDGE CLOSED	LABOR DAY WEEKEND	BAY BRIDGE CLOSED	FRI 8 P.M THRU TUE 5 AM	BAY BRIDGE CLOSED	UNTIL TUESDAY 5:00 AM
IP-95	AL	NB	880	31.1	NB Route 880 South of Oak St South of 5th	BAY BRIDGE CLOSED	LABOR DAY WEEKEND	BAY BRIDGE CLOSED	FRI 8 P.M THRU TUE 5 AM	BAY BRIDGE CLOSED	UNTIL TUESDAY 5:00 AM
IP-96	AL	EB	980	0.8	EB Route 980 South of 14th St	BAY BRIDGE CLOSED	LABOR DAY WEEKEND	BAY BRIDGE CLOSED	FRI 8 P.M THRU TUE 5 AM	BAY BRIDGE CLOSED	UNTIL TUESDAY 5:00 AM
IP-97	AL	WB	580		WB Route 580 AT Grand Ave Viaduct	BAY BRIDGE CLOSED	LABOR DAY WEEKEND	BAY BRIDGE CLOSED	FRI 8 P.M THRU TUE 5 AM	BAY BRIDGE CLOSED	UNTIL TUESDAY 5:00 AM
IP-98	CC	WB	4		WB Route 4 East Of Route 242	BAY BRIDGE CLOSED	LABOR DAY WEEKEND	BAY BRIDGE CLOSED	FRI 8 P.M THRU TUE 5 AM	BAY BRIDGE CLOSED	UNTIL TUESDAY 5:00 AM
IP-99	AL	NB	880	10.4	NB 880 South of Route 84	BAY BRIDGE CLOSED	LABOR DAY WEEKEND	BAY BRIDGE CLOSED	FRI 8 P.M THRU TUE 5 AM	BAY BRIDGE CLOSED	UNTIL TUESDAY 5:00 AM
IP-100	CC	SB	680		does not look right SB Route 680 prior to Route 580 I/C	BAY BRIDGE CLOSED	LABOR DAY WEEKEND	BAY BRIDGE CLOSED	FRI 8 P.M THRU TUE 5 AM	BAY BRIDGE CLOSED	UNTIL TUESDAY 5:00 AM
IP-101	AL	WB	580	R020.1	WB 580 Prior to Route 680 I/C	BAY BRIDGE CLOSED	LABOR DAY WEEKEND	BAY BRIDGE CLOSED	FRI 8 P.M THRU TUE 5 AM	BAY BRIDGE CLOSED	UNTIL TUESDAY 5:00 AM
IP-102	AL	SB	880	6.4	SB Route 880 prior to Route 92 I/C	BAY BRIDGE CLOSED	LABOR DAY WEEKEND	BAY BRIDGE CLOSED	FRI 8 P.M THRU TUE 5 AM	BAY BRIDGE CLOSED	UNTIL TUESDAY 5:00 AM
IP-103	AL	NB	880	0.1	NB Route 880 Prior to Route 237	BAY BRIDGE CLOSED	LABOR DAY WEEKEND	BAY BRIDGE CLOSED	FRI 8 P.M THRU TUE 5 AM	BAY BRIDGE CLOSED	UNTIL TUESDAY 5:00 AM
IP-104	AL	WB	80	0.1	WB Route 80 At Powell St	BAY BRIDGE CLOSED	LABOR DAY WEEKEND	BAY BRIDGE CLOSED	FRI 8 P.M THRU TUE 5 AM	BAY BRIDGE CLOSED	UNTIL TUESDAY 5:00 AM
IP-105	AL	WB	80	0.1	WB Route 80 At Powell St ON-RAMP	BAY BRIDGE CLOSED	LABOR DAY WEEKEND	BAY BRIDGE CLOSED	FRI 8 P.M THRU TUE 5 AM	BAY BRIDGE CLOSED	UNTIL TUESDAY 5:00 AM
IP-106	AL	WB	580		WB Route 580 before 24/980 Off Ramp (to South 880)	BAY BRIDGE CLOSED	LABOR DAY WEEKEND	BAY BRIDGE CLOSED	FRI 8 P.M THRU TUE 5 AM	BAY BRIDGE CLOSED	UNTIL TUESDAY 5:00 AM
IP-107	AL	WB	24/980		At 12 th Street, WB before HWY 24/980	BAY BRIDGE CLOSED	LABOR DAY WEEKEND	BAY BRIDGE CLOSED	FRI 8 P.M THRU TUE 5 AM	BAY BRIDGE CLOSED	UNTIL TUESDAY 5:00 AM
										BAY	UNTIL
IP-109	AL	WB	880		On High Street WB at HWY 880	BAY BRIDGE CLOSED	LABOR DAY WEEKEND	BAY BRIDGE CLOSED	FRI 8 P.M THRU TUE 5 AM	BAY BRIDGE CLOSED	UNTIL TUESDAY 5:00 AM
IP-110	AL	WB			At Airport Drive EB from Oakland International Airport	BAY BRIDGE CLOSED	LABOR DAY WEEKEND	BAY BRIDGE CLOSED	FRI 8 P.M THRU TUE 5 AM	BAY BRIDGE CLOSED	UNTIL TUESDAY 5:00 AM

CONTRACT NO. 04-012024
CONTRACT CHANGE ORDER NO 76-S1
SHEET 11 OF 13

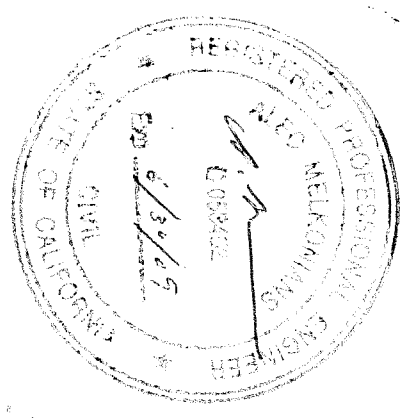

SFOBB SSD PROJECT (WB)
LABOR DAY WEEKEND IP ADRESSABLE PCMS'S

	No	Cnty	Fwy	Rte	PM	PCMS Location	17-Aug-07 (Turn on Signs before Noon)		27-Aug-07 (Turn on Signs after 5:00AM)		FRI AUG 31 @ 8:00PM THRU TUE SEPT 4(5 AM) Turn on Sings	
							First Panel	Second panel	First Panel	Second Panel	First Panel	Second Panel
	IP-111	MRN	SB	101	10.2	N of 101/580 JCT	BAY BRIDGE CLOSED	LABOR DAY WEEKEND	BAY BRIDGE CLOSED	FRI 8 P.M THRU TUE 5 AM	BAY BRIDGE CLOSED	UNTIL TUESDAY 5:00 AM
	IP-112	MRN	SB	101	5.4	S of Tiburon Blvd/ E Blitherdate Ave	BAY BRIDGE CLOSED	LABOR DAY WEEKEND	BAY BRIDGE CLOSED	FRI 8 P.M THRU TUE 5 AM	BAY BRIDGE CLOSED	UNTIL TUESDAY 5:00 AM
	IP-113	ALA				OAKLAND Airport	BAY BRIDGE CLOSED	LABOR DAY WEEKEND	BAY BRIDGE CLOSED	FRI 8 P.M THRU TUE 5 AM	BAY BRIDGE CLOSED	UNTIL TUESDAY 5:00 AM
	IP-114	MRN	SB	101	3.1	North of Sausalito Lateral Rd	BAY BRIDGE CLOSED	LABOR DAY WEEKEND	BAY BRIDGE CLOSED	FRI 8 P.M THRU TUE 5 AM	BAY BRIDGE CLOSED	UNTIL TUESDAY 5:00 AM
	IP-115	SM	NB	1	47.3	N of Clarinada Ave	BAY BRIDGE CLOSED	LABOR DAY WEEKEND	BAY BRIDGE CLOSED	FRI 8 P.M THRU TUE 5 AM	BAY BRIDGE CLOSED	UNTIL TUESDAY 5:00 AM
	IP-116	SM	NB	280	25.2	N of Serramonte Blvd	WB BAY BRIDGE CLOSED	LABOR DAY WEEKEND	BAY BRIDGE CLOSED	FRI 8 P.M THRU TUE 5 AM	BAY BRIDGE CLOSED	UNTIL TUESDAY 5:00 AM
	IP-117	SM	EB	380	5	W of 380/280 JCT	BAY BRIDGE CLOSED	LABOR DAY WEEKEND	BAY BRIDGE CLOSED	FRI 8 P.M THRU TUE 5 AM	BAY BRIDGE CLOSED	UNTIL TUESDAY 5:00 AM
	IP-118	SM	EB	92	7.2	W of 92/280 JCT	BAY BRIDGE CLOSED	LABOR DAY WEEKEND	BAY BRIDGE CLOSED	FRI 8 P.M THRU TUE 5 AM	BAY BRIDGE CLOSED	UNTIL TUESDAY 5:00 AM
	IP-119	SM	NB	280	10.3	S of 280/92 JCT	BAY BRIDGE CLOSED	LABOR DAY WEEKEND	BAY BRIDGE CLOSED	FRI 8 P.M THRU TUE 5 AM	BAY BRIDGE CLOSED	UNTIL TUESDAY 5:00 AM
	IP-120	SM				SAN FRANCISCO AIRPORT	BAY BRIDGE CLOSED	LABOR DAY WEEKEND	BAY BRIDGE CLOSED	FRI 8 P.M THRU TUE 5 AM	BAY BRIDGE CLOSED	UNTIL TUESDAY 5:00 AM
	IP-121	SF	WB	80		WB 80 ONRAMP EASTSIDE OF YBI	BAY BRIDGE CLOSED	LABOR DAY WEEKEND	BAY BRIDGE CLOSED	FRI 8 P.M THRU TUE 5 AM	BAY BRIDGE CLOSED	UNTIL TUESDAY 5:00 AM
	IP-122	SF	WB	80		WB 80 ONRAMP WESTSIDE OF YBI	BAY BRIDGE CLOSED	LABOR DAY WEEKEND	BAY BRIDGE CLOSED	FRI 8 P.M THRU TUE 5 AM	BAY BRIDGE CLOSED	UNTIL TUESDAY 5:00 AM
	IP-123	SAC	WB	80		SACRAMENTO AIRPORT (location TBD)	BAY BRIDGE CLOSED	LABOR DAY WEEKEND	BAY BRIDGE CLOSED	FRI 8 P.M THRU TUE 5 AM	BAY BRIDGE CLOSED	UNTIL TUESDAY 5:00 AM
	IP-124	SJ	NB	101		SAN JOSE AIRPORT (Location TBD)	BAY BRIDGE CLOSED	LABOR DAY WEEKEND	BAY BRIDGE CLOSED	FRI 8 P.M THRU TUE 5 AM	BAY BRIDGE CLOSED	UNTIL TUESDAY 5:00 AM
	IP-125	SF	SB	280		280S/101S Gore Split	BAY BRIDGE CLOSED	LABOR DAY WEEKEND	BAY BRIDGE CLOSED	FRI 8 P.M THRU TUE 5 AM	BAY BRIDGE CLOSED	UNTIL TUESDAY 5:00 AM
	IP-126	SF	NB	280		NB 280 before Geneva Ave	BAY BRIDGE CLOSED	LABOR DAY WEEKEND	BAY BRIDGE CLOSED	FRI 8 P.M THRU TUE 5 AM	BAY BRIDGE CLOSED	UNTIL TUESDAY 5:00 AM
	IP-127	SF	NB	280		NB 280 before 101 split	BAY BRIDGE CLOSED	LABOR DAY WEEKEND	BAY BRIDGE CLOSED	FRI 8 P.M THRU TUE 5 AM	BAY BRIDGE CLOSED	UNTIL TUESDAY 5:00 AM
	IP-128	SF	NB	280		Northbound 280 Before Mariposa	BAY BRIDGE CLOSED	LABOR DAY WEEKEND	BAY BRIDGE CLOSED	FRI 8 P.M THRU TUE 5 AM	BAY BRIDGE CLOSED	UNTIL TUESDAY 5:00 AM
	IP-129	SF	NB	Mision St.		NB Mission St before Cesar Chavez St	BAY BRIDGE CLOSED	LABOR DAY WEEKEND	BAY BRIDGE CLOSED	FRI 8 P.M THRU TUE 5 AM	BAY BRIDGE CLOSED	UNTIL TUESDAY 5:00 AM
	IP-130	SF	NB	Bayshore		NB Bayshore Blvd After Geneva Ave	BAY BRIDGE CLOSED	LABOR DAY WEEKEND	BAY BRIDGE CLOSED	FRI 8 P.M THRU TUE 5 AM	BAY BRIDGE CLOSED	UNTIL TUESDAY 5:00 AM
***	IP-131	Alameda	WB	92		880 south at 92 W Connector facing connector traffic	BAY BRIDGE CLOSED	LABOR DAY WEEKEND	BAY BRIDGE CLOSED	FRI 8 P.M THRU TUE 5 AM	BAY BRIDGE CLOSED	UNTIL TUESDAY 5:00 AM
***	IP-132	Alameda	WB	92		92 W before North Connector facing 92 W traffic	BAY BRIDGE CLOSED	LABOR DAY WEEKEND	BAY BRIDGE CLOSED	FRI 8 P.M THRU TUE 5 AM	HESPERIAN BLVD TRAFFIC	USE INDUSTRIAL
***	IP-133	Alameda	WB	92		92 W After 880S/92W connector facing 92 W traffic	BAY BRIDGE CLOSED	LABOR DAY WEEKEND	BAY BRIDGE CLOSED	FRI 8 P.M THRU TUE 5 AM	HESPERIAN BLVD TRAFFIC	USE INDUSTRIAL
	IP-134		SB	101		A Mile Prior to 92	BAY BRIDGE CLOSED	LABOR DAY WEEKEND	BAY BRIDGE CLOSED	FRI 8 P.M THRU TUE 5 AM	BAY BRIDGE CLOSED	UNTIL TUESDAY 5:00 AM
	IP-135		SB	880		Half a Mile Prior to 92	BAY BRIDGE CLOSED	LABOR DAY WEEKEND	BAY BRIDGE CLOSED	FRI 8 P.M TUE 5 AM	BAY BRIDGE CLOSED	UNTIL TUESDAY 5:00 AM
	IP-136		NB	101		Half a Mile Prior to 84	BAY BRIDGE CLOSED	LABOR DAY WEEKEND	BAY BRIDGE CLOSED	FRI 8 P.M THRU TUE 5 AM	BAY BRIDGE CLOSED	UNTIL TUESDAY 5:00 AM
	IP-137		WB	580		A Half a Mile Prior to 238/580	BAY BRIDGE CLOSED	LABOR DAY WEEKEND	BAY BRIDGE CLOSED	FRI 8 P.M THRU	BAY BRIDGE CLOSED	UNTIL TUESDAY 5:00 AM
	IP-138	CC	WB	80		Between Richmond Pkwy and Cutting Blvd	BAY BRIDGE CLOSED	LABOR DAY WEEKEND	BAY BRIDGE CLOSED	FRI 8 P.M THRU TUE 5 AM	BAY BRIDGE CLOSED	UNTIL TUESDAY 5:00 AM
	IP-139	Mrn	SB	101		One Mile Before Anderson Exit					BAY BRIDGE CLOSED	UNTIL TUESDAY 5:00 AM
	IP-140	Mrn	WB	580		Quarter Mile Before San Quentin			BAY BRIDGE CLOSED	FRI 8 P.M THRU TUE 5 AM	BAY BRIDGE CLOSED	UNTIL TUESDAY 5:00 AM
	IP-141	Mrn	WB	580		One Mile Before Sir Framnces Drake Blvd			BAY BRIDGE CLOSED	FRI 8 P.M THRU TUE 5 AM	BAY BRIDGE CLOSED	UNTIL TUESDAY 5:00 AM
	IP- 142	Mrn	NB	101		Half Mile Before Sir Frances Drake					FERRY TERMINAL NEXT EXIT	UNTIL TUESDAY 5:00 AM
	IP-143	Mrn	SB	101		Half Mile Before Sir Frances Drake					FERRY TERMINAL NEXT EXIT	UNTIL TUESDAY 5:00 AM
	IP-144	SM	SFO			International Terminal Outbound Ramp Facing Traffic Upper Level			BAY BRIDGE CLOSED	FRI 8 P.M THRU TUE 5 AM	BAY BRIDGE CLOSED	UNTIL TUESDAY 5:00 AM

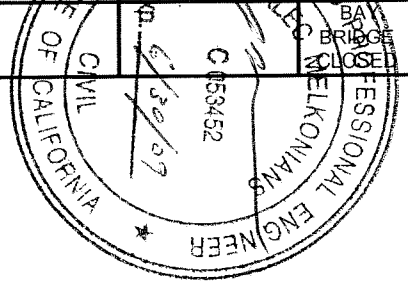

CONTRACT NO. 04-0120F4
CONTRACT CHANGE ORDER NO 76-SV
SHEET 12 OF 13

IP-145	SM	SFO			Domestic Terminal Outbound Ramp Facing Traffic Lower Level			BAY BRIDGE CLOSED	FRI 8 P.M THRU TUE 5 AM	BAY BRIDGE CLOSED	UNTIL TUESDAY 5:00 AM
IP-146	SM	SFO			Rental Car Facility on North McDonnell Rd Facing Exiting Traffic			BAY BRIDGE CLOSED	FRI 8 P.M THRU TUE 5 AM	BAY BRIDGE CLOSED	UNTIL TUESDAY 5:00 AM
1P-147	SM	SFO			Long Term Parking Garrage EXIT Facing Exiting Traffic			BAY BRIDGE CLOSED	FRI 8 P.M THRU TUE 5 AM	BAY BRIDGE CLOSED	UNTIL TUESDAY 5:00 AM
IP-148	SM	SFO			Long Term Parking Surface Lot Exit Facing Exiting Traffic			BAY BRIDGE CLOSED	FRI 8 P.M THRU TUE 5 AM	BAY BRIDGE CLOSED	UNTIL TUESDAY 5:00 AM

Note *** Turn on Three weeks in advance

Note **** Keep CMS Blank. Display Message on CMS only when requested for Labor day Weekend

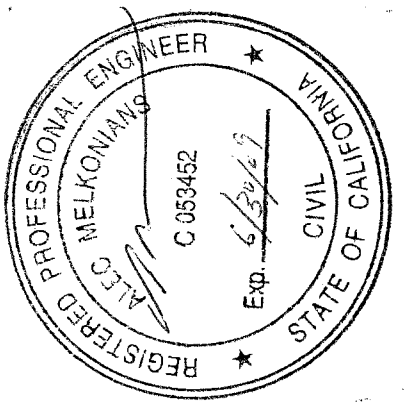

CONTRACT NO. 04-0120R4

CONTRACT CHANGE ORDER NO 76-51

SHEET 13 OF 13

STATE OF CALIFORNIA - DEPARTMENT OF TRANSPORTATION

CONTRACT CHANGE ORDER MEMORANDUM

RECEIVED

TO: MIKE FORNER / DENNIS TURCHON	FILE: **E.A.** 04 - 0120R4
	CO-RTE-PM SF-80-12.6/13.2
FROM: MAHANTESH ANIGOL	**FED. NO.** ACBRIM-080-1(097)N 006787 DEC
CCO#: **76** SUPPLEMENT#: **1** Category Code: **CHPT**	CONTINGENCY BALANCE (incl. this change) **$34,812,438.90**
COST: **$10,144,140.00** INCREASE ☑ DECREASE ☐	HEADQUARTERS APPROVAL REQUIRED? ☑ YES ☐ NO
SUPPLEMENTAL FUNDS PROVIDED: **$0.00**	IS THIS REQUEST IN ACCORDANCE WITH ENVIRONMENTAL DOCUMENTS? ☑ YES ☐ NO
CCO DESCRIPTION: Labor Day Weekend Bridge Removal	**PROJECT DESCRIPTION:** CONSTRUCT ROUTE 80 TEMP BYPASS STRUCTURE

Original Contract Time:	Time Adj. This Change:	Previously Approved CCO Time Adjustments:	Percentage Time Adjusted: (including this change)	Total # of Unreconciled Deferred Time CCO(s): (including this change)
475 Day(s)	**0** Day(s)	**381** Day(s)	**80** %	**7**

THIS CHANGE ORDER PROVIDES FOR:

compensation to the contractor for the bridge removal and replacement of the upper deck of Yerba Buena Island concrete viaduct and provide compensation for the closure of the San Francisco Oakland Bay Bridge (SFOBB) during Labor Day Weekend of 2007 during which the removal and replacement operations shall be performed.

The project calls for the construction of a Temporary Bypass Structure in order to allow for the tie in of the new SFOBB east span to the existing Yerba Buena Island (YBI) concrete viaduct. The Department issued a December 14, 2006 memo entitled Strategy for South-South Detour Contract Completion which was approved by both Tony Anziano (Toll Bridge Program Manager) and Richard Land (Chief Engineer). This strategy memo provided for the retrofit of the existing upper deck of the YBI concrete viaduct at the western tie in of the temporary bypass structure. Previously, this retrofit work would have been performed after the completion of the SAS project.

Change Order No. 61, Supplement No. 1 was issued to construct the replacement upper deck structure adjacent to the existing structure. The replacement of the existing structure with this retrofit structure shall take place during a full closure of the SFOBB on Labor Day Weekend of 2007. The work shall encompass the removal of the existing structure and the roll in of the replacement structure. The original Change Order No. 76 provided partial compensation for mobilization costs associated with the Labor Day Weekend bridge removal. This change order provides the remaining compensation for all costs associated with the bridge removal and roll in and the implementation of the Department's Traffic Management Plan for the weekend closure.

Major costs associated with the work include the bridge demolition and roll in costs, the placement and operation of 150 portable changeable message signs over a three week period, traffic control costs, asphalt paving, jobsite access, flagging and the use of traffic control officers in numerous cities affected by the bridge closure to help limit traffic congestion on a regional basis.

This change order also provides for the elimination of the planned bridge removal work called for under the original contract plans. This work required a partial removal of the existing structure that would have allowed traffic to transition to the temporary bypass structure. The retrofit of the existing structure, called for under the Department's strategy memo, replaces this partial bridge removal with the complete removal of the structure.

Elimination of the planned bridge removal work shall be made by eliminating the specified contract item at a savings of $1,410,000.00. Compensation for the bridge removal and roll in, changeable message signs and traffic control shall be paid as extra work at an agreed lump sum of $10,554,140.00. Compensation for providing city traffic control officers and providing a water taxi for the U.S. Coast Guard facilities adjacent to the work shall be paid as extra work at force account at an estimated costs $1,000,000.00. The net change order cost of $10,144,140 shall be financed from the contract's contingency funds. A cost analysis is on file.

FHWA concurrence not required as they are no longer providing funds for this project. TBPOC provided approval of this change on 08/24/07.

No adjustment of contract time is warranted by this change, as it does not affect the controlling operation.

ADA Notice: For individuals with sensory disabilities, this document is available in alternate formats. For information call: (916) 654-6410 or TDD (916) 654-3880 or write Records and Forms Management, 1120 N Street, MS-89, Sacramento, CA 95814.

CONCURRED BY:			
Construction Engineer:	Mahantesh Anigol, Resident Engin	Date	8/27/07
Bridge Engineer:	Tom Ostrom, OSD	Date	8/2/07
Project Engineer:	Hong Wong	Date	8/2/07
Project Manager:	Alec Melkonians	Date	8/2/07
FHWA Rep.:	N/A	Date	
Environmental:		Date	
Other (specify):	Raoul Maltez, Construction Traffic	Date	8/20/07
Other (specify):	Robert Kobal, HQ Asst.Const.Coor	Date	
District Prior Approval By:		Date	
HQ (Issue Approve) By:	Ken Darby, HQ CCO Engineer	Date	8/2/07
Resident Engineer's Signature:	M. U. Anigol	Date	8/27/07

ESTIMATE OF COST

	THIS REQUEST	TOTAL TO DATE
ITEMS	($1,410,000.00)	($1,410,000.00)
FORCE ACCOUNT	$1,000,000.00	$1,000,000.00
AGREED PRICE	$10,554,140.00	$12,794,440.00
ADJUSTMENT	$0.00	$0.00
TOTAL	$10,144,140.00	$12,384,440.00

FEDERAL PARTICIPATION

☐ PARTICIPATING ☐ PARTICIPATING IN PART ☐ NONE
☐ NON-PARTICIPATING (MAINTENANCE) ☑ NON-PARTICIPATING

FEDERAL SEGREGATION (if more than one Funding Source or P.I.P. type)
☑ CCO FUNDED PER CONTRACT ☐ CCO FUNDED AS FOLLOWS

FEDERAL FUNDING SOURCE	PERCENT

ADA Notice: For individuals with sensory disabilities, this document is available in alternate formats. For information call: (916) 654-6410 or TDD (916) 654-3880 or write Records and Forms Management, 1120 N Street, MS-89, Sacramento, CA 95814.

STATE OF CALIFORNIA - DEPARTMENT OF TRANSPORTATION

CONTRACT CHANGE ORDER

Change Requested by: Engineer

CCO 77	Suppl. No. 0	Contract No. 04 - 0120R4	Road SF-80-12.6/13.2	FED. AID LOC.: ACBRIM-080-1(097)N

To: **CC MYERS INC**

You are directed to make the following changes from the plans and specifications or do the following described work not included in the plans and specifications for this contract. ***NOTE: This change order is not effective until approved by the Engineer.***

Description of work to be done, estimate of quantities and prices to be paid. (Segregate between additional work at contract price, agreed price and force account.) Unless otherwise stated, rates for rental of equipment cover only such time as equipment is actually used and no allowance will be made for idle time. This last percentage shown is the net accumulated increase or decrease from the original quantity in the Engineer's Estimate.

Extra Work at Lump Sum:

Furnish additional labor, equipment, material, supplies, and other resources as required to construct the foundation and column, complete in place, for Bridge No. 34-0006L, Bent W4L in accordance with the attached plans (Sheets 2 through 9) and the CCO No. 64 specifications. The attached plans are for Bent W4L only.

All "Payment" clauses contained within this change order's specifications are amended such that all work performed under this change will be compensated for as extra work at agreed lump sum as part of this change order.

For this work, the Contractor will be paid the sum of $7,125,000.00. This amount constitutes full compensation, including markups, for all labor, equipment, materials, and all incidentals to complete the work of this change except for the following items:

1) Compensation for all additional SWPPP work associated with this change shall be compensated for separately.
2) Time related costs and impacts as a result of this change shall be compensated for under separate change order.

Consideration of a time adjustment shall be deferred until completion of work specified herein. Determination of a commensurate time extension will be made in accordance with Section 8-1.07 Liquidated Damages of the Standard Specifications.

Estimated cost of Extra Work at Lump Sum $7,125,000.00

Estimated Cost: **Increase** ☑ **Decrease** ☐ **$7,125,000.00**

By reason of this order the time of completion will be adjusted as follows: Deferred

Submitted by

Signature	Resident Engineer	Date
M. U. Anigol	MAHANTESH ANIGOL	7/16/07

Approval Recommended by

Signature	Area Construction Manager	Date
Michael Forner	MIKE FORNER	7/17/07

Engineer Approval by

Signature	SFOBB Construction Manager	Date
Michael Forner	MIKE FORNER	7/20/07

We the undersigned contractor, have given careful consideration to the change proposed and agree, if this proposal is approved, that we will provide all equipment, furnish the materials, except as may otherwise be noted above, and perform all services necessary for the work above specified, and will accept as full payment therefor the prices shown above.

NOTE: If you, the contractor, do not sign acceptance of this order, your attention is directed to the requirements of the specifications as to proceeding with the ordered work and filing a written protest within the time therein specified.

Contractor Acceptance by

Signature	(Print name and title)	Date
D. Hamick	DANIEL E. HAMICK, PRESIDENT	7/19/07

Caltrans Metric

REGISTERED ENGINEER - CIVIL

PROFESSIONAL ENGINEER — A.L. ELY — No. 18880 — Exp. 6-30-07 — CIVIL — STATE OF CALIFORNIA

PLANS APPROVAL DATE

The State of California or its officers or agents shall not be responsible for the accuracy or completeness of electronic copies of this plan sheet.

T.Y.LIN / MOFFATT & NICHOL
TWO HARRISON STREET
SAN FRANCISCO, CA 94105

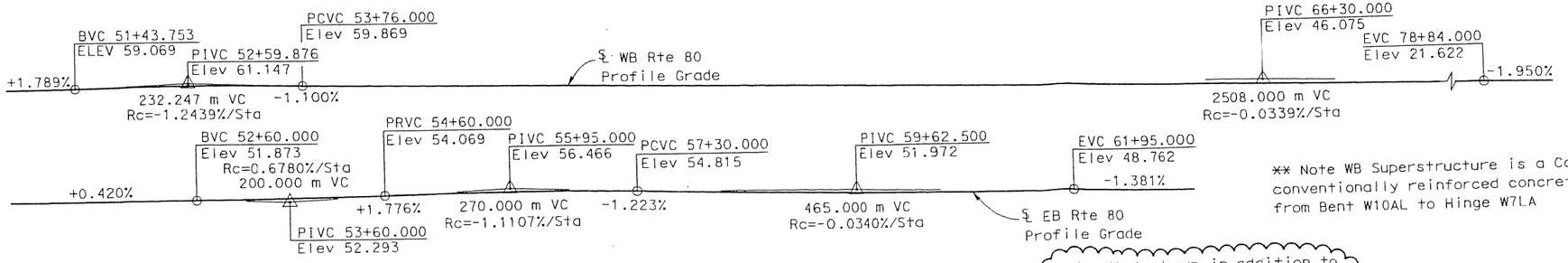

PROFILE GRADE
NO SCALE

** Note WB Superstructure is a Cast-in-Place conventionally reinforced concrete box girder from Bent W10AL to Hinge W7LA

Note: Work shown in addition to that designated as "Advance Const Work" is for informational purposes only.

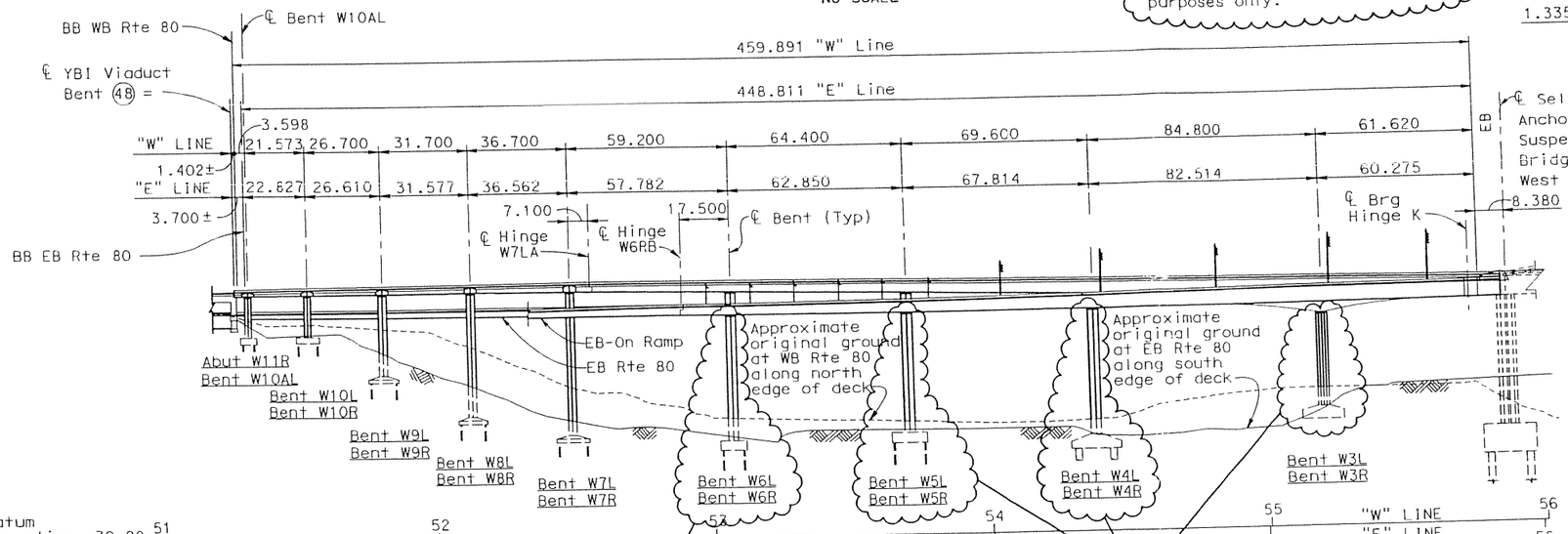

ELEVATION
1:1000

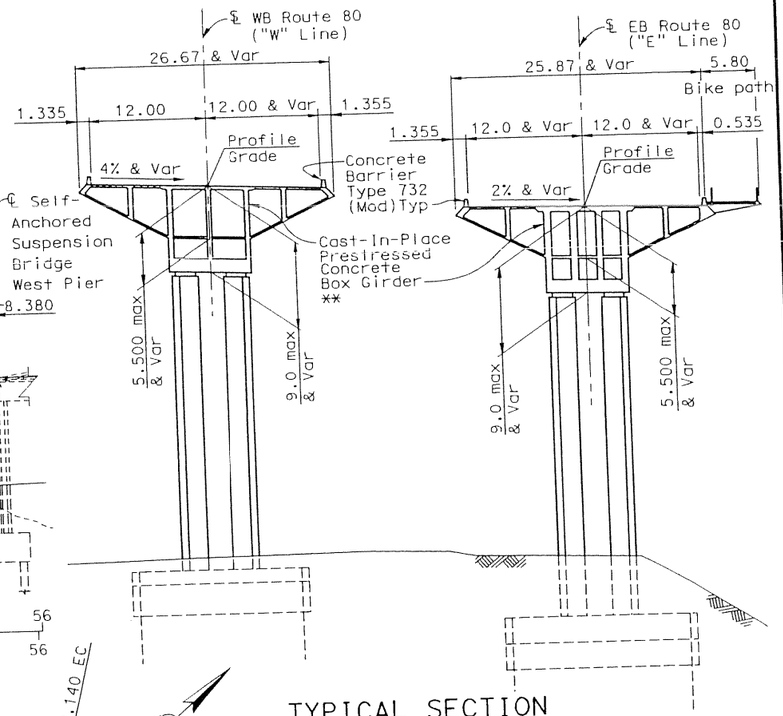

TYPICAL SECTION
(Bent W3L & W3R Shown)
1:300

Notes:
For approximate bridge quantities and pile data table, see "General Notes" sheet.

———— Indicates existing structures.

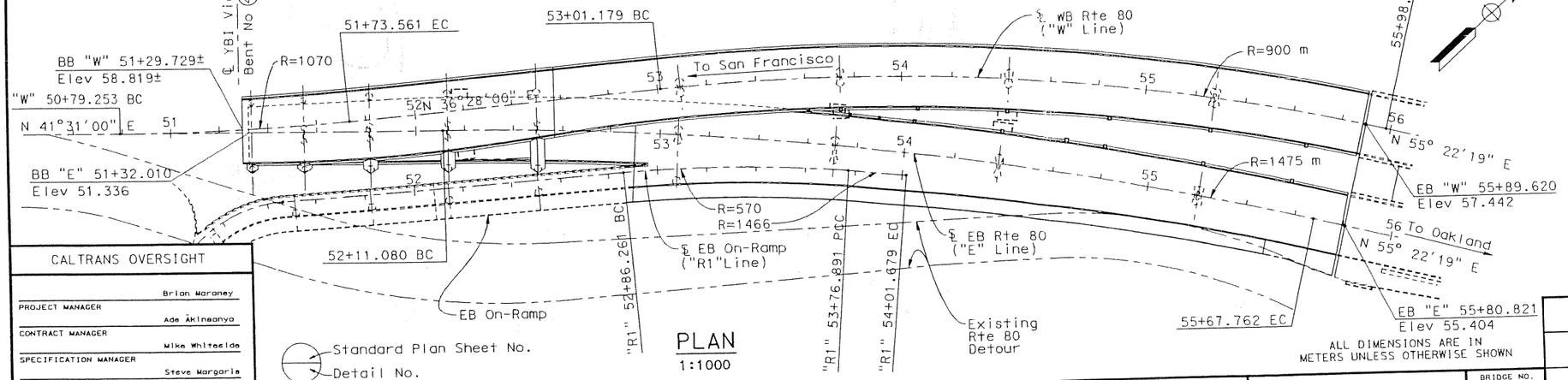

Standard Plan Sheet No.
Detail No.

PLAN
1:1000

ALL DIMENSIONS ARE IN METERS UNLESS OTHERWISE SHOWN

Contract No. 04-0220R4
SUPPLEMENTAL SHEET

CONTRACT CHANGE ORDER NO. 77
SHEET 2 OF 9

CALTRANS OVERSIGHT	
PROJECT MANAGER	Brian Maroney
CONTRACT MANAGER	Ade Akinsanya
SPECIFICATION MANAGER	Mike Whiteside
SPECIFICATION OVERSIGHT	Steve Margorie

DESIGN OVERSIGHT: JOHN MOOK, BERNARD CHAN, JUAN F. CARPIO
SIGN OFF DATE

	BY	CHECKED
DESIGN	Desai	Jain
DETAILS	van Ryn/Zucchi/Mai	Jain
QUANTITIES	Liao	E. Nichol

LOAD FACTOR DESIGN — LIVE LOADING: HS20-44 AND ALTERNATIVE AND PERMIT DESIGN LOAD

	BY	CHECKED
LAYOUT	Desai	Alcaraz
SPECIFICATIONS	J.Ely	PLANS AND SPECS COMPARED Jain

ORIGINAL SCALE IN MILLIMETERS FOR REDUCED PLANS (0 10 20 30 40 50 60 70 80 90 100)

Rev. Date: 5-18-98

PREPARED FOR THE STATE OF CALIFORNIA DEPARTMENT OF TRANSPORTATION

Jal Birdy
PROJECT ENGINEER

CU 04251
EA 012051

FILE => K:\4141-06\CADD\TS\Final Const\Adv Const Pkg 1R2\eagp0.dgn

BRIDGE NO.	34-0006 L/R
KILOMETER POST	12.8

DISREGARD PRINTS BEARING EARLIER REVISION DATES

REVISION DATES (PRELIMINARY STAGE ONLY): 11/14/06 11/27/06 11/29/06 3/28/02 5/14/02 2/24/03 3/2006 8/24/06 10/31/06 11/30/06

SHEET 1 OF 65

SAN FRANCISCO OAKLAND BAY BRIDGE
EAST SPAN SEISMIC SAFETY PROJECT

YBI TRANSITION STRUCTURES

ADVANCE CONST PACKAGE NO.1R2

GENERAL PLAN

Nov 29, 2006 | Datum Elevation -30.00 | TIME PLOTTED => 3:21:35 PM | DATE PLOTTED => 11/29/2006 | USERNAME => fsamson

DIST.	COUNTY	ROUTE	KILOMETER POST TOTAL PROJECT	SHEET NO.	TOTAL SHEETS
04	SF	80		58	137

Caltrans Metric

A. L. Ely
REGISTERED ENGINEER - CIVIL

PLANS APPROVAL DATE

The State of California or its officers or agents shall not be responsible for the accuracy or completeness of electronic copies of this plan sheet.

REGISTERED PROFESSIONAL ENGINEER — A.L. ELY — No. 18880 — Exp. 6-30-07 — CIVIL — STATE OF CALIFORNIA

T.Y. LIN / MOFFATT & NICHOL
TWO HARRISON STREET
SAN FRANCISCO, CA 94105

APPROXIMATE BRIDGE QUANTITIES

	WB STRUCTURE	EB STRUCTURE	TOTAL
STRUCTURE EXCAVATION (BRIDGE)	2898	5919	8820 M3
STRUCTURE EXCAVATION (TYPE D)	-	542	540 M3
STRUCTURE EXCAVATION (TYPE H)	244	708	950 M3
STRUCTURE EXCAVATION (CLASS I)	-	54	50 M3
STRUCTURE EXCAVATION (ROCK)	3098	3945	7040 M3
STRUCTURE BACKFILL (BRIDGE)	2223	5355	7580 M3
FURNISH STEEL PILING (W 360 X 237)	6521	4164	10685 M
DRIVE STEEL PILE (W 360 X 237)	352	240	592 EA
2400MM CAST-IN-DRILLED-HOLE CONCRETE PILING	-	109	109 M
2400MM CAST-IN-DRILLED HOLE CONCRETE PILING (ROCK SOCKET)	-	68	68 M
TIEDOWN ANCHOR	68	36	104 EA
STRUCTURAL CONCRETE, BRIDGE FOOTING	3925	5562	9490 M3
STRUCTURAL CONCRETE, BRIDGE	3573	3777	7350 M3
BAR REINFORCING STEEL (BRIDGE)	1375072	1835160	3210230 KG
BRIDGE DECK DRAINAGE SYSTEM	487	341	830 KG

PILE DATA								
LOCATION	DESIGN LOADING	NOMINAL RESISTANCE COMPRESSION	NOMINAL RESISTANCE TENSION	DESIGN TIP ELEVATION (1)	(2)	(3)	SPECIFIED TIP ELEVATION	MINIMUM ROCK SOCKET LENGTH
PILE TYPE W 360 x 237								
BENT W6L	1350 kN	2700 kN	1350 kN	11.5	6.5	-2.0	-11.5	
BENT W5L	1350 kN	2700 kN	1350 kN	-10.5	-6.5	-3.0	-10.5	
BENT W6R NORTH COLUMN	1350 kN	2700 kN	1350 kN	-11.5	-6.5	-2.0	-11.5	
BENT W6R SOUTH COLUMN	1350 kN	2700 kN	1350 kN	-18.0	-13.5	-4.5	-18.0	
BENT W5R	1350 kN	2700 kN	1350 kN	-16.5	-11.0	-5.5	-16.5	
2400 mm DIA CIDH CONCRETE PILES								
BENT W4R PILE NO. 1	-	25200 kN	8900 kN	-15.0	-15.0	-15.0	-15.0	3.5
BENT W4R PILE NOS. 2 & 3	-	25200 kN	8900 kN	-13.5	-13.5	-13.5	-13.5	3.5
BENT W4R PILE NOS. 4,5 & 6	-	25200 kN	8900 kN	-12.5	-12.5	-12.5	-12.5	3.5
BENT W4R PILE NOS. 7 & 8	-	25200 kN	8900 kN	-12.0	-12.0	-12.0	-12.0	4.0
BENT W4R PILE NOS. 9,10 & 11	-	25200 kN	8900 kN	-10.0	-10.0	-10.0	-10.0	4.0
BENT W4R PILE NO.12	-	25200 kN	8900 kN	-9.5	-9.5	-9.5	-9.5	4.5
BENT W4R PILE NOS. 13,14 & 15	-	25200 kN	8900 kN	-8.0	-8.0	-8.0	-8.0	4.5
BENT W4R PILE NOS. 16 & 17	-	25200 kN	8900 kN	-6.0	-6.0	-6.0	-6.0	4.5

Design tip elevation is controlled by the following demands: (1) Compression, (2) Tension, (3) Lateral.
Rock socket lengths shown represent minimum embedment into moderately hard rock.

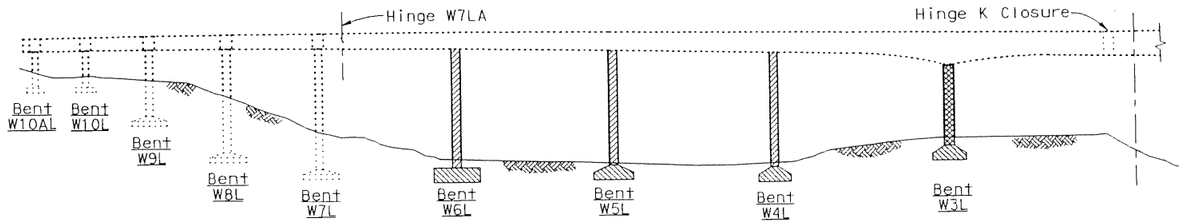

WESTBOUND TRANSITION STRUCTURE

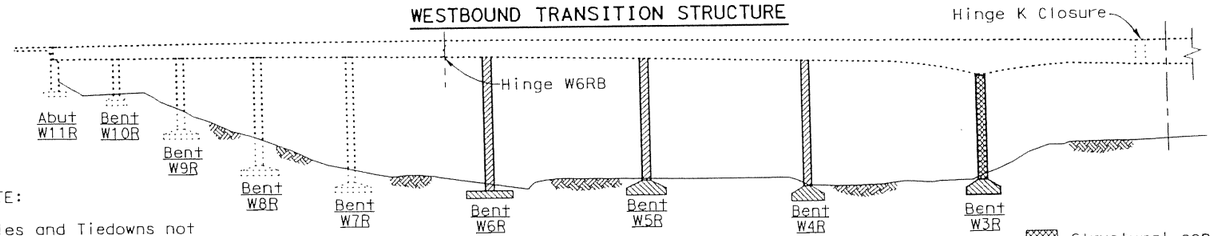

EASTBOUND TRANSITION STRUCTURE

NOTE:
Piles and Tiedowns not shown for clarity.

ALL DIMENSIONS ARE IN METERS UNLESS OTHERWISE SHOWN

GENERAL NOTES

Load Factor Design

Design: Caltrans Design Specifications-April 2000 (LFD)
(1996 AASHTO with interims and revisions by Caltrans)
Dead Load: Includes 1675 N/m2 for future wearing surface on roadbed
Live Load: HS20-44 and alternative and permit design load
Bike Path Live Load: 4000 N/m2
Future Mass Transit Loading:

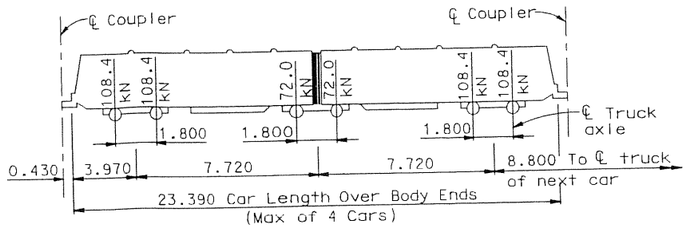

Seismic Loading: Refer to project specific seismic design criteria
for San Francisco Oakland Bay Bridge
East Span Seismic Safety Project Dated 01-08-00
See "Site Specific Response Spectra"

Reinforced Concrete: Fy = 420 MPa
F'c = See "Concrete Strength & Type Limits"

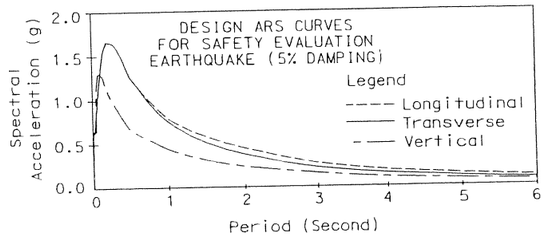

SITE SPECIFIC RESPONSE SPECTRA

FOOTING PRESSURE			
	ALLOWABLE	ULTIMATE	MAX DESIGN (SERVICE LOAD)
BENT W4L	1800 kN/m2	5400 kN/m2	765 kN/m2
BENT W3L	1550 kN/m2	4650 kN/m2	765 kN/m2
BENT W3R	1350 kN/m2	4050 kN/m2	765 kN/m2

APPLICABLE STANDARD PLANS (DATED JULY 1999)

A10A	ABBREVIATIONS
A10B	SYMBOLS
A62B	LIMITS OF PAYMENT FOR EXCAVATION AND BACKFILL - BRIDGE SURCHARGE AND WALL
A62C	LIMITS OF PAYMENT FOR EXCAVATION AND BACKFILL - BRIDGE
B0-1	BRIDGE DETAILS
B7-6	DECK DRAINS TYPES D-1 AND D-2

INDEX TO BRIDGE PLANS

1. GENERAL PLAN
2. GENERAL NOTES
3. FOUNDATION PLAN NO. 1
4. FOUNDATION PLAN NO. 2
5. PILE & TIEDOWN ANCHOR DETAILS
6. BENT ELEVATIONS W6 & W5
7. BENT ELEVATIONS W4 & W3
8. BENT W6L DETAILS NO. 1
9. BENT W6L DETAILS NO. 2
10. BENT W5L DETAILS NO. 1
11. BENT W5L DETAILS NO. 2
12. BENT W4L DETAILS NO. 1
13. BENT W4L DETAILS NO. 2
14. BENT W3L DETAILS NO. 1
15. BENT W3L DETAILS NO. 2
16. BENT W6R DETAILS NO. 1
17. BENT W6R DETAILS NO. 2
18. BENT W6R DETAILS NO. 3
19. BENT W5R DETAILS NO. 1
20. BENT W5R DETAILS NO. 2
21. BENT W4R DETAILS NO. 1
22. BENT W4R DETAILS NO. 2
23. BENT W3R DETAILS NO. 1
24. BENT W3R DETAILS NO. 2

25-45. LOG OF TEST BORINGS NO. 1 TO NO. 21
46-65. "AS BUILT" LOG OF TEST BORINGS NO. 1 TO NO. 20

Contract No. 04-012024
SUPPLEMENTAL SHEET

CONTRACT CHANGE ORDER NO. 77
SHEET 3 OF 9

CONCRETE STRENGTH & TYPE LIMITS

Structural concrete, bridge (35 MPa at 28 days)
Structural concrete, bridge (25 MPa at 28 days)
Structural concrete, bridge footing (25 MPa at 28 days)

DESIGN OVERSIGHT
JOHN MOOK, BERNARD CHAN, JUAN F. CARPIO
SIGN OFF DATE

Rev. Date: 5-18-98

	BY	CHECKED
DESIGN	Desai	Jain
DETAILS	van Ryn/Zucchi/Wai	Jain
QUANTITIES	Liao	E. Nichol

PREPARED FOR THE STATE OF CALIFORNIA DEPARTMENT OF TRANSPORTATION

Jal Birdy
PROJECT ENGINEER

CU 04251
EA 0120S1

ORIGINAL SCALE IN MILLIMETERS FOR REDUCED PLANS 0 10 20 30 40 50 60 70 80 90 100

FILE => k:\4141-06\CADD\TS\Final Const\Adv Const Pkg 1R2\eoitp02.dgn

BRIDGE NO. 34-0006 L/R
KILOMETER POST 12.8

DISREGARD PRINTS BEARING EARLIER REVISION DATES

REVISION DATES (PRELIMINARY STAGE ONLY): 11/24/06 11/27/06 11/29/06 3/26/02 5/28/02 2/24/03 3/04 8/08/06 10/17/06 11/28/06

SAN FRANCISCO OAKLAND BAY BRIDGE
EAST SPAN SEISMIC SAFETY PROJECT

YBI TRANSITION STRUCTURES

ADVANCE CONST PACKAGE NO.1R2

GENERAL NOTES

SHEET 2 OF 65

Nov 29, 2006

TIME PLOTTED => 3:21:48 PM
DATE PLOTTED => 11/29/2006
USERNAME => fsamson

DIST.	COUNTY	ROUTE	KILOMETER POST TOTAL PROJECT	SHEET NO.	TOTAL SHEETS
04	SF	80		60	137

Caltrans Metric

REGISTERED ENGINEER - CIVIL

PLANS APPROVAL DATE

REGISTERED PROFESSIONAL ENGINEER A.L. ELY No. 18880 Exp. 6-30-07 CIVIL STATE OF CALIFORNIA

The State of California or its officers or agents shall not be responsible for the accuracy or completeness of electronic copies of this plan sheet.

T.Y. LIN / MOFFATT & NICHOL
TWO HARRISON STREET
SAN FRANCISCO, CA 94105

NOTE:

1. For limits of payment for structure excavation and backfill, see "Pile & Tiedown Anchor Details" sheet.
2. Utility locations shown are approximate, for utility relocations and abandonments see rdwy plans.

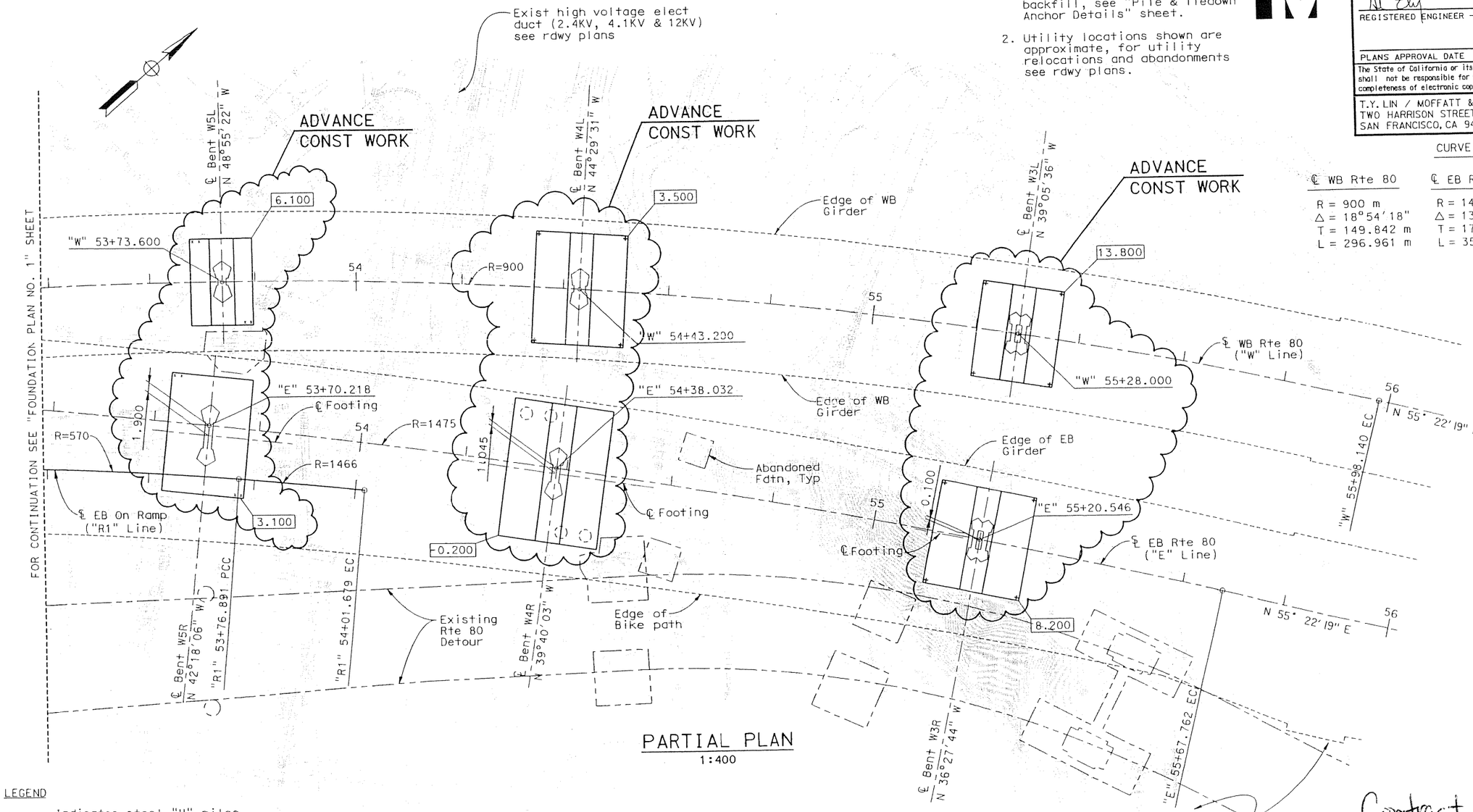

PARTIAL PLAN
1:400

CURVE DATA

℄ WB Rte 80	℄ EB Rte 80	℄ EB On-Ramp
R = 900 m	R = 1475 m	R = 570 m
Δ = 18°54'18"	Δ = 13°51'19"	Δ = 09°06'36"
T = 149.842 m	T = 179.215 m	T = 45.411 m
L = 296.961 m	L = 356.682 m	L = 90.630 m
		R = 1466 m
		Δ = 00°58'08"
		T = 12.394 m
		L = 24.788 m

LEGEND

- H — Indicates steel "H" piles (All steel piles not shown)
- ○ — Indicates CIDH piles (All CIDH piles not shown)
- + — Indicates tiedown anchors (All tiedown anchors not shown)
- ▭ — Denotes bottom of footing elevation
- — - - — Denotes existing structure

Note: Work shown in addition to that designated as "Advance Const Work" is for informational purposes only.

Contract No 04-0120R4

SUPPLEMENTAL SHEET

CONTRACT CHANGE ORDER NO. 77

SHEET 4 OF 9

ALL DIMENSIONS ARE IN METERS UNLESS OTHERWISE SHOWN

SAN FRANCISCO OAKLAND BAY BRIDGE
EAST SPAN SEISMIC SAFETY PROJECT

YBI TRANSITION STRUCTURES

ADVANCE CONST PACKAGE NO.1R2

FOUNDATION PLAN NO.2

DESIGN OVERSIGHT	SCALE:	VERT.DATUM NGVD 29	HORZ.DATUM NAD 83	DESIGN	BY Desai	CHECKED Jain	PREPARED FOR THE STATE OF CALIFORNIA DEPARTMENT OF TRANSPORTATION	Jal Birdy	BRIDGE NO. 34-0006 L/R
JOHN MOOK, BERNARD CHAN, JUAN F. CARPIO	PHOTOGRAMMETRY AS OF:		ALIGNMENT TIES	DETAILS	BY Van Ryn/Zucchi/Mai	CHECKED Jain		PROJECT ENGINEER	KILOMETER POST 12.8
SIGN OFF DATE	SURVEYED BY		DRAFTED BY	QUANTITIES	BY Liao	CHECKED E. Nichol		CU 04251 EA 0120S1	
	FIELD CHECKED BY		CHECKED BY						

Rev. Date: 5-18-98

ORIGINAL SCALE IN MILLIMETERS FOR REDUCED PLANS 0 10 20 30 40 50 60 70 80 90 100

DISREGARD PRINTS BEARING EARLIER REVISION DATES

REVISION DATES (PRELIMINARY STAGE ONLY) 11/14/06 11/21/06 11/29/06 3/26/02 5/10/02 2/14/03 7/3/06 8/18/06 10/31/06 11/30/06

SHEET 4 OF 65

FILE => k:\4141-06\CADD\TS\Final Const\Adv Const Pkg 1R2\ecfnp02.dgn

USERNAME => fsamson DATE PLOTTED => 11/29/2006 TIME PLOTTED => 3:22:13 PM

Nov 29, 2006

GEOTECHNICAL PROFESSIONAL APPROVAL DATE 11/29/06

DIST.	COUNTY	ROUTE	KILOMETER POST TOTAL PROJECT	SHEET NO.	TOTAL SHEETS
04	SF	80		61	137

Caltrans Metric

REGISTERED ENGINEER - CIVIL

PLANS APPROVAL DATE

The State of California or its officers or agents shall not be responsible for the accuracy or completeness of electronic copies of this plan sheet.

REGISTERED PROFESSIONAL ENGINEER — A.L. ELY — No. 18880 — Exp. 6-30-07 — CIVIL — STATE OF CALIFORNIA

T.Y.LIN / MOFFATT & NICHOL
TWO HARRISON STREET
SAN FRANCISCO, CA 94105

TRANSITION STRUCTURES				
Location	Hazardous (Type H)		Hazardous Class II (Petroleum contamination)	
	D1 (m)	D2 (m)	D1 (m)	D2 (m)
WESTBOUND				
Bent W6L			10.0	14.0
Bent W5L			9.0	13.0
Bent W4L	0.0	0.6		
EASTBOUND				
Bent W6R(N)			10.0	14.0
Bent W6R(S)	0.0	0.6	10.0	14.0
Bent W5R	0.0	0.9	9.0	13.0
Bent W4R	0.0	0.6	7.0	11.0

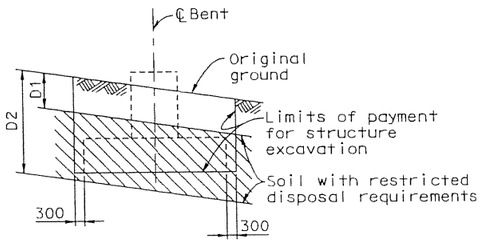

Note:
N - Indicates North footing
S - Indicates South footing

LIMITS OF PAYMENT FOR STRUCTURE EXCAVATION WITH RESTRICTED DISPOSAL

For details not shown see A62C
NO SCALE

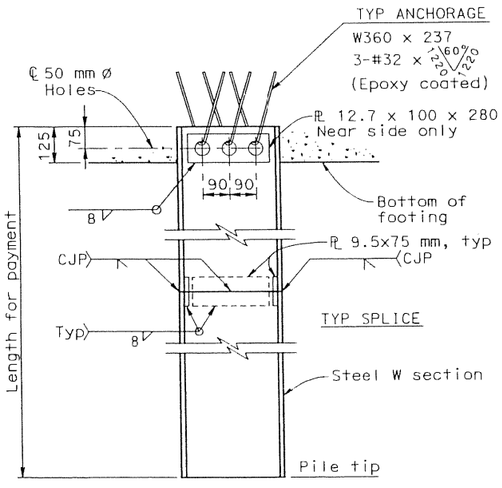

TYPICAL STEEL PILE DETAIL

1:10

TIEDOWN ANCHOR STRESSING NOTES:

T = 525 kN (Design force of anchor)

As = $\frac{1.5 \times T}{0.75\ Fpu}$

Bar = ASTM designation A722

Fpu = Ultimate tensile stress of prestressing steel bar = 1030 MPa

As = Minimum cross-sectional area of prestressing steel bar (mm2)

Lockoff force = 100% T

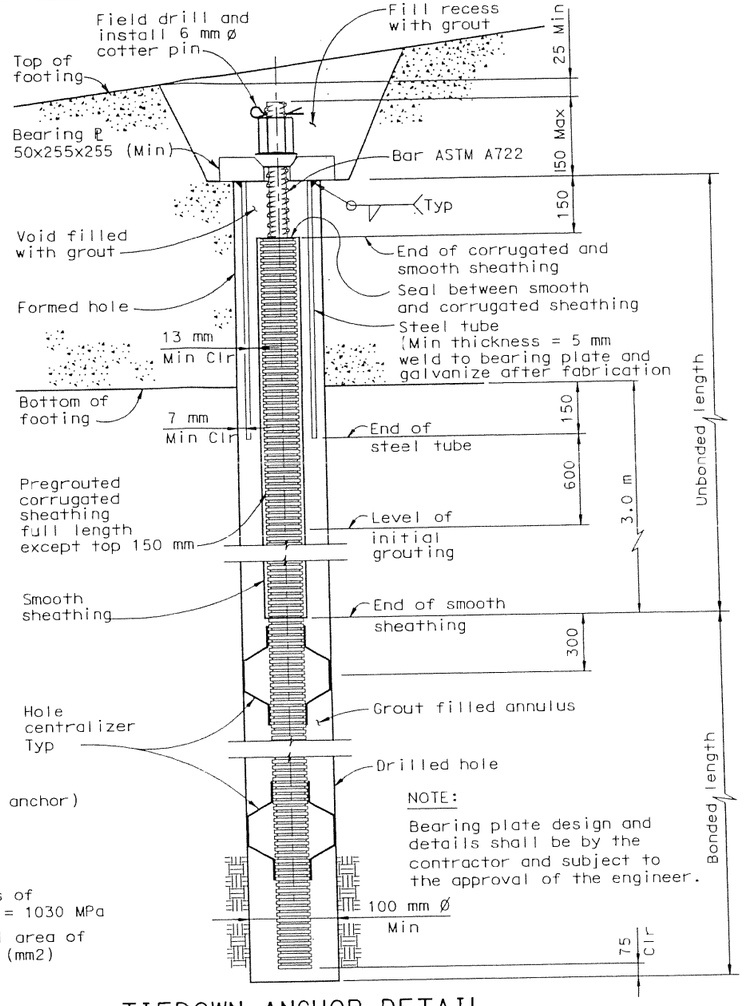

NOTE:
Bearing plate design and details shall be by the contractor and subject to the approval of the engineer.

TIEDOWN ANCHOR DETAIL

No scale

NOTES:

1. Concrete for CIDH piles shall have a minimum 28 day compressive strength (F'c) of 25 MPa
2. For hoop splice detail, see "Bent W6L Details No. 1" sheet.
3. ⊗ Indicates bundled bars

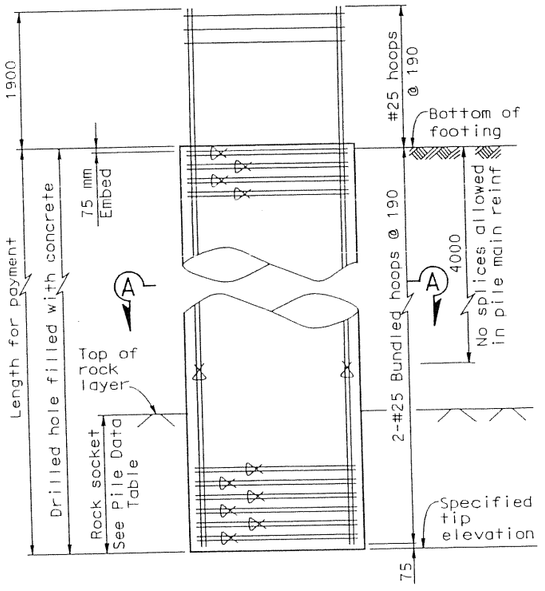

2400mm CIDH PILE DETAIL

1:40

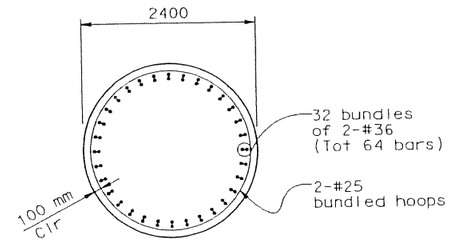

SECTION A-A

1:40

Contract No. 04-0120R4
SUPPLEMENTAL SHEET

CONTRACT CHANGE ORDER NO. 77
SHEET 5 OF 9

ALL DIMENSIONS ARE IN MILLIMETERS UNLESS OTHERWISE SHOWN

DESIGN OVERSIGHT
JOHN MOOK, BERNARD CHAN, JUAN F. CARPIO
SIGN OFF DATE

	BY	CHECKED
DESIGN	Desai	Jain
DETAILS	van Ryn/Zucchi/Mai	Jain
QUANTITIES	Liao	E. Nichol

PREPARED FOR THE STATE OF CALIFORNIA DEPARTMENT OF TRANSPORTATION

Jal Birdy
PROJECT ENGINEER

CU 04251
EA 0120S1

BRIDGE NO. 34-0006 L/R
KILOMETER POST 12.8

SAN FRANCISCO OAKLAND BAY BRIDGE
EAST SPAN SEISMIC SAFETY PROJECT

YBI TRANSITION STRUCTURES

ADVANCE CONST PACKAGE NO.1R2

PILE & TIEDOWN ANCHOR DETAILS

DISREGARD PRINTS BEARING EARLIER REVISION DATES →

REVISION DATES (PRELIMINARY STAGE ONLY): 11/24/06 | 11/27/06 | 11/29/06 | 3/28/02 | 5/28/02 | 2/24/03 | 3/2006 | 3/24/06 | 10/27/06 | 11/20/06

SHEET 5 OF 65

ORIGINAL SCALE IN MILLIMETERS FOR REDUCED PLANS 0 10 20 30 40 50 60 70 80 90 100

FILE => k:\4141-06\CADD\TS\Final Const\Adv Const Pkg 1R2\eepile.dgn

Rev. Date: 5-18-98

Nov 29, 2006

USERNAME => fsamson DATE PLOTTED => 11/29/2006 TIME PLOTTED => 3:22:28 PM

DIST.	COUNTY	ROUTE	KILOMETER POST TOTAL PROJECT	SHEET NO.	TOTAL SHEETS
04	SF	80		63	137

REGISTERED ENGINEER - CIVIL

PLANS APPROVAL DATE

REGISTERED PROFESSIONAL ENGINEER — A.L. ELY — No. 18880 — Exp. 6-30-07 — CIVIL — STATE OF CALIFORNIA

The State of California or its officers or agents shall not be responsible for the accuracy or completeness of electronic copies of this plan sheet.

T.Y. LIN / MOFFATT & NICHOL
TWO HARRISON STREET
SAN FRANCISCO, CA 94105

** Dimension shown is measured along ℄ bent

* Indicates structure depth top of deck to soffit at ℄ WB or EB Rte 80

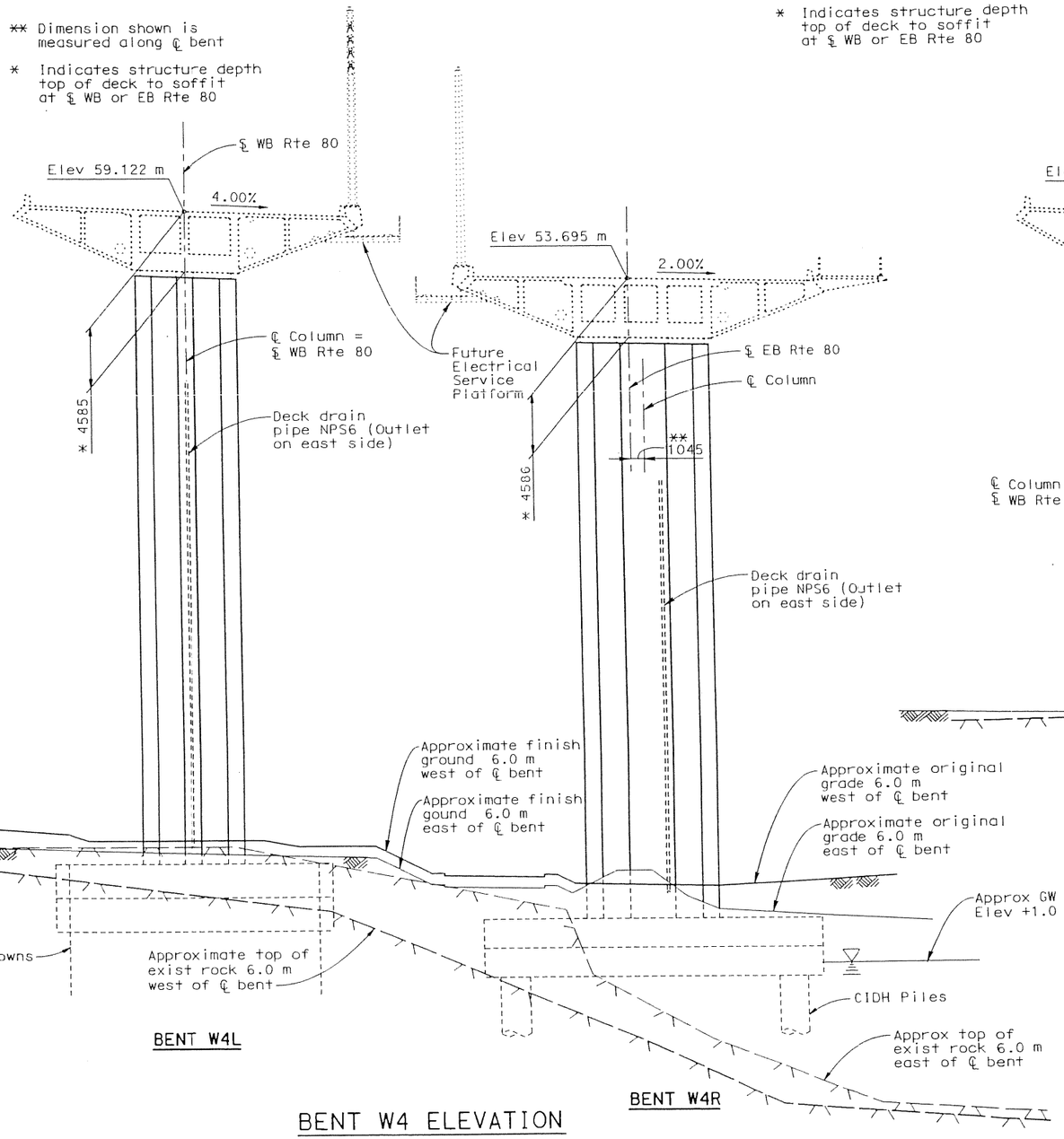

BENT W4 ELEVATION
1:200

** Dimension shown is measured along ℄ bent

* Indicates structure depth top of deck to soffit at ℄ WB or EB Rte 80

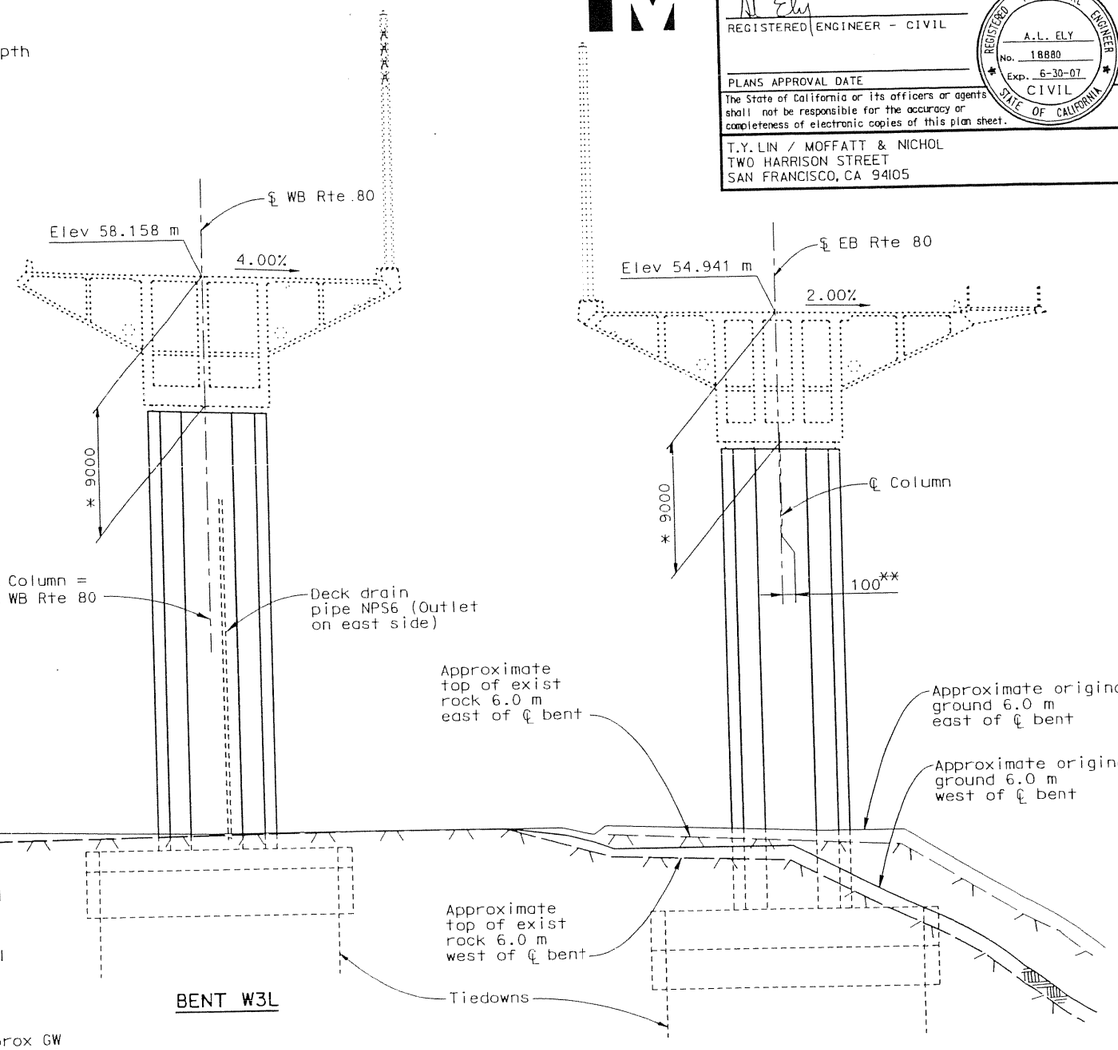

BENT W3 ELEVATION
1:200

Contract No. 04-0120R4
SUPPLEMENTAL SHEET

CONTRACT CHANGE ORDER NO. 77
SHEET 6 OF 9

ALL DIMENSIONS ARE IN MILLIMETERS UNLESS OTHERWISE SHOWN

SAN FRANCISCO OAKLAND BAY BRIDGE
EAST SPAN SEISMIC SAFETY PROJECT

YBI TRANSITION STRUCTURES

ADVANCE CONST PACKAGE NO.1R2

BENT ELEVATIONS W4 & W3

DESIGN OVERSIGHT
JOHN NOOK, BERNARD CHAN, JUAN F. CARPIO
SIGN OFF DATE

Rev. Date: 5-18-98

	BY	CHECKED
DESIGN	Desai	Jain
DETAILS	van Ryn/Zucchi/Mai	Jain
QUANTITIES	Liao	E. Nichol

PREPARED FOR THE STATE OF CALIFORNIA DEPARTMENT OF TRANSPORTATION

Jal Birdy
PROJECT ENGINEER

BRIDGE NO.	KILOMETER POST
34-0006 L/R	12.8

CU 04251
EA 012051

DISREGARD PRINTS BEARING EARLIER REVISION DATES →

REVISION DATES (PRELIMINARY STAGE ONLY): 11/24/06 | 11/27/06 | 11/29/06 | 3/28/07 | 5/30/07 | 2/24/05 | 3/2/06 | 8/25/06 | 10/27/06 | 11/29/06

SHEET 7 OF 65

ORIGINAL SCALE IN MILLIMETERS FOR REDUCED PLANS 0 10 20 30 40 50 60 70 80 90 100

FILE => k:\4141-06\CADD\TS\Final Const\Adv Const Pkg 1R2\eebnt06elv.dgn

Nov 29, 2006

USERNAME => fsamson DATE PLOTTED => 11/29/2006 TIME PLOTTED => 3:23:02 PM

DIST.	COUNTY	ROUTE	TOTAL PROJECT	NO.	SHEETS
04	SF	80		65	137

Caltrans Metric

REGISTERED ENGINEER - CIVIL

PLANS APPROVAL DATE

The State of California or its officers or agents shall not be responsible for the accuracy or completeness of electronic copies of this plan sheet.

REGISTERED PROFESSIONAL ENGINEER A.L. ELY No. 18880 Exp. 6-30-07 CIVIL STATE OF CALIFORNIA

T.Y. LIN / MOFFATT & NICHOL
TWO HARRISON STREET
SAN FRANCISCO, CA 94105

Note: Indicates bundled bars

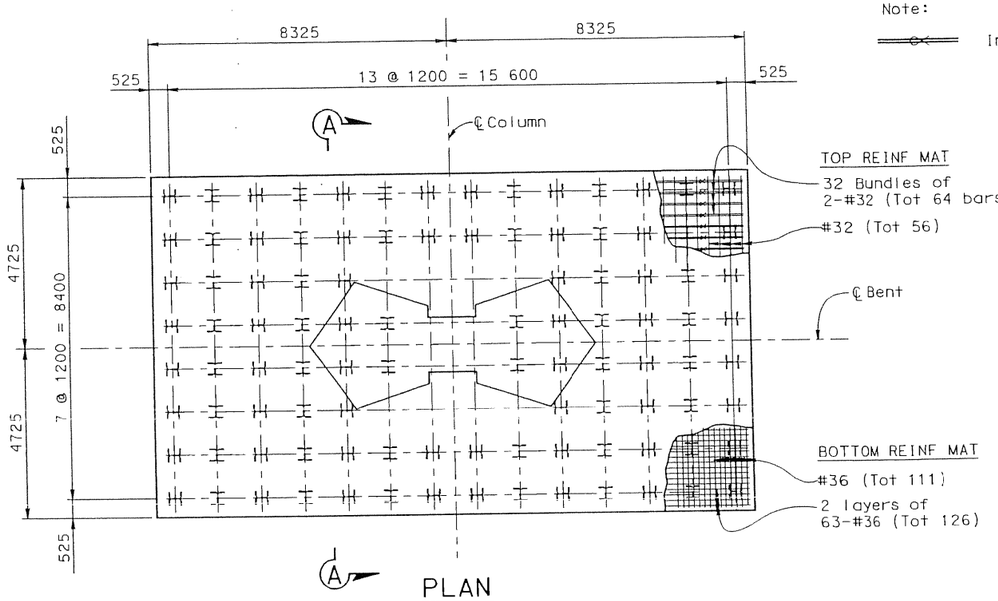

PLAN
(Tot 100 piles)
1:80

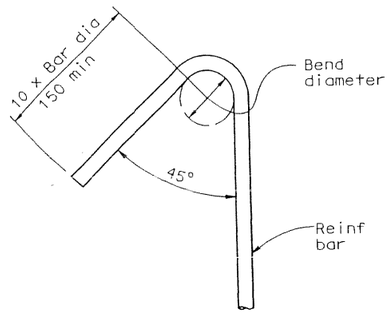

SEISMIC HOOK
No Scale

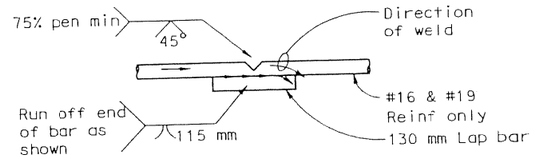

1. Butt weld to be made first
2. Butt weld to be made in flat or horizontal position
3. Lap bar to be centered on splice
4. Flare weld to be made in direction shown
5. Lap bar equal size to spiral bar

VEE GROOVE WELDED SPLICE

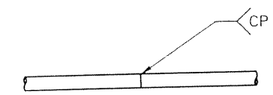

Individual hoops, made continuous with 100% pene-ration welds, may be substituted for spirals, Hoops shall be same size, spacing, and material as spiral

BUTT WELDED CONTINUOUS HOOP OR SPIRAL

Note: All column spiral and hoop splices shall be ultimate butt splices, see Special Provisions.

COLUMN SPIRAL AND HOOP SPLICE DETAILS
No Scale

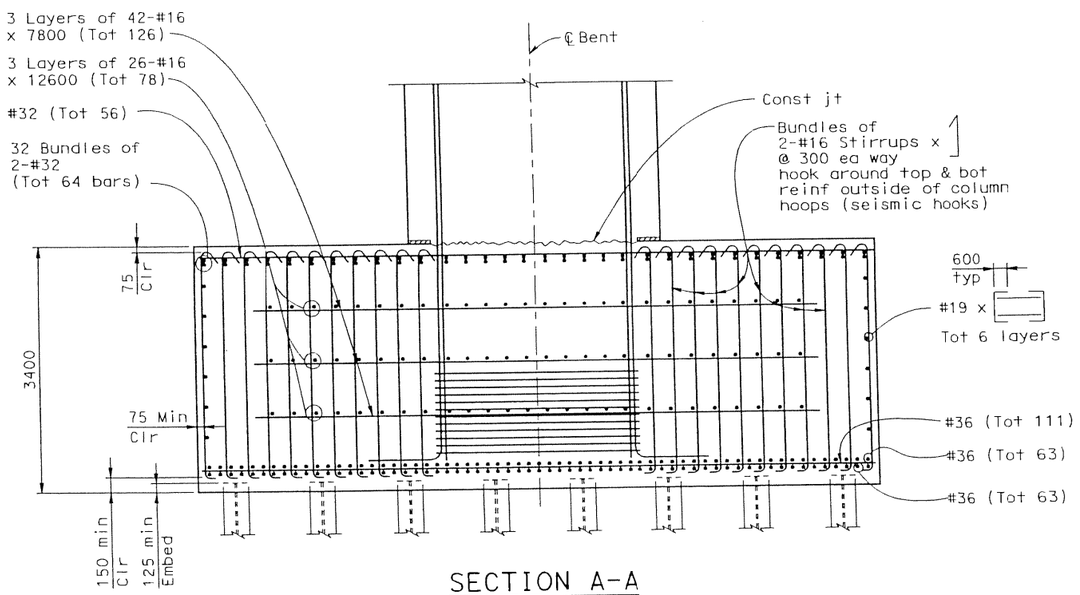

SECTION A-A
1:40

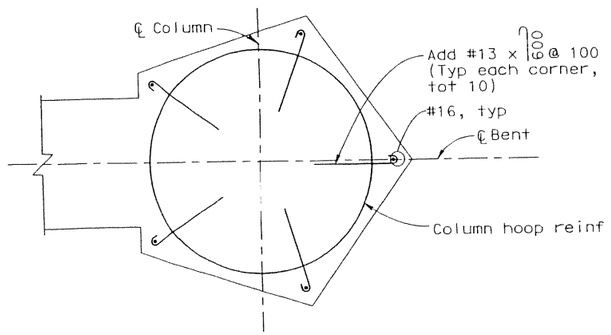

DETAIL B - COLUMN CORNER ANCHOR REINFORCEMENT
(Column corner anchor reinf to be provided in regions within 3000 mm of top of footing)
No Scale

Contract No. 04-0120R4
SUPPLEMENTAL SHEET

CONTRACT CHANGE ORDER NO. 77
SHEET 7 OF 9

ALL DIMENSIONS ARE IN MILLIMETERS UNLESS OTHERWISE SHOWN

SAN FRANCISCO OAKLAND BAY BRIDGE
EAST SPAN SEISMIC SAFETY PROJECT

YBI TRANSITION STRUCTURES

ADVANCE CONST PACKAGE NO.1R2

BENT W6L DETAILS NO.2

DESIGN OVERSIGHT
JOHN MOOK, BERNARD CHAN, JUAN F. CARPIO
SIGN OFF DATE

	BY	CHECKED
DESIGN	Dodd	Desai
DETAILS	van Ryn/Zucchi/Mai	Jain
QUANTITIES	Liao	E. Nichol

PREPARED FOR THE STATE OF CALIFORNIA DEPARTMENT OF TRANSPORTATION

Jal Birdy
PROJECT ENGINEER

BRIDGE NO. 34-0006 L/R
KILOMETER POST 12.8

CU 04251
EA 0120S1

DISREGARD PRINTS BEARING EARLIER REVISION DATES

REVISION DATES (PRELIMINARY STAGE ONLY) 11/14/06 11/27/06 11/29/06 3/26/02 5/18/02 2/14/03 1/3/06 8/15/06 10/31/06 11/28/06

SHEET 9 OF 65

ORIGINAL SCALE IN MILLIMETERS FOR REDUCED PLANS 0 10 20 30 40 50 60 70 80 90 100

FILE => k:\4141-06\CADD\TS\Final Const\Adv Const Pkg 1R2\eebnt21det.dgn

Rev. Date: 5-18-98

Nov 29, 2006

USERNAME => fsamson DATE PLOTTED => 11/29/2006 TIME PLOTTED => 3:23:28 PM

DIST.	COUNTY	ROUTE	KILOMETER POST TOTAL PROJECT	SHEET NO.	TOTAL SHEETS
04	SF	80		68	137

Caltrans Metric

REGISTERED ENGINEER - CIVIL

PLANS APPROVAL DATE

The State of California or its officers or agents shall not be responsible for the accuracy or completeness of electronic copies of this plan sheet.

REGISTERED PROFESSIONAL ENGINEER A.L. ELY No. 18880 Exp. 6-30-07 CIVIL STATE OF CALIFORNIA

T.Y. LIN / MOFFATT & NICHOL
TWO HARRISON STREET
SAN FRANCISCO, CA 94105

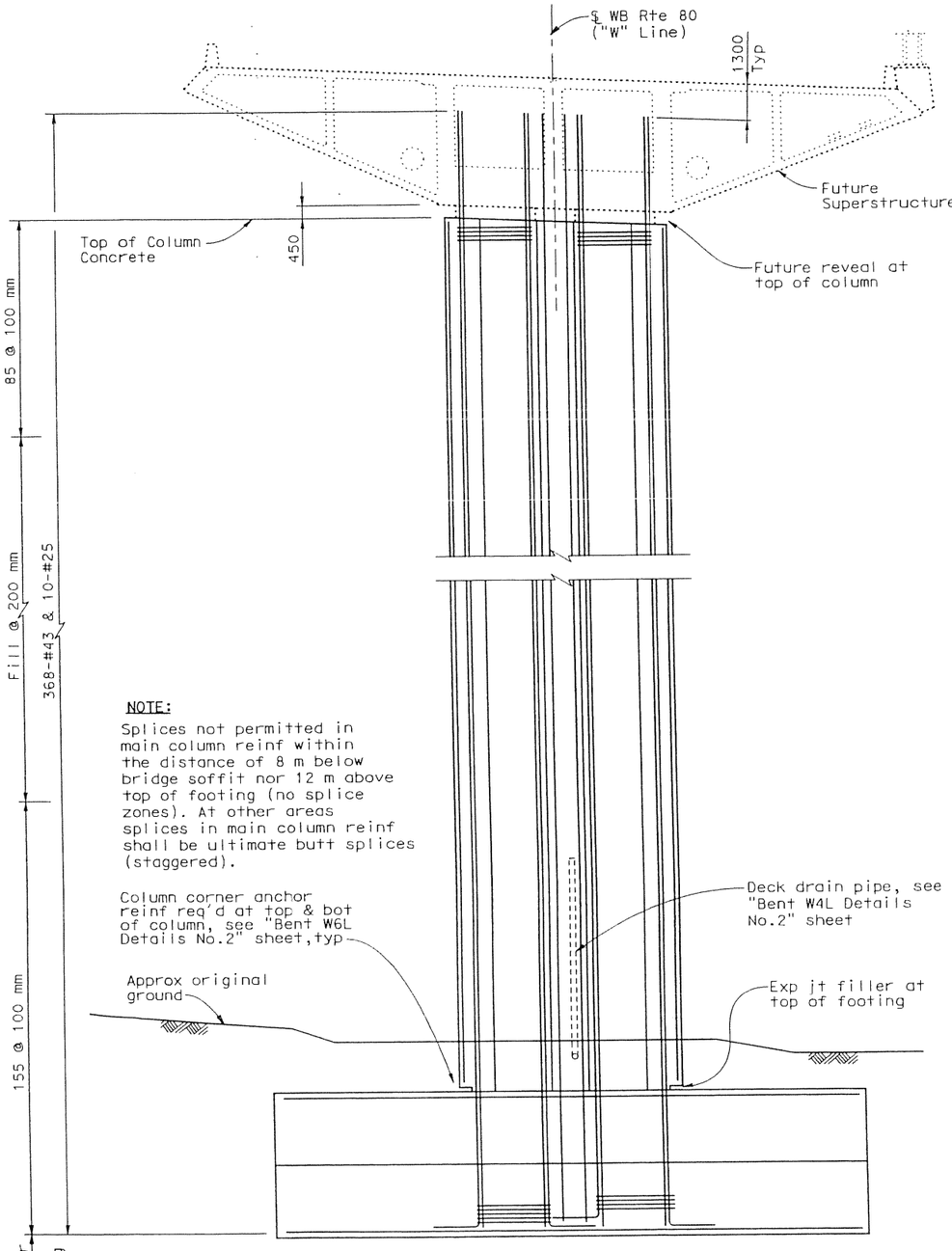

NOTE:
Splices not permitted in main column reinf within the distance of 8 m below bridge soffit nor 12 m above top of footing (no splice zones). At other areas splices in main column reinf shall be ultimate butt splices (staggered).

ELEVATION
1:100

NOTE:
Tiedowns not shown.

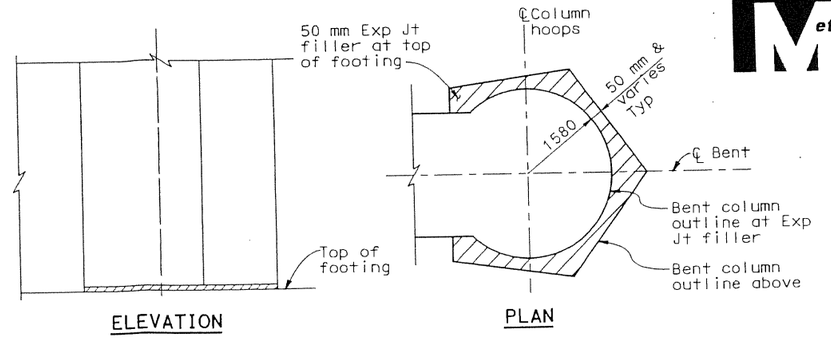

ELEVATION PLAN

EXPANSION JOINT FILLER AT TOP OF FOOTING
NO SCALE

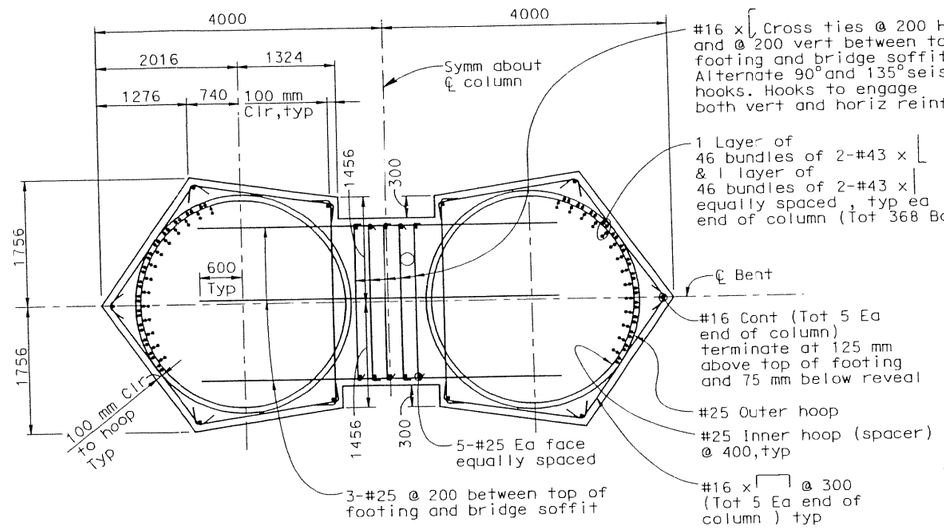

TYPICAL COLUMN SECTION
1:40

Contract No. 04-012024

SUPPLEMENTAL SHEET

CONTRACT CHANGE ORDER NO. 77
SHEET 8 OF 9

ALL DIMENSIONS ARE IN MILLIMETERS UNLESS OTHERWISE SHOWN

SAN FRANCISCO OAKLAND BAY BRIDGE
EAST SPAN SEISMIC SAFETY PROJECT

YBI TRANSITION STRUCTURES

ADVANCE CONST PACKAGE NO.1R2

BENT W4L DETAILS NO.1

DESIGN OVERSIGHT
JOHN MOOK, BERNARD CHAN, JUAN F. CARPIO
SIGN OFF DATE

	BY	CHECKED
DESIGN	Darrah/Shangkuan	Ahn
DETAILS	van Ryn/Zucchi/Mai	Jain
QUANTITIES	Liao	E. Nichol

PREPARED FOR THE STATE OF CALIFORNIA DEPARTMENT OF TRANSPORTATION

Jal Birdy
PROJECT ENGINEER

BRIDGE NO. 34-0006 L/R
KILOMETER POST 12.8

CU 04251
EA 012051

DISREGARD PRINTS BEARING EARLIER REVISION DATES

REVISION DATES (PRELIMINARY STAGE ONLY) 11/14/06 11/27/06 11/29/06 3/26/02 5/30/02 2/14/03 7/3/06 8/14/06 10/31/06 11/30/06

SHEET 12 OF 65

Rev. Date: 5-18-98

ORIGINAL SCALE IN MILLIMETERS FOR REDUCED PLANS 0 10 20 30 40 50 60 70 80 90 100

FILE => K:\4141-06\CADD\TS\Final Const\Adv Const Pkg 1R2\eebnt25det.dgn

Nov 29, 2006

USERNAME => fsamson DATE PLOTTED => 11/29/2006 TIME PLOTTED => 3:24:04 PM

DIST.	COUNTY	ROUTE	TOTAL PROJECT	NO.	SHEETS
04	SF	80		69	137

Caltrans Metric

REGISTERED ENGINEER - CIVIL

PLANS APPROVAL DATE

The State of California or its officers or agents shall not be responsible for the accuracy or completeness of electronic copies of this plan sheet.

REGISTERED PROFESSIONAL ENGINEER A.L. ELY No. 18880 Exp. 6-30-07 CIVIL STATE OF CALIFORNIA

T.Y. LIN / MOFFATT & NICHOL
TWO HARRISON STREET
SAN FRANCISCO, CA 94105

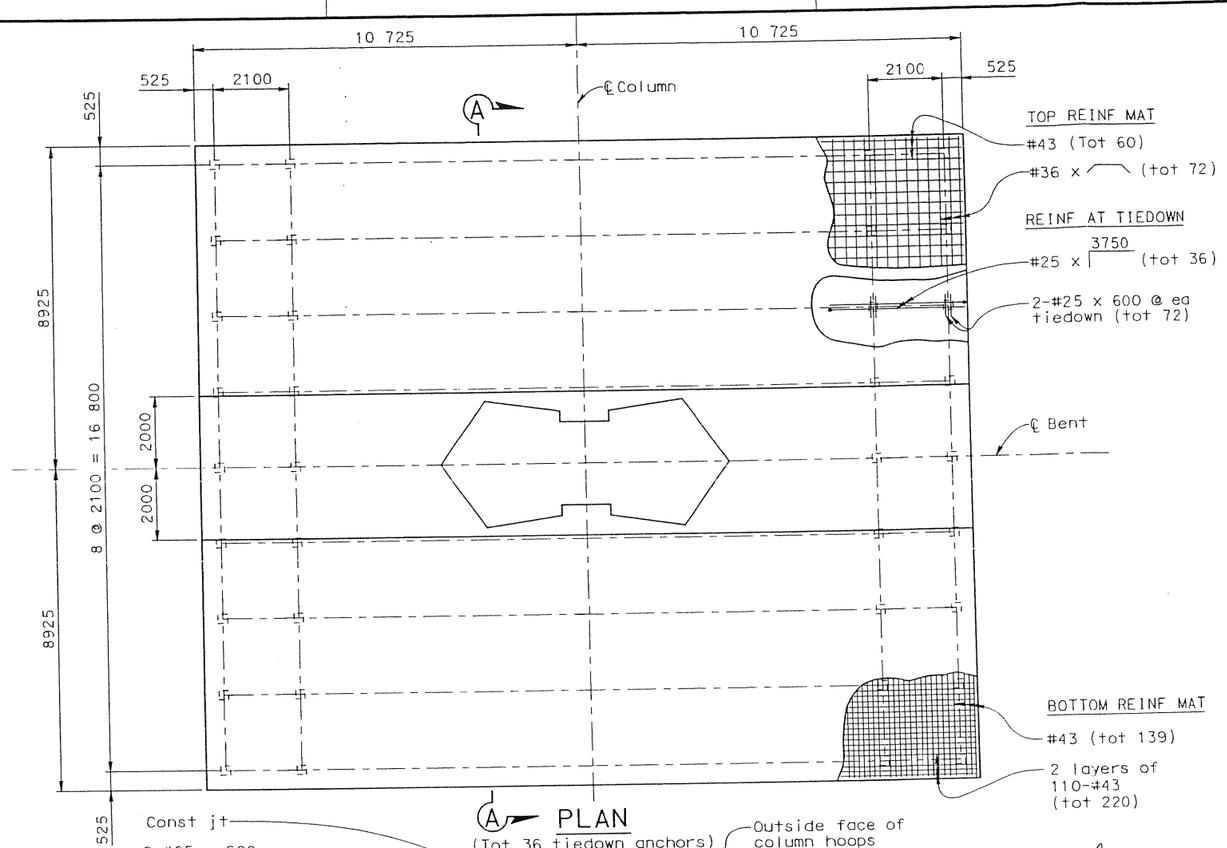

PLAN
(Tot 36 tiedown anchors)
1:80

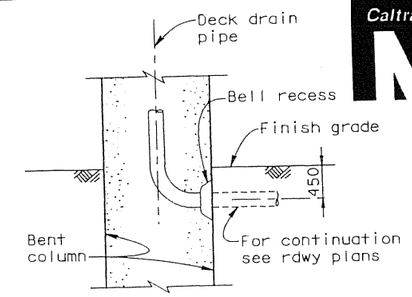

SECTION AT COLUMN

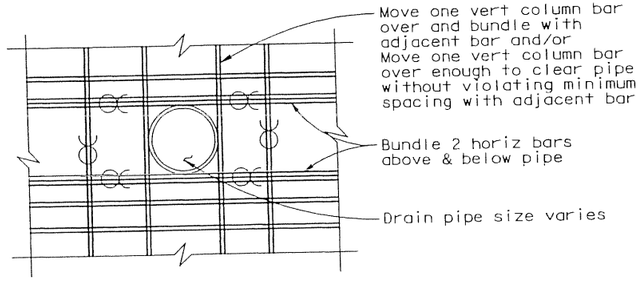

PART ELEVATION

DECK DRAIN PIPE OUTLET AT COLUMNS
(For details not shown see B7-6)
No Scale

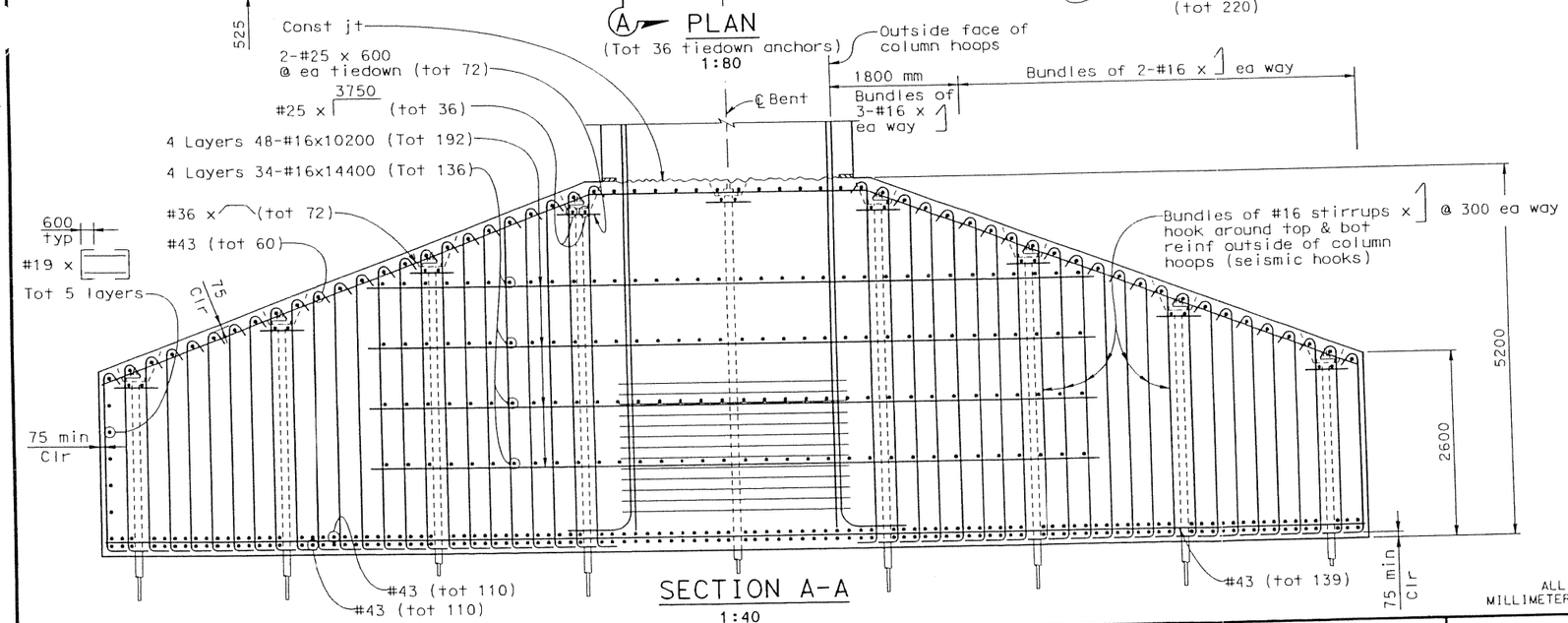

SECTION A-A
1:40

Contract No. 04-0120R4
SUPPLEMENTAL SHEET

CONTRACT CHANGE ORDER NO. 77
SHEET 9 OF 9

ALL DIMENSIONS ARE IN MILLIMETERS UNLESS OTHERWISE SHOWN

SAN FRANCISCO OAKLAND BAY BRIDGE
EAST SPAN SEISMIC SAFETY PROJECT

YBI TRANSITION STRUCTURES

ADVANCE CONST PACKAGE NO.1R2

BENT W4L DETAILS NO.2

DESIGN OVERSIGHT
JOHN MOOK, BERNARD CHAN, JUAN F. CARPIO
SIGN OFF DATE

	BY	CHECKED
DESIGN	Dodd	Desai
DETAILS	van Ryn/Zucchi/Mai	Jain
QUANTITIES	Liao	E. Nichol

PREPARED FOR THE STATE OF CALIFORNIA DEPARTMENT OF TRANSPORTATION

Jal Birdy
PROJECT ENGINEER

BRIDGE NO. 34-0006 L/R
KILOMETER POST 12.8

CU 04251
EA 0120S1

DISREGARD PRINTS BEARING EARLIER REVISION DATES

REVISION DATES (PRELIMINARY STAGE ONLY) 11/14/06 11/27/06 11/29/06 3/26/02 5/18/02 2/14/03 1/3/06 8/16/06 10/31/06 11/30/06

SHEET 13 OF 65

Rev. Date: 5-18-98

ORIGINAL SCALE IN MILLIMETERS FOR REDUCED PLANS 0 10 20 30 40 50 60 70 80 90 100

FILE => k:\4141-06\CADD\TS\Final Const\Adv Const Pkg 1R2\eebnt27det.dgn

Nov 29, 2006

USERNAME => fsamson DATE PLOTTED => 11/29/2006 TIME PLOTTED => 3:24:16 PM

STATE OF CALIFORNIA - DEPARTMENT OF TRANSPORTATION

CONTRACT CHANGE ORDER MEMORANDUM

DATE: 7/6/2007 RECEIVED

TO: MIKE FORNER / DENNIS TURCHON	FILE: **E.A.** 04 - 0120R4
FROM: MAHANTESH ANIGOL	**CO-RTE-PM** SF-80-12.6/13.2 006284 AUG -8 6
	FED. NO. ACBRIM-080-1(097)N
CCO#: **77** SUPPLEMENT#: **0** Category Code: **BZZZ**	CONTINGENCY BALANCE (incl. this change) **$4,530,170.67**
COST: **$7,125,000.00** INCREASE ☑ DECREASE ☐	HEADQUARTERS APPROVAL REQUIRED? ☑ YES ☐ NO
SUPPLEMENTAL FUNDS PROVIDED: **$0.00**	IS THIS REQUEST IN ACCORDANCE WITH ENVIRONMENTAL DOCUMENTS? ☑ YES ☐ NO
CCO DESCRIPTION: YBITS Adv. Work - W4L Footing	**PROJECT DESCRIPTION:** CONSTRUCT ROUTE 80 TEMP BYPASS STRUCTURE

Original Contract Time:	Time Adj. This Change:	Previously Approved CCO Time Adjustments:	Percentage Time Adjusted: (including this change)	Total # of Unreconciled Deferred Time CCO(s): (including this change)
475 Day(s)	**DEF** Day(s)	**381** Day(s)	**80** %	**8**

THIS CHANGE ORDER PROVIDES FOR:

Construction of the foundation and column at Bents W4L for the Yerba Buena Island Transition Structure (YBITS), Bridge No. 34-0006L.

To mitigate the potential of having more than one contractor occupying the same work area and to meet the goal of achieving seismic safety portions of the YBITS are to be advanced on this project. Completion of this advance work will help mitigate future corridor schedule risks related to foundation construction which includes but is not limited to buried man made objects, differing site conditions, and hazardous materials. This advanced work is in accordance with the approved document titled "Recommendation to Construct Select Yerba Buena Island Transition Structure Foundations by Contract Change Order" dated December 25, 2006 and the May 2006 TBPOC decision to add foundation work for the YBITS to the SSD contract by change order. Future change orders will be issued for the construction of the remaining YBITS advanced work.

Payment for this work will be at Extra Work at Agreed Lump Sum Price of $7,125,000.00, which can be financed from the contingency fund, except for the following items:

1) Compensation for all additional SWPPP work associated with this change shall be compensated for separately.
2) Time related costs and impacts as a result of this change shall be compensated for under separate change order.

Supporting documents and information for this change including a cost analysis are on file with the project records.

Adjustment of contract time is deferred pending completion of the work specified in this change as it may affect or become the controlling operation.

This change order was requested by Mike Whiteside – YBI Coordination Engineer per memorandum dated November 28, 2006. Robert Kobal - Caltrans' HQ Assistant Construction Coordinator, Brian Maroney - Deputy Toll Bridge Program Manager, Ken Terpstra - Project Manager, Bill Zanetich - Office Chief Structures Maintenance, and Trinh Lai - Project Engineer are in concurrence with this change. Caltrans' HQ CCO ATP request sent on 6/7/07, approval received on 6/8/07.

Approval of this change order is recommended by the Resident Engineer.

ADA Notice: For individuals with sensory disabilities, this document is available in alternate formats. For information call: (916) 654-6410 or TDD (916) 654-3880 or write Records and Forms Management, 1120 N Street, MS-89, Sacramento, CA 95814.

CONCURRED BY:		
Construction Engineer:	Mahantesh Anigol	Date 7/16/07
Bridge Engineer:	Bill Casey, Struct. Rep.	Date 7/20/07
Project Engineer:	Trinh Lai	Date 6/7/07
Project Manager:	Ken Terpstra	Date 6/8/07
FHWA Rep.:		Date
Environmental:		Date
Other (specify):	Mike Whiteside, YBI Coord. Engr.	Date 11/28/06
Other (specify):	Rober Kobal, HQ Asst. Constr. Co	Date 7/13/07
District Prior Approval By:		Date
HQ (Issue Approve) By:	Ken Darby, HQ CCO Reviewer	Date 7/18/07
Resident Engineer's Signature:		Date
M. U. Anigol		7/16/07

ESTIMATE OF COST

	THIS REQUEST	TOTAL TO DATE
ITEMS	$0.00	$0.00
FORCE ACCOUNT	$0.00	$0.00
AGREED PRICE	$7,125,000.00	$7,125,000.00
ADJUSTMENT	$0.00	$0.00
TOTAL	$7,125,000.00	$7,125,000.00

FEDERAL PARTICIPATION

☐ PARTICIPATING ☐ PARTICIPATING IN PART ☑ NONE
☐ NON-PARTICIPATING (MAINTENANCE) ☐ NON-PARTICIPATING

FEDERAL SEGREGATION (if more than one Funding Source or P.I.P. type)
☑ CCO FUNDED PER CONTRACT ☐ CCO FUNDED AS FOLLOWS

FEDERAL FUNDING SOURCE PERCENT

ADA Notice: For individuals with sensory disabilities, this document is available in alternate formats. For information call: (916) 654-6410 or TDD (916) 654-3880 or write Records and Forms Management, 1120 N Street, MS-89, Sacramento, CA 95814.

STATE OF CALIFORNIA - DEPARTMENT OF TRANSPORTATION

CONTRACT CHANGE ORDER

Change Requested by: Engineer

CCO 78	Suppl. No. 0	Contract No. 04 - 0120R4	Road SF-80-12.6/13.2	FED. AID LOC.: ACBRIM-080-1(097)N

To: **CC MYERS INC**

You are directed to make the following changes from the plans and specifications or do the following described work not included in the plans and specifications for this contract. ***NOTE: This change order is not effective until approved by the Engineer.***

Description of work to be done, estimate of quantities and prices to be paid. (Segregate between additional work at contract price, agreed price and force account.) Unless otherwise stated, rates for rental of equipment cover only such time as equipment is actually used and no allowance will be made for idle time. This last percentage shown is the net accumulated increase or decrease from the original quantity in the Engineer's Estimate.

Extra Work at Lump Sum:

Relocate the 150mm Ductile Iron Pipe Sewer as shown on the attached plans and specifications, and abandon/remove the existing line as required for construction of the footings at W4 Right and Left of the Yerba Buena Island Transition Structure (Br. No. 34-0006). It is anticipated that other utilities will be encountered during this work, the additional costs associated with potholing, any required alignment shifts, and any repairs required if an existing utility is damaged have been included in this agreed lump sum.

For this work, the Contractor will be compensated $125,057.00. This sum constitutes full compensation including markups for furnishing all labor, material, tools, equipment, and incidentals for doing the work involved in this change.

It is not anticipated that traffic control or temporary k-railing will be required as a result of this change, however, if found to be required, the contractor will be compensated under Contract Change Order No. 1.

Total Cost of Extra Work at Lump Sum $125,057.00

RECEIVED
JUN 25 2007
05637

Estimated Cost: Increase ☑ Decrease ☐ **$125,057.00**

By reason of this order the time of completion will be adjusted as follows: 0 days

Submitted by

Signature	Resident Engineer	Date
M U Anigol	MAHANTESH ANIGOL	5/25/07

Approval Recommended by

Signature	Area Construction Manager	Date
	JASON TOM	5/25/07

Engineer Approval by

Signature	Area Construction Manager	Date
	JASON TOM	6/13/07

We the undersigned contractor, have given careful consideration to the change proposed and agree, if this proposal is approved, that we will provide all equipment, furnish the materials, except as may otherwise be noted above, and perform all services necessary for the work above specified, and will accept as full payment therefor the prices shown above.

NOTE: If you, the contractor, do not sign acceptance of this order, your attention is directed to the requirements of the specifications as to proceeding with the ordered work and filing a written protest within the time therein specified.

Contractor Acceptance by

Signature	(Print name and title)	Date
Dewey C. Lee, Jr.	DEWEY C. LEE JR. Contract Manager	6/19/07

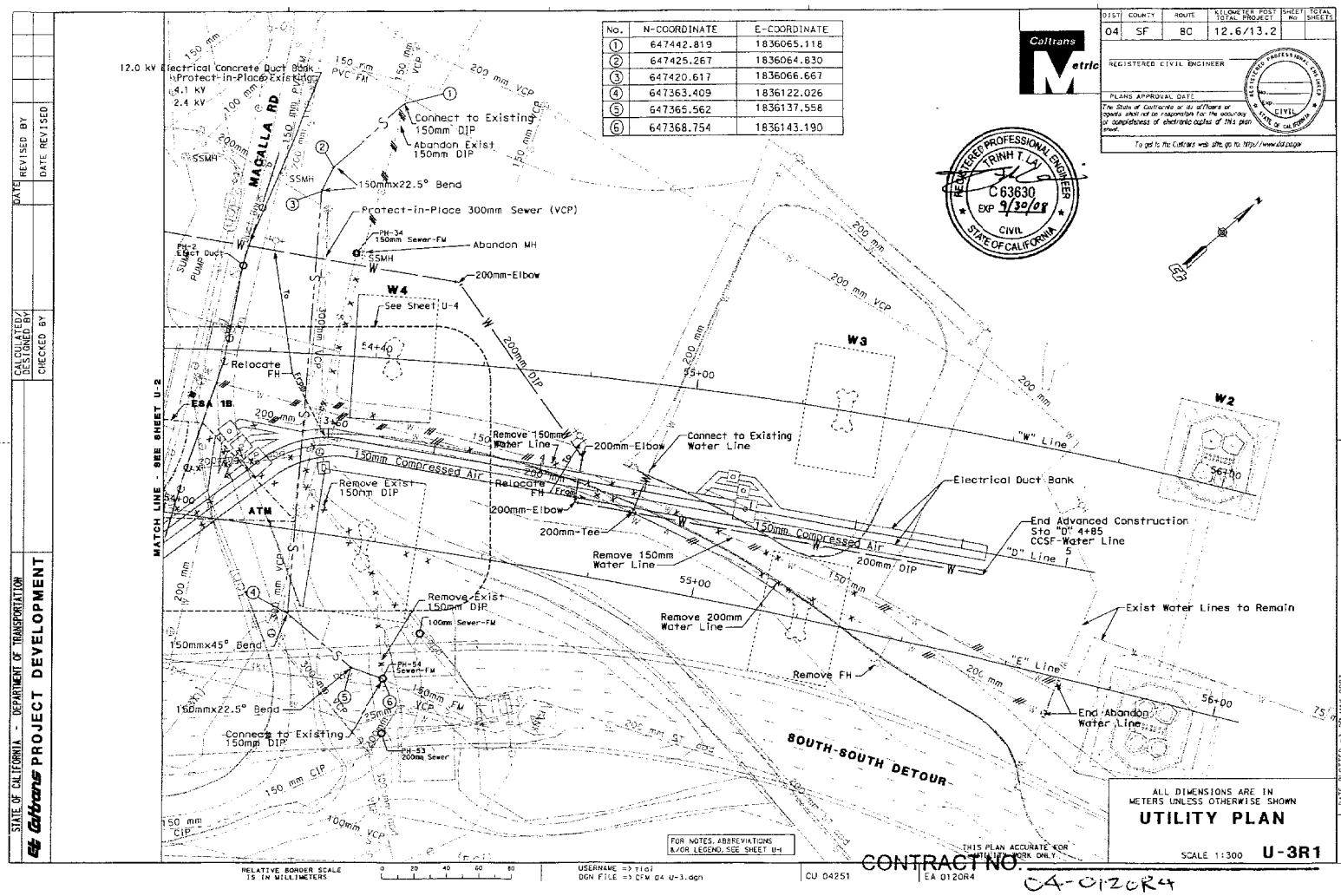

No.	N-COORDINATE	E-COORDINATE
1	647442.819	1836065.118
2	647425.267	1836064.830
3	647420.617	1836066.667
4	647363.409	1836122.026
5	647365.562	1836137.558
6	647368.754	1836143.190

DIST	COUNTY	ROUTE	KILOMETER POST TOTAL PROJECT	SHEET No.	TOTAL SHEETS
04	SF	80	12.6/13.2		

REGISTERED CIVIL ENGINEER

PLANS APPROVAL DATE

The State of California or its officers or agents shall not be responsible for the accuracy or completeness of electronic copies of this plan sheet.

To get to the Caltrans web site, go to: http://www.dot.ca.gov

REGISTERED PROFESSIONAL ENGINEER TRINH T. LAI C 63630 EXP 9/30/08 CIVIL STATE OF CALIFORNIA

STATE OF CALIFORNIA - DEPARTMENT OF TRANSPORTATION
Caltrans PROJECT DEVELOPMENT

DATE REVISED BY | DATE REVISED
CALCULATED/DESIGNED BY
CHECKED BY

FOR NOTES, ABBREVIATIONS &/OR LEGEND, SEE SHEET U-1

THIS PLAN ACCURATE FOR INITIAL WORK ONLY

ALL DIMENSIONS ARE IN METERS UNLESS OTHERWISE SHOWN

UTILITY PLAN

SCALE 1:300 U-3R1

RELATIVE BORDER SCALE IS IN MILLIMETERS 0 20 40 60 80

USERNAME => tlai
DGN FILE => CFM 04 U-3.dgn

CU 04251 EA 0120R4

DATE PLOTTED => 28-MAR-2007
TIME PLOTTED => 10:11
LAST REVISION 05-22-07 11:46

CONTRACT NO. 04-0120R4

CONTRACT CHANGE ORDER NO 78

SHEET 4 OF 17

DIST	COUNTY	ROUTE	KILOMETER POST TOTAL PROJECT	SHEET NO	TOTAL SHEETS
04	SF	80	12.6/13.2		

Caltrans Metric

REGISTERED CIVIL ENGINEER

PLANS APPROVAL DATE

The State of California or its officers or agents shall not be responsible for the accuracy or completeness of electronic copies of this plan sheet.

To get to the Caltrans web site, go to http://www.dot.ca.gov

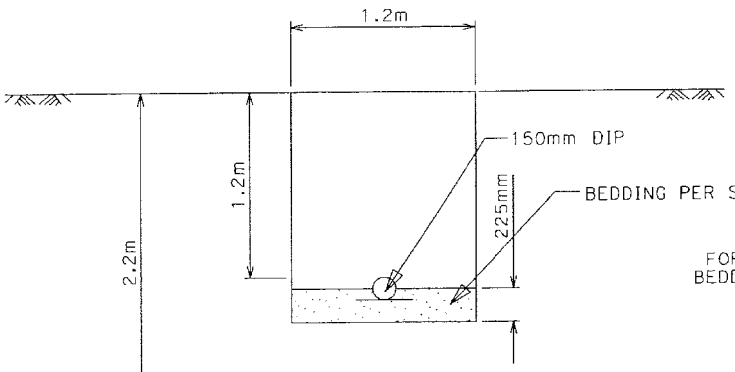

TRENCH DETAIL

NO SCALE

REGISTERED PROFESSIONAL ENGINEER
TRINH T. LAI
C 63630
Exp 9/30/08
CIVIL
STATE OF CALIFORNIA

CONTRACT NO. 04-0120R4

CONTRACT CHANGE ORDER NO 78

SHEET 3 OF 12

ALL DIMENSIONS ARE IN METERS UNLESS OTHERWISE SHOWN

UTILITY PLAN

U-3A

STATE OF CALIFORNIA - DEPARTMENT OF TRANSPORTATION
Caltrans PROJECT DEVELOPMENT

PROJECT ENGINEER: T. T. LAI

CALCULATED/DESIGNED BY

CHECKED BY

DATE REVISED | REVISED BY

FOR NOTES, ABBREVIATIONS &/OR LEGEND, SEE SHEET U-1

THIS PLAN ACCURATE FOR UTILITY WORK ONLY

RELATIVE BORDER SCALE IS IN MILLIMETERS 0 20 40 60 80

USERNAME => tlai
DGN FILE => C:\FN_Trenchdetail.dgn

CU 04251

EA 0120R4

DATE PLOTTED => 25-MAY-2007
TIME PLOTTED => 11:16

LAST REVISION 05-09-07

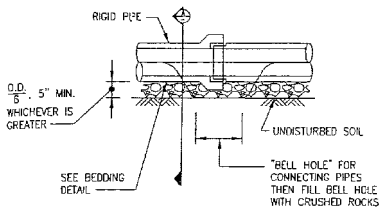

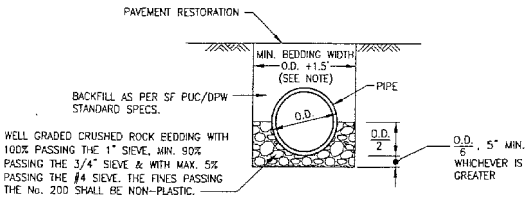

SECTION A-A

NO SCALE

BEDDING DETAIL

NO SCALE

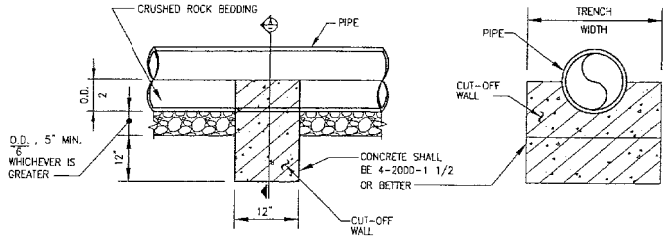

SECTION A-A

NO SCALE

CUT-OFF WALL DETAIL

NO SCALE

NOTES

1. MAXIMUM TRENCH WIDTH SHALL BE THE LARGER OUTSIDE DIMENSION OF THE NEW OR EXISTING SEWER/STRUCTURE PLUS 3 FEET.
2. ALL NEW VCP AND RCP MAIN SEWERS SHALL BE CONSTRUCTED ON CRUSHED ROCK BEDDING AS SHOWN ON BEDDING DETAIL UNLESS OTHERWISE NOTED.

CONTRACT NO. 04-0120R4

CONTRACT CHANGE ORDER NO 78

SHEET 4 OF 12

CITY AND COUNTY OF SAN FRANCISCO
DEPARTMENT OF PUBLIC WORKS
BUREAU OF ENGINEERING

BUREAU MANAGER	DESIGNED F.SHEK	7/03
DEPUTY MANAGER	DRAWN F.Y.LAW	7/03
CITY ENGINEER	CHECKED K.SIN	7/03

NO.	DATE	DESCRIPTION	BY	APP'D
REVISIONS				

CITY AND COUNTY OF SAN FRANCISCO
PUBLIC UTILITIES COMMISSION
UTILITIES ENGINEERING BUREAU

STANDARD PLAN

DETAILS FOR PIPE INSTALLATION, BEDDING AND CUT-OFF WALL

SYSTEM MANAGER	CHECKED	SCALE	AS NOTED
SYSTEM MANAGER	RECOMMENDED	MANAGER	DATE

APPROVED

APPROVED

SHEET OF C-1.20

NUMBER: 07977

FOR REDUCED PLANS ORIGINAL SCALE IS IN INCHES 0 1 2 3 4

Drawing Path: W:\07977_UPDATE_STANDARD_SPECIFICATIONS\SV Design\Working Drawings\STD\C-1.20.dwg Layout: TONER(Dimension Scale: 40 Model Units: Feet
Plot Time: Thu, 18 Dec 2003 - 9:12am Measurement Units are English

PART 2 - PRODUCTS

Not Used

PART 3 - EXCAVATION

See Above

CONTRACT NO. 04-0120R4

CONTRACT CHANGE ORDER NO 78

SHEET 5 OF 12

PART 1 – GENERAL

1.01- DESCRIPTION

A. Work Included:

1. This section includes specifications for excavating, backfilling, preparation of subgrade, detwatering, compacting, grading, finishing, hauling, and all incidentals in connection with earthwork.

2. The disposal of surplus excavated materials shall be as specified in Article 3.11.

3. Work incidental to the excavation work for which no direct payment will be made, includes constructing temporary fences, maintaining existing roads, maintaining protective devices to safeguard the public, providing detours as necessary, protecting sub-surface utilities and structures, taking care of ground water and draining of the work area, removing and replacing or relocating utilities as required, and doing all other work necessary and proper for the prosecution and completion of the work under this Section.

4. The design of trench and excavation support systems is the Contractor's responsibility and no separate payment will be made therefore.

B. Classification of Excavation Materials:

For the purpose of payment, no distinction will be made between earth, rock, pavement, sidewalks, structures, or other materials removed under excavation work.

1.02- REFERENCES CITED

A. ASTM D-1557-Test Methods for Moisture-Density Relations of Soils and Soil Aggregate Mixtures using 10-lb (4.54 kg) Rammer and 18-inch (457 mm) Drop.

B. ANSI/ASTM D698- Test Methods for Moisture-Density Relations of Soils and Soil Aggregate Mixtures using 5.5 pound (2.49 kg) Rammer and 12 inch (304.8 mm) Drop.

C. ANSI/ASTM C136- Methods for Sieve Analysis of Fine and Coarse Aggregates.

D. California Labor Code Section 6705 and 6707- Excavation five (5) feet or more in depth.

E. DPW Standard Specifications (1986)- Section 702-Trench Excavation

F. DPW Order No. 171,442-"Regulations for Excavating and Restoring Streets in San Francisco."

G. California Occupational Safety and Health Administration (CAL/OSHA), State of California Code of Regulations, Title 8-Industrial Relations, Chapter4-Division of Industrial Safety.

1.03- DEFINITIONS

A. Backfill: Soil material used to fill an excavation.

1. Initial backfill: Backfill placed beside and over pipe in a trench, including haunches to support sides of pipe.

2. Final backfill: Backfill placed over initial backfill to fill a trench.

C. Base Course: Course placed between the subbase course and hot-mix asphalt paving.

D. Bedding Course: Course placed over the excavated subgrade in a trench before laying pipe.

E. Borrow Soil: Satisfactory soil imported from off-site for use as fill or backfill.

F. Drainage Course/ Capillary Water Barrier: Course supporting the slab-on-grade that also minimizes upward capillary flow of pore water.

G. Excavation: Removal of material encountered above subgrade elevations and to lines and dimensions indicated.

1. Authorized Additional Excavation: Excavation below subgrade elevations or beyond indicated lines and dimensions as directed. Authorized additional excavation and replacement material will be paid for according to Contract provision changes in the work.

2. Bulk Excavation: Excavation more than 10 feet (3 m) in width and more than 30 feet (9 m) in length.

3. Unauthorized Excavation: Excavation below subgrade elevations or beyond indicated lines and dimensions without direction. Unauthorized excavation, as well as remedial work as directed, shall be without additional compensation.

H. Fill: Soil materials used to raise existing grades.

I. Rock: Rock material in beds, ledges, unstratified masses, conglomerate deposits, and boulders of rock material that exceed 1 cu. Yd. (0.76 cu.m) for bulk excavation or ¾ cu.yd. (0.57 cu.m) for footing, trench, and pit excavation that cannot be removed by rock excavating equipment equivalent to the following in size and performance ratings, without systematic drilling, ram, hammering, ripping, or blasting, when permitted:

1. Excavation of footings, trenches, and pits: late-model, track-mounted hydraulic excavator; equipped with a 42-inch-(1065-mm-) wide, maximum, short tip radius rock bucket; rated at not less than 138-hp (103-kw) flywheel power with bucket-curling force of not less than 28,090 lbf (125kN) and stick-crowd force of not less than 18,650 lbf (83 kN); measured according to SAE J-1179. Ratings are based on Catepillar's "Model No. 320CL."

2. Bulk Excavation: Late-model, track-mounted loader; rated at not less than 210-hp (157-kW) flywheel power and developing a minimum of 48, 510-lbf (216-kN) breakout force with a general-purpose bare bucket; measured according to SAE J-732. Ratings are based on Catepillar's "Model No. 973C."

J. If Standard Penetration Values are used to Define Rock: Rock material in beds, ledges, unstratified masses, conglomerate deposits, and boulders of rock material ¾ cu. Yd. (0.57 cu. M) or more in volume that exceed a standard penetration resistance of 100 blows/2 inches (97 blows/50 mm) when tested by an independent geotechnical testing agency, according to ASTM D 1586.

K. Structures: Buildings, footings, foundations, retaining walls, slabs, tanks, curbs, mechanical and electrical appurtenances, or other man-made stationary features constructed above or below the ground surface.

L. Subbase Course: Course placed between the subgrade and base course for hot mix asphalt pavement, or course placed between the subgrade and a cement concrete pavement or a cement concrete or hot-mix asphalt walk.

M. Subgrade: Surface or elevation remaining after completing excavation, or top surface of a fill or backfill immediately below subbase, drainage fill, or topsoil materials.

N. Utilities: On-site underground pipes, conduits, ducts, and cables, as well as underground services within buildings.

CONTRACT NO. 04-012084

CONTRACT CHANGE ORDER NO 78

SHEET 10 OF 12

1.04- SUBMITTALS

A. The contractor shall submit samples of each type of backfill material to the Inspection and Testing Agency hired, employed or approved by the City. The size of the samples shall be as required by the Inspection and Testing Agency.

B. Prior to commencing the work, the Contractor shall submit his plans and supporting structural calculations for trench and excavation support systems to the Engineer for review and approval. No excavations shall be started until the Engineer has furnished written acceptance of the trench and excavation support system. Said review will be to assure the Engineer of general compliance with the Labor Code and Safety Orders and shall not be construed as a detailed analysis for adequacy of the support system, nor shall any provisions of the above requirements be construed as relieving the Contractor of his overall responsibility and liability for the work.

1.05- QUALITY ASSURANCE

A. Comply with the following provisions:

1. Testing Agency: The City will provide the services of a qualified testing laboratory or agency as necessary to control the quality of materials and to fulfill the requirements of the Contract Documents.

2. Verify all dimensions in the field and check all field conditions continuously during construction.

3. Inspect related and appurtenant work and report in writing to the Engineer all conditions which will prevent proper completion of the work in accordance with the requirements of the Contract Documents.

4. Perform all required removal, repair, or replacement caused by unsuitable conditions at no cost to the City.

5. Record all changes and modifications to the Contract work as required by site conditions and inspections in accordance with the As Built Drawings.

B. Use equipment adequate in size, capacity, and number to accomplish the work of this Section in a timely manner.

C. In addition to complying with requirements of governmental agencies having jurisdiction, comply with the directions of the Engineer.

D. The design engineer for excavation support systems shall be a licensed Civil or Structural Engineer in the State of California, and shall have experience in providing

successful engineering services for excavation support systems and dewatering work similar in extent to that required for this project.

E. Structural Observations: The design engineer for the excavation support systems and dewatering work shall perform structural observation and provide a letter stating that the shoring work is in accordance with his/her design.

1.06- Existing Site Conditions

A. Verify existing soil conditions using project soil report, if available.

PART 2-PRODUCTS

2.01- FILL MATERIALS

A. All fill materials shall be free of organic and deleterious materials. The Contractor shall protect stockpiled fill material with plastic sheeting or other acceptable means, to prevent the entry of water during rains. If the material becomes permeated with water and the required compaction cannot be obtained by the Contractor after drying the material, he shall remove such material from the site and replace it with acceptable material, at no cost to the City.

B. Imported sand type or equivalent backfill shall be free from rock, concrete, organic material and other objectionable material. Backfill material shall have 100% passing the 3/8" sieve size, 93% to 100% passing the No.4 sieve size and 0% to 10% passing the No. 200 sieve size. Samples shall be submitted to and approved by the Department of Public Works' Material Testing Laboratory prior to placement. Unacceptable material shall be immediately removed from the site of work.

PART 3-EXECUTION

3.01- EXCAVATION FOR STRUCTURES

A. Excavate to indicated elevations and dimensions within a tolerance of plus or minus 1 inch (25 mm). If applicable, extend excavations a sufficient distance from structures for placing and removing concrete formwork, for installing services and other construction, and for inspections.

1. Excavations for Footings and Foundations: Do not disturb bottom of excavation. Excavate by hand to final grade just before placing concrete reinforcement. Trim bottom to required lines and grades to leave solid base to receive other work.

CONTRACT NO. 04-0120R4

CONTRACT CHANGE ORDER NO 78

SHEET 7 OF 12

2. Pile Foundations: Stop excavations 6 to 12 inches (150 to 300 mm) above bottom of pile cap before piles are placed. After piles have been driven, remove loose and displaced material. Excavate to final grade, leaving solid base to receive concrete pile caps.

3. Excavation for Underground Tanks, Basins, and Mechanical or Electrical Utility Structures: Excavate to elevations and dimensions indicated within a tolerance of plus or minus 1 inch (25 mm). Do not disturb bottom of excavations intended as bearing surfaces.

3.02 –EXCAVATION FOR UTILITY TRENCHES

A. Excavate trenches to indicated grades, lines, depths, and elevations.

1. Beyond building perimeter, excavate trenches to allow installation of top of pipe below frost line.

B. Excavate trenches to uniform widths to provide the following clearance on each side of pipe or conduit. Excavate trench walls vertically from trench bottom to 12 inches (300 mm) higher than top of pipe or conduit, unless otherwise indicated.

C. Trench Bottoms: Excavate and shape trench bottoms to provide uniform bearing and support of pipes and conduit. Shape subgrade to provide continuous support for bells, joints, and barrels of pipes and for joints, fittings, and bodies of conduits. Remove projecting stones and sharp objects along trench subgrade.

1. For pipes and conduit less than 6 inches (150 mm) in nominal diameter and flat-bottomed, multiple-duct conduit units, hand-excavate trench bottoms and support pipe and conduit on an undisturbed subgrade.

2. For pipes and conduit 6 inches (150 mm) or larger in nominal diameter, shape bottom of trench to support bottom 90 degrees of pipe circumference. Fill cepressions with tamped sand backfill.

3. Excavate trenches 6 inches (150 mm) deeper than elevation required in rock or other unyielding bearing material.

D. Trench Bottoms (if a bedding course is required under pipe): Excavate trenches 4 inches (100 mm) deeper than bottom of pipe elevation to allow for bedding course. Hand excavate for bell of pipe.

1. Excavate trenches 6 inches (150 mm) deeper than elevation required in rock or other unyielding bearing material to allow for bedding course.

CONTRACT NO. 04-0120R4

CONTRACT CHANGE ORDER NO 78

SHEET 8 OF 12

3.03- BACKFILL

A. Place and compact backfill in excavations promptly, but not before completing the following:

1. Construction below finish grade including, where applicable, subdrainage, dampproofing, waterproofing, and perimeter insulation.

2. Survey locations of underground utilities for Record Documents.
3. Testing and inspecting of underground utilities.

4. Removing concrete formwork.

5. Removing trash and debris.

6. Removing temporary shoring, bracing, and sheeting.

7. Installing permanent or temporary horizontal bracing on horizontally supported walls.

B. Place backfill on subgrades free of mud, frost, snow, or ice.

3.04- UTILITY TRENCH BACKFILL

A. Place backfill on subgrades free of mud, frost, snow, or ice.

B. Place and compact bedding course on trench bottoms and where indicated. Shape bedding course to provide continuous support for bells, joints, and barrels of pipes and for joints, fittings, and bodies of conduits.

C. Backfill trenches excavated under footings and within 18 inches (450 mm) of bottom of footings with satisfactory soil; fill with concrete to elevation of bottom of footings.

D. Provide 4-inch -(100-mm-) thick, concrete-base slab support for piping or conduit less than 30 inches (750 mm) below surface of roadways. After installing and testing, completely encase piping or conduit in a minimum of 4 inches (100 mm) of concrete before backfilling or placing roadway subbase.

1. Carefully compact initial backfill under pipe haunches and compact evenly up on both sides and along the full length of utility piping or conduit to avoid damage or displacement of piping or conduit. Coordinate backfilling with utilities testing.

F. Controlled Low-Strength Material (initial): Place initial backfill of controlled low-strength material to a height of 12 inches (300 mm) over the utility pipe or conduit, if

controlled low-strength material is permitted or required as initial backfill instead of a soil material in paragraph above.

G. Backfill voids with soil while installing and removing shoring and bracing.

H. Place and compact final backfill of satisfactory soil to final subgrade elevation.

I. Controlled Low-Strength Material (final): Place final backfill of controlled low-strength material to final subgrade elevation, if controlled low-strength material is permitted or required as final backfill instead of soil in paragraph above.

J. Install warning tape directly above utilities, 12 inches (300 mm) below finished grade, except 6 inches (150 mm) below subgrade under pavements and slabs.

3.05- SOIL FILL

A. Plow, scarify, bench, or break up sloped surfaces steeper than 1 vertical to 4 horizontal so fill material will bond with existing material.

B. Place and compact fill material in layers to required elevations as follows:

1. Under grass and planted areas, use satisfactory soil material.

2. Under walks and pavements, use satisfactory soil material.

3. Under steps and ramps, use engineered fill.

4. Under building slabs, use engineered fill.

5. Under footings and foundations, use engineered fill.

C. Place soil fill on subgrades free of mud, frost, snow, or ice.

3.06- SOIL MOISTURE CONTROL

A. Uniformly moisten or aerate subgrade and each subsequent fill or backfill soil layer before compaction to within 2 percent of optimum moisture content.

1. Do not place backfill or fill soil material on surfaces that are muddy, frozen, or contain frost or ice.

2. Remove and replace or scarify and air dry otherwise satisfactory soil material that exceeds optimum moisture content by 2 percent and is too wet to compact to specified dry unit weight.

CONTRACT NO. 04-012084

CONTRACT CHANGE ORDER NO 78

SHEET 9 OF 12

TECHNICAL SPECIFICATIONS
DIVISION 2: SITEWORK
02200: EARTHWORK

3.07- COMPACTION OF SOIL BACKFILLS AND FILLS

A. Place backfill and fill soil materials in layers not more than 8 inches (200 mm) in loose depth for material compacted by heavy compaction equipment, and not more than 4 inches (100 mm) in loose depth for material compacted by hand-operated tampers.

B. Place backfill and fill soil materials evenly on all sides of structures to required elevations, and uniformly along the full length of each structure.

C. Compact soil materials to not less than the following percentages of maximum dry unit weight according to ASTM D 698, unless otherwise to be ASTM D 1557:

1. Under structures, building slabs, steps, and pavements, scarify and recompact top 12 inches (300 mm) of existing subgrade and each layer of backfill or fill soil material at 95 percent.

2. Under walkways, scarify and recompact top 6 inches (150 mm) below subgrade and compact each layer of backfill or fill soil material at 92 percent.

3. Under lawn or unpaved areas, scarify and recompact top 6 inches (150 mm) below subgrade and compact each layer of backfill or fill soil material at 85 percent.

4. For utility trenches, compact each layer of initial and final backfill soil material at 85 percent.

3.08- GRADING

A. General: Uniformly grade areas to a smooth surface, free of irregular surface changes. Comply with compaction requirements and grade to cross sections, lines, and elevations indicated.

B. Site Grading: Slope grades to direct water away from buildings and to prevent ponding. Finish subgrade to required elevations within the following tolerances:

1. Lawn and Unpaved Areas: Plus or minus 1 inch (25 mm).

2. Walks: Plus or minus 1 inch (25 mm)

3. Pavements: Plus or minus ½ inch (13 mm).

C. Grading inside Building Lines: Finish subgrade to a tolerance of ½ inch (13 mm) when tested with a 10-foot (3 m) straightedge.

3.09- SUBBASE AND BASE COURSES

A. Place subbase and base course on subgrades free of mud, frost, snow, or ice.

B. On prepared subgrade, place subbase and base course under pavements and walks as follows:

1. Shape subbase and base course to required crown elevations and cross-slope grades.

2. Place subbase and base course 6 inches (150mm) in compacted thickness in a single layer.

3. Place subbase and base course that exceeds 6 inches (150 mm) in compacted thickness in layers of equal thickness, with no compacted layer more than 6 inches (150 mm) thick or less than 3 inches (75 mm) thick.

C. Pavement Shoulders: Place shoulders along edges of subbase and base course to prevent lateral movement. Construct shoulders at least 12 inches (300 mm) wide, of satisfactory soil materials and compact simultaneously with each subbase and base layer to not less than 95 percent of maximum dry unit weight according to ASTM D 698, unless directed otherwise to be ASTM D 1557.

3.10- PROTECTION

A. Protecting Graded Areas: Protect newly graded areas from traffic, freezing, and erosion. Keep free of trash and debris.

B. Repair and reestablish grades to specified tolerances where completed or partially completed surfaces become eroded, rutted, settled, or where they lose compaction due to subsequent construction operations or weather conditions.

C. Where settling occurs before Project correction period elapses, remove finished surfacing, backfill with additional soil material, compact, and reconstruct surfacing.

1. Restore appearance, quality, and condition of finished surfacing to match adjacent work, and eliminate evidence of restoration to greatest extent possible.

D. Work shall be conducted to avoid injury to persons and damage to property. All

holes/trenches shall be protected/covered.

E. Protect excavation by shoring or methods as required to prevent excavation cavins and accumulation of debris.

3.11- DISPOSAL OF MATERIALS

A. Excavated material shall not be stacked on any excavation or over buried pipes or structures. Inconvenience to traffic and work by others shall be avoided as much as possible. Excavated material shall be segregated for use in backfilling as directed by Engineer.

B. Surplus excavated suitable fill material shall be disposed of by the Contractor off the work site. Any costs associated with the hauling and disposal of this surplus material shall be borne by the Contractor. If too much suitable fill material is removed from the site, the cost of bringing it back will be the responsibility of the Contractor.

C. Material which is unsuitable for fill, including large sizes of rock, cemented materials boulders, broken concrete, asphalt and other materials shall be removed and disposed of at the Contractor's expense at a waste disposal or landfill site conforming to all County, State, and Federal regulations.

CONTRACT NO. 04-012024

CONTRACT CHANGE ORDER NO 78

SHEET 10 OF 12

D. Protect existing structures, fences, and curbs from excavation equipment and vehicular traffic.

3.03 CUTTING

A. Make grade changes gradual. Blend slope into level areas.

B. Remove surplus cut materials from site.

3.04 TOLERANCES

A. Top surface of subgrade: Plus or minus 1/10 foot.

END OF SECTION 02211

CONTRACT NO. 04-012024

CONTRACT CHANGE ORDER NO 78

SHEET 11 OF 12

PART 1 GENERAL

1.01 DESCRIPTION

A. The work of this section consists of trenching and backfilling for the construction and installation of pipe lines. All trenching will be open cut.

1.02 DEFINITION

A. Materials used in backfill are defined as follows:

Sieve Size	Percent Passing
1/2-inch	100
No. 4	50-80
No. 40	10-25
No. 200	5 (Maximum)

1.03 QUALITY ASSURANCE:

A. All compaction testing and gradation analysis will be arranged and paid for by the City. Contractor shall submit required samples of bedding, fill, and backfill materials for testing.

B. Compaction of fill and backfill materials in accordance with the requirements of Section 02200.

1.04 SUBMITTALS

A. Written procedure for trench de-watering and disposal of fluidized materials removed.

B. Written description of barricading, shoring, cribbing, bracing, and sloping precautions.

1.05 PROJECT CONDITIONS

A. Arrange construction sequences to provide the shortest practical time that the trenches will be open to avoid hazard to the public, and to minimize the possibility of trench collapse.

1.06 EXCAVATION CLASSIFICATION

A. Regardless of the nature of material excavated, all excavation will be considered unclassified.

PART 2 PRODUCTS

2.01 GENERAL

A. All backfill material shall be approved before use and be free of cinders, ashes, large hard clods, organic debris, or other deleterious items. Trench excavation materials may be used as approved.

2.02 MATERIALS FOR BACKFILLING

A. Furnish required backfill materials listed under the appropriate types of utility line in Section 02200.

PART 3 EXECUTION

3.01 TRENCH EXCAVATION

A. Trenching Guidelines: Excavate the trench to the approximate level of the top of the utility line to be installed, using adequate trench width and side slopes to safely accommodate worker access. Continue excavating for the utility line, to a width not greater than is shown on the appropriate trench detail.

1. Unstable Trench Bottom: Secure approval of depth of over-excavation and stabilization method. For wet trench construction, use approved method of dewatering through diversion, damming and pumping, well points, or subsoil drain systems. Dispose of removed fluidized materials as approved. Use backfill material to build a suitable foundation to within 6 inches of finished utility grade, prior to bedding with the specified material. Compact layers until unstable conditions are under control.

3.02 SHORING AND SHEETING

A. Construct and maintain all shoring, sheeting, and slope lay-back necessary to protect the excavation, as needed for the safety of the employees and as required by applicable State and Federal laws.

TECHNICAL SPECIFICATIONS
DIVISION 2: SITE CONSTRUCTION
02221: UTILITY TRENCHING AND BACKFILLING

3.03 BACKFILLING

A. Compaction: Use vibratory compactors for sands and gravels (noncohesive soils). Use mechanical tampers for sand and gravel containing a significant portion of fine-grained material, such as silt and clay (cohesive soils). Hand tamp around pipe or cable to protect the lines until adequate cushion is attained. Puddling or water flooding for consolidation of backfill or compaction by wheel rolling with construction equipment will not be permitted.

B. Bedding: compact the specified material to 95 percent of maximum density to the finished utility grade.

C. Utility Installation: Shape the trench bottom to ensure uniform contact with the full length of the installed line and remove any sharp-edged materials that might damage the line. Compaction shall be maintained beneath the line.

D. Backfill: Fill by hand placement around the utility to just over half depth, and compact in a manner to ensure against lateral or vertical displacement. Place backfill to 12 inches above the utility line by hand placement in not more than 6-inch layers. Compact each layer to 95 percent of maximum density.

E. Backfill: Place and compact the specified material as follows:

1. Pedestrian Areas: Fill and compact in 8-inch maximum layers to 90 percent of maximum density.

F. Clean-Up: Prior to final inspection and acceptance, remove all rubbish and excess material for disposal as approved, and leave area in a neat, satisfactory condition.

END OF SECTION 02221

CONTRACT NO. 04-0120R4

CONTRACT CHANGE ORDER NO 78

SHEET 12 OF 12

STATE OF CALIFORNIA - DEPARTMENT OF TRANSPORTATION

CONTRACT CHANGE ORDER

Change Requested by: Engineer

CCO 79	Suppl. No. 0	Contract No. 04 - 0120R4	Road SF-80-12.6/13.2	FED. AID LOC.: ACBRIM-080-1(097)N

To: **CC MYERS INC**

You are directed to make the following changes from the plans and specifications or do the following described work not included in the plans and specifications for this contract. ***NOTE: This change order is not effective until approved by the Engineer.***

Description of work to be done, estimate of quantities and prices to be paid. (Segregate between additional work at contract price, agreed price and force account.) Unless otherwise stated, rates for rental of equipment cover only such time as equipment is actually used and no allowance will be made for idle time. This last percentage shown is the net accumulated increase or decrease from the original quantity in the Engineer's Estimate.

Adjustment of Compensation at Lump Sum:

Provide compensation to the Contractor for additional steel fabrication and inland shipping costs to be incurred due to Department-directed design enhancements to the steel viaduct of the Temporary Bypass Structure (Bridge No. 34-0006 (TEMP)) that were incorporated into Imbsen & Associates Inc. approved "Final Superstructure Resubmittal" viaduct plans (Sheets 1 through 112) dated October 9, 2006.

This change order includes compensation for additional fabrication costs, including furnishing steel and providing all labor and equipment, concerning the following changes to the viaduct design:

1) Revisions incorporated to the floor beam dimensions.

2) Revisions incorporated to the stringer and floor beam connection detail.

3) The addition of steel stopper block brackets to the floor beam bottom flange.

For this work, the Contractor will be compensated a lump sum of $803,400.00.

The intent of this change order is to provide compensation for the verified additional fabrication and inland shipping costs a a result of the Department design enhancements that were incorporated into Imbsen & Associates Inc. approved viaduct plans dated October 9, 2006. The compensation provided represents costs verified to date and this change does not preclude the Contractor from claiming additional costs related to these changes.

Upon the verification of any additional costs, a supplemental change order shall be issued to provide compensation for these costs.

Compensation for delays resulting from this work will be made in accordance with Section 8-1.09 "Right of Way Delays" of the Standard Specifications.

Consideration of a time adjustment will be deferred until completion of work specified herein. Determination of a commensurate time extension will be made in accordance with Section 8-1.07 Liquidated Damages of the Standard Specifications.

Total Cost of Adjustment of Compensation at Lump Sum $803,400.00

STATE OF CALIFORNIA - DEPARTMENT OF TRANSPORTATION

CONTRACT CHANGE ORDER

Change Requested by: Engineer

CCO 79	Suppl. No. 0	Contract No. 04 - 0120R4	Road SF-80-12.6/13.2	FED. AID LOC.: ACBRIM-080-1(097)N

Estimated Cost: Increase ☑ Decrease ☐ $803,400.00

By reason of this order the time of completion will be adjusted as follows: 0 days

Submitted by

Signature M. U. Anigol	Resident Engineer MAHANTESH ANIGOL	Date 7/18/07

Approval Recommended by

Signature Michael Fraser	Area Construction Manager DENNIS TURCHON	Date 7/18/07

Engineer Approval by

Signature Michael Fraser	Area Construction Manager DENNIS TURCHON	Date 7/20/07

We the undersigned contractor, have given careful consideration to the change proposed and agree, if this proposal is approved, that we will provide all equipment, furnish the materials, except as may otherwise be noted above, and perform all services necessary for the work above specified, and will accept as full payment therefor the prices shown above.

NOTE: If you, the contractor, do not sign acceptance of this order, your attention is directed to the requirements of the specifications as to proceeding with the ordered work and filing a written protest within the time therein specified.

Contractor Acceptance by

Signature	(Print name and title) Patrick E. Hamick, President	Date 7/19/07

STATE OF CALIFORNIA - DEPARTMENT OF TRANSPORTATION

RECEIVED

CONTRACT CHANGE ORDER MEMORANDUM

DATE: 7/17/2007

006283 AUG-8

TO: MIKE FORNER / DENNIS TURCHON	FILE: **E.A.** 04 - 0120R4
	CO-RTE-PM SF-80-12.6/13.2
FROM: MAHANTESH ANIGOL	**FED. NO.** ACBRIM-080-1(097)N

CCO# **79**	SUPPLEMENT#: **0**	Category Code: **CHPA**	CONTINGENCY BALANCE (incl. this change) **$25,726,320.65**
COST: **$803,400.00**	INCREASE ☑	DECREASE ☐	HEADQUARTERS APPROVAL REQUIRED? ☑ YES ☐ NO
SUPPLEMENTAL FUNDS PROVIDED: **$0.00**			IS THIS REQUEST IN ACCORDANCE WITH ENVIRONMENTAL DOCUMENTS? ☑ YES ☐ NO

CCO DESCRIPTION:
Fabrication Costs VIA Design Changes

PROJECT DESCRIPTION:
CONSTRUCT ROUTE 80 TEMP BYPASS STRUCTURE

Original Contract Time:	Time Adj. This Change:	Previously Approved CCO Time Adjustments:	Percentage Time Adjusted: (including this change)	Total # of Unreconciled Deferred Time CCO(s): (including this change)
475 Day(s)	DEF Day(s)	381 Day(s)	80 %	7

THIS CHANGE ORDER PROVIDES FOR:

compensation to the contractor for verified costs related to Department-directed design enhancements concerning the viaduct steel truss.

This contract was awarded on March 10, 2004 to construct a temporary detour for both eastbound and westbound I-80 traffic that allows for the tie in of the east span of the new San Francisco Oakland Bay Bridge (SFOBB) to Yerba Buena Island. The detour consist of three main structures, the east tie in to the bridge, the west tie in to the island and the viaduct structure between the two tie ins. The contract was awarded as a performance based project with the contractor responsible for meeting the design criteria specified in the contract.

This change order concerns additional steel fabrication costs pertaining to Department-directed design enhancements to the viaduct structure. The viaduct consists of 4 spans of a double deck steel truss approximately 20 meters wide and 320 meters long with a weight of over 4,300 metric tons.

During the design approval process, the main SFOBB Self Anchored Suspension Bridge (SAS) project, for which this project was a precursor, was incurring significant delay. This delay to the SAS resulted in the detour structure being in use for a significantly longer period than originally anticipated.

In order to satisfy the Department that the safety of the traveling public would be fully addressed, the Office of Structures Design requested several design enhancements to the steel truss concerning the connection of the floor beam and stringers and the addition of stopper blocks and brackets at the bent caps. These enhancements were implemented by the contractor's designer under Change Orders No. 49 and 50 and were incorporated into the contractor's approved viaduct plan sheets dated October 9, 2006. This change order shall provide compensation for additional steel fabrication costs associated with the design enhancements.

The contractor has submitted costs totaling to approximately $1,600,000.00 concerning the steel fabrication of the viaduct resulting from these changes with major costs associated with the work including furnishing raw steel, revising shop drawings, additional cutting, welding and grinding and additional shipping costs due to the added weight of the structure. To date $803,400.00 of these costs have been verified and agreed to by the Department. This change order provides compensation for these verified costs in order provide timely payment to the contractor.

It is anticipated that further compensation shall be due the contractor upon further verification and agreement of the outstanding costs submitted. Any additional costs shall be paid through a supplement to this change order.

Compensation shall be paid as an adjustment of compensation at an agreed lump sum of $803,400.00 which shall be financed from the contract's contingency funds. A cost estimate is on file.

Costs concerning a 2-month delay to the start of steel fabrication of the viaduct are being addressed separately under Change Order No. 88. Additional jobsite costs concerning steel handling and erection due to the implementation of the viaduct design enhancements are not addressed under this change and shall be compensated under Change Orders No. 80.

Any time adjustments relating to this work will be deferred as it may impact the controlling operation.

ADA Notice: For individuals with sensory disabilities, this document is available in alternate formats. For information call: (916) 654-6410 or TDD (916) 654-3880 or wr
Records and Forms Management, 1120 N Street, MS-89, Sacramento, CA 95814.

Maintenance concurrence is not required as the viaduct is a temporary structure and doesn't affect any permanent roadway features.

CONCURRED BY:		
Construction Engineer:	Mahantesh Anigol MA	Date 7/18/07
Bridge Engineer:	Bill Casey, Struct. Rep	Date 7/18/07
Project Engineer:	Hong Wong	Date 7/20/07
Project Manager:	Alec Melkonians	Date 7/20/07
FHWA Rep.:		Date
Environmental:		Date
Other (specify):	Robert Kobal, HQ Asst.Const.Coor	Date 7/18/07
Other (specify):		Date
District Prior Approval By:		Date
HQ (Issue Approve) By:	Ken Darby, HQ CCO Engineer	Date 7/19/07
Resident Engineer's Signature:		Date
M.M. Anigol		7/18/07

ESTIMATE OF COST	THIS REQUEST	TOTAL TO DATE
ITEMS	$0.00	$0.00
FORCE ACCOUNT	$0.00	$0.00
AGREED PRICE	$0.00	$0.00
ADJUSTMENT	$803,400.00	$803,400.00
TOTAL	$803,400.00	$803,400.00

FEDERAL PARTICIPATION

☐ PARTICIPATING ☐ PARTICIPATING IN PART ☑ NONE
☐ NON-PARTICIPATING (MAINTENANCE) ☐ NON-PARTICIPATING

FEDERAL SEGREGATION (if more than one Funding Source or P.I.P. type)
☑ CCO FUNDED PER CONTRACT ☐ CCO FUNDED AS FOLLOWS

FEDERAL FUNDING SOURCE	PERCENT

ADA Notice: For individuals with sensory disabilities, this document is available in alternate formats. For information call: (916) 654-6410 or TDD (916) 654-3880 or write Records and Forms Management, 1120 N Street, MS-89, Sacramento, CA 95814.

STATE OF CALIFORNIA - DEPARTMENT OF TRANSPORTATION

CONTRACT CHANGE ORDER

Change Requested by: Engineer

CCO 79	Suppl. No. 1	Contract No. 04 - 0120R4	Road SF-80-12.6/13.2	FED. AID LOC.: ACBRIM-080-1(097)N

To: CC MYERS INC

You are directed to make the following changes from the plans and specifications or do the following described work not included in the plans and specifications for this contract. ***NOTE: This change order is not effective until approved by the Engineer.***

Description of work to be done, estimate of quantities and prices to be paid. (Segregate between additional work at contract price, agreed price and force account.) Unless otherwise stated, rates for rental of equipment cover only such time as equipment is actually used and no allowance will be made for idle time. This last percentage shown is the net accumulated increase or decrease from the original quantity in the Engineer's Estimate.

Adjustment of Compensation at Lump Sum:

Provide compensation to the Contractor for all outstanding steel fabrication costs incurred due to Department ordered design enhancements to the steel Viaduct of the Temporary Bypass Structure (Bridge No. 34-0006 (TEMP)) that were incorporated into the approved Viaduct plans dated October 9, 2006.

For this work, the Contractor will be compensated a lump sum of $75,860.00.

This change order constitutes full compensation for all outstanding fabrication costs incurred in the fabrication of the Viaduct due to all Department delays and changes to the Viaduct structure that were incorporated into the Viaduct plans dated October 9, 2006.

Compensation for delays resulting from this work will be made in accordance with Section 8-1.09 "Right of Way Delays" of the Standard Specifications.

Consideration of a time adjustment will be deferred until completion of work specified herein. Determination of a commensurate time extension will be made in accordance with Section 8-1.07 Liquidated Damages of the Standard Specifications.

Total Cost of Adjustment of Compensation at Lump Sum $75,860.00

Estimated Cost: **Increase** ☑ **Decrease** ☐ **$75,860.00**

By reason of this order the time of completion will be adjusted as follows: Deferred

Submitted by

Signature	Resident Engineer	Date
	BILL CASEY	6-11-08

Approval Recommended by

Signature	Area Construction Manager	Date
	DENNIS TURCHON	6/11/08

Engineer Approval by

Signature	Area Construction Manager	Date
	DENNIS TURCHON	7/10/08

We the undersigned contractor, have given careful consideration to the change proposed and agree, if this proposal is approved, that we will provide all equipment, furnish the materials, except as may otherwise be noted above, and perform all services necessary for the work above specified, and will accept as full payment therefor the prices shown above.

NOTE: If you, the contractor, do not sign acceptance of this order, your attention is directed to the requirements of the specifications as to proceeding with the ordered work and filing a written protest within the time therein specified.

Contractor Acceptance by

Signature	(Print name and title)	Date
Dewey C Lee, Jr	DEWEY C. LEE JR. Contract Manager	6/23/08

STATE OF CALIFORNIA - DEPARTMENT OF TRANSPORTATION

CONTRACT CHANGE ORDER MEMORANDUM

DATE: 6/6/2008 Page 1 of 1

TO: MIKE FORNER / DENNIS TURCHON	FILE: E.A. 04 - 0120R4
	CO-RTE-PM SF-80-12.6/13.2
FROM: BILL CASEY	FED. NO. ACBRIM-080-1(097)N
CCO#: 79 SUPPLEMENT#: 1 Category Code: CHPA	CONTINGENCY BALANCE (incl. this change) $11,320,883.12
COST: $75,860.00 INCREASE ☑ DECREASE ☐	HEADQUARTERS APPROVAL REQUIRED? ☑ YES ☐ NO
SUPPLEMENTAL FUNDS PROVIDED: $0.00	IS THIS REQUEST IN ACCORDANCE WITH ENVIRONMENTAL DOCUMENTS? ☑ YES ☐ NO
CCO DESCRIPTION: VIA Dongkuk Fabrication Closeout (Oct06)	**PROJECT DESCRIPTION:** CONSTRUCT ROUTE 80 TEMP BYPASS STRUCTURE

Original Contract Time:	Time Adj. This Change:	Previously Approved CCO Time Adjustments:	Percentage Time Adjusted: (including this change)	Total # of Unreconciled Deferred Time CCO(s): (including this change)
475 Day(s)	DEF Day(s)	1195 Day(s)	252 %	8

THIS CHANGE ORDER PROVIDES FOR:

compensation to the contractor for all outstanding costs related to Department ordered design enhancements concerning the Viaduct steel truss.

The original Change Order No. 79 provided partial compensation to the contractor for additional steel fabrication costs pertaining to Department ordered design enhancements to the Viaduct structure (See attached CCO No. 79 and memo). This change order provides additional compensation based upon additional verified costs concerning the steel fabrication and acts to close out all costs related to the design enhancements.

The original change order provided $803,400 in compensation based on costs that were verified at the time the change order was issued. This change order provides additional compensation of $75,860 to resolve all outstanding costs.

Compensation shall be paid as an adjustment of compensation at an agreed lump sum of $75,860 which shall be financed from the contract's contingency funds. A cost estimate is on file.

Adjustment of contract time is deferred as the work may affect the controlling operation.

This change was concurred by Alec Melkonians - Asst. Project Manager and Hong Wong - Project Engineer.

Maintenance concurrence is not required as the viaduct is a temporary structure and doesn't affect any permanent roadway features.

CONCURRED BY:			
Construction Engineer:	Bill Casey, Resident Engineer	Date	6/11/08
Bridge Engineer:		Date	
Project Engineer:	Hong Wong, PE	Date	6/9/08
Project Manager:	Alec Melkonians	Date	6/10/08
FHWA Rep.:		Date	
Environmental:		Date	
Other (specify):		Date	
Other (specify):		Date	
District Prior Approval By:		Date	
HQ (Issue Approve) By:	Ken Darby, HQ CCO Engineer	Date	6/13/08
Resident Engineer's Signature:		Date	6-11-08

ESTIMATE OF COST

	THIS REQUEST	TOTAL TO DATE
ITEMS	$0.00	$0.00
FORCE ACCOUNT	$0.00	$0.00
AGREED PRICE	$0.00	$0.00
ADJUSTMENT	$75,860.00	$879,260.00
TOTAL	$75,860.00	$879,260.00

FEDERAL PARTICIPATION

☐ PARTICIPATING ☐ PARTICIPATING IN PART ☑ NONE
☐ NON-PARTICIPATING (MAINTENANCE) ☐ NON-PARTICIPATING

FEDERAL SEGREGATION (if more than one Funding Source or P.I.P. type)
☑ CCO FUNDED PER CONTRACT ☐ CCO FUNDED AS FOLLOWS

FEDERAL FUNDING SOURCE	PERCENT

ADA Notice: For individuals with sensory disabilities, this document is available in alternate formats. For information call: (916) 654-6410 or TDD (916) 654-3880 or write Records and Forms Management, 1120 N Street, MS-89, Sacramento, CA 95814.

CONTRACT CHANGE ORDER

Change Requested by: Engineer

CCO 80	Suppl. No. 0	Contract No. 04 - 0120R4	Road SF-80-12.6/13.2	FED. AID LOC.: ACBRIM-080-1(097)N

To: CC MYERS INC

You are directed to make the following changes from the plans and specifications or do the following described work not included in the plans and specifications for this contract. ***NOTE: This change order is not effective until approved by the Engineer.***

Description of work to be done, estimate of quantities and prices to be paid. (Segregate between additional work at contract price, agreed price and force account.) Unless otherwise stated, rates for rental of equipment cover only such time as equipment is actually used and no allowance will be made for idle time. This last percentage shown is the net accumulated increase or decrease from the original quantity in the Engineer's Estimate.

Adjustment of Compensation at Lump Sum:

In accordance with Section 4-1.03 "Changes" of the contract Standard Specifications, provide compensation to the Contractor for additional steel erection costs to be incurred by the Contractor's subcontractor Danny's Construction Company, Inc (DCCI) due to all Department delays and all Department design enhancements to the steel Viaduct of the Temporary Bypass Structure (Bridge No. 34-0006 (TEMP)) that were incorporated into Imbsen & Associates Inc. approved "Final Superstructure Resubmittal" Viaduct plans (Sheets 1 through 112) dated October 09, 2006.

For this work, the Contractor will be compensated a lump sum of $6,912,200.00. This sum constitutes full and final compensation for all additional costs to be incurred by DCCI, including all markups, due to all Department changes and delays to the work concerning the erection of the Viaduct structure as of the issuance of the Viaduct plans dated October 09, 2006.

The following 3 items of work pertaining to the erection of the steel Viaduct have not been addressed by this change order and shall remain outstanding:

1) Costs associated with the Contractor's support of DCCI's erection of the steel Viaduct, including the construction of falsework foundations (piling), the escalation of as-planned support costs due to Department delays and additional support costs incurred due to Department changes.

2) Costs associated with Department changes to the Viaduct due to Department design enhancements ordered after the issuance of the Viaduct plans dated October 9, 2006.

3) Costs associated with the adjustment of time-related overhead payments as they pertain to DCCI and the time extensions granted under Change Order No. 24, Change Order No. 24, Supplement No. 2, Change Order No. 91 and Change Order No. 91, Supplement No. 1.

This change order acts to resolve all outstanding costs associated with DCCI as they pertain to Notice of Potential Claims No. 2, No. 5, No. 8, No. 9 and No. 16.

Total Cost of Adjustment of Compensation at Lump Sum $6,912,200.00

CONTRACT CHANGE ORDER

Change Requested by: Engineer

CCO 80	Suppl. No. 0	Contract No. 04 - 0120R4	Road SF-80-12.6/13.2	FED. AID LOC.: ACBRIM-080-1(097)N

Estimated Cost: Increase ☑ Decrease ☐ $6,912,200.00

By reason of this order the time of completion will be adjusted as follows: Deferred

Submitted by

Signature	Resident Engineer	Date
	BILL CASEY	12-14-07

Approval Recommended by

Signature	SFOBB Construction Manager	Date
Michael Forner	MIKE FORNER	12-17-07

Engineer Approval by

Signature	SFOBB Construction Manager	Date
Michael Forner	MIKE FORNER	2-19-08

We the undersigned contractor, have given careful consideration to the change proposed and agree, if this proposal is approved, that we will provide all equipment, furnish the materials, except as may otherwise be noted above, and perform all services necessary for the work above specified, and will accept as full payment therefor the prices shown above.

NOTE: If you, the contractor, do not sign acceptance of this order, your attention is directed to the requirements of the specifications as to proceeding with the ordered work and filing a written protest within the time therein specified.

Contractor Acceptance by

Signature	(Print name and title)	Date
D E Hmick	DANIEL E. HMICK, PRESIDENT	2/08/08

STATE OF CALIFORNIA - DEPARTMENT OF TRANSPORTATION

CONTRACT CHANGE ORDER MEMORANDUM

DATE: 12/10/2007 Page 1 of 2

RECEIVED
007146 MAR -4 8

TO: MIKE FORNER / DENNIS TURCHON		FILE: E.A. 04 - 0120R4	
		CO-RTE-PM SF-80-12.6/13.2	
FROM: BILL CASEY		FED. NO. ACBRIM-080-1(097)N	
CCO#: 80	SUPPLEMENT#: 0	Category Code: FHBA	CONTINGENCY BALANCE (incl. this change) $123,666,499.41
COST: $6,912,200.00	INCREASE ☑ DECREASE ☐		HEADQUARTERS APPROVAL REQUIRED? ☑ YES ☐ NO
SUPPLEMENTAL FUNDS PROVIDED: $0.00			IS THIS REQUEST IN ACCORDANCE WITH ENVIRONMENTAL DOCUMENTS? ☑ YES ☐ NO
CCO DESCRIPTION: DCCI Erection Costs (Oct. 2006 Plans)			PROJECT DESCRIPTION: CONSTRUCT ROUTE 80 TEMP BYPASS STRUCTURE

Original Contract Time:	Time Adj. This Change:	Previously Approved CCO Time Adjustments:	Percentage Time Adjusted: (including this change)	Total # of Unreconciled Deferred Time CCO(s): (including this change)
475 Day(s)	DEF Day(s)	1195 Day(s)	252 %	8

THIS CHANGE ORDER PROVIDES FOR:

compensation to the contractor for additional steel erection costs related to Department delays and design enhancements.

This contract calls for the construction of a temporary detour for both eastbound and westbound I-80 traffic that allows for the tie in of the east span of the new San Francisco Oakland Bay Bridge (SFOBB) to Yerba Buena Island. The detour consist of three main structures, the East Tie-In (ETI) to the bridge, the West Tie-In (WTI) to the island and the Viaduct structure between the two. The contract was awarded as a performance-based project with the contractor responsible for meeting the design criteria specified in the contract.

This contract change order concerns additional steel erection costs pertaining to Department ordered design enhancements and delays to the Viaduct structure. The Viaduct consists of 4 spans of a double deck steel truss approximately 20 meters wide and 320 meters long with a weight of over 4,300 metric tons.

In order to satisfy the Department that the safety of the traveling public would be fully addressed, the Office of Structures Design requested several design enhancements to the steel truss. It was also determined in the Department's December 14, 2006 strategy memo that the Viaduct should be designed as a stand alone structure due to the anticipated lag in the completion of the ETI and WTI structures. This memo was approved by Tony Anziano – Toll Bridge Program Manager, Richard Land – Chief Engineer, and the Toll Bridge Program Oversight Committee (TBPOC) (per May 31, 2006 meeting).

These enhancements were implemented by the contractor's designer under Contract Change Orders No. 49 and 50 and were incorporated into the contractor's approved Viaduct plan sheets dated October 9, 2006 as summarized below:

1) Changes to the stringer and floor beam connections.
2) The addition of bent caps at Bents 49 through 52 including stopper blocks and brackets.
3) Changes to the top lateral bracing and connections.
4) Changes to the vertical members.
5) Changes to the truss joint details.
6) Changes to the bearing performance criteria.

Contract Change Order No. 60 was issued to provide compensation for the construction of the added bent caps, stopper blocks and brackets. This change order shall provide compensation for additional steel erection costs associated with the remaining design enhancements along with escalation costs resulting from 3 years of Department delays to the performance of this work.

The contractor's subcontractor, Danny's Construction Company, Inc. (DCCI), has submitted costs totaling approximately $13,360,000.00 concerning additional costs associated with the erection of the steel truss of the Viaduct due to both Department ordered changes and delays. Analysis of these costs has shown that a portion of the changes claimed by the contractor were not related to Department changes but were contractor initiated design changes. These costs have been identified as internal issues between the contractor and their designer and compensation is not being provided for those issues.

ADA Notice: For individuals with sensory disabilities, this document is available in alternate formats. For information call: (916) 654-6410 or TDD (916) 654-3880 or write Records and Forms Management, 1120 N Street, MS-89, Sacramento, CA 95814.

This change order provides compensation in the amount of $6,912,200.00 for Department ordered changes and delays. This sum can be divided into 3 main categories: (1) additional erection costs due directly to Department ordered design changes, (2) added cost of having to erect the Viaduct trusses using falsework in lieu of the contractor's planned truss erection on the ground and (3) escalation costs associated with the 3-year Department delay to the work.

The use of falsework was necessitated due to the addition of the bent caps which restricted the contractor's ability to lift the truss from the ground and up into place. This added restriction would be difficult to overcome with an already restricted jobsite work area. The design changes also added significant weight to the trusses that would have required a larger grade of crane to lift the trusses into place which in itself would have added significant costs comparable to the use of falsework.

Compensation shall be paid as an adjustment of compensation at an agreed lump sum of $6,912,200.00 which shall be financed from the contract's contingency funds. A detailed cost estimate is on file.

This change order acts to resolve all outstanding costs associated with DCCI as they pertain to Notice of Potential Claims No. 2, No. 5, No. 8, No. 9 and No. 16.

Costs concerning the contractor's support of DCCI's steel erection, the construction of falsework foundations, and the adjustment of time-related overhead are not addressed by this change order and shall remain outstanding. The Department has also ordered additional design enhancements after the issuance of the October 09, 2006 plans. The costs of these changes shall be addressed in a separate change order.

Adjustment of contract time is deferred as the work may affect the controlling operation.

CONCURRED BY:		
Construction Engineer:		Date
Bridge Engineer:	Tom Ostrom, OSD	Date 12/12/07
Project Engineer:	Hong Wong, PE	Date 12/17/07
Project Manager:	Alec Melkonians	Date 12/19/07
FHWA Rep.:		Date
Environmental:		Date
Other (specify):	Lina Ellis, Maintenance	Date 12/21/07
Other (specify):		Date
District Prior Approval By:		Date
HQ (Issue Approve) By:	Ken Darby, HQ CCO Engineer	Date 12/20/07
Resident Engineer's Signature:		Date
		2-5-08

ESTIMATE OF COST

	THIS REQUEST	TOTAL TO DATE
ITEMS	$0.00	$0.00
FORCE ACCOUNT	$0.00	$0.00
AGREED PRICE	$0.00	$0.00
ADJUSTMENT	$6,912,200.00	$6,912,200.00
TOTAL	$6,912,200.00	$6,912,200.00

FEDERAL PARTICIPATION

☐ PARTICIPATING ☐ PARTICIPATING IN PART ☐ NONE
☐ NON-PARTICIPATING (MAINTENANCE) ☑ NON-PARTICIPATING

FEDERAL SEGREGATION (if more than one Funding Source or P.I.P. type)
☑ CCO FUNDED PER CONTRACT ☐ CCO FUNDED AS FOLLOWS

FEDERAL FUNDING SOURCE	PERCENT

ADA Notice: For individuals with sensory disabilities, this document is available in alternate formats. For information call: (916) 654-6410 or TDD (916) 654-3880 or write Records and Forms Management, 1120 N Street, MS-89, Sacramento, CA 95814.

CONTRACT CHANGE ORDER

Change Requested by: Engineer

CCO 82	Suppl. No. 0	Contract No. 04 - 0120R4	Road SF-80-12.6/13.2	FED. AID LOC.: ACBRIM-080-1(097)N

To: **CC MYERS INC**

You are directed to make the following changes from the plans and specifications or do the following described work not included in the plans and specifications for this contract. ***NOTE: This change order is not effective until approved by the Engineer.***

Description of work to be done, estimate of quantities and prices to be paid. (Segregate between additional work at contract price, agreed price and force account.) Unless otherwise stated, rates for rental of equipment cover only such time as equipment is actually used and no allowance will be made for idle time. This last percentage shown is the net accumulated increase or decrease from the original quantity in the Engineer's Estimate.

Incorporate the following changes to the steel Viaduct of the Temporary Bypass Structure (Bridge No. 34-0006 (TEMP)):

1) Place open graded asphalt concrete (OGAC) for the wearing surface of the upper and lower decks of the Viaduct. OGAC shall be grade PG58-34PM and shall conform to Section 92 "Asphalts" of the contract Standard Specifications and as amended as shown on Sheets No. 3 through 6 of this change order. These changes shall be incorporated into Section 10-5.05 "Asphalt Concrete" of the Contractor's Technical Special Provisions for the Viaduct.

2) Design and construct expansion dams at Bents 49 and 50 of the Viaduct at both the upper and lower decks in order to prevent spalling of the asphalt concrete at these joints. These expansions dams shall be approved by the Engineer prior to their placement.

3) Grind the upper and lower decks of the Viaduct to meet the tolerances specified under Section 51-1.17 "Finishing Bridge Decks" of the Standard Specifications, as amended per Section 51 of the Special Provisions. Grinding shall be performed on the concrete deck surface prior the placement of the OGAC wearing surface.

Extra Work at Force Account:

Perform all grinding of the upper and lower decks of the Viaduct as specified under this change order and as authorized by the Engineer.

Estimated Cost of Extra Work at Force Account $250,000.00

Adjustment of Compensation at Unit Price:

Provide compensation to the Contractor for all costs associated with furnishing and placing the open graded asphalt concrete as specified under this change order due to all Department changes and delays to this work.

For this work, the Contractor will be compensated a unit price of $119.40 per tonne for each metric ton of asphalt concrete placed. This unit price constitutes full and final compensation for all additional costs to be incurred, including all markups, due to all Department changes and delays to the work.

Compensation provided under this unit price adjustment is based on furnishing OGAC at a cost of $89.00 per US ton, excluding sales tax and transportation to the jobsite, based on a liquid asphalt price of $615.00 per US ton for Polymer Modified PG58-34PM Oil Asphalt Concrete. In the event of a change in the actual cost of liquid asphalt by $50.00 per US ton (up or down), an adjustment of compensation shall be made to account for any increased or decreased cost of furnishing the OGAC. Any necessary adjustment shall be made through a supplement to this change order.

Estimated Cost of Adjustment of Compensation at Agreed Unit Price $137,310.00

Adjustment of Compensation at Lump Sum:

Provide compensation to the Contractor for all additional costs associated with the design and construction of the expansion dams at Bent 49 and 50 as specified under this change order. For this work, the Contractor will be compensated a lump sum of $150,650.00. This sum constitutes full and final compensation for all additional costs to be incurred, including all markups, due to all Department delays to the work.

CONTRACT CHANGE ORDER

Change Requested by: Engineer

CCO 82	Suppl. No. 0	Contract No. 04 - 0120R4	Road SF-80-12.6/13.2	FED. AID LOC.: ACBRIM-080-1(097)N

Provide compensation to the Contractor for all costs associated with the additional mobilization and demobilization of all resources pertaining to the placement of the asphalt concrete wearing surface on the Viaduct due to all Department delays and changes to the work. For this work, the Contractor will be compensated a lump sum of $17,220.00. This sum constitutes full and final compensation for all additional costs to be incurred, including all markups, due to all Department changes and delays to the work.

The Contractor shall provide a credit to the Department for their as-planned costs pertaining to meeting the tolerances of the Viaduct wearing surfaces as specified under Section 39-6.03 "Compacting" of the Standard Specifications. For this work, the Contractor shall credit the Department a lump sum of $7,500.00.

Total Cost of Adjustment of Compensation at Lump Sum $160,370.00

RECEIVED
OCT 30 2009
08

Estimated Cost: Increase ☑ Decrease ☐ **$547,680.00**

By reason of this order the time of completion will be adjusted as follows: 0 days

Submitted by

Signature	Resident Engineer	Date
	BILL CASEY	8-6-09

Approval Recommended by

Signature	Area Construction Manager	Date
Deanna Vilcheck	DEANNA VILCHECK	8/6/09

Engineer Approval by

Signature	Area Construction Manager	Date
Deanna Vilcheck	DEANNA VILCHECK	10/7/09

We the undersigned contractor, have given careful consideration to the change proposed and agree, if this proposal is approved, that we will provide all equipment, furnish the materials, except as may otherwise be noted above, and perform all services necessary for the work above specified, and will accept as full payment therefor the prices shown above.

NOTE: If you, the contractor, do not sign acceptance of this order, your attention is directed to the requirements of the specifications as to proceeding with the ordered work and filing a written protest within the time therein specified.

Contractor Acceptance by

Signature	(Print name and title)	Date
	DANIEL E. Humick, PRESIDENT	10/02/09

Amendments to Section 92, "Asphalts," of the Standard Specifications

SECTION 92: ASPHALTS

Issue Date: November 3, 2006

Section 92, "Asphalts," of the Standard Specifications is amended to read:

92-1.01 DESCRIPTION

- Asphalt is refined petroleum or a mixture of refined liquid asphalt and refined solid asphalt that are prepared from crude petroleum. Asphalt is:
  1. Free from residues caused by the artificial distillation of coal, coal tar, or paraffin
  2. Free from water
  3. Homogeneous

92-1.02 MATERIALS

GENERAL

- Furnish asphalt under the Department's "Certification Program for Suppliers of Asphalt." The Department maintains the program requirements, procedures, and a list of approved suppliers at:

  http://www.dot.ca.gov/hq/esc/Translab/fpmcoc.htm

- Transport, store, use, and dispose of asphalt safely.
- Prevent the formation of carbonized particles caused by overheating asphalt during manufacturing or construction.

GRADES

- Performance graded (PG) asphalt binder is:

CONTRACT NO. 04-0120R4

CONTRACT CHANGE ORDER NO 82

SHEET 3 OF 6

Performance Graded Asphalt Binder

Property	AASHTO Test Method	Specification Grade PG 58-22 [a]	PG 64-10	PG 64-16	PG 64-28	PG 70-10
Original Binder						
Flash Point, Minimum °C	T 48	230	230	230	230	230
Solubility, Minimum % [b]	T 44	99	99	99	99	99
Viscosity at 135°C, [c] Maximum, Pa·s	T 316	3.0	3.0	3.0	3.0	3.0
Dynamic Shear, Test Temp. at 10 rad/s, °C	T 315	58	64	64	64	70
Minimum G*/sin(delta), kPa		1.00	1.00	1.00	1.00	1.00
RTFO Test, [e] Mass Loss, Maximum, %	T 240	1.00	1.00	1.00	1.00	1.00
RTFO Test Aged Binder						
Dynamic Shear, Test Temp. at 10 rad/s, °C	T 315	58	64	64	64	70
Minimum G*/sin(delta), kPa		2.20	2.20	2.20	2.20	2.20
Ductility at 25°C Minimum, cm	T 51	75	75	75	75	75
PAV [f] Aging, Temperature, °C	R 28	100	100	100	100	110
RTFO Test and PAV Aged Binder						
Dynamic Shear, Test Temp. at 10 rad/s, °C	T 315	22 [d]	31 [d]	28 [d]	22 [d]	34 [d]
Maximum G*/sin(delta), kPa		5000	5000	5000	5000	5000
Creep Stiffness, Test Temperature, °C	T 313	-12	0	-6	-18	0
Maximum S-value, Mpa		300	300	300	300	300
Minimum M-value		0.300	0.300	0.300	0.300	0.300

Notes:

a. Use as asphalt rubber base stock for high mountain and high desert area.
b. The Engineer waives this specification if the supplier is a Quality Supplier as defined by the Department's "Certification Program for Suppliers of Asphalt."
c. The Engineer waives this specification if the supplier certifies the asphalt binder can be adequately pumped and mixed at temperatures meeting applicable safety standards.
d. Test the sample at 3°C higher if it fails at the specified test temperature. G*sin(delta) remains 5000 kPa maximum.
e. "RTFO Test" means the asphaltic residue obtained using the Rolling Thin Film Oven Test, AASHTO Test Method T 240 or ASTM Designation: D 2872. The residue from mass change determination may be used for other tests.
f. "PAV" means Pressurized Aging Vessel.

- Performance graded polymer modified asphalt binder (PG Polymer Modified) is:

CONTRACT NO. 04-0120R4

CONTRACT CHANGE ORDER NO 82

SHEET 4 OF 6

Performance Graded Polymer Modified Asphalt Binder [a]

Property	AASHTO Test Method	Specification Grade		
		PG 58-34 PM	PG 64-28 PM	PG 76-22 PM
Original Binder				
Flash Point, Minimum °C	T 48	230	230	230
Solubility, Minimum % [b]	T 44[c]	98.5	98.5	98.5
Viscosity at 135°C, [d] Maximum, Pa·s	T 316	3.0	3.0	3.0
Dynamic Shear, Test Temp. at 10 rad/s, °C	T 315	58	64	76
Minimum G*/sin(delta), kPa		1.00	1.00	1.00
RTFO Test , Mass Loss, Maximum, %	T 240	0.60	0.60	0.60
RTFO Test Aged Binder				
Dynamic Shear, Test Temp. at 10 rad/s, °C	T 315	58	64	76
Minimum G*/sin(delta), kPa		2.20	2.20	2.20
Dynamic Shear, Test Temp. at 10 rad/s, °C	T 315	Note e	Note e	Note e
Maximum (delta), %		80	80	80
Elastic Recovery[f], Test Temp., °C	T 301	25	25	25
Minimum recovery, %		75	75	65
PAV[g] Aging, Temperature, °C	R 28	100	100	110
RTFO Test and PAV Aged Binder				
Dynamic Shear, Test Temp. at 10 rad/s, °C	T 315	16	22	31
Maximum G*sin(delta), kPa		5000	5000	5000
Creep Stiffness, Test Temperature, °C	T 313	-24	-18	-12
Maximum S-value, MPa		300	300	300
Minimum M-value		0.300	0.300	0.300

Notes:

a. Do not modify PG Polymer Modified using acid modification.

b. The Engineer waives this specification if the supplier is a Quality Supplier as defined by the Department's "Certification Program for Suppliers of Asphalt."

c. The Department allows ASTM D 5546 instead of AASHTO T 44

d. The Engineer waives this specification if the supplier certifies the asphalt binder can be adequately pumped and mixed at temperatures meeting applicable safety standards.

e. Test temperature is the temperature at which G*/sin(delta) is 2.2 kPa. A graph of log G*/sin(delta) plotted against temperature may be used to determine the test temperature when G*/sin(delta) is 2.2 kPa. A graph of (delta) versus temperature may be used to determine delta at the temperature when G*/sin(delta) is 2.2 kPa. The Engineer also accepts direct measurement of (delta) at the temperature when G*/sin(delta) is 2.2 kPa.

f. Tests without a force ductility clamp may be performed.

g. "PAV" means Pressurized Aging Vessel.

SAMPLING

- Provide a sampling device in the asphalt feed line connecting the plant storage tanks to the asphalt weighing system or spray bar. Make the sampling device

accessible between 600 and 750 mm above the platform. Provide a receptacle for flushing the sampling device.

- Include with the sampling device a valve:
  1. Between 10 and 20 mm in diameter
  2. Manufactured in a manner that a one-liter sample may be taken slowly at any time during plant operations
  3. Maintained in good condition

- Replace failed valves.
- In the Engineer's presence, take 2 one-liter samples per operating day. Provide round, friction top, one-liter containers for storing samples.

92-1.03 EXECUTION

- If asphalt is applied, you must comply with the heating and application specifications for liquid asphalt in Section 93, "Liquid Asphalts."

92-1.04 MEASUREMENT

- If the contract work item for asphalt is paid by mass, the Department measures asphalt tonnes by complying with the specifications for mass determination of liquid asphalt in Section 93, "Liquid Asphalts."
- The Engineer determines the asphalt mass from volumetric measurements if you:
  1. Use a partial asphalt load.
  2. Use asphalt at a location other than a mixing plant and no scales within 35 km are available and suitable.
  3. Deliver asphalt in either of the following:
     3.1. A calibrated truck with each tank accompanied by its measuring tick and calibration card.
     3.2. A truck equipped with a calibrated thermometer that determines the asphalt temperature at the delivery time and with a vehicle tank meter complying with the specifications for weighing, measuring, and metering devices in Section 9-1.01, "Measurement of Quantities."

- If you furnish asphalt concrete from a mixing plant producing material for only one project, the Engineer determines the asphalt quantity by measuring the volume in the tank at the project's start and end provided the tank is calibrated and equipped with its measuring stick and calibration card.

- The Engineer determines pay quantities from volumetric measurements as follows:
  1. Before converting the volume to mass, the Engineer reduces the measured volume to that which the asphalt would occupy at 15°C.
  2. The Engineer uses 981 L/tonne and 1020 g/L for the average mass and volume for PG and PG Polymer Modified asphalt grades at 15°C.
  3. The Engineer uses the Conversion Table in Section 93, "Liquid Asphalts."

CONTRACT NO. 04-0120R4

CONTRACT CHANGE ORDER NO 82

SHEET 6 OF 6

STATE OF CALIFORNIA - DEPARTMENT OF TRANSPORTATION

CONTRACT CHANGE ORDER MEMORANDUM

TO: MIKE FORNER / DEANNA VILCHECK	FILE: **E.A.** 04 - 0120R4
FROM: BILL CASEY	**CO-RTE-PM** SF-80-12.6/13.2
	FED. NO. ACBRIM-080-1(097)N
CCO#: **82** SUPPLEMENT#: **0** Category Code: **CJSA**	CONTINGENCY BALANCE (incl. this change) **$25,472,027.59**
COST: **$547,680.00** INCREASE ☑ DECREASE ☐	HEADQUARTERS APPROVAL REQUIRED? ☑ YES ☐ NO
SUPPLEMENTAL FUNDS PROVIDED: **$0.00**	IS THIS REQUEST IN ACCORDANCE WITH ENVIRONMENTAL DOCUMENTS? ☑ YES ☐ NO
CCO DESCRIPTION: Viaduct OGAC & Expansion Dams	**PROJECT DESCRIPTION:** CONSTRUCT ROUTE 80 TEMP BYPASS STRUCTURE

Original Contract Time:	Time Adj. This Change:	Previously Approved CCO Time Adjustments:	Percentage Time Adjusted: (including this change)	Total # of Unreconciled Deferred Time CCO(s): (including this change)
475 Day(s)	**0** Day(s)	**1195** Day(s)	**252** %	**7**

THIS CHANGE ORDER PROVIDES FOR:

Revisions to the specified wearing surface of the upper and lower decks of the Viaduct structure.

This contract calls for the construction of a temporary detour for both eastbound and westbound I-80 traffic that allows for the tie in of the east span of the new San Francisco Oakland Bay Bridge (SFOBB) to Yerba Buena Island. The detour consist of three main structures, the east tie-in (ETI) to the bridge, the west tie-in (WTI) to the island and the Viaduct structure between the two. The contract was awarded as a performance based project with the contractor responsible for meeting the design criteria specified in the contract.

The Viaduct consists of 4 spans of a double deck steel truss approximately 20 meters wide and 320 meters long with a weight of over 4,300 metric tons. This change order specifies that open graded asphalt concrete (OGAC) be placed in lieu of the Contractor's planned placement of dense grade asphalt concrete (AC) to improve the drainage characteristics of the structure and calls for the design and construction of 8 expansion dams at the joints located at Bent 49 and 50 of the structure in order to avoid spalling of the asphalt at these joints. These changes have been requested by Project Development.

As the Viaduct remains a performance based structure with the Contractor responsible for the design, the Contractor shall design the expansion dams as approved by the Engineer and then construct that approved design. The work includes the design and construction of 8 separate expansions dams each approximately 0.3 meters wide, 32 meters long and 80 millimeters deep and requires the removal of the existing concrete deck to a depth of approximately 50 millimeters.

The placement of OGAC in lieu of dense grade AC will reduce the Contractor's productivity as the material is typically more difficult to work with. The change order also addresses escalation costs associated with the placement of the wearing surface and additional mobilization costs to be incurred due to the approximate 4 and a half year Department-caused delay to the project.

The placement of OGAC in lieu of dense grade AC will also result in additional grinding costs associated with meeting the specified roadway surface tolerances. The Contractor's as-planned work associated with this grinding would be to place the dense grade AC wearing surface and then perform bump grinding where that surface failed to meet the specification. As grinding of OGAC is problematic, the Contractor is now being ordered to grind the top of the concrete deck prior to the placement of the wearing surface. This will result in considerably more grinding than the as-planned work. Additionally, this work also has incurred considerable escalation costs due to the 4 and a half year Department-caused delay to the project.

Compensation for the design and construction of the expansion dams shall be paid as an adjustment of compensation at an agreed lump sum of $150,650.00. Compensation for the additional mobilization costs pertaining to the placement of the OGAC shall be paid as an adjustment of compensation at an agreed lump sum of $17,220.00. Compensation for the additional costs pertaining to the actual placement of the OGAC shall be paid as an adjustment of compensation at an agreed unit price of $119.40 per tonne at an estimated cost of $137,310.00. The Contractor shall provide a credit to the Department for their as-planned AC grinding costs as an adjustment of compensation at a lump sum credit of $7,500.00. The actual concrete deck grinding costs shall be paid as extra work at force account at an estimated cost of $250,000.00.

The total estimated change order cost of $547,680.00 shall be financed from the contract's contingency funds. A cost estimate is on file.

ADA Notice: For individuals with sensory disabilities, this document is available in alternate formats. For information call: (916) 654-6410 or TDD (916) 654-3880 or write Records and Forms Management, 1120 N Street, MS-89, Sacramento, CA 95814.

The change order also provides for an adjustment in compensation for any significant increase or decrease in the cost of furnishing asphalt concrete based on the quoted price at the time this change order was agreed negotiated. No asphalt concrete price adjustment was included under the original contract. This adjustment, if necessary, shall be made under a supplemental change order.

No adjustment of contract time is warranted as this change will not affect the controlling operation.

This change was concurred with by Alec Melkonians - Asst. Project Manager, Hong Wong - Project Engineer, and Lina Ellis - Maintenance.

FHWA concurrence is not required as they are no longer providing funds for this project.

CONCURRED BY:			
Construction Engineer:	Bill Casey, Resident Engineer	Date	9-6-09
Bridge Engineer:		Date	
Project Engineer:	Hong Wong, PE	Date	7/13/09
Project Manager:	Alec Melkonians	Date	7/9/09
FHWA Rep.:		Date	
Environmental:		Date	
Other (specify):	Lina Ellis, Maintenance	Date	
Other (specify):		Date	
District Prior Approval By:		Date	
HQ (Issue Approve) By:	Bob Molera, HQ CCO Engineer	Date	9-10-09
Resident Engineer's Signature:		Date	9-6-09

ESTIMATE OF COST		
	THIS REQUEST	TOTAL TO DATE
ITEMS	$0.00	$0.00
FORCE ACCOUNT	$250,000.00	$250,000.00
AGREED PRICE	$0.00	$0.00
ADJUSTMENT	$297,680.00	$297,680.00
TOTAL	$547,680.00	$547,680.00

FEDERAL PARTICIPATION

☐ PARTICIPATING ☐ PARTICIPATING IN PART ☑ NONE
☐ NON-PARTICIPATING (MAINTENANCE) ☐ NON-PARTICIPATING

FEDERAL SEGREGATION (if more than one Funding Source or P.I.P. type)
☐ CCO FUNDED PER CONTRACT ☐ CCO FUNDED AS FOLLOWS

FEDERAL FUNDING SOURCE	PERCENT

ADA Notice: For individuals with sensory disabilities, this document is available in alternate formats. For information call: (916) 654-6410 or TDD (916) 654-3880 or write Records and Forms Management, 1120 N Street, MS-89, Sacramento, CA 95814.

STATE OF CALIFORNIA - DEPARTMENT OF TRANSPORTATION

CONTRACT CHANGE ORDER

Change Requested by: Engineer

CCO 82	Suppl. No. 1	Contract No. 04 - 0120R4	Road SF-80-12.6/13.2	FED. AID LOC.:

To: **CC MYERS INC**

You are directed to make the following changes from the plans and specifications or do the following described work not included in the plans and specifications for this contract. ***NOTE: This change order is not effective until approved by the Engineer.***

Description of work to be done, estimate of quantities and prices to be paid. (Segregate between additional work at contract price, agreed price and force account.) Unless otherwise stated, rates for rental of equipment cover only such time as equipment is actually used and no allowance will be made for idle time. This last percentage shown is the net accumulated increase or decrease from the original quantity in the Engineer's Estimate.

Extra Work at Force Account:

Provide additional funds for performing all grinding of the upper and lower decks of the Viaduct as specified under Contract Change Order 82 - Supplement 0, and as authorized by the Engineer.

Estimated Cost of Extra Work at Force Account $120,000.00

RECEIVED
DEC 14 2009
10

Estimated Cost: Increase ☑ Decrease ☐ **$120,000.00**

By reason of this order the time of completion will be adjusted as follows: 0 days

Submitted by		
Signature	**Resident Engineer** BILL CASEY	**Date** 12-11-09
Approval Recommended by		
Signature Deanna Vilcheck	**Area Construction Manager** DEANNA VILCHECK	**Date** 12/14/09
Engineer Approval by		
Signature Deanna Vilcheck	**Area Construction Manager** DEANNA VILCHECK	**Date** 12/17/09

We the undersigned contractor, have given careful consideration to the change proposed and agree, if this proposal is approved, that we will provide all equipment, furnish the materials, except as may otherwise be noted above, and perform all services necessary for the work above specified, and will accept as full payment therefor the prices shown above.

NOTE: If you, the contractor, do not sign acceptance of this order, your attention is directed to the requirements of the specifications as to proceeding with the ordered work and filing a written protest within the time therein specified.

Contractor Acceptance by		
Signature N/A	**(Print name and title)** N/A	**Date** N/A

STATE OF CALIFORNIA - DEPARTMENT OF TRANSPORTATION

CONTRACT CHANGE ORDER MEMORANDUM

TO: MIKE FORNER / DEANNA VILCHECK	FILE: E.A. 04 - 0120R4
FROM: BILL CASEY	CO-RTE-PM SF-80-12.6/13.2
	FED. NO.
CCO#: 82 SUPPLEMENT#: 1 Category Code: CJSA	CONTINGENCY BALANCE (incl. this change) $44,628,125.59
COST: $120,000.00 INCREASE ☑ DECREASE ☐	HEADQUARTERS APPROVAL REQUIRED? ☑ YES ☐ NO
SUPPLEMENTAL FUNDS PROVIDED: $0.00	IS THIS REQUEST IN ACCORDANCE WITH ENVIRONMENTAL DOCUMENTS? ☑ YES ☐ NO
CCO DESCRIPTION: Add Funds VIA OGAC & Expansion Dams	**PROJECT DESCRIPTION:** CONSTRUCT ROUTE 80 TEMP BYPASS STRUCTURE

Original Contract Time:	Time Adj. This Change:	Previously Approved CCO Time Adjustments:	Percentage Time Adjusted: (including this change)	Total # of Unreconciled Deferred Time CCO(s): (including this change)
475 Day(s)	0 Day(s)	1600 Day(s)	337 %	0

THIS CHANGE ORDER PROVIDES FOR:

...additional funds for performing all grinding of the upper and lower decks of the Viaduct.

This contract calls for the construction of a temporary detour for both eastbound and westbound I-80 traffic that allows for the tie in of the east span of the new San Francisco Oakland Bay Bridge (SFOBB) to Yerba Buena Island. The detour consist of three main structures, the east tie-in (ETI) to the bridge, the west tie-in (WTI) to the island and the Viaduct structure between the two. The contract was awarded as a performance based project with the contractor responsible for meeting the design criteria specified in the contract.

The Viaduct consists of 4 spans of a double deck steel truss approximately 20 meters wide and 320 meters long with a weight of over 4,300 metric tons. Contract Change Order 82, Supplement 0 specified that open graded asphalt concrete (OGAC) be placed in lieu of the Contractor's planned placement of dense grade asphalt concrete (AC) to improve the drainage characteristics of the structure.

The placement of OGAC in lieu of dense grade AC resulted in additional grinding costs associated with meeting the specified roadway surface tolerances. The Contractor's as-planned work associated with this grinding was to place the dense grade AC wearing surface and then perform bump grinding where that surface failed to meet the specification. As grinding of OGAC is problematic, the Contractor was ordered to grind the top of the concrete deck prior to the placement of the wearing surface. This resulted in considerably more grinding than the as-planned work.

Compensation for concrete deck grinding costs shall be paid as extra work at force account for an estimated cost of $120,000.00 and shall be financed from the contract's contingency funds. A cost estimate is on file.

No adjustment of contract time is warranted as this change will not affect the controlling operation.

The Contractor's signature is not required for additional funds for Extra Work at Force Account change orders. Therefore this change order is being issued unilaterally.

This change was concurred with by Alec Melkonians - Asst. Project Manager and Minh B. Nguyen - Project Engineer,

ADA Notice: For individuals with sensory disabilities, this document is available in alternate formats. For information call (916) 654-6410 or TDD (916) 654-3880

CONCURRED BY:		
Construction Engineer:	Bill Casey, Resident Engineer	Date 12-11-09
Bridge Engineer:		Date
Project Engineer:	Minh B. Nguyen, PE	Date 12-2-09
Project Manager:	Alec Melkonians	Date 12-1-09
FHWA Rep.:		Date
Environmental:		Date
Other (specify):		Date
Other (specify):		Date
District Prior Approval By:		Date
HQ (Issue Approve) By:	Bob Molera, HQ CCO Engineer	Date 12-17-09
Resident Engineer's Signature:		Date

12-11-09

ESTIMATE OF COST

	THIS REQUEST	TOTAL TO DATE
ITEMS	$0.00	$0.00
FORCE ACCOUNT	$120,000.00	$370,000.00
AGREED PRICE	$0.00	$0.00
ADJUSTMENT	$0.00	$297,680.00
TOTAL	$120,000.00	$667,680.00

FEDERAL PARTICIPATION

☐ PARTICIPATING ☐ PARTICIPATING IN PART ☑ NONE
☐ NON-PARTICIPATING (MAINTENANCE) ☐ NON-PARTICIPATING

FEDERAL SEGREGATION (if more than one Funding Source or P.I.P. type)
☐ CCO FUNDED PER CONTRACT ☐ CCO FUNDED AS FOLLOWS

FEDERAL FUNDING SOURCE	PERCENT

ADA Notice: For individuals with sensory disabilities, this document is available in alternate formats. For information call: (916) 654-6410 or TDD (916) 654-3880 or write

STATE OF CALIFORNIA - DEPARTMENT OF TRANSPORTATION

CONTRACT CHANGE ORDER

Change Requested by: Engineer

CCO: 82	Suppl. No. 2	Contract No. 04 - 0120R4	Road SF-80-12.6/13.2	FED. AID LOC.:

To: **CC MYERS INC**

You are directed to make the following changes from the plans and specifications or do the following described work not included in the plans and specifications for this contract. ***NOTE: This change order is not effective until approved by the Engineer.***

Description of work to be done, estimate of quantities and prices to be paid. (Segregate between additional work at contract price, agreed price and force account.) Unless otherwise stated, rates for rental of equipment cover only such time as equipment is actually used and no allowance will be made for idle time. This last percentage shown is the net accumulated increase or decrease from the original quantity in the Engineer's Estimate.

Extra Work at Force Account:

Provide additional funds for the work specified to be performed at force account under the original Change Order No. 82 and as determined by the Engineer.

Estimated cost of Extra Work at Force Account $35,000.00

Estimated Cost: **Increase** ☑ **Decrease** ☐ **$35,000.00**

By reason of this order the time of completion will be adjusted as follows: 0 days

Submitted by

Signature	Resident Engineer	Date
J/Balderramos	JEANNIE BALDERRAMOS	9-27-10

Approval Recommended by

Signature	Area Construction Manager	Date
Michael Fournier for	DEANNA VILCHECK	9-27-10

Engineer Approval by

Signature	Area Construction Manager	Date
Deanna Vilcheck	DEANNA VILCHECK	10/7/10

We the undersigned contractor, have given careful consideration to the change proposed and agree, if this proposal is approved, that we will provide all equipment, furnish the materials, except as may otherwise be noted above, and perform all services necessary for the work above specified, and will accept as full payment therefor the prices shown above.

NOTE: If you, the contractor, do not sign acceptance of this order, your attention is directed to the requirements of the specifications as to proceeding with the ordered work and filing a written protest within the time therein specified.

Contractor Acceptance by

Signature	(Print name and title)	Date
NOT REQUIRED		

CONTRACT CHANGE ORDER

Change Requested by: Engineer

CCO 84	Suppl. No. 0	Contract No. 04 - 0120R4	Road SF-80-12.6/13.2	FED. AID LOC.: ACBRIM-080-1(097)N

To: **CC MYERS INC**

You are directed to make the following changes from the plans and specifications or do the following described work not included in the plans and specifications for this contract. ***NOTE: This change order is not effective until approved by the Engineer.***

Description of work to be done, estimate of quantities and prices to be paid. (Segregate between additional work at contract price, agreed price and force account.) Unless otherwise stated, rates for rental of equipment cover only such time as equipment is actually used and no allowance will be made for idle time. This last percentage shown is the net accumulated increase or decrease from the original quantity in the Engineer's Estimate.

Extra Work at Lump Sum:

Construct temporary support columns and temporary skid track foundations necessary to move the permanent superstructure of the Yerba Buena Tunnel (Bridge No. 33-004) concrete viaduct from Bent 38 to Bent 48 into its ultimate location. Work for this change order shall conform to approved submittals #137 and #143, (YBI Viaduct Replacement Skid Foundation Design, dated May 2, 2007, and YBI Viaduct Replacement Skid Foundation Design Track H - Elevated, Revised, dated May 24, 2007).

The work shall include the following items:

1) Construct 14 each CIDH piles of 1.2m and one CIDH pile 1.8m in diameter as shown on Sheet 4 of this change order, plan sheet "West Tie-in Phase 1 YBI Viaduct Replacement CIDH Pile Details", dated 6/18/07.

2) Construct 15 each, temporary support columns needed to support the superstructure while removing the falsework and installing the rolling skids, as shown on Sheet 3 of this change order, plan sheet "West Tie-in Phase 1 YBI Viaduct Replacement CIDH Pile Details", dated 6/18/07.

3) Construct eight (8) each, foundations for temporary skid tracks used to support the rolling skids while moving the superstructure into position in the work.

4) Remove and dispose of all material for 15 each temporary columns constructed in item 2) above.

5) Remove and dispose of all material for 8 each skid track foundations constructed in item 3) above, outside the limits of the elevated roadbed for interstate 80. The portion of the skid track foundations within the I-80 roadbed shall be left in place. Remove and dispose of the portion of Skid Track "H" that crosses the I-80 Eastbound On-Ramp and restore the ramp pavement to its original condition. Specifications for the "Fast Setting Hydraulic Cement Concrete" to be used in the roadbed are attached on Sheet 3 of this change order.

6) Abandon in place 15 each CIDH piles constructed for item 1, above, and remove and dispose of the tops of piles to 300mm below finish grade.

For this work, the Contractor will be paid the agreed lump sum price of $3,980,000.00. This lump sum constitutes full compensation, including markups, for the work of this change.

Total Cost of Extra Work at Lump Sum $3,980,000.00

CONTRACT CHANGE ORDER

Change Requested by: Engineer

CCO 84	Suppl. No. 0	Contract No. 04 - 0120R4	Road SF-80-12.6/13.2	FED. AID LOC.: ACBRIM-080-1(097)N

Estimated Cost: Increase ☑ Decrease ☐ **$3,980,000.00**

By reason of this order the time of completion will be adjusted as follows: 0 days

Submitted by

Signature M. U. Anigol	Resident Engineer MAHANTESH ANIGOL	Date 7/20/07

Approval Recommended by

Signature Michael Forner	Area Construction Manager MIKE FORNER	Date 7/20/07

Engineer Approval by

Signature	SFOBB Construction Manager MIKE FORNER	Date

We the undersigned contractor, have given careful consideration to the change proposed and agree, if this proposal is approved, that we will provide all equipment, furnish the materials, except as may otherwise be noted above, and perform all services necessary for the work above specified, and will accept as full payment therefor the prices shown above.

NOTE: If you, the contractor, do not sign acceptance of this order, your attention is directed to the requirements of the specifications as to proceeding with the ordered work and filing a written protest within the time therein specified.

Contractor Acceptance by

Signature	(Print name and title) L.J. Clifford, CFO	Date 7/30/07

Attachment: Specification for Fast Setting Hydraulic Cement Concrete

FAST SETTING HYDRAULIC CEMENT CONCRETE

General

Fast Setting Hydraulic Cement Concrete (FSHCC) shall be a concrete made with hydraulic cement that develops opening age and 7-day specified modulus of rupture strengths.
Requirements of Section 90-1.01, "Description," of the Standard Specifications shall not apply to FSHCC.
Combined aggregate grading used in FSHCC shall be either the 37.5-mm, maximum grading, or 25-mm, maximum grading, at the option of the Contractor.

Cement for FSHCC shall be hydraulic cement as defined in ASTM Designation: C 219 and shall conform to the following requirements:

Test Description	Test Method	Requirement
Contraction in Air	California Test 527,W/C Ratio = 0.39 ± 0.010	0.053 %, max.
Mortar Expansion in Water	ASTM Designation: C 1038	0.04 %, max.
Soluble Chloride*	California Test 422	0.05 %, max.
Soluble Sulfates*	California Test 417	0.30 %, max.
Thermal Stability	California Test 553	60 %, min.
Compressive Strength @ 3 days	ASTM Designation: C 109	17 MPa

*Test is to be done on a cube specimen, fabricated in conformance with the requirements in ASTM Designation: C 109, cured at least 14 days and then pulverized to 100% passing the 300-□m sieve

The Contractor shall furnish a sample of cement from each lot proposed for use and all admixtures proposed for use in the quantities ordered by the Engineer.
The Contractor shall submit uniformity reports for cement used in FSHCC to the Engineer. Uniformity reports shall conform to the requirements in ASTM Designation: C 917, except that testing age and water content may be modified to suit the particular material.

Compressive strength trial batch shall conform to Section 90-9, "Concrete, Compressive Strength" of the Standard Specifications.
Concrete shall be tested at the predetermined time for required strength.
Traffic will not be allowed on the concrete until it reaches the specified strength.
Concrete may be made using Volumetric Batching and Continuous Mixing in accordance with ASTM C 685-95a.

Pre-Operation Conference
The Contractor and subcontractors involved in construction operations of FSHCC shall meet with the Engineer at a pre-operation conference, at a mutually agreed time, to discuss methods of accomplishing all phases of the construction operation, contingency planning, and standards of workmanship for the completed item of work.

CONTRACT NO. 04-0120R4

☐ APPROVED
☒ APPROVED AS NOTED
☐ NOT APPROVED

Pursuant to Section 5-1.02 of the Standard Specifications
State of California
DEPARTMENT OF TRANSPORTATION
Division of Structures
Office of Structure Construction
Signed Carlos Longoria
Structure Representative
Date 6/22/07

CONTRACT CHANGE ORDER NO 84

SHEET 4 OF 4

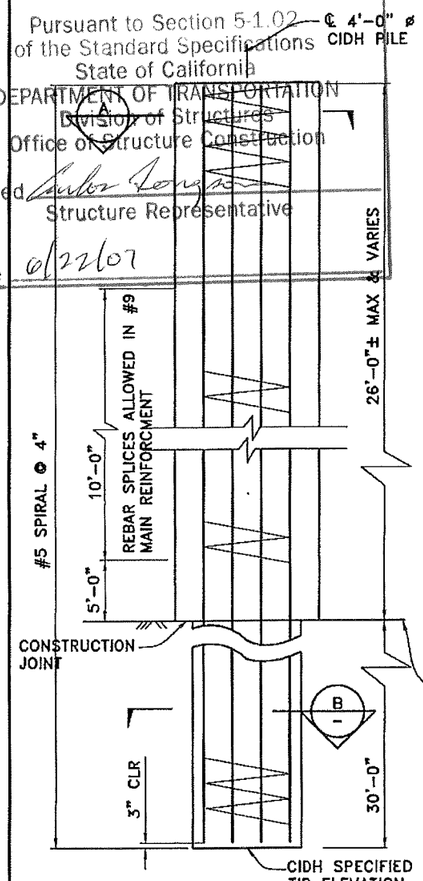

TEMPORARY BENT BETWEEN BENT 39 AND 41
ELEVATION
NO SCALE

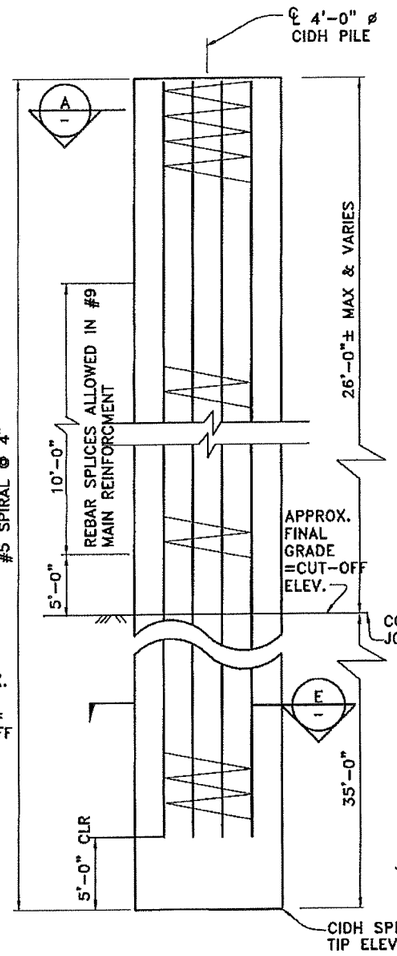

TEMPORARY BENTS
42L&R 43L&R AND 44L
ELEVATION
NO SCALE

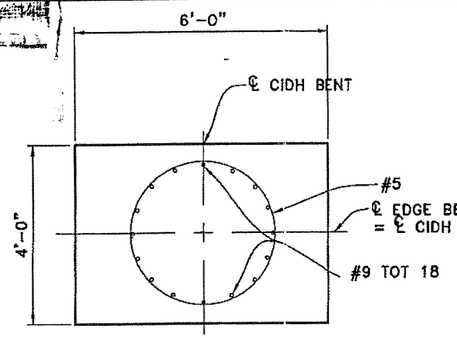

BENTS
39 LT & RT, 40 LT & RT,
41 LT, 42 LT & RT,
43 LT, 43R, 44 LT
SECTION A–A
NO SCALE

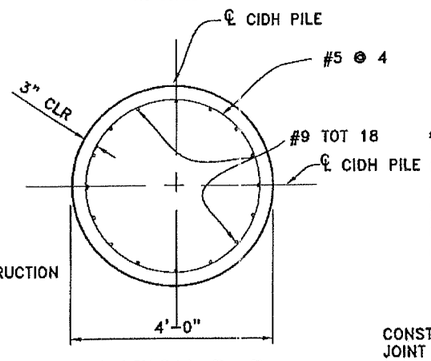

SECTION B--B,
SECTION A–A BENT
41A & 41B ONLY
NO SCALE

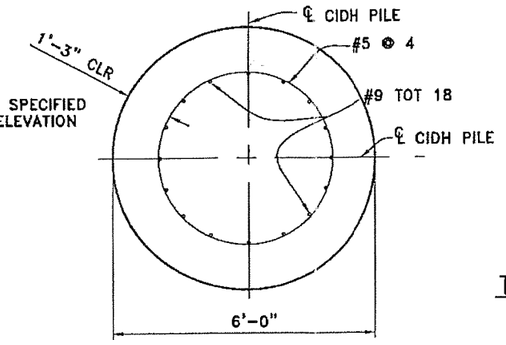

SECTION E--E,
BENTS 42L&R, 43L&R, 44L
NO SCALE

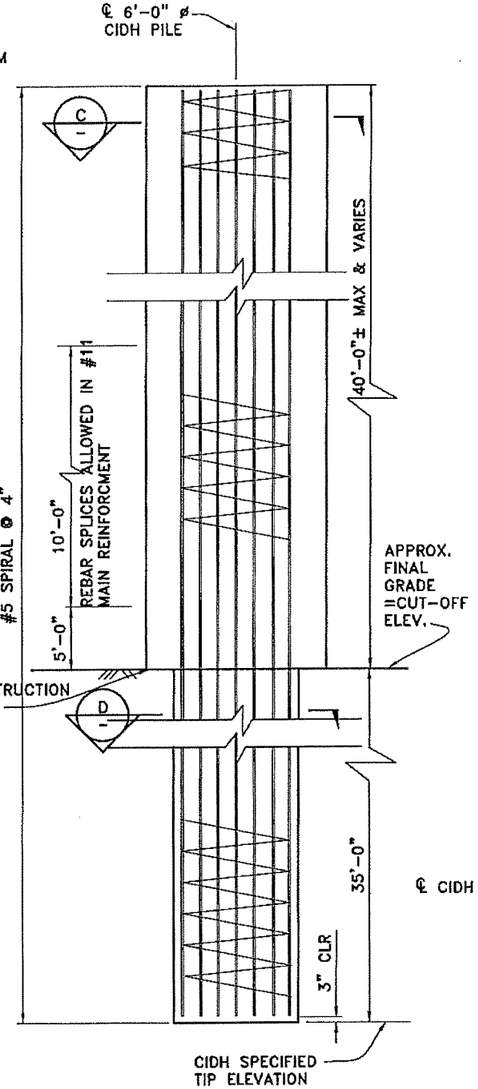

TEMPORARY BENT BETWEEN BENT
44RT
ELEVATION
NO SCALE

BENT	NOMINAL RESISTANCE COMPRESSION
39 L & R	4500 KN
40 L & R	4500 KN
41 L & 41R(A&B)	4500 KN
42 L & R	4500 KN
43 L & TEMPORARY BENT 43 R	4500 KN
44 L & 44 R	4500 KN

NOTE: MAXIMUM LATERAL LOADING = 35 KN

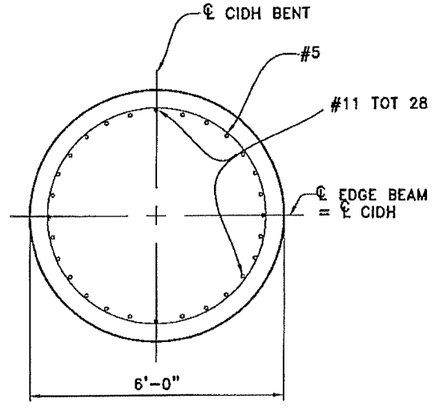

SECTION C–C
NO SCALE

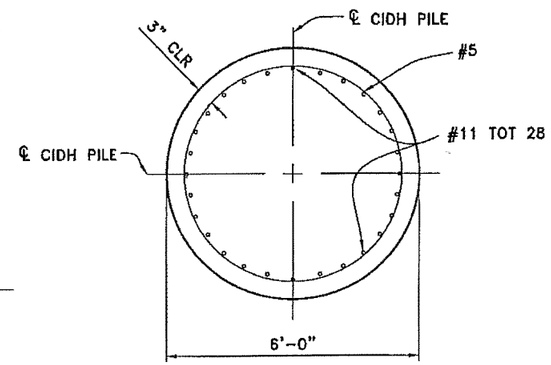

SECTION D–D
NO SCALE

NOTES:
1. CIDH PILES CONCRETE STRENGTH: fy = 60,000 PSI
f'c = 3,500 PSI

NO.	DATE	REVISION	BY
1	5/17/07	REVISED PLANS PER CALTRANS COMMENTS	MK
2	5/23/07	REVISED PLANS PER C.C. MYERS REQUEST	MK
3	6/18/07	REVISED PLANS PER CALTRANS COMMENTS	MK

	BY	CHECKED
DESIGNED	M. KANAAN	T. ZOKAIE
DRAWN	STAFF	T. ZOKAIE
QUANTITIES	STAFF	T. ZOKAIE

APPROVED BY DATE

MAZEN M. KANAAN No. 3630 EXP. 12-31-07 CIVIL STATE OF CALIFORNIA
6/18/07

ADK Engineering
400 PLAZA DRIVE
SUITE 125
FOLSOM, CA 95630
(916) 294-0059
(916) 294-0875 (FAX)

CC MYERS INC
3286 FITZGERALD ROAD
RANCHO CORDOVA, CA 95742
(916) 635-9370

WEST TIE–IN PHASE 1
YBI VIADUCT REPLACEMENT
CIDH PILE DETAILS

DRAWING — SHEET 21 OF TOTAL 21
REVISION

U:\C.C. Myers\YBI\Mazen\Dwg\PART 1\10-21-CIDH DETAILS.dwg Jun 19, 2007-11:42 am

STATE OF CALIFORNIA - DEPARTMENT OF TRANSPORTATION

CONTRACT CHANGE ORDER MEMORANDUM

DATE: 7/20/2007 RECEIVED Page 1 of 1

TO: MIKE FORNER / DENNIS TURCHON	FILE: **E.A.** 04 - 0120R4
	CO-RTE-PM SF-80-12.6/13.2 006282 AUG-86
FROM: MAHANTESH ANIGOL	**FED. NO.** ACBRIM-080-1(097)N
CCO#: **84** SUPPLEMENT#: **0** Category Code: **CHPA**	CONTINGENCY BALANCE (incl. this change) **$27,479,853.20**
COST: **$3,980,000.00** INCREASE ☑ DECREASE ☐	HEADQUARTERS APPROVAL REQUIRED? ☑ YES ☐ NO
SUPPLEMENTAL FUNDS PROVIDED: **$0.00**	IS THIS REQUEST IN ACCORDANCE WITH ENVIRONMENTAL DOCUMENTS? ☑ YES ☐ NO
CCO DESCRIPTION: WTI Temp. Col. / Skid Footing	**PROJECT DESCRIPTION:** CONSTRUCT ROUTE 80 TEMP BYPASS STRUCTURE

Original Contract Time:	Time Adj. This Change:	Previously Approved CCO Time Adjustments:	Percentage Time Adjusted: (including this change)	Total # of Unreconciled Deferred Time CCO(s): (including this change)
475 Day(s)	0 Day(s)	381 Day(s)	80 %	7

THIS CHANGE ORDER PROVIDES FOR:

The construction of temporary skip support columns and skid track foundations for the scheduled Labor Day Weekend bridge replacement.

This contract was awarded on March 10, 2004 to construct a temporary detour for both eastbound and westbound I-80 traffic that allows for the tie-in of the east span of the new San Francisco-Oakland Bay Bridge (SFOBB) to Yerba Buena Island. The detour consists of three main structures including, the east tie-in to the bridge, the west tie-in to the island and the viaduct between the two tie-in structures. This change order involves work for the west tie-in (WTI) structure.

The Department issued a December 14, 2006 memo entitled Strategy for South-South Detour Contract Completion which was approved by both Tony Anziano (Toll Bridge Program Manager) and Richard Land (Chief Engineer). This strategey memo provided for the Department to assume responsibility for the designs of the East Tie-In (ETI) and West Tie-In (WTI) portions of this contract, and incorporated seismic retrofit of the permanent Yerba Buena Island Transition Structure (YBITS).

Work on the WTI is being directed via several change orders to facilitate contract administration as plans and estimates become available. This change order provides for the construction of the temporary columns and skid track foundations that will be used to roll the new structure into its permanent location to take place on Labor Day weekend 2007. This change is in accordance with the strategey memo.

Compensation for this work shall be paid as extra work at an agreed lump sum price of $3,980,000.00. The cost shall be financed from the contract's contingency funds.

Supporting documents and information for this change including a cost analysis are on file with the project records.

CONCURRED BY:			
Construction Engineer:	Mahantesh Anigol	Date	7/31/07
Bridge Engineer:	Bill Casey, Struct. Rep	Date	7/20/07
Project Engineer:	Hong Wong	Date	7/23/07
Project Manager:	Alec Melkonians	Date	7/23/07
FHWA Rep.:		Date	
Environmental:		Date	
Other (specify):	Robert Kobal, HQ Asst.Const.Coor	Date	7/26/07
Other (specify):	Bill Zanetich, Maintenance	Date	7/20/07
District Prior Approval By:	Dennis Turchon, ACM	Date	7/20/07
HQ (Issue Approve) By:	Ken Darby, HQ CCO Engineer	Date	7/27/07
Resident Engineer's Signature:	M. A. Anigol	Date	7/31/07

ESTIMATE OF COST

	THIS REQUEST	TOTAL TO DATE
ITEMS	$0.00	$0.00
FORCE ACCOUNT	$0.00	$0.00
AGREED PRICE	$3,980,000.00	$3,980,000.00
ADJUSTMENT	$0.00	$0.00
TOTAL	$3,980,000.00	$3,980,000.00

FEDERAL PARTICIPATION

☐ PARTICIPATING ☐ PARTICIPATING IN PART ☐ NONE
☐ NON-PARTICIPATING (MAINTENANCE) ☑ NON-PARTICIPATING

FEDERAL SEGREGATION (if more than one Funding Source or P.I.P. type)
☑ CCO FUNDED PER CONTRACT ☐ CCO FUNDED AS FOLLOWS

FEDERAL FUNDING SOURCE	PERCENT

ADA Notice: For individuals with sensory disabilities, this document is available in alternate formats. For information call: (916) 654-6410 or TDD (916) 654-3880 or write Records and Forms Management, 1120 N Street, MS-89, Sacramento, CA 95814.

CONTRACT CHANGE ORDER

Change Requested by: Contractor

CCO 85	Suppl. No. 0	Contract No. 04 - 0120R4	Road SF-80-12.6/13.2	FED. AID LOC.: ACBRIM-080-1(097)N

To: CC MYERS INC

You are directed to make the following changes from the plans and specifications or do the following described work not included in the plans and specifications for this contract. ***NOTE: This change order is not effective until approved by the Engineer.***

Description of work to be done, estimate of quantities and prices to be paid. (Segregate between additional work at contract price, agreed price and force account.) Unless otherwise stated, rates for rental of equipment cover only such time as equipment is actually used and no allowance will be made for idle time. This last percentage shown is the net accumulated increase or decrease from the original quantity in the Engineer's Estimate.

Extra Work at Lump Sum:

Provide compensation to the Contractor for all design costs incurred with the redesign of the layout of the proposed 300mm water line (US Navy) relocation shown on Sheet No. 41 of the contract bid plan sheets, left of "ED1" sta 51+50.

For this work, the Contractor will be compensated a lump sum of $12,480.00. This sum constitutes full and final compensation, including all markups, associated with the work of this change.

Total Cost of Extra Work at Lump Sum $12,480.00

Estimated Cost: Increase ☑ Decrease ☐ **$12,480.00**

By **reason of this order the time of completion will be adjusted as follows:** 0 days

Submitted by

Signature	Resident Engineer BILL CASEY	Date 2-11-08

Approval Recommended by

Signature	Construction Engineer DENNIS TURCHON	Date 2/11/08

Engineer Approval by

Signature	Area Construction Manager DENNIS TURCHON	Date 3/17/08

We the undersigned contractor, have given careful consideration to the change proposed and agree, if this proposal is approved, that we will provide all equipment, furnish the materials, except as may otherwise be noted above, and perform all services necessary for the work above specified, and will accept as full payment therefor the prices shown above.

NOTE: If you, the contractor, do not sign acceptance of this order, your attention is directed to the requirements of the specifications as to proceeding with the ordered work and filing a written protest within the time therein specified.

Contractor Acceptance by

Signature	(Print name and title)	Date
Dewey C. Lee, Jr.	DEWEY C. LEE JR. Contract Manager	3/9/08

STATE OF CALIFORNIA - DEPARTMENT OF TRANSPORTATION

CONTRACT CHANGE ORDER MEMORANDUM

DATE: 1/15/2008 Page 1 of 1

TO: MIKE FORNER / DENNIS TURCHON

FROM: BILL CASEY

FILE: E.A. 04 - 0120R4
CO-RTE-PM SF-80-12.6/13.2
FED. NO. ACBRIM-080-1(097)N

CCO#: **85** | SUPPLEMENT#: **0** | Category Code: **CCPV** (CLPV)

CONTINGENCY BALANCE (incl. this change) **$13,560,072.22**

COST: **$12,480.00** INCREASE ☑ DECREASE ☐

HEADQUARTERS APPROVAL REQUIRED? ☐ YES ☑ NO

SUPPLEMENTAL FUNDS PROVIDED: **$0.00**

IS THIS REQUEST IN ACCORDANCE WITH ENVIRONMENTAL DOCUMENTS? ☑ YES ☐ NO

CCO DESCRIPTION:
300mm Water Line Design

PROJECT DESCRIPTION:
CONSTRUCT ROUTE 80 TEMP BYPASS STRUCTURE

Original Contract Time:	Time Adj. This Change:	Previously Approved CCO Time Adjustments:	Percentage Time Adjusted: (including this change)	Total # of Unreconciled Deferred Time CCO(s): (including this change)
475 Day(s)	**0** Day(s)	**1195** Day(s)	**252** %	**7**

THIS CHANGE ORDER PROVIDES FOR:
compensation to the contractor for providing design services concerning the revised layout of a 330mm water line for the US Coast Guard.

This contract provides for the relocation of a 300mm water line that services the US Coast Guard station adjacent to the project. Initially it was determined that the proposed layout of the line in the contract plans conflicted with the construction of foundations that would be constructed under a future contract, 04-0120S4. This conflict caused the Department to order the contractor to redesign the water lines layout in order to eliminate the conflict.

While the contractor performed this design work, it was determined that the relocation of the water line was not required and the work was stopped. This change order compensates the contractor for design costs already incurred prior to the re-design and subsequent abandonment of the relocation.

Compensation shall be paid as extra work at an agreed lump sum of 12,480.00 which shall be financed from the contract's contingency funds. A cost estimate is on file.

No adjustment of contract time is warranted as the work will not affect the controlling operation.

Maintenance concurrence is not required as the proposed redesign of the water line will not be implemented and therefor doesn't affect any permanent roadway feature.

Approval of this change order is recommended by the Resident Engineer.

CONCURRED BY:

Construction Engineer:	Mahantesh Anigol, Dist. Rep	Date 01/04/08
Bridge Engineer:		Date
Project Engineer:	Trinh Lai	Date 1/15/08
Project Manager:	Alec Melkonians	Date 1/18/08
FHWA Rep.:		Date
Environmental:		Date
Other (specify):		Date
Other (specify):		Date
District Prior Approval By:		Date
HQ (Issue Approve) By:		Date
Resident Engineer's Signature:		Date 2-11-08

ESTIMATE OF COST

	THIS REQUEST	TOTAL TO DATE
ITEMS	$0.00	$0.00
FORCE ACCOUNT	$0.00	$0.00
AGREED PRICE	$12,480.00	$12,480.00
ADJUSTMENT	$0.00	$0.00
TOTAL	$12,480.00	$12,480.00

FEDERAL PARTICIPATION

☐ PARTICIPATING ☐ PARTICIPATING IN PART ☐ NONE
☐ NON-PARTICIPATING (MAINTENANCE) ☑ NON-PARTICIPATING

FEDERAL SEGREGATION (if more than one Funding Source or P.I.P. type)
☑ CCO FUNDED PER CONTRACT ☐ CCO FUNDED AS FOLLOWS

FEDERAL FUNDING SOURCE	PERCENT

ADA Notice: For individuals with sensory disabilities, this document is available in alternate formats. For information call: (916) 654-6410 or TDD (916) 654-3880 or write Records and Forms Management, 1120 N Street, MS-89, Sacramento, CA 95814.

CONTRACT CHANGE ORDER

Change Requested by: Engineer

CCO 86	Suppl. No. 0	Contract No. 04 - 0120R4	Road SF-80-12.6/13.2	FED. AID LOC.: ACBRIM-080-1(097)N

To: CC MYERS INC

You are directed to make the following changes from the plans and specifications or do the following described work not included in the plans and specifications for this contract. ***NOTE: This change order is not effective until approved by the Engineer.***

Description of work to be done, estimate of quantities and prices to be paid. (Segregate between additional work at contract price, agreed price and force account.) Unless otherwise stated, rates for rental of equipment cover only such time as equipment is actually used and no allowance will be made for idle time. This last percentage shown is the net accumulated increase or decrease from the original quantity in the Engineer's Estimate.

Adjustment of Compensation at Lump Sum:

Compensate the Contractor for all direct costs incurred due to the temporary suspension of work in West Tie-In location from April 1, 2005 through April 16, 2006 in accordance with Section 8-1.05 "Temporary Suspension of Work" of the Standard Specifications. These costs include:

1. Demobilization of the 82 ton crane performed by CC Myers Inc.
2. Demobilization of Frank Medina General Engineering Contractor, to include the loading out and restocking of the ADIEM 350 system.
3. Casing storage fee incurred by Condon Johnson & Associates, Inc.
4. Construction signs replaced by Schotka Construction.
5. Demobilization of Harris Salinas Rebar, Inc., to include the loss of use and loading in/out of a forklift.

For this work, Contractor agrees to accept a lump sum of $42,764.31. This sum constitutes full and complete compensation, including all markups for the work of this change. In addition, this change shall satisfy the requirements of the 6th paragraph of Section 8-1.05, "Temporary Suspension of Work" of the Standard Specifications as stipulated in Contract Change Order No. 24 Supplement No. 2 and no other compensation will be made therefor.

Total cost of Adjustment of Compensation at Lump Sum $42,764.31

Estimated Cost: Increase ☑ Decrease ☐ **$42,764.31**

By reason of this order the time of completion will be adjusted as follows: 0 days

Submitted by

Signature	Resident Engineer	Date
	BILL CASEY	2-6-08

Approval Recommended by

Signature	Area Construction Manager	Date
	DENNIS TURCHON	2/6/08

Engineer Approval by

Signature	Area Construction Manager	Date
	DENNIS TURCHON	5/19/08

We the undersigned contractor, have given careful consideration to the change proposed and agree, if this proposal is approved, that we will provide all equipment, furnish the materials, except as may otherwise be noted above, and perform all services necessary for the work above specified, and will accept as full payment therefor the prices shown above.

NOTE: If you, the contractor, do not sign acceptance of this order, your attention is directed to the requirements of the specifications as to proceeding with the ordered work and filing a written protest within the time therein specified.

Contractor Acceptance by

Signature	(Print name and title)	Date
	DEWEY C. LEE JR. Contract Manager	5/13/08

STATE OF CALIFORNIA - DEPARTMENT OF TRANSPORTATION

CONTRACT CHANGE ORDER MEMORANDUM

DATE: 1/30/2008 RECEIVED Page 1 of 1

TO: MIKE FORNER / DENNIS TURCHON	FILE: E.A. 04 - 0120R4 007657 JUN 20 08
FROM: BILL CASEY	CO-RTE-PM SF-80-12.6/13.2
	FED. NO. ACBRIM-080-1(097)N
CCO#: 86 SUPPLEMENT#: 0 Category Code: AXZZ	CONTINGENCY BALANCE (incl. this change) $89,927,792.86
COST: $42,764.31 INCREASE ☑ DECREASE ☐	HEADQUARTERS APPROVAL REQUIRED? ☐ YES ☑ NO
SUPPLEMENTAL FUNDS PROVIDED: $0.00	IS THIS REQUEST IN ACCORDANCE WITH ENVIRONMENTAL DOCUMENTS? ☑ YES ☐ NO
CCO DESCRIPTION: Direct Suspension Costs due to CCO24S2	**PROJECT DESCRIPTION:** CONSTRUCT ROUTE 80 TEMP BYPASS STRUCTURE

Original Contract Time:	Time Adj. This Change:	Previously Approved CCO Time Adjustments:	Percentage Time Adjusted: (including this change)	Total # of Unreconciled Deferred Time CCO(s): (including this change)
475 Day(s)	0 Day(s)	525 Day(s)	111 %	7

THIS CHANGE ORDER PROVIDES FOR:

Compensating the Contractor for all direct costs incurred due to the temporary suspension of work in West Tie-In location from April 1, 2005 through April 16, 2006 per State's Letter No. 05.03.01-000349 dated March 24, 2005.

This change order is necessary to satisfy the deferred costs concerning Contract Change Order No. 24 Supplement No. 2 in accordance with paragraph 6th of Section 8-1.05, "Temporary Suspension of Work" of the Standard Specifications.

The scope of costs on this change includes:

1. Demobilization of the 82 ton crane performed by CC Myers Inc.
2. Demobilization of Frank Medina General Engineering Contractor, to include the loading out and restocking of the ADIEM 350 system.
3. Casing storage fee incurred by Condon Johnson & Associates, Inc.
4. Construction signs replaced by Schotka Construction.
5. Demobilization of Harris Salinas Rebar, Inc., to include the loss of use and loading in/out of a forklift.

The Contractor shall be compensated at an Adjustment of Compensation at Agreed Lump Sum price of $ 42,764.31, which will be financed by the contract's contingency funds. A cost analysis is on file and in the project records.

There will be no time adjustment by reason of this change since it does not affect the controlling operation.

Design concurrence is not required as this change does not affect the design of the project. Maintenance concurrence is not required since it does not affect any permanent roadway features.

CONCURRED BY:			
Construction Engineer:		Date	
Bridge Engineer:		Date	
Project Engineer:		Date	
Project Manager:	Alec Melkonians	Date	1/31/08
FHWA Rep.:		Date	
Environmental:		Date	
Other (specify):	Robert Kobal, HQ Asst.Const.Coor	Date	2/1/08
Other (specify):		Date	
District Prior Approval By:		Date	
HQ (Issue .Approve) By:		Date	
Resident Engineer's Signature:		Date	
2-6-08			

ESTIMATE OF COST

	THIS REQUEST	TOTAL TO DATE
ITEMS	$0.00	$0.00
FORCE ACCOUNT	$0.00	$0.00
AGREED PRICE	$0.00	$0.00
ADJUSTMENT	$42,764.31	$42,764.31
TOTAL	$42,764.31	$42,764.31

FEDERAL PARTICIPATION

☐ PARTICIPATING ☐ PARTICIPATING IN PART ☐ NONE
☐ NON-PARTICIPATING (MAINTENANCE) ☑ NON-PARTICIPATING

FEDERAL SEGREGATION (if more than one Funding Source or P.I.P. type)
☑ CCO FUNDED PER CONTRACT ☐ CCO FUNDED AS FOLLOWS

FEDERAL FUNDING SOURCE	PERCENT

ADA Notice: For individuals with sensory disabilities, this document is available in alternate formats. For information call: (916) 654-6410 or TDD (916) 654-3880 or write Records and Forms Management, 1120 N Street, MS-89, Sacramento, CA 95814.

CONTRACT CHANGE ORDER

Change Requested by: Engineer

CCO 87	Suppl. No. 0	Contract No. 04 - 0120R4	Road SF-80-12.6/13.2	FED. AID LOC.: ACBRIM-080-1(097)N

To: **CC MYERS INC**

You are directed to make the following changes from the plans and specifications or do the following described work not included in the plans and specifications for this contract. ***NOTE: This change order is not effective until approved by the Engineer.***

Description of work to be done, estimate of quantities and prices to be paid. (Segregate between additional work at contract price, agreed price and force account.) Unless otherwise stated, rates for rental of equipment cover only such time as equipment is actually used and no allowance will be made for idle time. This last percentage shown is the net accumulated increase or decrease from the original quantity in the Engineer's Estimate.

Adjustment of Compensation at Force Account:

Compensate the Contractor for the actual shipping costs incurred concerning the transportation of the steel truss of the Temporary Bypass Structure (Bridge No. 34-0006 (TEMP)) viaduct superstructure from the port of Pohang in South Korea to the project site. Compensation shall be paid based upon the actual shipping invoices issued by the newly contracted carrier, Oldendorff Carriers, to Dongkuk. These shipping costs shall be invoiced to the Contractor by Dongkuk under the same terms as material purchases, as stated in Exhibit A, Item 3 of the June 2, 2006 purchase agreement with Dongkuk.

Compensation paid at force account shall include all additional viaduct shipping costs, from the port of Pohang in South Korea to the project site, incurred due to the Department-directed design enhancements to the steel viaduct that were incorporated into Imbsen & Associates Inc. approved "Final Superstructure Resubmittal" viaduct plans (Sheets 1 through 112) dated October 9, 2006.

Estimated Cost of Adjustment of Compensation at Force Account $900,000.00

Adjustment of Compensation at Lump Sum:

The Contractor shall provide a credit to the Department for their as-planned shipping costs concerning the transportation of the steel truss of the Temporary Bypass Structure (Bridge No. 34-0006 (TEMP)) viaduct superstructure from the port of Pohang in South Korea to the project site. For these costs, the Contractor shall provide an agreed lump sum credit of $425,930.00 to the Department.

Provide compensation to the Contractor for all costs associated with the cancellation of the original shipping agreement between Dongkuk and Simdo Shipping Co., (Contract No. B0606-01) pertaining to the transport of the steel viaduct from Dongkuk's fabrication facility to the project site. For these costs, the Contractor shall be compensated an agreed lump sum of $60,500.00 which constitutes full and final compensation, including all markups, for all costs associated with the cancellation of the shipping agreement with Simdo Shipping Co.

Total Cost of Adjustment of Compensation at Agreed Lump Sum .....($365,430.00)

CONTRACT CHANGE ORDER

Change Requested by: Engineer

CCO 87	Suppl. No. 0	Contract No. 04 - 0120R4	Road SF-80-12.6/13.2	FED. AID LOC.: ACBRIM-080-1(097)N

Estimated Cost: Increase ☑ Decrease ☐ **$534,570.00**

By reason of this order the time of completion will be adjusted as follows: 0 days

Submitted by

Signature	Resident Engineer	Date
M.U. Anigol	MAHANTESH ANIGOL	7/19/07

Approval Recommended by

Signature	Area Construction Manager	Date
	DENNIS TURCHON	7/20/07

Engineer Approval by

Signature	Area Construction Manager	Date
	DENNIS TURCHON	8/20/07

We the undersigned contractor, have given careful consideration to the change proposed and agree, if this proposal is approved, that we will provide all equipment, furnish the materials, except as may otherwise be noted above, and perform all services necessary for the work above specified, and will accept as full payment therefor the prices shown above.

NOTE: If you, the contractor, do not sign acceptance of this order, your attention is directed to the requirements of the specifications as to proceeding with the ordered work and filing a written protest within the time therein specified.

Contractor Acceptance by

Signature	(Print name and title)	Date
	DANIEL E. HOMICK, PRESIDENT	8/18/07

STATE OF CALIFORNIA - DEPARTMENT OF TRANSPORTATION

CONTRACT CHANGE ORDER MEMORANDUM

TO: MIKE FORNER / DENNIS TURCHON	FILE: E.A. 04 - 0120R4
	CO-RTE-PM SF-80-12.6/13.2
FROM: MAHANTESH ANIGOL	FED. NO. ACBRIM-080-1(097)N
CCO# 87 SUPPLEMENT#: 0 Category Code: CHXX	CONTINGENCY BALANCE (incl. this change) $31,843,983.20
COST: $534,570.00 INCREASE ☑ DECREASE ☐	HEADQUARTERS APPROVAL REQUIRED? ☑ YES ☐ NO
SUPPLEMENTAL FUNDS PROVIDED: $0.00	IS THIS REQUEST IN ACCORDANCE WITH ENVIRONMENTAL DOCUMENTS? ☑ YES ☐ NO
CCO DESCRIPTION: VIA Shipping Escalation Costs	**PROJECT DESCRIPTION:** CONSTRUCT ROUTE 80 TEMP BYPASS STRUCTURE

Original Contract Time:	Time Adj. This Change:	Previously Approved CCO Time Adjustments:	Percentage Time Adjusted: (including this change)	Total # of Unreconciled Deferred Time CCO(s): (including this change)
475 Day(s)	0 Day(s)	381 Day(s)	80 %	7

THIS CHANGE ORDER PROVIDES FOR:

compensation to the contractor for additional shipping costs incurred due to Department caused delays to the completion of the fabrication and Department design enhancements incorporated into the viaduct steel truss in South Korea.

This contract was awarded on March 10, 2004 to construct a temporary detour for both eastbound and westbound I-80 traffic that allows for the tie in of the east span of the new San Francisco Oakland Bay Bridge (SFOBB) to Yerba Buena Island. The detour consist of three main structures, the east tie in to the bridge, the west tie in to the island and the viaduct structure between the two tie ins. The contract was awarded as a performance based project with the contractor responsible for meeting the design criteria specified in the contract.

This change order concerns Department delays incurred to the steel fabrication caused by the implementation of Department design enhancements to the viaduct structure. The viaduct consists of 4 spans of a double deck steel truss approximately 20 meters wide and 320 meters long with a weight of over 4,300 metric tons.

During the design approval process, the main SFOBB Self Anchored Suspension Bridge (SAS) project, for which this project was a precursor, was incurring significant delay. This delay to the SAS resulted in the detour structure being in use for a significantly longer period than originally anticipated.

In order to satisfy the Department that the safety of the traveling public would be fully addressed, the Office of Structures Design requested several design enhancements to the steel truss concerning the connection of the floor beam and stringers and the addition of stopper blocks and brackets at the bent caps. These enhancements were implemented by the contractor's designer under Change Orders No. 49 and 50 and were incorporated into the contractor's approved viaduct plan sheets dated October 9, 2006. While these enhancements shall provide for a more thorough design, they have acted to delay the completion of the steel truss fabrication of the viaduct in South Korea. This change order provides compensation for additional shipping costs resulting from this delay.

The steel truss fabricator, Dongkuk Structures & Construction Co., Ltd (Dongkuk), had entered into a shipping agreement based upon their as-planned schedule. This schedule called for fabrication to begin in mid-September with the shipment of the first 2 spans of the truss being shipped in early March 2007. The second and final 2 spans were to be shipped by the end of April 2007. Dongkuk entered into a contract with a shipper in June 2006 based on this schedule.

The Department has delayed the as-planned fabrication schedule in 2 ways. First, the delivery of the revised set of plans was not received by the fabricator until mid-October 2006 which delayed the start of fabrication until mid-November 2006. Second, the enhancements themselves extended the fabrication period. Together, these delays caused Dongkuk to miss their planned shipping windows and they were forced to find another shipper that could provide shipment dates based on a revised completion schedule. This change order provides compensation for the additional shipping costs resulting from this change.

The change order also includes compensation for additional shipping costs pertaining to the added weight of the viaduct structure due to Department design enhancements. Compensation for the fabrication costs concerning these enhancements are being compensated under Change Order No. 79. In order to avoid the difficulty of having to separate the planned weight from the weight of the design enhancements, these shipping costs are included within this change order.

FHWA approval is no longer required as their participation in funding this project has discontinued.

ADA Notice: For individuals with sensory disabilities, this document is available in alternate formats. For information call: (916) 654-6410 or TDD (916) 654-3880 or wr
Records and Forms Management, 1120 N Street, MS-89, Sacramento, CA 95814.

Based on a review of the original shipping contract, the contractor shall provide a credit of $365,430 to the Department for their as-planned shipping costs. An adjustment of compensation at an agreed lump sum of $60,500 shall be compensated for the cost of canceling the original agreement as stated in that contract. Compensation for the actual shipping costs incurred shall be paid as an adjustment of compensation at force account at an estimated cost of $900,000.00. The total change order cost of $534,570 shall be financed from the contract's contingency funds. A cost estimate is on file.

Costs concerning the actual implementation of the Department design enhancements to the viaduct and the delays incurred are being addressed separately under Change Orders No. 79 and 89. Additional jobsite costs concerning steel handling and erection due to the implementation of the design enhancements shall be addressed under Change Orders No. 80 and 89.

Maintenance concurrence is not required as the viaduct is a temporary structure and doesn't affect any permanent roadway features.

CONCURRED BY:		
Construction Engineer:	Mahantesh Anigol MA	Date 8/21/07
Bridge Engineer:	Bill Casey, Struct. Rep	Date 7/19/07
Project Engineer:	Hong Wong	Date 8/20/07
Project Manager:	Alec Melkonians	Date 8/20/07
FHWA Rep.:		Date
Environmental:		Date
Other (specify):	Robert Kobal, HQ Asst.Const.Coor	Date 7/18/07
Other (specify):		Date
District Prior Approval By:		Date
HQ (Issue Approve) By:	Ken Darby, HQ CCO Engineer	Date 7/24/07
Resident Engineer's Signature:	M.A. Anigol	Date 8/21/07

ESTIMATE OF COST

	THIS REQUEST	TOTAL TO DATE
ITEMS	$0.00	$0.00
FORCE ACCOUNT	$0.00	$0.00
AGREED PRICE	$0.00	$0.00
ADJUSTMENT	$534,570.00	$534,570.00
TOTAL	$534,570.00	$534,570.00

FEDERAL PARTICIPATION

☐ PARTICIPATING ☐ PARTICIPATING IN PART ☑ NONE
☐ NON-PARTICIPATING (MAINTENANCE) ☐ NON-PARTICIPATING

FEDERAL SEGREGATION (if more than one Funding Source or P.I.P. type)
☑ CCO FUNDED PER CONTRACT ☐ CCO FUNDED AS FOLLOWS

FEDERAL FUNDING SOURCE	PERCENT

ADA Notice: For individuals with sensory disabilities, this document is available in alternate formats. For information call: (916) 654-6410 or TDD (916) 654-3880 or write Records and Forms Management, 1120 N Street, MS-89, Sacramento, CA 95814.

STATE OF CALIFORNIA - DEPARTMENT OF TRANSPORTATION

CONTRACT CHANGE ORDER

Change Requested by: Engineer

CCO 87	Suppl. No. 1	Contract No. 04 - 0120R4	Road SF-80-12.6/13.2	FED. AID LOC.: ACBRIM-080-1(097)N

To: CC MYERS INC

You are directed to make the following changes from the plans and specifications or do the following described work not included in the plans and specifications for this contract. ***NOTE: This change order is not effective until approved by the Engineer.***

Description of work to be done, estimate of quantities and prices to be paid. (Segregate between additional work at contract price, agreed price and force account.) Unless otherwise stated, rates for rental of equipment cover only such time as equipment is actually used and no allowance will be made for idle time. This last percentage shown is the net accumulated increase or decrease from the original quantity in the Engineer's Estimate.

Adjustment of Compensation at Force Account:

Provide additional funds to compensate the Contractor for the actual shipping costs incurred concerning the transportation of the steel truss of the Temporary Bypass Structure (Bridge No. 34-0006 (TEMP)) viaduct superstructure from the port of Pohang in South Korea to the project site. Compensation shall be paid based upon the actual shipping invoices issued by the newly contracted carrier, Oldendorff Carriers, to Dongkuk. These shipping costs shall be invoiced to the Contractor by Dongkuk under the same terms as material purchases, as stated in Exhibit A, Item 3 of the June 2, 2006 purchase agreement with Dongkuk.

Compensation paid at force account shall include all additional viaduct shipping costs, from the port of Pohang in South Korea to the project site, incurred due to the Department-directed design enhancements to the steel viaduct that were incorporated into Imbsen & Associates Inc. approved "Final Superstructure Resubmittal" viaduct plans (Sheets 1 through 112) dated October 9, 2006.

Estimated Cost of Adjustment of Compensation at Force Account $200,000.00

Estimated Cost: **Increase** ☑ **Decrease** ☐ **$200,000.00**

By reason of this order the time of completion will be adjusted as follows: 0 days

Submitted by

Signature	Resident Engineer BILL CASEY	Date 12-26-07

Approval Recommended by

Signature	Area Construction Manager DENNIS TURCHON	Date 1/4/08

Engineer Approval by

Signature	Area Construction Manager DENNIS TURCHON	Date 1/14/08

We the undersigned contractor, have given careful consideration to the change proposed and agree, if this proposal is approved, that we will provide all equipment, furnish the materials, except as may otherwise be noted above, and perform all services necessary for the work above specified, and will accept as full payment therefor the prices shown above.

NOTE: If you, the contractor, do not sign acceptance of this order, your attention is directed to the requirements of the specifications as to proceeding with the ordered work and filing a written protest within the time therein specified.

Contractor Acceptance by

Signature NOT APPLICABLE	(Print name and title)	Date

CONCURRED BY:			
Construction Engineer:		Date	
Bridge Engineer:		Date	
Project Engineer:	Hong Wong, PE	Date	1/9/08
Project Manager:	Alec Melkonians	Date	1/9/08
FHWA Rep.:		Date	
Environmental:		Date	
Other (specify):		Date	
Other (specify):		Date	
District Prior Approval By:		Date	
HQ (Issue Approve) By:	Ken Darby, HQ CCO Engineer	Date	
Resident Engineer's Signature:		Date	
		1-10-08	

ESTIMATE OF COST

	THIS REQUEST	TOTAL TO DATE
ITEMS	$0.00	$0.00
FORCE ACCOUNT	$0.00	$0.00
AGREED PRICE	$0.00	$0.00
ADJUSTMENT	$200,000.00	$734,570.00
TOTAL	$200,000.00	$734,570.00

FEDERAL PARTICIPATION

☐ PARTICIPATING ☐ PARTICIPATING IN PART ☐ NONE
☐ NON-PARTICIPATING (MAINTENANCE) ☑ NON-PARTICIPATING

FEDERAL SEGREGATION (if more than one Funding Source or P.I.P. type)
☑ CCO FUNDED PER CONTRACT ☐ CCO FUNDED AS FOLLOWS

FEDERAL FUNDING SOURCE	PERCENT

ADA Notice: For individuals with sensory disabilities, this document is available in alternate formats. For information call: (916) 654-6410 or TDD (916) 654-3880 or write Records and Forms Management, 1120 N Street, MS-89, Sacramento, CA 95814.

STATE OF CALIFORNIA - DEPARTMENT OF TRANSPORTATION

CONTRACT CHANGE ORDER MEMORANDUM

TO: MIKE FORNER / DENNIS TURCHON	FILE: E.A. 04 - 0120R4
FROM: BILL CASEY	CO-RTE-PM SF-80-12.6/13.2
	FED. NO. ACBRIM-080-1(097)N
CCO#: 87 SUPPLEMENT#: 1 Category Code: CHXX	CONTINGENCY BALANCE (incl. this change) $123,466,499.41
COST: $200,000.00 INCREASE ☑ DECREASE ☐	HEADQUARTERS APPROVAL REQUIRED? ☑ YES ☐ NO
SUPPLEMENTAL FUNDS PROVIDED: $0.00	IS THIS REQUEST IN ACCORDANCE WITH ENVIRONMENTAL DOCUMENTS? ☑ YES ☐ NO
CCO DESCRIPTION: VIA Shipping Escalation Cost	PROJECT DESCRIPTION: CONSTRUCT ROUTE 80 TEMP BYPASS STRUCTURE

Original Contract Time:	Time Adj. This Change:	Previously Approved CCO Time Adjustments:	Percentage Time Adjusted: (including this change)	Total # of Unreconciled Deferred Time CCO(s): (including this change)
475 Day(s)	0 Day(s)	1195 Day(s)	252 %	7

THIS CHANGE ORDER PROVIDES FOR:

Additional force account funding for the viaduct steel shipping costs from the original change order.

The original change order provided $900,000.00 in force account to pay for actual shipping costs of the two shipments of steel from South Korea to the project site. Due to off loading delays associated with the first shipment, the rate for the second shipment will be higher than anticipated and will require an additional funding.

The off loading delays were incurred due to the Department's added work associated with the advance construction of the Yerba Buena Island Transition Structure (YBITS) that was added to the contract as part of the Department's December 25, 2006 memorandum recommendation. Due to this added work, the contractor's as-planned jobsite storage area for the viaduct steel was no longer available. This caused the first viaduct steel shipment to be unloaded and stored at the Port of San Francisco which caused considerable delays due to the availability of those facilities.

Additional costs shall also be incurred to compensate the contractor for loading and securing the steel onto the vessels for shipment. These costs were credited to the Department concerning the contractor's as-planned costs under the original change order but no force account funding was provided to pay for the actual costs to be incurred.

Compensation for the additional shipping costs shall be paid as an adjustment of compensation at force account at an estimated additional cost of $200,000.00 which shall be financed from the contract's contingency funds. A cost estimate is on file.

The Contractor's signature is not required for additional funds for Force Account change orders. Therefore this change order is being issued unilaterally.

This change was concurred by Alec Melkonians - Asst. Project Manager and Hong Wong - Project Engineer.

Maintenance concurrence is not required as the additional shipping costs do not affect any permanent roadway features.

ADA Notice: For individuals with sensory disabilities, this document is available in alternate formats. For information call: (916) 654-6410 or TDD (916) 654-3880 or write Records and Forms Management, 1120 N Street, MS-89, Sacramento, CA 95814.

007006 E1-4 08 E4136

STATE OF CALIFORNIA - DEPARTMENT OF TRANSPORTATION

CONTRACT CHANGE ORDER

Change Requested by: Engineer

CCO 88	Suppl. No. 0	Contract No. 04 - 0120R4	Road SF-80-12.6/13.2	FED. AID LOC.: ACBRIM-080-1(097)N

To: **CC MYERS INC**

You are directed to make the following changes from the plans and specifications or do the following described work not included in the plans and specifications for this contract. ***NOTE: This change order is not effective until approved by the Engineer.***

Description of work to be done, estimate of quantities and prices to be paid. (Segregate between additional work at contract price, agreed price and force account.) Unless otherwise stated, rates for rental of equipment cover only such time as equipment is actually used and no allowance will be made for idle time. This last percentage shown is the net accumulated increase or decrease from the original quantity in the Engineer's Estimate.

Adjustment of Compensation at Lump Sum:

Provide compensation to the Contractor for idle labor and equipment costs incurred by Dongkuk Structures & Construction Co., Ltd (Dongkuk), located in South Korea, due to Department caused delays to the start of the fabrication of the steel viaduct of the Temporary Bypass Structure (Bridge No. 34-0006 (TEMP)).

For these costs, the Contractor will be compensated a lump sum of $954,460.00.

The intent of this change order is to provide compensation for verified delay costs, incurred prior to the actual start of the viaduct fabrication on November 21, 2006, due to the Department-directed design enhancements that were incorporated into Imbsen & Associates Inc. approved viaduct plans dated October 9, 2006.

The compensation provided represents costs verified to date for Department accepted delays to the viaduct fabrication anc this change does not preclude the Contractor from claiming additional costs related to the fabrication delay nor does it establish the Department as being responsible for the entire claimed delay period from September 15 through November 20, 2006.

Upon the verification of any additional costs or the establishment of additional Department delay during the September 15 through November 20, 2006 delay period, a supplemental change order shall be issued to provide compensation for these costs.

Total Cost of Adjustment of Compensation at Lump Sum $954,460.00

Estimated Cost: **Increase** ☑ **Decrease** ☐ **$954,460.00**

By reason of this order the time of completion will be adjusted as follows: 0 days

Submitted by

Signature	Resident Engineer	Date
M. U. Anigol	MAHANTESH ANIGOL	7/18/07

Approval Recommended by

Signature	Area Construction Manager	Date
Michael Fearn	DENNIS TURCHON	7/18/07

Engineer Approval by

Signature	Area Construction Manager	Date
Michael Fearn	DENNIS TURCHON	7/20/07

We the undersigned contractor, have given careful consideration to the change proposed and agree, if this proposal is approved, that we will provide all equipment, furnish the materials, except as may otherwise be noted above, and perform all services necessary for the work above specified, and will accept as full payment therefor the prices shown above.

NOTE: If you, the contractor, do not sign acceptance of this order, your attention is directed to the requirements of the specifications as to proceeding with the ordered work and filing a written protest within the time therein specified.

Contractor Acceptance by

Signature	(Print name and title)	Date
[signature]	DANIEL E. Hamik, PRESIDENT	7/19/07

STATE OF CALIFORNIA - DEPARTMENT OF TRANSPORTATION

CONTRACT CHANGE ORDER MEMORANDUM

TO: MIKE FORNER / DENNIS TURCHON	FILE: **E.A.** 04 - 0120R4
	CO-RTE-PM SF-80-12.6/13.2
FROM: MAHANTESH ANIGOL	**FED. NO.** ACBRIM-080-1(097)N
CCO#: **88** SUPPLEMENT#: **0** Category Code: **CHXX**	CONTINGENCY BALANCE (incl. this change) **$24,346,080.65**
COST: **$954,460.00** INCREASE ☑ DECREASE ☐	HEADQUARTERS APPROVAL REQUIRED? ☑ YES ☐ NO
SUPPLEMENTAL FUNDS PROVIDED: **$0.00**	IS THIS REQUEST IN ACCORDANCE WITH ENVIRONMENTAL DOCUMENTS? ☑ YES ☐ NO
CCO DESCRIPTION: VIA Fabrication Delays	**PROJECT DESCRIPTION:** CONSTRUCT ROUTE 80 TEMP BYPASS STRUCTURE

Original Contract Time:	Time Adj. This Change:	Previously Approved CCO Time Adjustments:	Percentage Time Adjusted: (including this change)	Total # of Unreconciled Deferred Time CCO(s): (including this change)
475 Day(s)	**0** Day(s)	**381** Day(s)	**80** %	**7**

THIS CHANGE ORDER PROVIDES FOR:

compensation to the contractor for verified costs related to Department caused delays to the start of fabrication of the viaduct steel truss.

This contract was awarded on March 10, 2004 to construct a temporary detour for both eastbound and westbound I-80 traffic that allows for the tie in of the east span of the new San Francisco Oakland Bay Bridge (SFOBB) to Yerba Buena Island. The detour consist of three main structures, the east tie in to the bridge, the west tie in to the island and the viaduct structure between the two tie ins. The contract was awarded as a performance based project with the contractor responsible for meeting the design criteria specified in the contract.

This change order concerns a delay to the start of the steel fabrication caused by the implementation of Department design enhancements to the viaduct structure. The viaduct consists of 4 spans of a double deck steel truss approximately 20 meters wide and 320 meters long with a weight of over 4,300 metric tons.

During the design approval process, the main SFOBB Self Anchored Suspension Bridge (SAS) project, for which this project was a precursor, was incurring significant delay. This delay to the SAS resulted in the detour structure being in use for a significantly longer period than originally anticipated.

In order to satisfy the Department that the safety of the traveling public would be fully addressed, the Office of Structures Design requested several design enhancements to the steel truss concerning the connection of the floor beam and stringers and the addition of stopper blocks and brackets at the bent caps. These enhancements were implemented by the contractor's designer under Change Orders No. 49 and 50 and were incorporated into the contractor's approved viaduct plan sheets dated October 9, 2006. This change order addresses delay costs to the start of steel fabrication incurred by Dongkuk Structures & Construction Co., Ltd (Dongkuk), located in South Korea , that are associated with the design enhancements.

The contractor has submitted costs totaling to approximately $2,059,770 concerning a 2-month delay to the start of the viaduct steel fabrication from September 15 through November 20, 2006. Based on the as-planned schedule established by Dongkuk when they signed their purchase agreement with the contractor in June of 2006, fabrication was to begin on September 15, 2006. The actual start of fabrication began on November 21, 2006. It has been established that the Department is responsible for a considerable portion, if not all, of this delay period.

There were 2 major components that resulted in the of the 2-month delay to the start of fabrication. First and foremost was the Department design enhancements that were incorporated into the viaduct plan sheets dated October 9, 2006. These enhancements resulted in major revisions having to be made to Dongkuk's previously approved shop drawings which delayed the start of fabrication from approximately October 10 to November 21, 2006. This delay period has been recognized as Department caused delays.

The second component of the delay concerns the review and approval of Dongkuk's shop drawings that was performed by the contractor's designer of record. Dongkuk submitted their shop drawings to the contractor on August 10, 2006 with an anticipated review period of 21 calendar days based on the terms of their purchase agreement. This would have resulted in the return of the shop drawings by August 31, 2006 thus allowing for fabrication to start on September 15, 2006. The actual review by the contractor's designer took 35 days which delayed the start of fabrication.

ADA Notice: For individuals with sensory disabilities, this document is available in alternate formats. For information call: (916) 654-6410 or TDD (916) 654-3880 or write

While the shop drawing delay was the direct result of the contractor's own review, the Department is indirectly responsible for this delay due to the utilization of the designer's resources concerning the incorporation of the Department's design enhancements during this same period. This component of delay encompasses the period from September 15 to October 9, 2006 and the responsibility for the delay is still under review.

Based on the recognition of the October 10 to November 20, 2006 Department caused delay, this change order provides compensation for verified idle labor and equipment costs incurred during this delay period. To date $954,460.00 in costs have been verified and agreed to by the Department. This change order provides compensation for these verified costs in order provide timely payment to the contractor.

It is anticipated that further compensation shall be due the contractor upon further verification of claimed costs and an anticipated agreement concerning the responsibility of delay concerning the September 15 to October 9, 2006 delay period. Any additional costs shall be paid through a supplement to this change order.

Compensation shall be paid as an adjustment of compensation at an agreed lump sum of $954,460.00 which shall be financed from the contract's contingency funds. A cost estimate is on file.

Costs concerning the actual implementation of the Department design enhancements to the viaduct are being addressed separately under Change Order No. 79. Additional shipping escalation and jobsite costs concerning steel handling and erection due to the implementation of the viaduct design enhancements and the delay to fabrication are not addressed under this change and shall be compensated under Change Orders No. 80 and 88.

Maintenance concurrence is not required as the viaduct is a temporary structure and doesn't affect any permanent roadway features.

CONCURRED BY:		
Construction Engineer:	Mahantesh Anigol	Date 7/18/07
Bridge Engineer:	Bill Casey, Struct. Rep	Date 7/19/07
Project Engineer:	Hong Wong	Date 7/18/07
Project Manager:	Alec Melkonians	Date 7/20/07
FHWA Rep.:		Date
Environmental:		Date
Other (specify):	Robert Kobal, HQ Asst.Const.Coor	Date
Other (specify):		Date
District Prior Approval By:		Date
HQ (Issue Approve) By:	Ken Darby, HQ CCO Engineer	Date 7/19/07
Resident Engineer's Signature:	M. U. Anigol	Date 7/18/07

ESTIMATE OF COST

	THIS REQUEST	TOTAL TO DATE
ITEMS	$0.00	$0.00
FORCE ACCOUNT	$0.00	$0.00
AGREED PRICE	$0.00	$0.00
ADJUSTMENT	$954,460.00	$954,460.00
TOTAL	$954,460.00	$954,460.00

FEDERAL PARTICIPATION

☐ PARTICIPATING ☐ PARTICIPATING IN PART ☑ NONE
☐ NON-PARTICIPATING (MAINTENANCE) ☐ NON-PARTICIPATING

FEDERAL SEGREGATION (if more than one Funding Source or P.I.P. type)
☑ CCO FUNDED PER CONTRACT ☐ CCO FUNDED AS FOLLOWS

FEDERAL FUNDING SOURCE	PERCENT

ADA Notice: For individuals with sensory disabilities, this document is available in alternate formats. For information call: (916) 654-6410 or TDD (916) 654-3880 or write

CONTRACT CHANGE ORDER

Change Requested by: Engineer

CCO 88	Suppl. No. 1	Contract No. 04 - 0120R4	Road SF-80-12.6/13.2	FED. AID LOC.: ACBRIM-080-1(097)N

To: **CC MYERS INC**

You are directed to make the following changes from the plans and specifications or do the following described work not included in the plans and specifications for this contract. ***NOTE: This change order is not effective until approved by the Engineer.***

Description of work to be done, estimate of quantities and prices to be paid. (Segregate between additional work at contract price, agreed price and force account.) Unless otherwise stated, rates for rental of equipment cover only such time as equipment is actually used and no allowance will be made for idle time. This last percentage shown is the net accumulated increase or decrease from the original quantity in the Engineer's Estimate.

Adjustment of Compensation at Lump Sum:

Provide compensation to the Contractor for all outstanding costs incurred by Dongkuk Structures & Construction Co., Ltd (Dongkuk), located in South Korea, due to Department caused delays to the start of the fabrication of the steel viaduct of the Temporary Bypass Structure (Bridge No. 34-0006 (TEMP)).

For these costs, the Contractor will be compensated a lump sum of $776,630.00.

Except for any additional shop drawing or material purchase costs pertaining to the Department ordered design enhancements implemented within Imbsen & Associates Inc. approved viaduct plans dated October 9, 2006, this sum, along with the compensation paid under the original Change Order No. 88, constitutes full and final compensation, including all markups, for all additional costs incurred by Dongkuk prior to the actual start of the viaduct fabrication on November 21, 2006 due to any Department changes or delays to the viaduct fabrication.

Costs pertaining to delays at the Temporary Bypass Structure project site or the erection of the viaduct that may have been incurred due to Department changes or delays to the steel viaduct fabrication have not been considered herein and this change order doesn't preclude the Contractor from pursuing these costs.

Total Cost of Adjustment of Compensation at Lump Sum $776,630.00

Estimated Cost: **Increase** ☑ **Decrease** ☐ **$776,630.00**

By reason of this order the time of completion will be adjusted as follows: 0 days

Submitted by

Signature	Resident Engineer	Date
M. L. Anigol	MAHANTESH ANIGOL	8/20/07

Approval Recommended by

Signature	SFOBB Construction Manager	Date
Michael Forner	MIKE FORNER	8/20/07

Engineer Approval by

Signature	SFOBB Construction Manager	Date
Michael Forner	MIKE FORNER	9/17/07

We the undersigned contractor, have given careful consideration to the change proposed and agree, if this proposal is approved, that we will provide all equipment, furnish the materials, except as may otherwise be noted above, and perform all services necessary for the work above specified, and will accept as full payment therefor the prices shown above.

NOTE: If you, the contractor, do not sign acceptance of this order, your attention is directed to the requirements of the specifications as to proceeding with the ordered work and filing a written protest within the time therein specified.

Contractor Acceptance by

Signature	(Print name and title)	Date
[signature]	DANIEL E. HAUCK, PRESIDENT	9/14/07

STATE OF CALIFORNIA - DEPARTMENT OF TRANSPORTATION

CONTRACT CHANGE ORDER MEMORANDUM

RECEIVED 006785 DEC 14 5

TO: MIKE FORNER / DENNIS TURCHON	FILE: **E.A.** 04 - 0120R4
FROM: MAHANTESH ANIGOL	**CO-RTE-PM** SF-80-12.6/13.2
	FED. NO. ACBRIM-080-1(097)N
CCO#: **88** SUPPLEMENT#: **1** Category Code: **CHXX**	CONTINGENCY BALANCE (incl. this change) **$34,866,578.90**
COST: **$776,630.00** INCREASE ☑ DECREASE ☐	HEADQUARTERS APPROVAL REQUIRED? ☑ YES ☐ NO
SUPPLEMENTAL FUNDS PROVIDED: **$0.00**	IS THIS REQUEST IN ACCORDANCE WITH ENVIRONMENTAL DOCUMENTS? ☑ YES ☐ NO
CCO DESCRIPTION: VIA Fabrication Delays - Dongkuk	**PROJECT DESCRIPTION:** CONSTRUCT ROUTE 80 TEMP BYPASS STRUCTURE

Original Contract Time:	Time Adj. This Change:	Previously Approved CCO Time Adjustments:	Percentage Time Adjusted: (including this change)	Total # of Unreconciled Deferred Time CCO(s): (including this change)
475 Day(s)	**0** Day(s)	**381** Day(s)	**80** %	**7**

THIS CHANGE ORDER PROVIDES FOR:

compensation to the contractor for costs related to Department caused delays to the start of fabrication of the viaduct steel truss.

The original Change Order No. 88 provided partial compensation to the contractor for delay costs incurred due to Department ordered design enhancements to the steel viaduct of the Temporary Bypass Structure being constructed under this contract (See attached CCO No. 88 and memo). This change order provides additional compensation based upon additional verified costs and acts to close out all costs related to the delay incurred.

The original change order failed to provide compensation for the first several weeks of the delay period due to concerns that the fabricator wasn't prepared to begin work during that period regardless of the Department ordered changes to the work. The contractor has now satisfied these concerns and compensation is being provided for this period. In additional, consulting costs that were incurred by the fabricator in order to efficiently incorporate the design changes into their work have also be verified and are being compensated under this supplemental change order.

Compensation shall be paid as an adjustment of compensation at an agreed lump sum of $776,630.00 which shall be financed from the contract's contingency funds. A cost estimate is on file.

Costs concerning the actual implementation of the Department design enhancements to the viaduct are being addressed separately under Change Order No. 79. Additional shipping escalation and jobsite costs concerning steel handling and erection due to the implementation of the viaduct design enhancements and the delay to fabrication are not addressed under this change and shall be compensated under Change Orders No. 80 and 87.

There will be no adjustment to contract time with this change.

Maintenance concurrence is not required as the viaduct is a temporary structure and doesn't affect any permanent roadway features.

ADA Notice: For individuals with sensory disabilities, this document is available in alternate formats. For information call: (916) 654-6410 or TDD (916) 654-3880 or write Records and Forms Management, 1120 N Street, MS-89, Sacramento, CA 95814.

CONCURRED BY:		
Construction Engineer:	Mahantesh Anigol MA	Date 8/20/07
Bridge Engineer:	Bill Casey, Struct. Rep	Date
Project Engineer:	Hong Wong	Date
Project Manager:	Alec Melkonians	Date 8/17/07
FHWA Rep.:		Date
Environmental:		Date
Other (specify):	Robert Kobal, HQ Asst.Const.Coor	Date
Other (specify):		Date
District Prior Approval By:		Date
HQ (Issue Approve) By:	Ken Darby, HQ CCO Engineer	Date 8/22/07
Resident Engineer's Signature:	M.U. Anigol	Date 8/20/07

ESTIMATE OF COST		
	THIS REQUEST	TOTAL TO DATE
ITEMS	$0.00	$0.00
FORCE ACCOUNT	$0.00	$0.00
AGREED PRICE	$0.00	$0.00
ADJUSTMENT	$776,630.00	$1,731,090.00
TOTAL	$776,630.00	$1,731,090.00

FEDERAL PARTICIPATION

☐ PARTICIPATING ☐ PARTICIPATING IN PART ☐ NONE
☐ NON-PARTICIPATING (MAINTENANCE) ☑ NON-PARTICIPATING

FEDERAL SEGREGATION (if more than one Funding Source or P.I.P. type)
☑ CCO FUNDED PER CONTRACT ☐ CCO FUNDED AS FOLLOWS

FEDERAL FUNDING SOURCE	PERCENT

ADA Notice: For individuals with sensory disabilities, this document is available in alternate formats. For information call: (916) 654-6410 or TDD (916) 654-3880 or write Records and Forms Management, 1120 N Street, MS-89, Sacramento, CA 95814.

CONTRACT CHANGE ORDER

Change Requested by: Engineer

CCO 90 | Suppl. No. 0 | Contract No. 04 - 0120R4 | Road SF-80-12.6/13.2 | FED. AID LOC.: ACBRIM-080-1(097)N

To: **CC MYERS INC**

You are directed to make the following changes from the plans and specifications or do the following described work not included in the plans and specifications for this contract. ***NOTE: This change order is not effective until approved by the Engineer.***

Description of work to be done, estimate of quantities and prices to be paid. (Segregate between additional work at contract price, agreed price and force account.) Unless otherwise stated, rates for rental of equipment cover only such time as equipment is actually used and no allowance will be made for idle time. This last percentage shown is the net accumulated increase or decrease from the original quantity in the Engineer's Estimate.

Eliminate the planned construction of the East Tie-In portion of the Temporary Bypass Structure (Bridge No. 34-0006 (TEMP)) that is shown on the original contract plans and specified in the contract Special Provisions.

Estimate of Decrease in Contract Item at Contract Price:

Item No. 10: TEMPORARY BYPASS STRUCTURE EAST TIE-IN
-1 LS (-100.00%) 6,000,000.00 /LS = -$6,000,000.00 (-100.00%)

Total Cost for Decrease in Contract Item.....($6,000,000.00)

Extra Work at Force Account:

Provide for the off-site transportation and disposal of any soil classified as contaminated or hazardous based on soil testing results of the excavated soil, excluding drill spoils, from the work of this change order as determined by the Engineer.

Estimated Cost of Extra Work at Force Account $800,000.00

Extra Work at Lump Sum:

Perform all work shown on the plans and specifications of Sheets 4 through 227 of this change order for the construction of the Skid Bent piles and footings (A1E&W, A2E&W, A3E&W, A4E, A5E, A6E&W, B1E&W, B2E&W, B3E&W, B4E&W, B5E&W, and B6E&W), the construction of Bent 52A piles, footings, columns and bent cap and the modifications required to the Bent W3R footing to incorporate Skid Bent foundations B2W and B3W into that footing.

For this work, the Contractor shall be compensated a lump sum of $16,442,380.00. Except for the items of work specifically excluded below, this sum constitutes full and final compensation, including all markups, for all costs associated with the work of this change.

All modification made to the Bent W3R footing under this change order shall supersede the original plan sheets issued under Change Order No. 73 for that footing.

All work associated with the implementation and maintenance of the Contractor's Storm Water Pollution Prevention Plan, temporary erosion control (including concrete washouts),and the placement of all permanent erosion control shall be paid by the Department separately from this change order.

Flagging costs associated with this work shall be paid under Change Order No. 1 with these costs being paid at 50% by the Department. The remaining flagging costs are considered to be included in the lump sum payment made under this change order.

The work concerning furnishing and installing the Bent 52A bearings at the top of the bent cap, including furnishing and installing the masonry plate and placing the grout pad, is excluded from the work of this change order.

The installation of the anchor rod assemblies for the bearings at Bent 52A and the installation of all anchor rods for future attachment to the skid bent tower legs is included in the scope of this change order. Furnishing these anchor rod assemblies and anchor rods are excluded from the scope of this change order and shall be paid under Change Order No. 112.

All excavated soil from the foundations of skid bent footings A4E, A5E, A6 E&W, B4E&W, B5E&W, B6E&W and Bent 52A shall be stockpiled at the excavation site in order to allow for soil testing prior to its transport to the Contractor's stockpile site at the corner of Avenue H and 9th St. on Treasure Island. Costs associated with this stockpiling, including maintenance of the pile and soil testing, are included in the agreed lump sum price of this change. Any soil testing required for excavated soil from the remaining foundations shall be paid separately from this change order.

The agreed lump sum price provided under this change order is based on all excavated soil, excluding drill spoils, being stored either on-site or at the Contractor's stockpile site at the corner of Avenue H and 9th St. on Treasure Island and having that soil incorporated back into the work as backfill. In the event the soil needs to be disposed of off-site due to it being classified as contaminated or hazardous, all transportation and disposal costs for off-site disposal shall be paid as extra work at force account under this change order. In the event any non-contaminated soil cannot be incorporated back into the work and requires off-site disposal, all transportation and disposal costs for off-site disposal shall be paid separately from this change order.

All drill spoils associated with the work of this change shall be disposed of off-site. Costs associated with this disposal are included in the agreed lump sum price of this change.

Costs associated with the disposal of asphalt concrete and maintenance of on-site stockpiles for soil testing are included in the agreed lump sum price of this change.

The cost of structural backfill, incorporating soil from the stockpile site back into the work and the removal of temporary shoring is not included in the scope of this change and shall be paid separately from this change order.

The agreed lump sum price provided under this change order is based on temporary shoring being installed at the following locations:

1) Skid Bent foundations A6E&W and B6E&W (completely shored).
2) Bent 52A foundation 52AS (southern end of foundation only).
3) Skid Bent foundation B4E (soil nail wall at northern end of foundation only).

Should additional temporary shoring be required to perform the work of this change order, installation costs for this shoring shall be paid separately from this change order.

The Engineer shall establish lines and grades required for the completion of this work in accordance with Section 5-1.07 of the Standard Specifications.

Total Cost of Extra Work at Lump Sum $16,442,380.00

Adjustment of Compensation at Lump Sum:

Provide compensation to the Contractor for all costs associated with work performed and any costs incurred on Item No. 10 - Temporary Bypass Structure, East Tie-In prior to the elimination of that item of work. For these costs, the Contractor shall be compensated an agreed lump sum of $66,000.00. This sum constitutes full and final compensation, including all markups, for all costs incurred on Item No. 10.

Total Cost of Adjustment of Compensation at Lump Sum $66,000.00

All payment clauses contained within the specifications of this change order are superseded by the agreed lump sum and force account payment methods specified above.

CONTRACT CHANGE ORDER

Change Requested by: Engineer

CCO 90 | Suppl. No. 0 | Contract No. 04 - 0120R4 | Road SF-80-12.6/13.2 | FED. AID LOC.: ACBRIM-080-1(097)N

Estimated Cost: Increase ☑ Decrease ☐ $11,308,380.00

By reason of this order the time of completion will be adjusted as follows: Deferred

Submitted by

Signature	Resident Engineer	Date
	BILL CASEY	3-14-08

Approval Recommended by

Signature	SFOBB Construction Manager	Date
Mike Forner	MIKE FORNER	3/17/08

Engineer Approval by

Signature	SFOBB Construction Manager	Date
Mike Forner	MIKE FORNER	4-14-08

We the undersigned contractor, have given careful consideration to the change proposed and agree, if this proposal is approved, that we will provide all equipment, furnish the materials, except as may otherwise be noted above, and perform all services necessary for the work above specified, and will accept as full payment therefor the prices shown above.

NOTE: If you, the contractor, do not sign acceptance of this order, your attention is directed to the requirements of the specifications as to proceeding with the ordered work and filing a written protest within the time therein specified.

Contractor Acceptance by

Signature	(Print name and title)	Date
	DANIEL E HUMICK, PRESIDENT	4/09/08

T.Y.LIN INTERNATIONAL
MOFFATT & NICHOL ENGINEERS
a joint venture

SFOBB TEMPORARY BYPASS STRUCTURE

EAST TIE-IN SEGMENT
ROLL – OUT ROLL – IN

100% CONCRETE SUBSTRUCTURE SPECIFICATIONS

BRIDGE NO. 34-0006 (TEMP)

Location: 04-SF-80-12.6/13.2
EA No.: 0120R4

Project Title: South/South Detour – San Francisco-Oakland Bay Bridge
Project No.: 1295

Client: Caltrans

Volume 1 of 1

November 14, 2007

CONTRACT NO. 04-0120R4

CONTRACT CHANGE ORDER NO 90

SHEET 4 OF 27

CONTRACT NO. 04-0120R4

The special provisions contained herein have been prepared by or under the direction of the following Registered Persons.

STRUCTURES

REGISTERED CIVIL ENGINEER

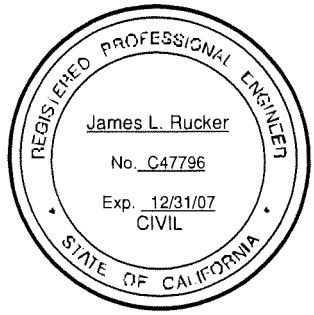

CONTRACT NO. 04-012084

CONTRACT CHANGE ORDER NO 90

SHEET 5 OF 27

TABLE OF CONTENTS

AMENDMENTS TO JULY 1999 STANDARD SPECIFICATIONS 4
5-1.__ PROJECT INFORMATION 156
5-1.__ HAZARDOUS MATERIAL, GENERAL 157
APPLICABLE RULES AND REGULATIONS 157
PERMITS AND LICENSES 157
SITE HEALTH AND SAFETY PLAN 158
SAFETY TRAINING 158
PAYMENT 158
8-3.__ WELDING 158
WELDING QUALITY CONTROL 162
PAYMENT 166
SECTION 9. DESCRIPTION OF BRIDGE WORK 166
SECTION 10. CONSTRUCTION DETAILS 166
SECTION 10-1. GENERAL 166
10-1.__ CONSTRUCTION SURVEYING 166
PAYMENT 168
10-1.__ EARTHWORK 168
HAZARDOUS MATERIAL EXCAVATION 168
SAMPLING AND ANALYSIS 169
MEASUREMENT AND PAYMENT 170
10-1.__ PILING 170
GENERAL 170
CAST-IN-DRILLED-HOLE CONCRETE PILES 170
STEEL PIPE PILING 184
MEASUREMENT AND PAYMENT (PILING) 186
10-1.__ CONCRETE STRUCTURES 186
GENERAL 187
ELASTOMERIC BEARING PADS 187
MEASUREMENT AND PAYMENT 188
10-1.__ REINFORCEMENT 188
10-1.__ HEADED BAR REINFORCEMENT 188
GENERAL 188
PRODUCTION TESTS 189
MEASUREMENT AND PAYMENT 190
10-1.__ MISCELLANEOUS METAL (BRIDGE) 191

CONTRACT NO. 04-0120R4

CONTRACT CHANGE ORDER NO 90

SHEET 6 OF 27

AMENDMENTS TO JULY 1999 STANDARD SPECIFICATIONS

UPDATED OCTOBER 19, 2007

SECTION 0: GLOBAL REVISIONS

Issue Date: August 17, 2007

Blank

SECTION 1: DEFINITIONS AND TERMS

Issue Date: October 19, 2007

Section 1-1.01, "General," of the Standard Specifications is amended by adding the following:

- The Department is gradually changing the style and language of the specifications. The new style and language includes:

1. Use of:

    1.1. Imperative mood
    1.2. Introductory modifiers
    1.3. Conditional clauses

2. Elimination of:

    2.1. Language variations
    2.2. Definitions for industry-standard terms
    2.3. Redundant specifications
    2.4. Needless cross-references

- The use of this new style does not change the meaning of a specification not yet using this style.
- The specifications are written to the Bidder before award and the Contractor after. Before award, interpret sentences written in the imperative mood as starting with "The Bidder must" and interpret "you" as "the Bidder" and "your" as "the Bidder's." After award, interpret sentences written in the imperative mood as starting with "The Contractor must" and interpret "you" as "the Contractor" and "your" as "the Contractor's."
- Unless an object or activity is specified to be less than the total, the quantity or amount is all of the object or activity.
- All items in a list apply unless the items are specified as choices.
- Interpret terms as defined in the Contract documents. A term not defined in the Contract documents has the meaning defined in Means Illustrated Construction Dictionary, Condensed Version, Second Edition.

The 1st table in Section 1-1.02, "Abbreviations," of the Standard Specifications is amended by adding:

SSPC	The Society for Protective Coatings

Section 1, "Definitions and Terms," of the Standard Specifications is amended by adding the following sections:

1-1.082 BUSINESS DAY

- Day on the calendar except Saturday or holiday.

1-1.084 CALIFORNIA MANUAL ON UNIFORM TRAFFIC CONTROL DEVICES

- The California Manual on Uniform Traffic Control Devices for Streets and Highways (California MUTCD) is issued by the Department of Transportation and is the Federal Highway Administration's MUTCD 2003 Edition, as amended for use in California. Part 6 of the California MUTCD, "Temporary Traffic Control," supersedes the Department's Manual of Traffic Controls.

1-1.125 DEDUCTION

- Amount of money permanently taken from progress payment and final payment. Deductions are cumulative and are not retentions under Pub Cont Code § 7107.

1-1.205 FEDERAL-AID CONTRACT

- Contract that has a Federal-aid project number on the cover of the Notice to Contractors and Special Provisions.

1-1.245 HOLIDAY

1. Every Sunday
2. January 1st, New Year's Day
3. 3rd Monday in January, Birthday of Martin Luther King, Jr.
4. February 12th, Lincoln's Birthday
5. 3rd Monday in February, Washington's Birthday
6. March 31st, Cesar Chavez Day
7. Last Monday in May, Memorial Day
8. July 4th, Independence Day
9. 1st Monday in September, Labor Day
10. 2nd Monday in October, Columbus Day
11. November 11th, Veterans Day
12. 4th Thursday in November, Thanksgiving Day
13. 4th Friday in November, Day after Thanksgiving Day
14. December 25th, Christmas Day

- If January 1st, February 12th, March 31st, July 4th, November 11th, or December 25th falls on a Sunday, the Monday following is a holiday. If November 11th falls on a Saturday, the preceding Friday is a holiday.

1-1.475 WITHHOLD

• Money temporarily or permanently taken from progress payment. Withholds are cumulative and are not retentions under Pub Cont Code § 7107.

Section 1-1.25, "Laboratory," of the Standard Specifications is amended to read:

1-1.25 LABORATORY

• The Division of Engineering Services - Materials Engineering and Testing Services and Division of Engineering Services - Geotechnical Services of the Department of Transportation, or established laboratories of the various Districts of the Department, or other laboratories authorized by the Department to test materials and work involved in the contract. When a reference is made in the specifications to the "Transportation Laboratory," the reference shall mean Division of Engineering Services - Materials Engineering and Testing Services and Division of Engineering Services - Geotechnical Services, located at 5900 Folsom Boulevard, Sacramento, CA 95819, Telephone (916) 227-7000.

Section 1-1.255, "Legal Holidays," of the Standard Specifications is deleted.

Section 1-1.265, "Manual of Traffic Controls," of the Standard Specifications is deleted.

Section 1-1.275, "Office of Structure Design," of the Standard Specifications is amended to read:

1-1.275 OFFICES OF STRUCTURE DESIGN

• The Offices of Structure Design of the Department of Transportation. When the specifications require working drawings to be submitted to the Offices of Structure Design, the drawings shall be submitted to: Offices of Structure Design, Documents Unit, Mail Station 9-4/4I, 1801 30th Street, Sacramento, CA 95816, Telephone (916) 227-8252.

Section 1-1.39, "State," of the Standard Specifications is amended to read:

1-1.39 STATE

• The State of California, including its agencies, departments, or divisions, whose conduct or action is related to the work.

SECTION 2: PROPOSAL REQUIREMENTS AND CONDITIONS

Issue Date: June 19, 2003

Section 2-1.03, "Examination of Plans, Specifications, Contract, and Site of Work," of the Standard Specifications is amended to read:

2-1.03 Examination of Plans, Specifications, Contract, and Site of Work

• The bidder shall examine carefully the site of the work contemplated, the plans and specifications, and the proposal and contract forms therefor. The submission of a bid shall be conclusive evidence that the bidder has investigated and is satisfied as to the general and local conditions to be encountered, as to the character, quality and scope of work to be performed, the

quantities of materials to be furnished and as to the requirements of the proposal, plans, specifications and the contract.

- The submission of a bid shall also be conclusive evidence that the bidder is satisfied as to the character, quality and quantity of surface and subsurface materials or obstacles to be encountered insofar as this information was reasonably ascertainable from an inspection of the site and the records of exploratory work done by the Department as shown in the bid documents, as well as from the plans and specifications made a part of the contract.
- Where the Department has made investigations of site conditions including subsurface conditions in areas where work is to be performed under the contract, or in other areas, some of which may constitute possible local material sources, bidders or contractors may, upon written request, inspect the records of the Department as to those investigations subject to and upon the conditions hereinafter set forth.
- Where there has been prior construction by the Department or other public agencies within the project limits, records of the prior construction that are currently in the possession of the Department and which have been used by, or are known to, the designers and administrators of the project will be made available for inspection by bidders or contractors, upon written request, subject to the conditions hereinafter set forth. The records may include, but are not limited to, as-built drawings, design calculations, foundation and site studies, project reports and other data assembled in connection with the investigation, design, construction and maintenance of the prior projects.
- Inspection of the records of investigations and project records may be made at the office of the district in which the work is situated, or in the case of records of investigations related to structure work, at the Transportation Laboratory in Sacramento, California.
- When a log of test borings or other record of geotechnical data obtained by the Department's investigation of surface and subsurface conditions is included with the contract plans, it is furnished for the bidders' or Contractor's information and its use shall be subject to the conditions and limitations set forth in this Section 2-1.03.
- In some instances, information considered by the Department to be of possible interest to bidders or contractors has been compiled as "Materials Information." The use of the "Materials Information" shall be subject to the conditions and limitations set forth in this Section 2-1.03 and Section 6-2, "Local Materials."
- When cross sections are not included with the plans, but are available, bidders or contractors may inspect the cross sections and obtain copies for their use, at their expense.
- When cross sections are included with the contract plans, it is expressly understood and agreed that the cross sections do not constitute part of the contract, do not necessarily represent actual site conditions or show location, character, dimensions and details of work to be performed, and are included in the plans only for the convenience of bidders and their use is subject to the conditions and limitations set forth in this Section 2-1.03.
- When contour maps were used in the design of the project, the bidders may inspect those maps, and if available, they may obtain copies for their use.
- The availability or use of information described in this Section 2-1.03 is not to be construed in any way as a waiver of the provisions of the first paragraph in this Section 2-1.03 and bidders and contractors are cautioned to make independent investigations and examinations as they deem necessary to be satisfied as to conditions to be encountered in the performance of the work and, with respect to possible local material sources, the quality and quantity of material available from the property and the type and extent of processing that may be required in order to produce material conforming to the requirements of the specifications.
- The Department assumes no responsibility for conclusions or interpretations made by a bidder or contractor based on the information or data made available by the Department. The

Department does not assume responsibility for representation made by its officers or agents before the execution of the contract concerning surface or subsurface conditions, unless that representation is expressly stated in the contract.

- No conclusions or interpretations made by a bidder or contractor from the information and data made available by the Department will relieve a bidder or contractor from properly fulfilling the terms of the contract.

SECTION 3: AWARD AND EXECUTION OF CONTRACT

Issue Date: August 17, 2007

Section 3, "Award and Execution of Contract," of the Standard Specifications is amended by adding the following section after Section 3-1.02, "Contract Bonds":

3-1.025 INSURANCE POLICIES

- The successful bidder shall submit:

1. Copy of its commercial general liability policy and its excess policy or binder until such time as a policy is available, including the declarations page, applicable endorsements, riders, and other modifications in effect at the time of contract execution. Standard ISO form No. CG 0001 or similar exclusions are allowed if not inconsistent with Section 7-1.12, "Indemnification and Insurance." Allowance of additional exclusions is at the discretion of the Department.
2. Certificate of insurance showing all other required coverages. Certificates of insurance, as evidence of required insurance for the auto liability and any other required policy, shall set forth deductible amounts applicable to each policy and all exclusions that are added by endorsement to each policy. The evidence of insurance shall provide that no cancellation, lapse, or reduction of coverage will occur without 10 days prior written notice to the Department.
3. A declaration under the penalty of perjury by a certified public accountant certifying the accountant has applied Generally Accepted Accounting Principles (GAAP) guidelines confirming the successful bidder has sufficient funds and resources to cover any self-insured retentions if the self-insured retention is $50 000 or higher.

- If the successful bidder uses any form of self-insurance for workers compensation in lieu of an insurance policy, it shall submit a certificate of consent to self-insure in accordance with the provisions of Section 3700 of the Labor Code.

Section 3-1.03, "Execution of Contract," of the Standard Specifications is amended to read:

3-1.03 EXECUTION OF CONTRACT

- The contract shall be signed by the successful bidder and returned, together with the contract bonds and the documents identified in Section 3-1.025, "Insurance Policies," within 10 business days of receiving the contract for execution.

Section 3-1.04, "Failure to Execute Contract," of the Standard Specifications is amended to read:

3-1.04 FAILURE TO EXECUTE CONTRACT

• Failure of the lowest responsible bidder, the second lowest responsible bidder, or the third lowest responsible bidder to execute the contract as required in Section 3-1.03, "Execution of Contract," within 10 business days of receiving the contract for execution shall be just cause for the forfeiture of the proposal guaranty. The successful bidder may file with the Department a written notice, signed by the bidder or the bidder's authorized representative, specifying that the bidder will refuse to execute the contract if it is presented. The filing of this notice shall have the same force and effect as the failure of the bidder to execute the contract and furnish acceptable bonds within the time specified.

Section 3-1.05, "Return of Proposal Guaranties," of the Standard Specifications is amended to read:

3-1.05 RETURN OF PROPOSAL GUARANTIES

• The Department keeps the proposal guaranties of the 1st, 2nd and 3rd lowest responsible bidders until the contract has been executed. The other bidders' guaranties, other than bidders' bonds, are returned upon determination of the 1st, 2nd, and 3rd apparent lowest bidders, and their bidders' bonds are of no further effect.

SECTION 4: SCOPE OF WORK

Issue Date: August 17, 2007

Section 4-1.01, "Intent of Plans and Specifications," of the Standard Specifications is amended by adding the following:

• Nothing in the specifications voids the Contractor's public safety responsibilities.

SECTION 5: CONTROL OF WORK

Issue Date: October 19, 2007

Section 5, "Control of Work," of the Standard Specifications is amended by adding the following sections:

5-1.005 GENERAL

• Failure to comply with any specification part is a breach of the contract and a waiver of your right to time or payment adjustment.

• After contract approval, submit documents and direct questions to the Engineer. Orders, approvals, and requests to the Contractor are by the Engineer.

• The Engineer furnishes the following in writing:

1. Approvals
2. Notifications
3. Orders

• The Contractor must furnish the following in writing:

1. Assignments
2. Notifications
3. Proposals
4. Requests, sequentially numbered
5. Subcontracts
6. Test results

- The Department rejects a form if it has any error or any omission.
- Convert foreign language documents to English.
- Use contract administration forms available at the Department's Web site.
- If the last day for submitting a document falls on a Saturday or holiday, it may be submitted on the next business day with the same effect as if it had been submitted on the day specified.

5-1.015 RECORD RETENTION, INSPECTION, COPYING, AND AUDITING

- Retain project records and make them available for inspection, copying, and auditing by State representatives from bid preparation through:

1. Final payment
2. Resolution of claims, if any

- For at least 3 years after the later of these, retain and make available for inspection, copying, and auditing cost records by State representatives including:

1. Records pertaining to bid preparation
2. Overhead
3. Payroll records and certified payroll
4. Payments to suppliers and subcontractors
5. Cost accounting records
6. Records of subcontractors and suppliers

- Maintain the records in an organized way in the original format, electronic and hard copy, conducive to professional review and audit.
- Before contract acceptance, the State representative notifies the Contractor, subcontractor, or supplier 5 days before inspection, copying, or auditing.
- If an audit is to start more than 30 days after contract acceptance, the State representative notifies the Contractor, subcontractor, or supplier when the audit is to start.

Section 5-1.01, "Authority of Engineer," of the Standard Specifications is amended by adding:

- Failure to enforce a contract provision does not waive enforcement of any contract provision.

Section 5-1.02A, "Trench Excavation Safety Plans," of the Standard Specifications is amended to read:

5-1.02A Excavation Safety Plans

- The Construction Safety Orders of the Division of Occupational Safety and Health shall apply to all excavations. For all excavations 1.5 m or more in depth, the Contractor shall submit to the Engineer a detailed plan showing the design and details of the protective systems to be provided for worker protection from the hazard of caving ground during excavation. The detailed plan shall include any tabulated data and any design calculations used in the preparation of the plan. Excavation shall not begin until the detailed plan has been reviewed and approved by the Engineer.
- Detailed plans of protective systems for which the Construction Safety Orders require design by a registered professional engineer shall be prepared and signed by an engineer who is registered as a Civil Engineer in the State of California, and shall include the soil classification, soil properties, soil design calculations that demonstrate adequate stability of the protective system, and any other design calculations used in the preparation of the plan.
- No plan shall allow the use of a protective system less effective than that required by the Construction Safety Orders.
- If the detailed plan includes designs of protective systems developed only from the allowable configurations and slopes, or Appendices, contained in the Construction Safety Orders, the plan shall be submitted at least 5 days before the Contractor intends to begin excavation. If the detailed plan includes designs of protective systems developed from tabulated data, or designs for which design by a registered professional engineer is required, the plan shall be submitted at least 3 weeks before the Contractor intends to begin excavation.
- Attention is directed to Section 7-1.01E, "Trench Safety."

Section 5-1.04, "Coordination and Interpretation of Plans, Standard Specifications, and Special Provisions," of the Standard Specifications is amended to read:

5-1.04 CONTRACT COMPONENTS

- A component in one contract part applies as if appearing in each. The parts are complementary and describe and provide for a complete work.
- If a discrepancy exists:

1. The governing ranking of contract parts in descending order is:

    1.1. Special provisions
    1.2. Project plans
    1.3. Revised Standard Plans
    1.4. Standard Plans
    1.5. Amendments to the Standard Specifications
    1.6. Standard Specifications
    1.7. Project information

2. Written numbers and notes on a drawing govern over graphics
3. A detail drawing governs over a general drawing
4. A detail specification governs over a general specification
5. A specification in a section governs over a specification referenced by that section

- If a discrepancy is found or confusion arises, request correction or clarification.

Section 5-1.07, "Lines and Grades," of the Standard Specifications is replaced with the following:

5-1.07 LINES AND GRADES

- The Engineer places stakes and marks under Chapter 12, "Construction Surveys," of the Department's Surveys Manual.
- Submit your request for Department-furnished stakes:

1. On a Request for Construction Stakes form. Ensure:

    1.1. Requested staking area is ready for stakes
    1.2. You use the stakes in a reasonable time

2. A reasonable time before starting an activity using the stakes

- Establish priorities for stakes and note priorities on the request.
- Preserve stakes and marks placed by the Engineer. If the stakes or marks are destroyed, the Engineer replaces them at the Engineer's earliest convenience and deducts the cost.

SECTION 6: CONTROL OF MATERIALS

Issue Date: August 17, 2007

Section 6-1.05, "Trade Names and Alternatives," of the Standard Specifications is amended to read:

6-1.05 Specific Brand or Trade Name and Substitution

- A reference to a specific brand or trade name establishes a quality standard and is not intended to limit competition. You may use a product that is equal to or better than the specified brand or trade name if approved.
- Submit a substitution request within a time period that:

1. Follows Contract award
2. Allows 30 days for review
3. Causes no delay

- Include substantiating data with the substitution request that proves the substitution:

1. Is of equal or better quality and suitability
2. Causes no delay in product delivery and installation

Section 6, "Control of Materials," of the Standard Specifications is amended by adding the following sections:

6-1.085 BUY AMERICA (23 CFR 635.410)

- For a Federal-aid contract, furnish steel and iron materials to be incorporated into the work that are produced in the United States except:

1. Foreign pig iron and processed, pelletized, and reduced iron ore may be used in the domestic production of the steel and iron materials [60 Fed Reg 15478 (03/24/1995)]
2. If the total combined cost of the materials does not exceed the greater of 0.1 percent of the total bid or $2 500, material produced outside the United States may be used

- Production includes:

1. Processing steel and iron materials, including smelting or other processes that alter the physical form or shape (such as rolling, extruding, machining, bending, grinding, and drilling) or chemical composition
2. Coating application, including epoxy coating, galvanizing, and painting, that protects or enhances the value of steel and iron materials

- For steel and iron materials to be incorporated into the work, submit a Certificate of Compliance under Section 6-1.07, "Certificates of Compliance," of the Standard Specifications that certifies all production processes occurred in the United States except for the above exceptions.

6-1.087 BUY AMERICA (PUB RES CODE § 42703(d))

- Furnish crumb rubber to be incorporated into the work that is produced in the United States and is derived from waste tires taken from vehicles owned and operated in the United States.
- For crumb rubber to be incorporated into the work, submit a Certificate of Compliance under Section 6-1.07, "Certificates of Compliance," of the Standard Specifications that certifies only crumb rubber manufactured in the United States and derived from waste tires taken from vehicles owned and operated in the United States is used.

The 7th and 8th paragraph of Section 6-2.01, "General," of the Standard Specifications are amended to read:

- Upon the Contractor's written request, the Department tests materials from an untested local source. If satisfactory material from that source is used in the work, the Department does not charge the Contractor for the tests; otherwise, the Department deducts the test cost.

The 2nd sentence of the 7th paragraph of Section 6-2.02, "Possible Local Material Sources," of the Standard Specifications is amended to read:

- The Department deducts the charges for the removed material.

SECTION 7: LEGAL RELATIONS AND RESPONSIBILITY

Issue Date: August 17, 2007

Section 7-1.01, "Laws To Be Observed," of the Standard Specifications is amended to read:

7-1.01 LAWS TO BE OBSERVED

- Comply with laws, orders, decrees, and permits. Indemnify and defend the State against any claim or liability arising from the violation of a law, order, decree, or permit by you or your

employees. Immediately report to the Engineer in writing a discrepancy or inconsistency between the contract and a law, order, decree, or permit.

The 3rd listed requirement of the 1st paragraph of Section 7-1.01A(2), "Prevailing Wage," of the Standard Specifications is amended to read:

3. Upon becoming aware of the subcontractor's failure to pay the specified prevailing rate of wages to the subcontractor's workers, the Contractor must diligently take corrective action to stop or rectify the failure, including withholding sufficient funds due the subcontractor for work performed on the public works project.

The 2nd paragraph of Section 7-1.01A(2), "Prevailing Wage," of the Standard Specifications is amended to read:

• Pursuant to Section 1775 of the Labor Code, the Division of Labor Standards Enforcement must notify the Contractor on a public works project within 15 days of the receipt by the Division of Labor Standards Enforcement of a complaint of the failure of a subcontractor on that public works project to pay workers the general prevailing rate of per diem wages. If the Division of Labor Standards Enforcement determines that employees of a subcontractor were not paid the general prevailing rate of per diem wages and if the Department did not withhold sufficient money under the contract to pay those employees the balance of wages owed under the general prevailing rate of per diem wages, the Contractor must withhold an amount of moneys due the subcontractor sufficient to pay those employees the general prevailing rate of per diem wages if requested by the Division of Labor Standards Enforcement. The Contractor must pay any money withheld from and owed to a subcontractor upon receipt of notification by the Division of Labor Standards Enforcement that the wage complaint has been resolved. If notice of the resolution of the wage complaint has not been received by the Contractor within 180 days of the filing of a valid notice of completion or acceptance of the public works project, whichever occurs later, the Contractor must pay all moneys withheld from the subcontractor to the Department. The Department withholds these moneys pending the final decision of an enforcement action.

The 2nd paragraph of Section 7-1.01A(3), "Payroll Records," of the Standard Specifications is amended to read:

• The Department withholds the penalties specified in subdivision (g) of Labor Code § 1776 for noncompliance with the requirements in Section 1776.

The 4th paragraph of Section 7-1.01A(3), "Payroll Records," of the Standard Specifications is amended to read:

• The Department withholds for delinquent or inadequate payroll records (Labor Code § 1771.5). If the Contractor has not submitted an adequate payroll record by the month's 15th day for the period ending on or before the 1st of that month, the Department withholds 10 percent of the monthly progress estimate, exclusive of mobilization. The Department does not withhold more than $10 000 or less than $1000.

The 5th paragraph of Section 7-1.01A(3), "Payroll Records," of the Standard Specifications is deleted.

The eighth paragraph of Section 7-1.09, "Public Safety," of the Standard Specifications is amended to read:

• Signs, lights, flags, and other warning and safety devices and their use shall conform to the requirements set forth in Part 6 of the California MUTCD. Signs or other protective devices furnished and erected by the Contractor, at the Contractor's expense, as above provided, shall not obscure the visibility of, nor conflict in intent, meaning and function of either existing signs, lights and traffic control devices or any construction area signs and traffic control devices for which furnishing of, or payment for, is provided elsewhere in the specifications. Signs furnished and erected by the Contractor, at the Contractor's expense, shall be approved by the Engineer as to size, wording and location.

The fourteenth paragraph of Section 7-1.09, "Public Safety," of the Standard Specifications is amended to read:

• The Contractor shall notify the Engineer not less than 18 days and no more than 90 days prior to the anticipated start of an operation that will change the vertical or horizontal clearance available to public traffic (including shoulders).

The sixteenth paragraph of Section 7-1.09, "Public Safety," of the Standard Specifications is amended to read:

• When vertical clearance is temporarily reduced to 4.72 m or less, low clearance warning signs shall be placed in accordance with Part 2 of the California MUTCD and as directed by the Engineer. Signs shall conform to the dimensions, color, and legend requirements of the California MUTCD and these specifications except that the signs shall have black letters and numbers on an orange retroreflective background. W12-2P signs shall be illuminated so that the signs are clearly visible.

Section 7-1.01A(6), "Workers' Compensation," of the Standard Specifications is amended to read:

7-1.101A(6) (Blank)

The last sentence of the 2nd paragraph of Section 7-1.11, "Preservation of Property," of the Standard Specifications is amended to read:

• The cost of the repairs must be borne by the Contractor and will be deducted.

Section 7-1.12, "Indemnification and Insurance," of the Standard Specifications is amended to read:

7-1.12 INDEMNIFICATION AND INSURANCE

• The Contractor's obligations regarding indemnification of the State of California and the requirements for insurance shall conform to the provisions in Section 3-1.025, "Insurance Policies," and Sections 7-1.12A, "Indemnification," and 7-1.12B, "Insurance," of this Section 7-1.12.

7-1.12A Indemnification

• The Contractor shall defend, indemnify, and save harmless the State, including its officers, employees, and agents (excluding agents who are design professionals) from any and all claims, demands, causes of action, damages, costs, expenses, actual attorneys' fees, losses or liabilities, in law or in equity (Section 7-1.12A Claims) arising out of or in connection with the Contractor's performance of this contract for:

1. Bodily injury including, but not limited to, bodily injury, sickness or disease, emotional injury or death to persons, including, but not limited to, the public, any employees or agents of the Contractor, the State, or any other contractor; and
2. Damage to property of anyone including loss of use thereof; caused or alleged to be caused in whole or in part by any negligent or otherwise legally actionable act or omission of the Contractor or anyone directly or indirectly employed by the Contractor or anyone for whose acts the Contractor may be liable.

• Except as otherwise provided by law, these requirements apply regardless of the existence or degree of fault of the State. The Contractor is not obligated to indemnify the State for Claims arising from conduct delineated in Civil Code Section 2782 and to Claims arising from any defective or substandard condition of the highway that existed at or before the start of work, unless this condition has been changed by the work or the scope of the work requires the Contractor to maintain existing highway facilities and the Claim arises from the Contractor's failure to maintain. The Contractor's defense and indemnity obligation shall extend to Claims arising after the work is completed and accepted if the Claims are directly related to alleged acts or omissions by the Contractor that occurred during the course of the work. State inspection is not a waiver of full compliance with these requirements.

• The Contractor's obligation to defend and indemnify shall not be excused because of the Contractor's inability to evaluate liability or because the Contractor evaluates liability and determine that the Contractor is not liable. The Contractor shall respond within 30 days to the tender of any Claim for defense and indemnity by the State, unless this time has been extended by the State. If the Contractor fails to accept or reject a tender of defense and indemnity within 30 days, in addition to any other remedy authorized by law, the Department may withhold such funds the State reasonably considers necessary for its defense and indemnity until disposition has been made of the Claim or until the Contractor accepts or rejects the tender of defense, whichever occurs first.

• With respect to third-party claims against the Contractor, the Contractor waives all rights of any type to express or implied indemnity against the State, its officers, employees, or agents (excluding agents who are design professionals).

• Nothing in the Contract is intended to establish a standard of care owed to any member of the public or to extend to the public the status of a third-party beneficiary for any of these indemnification specifications.

7-1.12B Insurance

7-1.12B(1) General

• Nothing in the contract is intended to establish a standard of care owed to any member of the public or to extend to the public the status of a third-party beneficiary for any of these insurance specifications.

7-1.12B(2) Casualty Insurance

• The Contractor shall procure and maintain insurance on all of its operations with companies acceptable to the State as follows:

1. The Contractor shall keep all insurance in full force and effect from the beginning of the work through contract acceptance.
2. All insurance shall be with an insurance company with a rating from A.M. Best Financial Strength Rating of A- or better and a Financial Size Category of VII or better.
3. The Contractor shall maintain completed operations coverage with a carrier acceptable to the State through the expiration of the patent deficiency in construction statute of repose set forth in Code of Civil Procedure Section 337.1.

7-1.12B(3) Workers' Compensation and Employer's Liability Insurance

• In accordance with Labor Code Section 1860, the Contractor shall secure the payment of worker's compensation in accordance with Labor Code Section 3700.

• In accordance with Labor Code Section 1861, the Contractor shall submit to the Department the following certification before performing the work:

> I am aware of the provisions of Section 3700 of the Labor Code which require every employer to be insured against liability for workers' compensation or to undertake self-insurance in accordance with the provisions of that code, and I will comply with such provisions before commencing the performance of the work of this contract.

• Contract execution constitutes certification submittal.

• The Contractor shall provide Employer's Liability Insurance in amounts not less than:

1. $1 000 000 for each accident for bodily injury by accident
2. $1 000 000 policy limit for bodily injury by disease
3. $1 000 000 for each employee for bodily injury by disease

• If there is an exposure of injury to the Contractor's employees under the U.S. Longshoremen's and Harbor Workers' Compensation Act, the Jones Act, or under laws, regulations, or statutes applicable to maritime employees, coverage shall be included for such injuries or claims.

7-1.12B(4) Liability Insurance

7-1.12B(4)(a) General

• The Contractor shall carry General Liability and Umbrella or Excess Liability Insurance covering all operations by or on behalf of the Contractor providing insurance for bodily injury liability and property damage liability for the following limits and including coverage for:

1. Premises, operations, and mobile equipment
2. Products and completed operations
3. Broad form property damage (including completed operations)
4. Explosion, collapse, and underground hazards
5. Personal injury
6. Contractual liability

7-1.12B(4)(b) Liability Limits/Additional Insureds

- The limits of liability shall be at least the amounts shown in the following table:

Total Bid	For Each Occurrence[1]	Aggregate for Products/Completed Operation	General Aggregate[2]	Umbrella or Excess Liability[3]
≤$1 000 000	$1 000 000	$2 000 000	$2 000 000	$5 000 000
>$1 000 000 ≤$5 000 000	$1 000 000	$2 000 000	$2 000 000	$10 000 000
>$5 000 000 ≤$25 000 000	$2 000 000	$2 000 000	$4 000 000	$15 000 000
>$25 000 000	$2 000 000	$2 000 000	$4 000 000	$25 000 000

1. Combined single limit for bodily injury and property damage.
2. This limit shall apply separately to the Contractor's work under this contract.
3. The umbrella or excess policy shall contain a clause stating that it takes effect (drops down) in the event the primary limits are impaired or exhausted.

- The Contractor shall not require certified Small Business subcontractors to carry Liability Insurance that exceeds the limits in the table above. Notwithstanding the limits specified herein, at the option of the Contractor, the liability insurance limits for certified Small Business subcontractors of any tier may be less than those limits specified in the table. For Small Business subcontracts, "Total Bid" shall be interpreted as the amount of subcontracted work to a certified Small Business.
- The State, including its officers, directors, agents (excluding agents who are design professionals), and employees, shall be named as additional insureds under the General Liability and Umbrella Liability Policies with respect to liability arising out of or connected with work or operations performed by or on behalf of the Contractor under this contract. Coverage for such additional insureds does not extend to liability:

1. Arising from any defective or substandard condition of the roadway which existed at or before the time the Contractor started work, unless such condition has been changed by the work or the scope of the work requires the Contractor to maintain existing roadway facilities and the claim arises from the Contractor's failure to maintain;
2. For claims occurring after the work is completed and accepted unless these claims are directly related to alleged acts or omissions of the Contractor that occurred during the course of the work; or
3. To the extent prohibited by Insurance Code Section 11580.04

- Additional insured coverage shall be provided by a policy provision or by an endorsement providing coverage at least as broad as Additional Insured (Form B) endorsement form CG 2010, as published by the Insurance Services Office (ISO), or other form designated by the Department.

7-1.12B(4)(c) Contractor's Insurance Policy is Primary

- The policy shall stipulate that the insurance afforded the additional insureds applies as primary insurance. Any other insurance or self-insurance maintained by the State is excess only and shall not be called upon to contribute with this insurance.

7-1.12B(5) Automobile Liability Insurance

• The Contractor shall carry automobile liability insurance, including coverage for all owned, hired, and nonowned automobiles. The primary limits of liability shall be not less than $1 000 000 combined single limit each accident for bodily injury and property damage. The umbrella or excess liability coverage required under Section 7-1.12B(4)(b) also applies to automobile liability.

7-1.12B(6) Policy Forms, Endorsements, and Certificates

• The Contractor shall provide its General Liability Insurance under Commercial General Liability policy form No. CG0001 as published by the Insurance Services Office (ISO) or under a policy form at least as broad as policy form No. CG0001.

7-1.12B(7) Deductibles

• The State may expressly allow deductible clauses, which it does not consider excessive, overly broad, or harmful to the interests of the State. Regardless of the allowance of exclusions or deductions by the State, the Contractor is responsible for any deductible amount and shall warrant that the coverage provided to the State is in accordance with Section 7-1.12B, "Insurance."

7-1.12B(8) Enforcement

• The Department may assure the Contractor's compliance with its insurance obligations. Ten days before an insurance policy lapses or is canceled during the contract period, the Contractor shall submit to the Department evidence of renewal or replacement of the policy.

• If the Contractor fails to maintain any required insurance coverage, the Department may maintain this coverage and withhold or charge the expense to the Contractor or terminate the Contractor's control of the work in accordance with Section 8-1.08, "Termination of Control."

• The Contractor is not relieved of its duties and responsibilities to indemnify, defend, and hold harmless the State, its officers, agents, and employees by the Department's acceptance of insurance policies and certificates.

• Minimum insurance coverage amounts do not relieve the Contractor for liability in excess of such coverage, nor do they preclude the State from taking other actions available to it, including the withholding of funds under this contract.

7-1.12B(9) Self-Insurance

• Self-insurance programs and self-insured retentions in insurance policies are subject to separate annual review and approval by the State.

• If the Contractor uses a self-insurance program or self-insured retention, the Contractor shall provide the State with the same protection from liability and defense of suits as would be afforded by first-dollar insurance. Execution of the contract is the Contractor's acknowledgement that the Contractor will be bound by all laws as if the Contractor were an insurer as defined under Insurance Code Section 23 and that the self-insurance program or self-insured retention shall operate as insurance as defined under Insurance Code Section 22.

SECTION 8: PROSECUTION AND PROGRESS

Issue Date: August 17, 2007

The 2nd paragraph of Section 8-1.02, "Assignment," of the Standard Specifications is amended to read:

• If the Contractor assigns the right to receive contract payments, the Department accepts the assignment upon the Engineer's receipt of a notice. Assigned payments remain subject to deductions and withholds described in the contract. The Department may use withheld payments for work completion whether payments are assigned or not.

SECTION 9: MEASUREMENT AND PAYMENT

Issue Date: August 17, 2007

The last sentence of the 1st paragraph of Section 9-1.02, "Scope of Payment," of the Standard Specifications is amended to read:

• Neither the payment of any estimate nor of any retained percentage or withhold relieves the Contractor of any obligation to make good any defective work or material.

The third paragraph of Section 9-1.03, "Work Performed by Contractor," of the Standard Specifications is amended to read:

• The above markups shall constitute full compensation for all delay costs, overhead costs and profit which shall be deemed to include all items of expense not specifically designated as cost or equipment rental in Sections 9-1.03A(1), "Labor," 9-1.03A(2), "Materials," and 9-1.03A(3), "Equipment Rental." The total payment made as provided above shall be deemed to be the actual cost of the work and shall constitute full compensation therefor.

The 6th paragraph of Section 9-1.03C, "Records," of the Standard Specifications is deleted.

Section 9-1.04, "Notice of Potential Claim," of the Standard Specifications is amended to read:

9-1.04 NOTICE OF POTENTIAL CLAIM

• It is the intention of this section that disputes between the parties arising under and by virtue of the contract be brought to the attention of the Engineer at the earliest possible time in order that the matters may be resolved, if possible, or other appropriate action promptly taken.

• Disputes will not be considered unless the Contractor has first complied with specified notice or protest requirements, including Section 4-1.03, "Changes," Section 5-1.116, "Differing Site Conditions," Section 8-1.06, "Time of Completion," Section 8-1.07, "Liquidated Damages," and Section 8-1.10, "Utility and Non-Highway Facilities."

• For disputes arising under and by virtue of the contract, including an act or failure to act by the Engineer, the Contractor shall provide a signed written initial notice of potential claim to the Engineer within 5 days from the date the dispute first arose. The initial notice of potential claim shall provide the nature and circumstances involved in the dispute which shall remain consistent through the dispute. The initial notice of potential claim shall be submitted on Form CEM-6201A furnished by the Department and shall be certified with reference to the California False Claims Act, Government Code Sections 12650-12655. The Contractor shall assign an exclusive identification number for each dispute, determined by chronological sequencing, based on the date of the dispute.

• The exclusive identification number for each dispute shall be used on the following corresponding documents:

1. Initial notice of potential claim
2. Supplemental notice of potential claim
3. Full and final documentation of potential claim
4. Corresponding claim included in the Contractor's written statement of claims

• The Contractor shall provide the Engineer the opportunity to examine the site of work within 5 days from the date of the initial notice of potential claim. The Contractor shall proceed with the performance of contract work unless otherwise specified or directed by the Engineer.

• Throughout the disputed work, the Contractor shall maintain records that provide a clear distinction between the incurred direct costs of disputed work and that of undisputed work. The Contractor shall allow the Engineer access to the Contractor's project records deemed necessary by the Engineer to evaluate the potential claim within 20 days of the date of the Engineer's written request.

• Within 15 days of submitting the initial notice of potential claim, the Contractor shall provide a signed supplemental notice of potential claim to the Engineer that provides the following information:

1. The complete nature and circumstances of the dispute which caused the potential claim
2. The contract provisions that provide the basis of claim
3. The estimated cost of the potential claim, including an itemized breakdown of individual costs and how the estimate was determined
4. A time impact analysis of the project schedule that illustrates the effect on the scheduled completion date due to schedule changes or disruptions where a request for adjustment of contract time is made

• The information provided in items 1 and 2 above shall provide the Contractor's complete reasoning for additional compensation or adjustments.

• The supplemental notice of potential claim shall be submitted on Form CEM-6201B furnished by the Department and shall be certified with reference to the California False Claims Act, Government Code Sections 12650-12655. The Engineer will evaluate the information presented in the supplemental notice of potential claim and provide a written response to the Contractor within 20 days of its receipt. If the estimated cost or effect on the scheduled completion date changes, the Contractor shall update information in items 3 and 4 above as soon as the change is recognized and submit this information to the Engineer.

• Within 30 days of the completion of work related to the potential claim, the Contractor shall provide the full and final documentation of potential claim to the Engineer that provides the following information:

1. A detailed factual narration of events fully describing the nature and circumstances that caused the dispute, including, but not limited to, necessary dates, locations, and items of work affected by the dispute
2. The specific provisions of the contract that support the potential claim and a statement of the reasons these provisions support and provide a basis for entitlement of the potential claim
3. When additional monetary compensation is requested, the exact amount requested calculated in conformance with Section 9-1.03, "Force Account Payment," or Section 8-

1.09, "Right of Way Delays," including an itemized breakdown of individual costs. These costs shall be segregated into the following cost categories:

3.1. Labor – A listing of individuals, classifications, regular hours and overtime hours worked, dates worked, and other pertinent information related to the requested reimbursement of labor costs
3.2. Materials – Invoices, purchase orders, location of materials either stored or incorporated into the work, dates materials were transported to the project or incorporated into the work, and other pertinent information related to the requested reimbursement of material costs
3.3. Equipment – Listing of detailed description (make, model, and serial number), hours of use, dates of use and equipment rates. Equipment rates shall be at the applicable State rental rate as listed in the Department of Transportation publication entitled "Labor Surcharge and Equipment Rental Rates," in effect when the affected work related to the dispute was performed.
3.4. Other categories as specified by the Contractor or the Engineer

4. When an adjustment of contract time is requested the following information shall be provided:

4.1. The specific dates for which contract time is being requested
4.2. The specific reasons for entitlement to a contract time adjustment
4.3. The specific provisions of the contract that provide the basis for the requested contract time adjustment
4.4. A detailed time impact analysis of the project schedule. The time impact analysis shall show the effect of changes or disruptions on the scheduled completion date to demonstrate entitlement to a contract time adjustment.

5. The identification and copies of the Contractor's documents and the substance of oral communications that support the potential claim

• The full and final documentation of the potential claim shall be submitted on Form CEM-6201C furnished by the Department and shall be certified with reference to the California False Claims Act, Government Code Sections 12650-12655.

• Pertinent information, references, arguments, and data to support the potential claim shall be included in the full and final documentation of potential claim. Information submitted subsequent to the full and final documentation submittal will not be considered. Information required in the full and final documentation of potential claim, as listed in items 1 to 5 above, that is not applicable to the dispute may be exempted as determined by the Engineer. No full and final documentation of potential claim will be considered that does not have the same nature and circumstances, and basis of claim as those specified on the initial and supplemental notices of potential claim.

• The Engineer will evaluate the information presented in the full and final documentation of potential claim and provide a written response to the Contractor within 30 days of its receipt unless otherwise specified. The Engineer's receipt of the full and final documentation of potential claim shall be evidenced by postal receipt or the Engineer's written receipt if delivered by hand. If the full and final documentation of potential claim is submitted by the Contractor after acceptance of the work by the Director, the Engineer need not provide a written response.

• Provisions in this section shall not apply to those claims for overhead costs and administrative disputes that occur after issuance of the proposed final estimate. Administrative disputes are disputes of administrative deductions or withholds, contract item quantities, contract item adjustments, interest payments, protests of contract change orders as provided in Section 4-1.03A, "Procedure and Protest," and protests of the Weekly Statement of Working Days as provided in Section 8-1.06, "Time of Completion." Administrative disputes that occur prior to issuance of the proposed final estimate shall follow applicable requirements of this section. Information listed in the supplemental notice and full and final documentation of potential claim that is not applicable to the administrative dispute may be exempted as determined by the Engineer.

• Unless otherwise specified in the special provisions, the Contractor may pursue the administrative claim process pursuant to Section 9-1.07B, "Final Payment and Claims," for any potential claim found by the Engineer to be without merit.

• Failure of the Contractor to conform to specified dispute procedures shall constitute a failure to pursue diligently and exhaust the administrative procedures in the contract, and is deemed as the Contractor's waiver of the potential claim and a waiver of the right to a corresponding claim for the disputed work in the administrative claim process in conformance with Section 9-1.07B, "Final Payment of Claims," and shall operate as a bar to arbitration pursuant to Section 10240.2 of the California Public Contract Code.

Section 9-1.05, "Stop Notices," of the Standard Specifications is amended to read:

9-1.05 STOP NOTICE WITHHOLDS

• The Department may withhold payments to cover claims filed under Civ Code § 3179 et seq.

Section 9, "Measurement and Payment," of the Standard Specifications is amended by adding the following sections:

Section 9-1.07B, "Final Payment and Claims," of the Standard Specifications is amended to read:

9-1.053 PERFORMANCE FAILURE WITHHOLDS

• During each estimate period you fail to comply with a contract part, including submittal of a document as specified, the Department withholds a part of the progress payment. The documents include quality control plans, schedules, traffic control plans, and water pollution control submittals.

• For 1 performance failure, the Department withholds 25 percent of the progress payment but does not withhold more than 10 percent of the total bid.

• For multiple performance failures, the Department withholds 100 percent of the progress payment but does not withhold more than 10 percent of the total bid.

• The Department returns performance-failure withholds in the progress payment following the correction of noncompliance.

9-1.055 PENALTY WITHHOLDS

• Penalties include fines and damages that are proposed, assessed, or levied against you or the Department by a governmental agency or citizen lawsuit. Penalties are also payments made or costs incurred in settling alleged permit violations of Federal, State, or local laws, regulations,

or requirements. The cost incurred may include the amount spent for mitigation or correcting a violation.

- If you or the Department is assessed a penalty, the Department may withhold the penalty amount until the penalty disposition has been resolved. The Department may withhold penalty funds and notify you within 15 days of the withhold. If the penalty amount is less than the amount being withheld from progress payments for retentions, the Department will not withhold the penalty amount.
- If the penalty is resolved for less than the amount withheld, the Department pays interest at a rate of 6 percent per year on the excess withhold. If the penalty is not resolved, the withhold becomes a deduction.
- Instead of the withhold, you may provide a bond payable to the Department of Transportation equal to the highest estimated liability for any disputed penalties proposed.

9-1.057 PROGRESS WITHHOLDS FOR FEDERAL-AID CONTRACTS

- Section 9-1.057, "Progress Withholds for Federal-Aid Contracts," applies to a Federal-aid contract.
- The Department withholds 10 percent of a partial payment for noncompliant progress. Noncompliant progress occurs when:

1. Total days to date exceed 75 percent of the revised contract working days
2. Percent of working days elapsed exceeds the percent of value of work completed by more than 15 percent

- The Engineer determines the percent of working days elapsed by dividing the total days to date by the revised contract working days and converting the quotient to a percentage.
- The Engineer determines the percent of value of work completed by summing payments made to date and the amount due on the current progress estimate, dividing this sum by the current total estimated value of the work, and converting the quotient to a percentage. These amounts are shown on the Progress Payment Voucher.
- When the percent of working days elapsed minus the percent of value of work completed is less than or equal to 15 percent, the Department returns the withhold in the next progress payment.

The 3rd paragraph of Section 9-1.06, "Partial Payments," of the Standard Specifications is amended to read:

- For a non-Federal-aid project, the Department retains 10 percent of the estimated value of the work done and 10 percent of the value of materials estimated to have been furnished and delivered and unused or furnished and stored as part security for the fulfillment of the contract by the Contractor, except that at any time after 20 percent of the work has been completed, if the Engineer finds that satisfactory progress is being made, the Department may reduce the total amount being retained from payment pursuant to the above requirements to 5 percent of the total estimated value of the work and materials and may also reduce the amount retained from any of the remaining partial payments to 5 percent of the estimated value of the work and materials. In addition, on any partial payment made after 95 percent of the work has been completed, the Department may reduce the amount retained from payment pursuant to the requirements of this Section 9-1.06, to such lesser amount as the Department determines is adequate security for the fulfillment of the balance of the work and other requirements of the contract, but in no event is that amount reduced to less than 125 percent of the estimated value of the work yet to be

completed as determined by the Engineer. The reduction is made only upon the request of the Contractor and must be approved in writing by the surety on the performance bond and by the surety on the payment bond. The approval of the surety must be submitted to the Disbursing Officer of the Department; the signature of the person executing the approval for the surety must be properly acknowledged and the power of attorney authorizing the person to give that consent must either accompany the document or be on file with the Department. The retentions specified in this paragraph are those defined in Pub Cont Code § 7107(b).

The 1st sentence of the 4th paragraph of Section 9-1.06, "Partial Payments," of the Standard Specifications is amended to read:

• The Department shall pay monthly to the Contractor, while carrying on the work, the balance not retained, as aforesaid, after deducting therefrom all previous payments and all sums to be deducted or withheld under the provisions of the contract.

The title and 1st and 2nd paragraphs of Section 9-1.065, "Payment of Withheld Funds," of the Standard Specifications are amended to read:

9-1.065 RELEASE OF RETAINED FUNDS

• The Department releases retained funds if you:

1. Request release of the retention (Pub Cont Code § 10263) in writing
2. Deposit securities equivalent to the funds you want released into escrow with the State Treasurer or with a bank acceptable to the Department
3. Are the beneficial owner of and receive interest on the deposited securities substituted for the retained funds

The 2nd sentence Section 9-1.07A, "Payment Prior to Proposed Final Estimate," of the Standard Specifications is amended to read:

• The Department pays the balance due less previous payments, deductions, withholds, and retentions under the provisions of the contract and those further amounts that the Engineer determines to be necessary pending issuance of the proposed final estimate and payment thereon.

Section 9-1.07B, "Final Payment and Claims," of the Standard Specifications is amended to read:

9-1.07B Final Payment and Claims

• After acceptance by the Director, the Engineer makes a proposed final estimate of the total amount payable to the Contractor, including an itemization of the total amount, segregated by contract item quantities, extra work, and other basis for payment, and shows each deduction made or to be made for prior payments and amounts to be deducted, withheld, or retained under the provisions of the contract. Prior estimates and payments are subject to correction in the proposed final estimate. The Contractor must submit written approval of the proposed final estimate or a written statement of claims arising under or by virtue of the contract so that the Engineer receives the written approval or statement of claims no later than close of business of the 30th day after receiving the proposed final estimate. The Contractor's receipt of the proposed final estimate must be evidenced by postal receipt. The Engineer's receipt of the Contractor's

written approval or statement of claims must be evidenced by postal receipt or the Engineer's written receipt if delivered by hand.

- On the Contractor's approval, or if the Contractor files no claim within the specified period of 30 days, the Engineer will issue a final estimate in writing in conformance with the proposed final estimate submitted to the Contractor, and within 30 days thereafter the State will pay the entire sum so found to be due. That final estimate and payment thereon shall be conclusive and binding against both parties to the contract on all questions relating to the amount of work done and the compensation payable therefor, except as otherwise provided in Sections 9-1.03C, "Records," and 9-1.09, "Clerical Errors."
- If the Contractor within the specified period of 30 days files claims, the Engineer will issue a semifinal estimate in conformance with the proposed final estimate submitted to the Contractor and within 30 days thereafter the State will pay the sum found to be due. The semifinal estimate and corresponding payment shall be conclusive and binding against both parties to the contract on each question relating to the amount of work done and the compensation payable therefor, except insofar as affected by the claims filed within the time and in the manner required hereunder and except as otherwise provided in Sections 9-1.03C, "Records," and 9-1.09, "Clerical Errors."
- Except for claims for overhead costs and administrative disputes that occur after issuance of the proposed final estimate, the Contractor shall only provide the following two items of information for each claim:

1. The exclusive identification number that corresponds to the supporting full and final documentation of potential claim
2. The final amount of requested additional compensation

- If the final amount of requested additional compensation is different than the amount of requested compensation included in the full and final documentation of potential claim, the Contractor shall provide in the written statement of claims the reasons for the changed amount, the specific provisions of the contract which support the changed amount, and a statement of the reasons the provisions support and provide a basis for the changed amount. If the Contractor's claim fails to provide an exclusive identification number or if there is a disparity in the provided exclusive identification number, the Engineer will notify the Contractor of the omission or disparity. The Contractor shall have 15 days after receiving notification from the Engineer to correct the omission or disparity. If after the 15 days has elapsed, there is still an omission or disparity of the exclusive identification number assigned to the claim, the Engineer will assign the number. No claim will be considered that has any of the following deficiencies:

1. The claim does not have the same nature, circumstances, and basis as the corresponding full and final documentation of potential claim.
2. The claim does not have a corresponding full and final documentation of potential claim.
3. The claim was not included in the written statement of claims.
4. The Contractor did not comply with applicable notice or protest requirements of Sections 4-1.03, "Changes," 5-1.116, "Differing Site Condition," 8-1.06, "Time of Completion," 8-1.07, "Liquidated Damages," 8-1.10, "Utility and Non-Highway Facilities," and 9-1.04, "Notice of Potential Claim."

- Administrative disputes that occur after issuance of the proposed final estimate shall be included in the Contractor's written statement of claims in sufficient detail to enable the Engineer to ascertain the basis and amounts of those claims.

- The Contractor shall keep full and complete records of the costs and additional time incurred for work for which a claim for additional compensation is made. The Engineer or designated claim investigators or auditors shall have access to those records and any other records as may be required by the Engineer to determine the facts or contentions involved in the claims. Failure to permit access to those records shall be sufficient cause for denying the claims.

- The written statement of claims submitted by the Contractor shall be accompanied by a notarized certificate containing the following language:

Under the penalty of law for perjury or falsification and with specific reference to the California False Claims Act, Government Code Section 12650 et. seq., the undersigned,

_____ .
(name)

_____ *of*
(title)

_____ .
(company)

hereby certifies that the claim for the additional compensation and time, if any, made herein for the work on this contract is a true statement of the actual costs incurred and time sought, and is fully documented and supported under the contract between parties.

Dated _____

/s/ _____

Subscribed and sworn before me this _____ day

of _____ .

_____
(Notary Public)
My Commission
Expires _____

- Failure to submit the notarized certificate will be sufficient cause for denying the claim.
- Any claim for overhead, in addition to being certified as stated above, shall be supported and accompanied by an audit report of an independent Certified Public Accountant. Omission of a supporting audit report of an independent Certified Public Accountant shall result in denial of the claim and shall operate as a bar to arbitration, as to the claim, in conformance with the requirements in Section 10240.2 of the California Public Contract Code. Any claim for overhead shall be subject to audit by the State at its discretion. The costs of performing an audit examination and submitting the report shall be borne by the Contractor. The Department will deduct an offset amount for field and home office overhead paid on all added work from any claim for overhead as appropriate, as determined by the Department. The value of the added work equals the value of the work completed minus the total bid. The home office overhead offset equals 5 percent of the added work. The field office overhead offset equals 5-1/2 percent of the added work. The Certified Public Accountant's audit examination shall be performed in conformance with the requirements of the American Institute of Certified Public Accountants Attestation Standards. The audit examination and report shall depict the Contractor's project and company-wide financial records and shall specify the actual overall average daily rates for both field and home office overhead for the entire duration of the project, and whether the costs have been properly allocated. The rates of field and home office overhead shall exclude unallowable costs as determined in Title 48 of the Federal Acquisition Regulations, Chapter 1, Part 31. The audit examination and report shall determine if the rates of field and home office overhead are:

1. Allowable in conformance with the requirements in Title 48 of the Federal Acquisition Regulations, Chapter 1, Part 31.
2. Adequately supported by reliable documentation.

3. Related solely to the project under examination.

- Costs or expenses incurred by the State in reviewing or auditing claims that are not supported by the Contractor's cost accounting or other records shall be deemed to be damages incurred by the State within the meaning of the California False Claims Act.
- If the Engineer determines that a claim requires additional analysis, the Engineer will schedule a board of review meeting. The Contractor shall meet with the review board or person and make a presentation in support of the claim. Attendance by the Contractor at the board of review meeting shall be mandatory.
- The District Director of the District that administered the contract will make the final determination of any claims which remain in dispute after completion of claim review by the Engineer or board of review meeting.

The final determination of claims will be sent to the Contractor by hand delivery or deposit in the U.S. mail. The Engineer will then make and issue the Engineer's final estimate in writing and within 30 days thereafter the State will pay the entire sum, if any, found due thereon. That final estimate shall be conclusive and binding against both parties to the contract on all questions relating to the amount of work done and the compensation payable therefor, except as otherwise provided in Sections 9-1.03C, "Records," and 9-1.09, "Clerical Errors."

- Failure of the Contractor to conform to the specified dispute procedures shall constitute a failure to pursue diligently and exhaust the administrative procedures in the contract and shall operate as a bar to arbitration in conformance with the requirements in Section 10240.2 of the California Public Contract Code.

SECTION 12: CONSTRUCTION AREA TRAFFIC CONTROL DEVICES

Issue Date: October 6, 2006

The second paragraph of Section 12-1.01, "Description," of the Standard Specifications is amended to read:

- Attention is directed to Part 6 of the California MUTCD. Nothing in this Section 12 is to be construed as to reduce the minimum standards in these manuals.

Section 12-2.01, "Flaggers," of the Standard Specifications is amended to read:

- Flaggers while on duty and assigned to traffic control or to give warning to the public that the highway is under construction and of any dangerous conditions to be encountered as a result thereof, shall perform their duties and shall be provided with the necessary equipment in conformance with Part 6 of the California MUTCD. The equipment shall be furnished and kept clean and in good repair by the Contractor at the Contractor's expense.

The first paragraph of Section 12-3.01, "General," of the Standard Specifications is amended to read:

- In addition to the requirements in Part 6 of the California MUTCD, all devices used by the Contractor in the performance of the work shall conform to the provisions in this Section 12-3.

The fifth paragraph of Section 12-3.01, "General," of the Standard Specifications is amended to read:

• Retroreflective sheeting shall conform to the requirements in ASTM Designation: D 4956 and to the special provisions.

The first paragraph of Section 12-3.06, "Construction Area Signs," of the Standard Specifications is amended to read:

• The term "Construction Area Signs" shall include all temporary signs required for the direction of public traffic through or around the work during construction. Construction area signs are shown in or referred to in Part 6 of the California MUTCD.

The fourth paragraph of Section 12-3.06, "Construction Area Signs," of the Standard Specifications is amended to read:

• All construction area signs shall conform to the dimensions, color and legend requirements of the plans, Part 6 of the California MUTCD and these specifications. All sign panels shall be the product of a commercial sign manufacturer, and shall be as specified in these specifications.

The eighth paragraph of Section 12-3.06, "Construction Area Signs," of the Standard Specifications is amended to read:

• Used signs with the specified sheeting material will be considered satisfactory if they conform to the requirements for visibility and legibility and the colors conform to the requirements in Part 6 of the California MUTCD. A significant difference between day and nighttime retroreflective color will be grounds for rejecting signs.

Section 12-3.06A, "Stationary Mounted Signs," of the Standard Specifications is amended by deleting the third, fourth, fifth, and sixth paragraphs.

SECTION 15: EXISTING HIGHWAY FACILITIES

Issue Date: November 2, 2004

The sixth paragraph of Section 15-2.07, "Payment," of the Standard Specifications is amended to read:

• Full compensation for removing, salvaging, reconstructing, relocating or resetting end caps, return caps, terminal sections, and buried post anchors, for metal beam guard railings and thrie beam barriers, and for connecting reconstructed, relocated or reset railings and barriers to new and existing facilities, including connections to concrete, shall be considered as included in the contract price paid per meter for the type of railing or barrier work involved and no additional compensation will be allowed therefor.

SECTION 19: EARTHWORK

Issue Date: January 5, 2007

The third paragraph of Section 19-1.02, "Preservation of Property," of the Standard Specifications is amended to read:

• In addition to the provisions in Sections 5-1.02, "Plans and Working Drawings," and 5-1.02A, "Excavation Safety Plans," detailed plans of the protective systems for excavations on or affecting railroad property will be reviewed for adequacy of protection provided for railroad facilities, property, and traffic. These plans shall be submitted at least 9 weeks before the Contractor intends to begin excavation requiring the protective systems. Approval by the Engineer of the detailed plans for the protective systems will be contingent upon the plans being satisfactory to the railroad company involved.

The first paragraph of Section 19-3.025C, "Soil Cement Bedding," of the Standard Specifications is amended to read:

• Cementitious material used in soil cement bedding shall conform to the provisions in Section 90-2.01, "Cementitious Materials." Supplementary cementitious material will not be required.

The fourth paragraph of Section 19-3.025C, "Soil Cement Bedding," of the Standard Specifications is amended to read:

• The aggregate, cementitious material, and water shall be proportioned either by mass or by volume. Soil cement bedding shall contain not less than 175 kg of cementitious material per cubic meter. The water content shall be sufficient to produce a fluid, workable mix that will flow and can be pumped without segregation of the aggregate while being placed.

The first paragraph of Section 19-3.062, "Slurry Cement Backfill," of the Standard Specifications is amended to read:

• Slurry cement backfill shall consist of a fluid, workable mixture of aggregate, cementitious material, and water.

The fifth paragraph of Section 19-3.062, "Slurry Cement Backfill," of the Standard Specifications is amended to read:

• Cementitious material shall conform to the provisions in Section 90-2.01, "Cementitious Materials." Supplementary cementitious material will not be required.

The eighth paragraph of Section 19-3.062, "Slurry Cement Backfill," of the Standard Specifications is amended to read:

• The aggregate, cementitious material, and water shall be proportioned either by mass or by volume. Slurry cement backfill shall contain not less than 110 kg of cementitious material per cubic meter. The water content shall be sufficient to produce a fluid, workable mix that will flow and can be pumped without segregation of the aggregate while being placed.

SECTION 20: EROSION CONTROL AND HIGHWAY PLANTING

Issue Date: August 17, 2007

Section 20-2.03, "Soil Amendment," of the Standard Specifications is amended to read:

20-2.03 SOIL AMENDMENT

- Soil amendment shall comply with the requirements in the California Food and Agricultural Code.
- Soil amendment producers shall comply with the following:

1. Be fully permitted to produce compost as specified under the California Integrated Waste Management Board, Local Enforcement Agencies and any other State and Local Agencies that regulate Solid Waste Facilities. If exempt from State permitting requirements, the composting facility must certify that it follows guidelines and procedures for production of compost meeting the environmental health standards of Title 14, California Code of Regulations, Division 7, Chapter 3.1, Article 7.
2. Be a participant in United States Composting Council's Seal of Testing Assurance program.

- Soil amendment shall be composted and may be derived from any single, or mixture of any of the following feedstock materials:

1. Green material consisting of chipped, shredded, or ground vegetation; or clean processed recycled wood products
2. Biosolids
3. Manure
4. Mixed food waste

- Soil amendment feedstock materials shall be composted to reduce weed seeds, pathogens and deleterious materials as specified under Title 14, California Code of Regulations, Division 7, Chapter 3.1, Article 7, Section 17868.3.
- Soil amendment shall not be derived from mixed municipal solid waste and must be reasonably free of visible contaminates. Soil amendment must not contain paint, petroleum products, pesticides or any other chemical residues harmful to animal life or plant growth. Soil amendment must not possess objectionable odors.
- Metal concentrations in soil amendment must not exceed the maximum metal concentrations listed in Title 14, California Code of Regulations, Division 7, Chapter 3.1, Section 17868.2.
- Soil amendment must comply with the following:

Physical/Chemical Requirements

Property	Test Method	Requirement
pH	*TMECC 04.11-A, Elastometric pH 1:5 Slurry Method, pH Units	6.0–8.0
Soluble Salts	TMECC 04.10-A, Electrical Conductivity 1:5 Slurry Method dS/m (mmhos/cm)	0-10.0
Moisture Content	TMECC 03.09-A, Total Solids & Moisture at 70+/- 5 deg C, % Wet Weight Basis	30–60
Organic Matter Content	TMECC 05.07-A, Loss-On-Ignition Organic Matter Method (LOI), % Dry Weight Basis	30–65
Maturity	TMECC 05.05-A, Germination and Vigor Seed Emergence Seedling Vigor % Relative to Positive Control	 80 or Above 80 or Above
Stability	TMECC 05.08-B, Carbon Dioxide Evolution Rate mg CO_2-C/g OM per day	8 or below
Particle Size	TMECC 02.02-B Sample Sieving for Aggregate Size Classification % Dry Weight Basis	95% Passing 5/8 inch 70% Passing 3/8 inch
Pathogen	TMECC 07.01-B, Fecal Coliform Bacteria < 1000 MPN/gram dry wt.	Pass
Pathogen	TMECC 07.01-B, Salmonella < 3 MPN/4 grams dry wt.	Pass
Physical Contaminants	TMECC 02.02-C, Man Made Inert Removal and Classification: Plastic, Glass and Metal, % > 4mm fraction	Combined Total: < 1.0
Physical Contaminants	TMECC 02.02-C, Man Made Inert Removal and Classification: Sharps (Sewing needles, straight pins and hypodermic needles), % > 4mm fraction	None Detected

*TMECC refers to "Test Methods for the Examination of Composting and Compost," published by the United States Department of Agriculture and the United States Compost Council (USCC).

- Prior to application, the Contractor shall provide the Engineer with a copy of the soil amendment producer's Compost Technical Data Sheet and a copy of the compost producers STA certification. The Compost Technical Data Sheet shall include laboratory analytical test results, directions for product use, and a list of product ingredients.
- Prior to application, the Contractor shall provide the Engineer with a Certificate of Compliance in conformance with the provisions in Section 6-1.07, "Certificates of Compliance," of the Standard Specifications.

The last 3 paragraphs of Section 20-2.10, "Seed," of the Standard Specifications are deleted.

Section 20-2.25, "Backflow Preventers," of the Standard Specifications is amended to read:

20-2.25 BACKFLOW PREVENTERS

- Backflow preventers shall be one of the reduced pressure principle devices as specified in these specifications and the special provisions.
- Backflow preventers shall be factory assembled and shall include 2 check valves, one pressure differential relief valve, 2 shut-off valves and 4 test cocks. Backflow preventer and valves shall be the same size as the pipeline in which they are installed, unless otherwise shown on the plans.
- Backflow preventer shut-off valves shall be manufactured from iron or bronze and shall be either resilient wedged gate valves, resilient seated and fully ported ball valves, or resilient

seated butterfly valves. Threaded type shut-off valves shall be provided with a union on one side of each valve. Unions shall be brass or malleable iron.

The last paragraph of Section 20-3.04A, "General," of the Standard Specifications is deleted.

Section 20-4.055, "Pruning," of the Standard Specifications is amended to read:

20-4.055 PRUNING

• Pruning of plants shall be consistent with American National Standards Institute (ANSI), "Tree, Shrub and Other Woody Plant Maintenance Standard Practices," ANSI 300 (Part 1)-2001 and "Best Management Practices Tree Pruning," 2002 (ISBN 1-881956318), published by the International Society of Arboriculture, P.O. Boc 3129, Champaign, IL 61826.

Section 20-5.03J, "Check and Test Backflow Preventers," of the Standard Specifications is amended to read:

20-5.03J Check and Test Backflow Preventers

• Backflow preventers shall be checked and tested for proper operation by a certified Backflow Preventer Tester. The tester shall hold a valid certification as a Backflow Preventer Tester from the local governing authority in which the device to be tested is located. The local governing authority shall be the county, city or water purveyor having the governing authority over testing of backflow preventers involved. If the local governing authority does not have a certification program for Backflow Preventer Testers, the tester shall have a certificate from one of the following:

A. The American Water Works Association.
B. A county which has a certification program for Backflow Preventer Testers.

• Tests for proper operation shall conform to the requirements of the governing authority.
• The Engineer shall be notified at least 5 days prior to testing backflow preventers.
• One copy of the test results for each backflow preventer tested shall be furnished to the Engineer.
• Backflow preventers, installed by the Contractor, failing required tests shall be repaired at the Contractor's expense.

SECTION 25: AGGREGATE SUBBASES

Issue Date: February 16, 2007

The first paragraph of Section 25-1.02A, "Class 1, Class 2, and Class 3 Aggregate Subbases," of the Standard Specifications is amended to read:

• Aggregate must be clean and free from organic matter and other deleterious substances. Aggregate must consist of any combination of:

1. Broken stone
2. Crushed gravel
3. Natural rough surfaced gravel

4. Sand
5. Up to 100 percent of any combination of processed:

    5.1. Asphalt concrete
    5.2. Portland cement concrete
    5.3. Lean concrete base
    5.4. Cement treated base

The first paragraph of Section 25-1.02B, "Class 4 Aggregate Subbase," of the Standard Specifications is amended to read:

• Aggregate must be clean and free from organic matter and other deleterious substances. Aggregate must consist of any combination of:

1. Broken stone
2. Crushed gravel
3. Natural rough surfaced gravel
4. Sand
5. Up to 100 percent of any combination of processed:

    5.1. Asphalt concrete
    5.2. Portland cement concrete
    5.3. Lean concrete base
    5.4. Cement treated base

SECTION 26: AGGREGATE BASE

Issue Date: February 16, 2007

The first paragraph of Section 26-1.02A, "Class 2 Aggregate Base," of the Standard Specifications is amended to read:

• Aggregate must be clean and free from organic matter and other deleterious substances. Aggregate must consist of any combination of:

1. Broken stone
2. Crushed gravel
3. Natural rough surfaced gravel
4. Sand
5. Up to 100 percent of any combination of processed:

    5.1. Asphalt concrete
    5.2. Portland cement concrete
    5.3. Lean concrete base
    5.4. Cement treated base

The first paragraph of Section 26-1.02B, "Class 3 Aggregate Base," of the Standard Specifications is amended to read:

• Aggregate must be clean and free from organic matter and other deleterious substances. Aggregate must consist of any combination of:

1. Broken stone
2. Crushed gravel
3. Natural rough surfaced gravel
4. Sand
5. Up to 100 percent of any combination of processed:

    5.1. Asphalt concrete
    5.2. Portland cement concrete
    5.3. Lean concrete base
    5.4. Cement treated base

SECTION 27: CEMENT TREATED BASES

Issue Date: January 5, 2007

The first paragraph of Section 27-1.02, "Materials," of the Standard Specifications is amended to read:

• Cement shall be Type II portland cement conforming to the provisions in Section 90-2.01A, "Cement."

The third paragraph of Section 27-1.02, "Materials," of the Standard Specifications is amended to read:

• Aggregate for use in Class A cement treated base shall be of such quality that when mixed with cement in an amount not to exceed 5 percent by mass of the dry aggregate and compacted at optimum moisture content, the compressive strength of a sample of the compacted mixture shall not be less than 5.2 MPa at 7 days, when tested by California Test 312.

The fourth paragraph of Section 27-1.02, "Materials," of the Standard Specifications is amended to read:

• Aggregate for use in Class B cement treated base shall have a Resistance (R-value) of not less than 60 before mixing with cement and a Resistance (R-value) of not less than 80 after mixing with cement in an amount not to exceed 2.5 percent by mass of the dry aggregate.

SECTION 28: LEAN CONCRETE BASE

Issue Date: January 5, 2007

The first paragraph of Section 28-1.02, "Materials," of the Standard Specifications is amended to read:

• Cement shall be Type II portland cement conforming to the provisions in Section 90-2.01A, "Cement."

The sixth paragraph of Section 28-1.02, "Materials," of the Standard Specifications is amended to read:

• Aggregate shall be of such quality that, when mixed with cement in an amount not to exceed 180 kg per cubic meter, and tested in conformance with the requirements in California Test 548, the compressive strength of a sample will be not less than 5.0 MPa at 7 days.

SECTION 29: TREATED PERMEABLE BASES

Issue Date: January 5, 2007

The fourth paragraph of Section 29-1.02A, "Asphalt Treated Permeable Base," of the Standard Specifications is amended to read:

• The type and grade of asphalt binder to be mixed with aggregate will be specified in the special provisions.

The second paragraph of Section 29-1.02B, "Cement Treated Permeable Base," of the Standard Specifications is amended to read:

• Cement shall be Type II portland cement conforming to the provisions in Section 90-2.01A, "Cement."

The second paragraph of Section 29-1.04B, "Cement Treated Permeable Base," of the Standard Specifications is amended to read:

• Cement treated permeable base shall contain not less than 170 kg of cement per cubic meter.

SECTION 37: BITUMINOUS SEALS

Issue Date: August 17, 2007

The fourth through sixth paragraphs in Section 37-1.03, "Maintaining Traffic," of the Standard Specifications are amended to read:

• On 2-lane two-way roadways, W8-7 "LOOSE GRAVEL" signs and W13-1 (35) speed advisory signs shall be furnished and placed adjacent to both sides of the traveled way where screenings are being spread on a traffic lane. The first W8-7 sign in each direction shall be placed where traffic first encounters loose screenings, regardless of which lane the screenings are being spread on. The W13-1 (35) signs need not be placed in those areas with posted speed limits of less than 40 MPH. The signs shall be placed at maximum 600-m intervals along each side of the traveled way and at public roads or streets entering the seal coat area as directed by the Engineer.

• On multilane roadways (freeways, expressways and multilane conventional highways) where screenings are being spread on a traffic lane, W8-7 "LOOSE GRAVEL" signs and W13-1 (35) speed advisory signs shall be furnished and placed adjacent to the outside edge of the traveled way nearest to the lane being worked on. The first W8-7 sign shall be placed where the screenings begin with respect to the direction of travel on that lane. The W13-1 (35) signs need

not be placed in those areas with posted speed limits of less than 40 MPH. The signs shall be placed at maximum 600-m intervals along the edge of traveled way and at on-ramps, public roads or streets entering the seal coat area as directed by the Engineer.

• The W8-7 and W13-1 signs shall be maintained in place at each location until final brooming of the seal coat surface at that location is completed. The W8-7 and W13-1 signs shall conform to the provisions for construction area signs in Section 12, "Construction Area Traffic Control Devices." The signs may be set on temporary portable supports with the W13-1 below the W8-7 or on barricades with the W13-1 sign alternating with the W8-7 sign.

The second paragraph in Section 37-1.09, "Payment," of the Standard Specifications is amended to read:

• The above prices and payments shall include full compensation for furnishing all labor, materials, tools, equipment and incidentals, and for doing all the work involved in applying seal coat, complete in place, including furnishing, placing, maintaining, and removing W8-7 and W13-1 signs, when required, and temporary supports or barricades for the signs, as shown on the plans, and as specified in these specifications and the special provisions, and as directed by the Engineer.

SECTION 39: ASPHALT CONCRETE

Issue Date: November 18, 2005

The fifth paragraph of Section 39-2.01, "Asphalts," of the Standard Specifications is amended to read:

• Paving asphalt to be used as a binder for pavement reinforcing fabric shall be a steam-refined paving asphalt conforming to the provisions in Section 92, "Asphalts," and shall be Grade PG 70-10.

SECTION 40: PORTLAND CEMENT CONCRETE PAVEMENT

Issue Date: January 5, 2007

Section 40-1.015, "Cement Content," is deleted.

Section 40-1.05, "Proportioning," of the Standard Specifications is amended to read:

• Aggregate and cementitious material proportioning shall conform to the provisions in Section 90-5, "Proportioning."

The first paragraph in Section 40-1.105, "Exit Ramp Termini," of the Standard Specifications is amended to read:

• Concrete pavement shall be constructed at the ends of exit ramps when required by the plans or the special provisions. Texturing for exit ramp termini shall be by means of heavy brooming in a direction normal to ramp centerline. The hardened surface shall have a coefficient of friction not less than 0.35 as determined by California Test 342. Minimum cementitious material content of concrete in pavement for exit ramp termini shall be 350 kg/m^3.

The fourth paragraph of Section 40-1.08, "Joints," of the Standard Specifications is amended to read:

• Straight tie bars shall be deformed reinforcing steel bars conforming to the requirements in ASTM Designation: A 615/A 615M, Grade 280 or 420; ASTM Designation: A 996/A 996M, Grade 350 or 420; or ASTM Designation: A 706/A 706M.

The first paragraph in Section 40-1.14, "Payment," of the Standard Specifications is amended to read:

• The contract price paid per cubic meter for concrete pavement shall include full compensation for furnishing all labor, materials (including cementitious material in the amount specified), tools, equipment, and incidentals, and for doing all the work involved in constructing the portland cement concrete pavement, complete in place, as shown on the plans, and as specified in these specifications and the special provisions, and as directed by the Engineer.

SECTION 41: PAVEMENT SUBSEALING AND JACKING

Issue Date: January 5, 2007

The second paragraph of Section 41-1.02, "Materials," of the Standard Specifications is amended to read:

• Cement for grout shall be Type II portland cement conforming to the provisions in Section 90-2.01A, "Cement."

The third paragraph of Section 41-1.02, "Materials," of the Standard Specifications is amended to read:

• Fly ash shall conform to the requirements in AASHTO Designation: M 295 for either Class C or for Class F. The brand of fly ash used in the work shall conform to the provisions for approval of admixture brands in Section 90-4.03, "Admixture Approval."

The fifth paragraph of Section 41-1.02, "Materials," of the Standard Specifications is amended to read:

• Chemical admixtures and calcium chloride may be used. Chemical admixtures in the grout mix shall conform to the provisions in Section 90-4, "Admixtures." Calcium chloride shall conform to ASTM Designation: D 98.

SECTION 42: GROOVE AND GRIND PAVEMENT

Issue Date: December 31, 2001

The last sentence of the first subparagraph of the third paragraph in Section 42-2.02, "Construction," of the Standard Specifications is amended to read:

• After grinding has been completed, the pavement shall conform to the straightedge and profile requirements specified in Section 40-1.10, "Final Finishing."

SECTION 49: PILING

Issue Date: January 5, 2007

The first paragraph in Section 49-1.03, "Determination of Length," of the Standard Specifications is amended to read:

• Foundation piles of any material shall be of such length as is required to obtain the specified penetration, and to extend into the cap or footing block as shown on the plans, or specified in the special provisions.

The fourth paragraph in Section 49-1.03, "Determination of Length," of the Standard Specifications is amended to read:

• Modification to the specified installation methods and specified pile tip elevation will not be considered at locations where tension or lateral load demands control design pile tip elevations or when the plans state that specified pile tip elevation shall not be revised.

The sixth and seventh paragraphs in Section 49-1.03, "Determination of Length," of the Standard Specifications are amended to read:

• Indicator compression pile load testing shall conform to the requirements in ASTM Designation: D 1143-81. The pile shall sustain the first compression test load applied which is equal to the nominal resistance in compression, as shown on the plans, with no more than 13 mm total vertical movement at the top of the pile measured relative to the top of the pile prior to the start of compression load testing.

• Indicator tension pile load testing shall conform to the requirements in ASTM Designation: D 3689-90. The loading apparatus described as "Load Applied to Pile by Hydraulic Jack(s) Acting at One End of Test Beam(s) Anchored to the Pile" shall not be used. The pile shall sustain the first tension test load applied which is equal to the nominal resistance in tension, as shown on the plans, with no more than 13 mm total vertical movement at the top of the pile measured relative to the top of the pile prior to the start of tension load testing.

The ninth paragraph in Section 49-1.03, "Determination of Length," of the Standard Specifications is amended to read:

• For driven piling, the Contractor shall furnish piling of sufficient length to obtain the specified tip elevation shown on the plans or specified in the special provisions. For cast-in-drilled-hole concrete piling, the Contractor shall construct piling of such length to develop the nominal resistance in compression and to obtain the specified tip elevation shown on the plans or specified in the special provisions.

The tenth paragraph in Section 49-1.03, "Determination of Length," of the Standard Specifications is deleted.

The fourth paragraph in Section 49-1.04, "Load Test Piles," of the Standard Specifications is amended to read:

• Load test piles and anchor piles which are not to be incorporated in the completed structure shall be removed in conformance with the provisions in Section 15-4.02, "Removal Methods," and the remaining holes shall be backfilled with earth or other suitable material approved by the Engineer.

The fifth paragraph in Section 49-1.04, "Load Test Piles," of the Standard Specifications is amended to read:

• Load test anchorages in piles used as anchor piles shall conform to the following requirements:

A. High strength threaded steel rods shall conform to the provisions for bars in Section 50-1.05, "Prestressing Steel," except Type II bars shall be used.
B. High strength steel plates shall conform to the requirements in ASTM Designation: A 709/A 709M, Grade 345.
C. Anchor nuts shall conform to the provisions in the second paragraph in Section 50-1.06, "Anchorages and Distribution."

The sixth paragraph in Section 49-1.04, "Load Test Piles," of the Standard Specifications is amended to read:

• The Contractor may use additional cementitious material in the concrete for the load test and anchor piles.

The first paragraph in Section 49-1.05, "Driving Equipment," of the Standard Specifications is amended to read:

• Driven piles shall be installed with impact hammers that are approved in writing by the Engineer. Impact hammers shall be steam, hydraulic, air or diesel hammers. Impact hammers shall develop sufficient energy to drive the piles at a penetration rate of not less than 3 mm per blow at the specified nominal resistance.

The seventh paragraph in Section 49-1.05, "Driving Equipment," of the Standard Specifications is amended to read:

• When necessary to obtain the specified penetration and when authorized by the Engineer, the Contractor may supply and operate one or more water jets and pumps, or furnish the necessary drilling apparatus and drill holes not greater than the least dimension of the pile to the proper depth and drive the piles therein. Jets shall not be used at locations where the stability of embankments or other improvements would be endangered. In addition, for steel piles, steel shells, or steel casings, when necessary to obtain the specified penetration or to prevent damage to the pile during installation, the Contractor shall provide special driving tips or heavier pile sections or take other measures as approved by the Engineer.

• The use of followers or underwater hammers for driving piles will be permitted if authorized in writing by the Engineer. When a follower or underwater hammer is used, its

efficiency shall be verified by furnishing the first pile in each bent or footing sufficiently long and driving the pile without the use of a follower or underwater hammer.

The second paragraph in Section 49-1.07, "Driving," of the Standard Specifications is amended to read:

• Timber piles shall be fresh-headed and square and when permitted by the Engineer, the heads of the piles may be protected by means of heavy steel or wrought iron rings. During driving operations timber piling shall be restrained from lateral movement at intervals not to exceed 6 m over the length between the driving head and the ground surface. During driving operations, the timber pile shall be kept moving by continuous operation of the hammer. When the blow count exceeds either 2 times the blow count required in 300 mm, or 3 times the blow count required in 75 mm for the nominal resistance as shown on the plans, computed in conformance with the provisions in Section 49-1.08, "Pile Driving Acceptance Criteria," additional aids shall be used to obtain the specified penetration. These aids may include the use of water jets or drilling, where permitted, or the use of a larger hammer employing a heavy ram striking with a low velocity.

Section 49-1.08, "Bearing Value and Penetration," of the Standard Specifications is amended to read:

49-1.08 PILE DRIVING ACCEPTANCE CRITERIA

• Except for piles to be load tested, driven piles shall be driven to a value of not less than the nominal resistance shown on the plans unless otherwise specified in the special provisions or permitted in writing by the Engineer. In addition, when a pile tip elevation is specified, driven piles shall penetrate at least to the specified tip elevation, unless otherwise permitted in writing by the Engineer. Piles to be load tested shall be driven to the specified tip elevation.

• When the pile nominal resistance is omitted from the plans or the special provisions, timber piles shall be driven to a nominal resistance of 800 kN, and steel and concrete piles shall be driven to a nominal resistance of 1250 kN.

• The nominal resistance for driven piles shall be determined from the following formula in which "R_u" is the nominal resistance in kilonewtons, "E_r" is the manufacturer's rating for joules of energy developed by the hammer at the observed field drop height, and "N" is the number of hammer blows in the last 300 millimeters. (maximum value to be used for N is 100):

$$R_u = (7 * (E_r)^{1/2} * \log_{10}(0.83 * N)) - 550$$

The first paragraph in Section 49-2.03, "Requirements," of the Standard Specifications is amended to read:

• When preservative treatment of timber piles is required by the plans or specified in the special provisions, the treatment shall conform to the provisions in Section 58, "Preservative Treatment of Lumber, Timber and Piling," and the applicable AWPA Use Category.

The first paragraph in Section 49-2.04, "Treatment of Pile Heads," of the Standard Specifications is amended to read:

A. An application of wood preservative conforming to the provisions in Section 58-1.04, "Wood Preservative for Manual Treatment," shall first be applied to the head of the pile

and a protective cap shall then be built up by applying alternate layers of loosely woven fabric and hot asphalt or tar similar to membrane waterproofing, using 3 layers of asphalt or tar and 2 layers of fabric. The fabric shall measure at least 150 mm more in each direction than the diameter of the pile and shall be turned down over the pile and the edges secured by binding with 2 turns of No. 10 galvanized wire. The fabric shall be wired in advance of the application of the final layer of asphalt or tar, which shall extend down over the wiring.

B. The sawed surface shall be covered with 3 applications of a hot mixture of 60 percent creosote and 40 percent roofing pitch, or thoroughly brushcoated with 3 applications of hot creosote and covered with hot roofing pitch. A covering of 3.50-mm nominal thickness galvanized steel sheet shall be placed over the coating and bent down over the sides of each pile to shed water.

Section 49-3.01, "Description," of the Standard Specifications is amended by deleting the fifth paragraph.

The sixth and seventh paragraphs in Section 49-3.01, "Description," of the Standard Specifications are amended to read:

• Except for precast prestressed concrete piles in a corrosive environment, lifting anchors used in precast prestressed concrete piles shall be removed, and the holes filled in conformance with the provisions in Section 51-1.18A, "Ordinary Surface Finish."

• Lifting anchors used in precast prestressed concrete piles in a corrosive environment shall be removed to a depth of at least 25 mm below the surface of the concrete, and the resulting hole shall be filled with epoxy adhesive before the piles are delivered to the job site. The epoxy adhesive shall conform to the provisions in Sections 95-1, "General," and 95-2.01, "Binder (Adhesive), Epoxy Resin Base (State Specification 8040-03)."

The first and second paragraphs in Section 49-4.01, "Description," of the Standard Specifications are amended to read:

• Cast-in-place concrete piles shall consist of one of the following:

A. Steel shells driven permanently to the required nominal resistance and penetration and filled with concrete.
B. Steel casings installed permanently to the required penetration and filled with concrete.
C. Drilled holes filled with concrete.
D. Rock sockets filled with concrete.

• The drilling of holes shall conform to the provisions in these specifications. Concrete filling for cast-in-place concrete piles is designated by compressive strength and shall have a minimum 28-day compressive strength of 25 MPa. At the option of the Contractor, the combined aggregate grading for the concrete shall be either the 25-mm maximum grading, the 12.5-mm maximum grading, or the 9.5-mm maximum grading. Concrete shall conform to the provisions in Section 90, "Portland Cement Concrete," and Section 51, "Concrete Structures." Reinforcement shall conform to the provisions in Section 52, "Reinforcement."

The fourth paragraph in Section 49-4.03, "Drilled Holes," of the Standard Specifications is amended to read:

• After placing reinforcement and prior to placing concrete in the drilled hole, if caving occurs or deteriorated foundation material accumulates on the bottom of the hole, the bottom of the drilled hole shall be cleaned. The Contractor shall verify that the bottom of the drilled hole is clean.

The first and second paragraphs in Section 49-4.04, "Steel Shells," of the Standard Specifications are amended to read:

• Steel shells shall be sufficiently watertight to exclude water during the placing of concrete. The shells may be cylindrical or tapered, step-tapered, or a combination of either, with cylindrical sections.

The first paragraph in Section 49-4.05, "Inspection," of the Standard Specifications is amended to read:

• After being driven and prior to placing reinforcement and concrete therein, the steel shells shall be examined for collapse or reduced diameter at any point. Any shell which is improperly driven or broken or shows partial collapse to such an extent as to materially decrease its nominal resistance will be rejected. Rejected shells shall be removed and replaced, or a new shell shall be driven adjacent to the rejected shell. Rejected shells which cannot be removed shall be filled with concrete by the Contractor at the Contractor's expense. When a new shell is driven to replace a rejected shell, the Contractor, at the Contractor's expense, shall enlarge the footing as determined necessary by the Engineer.

The third paragraph in Section 49-5.01, "Description," of the Standard Specifications is amended to read:

• Steel pipe piles shall conform to the following requirements:

1. Steel pipe piles less than 360 mm in diameter shall conform to the requirements in ASTM Designation: A 252, Grade 2 or 3.
2. Steel pipe piles 360 mm and greater in diameter shall conform to the requirements in ASTM Designation: A 252, Grade 3.
3. Steel pipe piles shall be of the nominal diameter and nominal wall thickness shown on the plans or specified in the special provisions.
4. The carbon equivalency (CE) of steel for steel pipe piles, as defined in AWS D 1.1, Section XI5.1, shall not exceed 0.45.
5. The sulfur content of steel for steel pipe piles shall not exceed 0.05-percent.
6. Seams in steel pipe piles shall be complete penetration welds.

The first paragraph in Section 49-6.01, "Measurement," of the Standard Specifications is amended to read:

• The length of timber, steel, and precast prestressed concrete piles, and of cast-in-place concrete piles consisting of driven shells filled with concrete, shall be the greater of the following:

A. The total length in place in the completed work, measured along the longest side, from the tip of the pile to the plane of pile cut-off.
B. The length measured along the longest side, from the tip elevation shown on the plans or the tip elevation ordered by the Engineer, to the plane of pile cut-off.

The third paragraph in Section 49-6.02, "Payment," of the Standard Specifications is amended to read:

• The contract price paid per meter for cast-in-drilled-hole concrete piling shall include full compensation for furnishing all labor, materials, tools, equipment, and incidentals, and for doing all work involved in drilling holes, disposing of material resulting from drilling holes, temporarily casing holes and removing water when necessary, furnishing and placing concrete and reinforcement, and constructing reinforced concrete extensions, complete in place, to the required penetration, as shown on the plans, as specified in these specifications and in the special provisions, and as directed by the Engineer.

The seventh paragraph in Section 49-6.02, "Payment," of the Standard Specifications is amended to read:

• The contract unit price paid for drive pile shall include full compensation for furnishing all labor, materials, tools, equipment, and incidentals, and for doing all the work involved in driving timber, concrete and steel piles, driving steel shells for cast-in-place concrete piles, placing filling materials for cast-in-place concrete piles and cutting off piles, all complete in place to the required nominal resistance and penetration as shown on the plans and as specified in these specifications and the special provisions, and as directed by the Engineer.

The ninth paragraph in Section 49-6.02, "Payment," of the Standard Specifications is amended to read:

• Full compensation for all jetting, drilling, providing special driving tips or heavier sections for steel piles or shells, or other work necessary to obtain the specified penetration and nominal resistance of the piles, for predrilling holes through embankment and filling the space remaining around the pile with sand or pea gravel, for disposing of material resulting from jetting, drilling or predrilling holes, and for all excavation and backfill involved in constructing concrete extensions as shown on the plans, and as specified in these specifications and the special provisions, and as directed by the Engineer shall be considered as included in the contract unit price paid for drive pile or in the contract price paid per meter for cast-in-drilled-hole concrete piling, and no additional compensation will be allowed therefor.

Section 49-6.02, "Payment," of the Standard Specifications is amended by adding the following paragraphs:

• Full compensation for furnishing and placing additional testing reinforcement, for load test anchorages, and for cutting off test piles, shall be considered as included in the contract price paid for piling of the type or class shown in the Engineer's Estimate, and no additional compensation will be allowed.

• No additional compensation or extension of time will be made for additional foundation investigation, installation and testing of indicator piling, cutting off piling and restoring the foundation investigation and indicator pile sites, and review of request by the Engineer.

SECTION 50: PRESTRESSING CONCRETE

Issue Date: January 5, 2007

Section 50-1.02, "Drawings," of the Standard Specifications is amended by adding the following paragraph after the second paragraph:

• Each working drawing submittal shall consist of plans for a single bridge or portion thereof. For multi-frame bridges, each frame shall require a separate working drawing submittal.

The eighth paragraph of Section 50-1.02, "Drawings," of the Standard Specifications is deleted.

Section 50-1.05, "Prestressing Steel," of the Standard Specifications is amended to read:

• Prestressing steel shall be high-tensile wire conforming to the requirements in ASTM Designation: A 421, including Supplement I; high-tensile seven-wire strand conforming to the requirements in ASTM Designation: A 416; or uncoated high-strength steel bars conforming to the requirements in ASTM Designation: A 722, including all supplementary requirements. The maximum mass requirement of ASTM Designation: A 722 will not apply.

• In addition to the requirements of ASTM Designation: A 722, for deformed bars, the reduction of area shall be determined from a bar from which the deformations have been removed. The bar shall be machined no more than necessary to remove the deformations over a length of 300 mm, and reduction will be based on the area of the machined portion.

• In addition to the requirements specified herein, epoxy-coated seven-wire prestressing steel strand shall be grit impregnated and filled in conformance with the requirements in ASTM Designation: A 882/A 882M, including Supplement I, and the following:

A. The coating material shall be on the Department's list of approved coating materials for epoxy-coated strand, available from the Transportation Laboratory.
B. The film thickness of the coating after curing shall be 381 μm to 1143 μm.
C. Prior to coating the strand, the Contractor shall furnish to the Transportation Laboratory a representative 230-g sample from each batch of epoxy coating material to be used. Each sample shall be packaged in an airtight container identified with the manufacturer's name and batch number.
D. Prior to use of the epoxy-coated strand in the work, written certifications referenced in ASTM Designation: A 882/A 882M, including a representative load-elongation curve for each size and grade of strand to be used and a copy of the quality control tests performed by the manufacturer, shall be furnished to the Engineer.
E. In addition to the requirements in Section 50-1.10, "Samples for Testing," four 1.5-m long samples of coated strand and one 1.5-m long sample of uncoated strand of each size and reel shall be furnished to the Engineer for testing. These samples, as selected by the Engineer, shall be representative of the material to be used in the work.
F. Epoxy-coated strand shall be cut using an abrasive saw.

G. All visible damage to coatings caused by shipping and handling, or during installation, including cut ends, shall be repaired in conformance with the requirements in ASTM Designation: A 882/A 882M. The patching material shall be furnished by the manufacturer of the epoxy powder and shall be applied in conformance with the manufacturer's written recommendations. The patching material shall be compatible with the original epoxy coating material and shall be inert in concrete.

- All bars in any individual member shall be of the same grade, unless otherwise permitted by the Engineer.
- When bars are to be extended by the use of couplers, the assembled units shall have a tensile strength of not less than the manufacturer's minimum guaranteed ultimate tensile strength of the bars. Failure of any one sample to meet this requirement will be cause for rejection of the heat of bars and lot of couplers. The location of couplers in the member shall be subject to approval by the Engineer.
- Wires shall be straightened if necessary to produce equal stress in all wires or wire groups or parallel lay cables that are to be stressed simultaneously or when necessary to ensure proper positioning in the ducts.
- Where wires are to be button-headed, the buttons shall be cold formed symmetrically about the axes of the wires. The buttons shall develop the minimum guaranteed ultimate tensile strength of the wire. No cold forming process shall be used that causes indentations in the wire. Buttonheads shall not contain wide open splits, more than 2 splits per head, or splits not parallel with the axis of the wire.
- Prestressing steel shall be protected against physical damage and rust or other results of corrosion at all times from manufacture to grouting or encasing in concrete. Prestressing steel that has sustained physical damage at any time shall be rejected. The development of visible rust or other results of corrosion shall be cause for rejection, when ordered by the Engineer.
- Epoxy-coated prestressing steel strand shall be covered with an opaque polyethylene sheeting or other suitable protective material to protect the strand from exposure to sunlight, salt spray, and weather. For stacked coils, the protective covering shall be draped around the perimeter of the stack. The covering shall be adequately secured; however, it should allow for air circulation around the strand to prevent condensation under the covering. Epoxy-coated strand shall not be stored within 300 m of ocean or tidal water for more than 2 months.
- Prestressing steel shall be packaged in containers or shipping forms for the protection of the steel against physical damage and corrosion during shipping and storage. Except for epoxy-coated strand, a corrosion inhibitor which prevents rust or other results of corrosion, shall be placed in the package or form, or shall be incorporated in a corrosion inhibitor carrier type packaging material, or when permitted by the Engineer, may be applied directly to the steel. The corrosion inhibitor shall have no deleterious effect on the steel or concrete or bond strength of steel to concrete. Packaging or forms damaged from any cause shall be immediately replaced or restored to original condition.
- The shipping package or form shall be clearly marked with a statement that the package contains high-strength prestressing steel, and the type of corrosion inhibitor used, including the date packaged.
- Prestressing steel for post-tensioning which is installed in members prior to placing and curing of the concrete, and which is not epoxy-coated, shall be continuously protected against rust or other results of corrosion, until grouted, by means of a corrosion inhibitor placed in the ducts or applied to the steel in the duct. The corrosion inhibitor shall conform to the provisions specified herein.

- When steam curing is used, prestressing steel for post-tensioning shall not be installed until the steam curing is completed.
- Water used for flushing ducts shall contain either quick lime (calcium oxide) or slaked lime (calcium hydroxide) in the amount of 0.01-kg/L. Compressed air used to blow out ducts shall be oil free.
- When prestressing steel for post-tensioning is installed in the ducts after completion of concrete curing, and if stressing and grouting are completed within 10 days after the installation of the prestressing steel, rust which may form during those 10 days will not be cause for rejection of the steel. Prestressing steel installed, tensioned, and grouted in this manner, all within 10 days, will not require the use of a corrosion inhibitor in the duct following installation of the prestressing steel. Prestressing steel installed as above but not grouted within 10 days shall be subject to all the requirements in this section pertaining to corrosion protection and rejection because of rust. The requirements in this section pertaining to tensioning and grouting within 10 days shall not apply to epoxy-coated prestressing steel strand.
- Any time prestressing steel for pretensioning is placed in the stressing bed and is exposed to the elements for more than 36 hours prior to encasement in concrete, adequate measures shall be taken by the Contractor, as approved by the Engineer, to protect the steel from contamination or corrosion.
- After final fabrication of the seven-wire prestressing steel strand, no electric welding of any form shall be performed on the prestressing steel. Whenever electric welding is performed on or near members containing prestressing steel, the welding ground shall be attached directly to the steel being welded.
- Pretensioned prestressing steel shall be cut off flush with the end of the member. For epoxy-coated prestressing steel, only abrasive saws shall be used to cut the steel. The exposed ends of the prestressing steel and a 25-mm strip of adjoining concrete shall be cleaned and painted. Cleaning shall be by wire brushing or abrasive blast cleaning to remove all dirt and residue on the metal or concrete surfaces. Immediately after cleaning, the surfaces shall be covered with one application of unthinned zinc-rich primer (organic vehicle type) conforming to the provisions in Section 91, "Paint," except that 2 applications shall be applied to surfaces which will not be covered by concrete or mortar. Aerosol cans shall not be used. The paint shall be thoroughly mixed at the time of application and shall be worked into any voids in the prestressing tendons.

The seventh paragraph in Section 50-1.07, "Ducts," of the Standard Specifications is amended to read:

- All ducts with a total length of 120 m or more shall be vented. Vents shall be placed at intervals of not more than 120 m and shall be located within 2 m of every high point in the duct profile. Vents shall be 12 mm minimum diameter standard pipe or suitable plastic pipe. Connections to ducts shall be made with metallic or plastic structural fasteners. Plastic components, if selected, shall not react with the concrete or enhance corrosion of the prestressing steel and shall be free of water soluble chlorides. The vents shall be mortar tight, taped as necessary, and shall provide means for injection of grout through the vents and for sealing the vents. Ends of vents shall be removed 25 mm below the roadway surface after grouting has been completed.

The sixth paragraph of Section 50-1.08, "Prestressing," of the Standard Specifications is amended to read:

• The following formula and friction coefficients shall be used in calculating friction losses in tendons:

$To = Txe^{(\mu\alpha + KL)}$

Where:

To = steel stress at jacking end
Tx = steel stress at any point x
e = base of Naperian logarithms
μ = friction curvature coefficient
α = total angular change of prestressing steel profile in radians from jacking end to point x
K = friction wobble coefficient (=0.00066/m)
L = length of prestressing steel from jacking end to point x

Type of Steel Tendon	Length of Tendon L(m)	Type of Duct	μ
Wire or Strand	0 to less than 183	Rigid or semi-rigid galvanized sheet metal	0.15
	183 to less than 275		0.20
	275 to less than 366		0.25
	Greater than or equal to 366		0.25*
Wire or Strand	All	Plastic	0.23
	All	Rigid Steel Pipes	0.25*
High Strength Bar	All	Rigid or semi-rigid galvanized sheet metal	0.30

* With the use of lubrication

The thirteenth and fourteenth paragraphs in Section 50-1.08, "Prestressing," of the Standard Specifications are amended to read:

• Prestressing steel in pretensioned members shall not be cut or released until the concrete in the member has attained a compressive strength of not less than the value shown on the plans or 28 MPa, whichever is greater. In addition to these concrete strength requirements, when epoxy-coated prestressing steel strand is used, the steel shall not be cut or released until the temperature of the concrete surrounding the strand is less than 65°C, and falling.

• When ordered by the Engineer, prestressing steel strands in pretensioned members, if tensioned individually, shall be checked by the Contractor for loss of prestress not more than 48 hours prior to placing concrete for the members. The method and equipment for checking the loss of prestress shall be subject to approval by the Engineer. Strands which show a loss of prestress in excess of 3 percent shall be retensioned to the original computed jacking stress.

Item 2 of the eleventh paragraph in Section 50-1.08, "Prestressing," of the Standard Specifications is amended to read:

2. When the concrete is designated by class or cementitious material content, either the concrete compressive strength shall have reached the strength shown on the plans at the time of stressing or at least 28 days shall have elapsed since the last concrete to be prestressed has been placed, whichever occurs first.

The second and third paragraphs in Section 50-1.09, "Bonding and Grouting," of the Standard Specifications are amended to read:

- Grout shall consist of cement and water and may contain an admixture if approved by the Engineer.
- Cement shall conform to the provisions in Section 90-2.01A, "Cement."

The fifth paragraph in Section 50-1.10, "Samples for Testing," of the Standard Specifications is amended to read:

- The following samples of materials and tendons, selected by the Engineer from the prestressing steel at the plant or jobsite, shall be furnished by the Contractor to the Engineer well in advance of anticipated use:

A. For wire or bars, one 2-m long sample and for strand, one 1.5-m long sample, of each size shall be furnished for each heat or reel.
B. For epoxy-coated strand, one 1.5-m long sample of uncoated strand of each size shall be furnished for each reel.
C. If the prestressing tendon is a bar, one 2-m long sample shall be furnished and in addition, if couplers are to be used with the bar, two 1.25-m long samples of bar, equipped with one coupler and fabricated to fit the coupler, shall be furnished.

The first paragraph in Section 50-1.11, "Payment," of the Standard Specifications is amended to read:

- No separate payment will be made for pretensioning precast concrete members. Payment for pretensioning precast concrete members shall be considered as included in the contract price paid for furnish precast members as provided for in Section 51, "Concrete Structures."

The second paragraph in Section 50-1.11, "Payment," of the Standard Specifications is amended to read:

- The contract lump sum prices paid for prestressing cast-in-place concrete of the types listed in the Engineer's Estimate shall include full compensation for furnishing all labor, materials, tools, equipment, and incidentals, and for doing all work involved in furnishing, placing, and tensioning the prestressing steel in cast-in-place concrete structures, complete in place, as shown on the plans, as specified in these specifications and the special provisions, and as directed by the Engineer.

SECTION 51: CONCRETE STRUCTURES

Issue Date: October 5, 2007

The eleventh paragraph in Section 51-1.05, "Forms," of the Standard Specifications is amended to read:

• Form panels for exposed surfaces shall be furnished and placed in uniform widths of not less than 0.9-m and in uniform lengths of not less than 1.8 m, except at the end of continuously formed surfaces where the final panel length required is less than 1.8 m. Where the width of the member formed is less than 0.9-m, the width of the panels shall be not less than the width of the member. Panels shall be arranged in symmetrical patterns conforming to the general lines of the structure. Except when otherwise provided herein or shown on the plans, panels for vertical surfaces shall be placed with the long dimension horizontal and with horizontal joints level and continuous. Form panels for curved surfaces of columns shall be continuous for a minimum of one quarter of the circumference, or 1.8 m. For walls with sloping footings which do not abut other walls, panels may be placed with the long dimension parallel to the footing. Form panels on each side of the panel joint shall be precisely aligned, by means of supports or fasteners common to both panels, to result in a continuous unbroken concrete plane surface. When prefabricated soffit panels are used, form filler panels joining prefabricated panels shall have a uniform minimum width of 0.3-m and shall produce a smooth uniform surface with consistent longitudinal joint lines between the prefabricated panels.

The first and second paragraph in Section 51-1.06A, "Falsework Design and Drawings," of the Standard Specifications are amended to read:

• The Contractor shall submit to the Engineer working drawings and design calculations for falsework proposed for use at bridges. For bridges where the height of any portion of the falsework, as measured from the ground line to the soffit of the superstructure, exceeds 4.25 m; or where any individual falsework clear span length exceeds 4.85 m; or where provision for vehicular, pedestrian, or railroad traffic through the falsework is made; the drawings shall be signed by an engineer who is registered as a Civil Engineer in the State of California. Six sets of the working drawings and 2 copies of the design calculations shall be furnished. Additional working drawings and design calculations shall be submitted to the Engineer when specified in "Railroad Relations and Insurance" of the special provisions.

• The falsework drawings shall include details of the falsework erection and removal operations showing the methods and sequences of erection and removal and the equipment to be used. The details of the falsework erection and removal operations shall demonstrate the stability of all or any portions of the falsework during all stages of the erection and removal operations.

The seventh paragraph in Section 51-1.06A, "Falsework Design and Drawings," of the Standard Specifications is amended to read:

• In the event that several falsework plans are submitted simultaneously, or an additional plan is submitted for review before the review of a previously submitted plan has been completed, the Contractor shall designate the sequence in which the plans are to be reviewed. In such event, the time to be provided for the review of any plan in the sequence shall be not less than the review time specified above for that plan, plus 2 weeks for each plan of higher priority which is still under review. A falsework plan submittal shall consist of plans for a single bridge or portion thereof. For multi-frame bridges, each frame shall require a separate falsework plan submittal.

Section 51-1.06A, "Falsework Design and Drawings," of the Standard Specifications is amended by adding the following paragraphs:

- If structural composite lumber is proposed for use, the falsework drawings shall clearly identify the structural composite lumber members by grade (E value), species, and type. The Contractor shall provide technical data from the manufacturer showing the tabulated working stress values of the composite lumber. The Contractor shall furnish a certificate of compliance as specified in Section 6-1.07, "Certificates of Compliance," for each delivery of structural composite lumber to the project site.
- For falsework piles with a calculated loading capacity greater than 900 kN, the falsework piles shall be designed by an engineer who is registered as either a Civil Engineer or a Geotechnical Engineer in the State of California, and the calculations shall be submitted to the Engineer.

The first paragraph in Section 51-1.06A(1), "Design Loads," of the Standard Specifications is amended to read:

- The design load for falsework shall consist of the sum of dead and live vertical loads, and an assumed horizontal load. The minimum total design load for any falsework, including members that support walkways, shall be not less than 4800 N/m^2 for the combined live and dead load regardless of slab thickness.

The eighth paragraph in Section 51-1.06A(1), "Design Loads," of the Standard Specifications is amended to read:

- In addition to the minimum requirements specified in this Section 51-1.06A, falsework for box girder structures with internal falsework bracing systems using flexible members capable of withstanding tensile forces only, shall be designed to include the vertical effects caused by the elongation of the flexible member and the design horizontal load combined with the dead and live loads imposed by concrete placement for the girder stems and connected bottom slabs. Falsework comprised of individual steel towers with bracing systems using flexible members capable of withstanding tensile forces only to resist overturning, shall be exempt from these additional requirements.

The third paragraph in Section 51-1.06B, "Falsework Construction," of the Standard Specifications is amended to read:

- When falsework is supported on piles, the piles shall be driven and the actual nominal resistance assessed in conformance with the provisions in Section 49, "Piling."

Section 51-1.06B, "Falsework Construction," of the Standard Specifications is amended by adding the following paragraphs:

- For falsework piles with a calculated nominal resistance greater than 1800 kN, the Contractor shall conduct dynamic monitoring of pile driving and generate field acceptance criteria based on a wave equation analysis. These analyses shall be signed by an engineer who is registered as a Civil Engineer in the State of California and submitted to the Engineer prior to completion of falsework erection.

• Prior to the placement of falsework members above the stringers, the final bracing system for the falsework shall be installed.

Section 51-1.06C, "Removing Falsework," of the Standard Specifications is amended by adding the following paragraph:

• The falsework removal operation shall be conducted in such a manner that any portion of the falsework not yet removed remains in a stable condition at all times.

The sixth paragraph in Section 51-1.09, "Placing Concrete," of the Standard Specifications is amended to read:

• Vibrators used to consolidate concrete containing epoxy-coated bar reinforcement or epoxy-coated prestressing steel shall have a resilient covering to prevent damage to the epoxy-coating on the reinforcement or prestressing steel.

The fourth paragraph in Section 51-1.12D, "Sheet Packing, Preformed Pads, and Board Fillers," of the Standard Specifications is amended to read:

• Expanded polystyrene shall be a commercially available polystyrene board. Expanded polystyrene shall have a minimum flexural strength of 240 kPa determined in conformance with the requirements in ASTM Designation: C 203 and a compressive yield strength of between 110 and 275 kPa at 5 percent compression. Surfaces of expanded polystyrene against which concrete is placed shall be faced with hardboard. Hardboard shall be 3 mm minimum thickness, conforming to ANSI A135.4, any class. Other facing materials may be used provided they furnish equivalent protection. Boards shall be held in place by nails, waterproof adhesive, or other means approved by the Engineer.

Section 51-1.12F, "Sealed Joints," of the Standard Specifications is amended by adding the following paragraph:

• The opening of the joints at the time of placing shall be that shown on the plans adjusted for temperature. Care shall be taken to avoid impairment of the clearance in any manner.

The first paragraph in Section 51-1.12F, "Sealed Joints," of the Standard Specifications is amended to read:

• Where shown on the plans, joints in structures shall be sealed with joint seals, joint seal assemblies, or seismic joints in conformance with the details shown on the plans, the provisions in these specifications, and the special provisions.

The 2nd paragraph of Section 51-1.12F, "Sealed Joints," of the Standard Specifications is amended to read:

• Type A and AL joint seals shall consist of a groove in the concrete that is filled with field-mixed silicone sealant.

The fourth paragraph in Section 51-1.12F, "Sealed Joints," of the Standard Specifications is amended to read:

• Joint seal assemblies and seismic joints shall consist of metal or metal and elastomeric assemblies which are anchored or cast into a recess in the concrete over the joint. Strip seal joint seal assemblies consist of only one joint cell. Modular unit joint seal assemblies consist of more than one joint cell.

The fifth paragraph in Section 51-1.12F, "Sealed Joints," of the Standard Specifications is amended to read:

• The Movement Rating (MR) shall be measured normal to the longitudinal axis of the joint. The type of seal to be used for the MR shown on the plans shall be as follows:

Movement Rating (MR)	Seal Type
MR ≤ 25 mm	Type A or Type B
25 mm < MR ≤ 50 mm	Type B
50 mm < MR ≤ 100 mm	Joint Seal Assembly (Strip Seal)
MR > 100 mm	Joint Seal Assembly (Modular Unit) or Seismic Joint

The 1st paragraph of Section 51-1.12F(3)(a), "Type A and AL Seal," of the Standard Specifications is amended to read:

• The sealant must consist of a 2-component silicone sealant that will withstand up to ±50 percent movement.

The 2nd paragraph of Section 51-1.12F(3)(a), "Type A and AL Seal," of the Standard Specifications is amended to read:

• Silicone sealants must be tested under California Test 435 and must comply with the following:

Specification	Requirement
Modulus at 150 percent elongation	35–520 kPa
Recovery	17 mm max.
Notch Test	Notched or loss of bond 6 mm, max.
Water Resistance	Notched or loss of bond 6 mm, max.
Ultraviolet Exposure ASTM Designation: G 154, Table X2.1,Cycle 2.	No more than slight checking or cracking.
Cone Penetration	4.5-12.0 mm

The 3rd paragraph of Section 51-1.12F(3)(a), "Type A and AL Seal," of the Standard Specifications is deleted.

The 8th paragraph of Section 51-1.12F(3)(a), "Type A and AL Seal," of the Standard Specifications is deleted.

The 10th paragraph of Section 51-1.12F(3)(a), "Type A and AL Seal," of the Standard Specifications is amended to read:

• A Certificate of Compliance accompanied by a certified test report must be furnished for each batch of silicone sealant in conformance with the provisions in Section 6-1.07, "Certificates of Compliance."

The 2nd paragraph of Section 51-1.12F(3)(b), "Type B Seal," of the Standard Specifications is amended to read:

• The preformed elastomeric joint seal must conform to the requirements in ASTM D 2628 and the following:

1. The seal must consist of a multichannel, nonporous, homogeneous material furnished in a finished extruded form.
2. The minimum depth of the seal measured at the contact surface must be at least 95 percent of the minimum uncompressed width of the seal as designated by the manufacturer.
3. When tested in conformance with the requirements in California Test 673 for Type B seals, joint seals must provide a movement rating (MR) of not less than that shown on the plans.
4. The top and bottom edges of the joint seal must maintain continuous contact with the sides of the groove over the entire range of joint movement.
5. The seal must be furnished full length for each joint with no more than 1 shop splice in any 18 m length of seal.
6. The Contractor must demonstrate the adequacy of the procedures to be used in the work before installing seals in the joints.
7. One field splice per joint may be made at locations and by methods approved by the Engineer. The seals are to be manufactured full length for the intended joint, then cut at the approved splice section and rematched before splicing. The Contractor must submit splicing details prepared by the joint seal manufacturer for approval before beginning splicing work.
8. Shop splices and field splices must have no visible offset of exterior surfaces and must show no evidence of bond failure.
9. At all open ends of the seal that would admit water or debris, each cell must be filled to a depth of 80 mm with commercial quality open cell polyurethane foam or closed by other means subject to approval by the Engineer.

The 7th paragraph of Section 51-1.12F(3)(b), "Type B Seal," of the Standard Specifications is amended to read:

• The joint seal must be installed full length for each joint with equipment that does not twist or distort the seal, elongate the seal longitudinally, or otherwise cause damage to the seal or to the concrete forming the groove.

Section 51-1.12F(3)(c), "Joint Seal Assemblies," of the Standard Specifications is amended to read:

(c) Joint Seal Assemblies and Seismic Joints

• Joint seal assemblies and seismic joints shall be furnished and installed in joints in bridge decks as shown on the plans and as specified in the special provisions.

The eighth paragraph in Section 51-1.12H(1), "Plain and Fabric Reinforced Elastomeric Bearing Pads," of the Standard Specifications is amended to read:

- The elastomer, as determined from test specimens, shall conform to the following:

Test	ASTM Designation	Requirement
Tensile strength, MPa	D 412	15.5 Min.
Elongation at break, percent	D 412	350 Min.
Compression set, 22 h at 70°C, percent	D 395 (Method B)	25 Max.
Tear strength, kN/m	D 624 (Die C)	31.5 Min.
Hardness (Type A)	D 2240 with 2 kg. mass	55 ±5
Ozone resistance 20% strain, 100 h at 40°C ±2°C	D 1149 (except 100 ±20 parts per 100 000 000)	No cracks
Instantaneous thermal stiffening at -40°C	D 1043	Shall not exceed 4 times the stiffness measured at 23°C
Low temperature brittleness at -40°C	D 746 (Procedure B)	Pass

The table in the ninth paragraph of Section 51-1.12H(1), "Plain and Fabric Reinforced Elastomeric Bearing Pads," of the Standard Specifications is amended to read:

Tensile strength, percent	-15
Elongation at break, percent	-40; but not less than 300% total elongation of the material
Hardness, points	+10

The first paragraph in Section 51-1.12H(2), "Steel Reinforced Elastomeric Bearings," of the Standard Specifications is amended to read:

- Steel reinforced elastomeric bearings shall conform to the requirements for steel-laminated elastomeric bearings in ASTM Designation: D 4014 and the following:

A. The bearings shall consist of alternating steel laminates and internal elastomer laminates with top and bottom elastomer covers. Steel laminates shall have a nominal thickness of 1.9 mm (14 gage). Internal elastomer laminates shall have a thickness of 12 mm, and top and bottom elastomer covers shall each have a thickness of 6 mm. The combined thickness of internal elastomer laminates and top and bottom elastomer covers shall be equal to the bearing pad thickness shown on the plans. The elastomer cover to the steel laminates at the sides of the bearing shall be 3 mm. If guide pins or other devices are used to control the side cover over the steel laminates, any exposed portions of the steel laminates shall be sealed by vulcanized patching. The length, width, or diameter of the bearings shall be as shown on the plans.

B. The total thickness of the bearings shall be equal to the thickness of elastomer laminates and covers plus the thickness of the steel laminates.

C. Elastomer for steel reinforced elastomeric bearings shall conform to the provisions for elastomer in Section 51-1.12H(1), "Plain and Fabric Reinforced Elastomeric Bearing Pads."

D. A Certificate of Compliance conforming to the provisions in Section 6-1.07, "Certificates of Compliance," shall be furnished to the Engineer certifying that the bearings to be furnished conform to all of the above provisions. The Certificate of Compliance shall be supported by a certified copy of the results of tests performed by the manufacturer on the bearings.

E. One sample bearing shall be furnished to the Engineer from each lot of bearings to be furnished for the contract. Samples shall be available at least 3 weeks in advance of intended use. The sample bearing shall be one of the following:

Bearing Pad Thickness as Shown on the Plans	Sample Bearing
≤ 50 mm	Smallest complete bearing shown on the plans
> 50 mm	* 57 ± 3 mm thick sample not less than 200 mm x 305 mm in plan and cut by the manufacturer from the center of one of the thickest complete bearings

* The sample bearing plus remnant parts of the complete bearing shall be furnished to the Engineer.

F. A test specimen taken from the sample furnished to the Engineer will be tested in conformance with the requirements in California Test 663. Specimens tested shall show no indication of loss of bond between the elastomer and steel laminates.

The first paragraph in Section 51-1.135, "Mortar," of the Standard Specifications is amended to read:

• Mortar shall be composed of cementitious material, sand, and water proportioned and mixed as specified in this Section 51-1.135.

The third paragraph in Section 51-1.135, "Mortar," of the Standard Specifications is amended to read:

• The proportion of cementitious material to sand, measured by volume, shall be 1:2 unless otherwise specified.

The fourth paragraph in Section 51-1.14, "Waterstops," of the Standard Specifications is amended to read:

• Neoprene shall be manufactured from a vulcanized elastomeric compound containing neoprene as the sole elastomer and shall conform to the following:

Test	ASTM Designation	Requirement
Tensile strength, MPa	D 412	13.8 Min.
Elongation at break, percent	D 412	300 Min.
Compression set, 22 h at 70°C, percent	D 395 (Method B)	30 Max.
Tear strength, kN/m	D 624 (Die C)	26.3 Min.
Hardness (Type A)	D 2240	55±5
Ozone resistance 20% strain, 100 h at 38°C ±1°C	D 1149 (except 100± 20 parts per 100 000 000)	No cracks
Low temperature brittleness at -40°C	D 746 (Procedure B)	Pass
Flame resistance	C 542	Must not propagate flame
Oil Swell, ASTM Oil #3, 70 h at 100°C, volume change, percent	D 471	80 Max.
Water absorption, immersed 7 days at 70°C, change in mass, percent	D 471	15 Max.

The first sentence of the fourth paragraph in Section 51-1.17, "Finish Bridge Decks," of the Standard Specifications is amended to read:

• The smoothness of completed roadway surfaces of structures, approach slabs and the adjacent 15 m of approach pavement, and the top surfaces of concrete decks which are to be covered with another material, will be tested by the Engineer with a bridge profilograph in conformance with the requirements in California Test 547 and the requirements herein.

Section 51-1.17, "Finishing Bridge Decks," of the Standard Specifications is amended by deleting the seventh, thirteenth and fourteenth paragraphs and adding the following subsection:

51-1.17A DECK CRACK TREATMENT

• The Contractor shall use all means necessary to minimize the development of shrinkage cracks.

• The Contractor shall remove all equipment and materials from the deck and clean the surface as necessary for the Engineer to measure the surface crack intensity. Surface crack intensity will be determined by the Engineer after completion of concrete cure, before prestressing, and before the release of falsework. In any 50 square meter portion of deck within the limits of the new concrete deck, should the intensity of cracking be such that there are more than 5 m of cracks whose width at any location exceeds 0.5 mm, the deck shall be treated with methacrylate resin. The area of deck to be treated shall have a width that extends for the entire width of new deck inside the concrete barriers and a length that extends at least 1.5 m beyond the furthest single continuous crack outside the 50 square meter portion, measured from where that crack exceeds 0.5 mm in width, as determined by the Engineer.

• Deck crack treatment shall include furnishing, testing, and application of methacrylate resin and sand. If grinding is required, deck treatment shall take place before grinding.

51-1.17A(1) Submittals

• Before starting deck treatment, the Contractor shall submit plans in conformance with Section 5-1.02, "Plans and Working Drawings," for the following:

1. Public safety plan for the use of methacrylate resin
2. Placement plan for the construction operation

• The plans shall identify materials, equipment, and methods to be used.

• The public safety plan for the use of methacrylate resin shall include details for the following:

1. Shipping
2. Storage
3. Handling
4. Disposal of residual methacrylate resin and the containers

• The placement plan for construction shall include the following:

1. Schedule of deck treatment for each bridge. The schedule shall be consistent with "Maintaining Traffic," of the special provisions and shall include time for the Engineer to perform California Test 342.
2. Methods and materials to be used, including the following:

    2.1. Description of equipment for applying the resin
    2.2. Description of equipment for applying the sand
    2.3. Gel time range and final cure time for the resin

• If the measures proposed in the safety plan are inadequate to provide for public safety associated with the use of methacrylate resin, the Engineer will reject the plan and direct the Contractor to revise the plan. Directions for revisions will be in writing and include detailed comments. The Engineer will notify the Contractor of the approval or rejection of a submitted or revised plan within 15 days of receipt of that plan.

• In the event the Engineer fails to complete the review within the time allowed, and if, in the opinion of the Engineer, completion of the work is delayed or interfered with by reason of the Engineer's delay in completing the review, the Contractor will be compensated for any resulting loss, and an extension of time will be granted, in the same manner as provided for in Section 8-1.09, "Right of Way Delays."

51-1.17A(2) Materials

• Before using methacrylate resin, a Material Safety Data Sheet shall be submitted for each shipment of resin.

• Methacrylate resin shall be low odor and have a high molecular weight. Before adding initiator, the resin shall have a maximum volatile content of 30 percent when tested in conformance with the requirements in ASTM Designation: D 2369, and shall conform to the following:

PROPERTY	REQUIREMENT	TEST METHOD
* Viscosity	0.025 Pa·s, maximum, (Brookfield RVT with UL adaptor, 50 RPM at 25°C	ASTM D 2196
* Specific Gravity	0.90 minimum, at 25°C	ASTM D 1475
* Flash Point	82°C, minimum	ASTM D 3278
* Vapor Pressure	1.0 mm Hg, maximum, at 25°C	ASTM D 323
Tack-free Time	400 minutes, maximum, at 25°C	Specimen prepared per California Test 551
PCC Saturated Surface-Dry Bond Strength	3.5 MPa, minimum at 24 hours and 21±1°C	California Test 551
* Test shall be performed before adding initiator.		

51-1.17A(3) Testing

• The Contractor shall allow 20 days for sampling and testing by the Engineer of the methacrylate resin before proposed use. If bulk resin is to be used, the Contractor shall notify the Engineer in writing at least 15 days before the delivery of the bulk resin to the job site. Bulk resin is any resin stored in containers in excess of 209 liters.

• Before starting production treatment, the Contractor shall treat a test area of approximately 50 square meters that is within the project limits and at a location approved by the Engineer. When available the test area shall be outside of the traveled way. Weather and pavement conditions during the test treatment shall be similar to those expected on the deck. Equipment used for testing shall be similar to those used for deck treating operations.

• During test and production deck treatment, test tiles shall be used to evaluate the resin cure time. The Contractor shall coat at least one 102 mm x 102 mm commercial quality smooth glazed tile for each batch of methacrylate resin. The coated tile shall be placed adjacent to the corresponding treated area. Sand shall not be applied to the test tiles.

• The acceptance criteria for a treated area is as follows:

1. The test tiles are dry to the touch.
2. The treated deck surface is tack free (non-oily).
3. The sand cover adheres and resists brushing by hand.
4. Excess sand has been removed by vacuuming or sweeping.
5. The coefficient of friction is at least 0.35 when tested in conformance with California Test 342.

• If a test or production area fails to meet the acceptance criteria, as determined by the Engineer, the treatment will be rejected, and the treatment shall be removed and replaced until the area complies with the acceptance criteria.

51-1.17A(4) Construction

• Equipment shall be fitted with suitable traps, filters, drip pans, or other devices as necessary to prevent oil or other deleterious material from being deposited on the deck.

- Before deck treatment with methacrylate resin, the bridge deck surface shall be cleaned by abrasive blasting, and all loose material shall be blown from visible cracks using high-pressure air. Concrete curing seals shall be cleaned from the deck surface to be treated, and the deck shall be dry when blast cleaning is performed. If the deck surface becomes contaminated at any time before placing the resin, the deck surface shall be cleaned by abrasive blasting.
- Where abrasive blasting is being performed within 3 m of a lane occupied by public traffic, the residue including dust shall be removed immediately after contact between the abrasive and the surface being treated. The removal shall be by a vacuum attachment operating concurrently with the abrasive blasting operation.
- A compatible promoter/initiator system shall be capable of providing the resin gel time range shown on the placement plan. Gel time shall be adjusted to compensate for the changes in temperature throughout treatment application.
- Resin shall be applied by machine and by using a two-part resin system with a promoted resin for one part and an initiated resin for the other part. This two-part resin system shall be combined at equal volumes to the spray bars through separate positive displacement pumps. Combining of the 2 components shall be by either static in-line mixers or by external intersecting spray fans. The pump pressure at the spray bars shall not be great enough to cause appreciable atomization of the resin. Compressed air shall not be used to produce the spray. A shroud shall be used to enclose the spray bar apparatus.
- At the Contractor's option, manual application may be used. For manual application, (1) the quantity of resin mixed with promoter and initiator shall be limited to 20 L at a time, and (2) the resin shall be distributed by squeegees and brooms within 10 minutes after application.
- The Contractor shall apply methacrylate resin only to the specified area. Barriers, railing, joints, and drainage facilities shall be adequately protected to prevent contamination by the treatment material. Contaminated items shall be repaired at the Contractor's expense.
- The relative humidity shall be less than 90 percent at the time of treatment. The prepared area shall be dry and the surface temperature shall be at least 10°C , and not more than 38°C when the resin is applied. The rate of application of promoted/initiated resin shall be 2.2 square meter per liter; the exact rate shall be determined by the Engineer.
- The deck surfaces to be treated shall be completely covered with resin so the resin penetrates and fills all cracks. The resin shall be applied within 5 minutes after complete mixing. A significant increase in viscosity shall be cause for rejection. Excess material shall be redistributed by squeegees or brooms within 10 minutes after application. For textured deck surfaces, including grooved surfaces, excess material shall be removed from the texture indentations.
- After the resin has been applied, at least 20 minutes shall elapse before applying sand. The sand shall be commercial quality dry blast sand. At least 95 percent of the sand shall pass the 2.36-mm sieve and at least 95 percent shall be retained on the 850-μm sieve. The sand shall be applied at a rate of approximately one kilogram per square meter or until refusal as determined by the Engineer.
- Traffic will not be allowed on treated areas until the acceptance criteria has been met as determined by the Engineer.

The second paragraph in Section 51-1.18C, "Class 2 Surface Finish (Gun Finish)," of the Standard Specifications is amended to read:

- When Class 2 surface finish (gun finish) is specified, ordinary surface finish shall first be completed. The concrete surfaces shall then be abrasive blasted to a rough texture and thoroughly washed down with water. While the washed surfaces are damp, but not wet, a finish

coating of machine applied mortar, approximately 6 mm thick, shall be applied in not less than 2 passes. The coating shall be pneumatically applied and shall consist of either (1) sand, cementitious material, and water mechanically mixed prior to its introduction to the nozzle or (2) premixed sand and cementitious material to which water is added prior to its expulsion from the nozzle. The use of admixtures shall be subject to the approval of the Engineer as provided in Section 90, "Portland Cement Concrete." Unless otherwise specified, supplementary cementitious materials will not be required. The proportion of cementitious material to sand shall be not less than one to 4, unless otherwise directed by the Engineer. Sand shall be of a grading suitable for the purpose intended. The machines shall be operated and the coating shall be applied in conformance with standard practice. The coating shall be firmly bonded to the concrete surfaces on which it is applied.

The fifth paragraph in Section 51-1.18C, "Class 2 Surface Finish (Gun Finish)," of the Standard Specifications is amended to read:

- When surfaces to be finished are in pedestrian undercrossings, the sand shall be silica sand and the cementitious material shall be standard white portland cement.

The fourteenth paragraph in Section 51-1.23, "Payment," of the Standard Specifications is amended by deleting "and injecting epoxy in cracks".

Section 51-1.23, "Payment," of the Standard Specifications is amended by adding the following:

- Full compensation for deck crack treatment, including execution of the public safety plan, shall be considered as included in the contract price paid per cubic yard for structural concrete, bridge, and no additional compensation will be allowed therefor.

SECTION 52: REINFORCEMENT

Issue Date: June 30, 2006

The first paragraph in Section 52-1.02A, "Bar Reinforcement," of the Standard Specifications is amended to read:

- Reinforcing bars shall be low-alloy steel deformed bars conforming to the requirements in ASTM Designation: A 706/A 706M, except that deformed or plain billet-steel bars conforming to the requirements in ASTM Designation: A 615/A 615M, Grade 280 or 420, may be used as reinforcement in the following 5 categories:

A. Slope and channel paving,
B. Minor structures,
C. Sign and signal foundations (pile and spread footing types),
D. Roadside rest facilities, and
E. Concrete barrier Type 50 and Type 60 series and temporary railing.

The third paragraph in Section 52-1.04, "Inspection," of the Standard Specifications is amended to read:

• A Certificate of Compliance conforming to the provisions in Section 6-1.07, "Certificates of Compliance," shall also be furnished for each shipment of epoxy-coated bar reinforcement or wire reinforcement certifying that the coated reinforcement conforms to the requirements in ASTM Designation: A 775/A 775M or A 884/A 884M respectively, and the provisions in Section 52-1.02B, "Epoxy-coated Reinforcement." The Certificate of Compliance shall include all of the certifications specified in ASTM Designation: A 775/A 775M or A 884/A 884M respectively.

The third paragraph of Section 52-1.06, "Bending," of the Standard Specifications is amended to read:

• Hooks and bends shall conform to the provisions of the Building Code Requirements for Structural Concrete of the American Concrete Institute.

Section 52-1.07 "Placing," of the Standard Specifications is amended by deleting item C of the third paragraph.

The eleventh paragraph in Section 52-1.07, "Placing," of the Standard Specifications is amended to read:

• Attention is directed to the provisions in Section 7-1.09, "Public Safety." Whenever a portion of an assemblage of bar reinforcing steel that is not encased in concrete exceeds 6 m in height, the Contractor shall submit to the Engineer for approval, in accordance with the provisions in Section 5-1.02, "Plans and Working Drawings," working drawings and design calculations for the temporary support system to be used. The working drawings and design calculations shall be signed by an engineer who is registered as a Civil Engineer in the State of California. The temporary support system shall be designed to resist all expected loads and shall be adequate to prevent collapse or overturning of the assemblage. If the installation of forms or other work requires revisions to or temporary release of any portion of the temporary support system, the working drawings shall show the support system to be used during each phase of construction. The minimum horizontal wind load to be applied to the bar reinforcing steel assemblage, or to a combined assemblage of reinforcing steel and forms, shall be the sum of the products of the wind impact area and the applicable wind pressure value for each height zone. The wind impact area is the total projected area of the cage normal to the direction of the applied wind. Wind pressure values shall be determined from the following table:

Height Zone (Meters above ground)	Wind Pressure Value (Pa)
0-9.0	960
9.1-15.0	1200
15.1-30.0	1440
Over 30	1675

Section 52-1.08 "Splicing," of the Standard Specifications is amended to read:

52-1.08 SPLICING

• Splices of reinforcing bars shall consist of lap splices, service splices, or ultimate butt splices.

• Splicing of reinforcing bars will not be permitted at a location designated on the plans as a "No-Splice Zone." At the option of the Contractor, reinforcing bars may be continuous at locations where splices are shown on the plans. The location of splices, except where shown on the plans, shall be determined by the Contractor using available commercial lengths where practicable.

• Unless otherwise shown on the plans, splices in adjacent reinforcing bars at any particular section shall be staggered. The minimum distance between staggered lap splices or mechanical lap splices shall be the same as the length required for a lap splice in the largest bar. The minimum distance between staggered butt splices shall be 600 mm, measured between the midpoints of the splices along a line which is centered between the axes of the adjacent bars.

52-1.08A Lap Splicing Requirements

• Splices made by lapping shall consist of placing reinforcing bars in contact and wiring them together, maintaining the alignment of the bars and the minimum clearances. Should the Contractor elect to use a butt welded or mechanical splice at a location not designated on the plans as requiring a service or ultimate butt splice, this splice shall conform to the testing requirements for service splice.

• Reinforcing bars shall not be spliced by lapping at locations where the concrete section is not sufficient to provide a minimum clear distance of 50 mm between the splice and the nearest adjacent bar. The clearance to the surface of the concrete specified in Section 52-1.07, "Placing," shall not be reduced.

• Reinforcing bars Nos. 43 and 57 shall not be spliced by lapping.

• Where ASTM Designations: A 615/A 615M, Grade 420 or A 706/A 706M reinforcing bars are required, the length of lap splices shall be as follows: Reinforcing bars No. 25 or smaller shall be lapped at least 45 diameters of the smaller bar joined; and reinforcing bars Nos. 29, 32, and 36 shall be lapped at least 60 diameters of the smaller bar joined, except when otherwise shown on the plans.

• Where ASTM Designation: A 615/A 615M, Grade 280 reinforcing bars are permitted, the length of lap splices shall be as follows: Reinforcing bars No. 25 or smaller shall be lapped at least 30 diameters of the smaller bar joined; and reinforcing bars Nos. 29, 32, and 36 shall be lapped at least 45 diameters of the smaller bar joined, except when otherwise shown on the plans.

• Splices in bundled bars shall conform to the following:

A In bundles of 2 bars, the length of the lap splice shall be the same as the length of a single bar lap splice.

B. In bundles of 3 bars, the length of the lap splice shall be 1.2 times the length of a single bar lap splice.

• Welded wire fabric shall be lapped such that the overlap between the outermost cross wires is not less than the larger of:

A. 150 mm,

B. The spacing of the cross wires plus 50 mm, or

C. The numerical value of the longitudinal wire size (MW-Size Number) times 370 divided by the spacing of the longitudinal wires in millimeters.

52-1.08B Service Splicing and Ultimate Butt Splicing Requirements

• Service splices and ultimate butt splices shall be either butt welded or mechanical splices, shall be used at the locations shown on the plans, and shall conform to the requirements of these specifications and the special provisions.

52-1.08B(1) Mechanical Splices

• Mechanical splices to be used in the work shall be on the Department's current prequalified list before use. The prequalified list can be obtained from the Department's internet site listed in the special provisions or by contacting the Transportation Laboratory directly.

• When tested in conformance with the requirements in California Test 670, the total slip shall not exceed the values listed in the following table:

Reinforcing Bar Number	Total Slip (μm)
13	250
16	250
19	250
22	350
25	350
29	350
32	450
36	450
43	600
57	750

• Slip requirements shall not apply to mechanical lap splices, splices that are welded, or splices that are used on hoops.

• Splicing procedures shall be in conformance with the manufacturer's recommendations, except as modified in this section. Splices shall be made using the manufacturer's standard equipment, jigs, clamps, and other required accessories.

• Splice devices shall have a clear coverage of not less than 40 mm measured from the surface of the concrete to the outside of the splice device. Stirrups, ties, and other reinforcement shall be adjusted or relocated, and additional reinforcement shall be placed, if necessary, to provide the specified clear coverage to reinforcement.

• The Contractor shall furnish the following information for each shipment of splice material in conformance with the provisions in Section 6-1.07, "Certificates of Compliance:"

A. The type or series identification of the splice material including tracking information for traceability.
B. The bar grade and size number to be spliced.
C. A copy of the manufacturer's product literature giving complete data on the splice material and installation procedures.
D. A statement that the splicing systems and materials used in conformance with the manufacturer's installation procedures will develop the required tensile strengths, based on the nominal bar area, and will conform to the total slip requirements and the other requirements in these specifications.
E. A statement that the splice material conforms to the type of mechanical splice in the Department's current prequalified list.

52-1.08B(2) Butt Welded Splices

- Except for resistance butt welds, butt welded splices of reinforcing bars shall be complete joint penetration butt welds conforming to the requirements in AWS D 1.4, and these specifications.
- Welders and welding procedures shall be qualified in conformance with the requirements in AWS D 1.4.
- Only the joint details and dimensions as shown in Figure 3.2, "Direct Butt Joints," of AWS D 1.4, shall be used for making complete joint penetration butt welds of bar reinforcement. Split pipe backing shall not be used.
- Butt welds shall be made with multiple weld passes using a stringer bead without an appreciable weaving motion. The maximum stringer bead width shall be 2.5 times the diameter of the electrode and slagging shall be performed between each weld pass. Weld reinforcement shall not exceed 4 mm in convexity.
- Electrodes used for welding shall meet the minimum Charpy V-notch impact requirement of 27°J at –20°C.
- For welding of bars conforming to the requirements of ASTM Designation: A 615/A 615M, Grade 280 or Grade 420, the requirements of Table 5.2, "Minimum Preheat and Interpass Temperatures," of AWS D 1.4 are superseded by the following:

  The minimum preheat and interpass temperatures shall be 200°C for Grade 280 bars and 300°C for Grade 420 bars. Immediately after completing the welding, at least 150 mm of the bar on each side of the splice shall be covered by an insulated wrapping to control the rate of cooling. The insulated wrapping shall remain in place until the bar has cooled below 90°C.

- When welding different grades of reinforcing bars, the electrode shall conform to Grade 280 bar requirements and the preheat shall conform to the Grade 420 bar requirements.
- In the event that any of the specified preheat, interpass, and post weld cooling temperatures are not met, all weld and heat affected zone metal shall be removed and the splice rewelded.
- Welding shall be protected from air currents, drafts, and precipitation to prevent loss of heat or loss of arc shielding. The method of protecting the welding area from loss of heat or loss of arc shielding shall be subject to approval by the Engineer.
- Reinforcing bars shall not be direct butt spliced by thermite welding.
- Procedures to be used in making welded splices in reinforcing bars, and welders employed to make splices in reinforcing bars, shall be qualified by tests performed by the Contractor on sample splices of the type to be used, before making splices to be used in the work.

52-1.08B(3) Resistance Butt Welds

- Shop produced resistance butt welds shall be produced by a fabricator who is approved by the Transportation Laboratory. The list of approved fabricators can be obtained from the Department's internet site or by contacting the Transportation Laboratory directly.
- Before manufacturing hoops using resistance butt welding, the Contractor shall submit to the Engineer the manufacturer's Quality Control (QC) manual for the fabrication of hoops. As a minimum, the QC manual shall include the following:

A. The pre-production procedures for the qualification of material and equipment.
B. The methods and frequencies for performing QC procedures during production.

C. The calibration procedures and calibration frequency for all equipment.
D. The welding procedure specification (WPS) for resistance welding.
E. The method for identifying and tracking lots.

52-1.08C Service Splice and Ultimate Butt Splice Testing Requirements

• The Contractor shall designate in writing a splicing Quality Control Manager (QCM). The QCM shall be responsible directly to the Contractor for 1) the quality of all service and ultimate butt splicing including the inspection of materials and workmanship performed by the Contractor and all subcontractors; and 2) submitting, receiving, and approving all correspondence, required submittals, and reports regarding service and ultimate splicing to and from the Engineer.

• The QCM shall not be employed or compensated by any subcontractor, or by other persons or entities hired by subcontractors, who will provide other services or materials for the project. The QCM may be an employee of the Contractor.

• Testing on prequalification and production sample splices shall be performed at the Contractor's expense, at an independent qualified testing laboratory. The laboratory shall not be employed or compensated by any subcontractor, or by other persons or entities hired by subcontractors who will provide other services or materials for the project, and shall have the following:

A. Proper facilities, including a tensile testing machine capable of breaking the largest size of reinforcing bar to be tested with minimum lengths as shown in this section.
B. A device for measuring the total slip of the reinforcing bars across the splice to the nearest 25 μm, that, when placed parallel to the longitudinal axis of the bar is able to simultaneously measure movement across the splice at 2 locations 180 degrees apart.
C. Operators who have received formal training for performing the testing requirements of ASTM Designation: A 370 and California Test 670.
D. A record of annual calibration of testing equipment performed by an independent third party that has 1) standards that are traceable to the National Institute of Standards and Technology, and 2) a formal reporting procedure, including published test forms.

• The Contractor shall provide samples for quality assurance testing in conformance with the provisions in these specifications and the special provisions.

• Prequalification and production sample splices shall be 1) a minimum length of 1.5 meters for reinforcing bars No. 25 or smaller, and 2 meters for reinforcing bars No. 29 or larger, with the splice located at mid-point; and 2) suitably identified before shipment with weatherproof markings that do not interfere with the Engineer's tamper-proof markings or seals. Splices that show signs of tampering will be rejected.

• Shorter length sample splice bars may be furnished if approved in writing by the Engineer.

• The Contractor shall ensure that sample splices are properly secured and transported to the testing laboratory in such a manner that no alterations to the physical conditions occur during transportation. Sample splices shall be tested in the same condition as received. No modifications to the sample splices shall be made before testing.

• Each set or sample splice, as defined herein, shall be identified as representing either a prequalification or production test sample splice.

• For the purpose of production testing, a lot of either service splices or ultimate butt splices is defined as 1) 150, or fraction thereof, of the same type of mechanical splices used for each bar size and each bar deformation pattern that is used in the work, or 2) 150, or fraction

thereof, of complete joint penetration butt welded splices or resistance butt welded splices for each bar size used in the work. If different diameters of hoop reinforcement are shown on the plans, separate lots shall be used for each different hoop diameter.

• Whenever a lot of splices is rejected, the rejected lot and subsequent lots of splices shall not be used in the work until 1) the QCM performs a complete review of the Contractor's quality control process for these splices, 2) a written report is submitted to the Engineer describing the cause of failure for the splices in this lot and provisions for preventing similar failures in future lots, and 3) the Engineer has provided the Contractor with written notification that the report is acceptable. The Engineer shall have 3 working days after receipt of the report to provide notification to the Contractor. In the event the Engineer fails to provide notification within the time allowed, and if, in the opinion of the Engineer, completion of the work is delayed or interfered with by reason of the Engineer's delay in providing notification, the Contractor will be compensated for any resulting loss, and an extension of time will be granted in the same manner as provided for in Section 8-1.09, "Right of Way Delays."

52-1.08C(1) Splice Prequalification Report

• Before using any service splices or ultimate butt splices in the work, the Contractor shall submit a Splice Prequalification Report. The report shall include splice material information, names of the operators who will be performing the splicing, and descriptions of the positions, locations, equipment, and procedures that will be used in the work.

• The Splice Prequalification Report shall also include certifications from the fabricator for prequalifications of operators and procedures based on sample tests performed no more than 2 years before submitting the report. Each operator shall be certified by performing 2 sample splices for each bar size of each splice type that the operator will be performing in the work. For deformation-dependent types of splice devices, each operator shall be certified by performing 2 additional samples for each bar size and deformation pattern that will be used in the work.

• Prequalification sample splices shall be tested by an independent qualified testing laboratory and shall conform to the appropriate production test criteria and slip requirements specified herein. When epoxy-coated reinforcement is required, resistance butt welded sample splices shall have the weld flash removed by the same procedure as will be used in the work, before coating and testing. The Splice Prequalification Report shall include the certified test results for all prequalification sample splices.

• The QCM shall review and approve the Splice Prequalification Report before submitting it to the Engineer for approval. The Contractor shall allow 2 weeks for the review and approval of a complete report before performing any service splicing or ultimate butt splicing in the work. In the event the Engineer fails to complete the review within the time allowed, and in the opinion of the Engineer, completion of the work is delayed or interfered with by reason of the Engineer's delay in completing the review, the Contractor will be compensated for any resulting loss, and an extension of time will be granted, in the same manner as provided for in Section 8-1.09, "Right of Way Delays."

52-1.08C(2) Service Splice Test Criteria

• Service production and quality assurance sample splices shall be tensile tested in conformance with the requirements in ASTM Designation: A 370 and California Test 670 and shall develop a minimum tensile strength of not less than 550 MPa.

52-1.08C(2)(a) Production Test Requirements for Service Splices

- Production tests shall be performed by the Contractor's independent laboratory for all service splices used in the work. A production test shall consist of testing 4 sample splices prepared for each lot of completed splices. The samples shall be prepared by the Contractor using the same splice material, position, operators, location, and equipment, and following the same procedure as used in the work.
- At least one week before testing, the Contractor shall notify the Engineer in writing of the date when and the location where the testing of the samples will be performed.
- The 4 samples from each production test shall be securely bundled together and identified with a completed sample identification card before shipment to the independent laboratory. The card will be furnished by the Engineer. Bundles of samples containing fewer than 4 samples of splices shall not be tested.
- Before performing any tensile tests on production test sample splices, one of the 4 samples shall be tested for, and shall conform to, the requirements for total slip. Should this sample not meet the total slip requirements, one retest, in which the 3 remaining samples are tested for total slip, will be allowed. Should any of the 3 remaining samples not conform to the total slip requirements, all splices in the lot represented by this production test will be rejected.
- If 3 or more sample splices from a production test conform to the provisions in this Section 52-1.08C(2),"Service Splice Test Criteria," all splices in the lot represented by this production test will be considered acceptable, provided each of the 4 samples develop a minimum tensile strength of not less than 420 MPa.
- Should only 2 sample splices from a production test conform to the provisions in this Section 52-1.08C(2), "Service Splice Test Criteria," one additional production test shall be performed on the same lot of splices. This additional production test shall consist of testing 4 samples splices that have been randomly selected by the Engineer and removed by the Contractor from the actual completed lot of splices. Should any of the 4 splices from this additional test fail to conform to these provisions, all splices in the lot represented by these production tests will be rejected.
- If only one sample splice from a production test conforms to the provisions in this Section 52-1.08C(2), "Service Splice Test Criteria," all splices in the lot represented by this production test will be rejected.
- If a production test for a lot fails, the Contractor shall repair or replace all reinforcing bars from which sample splices were removed before the Engineer selects additional splices from this lot for further testing.

52-1.08C(2)(b) Quality Assurance Test Requirements for Service Splices

- For the first production test performed, and for at least one, randomly selected by the Engineer, of every 5 subsequent production tests, or portion thereof, the Contractor shall concurrently prepare 4 additional service quality assurance sample splices. These service quality assurance sample splices shall be prepared in the same manner as specified herein for service production sample splices.
- These 4 additional quality assurance sample splices shall be shipped to the Transportation Laboratory for quality assurance testing. The 4 sample splices shall be securely bundled together and identified by location and contract number with weatherproof markings before shipment. Bundles containing fewer than 4 samples of splices will not be tested. Sample splices not accompanied by the supporting documentation required in Section 52-1.08B(1), for mechanical splices, or in Section 52-1.08B(3), for resistance butt welds, will not be tested.

• Quality assurance testing will be performed in conformance with the requirements for service production sample splices in Section 52-1.08C(2)(a), "Production Test Requirements for Service Splices."

52-1.08C(3) Ultimate Butt Splice Test Criteria

• Ultimate production and quality assurance sample splices shall be tensile tested in conformance with the requirements described in ASTM Designation: A 370 and California Test 670.

• A minimum of one control bar shall be removed from the same bar as, and adjacent to, all ultimate prequalification, production, and quality assurance sample splices. Control bars shall be 1) a minimum length of one meter for reinforcing bars No. 25 or smaller and 1.5 meters for reinforcing bars No. 29 or larger, and 2) suitably identified before shipment with weatherproof markings that do not interfere with the Engineer's tamper-proof markings or seals. The portion of adjacent bar remaining in the work shall also be identified with weatherproof markings that correspond to its adjacent control bar.

• Each sample splice and its associated control bar shall be identified and marked as a set. Each set shall be identified as representing a prequalification, production, or quality assurance sample splice.

• The portion of hoop reinforcing bar, removed to obtain a sample splice and control bar, shall be replaced using a prequalified ultimate mechanical butt splice, or the hoop shall be replaced in kind.

• Reinforcing bars, other than hoops, from which sample splices are removed, shall be repaired using ultimate mechanical butt splices conforming to the provisions in Section 52-1.08C(1), "Splice Prequalification Report," or the bars shall be replaced in kind. These bars shall be repaired or replaced such that no splices are located in any "No Splice Zone" shown on the plans.

• Ultimate production and quality assurance sample splices shall rupture in the reinforcing bar either: 1) outside of the affected zone or 2) within the affected zone, provided that the sample splice has achieved at least 95 percent of the ultimate tensile strength of the control bar associated with the sample splice. In addition, necking of the bar, as defined in California Test 670, shall be evident at rupture regardless of whether the bar breaks inside or outside the affected zone.

• The affected zone is the portion of the reinforcing bar where any properties of the bar, including the physical, metallurgical, or material characteristics, have been altered by fabrication or installation of the splice.

• The ultimate tensile strength shall be determined for all control bars by tensile testing the bars to rupture, regardless of where each sample splice ruptures. If 2 control bars are tested for one sample splice, the bar with the lower ultimate tensile strength shall be considered the control bar.

52-1.08C(3)(a) Production Test Requirements for Ultimate Butt Splices

• Production tests shall be performed for all ultimate butt splices used in the work. A production test shall consist of testing 4 sets of sample splices and control bars removed from each lot of completed splices, except when quality assurance tests are performed.

• After the splices in a lot have been completed, and the bars have been epoxy-coated when required, the QCM shall notify the Engineer in writing that the splices in this lot conform to the specifications and are ready for testing. Except for hoops, sample splices will be selected by the Engineer at the job site. Sample splices for hoops will be selected by the Engineer either at the job site or a fabrication facility.

• After notification has been received, the Engineer will randomly select the 4 sample splices to be removed from the lot and place tamper-proof markings or seals on them. The Contractor shall select the adjacent control bar for each sample splice bar, and the Engineer will place tamper-proof markings or seals on them. These ultimate production sample splices and control bars shall be removed by the Contractor, and tested by an independent qualified testing laboratory.

• At least one week before testing, the Contractor shall notify the Engineer in writing of the date when and the location where the testing of the samples will be performed.

• A sample splice or control bar from any set will be rejected if a tamper-proof marking or seal is disturbed before testing.

• The 4 sets from each production test shall be securely bundled together and identified with a completed sample identification card before shipment to the independent laboratory. The card will be furnished by the Engineer. Bundles of samples containing fewer than 4 sets of splices shall not be tested.

• Before performing any tensile tests on production test sample splices, one of the 4 sample splices shall be tested for, and shall conform to, the requirements for total slip. Should this sample splice not meet these requirements, one retest, in which the 3 remaining sample splices are tested for total slip, will be allowed. Should any of the 3 remaining sample splices not conform to these requirements, all splices in the lot represented by this production test will be rejected.

• If 3 or more sample splices from a production test conform to the provisions in Section 52-1.08C(3), "Ultimate Butt Splice Test Criteria," all splices in the lot represented by this production test will be considered acceptable.

• Should only 2 sample splices from a production test conform to the provisions in Section 52-1.08C(3), "Ultimate Butt Splice Test Criteria," one additional production test shall be performed on the same lot of splices. Should any of the 4 sample splices from this additional test fail to conform to these provisions, all splices in the lot represented by these production tests will be rejected.

• If only one sample splice from a production test conforms to the provisions in Section 52-1.08C(3), "Ultimate Butt Splice Test Criteria," all splices in the lot represented by this production test will be rejected.

• If a production test for a lot fails, the Contractor shall repair or replace all reinforcing bars from which sample splices were removed, complete in place, before the Engineer selects additional splices from this lot for further testing.

• Production tests will not be required on repaired splices from a lot, regardless of the type of prequalified ultimate mechanical butt splice used to make the repair. However, should an additional production test be required, the Engineer may select any repaired splice for the additional production test.

52-1.08C(3)(b) Quality Assurance Test Requirements for Ultimate Butt Splices

• For the first production test performed, and for at least one, randomly selected by the Engineer, of every 5 subsequent production tests, or portion thereof, the Contractor shall concurrently prepare 4 additional ultimate quality assurance sample splices along with associated control bars.

• Each time 4 additional ultimate quality assurance sample splices are prepared, 2 of these quality assurance sample splice and associated control bar sets and 2 of the production sample splice and associated control bar sets, together, shall conform to the requirements for ultimate production sample splices in Section 52-1.08C(3)(a),"Production Test Requirements for Ultimate Butt Splices."

- The 2 remaining quality assurance sample splice and associated control bar sets, along with the 2 remaining production sample splice and associated control bar sets shall be shipped to the Transportation Laboratory for quality assurance testing. The 4 sets shall be securely bundled together and identified by location and contract number with weatherproof markings before shipment. Bundles containing fewer than 4 sets will not be tested.
- Quality assurance testing will be performed in conformance with the requirements for ultimate production sample splices in Section 52-1.08C(3)(a), "Production Test Requirements for Ultimate Butt Splices."

52-1.08C(3)(c) Nondestructive Splice Tests

- When the specifications allow for welded sample splices to be taken from other than the completed lot of splices, the Contractor shall meet the following additional requirements.
- Except for resistance butt welded splices, radiographic examinations shall be performed on 25 percent of all complete joint penetration butt welded splices from a production lot. The size of a production lot will be a maximum of 150 splices. The Engineer will select the splices which will compose the production lot and also the splices within each production lot to be radiographically examined.
- All required radiographic examinations of complete joint penetration butt welded splices shall be performed by the Contractor in conformance with the requirements in AWS D 1.4 and these specifications.
- Before radiographic examination, welds shall conform to the requirements in Section 4.4, "Quality of Welds," of AWS D 1.4.
- Should more than 12 percent of the splices which have been radiographically examined in any production lot be defective, an additional 25 percent of the splices, selected by the Engineer from the same production lot, shall be radiographically examined. Should more than 12 percent of the cumulative total of splices tested from the same production lot be defective, all remaining splices in the lot shall be radiographically examined.
- Additional radiographic examinations performed due to the identification of defective splices shall be at the Contractor's expense.
- All defects shall be repaired in conformance with the requirements in AWS D 1.4.
- The Contractor shall notify the Engineer in writing 48 hours before performing any radiographic examinations.
- The radiographic procedure used shall conform to the requirements in AWS D1.1, AWS D1.4, and the following:

A. Two exposures shall be made for each complete joint penetration butt welded splice. For each of the 2 exposures, the radiation source shall be centered on each bar to be radiographed. The first exposure shall be made with the radiation source placed at zero degrees from the top of the weld and perpendicular to the weld root and identified with a station mark of "0." The second exposure shall be at 90 degrees to the "0" station mark and shall be identified with a station mark of "90." When obstructions prevent a 90 degree placement of the radiation source for the second exposure, and when approved in writing by the Engineer, the source may be rotated, around the centerline of the reinforcing bar, a maximum of 25 degrees.

B. For field produced complete joint penetration butt welds, no more than one weld shall be radiographed during one exposure. For shop produced complete joint penetration butt welds, if more than one weld is to be radiographed during one exposure, the angle between the root line of each weld and the direction to the radiation source shall be not less than 65 degrees.

C. Radiographs shall be made by either X-ray or gamma ray. Radiographs made by X-ray or gamma rays shall have densities of not less than 2.3 nor more than 3.5 in the area of interest. A tolerance of 0.05 in density is allowed for densitometer variations. Gamma rays shall be from the iridium 192 isotope and the emitting specimen shall not exceed 4.45 mm in the greatest diagonal dimension.

D. The radiographic film shall be placed perpendicular to the radiation source at all times; parallel to the root line of the weld unless source placement determines that the film must be turned; and as close to the root of the weld as possible.

E. The minimum source to film distance shall be maintained so as to ensure that all radiographs maintain a maximum geometric unsharpness of 0.020 at all times, regardless of the size of the reinforcing bars.

F. Penetrameters shall be placed on the source side of the bar and perpendicular to the radiation source at all times. One penetrameter shall be placed in the center of each bar to be radiographed, perpendicular to the weld root, and adjacent to the weld. Penetrameter images shall not appear in the weld area.

G. When radiography of more than one weld is being performed per exposure, each exposure shall have a minimum of one penetrameter per bar, or 3 penetrameters per exposure. When 3 penetrameters per exposure are used, one penetrameter shall be placed on each of the 2 outermost bars of the exposure, and the remaining penetrameter shall be placed on a centrally located bar.

H. An allowable weld buildup of 4 mm may be added to the total material thickness when determining the proper penetrameter selection. No image quality indicator equivalency will be accepted. Wire penetrameters or penetrameter blocks shall not be used.

I. Penetrameters shall be sufficiently shimmed using a radiographically identical material. Penetrameter image densities shall be a minimum of 2.0 and a maximum of 3.6.

J. Radiographic film shall be Class 1, regardless of the size of reinforcing bars.

K. Radiographs shall be free of film artifacts and processing defects, including, but not limited to, streaks, scratches, pressure marks or marks made for the purpose of identifying film or welding indications.

L. Each splice shall be clearly identified on each radiograph and the radiograph identification and marking system shall be established between the Contractor and the Engineer before radiographic inspection begins. Film shall be identified by lead numbers only; etching, flashing or writing in identifications of any type will not be permitted. Each piece of film identification information shall be legible and shall include, as a minimum, the following information: Contractor's name, date, name of nondestructive testing firm, initials of radiographer, contract number, part number and weld number. The letter "R" and repair number shall be placed directly after the weld number to designate a radiograph of a repaired weld.

M. Radiographic film shall be developed within a time range of one minute less to one minute more than the film manufacturer's recommended maximum development time. Sight development will not be allowed.

N. Processing chemistry shall be done with a consistent mixture and quality, and processing rinses and tanks shall be clean to ensure proper results. Records of all developing processes and any chemical changes to the developing processes shall be kept and furnished to the Engineer upon request. The Engineer may request, at any time, that a sheet of unexposed film be processed in the presence of the Engineer to verify processing chemical and rinse quality.

O. The results of all radiographic interpretations shall be recorded on a signed certification and a copy kept with the film packet.

P. Technique sheets prepared in conformance with the requirements in ASME Boiler and Pressure Vessels Code, Section V, Article 2 Section T-291 shall also contain the developer temperature, developing time, fixing duration and all rinse times.

52-1.08D Reporting Test Results

• A Production Test Report for all testing performed on each lot shall be prepared by the independent testing laboratory performing the testing and submitted to the QCM for review and approval. The report shall be signed by an engineer who represents the laboratory and is registered as a Civil Engineer in the State of California. The report shall include, as a minimum, the following information for each test: contract number, bridge number, lot number and location, bar size, type of splice, length of mechanical splice, length of test specimen, physical condition of test sample splice and any associated control bar, any notable defects, total measured slip, ultimate tensile strength of each splice, and for ultimate butt splices, limits of affected zone, location of visible necking area, ultimate tensile strength and 95 percent of this ultimate tensile strength for each control bar, and a comparison between 95 percent of the ultimate tensile strength of each control bar and the ultimate tensile strength of its associated splice.

• The QCM must review, approve, and forward each Production Test Report to the Engineer for review before the splices represented by the report are encased in concrete. The Engineer will have 3 working days to review each Production Test Report and respond in writing after a complete report has been received. Should the Contractor elect to encase any splices before receiving notification from the Engineer, it is expressly understood that the Contractor will not be relieved of the responsibility for incorporating material in the work that conforms to the requirements of the plans and specifications. Material not conforming to these requirements will be subject to rejection. Should the Contractor elect to wait to encase splices pending notification by the Engineer, and in the event the Engineer fails to complete the review and provide notification within the time allowed, and if, in the opinion of the Engineer, the work is delayed or interfered with by reason of the Engineer's delay in completing the review, the Contractor will be compensated for any resulting loss, and an extension of time will be granted, in the same manner as provided for in Section 8-1.09, "Right of Way Delays."

• Quality assurance test results for each bundle of 4 sets or 4 samples of splices will be reported in writing to the Contractor within 3 working days after receipt of the bundle by the Transportation Laboratory. In the event that more than one bundle is received on the same day, 2 additional working days shall be allowed for providing test results for each additional bundle received. A test report will be made for each bundle received. Should the Contractor elect to encase splices before receiving notification from the Engineer, it is expressly understood that the Contractor will not be relieved of the responsibility for incorporating material in the work that conforms to the requirements of the plans and specifications. Material not conforming to these requirements will be subject to rejection. Should the Contractor elect to wait to encase splices pending notification by the Engineer, and in the event the Engineer fails to complete the review within the time allowed, and in the opinion of the Engineer, completion of the work is delayed or interfered with by reason of the Engineer's delay in completing the review, the Contractor will be compensated for any resulting loss, and an extension of time will be granted, in the same manner as provided for in Section 8-1.09, "Right of Way Delays."

Section 52-1.11, "Payment," of the Standard Specifications is amended by adding the following paragraph after the seventh paragraph:

• If a portion or all of the reinforcing steel is epoxy-coated more than 480 air line kilometers from both Sacramento and Los Angeles, additional shop inspection expenses will be sustained by the State. Whereas it is and will be impracticable and extremely difficult to ascertain and determine the actual increase in these expenses, it is agreed that payment to the Contractor for furnishing the epoxy-coated reinforcement will be reduced $5000 for each epoxy-coating facility located more than 480 air line kilometers from both Sacramento and Los Angeles and an additional $3000 ($8000 total) for each epoxy-coating facility located more than 4800 air line kilometers from both Sacramento and Los Angeles.

SECTION 53: SHOTCRETE

Issue Date: January 5, 2007

The third paragraph in Section 53-1.01, "Description," of the Standard Specifications is amended to read:

• The dry-mix process shall consist of delivering dry mixed aggregate and cementitious material pneumatically or mechanically to the nozzle body and adding water and mixing the materials in the nozzle body. The wet-mix process shall consist of delivering mixed aggregate, cement, and water pneumatically to the nozzle and adding any admixture at the nozzle.

The first through fourth paragraphs in Section 53-1.02, "Materials," of the Standard Specifications is amended to read:

• Cementitious material, fine aggregate, and mixing water shall conform to the provisions in Section 90, "Portland Cement Concrete."
• Shotcrete to be mixed and applied by the dry-mix process shall consist of one part cementitious material to not more than 4.5 parts fine aggregate, thoroughly mixed in a dry state before being charged into the machine. Measurement may be either by volume or by mass. The fine aggregate shall contain not more than 6 percent moisture by mass.
• Shotcrete to be mixed and applied by the wet-mix process shall consist of cementitious material, fine aggregate, and water and shall contain not less than 375 kilograms of cementitious material per cubic meter. A maximum of 30 percent pea gravel may be substituted for fine aggregate. The maximum size of pea gravel shall be such that 100 percent passes the 12.5 mm screen and at least 90 percent passes the 9.5 mm screen.
• Admixtures may be added to shotcrete and shall conform to the provisions in Section 90-4, "Admixtures."

The third subparagraph of the third paragraph in Section 53-1.04, "Placing Shotcrete," of the Standard Specifications is amended to read:

Aggregate and cementitious material that have been mixed for more than 45 minutes shall not be used unless otherwise permitted by the Engineer.

SECTION 55: STEEL STRUCTURES

Issue Date: January 5, 2007

The third and fourth paragraphs of Section 55-1.01, "Description," of the Standard Specifications are amended to read:

• Details of connections for highway bridges selected for use by the Contractor shall conform to the AASHTO LRFD Bridge Design Specifications with Caltrans Amendments.

• Details of design selected by the Contractor, fabrication and workmanship, for steel railway bridges shall conform to the requirements of the Specifications for Steel Railway Bridges, for Fixed Spans Not Exceeding 400 Feet in Length of the AREMA, as set forth in the special provisions.

The third paragraph of Section 55-1.05, "Falsework," of the Standard Specifications is amended to read:

• Construction methods and equipment employed by the Contractor shall conform to the provisions in Section 7-1.02, "Load Limitations." Loads imposed on existing, new or partially completed structures shall not exceed the load carrying capacity of the structure, or portion of structure, as determined by the AASHTO LRFD Bridge Design Specifications with Caltrans Amendments.

The fourth and fifth paragraphs of Section 55-2.01, "Description," of the Standard Specifications are amended to read:

• All structural steel plate used for the fabrication of tension members, tension flanges, eyebars and hanger plates and for splice plates of tension members, tension flanges and eyebars shall meet the longitudinal Charpy V-notch impact value requirements specified herein. Sampling procedures shall conform to the requirements in ASTM Designation: A 673. The H (Heat) frequency of testing shall be used for structural steels conforming to the requirements in ASTM Designations: A 709/A 709M, Grades 36 [250], 50 [345], 50W [345W], and HPS 50W [345W]. The P (Piece) frequency of testing shall be used for structural steel conforming to the requirements in ASTM Designation: A 709/A 709M, Grades HPS 70W [485W], 100 [690], and 100W [690W]. Charpy V-notch impact values shall be determined in conformance with the requirements in ASTM Designation: E 23.

• Charpy V-notch (CVN) impact values shall conform to the following minimum values for non fracture critical members:

Material Conforming to ASTM Designation: A 709/A 709M	CVN Impact Value (Joules at Temp.)
Grade 36 [250]	20 at 4°C
Grade 50 [345]* (50 mm and under in thickness)	20 at 4°C
Grade 50W [345W]* (50 mm and under in thickness)	20 at 4°C
Grade 50 [345]* (Over 50 mm to 100 mm in thickness)	27 at 4°C
Grade 50W [345W]* (Over 50 mm to 100 mm in thickness)	27 at 4°C
Grade HPS 50W [345W]* (100 mm and under in thickness)	27 at -12°C
Grade HPS 70W [485]* (100 mm and under in thickness)	34 at -23°C
Grade 100 [490] (65 mm and under in thickness)	34 at -18°C
Grade 100W [490W] (Over 65 mm to 100 mm in thickness)	48 at -18°C

* If the yield point of the material exceeds 450 MPa, the temperature for the CVN impact value for acceptability shall be reduced 8°C for each increment of 70 MPa above 450 MPa.

Structural Steel Materials

Material	Specification
Structural steel:	
Carbon steel	ASTM: A 709/A 709M, Grade 36 [250] or {A 36/A 36M}a
High strength low alloy columbium vanadium steel	ASTM: A 709/A 709M, Grade 50 [345]or {A 572/A 572M, Grade 50 [345]}a
High strength low alloy structural steel	ASTM: A 709/A 709M, Grade 50W [345W], Grade HPS 50W [HSP 345W], or {A 588/A 588M}a
High strength low alloy structural steel plate	ASTM: A 709/A 709M, Grade HPS 70W [HPS 485W]
High-yield strength, quenched and tempered alloy steel plate suitable for welding	ASTM: A 709/A 709M, Grade 100 [690] and Grade 100W [690W], or {A 514/A 514M}a
Steel fastener components for general applications:	
Bolts and studs	ASTM: A 307
Headed anchor bolts	ASTM: A 307, Grade B, including S1 supplementary requirements
Nonheaded anchor bolts	ASTM: A 307, Grade C, including S1 supplementary requirements and S1.6 of AASHTO: M 314 supplementary requirements or AASHTO: M 314, Grade 36 or 55, including S1 supplementary requirements
High-strength bolts and studs	ASTM: A 449, Type 1
High-strength threaded rods	ASTM: A 449, Type 1
High-strength nonheaded anchor bolts	ASTM: A 449, Type 1
Nuts	ASTM: A 563, including Appendix X1b
Washers	ASTM: F 844

Components of high-strength steel fastener assemblies for use in structural steel joints:	
Bolts	ASTM: A 325, Type 1
Tension control bolts	ASTM: F 1852, Type 1
Nuts	ASTM: A 563, including Appendix X1b
Hardened washers	ASTM : F 436, Type 1, Circular, including S1 supplementary requirements
Direct tension indicators	ASTM: F 959, Type 325, zinc-coated
Carbon steel for forgings, pins and rollers	ASTM: A 668/A 668M, Class D
Alloy steel for forgings	ASTM: A 668/A 668M, Class G
Pin nuts	ASTM: A 36/A 36M
Carbon-steel castings	ASTM: A 27/A 27M, Grade 65-35, Class 1
Malleable iron castings	ASTM: A 47, Grade 32510 or A 47M, Grade 22010
Gray iron castings	ASTM: A 48, Class 30B
Carbon steel structural tubing	ASTM: A 500, Grade B or A 501
Steel pipe (Hydrostatic testing will not apply)	ASTM: A 53, Type E or S, Grade B; A 106, Grade B; or A 139, Grade B
Stud connectors	ASTM: A 108 and AASHTO/AWS D1.5

a Grades that may be substituted for the equivalent ASTM Designation: A 709 steel, at the Contractor's option, subject to the modifications and additions specified and to the requirements of A 709.

b Zinc-coated nuts that will be tightened beyond snug or wrench tight shall be furnished with a dry lubricant conforming to Supplementary Requirement S2 in ASTM Designation: A 563.

The first sentence of the first paragraph of Section 55-2.02, "Structural Steel," of the Standard Specifications is amended to read:

• Unless otherwise specified or shown on the plans, all structural steel plates, shapes, and bars shall conform to ASTM Designation: A 709/A 709M, Grade 50 [345].

The first paragraph in Section 55-3.05, "Flatness of Faying and Bearing Surfaces," of the Standard Specifications is amended to read:

• Surfaces of bearing and base plates and other metal surfaces that are to come in contact with each other or with ground concrete surfaces or with asbestos sheet packing shall be flat to within one mm tolerance in 305 mm and to within 2 mm tolerance overall. Surfaces of bearing and base plates and other metal bearing surfaces that are to come in contact with preformed fabric pads, elastomeric bearing pads, or mortar shall be flat to within 3 mm tolerance in 305 mm and to within 5 mm tolerance overall.

Section 55-3.14, "Bolted Connections," of the Standard Specifications is amended by adding the following after the ninth paragraph:

• If a torque multiplier is used in conjunction with a calibrated wrench as a method for tightening fastener assemblies to the required tension, both the multiplier and the wrench shall be calibrated together as a system. The same length input and output sockets and extensions that will be used in the work shall also be included in the calibration of the system. The manufacturer's torque multiplication ratio shall be adjusted during calibration of the system, such

that when this adjusted ratio is multiplied by the actual input calibrated wrench reading, the product is a calculated output torque that is within 2 percent of the true output torque. When this system is used in the work to perform any installation tension testing, rotational capacity testing, fastener tightening, or tension verification, it shall be used, intact as calibrated.

The second paragraph of Section 55-3.17, "Welding," of the Standard Specifications is amended to read:

• The minimum size of all fillet welds, except those to reinforce groove welds, shall be as shown in the following table:

Base Metal Thickness of the Thicker Part Joined (Millimeters)	*Minimum Size of Fillet Weld (Millimeters)
To 19 inclusive	6
Over 19	8

* Except that the weld size need not exceed the thickness of the thinner part joined.

The third paragraph in Section 55-3.19, "Bearings and Anchorages," of the Standard Specifications is amended to read:

• Immediately before setting bearing assemblies or masonry plates directly on ground concrete surfaces, the Contractor shall thoroughly clean the surfaces of the concrete and the metal to be in contact and shall apply a coating of nonsag polysulfide or polyurethane caulking conforming to the requirements in ASTM Designation: C 920 to contact areas to provide full bedding.

The fifth paragraph in Section 55-3.19, "Bearings and Anchorages," of the Standard Specifications is amended to read:

• Mortar to be placed below masonry plates or bearing plates of the bearing assemblies and in anchor bolt sleeves or canisters shall conform to the provisions in Section 51-1.135, "Mortar," except that the proportion of cementitious material to sand shall be 1:3.

The sixth paragraph of Section 55-4.02, "Payment," of the Standard Specifications is amended to read:

• If a portion or all of the structural steel is fabricated more than 480 air line kilometers from both Sacramento and Los Angeles, additional shop inspection expenses will be sustained by the State. Whereas it is and will be impracticable and extremely difficult to ascertain and determine the actual increase in these expenses, it is agreed that payment to the Contractor for furnishing the structural steel from each fabrication site located more than 480 air line kilometers from both Sacramento and Los Angeles will be reduced $5000 or by an amount computed at $0.044 per kilogram of structural steel fabricated, whichever is greater, or in the case of each fabrication site located more than 4800 air line kilometers from both Sacramento and Los Angeles, payment will be reduced $8000 or by $0.079 per kilogram of structural steel fabricated, whichever is greater.

SECTION 56: SIGNS

Issue Date: March 16, 2007

Section 56-1.01, "Description," of the Standard Specifications is amended by deleting the third paragraph.

Section 56-1.02A, "Bars, Plates and Shapes," of the Standard Specifications is amended to read:

56-1.02A Bars, Plates, Shapes, and Structural Tubing

• Bars, plates, and shapes shall be structural steel conforming to the requirements in ASTM Designation: A 36/A 36M, except, at the option of the Contractor, the light fixture mounting channel shall be continuous-slot steel channel conforming to the requirements in ASTM Designation: A 1011/A 1011M, Designation SS, Grade 33[230], or aluminum Alloy 6063-T6 extruded aluminum conforming to the requirements in ASTM Designation: B 221 or B 221M.

• Structural tubing shall be structural steel conforming to the requirements in ASTM Designation: A 500, Grade B.

• Removable sign panel frames shall be constructed of structural steel conforming to the requirements in ASTM Designation: A 36/A 36M.

Section 56-1.02B, "Sheets," of the Standard Specifications is amended to read:

56-1.02B Sheets

• Sheets shall be carbon-steel sheets conforming to the requirements in ASTM Designation: A 1011/A 1011M, Designation SS, Grade 33[230].

• Ribbed sheet metal for box beam-closed truss sign structures shall be fabricated from galvanized sheet steel conforming to the requirements in ASTM Designation: A 653/A 653M, Designation SS, Grade 33[230]. Sheet metal panels shall be G 165 coating designation in conformance with the requirements in ASTM Designation: A 653/A 653M.

Section 56-1.02F, "Steel Walkway Gratings," of the Standard Specifications is amended to read:

56-1.02F Steel Walkway Gratings

• Steel walkway gratings shall be furnished and installed in conformance with the details shown on the plans and the following provisions:

A. Gratings shall be the standard product of an established grating manufacturer.
B. Material for gratings shall be structural steel conforming to the requirements in ASTM Designation: A 1011/A 1011M, Designation CS, Type B.
C. For welded type gratings, each joint shall be full resistance welded under pressure, to provide a sound, completely beaded joint.
D. For mechanically locked gratings, the method of fabrication and interlocking of the members shall be approved by the Engineer, and the fabricated grating shall be equal in strength to the welded type.
E. Gratings shall be accurately fabricated and free from warps, twists, or other defects affecting their appearance or serviceability. Ends of all rectangular panels shall be square. The tops of the bearing bars and cross members shall be in the same plane. Gratings distorted by the galvanizing process shall be straightened.

The fifth paragraph in Section 56-1.03, "Fabrication," of the Standard Specifications is amended to read:

• Clips, eyes, or removable brackets shall be affixed to all signs and all posts and shall be used to secure the sign during shipping and for lifting and moving during erection as necessary to prevent damage to the finished galvanized or painted surfaces. Brackets on tubular sign structures shall be removed after erection. Details of the devices shall be shown on the working drawings.

The sixth through the thirteenth paragraphs in Section 56-1.03, "Fabrication," of the Standard Specifications are amended to read:

• High-strength bolted connections, where shown on the plans, shall conform to the provisions in Section 55-3.14, "Bolted Connections," except that only fastener assemblies consisting of a high-strength bolt, nut, hardened washer, and direct tension indicator shall be used.

• High-strength fastener assemblies, and any other bolts, nuts, and washers attached to sign structures shall be zinc-coated by the mechanical deposition process.

• Nuts for high-strength bolts designated as snug-tight shall not be lubricated.

• An alternating snugging and tensioning pattern for anchor bolts and high-strength bolted splices shall be used. Once tensioned, high-strength fastener components and direct tension indicators shall not be reused.

• For bolt diameters less than 10 mm, the diameter of the bolt hole shall be not more than 0.80-mm larger than the nominal bolt diameter. For bolt diameters greater than or equal to 10 mm, the diameter of the bolt hole shall be not more than 1.6 mm larger than the nominal bolt diameter.

• Sign structures shall be fabricated into the largest practical sections prior to galvanizing.

• Ribbed sheet metal panels for box beam closed truss sign structures shall be fastened to the truss members by cap screws or bolts as shown on the plans, or by 4.76 mm stainless steel blind rivets conforming to Industrial Fasteners Institute, Standard IFI-114, Grade 51. The outside diameter of the large flange rivet head shall be not less than 15.88 mm in diameter. Web splices in ribbed sheet metal panels may be made with similar type blind rivets of a size suitable for the thickness of material being connected.

• Spalling or chipping of concrete structures shall be repaired by the Contractor at the Contractor's expense.

• Overhead sign supports shall have an aluminum identification plate permanently attached near the base, adjacent to the traffic side on one of the vertical posts, using either stainless steel rivets or stainless steel screws. As a minimum, the information on the plate shall include the name of the manufacturer, the date of manufacture and the contract number.

The fourth paragraph of Section 56-1.10, "Payment," of the Standard Specifications is amended to read:

• The contract price paid per kilogram for install sign structure of the type or types designated in the Engineer's Estimate shall include full compensation for furnishing all labor, materials, tools, equipment and incidentals, and for doing all the work involved in installing sign structures, complete in place, including installing anchor bolt assemblies, removable sign panel frames, and sign panels and performing any welding, painting or galvanizing required during

installation, as shown on the plans, as specified in these specifications and the special provisions, and as directed by the Engineer.

The fifth paragraph of Section 56-2.02B, "Wood Posts," of the Standard Specifications is amended to read:

• Douglas fir and Hem-Fir posts shall be treated in conformance with the provisions in Section 58, "Preservative Treatment of Lumber, Timber and Piling," and in conformance with AWPA Use Category System: UC4A, Commodity Specification A. Posts shall be incised and the minimum retention of preservative shall be as specified in AWPA Standards.

The fourth paragraph in Section 56-2.03, "Construction," of the Standard Specifications is amended to read:

• Backfill material for metal posts shall consist of minor concrete conforming to the provisions in Section 90-10, "Minor Concrete," and shall contain not less than 275 kilograms of cementitious material per cubic meter.

SECTION 57: TIMBER STRUCTURES

Issue Date: October 12, 2004

The second paragraph of Section 57-1.02A, "Structural Timber and Lumber," of the Standard Specifications is amended to read:

• When preservative treatment of timber and lumber is required, the treatment shall conform to the provisions in Section 58, "Preservative Treatment of Lumber, Timber and Piling," and AWPA's Use Category 4B. The type of treatment to be used will be shown on the plans or specified in the special provisions.

SECTION 58: PRESERVATIVE TREATMENT OF LUMBER, TIMBER AND PILING

Issue Date: November 18, 2005

The first paragraph of Section 58-1.02, "Treatment and Retention," of the Standard Specifications is amended to read:

• Timber, lumber, and piling shall be pressure treated after millwork is completed. Preservatives, treatment, and results of treatment shall conform to the requirements in AWPA Standards U1 and T1. Treatment of lumber and timber shall conform to the specified AWPA Use Category cited in the special provisions, on the plans, or elsewhere in these specifications.

The second paragraph of Section 58-1.02, "Treatment and Retention," of the Standard Specifications is deleted.

SECTION 59: PAINTING

Issue Date: January 19, 2007

The first paragraph of Section 59-1.02, "Weather Conditions," of the Standard Specifications is amended to read:

• Paint shall be applied only on thoroughly dry surfaces and during periods of favorable weather. Blast cleaning or application of solvent-borne paint will not be permitted when the atmospheric or surface temperature is at or below 2°C or above 38°C, or when the relative humidity exceeds 85 percent at the site of the work. Application of water-borne paint will not be permitted when the atmospheric or surface temperature is at or below 10°C, or above 38°C, or when the relative humidity exceeds 75 percent at the site of the work. Application of paint will not be permitted when the steel surface temperature is less than 3°C above the dew point, or when freshly painted surfaces may become damaged by rain, fog or condensation, or when it can be anticipated that the atmospheric temperature or relative humidity will not remain within the specified application conditions during the drying period, except as provided in the following paragraph for enclosures. If uncured paint is damaged by the elements, it shall be replaced or repaired by the Contractor at the Contractor's expense.

The second paragraph of Section 59-1.05, "Protection Against Damage," of the Standard Specifications is amended to read:

• Paint or paint stains on surfaces not designated to be painted shall be removed by the Contractor at the Contractor's expense and to the satisfaction of the Engineer.

Section 59-2.01, "General," of the Standard Specifications is amended by adding the following paragraphs after the first paragraph:

• Unless otherwise specified, no painting Contractors or subcontractors will be permitted to commence work without having the following current "SSPC: The Society for Protective Coatings" (formerly the Steel Structures Painting Council) certifications in good standing:

A. For cleaning and painting structural steel in the field, certification in conformance with the requirements in Qualification Procedure No. 1, "Standard Procedure For Evaluating Painting Contractors (Field Application to Complex Industrial Structures)" (SSPC-QP 1).
B. For removing paint from structural steel, certification in conformance with the requirements in Qualification Procedure No. 2, "Standard Procedure For Evaluating Painting Contractors (Field Removal of Hazardous Coatings from Complex Structures)" (SSPC-QP 2).
C. For cleaning and painting structural steel in a permanent painting facility, certification in conformance with the requirements in Qualification Procedure No. 3, "Standard Procedure For Evaluating Qualifications of Shop Painting Applicators" (SSPC-QP 3). The AISC's Sophisticated Paint Endorsement (SPE) quality program will be considered equivalent to SSPC-QP 3.

The third paragraph of Section 59-2.03, "Blast Cleaning," of the Standard Specifications is amended to read:

• Exposed steel or other metal surfaces to be blast cleaned shall be cleaned in conformance with the requirements in Surface Preparation Specification No. 6, "Commercial Blast Cleaning," of the "SSPC: The Society for Protective Coatings." Blast cleaning shall leave all surfaces with

a dense, uniform, angular anchor pattern of not less than 35 µm as measured in conformance with the requirements in ASTM Designation: D 4417.

The first paragraph of Section 59-2.06, "Hand Cleaning," of the Standard Specifications is amended to read:

• Dirt, loose rust and mill scale, or paint which is not firmly bonded to the surfaces shall be removed in conformance with the requirements in Surface Preparation Specification No. 2, "Hand Tool Cleaning," of the "SSPC: The Society for Protective Coatings." Edges of old remaining paint shall be feathered.

The third and fourth paragraphs of Section 59-2.12, "Painting," of the Standard Specifications are amended to read:

• Contact surfaces of stiffeners, railings, built up members or open seam exceeding 6 mils in width that would retain moisture, shall be caulked with polysulfide or polyurethane sealing compound conforming to the requirements in ASTM Designation: C 920, Type S, Grade NS, Class 25, Use O, or other approved material.

• The dry film thickness of the paint will be measured in place with a calibrated Type 2 magnetic film thickness gage in conformance with the requirements in SSPC-PA 2, "Measurement of Dry Coating Thickness with Magnetic Gages," of the "SSPC: The Society for Protective Coatings," except that there shall be no limit to the number or location of spot measurements to verify compliance with specified thickness requirements.

The third paragraph of Section 59-2.13, "Application of Zinc-Rich Primer," of the Standard Specifications is amended to read:

• Mechanical mixers shall be used in mixing the primer. After mixing, the zinc-rich primer shall be strained through a 0.6 to 0.25 mm screen or a double layer of cheesecloth immediately prior to or during pouring into the spray pot.

SECTION 64: PLASTIC PIPE

Issue Date: January 5, 2007

The first paragraph of Section 64-1.06, "Concrete Backfill," of the Standard Specifications is amended to read:

• At locations where pipe is to be backfilled with concrete as shown on the plans, the concrete backfill shall be constructed of minor concrete or Class 4 concrete conforming to the provisions in Section 90, "Portland Cement Concrete." Minor concrete shall contain not less than 250 kg of cementitious material per cubic meter. The concrete to be used will be designated in the contract item or shown on the plans.

SECTION 65: REINFORCED CONCRETE PIPE

Issue Date: January 5, 2007

The first paragraph of Section 65-1.02, "Materials," of the Standard Specifications is amended to read:

• Cementitious material and aggregate shall conform to the provisions in Section 90-2, "Materials," except that mortar strengths relative to Ottawa sand and grading requirements shall not apply to the aggregate. Use of supplemental cementitious material shall conform to AASHTO Designation: M 170M.

Subparagraph "c" of the eleventh paragraph of Section 65-1.02A(1) "Circular Reinforced Concrete Pipe (Designated or Selected by Class)," of the Standard Specifications is amended to read:

c. Cementitious material and aggregate for non-reinforced concrete pipe shall conform to the provisions in Section 65-1.02, "Materials."

The first paragraph of Section 65-1.035, "Concrete Backfill," of the Standard Specifications is amended to read:

• At locations where pipe is to be backfilled with concrete as shown on the plans, the concrete backfill shall be constructed of minor concrete or Class 4 concrete in conformance with the provisions in Section 90, "Portland Cement Concrete." Minor concrete shall contain not less than 225 kg of cementitious material per cubic meter. The concrete to be used will be designated in the contract item.

The first subparagraph of the second paragraph of Section 65-1.06, "Joints," of the Standard Specifications is amended to read:

• Cement Mortar.- Mortar shall be composed of one part cementitious material and 2 parts sand by volume. Supplementary cementitious material will not be required.

SECTION 66: CORRUGATED METAL PIPE

Issue Date: January 5, 2007

The first paragraph of Section 66-1.045, "Concrete Backfill," of the Standard Specifications is amended to read:

• At locations where pipe is to be backfilled with concrete as shown on the plans, the concrete backfill shall be constructed of minor concrete or Class 4 concrete conforming to the provisions in Section 90, "Portland Cement Concrete." Minor concrete shall contain not less than 225 kg of cementitious material per cubic meter. The concrete to be used will be designated in the contract item or shown on the plans.

SECTION 68: SUBSURFACE DRAINS

Issue Date: January 5, 2007

The first and second paragraphs of Section 68-3.02D, "Miscellaneous," of the Standard Specifications are amended to read:

• Concrete for splash pads shall be produced from minor concrete conforming to the provisions in Section 90-10, "Minor Concrete." Minor concrete shall contain not less than 275 kg of cementitious material per cubic meter.

• Mortar placed where edge drain outlets and vents connect to drainage pipe and existing drainage inlets shall conform to the provisions in Section 51-1.135, "Mortar."

SECTION 70: MISCELLANEOUS FACILITIES

Issue Date: January 5, 2007

The second paragraph of Section 70-1.02C, "Flared End Sections," of the Standard Specifications is amended to read:

• Precast concrete flared end sections shall conform to the requirements for Class III Reinforced Concrete Pipe in AASHTO Designation: M 170M. Cementitious materials and aggregate shall conform to the provisions in Section 90-2, "Materials," except that mortar strengths relative to Ottawa sand and grading requirements shall not apply to the aggregate. Use of supplementary cementitious material shall conform to the requirements in AASHTO Designation: M 170M. The area of steel reinforcement per meter of flared end section shall be at least equal to the minimum steel requirements for circular reinforcement in circular pipe for the internal diameter of the circular portion of the flared end section. The basis of acceptance of the precast concrete flared end section shall conform to the requirements of Section 5.1.2 of AASHTO Designation: M 170M.

The first paragraph of Section 70-1.02H, "Precast Concrete Structures," of the Standard Specifications is amended to read:

• Precast concrete pipe risers and pipe reducers, and precast concrete pipe sections, adjustment rings and tapered sections for pipe energy dissipators, pipe inlets and pipe manholes shall conform to the requirements in AASHTO Designation: M 199M, except that the cementitious material and aggregate shall conform to the provisions in Section 90-2, "Materials," except that mortar strengths relative to Ottawa sand and grading requirements shall not apply to the aggregate. Use of supplementary cementitious material shall conform to the requirements in AASHTO Designation: M 170M.

The second paragraph of Section 70-1.03, "Installation," of the Standard Specifications is amended to read:

• Cutoff walls for precast concrete flared end sections shall be constructed of minor concrete conforming to the provisions in Section 90-10, "Minor Concrete." Minor concrete shall contain not less than 275 kg of cementitious material per cubic meter.

SECTION 72: SLOPE PROTECTION

Issue Date: November 18, 2005

The sixth paragraph of Section 72-4.04, "Construction," of the Standard Specifications is amended to read:

• Pervious backfill material, if required by the plans, shall be placed as shown. A securely tied sack containing 0.03-m^3 of pervious backfill material shall be placed at each weep hole and drain hole. The sack material shall conform to the provisions in Section 88-1.03, "Filter Fabric."

SECTION 73: CONCRETE CURBS AND SIDEWALKS

Issue Date: January 5, 2007

The second subparagraph of the second paragraph of Section 73-1.01, "Description," of the Standard Specifications is amended to read:

2. Minor concrete shall contain not less than 275 kg of cementitious material per cubic meter except that when extruded or slip-formed curbs are constructed using 9.5-mm maximum size aggregate, minor concrete shall contain not less than 325 kg of cementitious material per cubic meter.

SECTION 75: MISCELLANEOUS METAL

Issue Date: August 17, 2007

The table in the tenth paragraph of Section 75-1.02, "Miscellaneous Iron and Steel," of the Standard Specifications is amended to read:

Material	Specification
Steel bars, plates and shapes	ASTM Designation: A 36/A 36M or A 575, A 576 (AISI or M Grades 1016 through 1030)
Steel fastener components for general applications:	
Bolts and studs	ASTM Designation: A 307
Headed anchor bolts	ASTM Designation: A 307, Grade B, including S1 supplementary requirements
Nonheaded anchor bolts	ASTM Designation: A 307, Grade C, including S1 supplementary requirements and S1.6 of AASHTO Designation: M 314 supplementary requirements or AASHTO Designation: M 314, Grade 36 or 55, including S1 supplementary requirements
High-strength bolts and studs, threaded rods, and nonheaded anchor bolts	ASTM Designation: A 449, Type 1
Nuts	ASTM Designation: A 563, including Appendix X1*
Washers	ASTM Designation: F 844
Components of high-strength steel fastener assemblies for use in structural steel joints:	
Bolts	ASTM Designation: A 325, Type 1
Tension control bolts	ASTM Designation: F 1852, Type 1
Nuts	ASTM Designation: A 563, including Appendix X1*
Hardened washers	ASTM Designation: F 436, Type 1, Circular, including S1 supplementary requirements
Direct tension indicators	ASTM Designation: F 959, Type 325, zinc-coated
Stainless steel fasteners (Alloys 304 & 316) for general applications:	
Bolts, screws, studs, threaded rods, and nonheaded anchor bolts	ASTM Designation: F 593 or F 738M
Nuts	ASTM Designation: F 594 or F 836M
Washers	ASTM Designation: A 240/A 240M and ANSI B 18.22M
Carbon-steel castings	ASTM Designation: A 27/A 27M, Grade 65-35 [450-240], Class 1
Malleable iron castings	ASTM Designation: A 47, Grade 32510 or A 47M, Grade 22010
Gray iron castings	ASTM Designation: A 48, Class 30B
Ductile iron castings	ASTM Designation: A 536, Grade 65-45-12
Cast iron pipe	Commercial quality
Steel pipe	Commercial quality, welded or extruded
Other parts for general Applications	Commercial quality

* Zinc-coated nuts that will be tightened beyond snug or wrench tight shall be furnished with a dyed dry lubricant conforming to Supplementary Requirement S2 in ASTM Designation: A 563.

The second paragraph in Section 75-1.03, "Miscellaneous Bridge Metal," of the Standard Specifications is amended to read:

• Miscellaneous bridge metal shall consist of the following, except as further provided in Section 51-1.19, "Utility Facilities," and in the special provisions:

A. Bearing assemblies, equalizing bolts and expansion joint armor in concrete structures.
B. Expansion joint armor in steel structures.
C. Manhole frames and covers, frames and grates, ladder rungs, guard posts and access door assemblies.
D. Deck drains, area drains, retaining wall drains, and drainage piping, except drainage items identified as "Bridge Deck Drainage System" in the special provisions.

The seventh paragraph of Section 75-1.03, "Miscellaneous Bridge Metal," of the Standard Specifications is amended to read:

• Sheet steel for access doors shall be galvanized sheet conforming to the requirements in ASTM Designation: A 653/A 653M, Coating Designation Z600 {G210}.

The table in the eighteenth paragraph of Section 75-1.03, "Miscellaneous Bridge Metal," of the Standard Specifications is amended to read:

Stud Diameter (millimeters)	Sustained Tension Test Load (kilonewtons)
29.01-33.00	137.9
23.01-29.00	79.6
21.01-23.00	64.1
* 18.01-21.00	22.2
15.01-18.00	18.2
12.01-15.00	14.2
9.01-12.00	9.34
6.00-9.00	4.23

* Maximum stud diameter permitted for mechanical expansion anchors.

The table in the nineteenth paragraph of Section 75-1.03, "Miscellaneous Bridge Metal," of the Standard Specifications is amended to read:

Stud Diameter (millimeters)	Ultimate Tensile Load (kilonewtons)
30.01-33.00	112.1
27.01-30.00	88.1
23.01-27.00	71.2
20.01-23.00	51.6
16.01-20.00	32.0
14.01-16.00	29.4
12.00-14.00	18.7

The table in the twenty-second paragraph of Section 75-1.03, "Miscellaneous Bridge Metal," of the Standard Specifications is amended to read:

Installation Torque Values, (newton meters)

Stud Diameter (millimeters)	Shell Type Mechanical Expansion Anchors	Integral Stud Type Mechanical Expansion Anchors	Resin Capsule Anchors and Cast-in-Place Inserts
29.01-33.00	—	—	540
23.01-29.00	—	—	315
21.01-23.00	—	—	235
18.01-21.00	110	235	200
15.01-18.00	45	120	100
12.01-15.00	30	65	40
9.01-12.00	15	35	24
6.00-9.00	5	10	—

The twenty-fourth paragraph of Section 75-1.03, "Miscellaneous Bridge Metal," of the Standard Specifications is amended to read:

• Sealing compound, for caulking and adhesive sealing, shall be a polysulfide or polyurethane material conforming to the requirements in ASTM Designation: C 920, Type S, Grade NS, Class 25, Use O.

The third paragraph in Section 75-1.035, "Bridge Joint Restrainer Units," of the Standard Specifications is amended to read:

• Cables shall be 19 mm preformed, 6 x 19, wire strand core or independent wire rope core (IWRC), galvanized in conformance with the requirements in Federal Specification RR-W-410, right regular lay, manufactured of improved plow steel with a minimum breaking strength of 200 kN. Two certified copies of mill test reports of each manufactured length of cable used shall be furnished to the Engineer.

The twelfth paragraph in Section 75-1.035, "Bridge Joint Restrainer Units," of the Standard Specifications is amended to read:

• Concrete for filling cable drum units shall conform to the provisions in Section 90-10, "Minor Concrete," or at the option of the Contractor, may be a mix with 9.5 mm maximum size aggregate and not less than 400 kilograms of cementitious material per cubic meter.

The second paragraph in Section 75-1.05, "Galvanizing," of the Standard Specifications is amended to read:

• At the option of the Contractor, material thinner than 3.2 mm shall be galvanized either before fabrication in conformance with the requirements of ASTM Designation: A 653/A 653M, Coating Designation Z600, or after fabrication in conformance with the requirements of ASTM Designation: A 123, except that the weight of zinc coating shall average not less than 365 g per square meter of actual surface area with no individual specimen having a coating weight of less than 305 g per square meter.

SECTION 80: FENCES

Issue Date: January 5, 2007

The second paragraph of Section 80-3.01B(2), "Treated Wood Posts and Braces," of the Standard Specifications is amended to read:

• Posts and braces to be treated shall be pressure treated in conformance with the provisions in Section 58, "Preservative Treatment of Lumber, Timber and Piling," and AWPA Use Category System: UC4A, Commodity Specification A or B.

The fourth paragraph of Section 80-3.01F, "Miscellaneous," of the Standard Specifications is amended to read:

• Portland cement concrete for metal post and brace footings and for deadmen shall be minor concrete conforming to the provisions in Section 90-10, "Minor Concrete." Minor concrete shall contain not less than 275 kg of cementitious material per cubic meter.

The fourth paragraph of Section 80-4.01C, "Miscellaneous," of the Standard Specifications is amended to read:

• Portland cement concrete for metal post and for deadmen shall be produced from minor concrete conforming to the provisions in Section 90-10, "Minor Concrete." Minor concrete shall contain not less than 275 kg of cementitious material per cubic meter.

SECTION 81: MONUMENTS

Issue Date: June 30, 2006

The fifth paragraph of Section 81-1.02, "Materials," of the Standard Specifications is amended to read:

• At the option of the Contractor, the frame and cover for Type B and Type D survey monuments shall be fabricated from either cast steel or gray cast iron. The covers shall fit into the frames without rocking.

The seventh paragraph of Section 81-1.02, "Materials," of the Standard Specifications is amended to read:

• Granular material for Type B and Type D survey monuments shall be gravel, crushed gravel, crushed rock or any combination thereof. Granular material shall not exceed 37.5 mm in greatest dimension.

SECTION 82: MARKERS AND DELINEATORS

Issue Date: June 30, 2006

The first paragraph of Section 82-1.02B, "Metal Posts," of the Standard Specifications is amended to read:

• Steel for metal posts shall conform to the requirements in ASTM Designation: A 36/A 36M. The posts shall be galvanized in conformance with the requirements in Section 75-1.05, "Galvanizing."

The third paragraph of Section 82-1.02D, "Target Plates," of the Standard Specifications is amended to read:

• The zinc-coated steel sheet shall conform to the requirements in ASTM Designation: A 653/A 653M, Classification: Commercial Steel (CS Types A, B and C). The steel sheets shall be galvanized in conformance with the requirements in Section 75-1.05, "Galvanizing." The zinc-coated surface shall be prepared for painting in a manner designed to produce optimum paint adherence. The surface preparation shall be accomplished without damaging or removing the zinc coating. Any evidence of damage or removal of the zinc coating shall be cause for rejection of the entire lot.

The eleventh paragraph of Section 82-1.02D, "Target Plates," of the Standard Specifications is amended to read:

• When tested in conformance with the requirements in California Test 671, the painted metal target plates shall, in general, have satisfactory resistance to weathering, humidity, salt spray and chemicals; the enamel coating shall have satisfactory adherence and impact resistance, a pencil lead hardness of HB minimum, 60° specular gloss of 80 percent minimum, an excitation purity of 3 percent maximum as received and after 1000 hours in an artificial weathering device in conformance with the requirements in ASTM Designation: G 155, Table X3.1, Cycle 1, and a daylight luminous directional reflectance ("Y" value) of 70 minimum.

The second paragraph of Section 82-1.02F, "Reflectors," of the Standard Specifications is amended to read:

• Reflectors for flexible target plates on Type K object markers and target plates on Class 2 delineators, and reflectors for Class 1 delineators shall be made from impact resistant retroreflective sheeting as specified in the special provisions. The color of the retroreflective sheeting shall conform to the color designated on the plans and the Chromaticity Coordinates specified in ASTM Designation: D 4956, or the PR color number specified by the Federal Highway Administration's Color Tolerance Chart.

The fourth paragraph of Section 82-1.02F, "Reflectors," of the Standard Specifications is amended to read:

The instrumental method of determining color shall conform to the requirements specified in ASTM Designation: D 4956. In the event of any dispute concerning the test results of instrumental testing, the visual test shall prevail.

SECTION 83: RAILINGS AND BARRIERS

Issue Date: August 17, 2007

The seventh paragraph in Section 83-1.02, "Materials and Construction," of the Standard Specifications is amended to read:

• Mortar shall conform to the provisions in Section 51-1.135, "Mortar," and shall consist of one part by volume of cementitious material and 3 parts of clean sand.

The first paragraph of Section 83-1.02B, "Metal Beam Guard Railing," of the Standard Specifications is amended to read:

• The rail elements, backup plates, terminal sections, end and return caps, bolts, nuts and other fittings shall conform to the requirements in AASHTO Designation: M 180, except as modified in this Section 83-1.02B and as specified in Section 83-1.02. The rail elements, backup plates, terminal sections, end and return caps shall conform to Class A, Type 1 W-Beam guard railing as shown in AASHTO Designation: M 180. The edges and center of the rail element shall contact each post block. Rail element joints shall be lapped not less than 316 mm and bolted. The rail metal, in addition to conforming to the requirements in AASHTO Designation: M 180, shall withstand a cold bend, without cracking, of 180 degrees around a mandrel of a diameter equal to 2.5 times the thickness of the plate.

The ninth paragraph in Section 83-1.02B, "Metal Beam Guard Railing," of the Standard Specifications is amended to read:

• The grades and species of wood posts and blocks shall be No. 1 timbers (also known as No. 1 structural) Douglas fir or No. 1 timbers Southern yellow pine. Wood posts and blocks shall be graded in conformance with the provisions in Section 57-2, "Structural Timber," of the Standard Specifications, except allowances for shrinkage after mill cutting shall in no case exceed 5 percent of the American Lumber Standards minimum sizes, at the time of installation.

The eleventh paragraph in Section 83-1.02B, "Metal Beam Guard Railing," of the Standard Specifications is amended to read:

• After fabrication, wood posts and blocks shall be pressure treated in conformance with Section 58, "Preservative Treatment of Lumber, Timber and Piling," and AWPA Use Category System: UC4A, Commodity Specification A.

The twelfth paragraph in Section 83-1.02B, "Metal Beam Guard Railing," of the Standard Specifications is amended to read:

• If copper naphthenate, ammoniacal copper arsenate, chromated copper arsenate, ammoniacal copper zinc arsenate, ammoniacal copper quat or copper azole is used to treat the wood posts and blocks, the bolt holes shall be treated as follows:

A. Before the bolts are inserted, bolt holes shall be filled with a grease, recommended by the manufacturer for corrosion protection, which will not melt or run at a temperature of 65°C.

The 24th paragraph of Section 83-1.02B, "Metal Beam Guard Railing," of the Standard Specifications is amended to read:

• End anchor assemblies and rail tensioning assemblies for metal beam guard railing shall be constructed as shown on the plans and shall conform to the following provisions:

1. An end anchor assembly (Type SFT) for metal beam guard railing shall consist of an anchor cable, an anchor plate, a wood post, a steel foundation tube, a steel soil plate and hardware.
2. An end anchor assembly (Type CA) for metal beam guard railing shall consist of an anchor cable, an anchor plate, a single anchor rod or double anchor rods, hardware and one concrete anchor.
3. A rail tensioning assembly for metal beam guard railing shall consist of an anchor cable, an anchor plate, and hardware.
4. The anchor plate, metal plates, steel foundation tubes and steel soil plate shall be fabricated of steel conforming to the requirements in ASTM Designation: A 36/A 36M.
5. The anchor rods shall be fabricated of steel conforming to the requirements in ASTM Designation: A 36/A 36M, A 441 or A 572, or ASTM Designation: A 576, Grades 1018, 1019, 1021 or 1026. The eyes shall be hot forged or formed with full penetration welds. After fabrication, anchor rods with eyes that have been formed with any part of the eye below 870°C during the forming operation or with eyes that have been closed by welding shall be thermally stress relieved prior to galvanizing. The completed anchor rod, after galvanizing, shall develop a strength of 220 kN.
6. In lieu of built-up fabrication of anchor plates as shown on the plans, anchor plates may be press-formed from steel plate, with or without welded seams.
7. All bolts and nuts shall conform to the requirements in ASTM Designation: A 307, unless otherwise specified in the special provisions or shown on the plans.
8. Anchor cable shall be 19 mm preformed, 6 x 19, wire strand core or independent wire rope core (IWRC), galvanized in conformance with the requirements in Federal Specification RR-W-410, right regular lay, manufactured of improved plow steel with a minimum breaking strength of 200 kN. Two certified copies of mill test reports of each manufactured length of cable used shall be furnished to the Engineer. The overall length of each cable anchor assembly shall be as shown on the plans, but shall be a minimum of 2 m.
9. Where shown on the plans, cable clips and a cable thimble shall be used to attach cable to the anchor rod. Thimbles shall be commercial quality, galvanized steel. Cable clips shall be commercial quality drop forged galvanized steel.
10. The swaged fitting shall be machined from hot-rolled bars of steel conforming to AISI Designation: C 1035, and shall be annealed suitable for cold swaging. The swaged fitting shall be galvanized before swaging. A lock pin hole to accommodate a 6 mm, plated, spring steel pin shall be drilled through the head of the swage fitting to retain the stud in proper position. The manufacturer's identifying mark shall be stamped on the body of the swage fitting.
11. The 25 mm nominal diameter stud shall conform to the requirements in ASTM Designation: A 449 after galvanizing. Prior to galvanizing, a 10 mm slot for the locking pin shall be milled in the stud end.
12. The swaged fittings, stud and nut assembly shall develop the specified breaking strength of the cable.
13. The cable assemblies shall be shipped as a complete unit including stud and nut.
14. Clevises shall be drop forged galvanized steel and shall develop the specified breaking strength of the cable.
15. One sample of cable properly fitted with swaged fitting and right hand thread stud at both ends as specified above, including a clevis when shown on the plans, one meter in total length, shall be furnished the Engineer for testing.

16. The portion of the anchor rod to be buried in earth shall be coated with a minimum 0.5 mm thickness of coal tar enamel conforming to AWWA Standard: C203 or a coal tar epoxy conforming to the requirements in Steel Structures Painting Council Paint Specification No. 16, Coal-Tar Epoxy-Polymide Black Paint or Corps of Engineers Specification, Formula C-200a, Coal-Tar Epoxy Paint.
17. Metal components of the anchor assembly shall be fabricated in conformance with good shop practice and shall be hot-dip galvanized in conformance with the provisions in Section 75-1.05, "Galvanizing."
18. Anchor cables shall be tightened after the concrete anchor has cured for at least 5 days.
19. Concrete used to construct anchors for end anchor assemblies shall be Class 3 or minor concrete conforming to the provisions in Section 90, "Portland Cement Concrete."
20. Concrete shall be placed against undisturbed material of the excavated holes for end anchors. The top 300 mm of holes shall be formed, if required by the Engineer.
21. Reinforcing steel in concrete anchors for end anchor assemblies shall conform to the provisions in Section 52, "Reinforcement."

The second paragraph in Section 83-1.02D, "Steel Bridge Railing," of the Standard Specifications is amended to read:

• Structural shapes, tubing, plates, bars, bolts, nuts, and washers shall be structural steel conforming to the provisions in Section 55-2, "Materials." Other fittings shall be commercial quality.

The second and third paragraphs in Section 83-1.02E, "Cable Railing," of the Standard Specifications are replaced with the following paragraph:

• Pipe for posts and braces shall be standard steel pipe or pipe that conforms to the provisions in Section 80-4.01A, "Posts and Braces."

The 2nd sentence of the 7th paragraph of Section 83-1.02E, "Cable Railing," of the Standard Specifications is amended to read:

Cable shall be galvanized in conformance with the requirements in Federal Specification RR-W-410.

The 5th paragraph of Section 83-1.02I, "Chain Link Railing," of the Standard Specifications is amended to read:

Where shown on the plans, cables used in the frame shall be 8 mm in diameter, wire rope, with a minimum breaking strength of 22 kN and shall be galvanized in conformance with the requirements in Federal Specification RR-W-410.

The 14th paragraph of Section 83-1.02I, "Chain Link Railing," of the Standard Specifications is amended to read:

Chain link fabric shall be either 11-gage Type I zinc-coated fabric conforming to the requirements in AASHTO M 181 or 11-gage Type IV polyvinyl chloride (PVC) coated fabric conforming to the requirements in Federal Specification RR-F-191/1.

The second paragraph of Section 83-1.03, "Measurement," of the Standard Specifications is amended to read:

- Except for metal beam guard railing within the pay limits of a terminal system end treatment or transition railing (Type WB), metal beam guard railing will be measured by the meter along the face of the rail element from end post to end post of the completed railing at each installation. The point of measurement at each end post will be the center of the bolt attaching the rail element to the end post.

The seventh paragraph of Section 83-1.03, "Measurement," of the Standard Specifications is amended to read:

- The quantities of end anchor assemblies (Type SFT or Type CA) and rail tensioning assemblies will be measured as units determined from actual count. An end anchor assembly (Type CA) with 2 cables attached to one concrete anchor will be counted as one terminal anchor assembly (Type CA) for measurement and payment.

The eighth paragraph of Section 83-1.03, "Measurement," of the Standard Specifications is amended to read:

- The quantities of return and end caps and the various types of terminal sections for metal beam guard railing will be determined as units from actual count.

The third paragraph of Section 83-1.04, "Payment," of the Standard Specifications is amended to read:

- The contract unit prices paid for end anchor assembly (Type SFT), end anchor assembly (Type CA), and rail tensioning assembly shall include full compensation for furnishing all labor, materials, tools, equipment, and incidentals, and for doing all work involved in constructing the end anchor assemblies, complete in place, including drilling anchor plate bolt holes in rail elements, driving steel foundation tubes, excavating for concrete anchor holes and disposing of surplus material, as shown on the plans, as specified in these specifications and the special provisions, and as directed by the Engineer.

The fourth paragraph of Section 83-1.04, "Payment," of the Standard Specifications is amended to read:

- The contract unit prices paid for return caps, end caps, and the various types of terminal sections for metal beam guard railing shall include full compensation for furnishing all labor, materials, tools, equipment, and incidentals, and for doing all the work involved in installing terminal sections, return and end caps, complete in place, as shown on the plans, as specified in these specifications and the special provisions, and as directed by the Engineer.

The second paragraph of Section 83-2.02B, "Thrie Beam Barrier," of the Standard Specifications is amended to read:

- Rail elements, backup plates, terminal connectors, terminal sections, and return caps shall conform to Class A, Type 1 thrie beam guard railing as shown in AASHTO Designation: M 180.

The fourteenth paragraph of Section 83-2.02B, "Thrie Beam Barrier," of the Standard Specifications is amended to read:

• All metal work shall be fabricated in the shop, and no punching, cutting or welding will be permitted in the field. Rail elements shall be lapped so that the exposed ends will not face approaching traffic. Terminal sections and return caps shall be installed in conformance with the manufacturer's recommendation.

The first paragraph in Section 83-2.02D(2), "Materials," of the Standard Specifications is amended to read:

• Type 50 and 60 series concrete barriers shall be constructed of minor concrete conforming to the provisions in Section 90-10, "Minor Concrete," except as follows:

a. The maximum size of aggregate used for extruded or slip-formed concrete barriers shall be at the option of the Contractor, but in no case shall the maximum size be larger than 37.5-mm or smaller than 9.5-mm.
b. If the 9.5 mm maximum size aggregate grading is used to construct extruded or slip-formed concrete barriers, the cementitious material content of the minor concrete shall be not less than 400 kilograms per cubic meter.

The third paragraph in Section 83-2.02D(2), "Materials," of the Standard Specifications is amended to read:

• The concrete paving between the tops of the 2 walls of concrete barrier (Types 50E, 60E, 60GE, and 60SE) and the optional concrete slab at the base between the 2 walls of concrete barrier (Types 50E, 60E, 60GE, and 60SE) shall be constructed of minor concrete conforming to the provisions of Section 90-10, "Minor Concrete," except that the minor concrete shall contain not less than 300 kilograms of cementitious material per cubic meter.

The first paragraph of Section 83-2.03, "Measurement," of the Standard Specifications is amended to read:

• Except for single thrie beam barrier within the pay limits of transition railing (Type STB), single thrie beam barrier will be measured by the meter from end post to end post along the face of the rail element of the installed barrier. Single thrie beam barriers constructed on each side of piers under structures or other obstructions will be measured for payment along each line of the installed barrier.

The second paragraph of Section 83-2.03, "Measurement," of the Standard Specifications is amended to read:

• Except for double thrie beam barrier within the pay limits of transition railing (Type DTB), double thrie beam barrier will be measured by the meter from end post to end post along the center line of the installed barrier.

The fifth paragraph of Section 83-2.03, "Measurement," of the Standard Specifications is amended to read:

• The quantity of return caps, terminal connectors and the various types of terminal sections for single and double thrie beam barriers will be determined as units from actual count.

The sixth paragraph of Section 83-2.03, "Measurement," of the Standard Specifications is amended to read:

• The quantity of end anchor assemblies will be paid for as units determined from actual count.

The first paragraph of Section 83-2.04, "Payment," of the Standard Specifications is amended to read:

• The various types of thrie beam barrier, measured as specified in Section 83-2.03, "Measurement," will be paid for at the contract price per meter for single or double thrie beam barrier, whichever applies, and the contract unit price or prices for end anchor assemblies, return caps, terminal connectors and the various types of terminal sections.

The second paragraph of Section 83-2.04, "Payment," of the Standard Specifications is amended to read:

• The above prices and payments shall include full compensation for furnishing all labor, materials, tools, equipment and incidentals, and for doing all the work involved in constructing the barrier, complete in place, including drilling holes for wood posts, driving posts, backfilling the space around posts, excavating and backfilling end anchor assembly holes, connecting thrie beam barrier to concrete surfaces and disposing of surplus excavated material, and for furnishing, placing, removing and disposing of the temporary railing for closing the gap between existing barrier and the barrier being constructed as shown on the plans, and as specified in these specifications and the special provisions, and as directed by the Engineer.

The fourth paragraph in Section 83-2.04, "Payments," of the Standard Specifications is amended to read:

• Steel plate barrier attached to concrete barrier at overhead sign foundations, electroliers, drainage structures, and other locations shown on the plans will be measured and paid for as the type of concrete barrier attached thereto.

SECTION 84: TRAFFIC STRIPES AND PAVEMENT MARKINGS

Issue Date: July 21, 2006

The first paragraph of Section 84-2.02, "Materials," of the Standard Specifications is amended to read:

• The thermoplastic material shall conform to State Specification PTH-02SPRAY, PTH-02HYDRO or PTH-02ALKYD. Glass beads to be applied to the surface of the molten thermoplastic material shall conform to the requirements of State Specification 8010-004 (Type II).

The first paragraph of Section 84-3.02, "Materials," of the Standard Specifications is amended to read:

• Paint for traffic stripes and pavement markings shall conform to the following State Specifications:

Paint Type	Color	State Specification No.
Waterborne Traffic Line	White, Yellow and Black	PTWB-01
Acetone-Based	White, Yellow and Black	PT-150VOC(A)
Waterborne Traffic Line for disabled persons' parking, and other curb markings	Blue, Red and Green	Federal Specification No. TT-P-1952D

The fourth paragraph of Section 84-3.02, "Materials," of the Standard Specifications is amended to read:

• The kind of paint to be used (waterborne or acetone-based) shall be determined by the Contractor based on the time of year the paint is applied and local air pollution control regulations.

The first paragraph of Section 84-3.05, "Application," of the Standard Specifications is amended to read:

Traffic stripes and pavement markings shall be applied only on dry surfaces and only during periods of favorable weather. Painting shall not be performed when the atmospheric temperature is below 5°C when using acetone-based paint or below 10°C when using water borne paint; when freshly painted surfaces may become damaged by rain, fog, or condensation; nor when it can be anticipated that the atmospheric temperature will drop below the aforementioned 5°C or 10°C temperatures during the drying period.

The third paragraph of Section 84-3.05, "Application," of the Standard Specifications is deleted.

The tenth paragraph of Section 84-3.05, "Application," of the Standard Specifications is amended to read:

• Paint to be applied in 2 coats shall be applied approximately as follows:

	Square Meter Coverage Per Liter	
Paint Type	First Coat	Second Coat
Waterborne Paint	6	6
Acetone-Based Paint	10	5

SECTION 85: PAVEMENT MARKERS

Issue Date: August 17, 2007

The second through fifth paragraphs in Section 85-1.03, "Sampling, Tolerances and Packaging," of the Standard Specifications are amended to read:

Sampling

- Twenty markers selected at random will constitute a representative sample for each lot of markers.
- The lot size shall not exceed 25 000 markers.

Tolerances

- Three test specimens will be randomly selected from the sample for each test and tested in conformance with these specifications. Should any one of the 3 specimens fail to conform with the requirements in these specifications, 6 additional specimens will be tested. The failure of any one of these 6 specimens shall be cause for rejection of the entire lot or shipment represented by the sample.
- The entire sample of retroreflective pavement markers will be tested for reflectance. The failure of 10 percent or more of the original sampling shall be cause for rejection.

Section 85-1.04, "Non-Reflective Pavement Markers," of the Standard Specifications is amended to read:

85-1.04 Non-Reflective Pavement Markers

- Non-reflective pavement markers (Types A and AY) shall be, at the option of the Contractor, either ceramic or plastic conforming to these specifications.
- The top surface of the marker shall be convex with a gradual change in curvature. The top, bottom and sides shall be free of objectionable marks or discoloration that will affect adhesion or appearance.
- The bottom of markers shall have areas of integrally formed protrusions or indentations, which will increase the effective bonding surface area of adhesive. The bottom surface of the marker shall not deviate more than 1.5 mm from a flat surface. The areas of protrusion shall have faces parallel to the bottom of the marker and shall project approximately one mm from the bottom.

The second through fourth paragraphs of Section 85-1.04A, "Non-Reflective Pavement Markers (Ceramic)," of the Standard Specifications are deleted.

The table in the fifth paragraph in Section 85-1.04A, "Non-Reflective Pavement Markers (Ceramic)," of the Standard Specifications is amended to read:

Testing

- Tests shall be performed in conformance with the requirements in California Test 669.

Test	Test Description	Requirement
a	Bond strength	4.8 MPa, min.
b	Glaze thickness	180 µm, min.
c	Hardness	6 Moh, min.
d	Luminance factor, Type A, white markers only, glazed surface	75, min.
e	Yellowness index, Type A, white markers only, glazed surface	7, max.
f	Color-yellow, Type AY, yellow markers only. The chromaticity coordinates shall be within a color box defined in CTM 669	Pass
g	Compressive strength	6700 N, min.
h	Water absorption	2.0 %, max.
i	Artificial weathering, 500 hours exposure, yellowness index	20, max.

Section 85-1.04B, "Non-Reflective Pavement Markers (Plastic)," of the Standard Specifications is amended to read:

85-1.04B Non-Reflective Pavement Markers (Plastic)

- Plastic non-reflective pavement markers Types A and AY shall be, at the option of the Contractor, either polypropylene or acrylonitrile-butadiene-styrene (ABS) plastic type.
- Plastic markers shall conform to the testing requirements specified in Section 85-1.04A, "Non-Reflective Pavement Markers (Ceramic)," except that Tests a, b, c, and h shall not apply. The plastic markers shall not be coated with substances that interfere with the ability of the adhesive bonding to the marker.

The sixth and seventh paragraphs in Section 85-1.05, "Retroreflective Pavement Markers," of the Standard Specifications are amended to read:

Testing

- Tests shall be performed in conformance with the requirements in California Test 669.

Test Description	Requirement		
Bond strength[a]	3.4 MPa, min.		
Compressive strength[b]	8900 N, min.		
Abrasion resistance, marker must meet the respective specific intensity minimum requirements after abrasion.	Pass		
Water Soak Resistance	No delamination of the body or lens system of the marker nor loss of reflectance		
	Specific Intensity		
Reflectance	Clear	Yellow	Red
0° Incidence Angle, min.	3.0	1.5	0.75
20° Incidence Angle, min.	1.2	0.60	0.30
After one year field evaluation	0.30	0.15	0.08

a. Failure of the marker body or filler material prior to reaching 3.4 MPa shall constitute a failing bond strength test.

b. Deformation of the marker of more than 3 mm at a load of less than 8900 N or delamination of the shell and the filler material of more than 3 mm regardless of the load required to break the marker shall be cause for rejection of the markers as specified in Section 85-1.03, "Sampling, Tolerances and Packaging."

• Pavement markers to be placed in pavement recesses shall conform to the above requirements for retroreflective pavement markers except that the minimum compressive strength requirement shall be 5338 N.

The eighth paragraph of Section 85-1.05, "Retroreflective Pavement Markers," of the Standard Specifications is deleted.

The eighth paragraph in Section 85-1.06, "Placement," of the Standard Specifications is amended to read:

• Epoxy adhesive shall not be used to apply non-reflective plastic pavement markers.

The seventh sentence of the fourteenth paragraph of Section 85-1.06, "Placement," of the Standard Specifications is amended to read:

• Soft rags moistened with mineral spirits conforming to Army Mil-PRF-680A(1) or kerosene may be used, if necessary, to remove adhesive from exposed faces of pavement markers.

SECTION 86: SIGNALS, LIGHTING AND ELECTRICAL SYSTEMS

Issue Date: January 5, 2007

The second paragraph of Section 86-1.01, "Description," of the Standard Specifications is amended to read:

• The locations of signals, beacons, standards, lighting fixtures, signs, controls, services and appurtenances shown on the plans are approximate and the exact locations will be approved by the Engineer in the field.

The tenth paragraph of Section 86-1.06, "Maintaining Existing and Temporary Electrical Systems," of the Standard Specifications is amended to read:

- These provisions will not relieve the Contractor in any manner of the Contractor's responsibilities as provided in Section 7-1.12, "Indemnification and Insurance," and Section 7-1.16, "Contractor's Responsibility for the Work and Materials."

The first paragraph of Section 86-2.03, "Foundations," of the Standard Specifications is amended to read:

- Except for concrete for cast-in-drilled-hole concrete pile foundations, portland cement concrete shall conform to Section 90-10, "Minor Concrete."

The fourth paragraph in Section 86-2.03, "Foundations," of the Standard Specifications is amended to read:

- After each post, standard, and pedestal on structures is in proper position, mortar shall be placed under the base plate as shown on the plans. The exposed portions shall be formed to present a neat appearance. Mortar shall conform to Section 51-1.135, "Mortar," except the mortar shall consist of one part by volume of cementitious material and 3 parts of clean sand and shall contain only sufficient moisture to permit packing. Mortar shall be cured by keeping it damp for 3 days.

The fifth paragraph of Section 86-2.03, "Foundations," of the Standard Specifications is amended to read:

- Reinforced cast-in-drilled-hole concrete pile foundations for traffic signal and lighting standards shall conform to the provisions in Section 49, "Piling," with the following exceptions: 1) Material resulting from drilling holes shall be disposed of in conformance with the provisions in Section 86-2.01, "Excavating and Backfilling," and 2) Concrete filling for cast-in-drilled-hole concrete piles will not be considered as designated by compressive strength.

The seventh paragraph of Section 86-2.03, "Foundations," of the Standard Specifications is amended to read:

- Forms shall be true to line and grade. Tops of foundations for posts and standards, except special foundations, shall be finished to curb or sidewalk grade or as directed by the Engineer. Forms shall be rigid and securely braced in place. Conduit ends and anchor bolts shall be placed in proper position and to proper height, and anchor bolts shall be held in place by means of rigid top and bottom templates. The bottom template shall be made of steel. The bottom template shall provide proper spacing and alignment of the anchor bolts near their bottom embedded end. The bottom template shall be installed before placing footing concrete. Anchor bolts shall not be installed more than 1:40 from vertical.

Section 86-2.03, "Foundations," of the Standard Specifications is amended by deleting the eighth paragraph.

The twelfth paragraph of Section 86-2.03, "Foundations," of the Standard Specifications is amended to read:

• Plumbing of the standards shall be accomplished by adjusting the leveling nuts before placing the mortar or before the foundation is finished to final grade. Shims or other similar devices shall not be used for plumbing or raking of posts, standards, or pedestals. After final adjustments of both top nuts and leveling nuts on anchorage assemblies have been made, firm contact shall exist between all bearing surfaces of the anchor bolt nuts, washers, and the base plates.

The first paragraph of Section 86-2.04, "Standards, Steel Pedestals and Posts," of the Standard Specifications is amended to read:

• Bolts, nuts and washers, and anchor bolts for use in signal and lighting support structures shall conform to the provisions in Section 55-2, "Materials." Except when bearing-type connections or slipbases are specified, high-strength bolted connections shall conform to the provisions in Section 55-3.14, "Bolted Connections." Welding, nondestructive testing (NDT) of welds, and acceptance and repair criteria for NDT of steel members shall conform to the requirements of AWS D1.1 and the special provisions.

The second paragraph of Section 86-2.04, "Standards, Steel Pedestals and Posts," of the Standard Specifications is amended to read:

• On each lighting standard except Type 1, one rectangular corrosion resistant metal identification tag shall be permanently attached above the hand hole, near the base of the standard, using stainless steel rivets. On each signal pole support, two corrosion resistant metal identification tags shall be attached, one above the hand hole near the base of the vertical standard and one on the underside of the signal mast arm near the arm plate. As a minimum, the information on each identification tag shall include the name of the manufacturer, the date of manufacture, the identification number as shown on the plans, the contract number, and a unique identification code assigned by the fabricator. This number shall be traceable to a particular contract and the welds on that component, and shall be readable after the support structure is coated and installed. The lettering shall be a minimum of 7 mm high. The information may be either depressed or raised, and shall be legible.

The fourth paragraph of Section 86-2.04, "Standards, Steel Pedestals and Posts," of the Standard Specifications is amended to read:

• Ferrous metal parts of standards, with shaft length of 4.6 m and longer, shall conform to the details shown on the plans, the provisions in Section 55-2, "Materials," except as otherwise noted, and the following requirements:

A. Except as otherwise specified, standards shall be fabricated from sheet steel of weldable grade having a minimum yield strength, after fabrication, of 276 MPa.
B. Certified test reports which verify conformance to the minimum yield strength requirements shall be submitted to the Engineer. The test reports may be the mill test reports for the as-received steel or, when the as-received steel has a lower yield strength than required, the Contractor shall provide supportive test data which provides assurance that the Contractor's method of cold forming will consistently increase the tensile

properties of the steel to meet the specified minimum yield strength. The supportive test data shall include tensile properties of the steel after cold forming for specific heats and thicknesses.

C. When a single-ply 8-mm thick pole is specified, a 2-ply pole with equivalent section modulus may be substituted.

D. Standards may be fabricated of full-length sheets or shorter sections. Each section shall be fabricated from not more than 2 pieces of sheet steel. Where 2 pieces are used, the longitudinal welded seams shall be directly opposite one another. When the sections are butt-welded together, the longitudinal welded seams on adjacent sections shall be placed to form continuous straight seams from base to top of standard.

E. Butt-welded circumferential joints of tubular sections requiring CJP groove welds shall be made using a metal sleeve backing ring inside each joint. The sleeve shall be 3-mm nominal thickness, or thicker, and manufactured from steel having the same chemical composition as the steel in the tubular sections to be joined. When the sections to be joined have different specified minimum yield strengths, the steel in the sleeve shall have the same chemical composition as the tubular section having the higher minimum yield strength. The width of the metal sleeve shall be consistent with the type of NDT chosen and shall be a minimum width of 25 mm. The sleeve shall be centered at the joint and be in contact with the tubular section at the point of the weld at time of fit-up.

F. Welds shall be continuous.

G. The weld metal at the transverse joint shall extend to the sleeve, making the sleeve an integral part of the joint.

H. During fabrication, longitudinal seams on vertical tubular members of cantilevered support structures shall be centered on and along the side of the pole that the pole plate is located. Longitudinal seams on horizontal tubular members, including signal and luminaire arms, shall be within +/-45 degrees of the bottom of the arm.

I. The longitudinal seam welds in steel tubular sections may be made by the electric resistance welding process.

J. Longitudinal seam welds shall have 60 percent minimum penetration, except that within 150 mm of circumferential welds, longitudinal seam welds shall be CJP groove welds. In addition, longitudinal seam welds on lighting support structures having telescopic pole segment splices shall be CJP groove welds on the female end for a length on each end equal to the designated slip fit splice length plus 150 mm.

K. Exposed circumferential welds, except fillet and fatigue-resistant welds, shall be ground flush (-0, +2 mm) with the base metal prior to galvanizing or painting.

L. Circumferential welds and base plate-to-pole welds may be repaired only one time without written permission from the Engineer.

M. Exposed edges of the plates that make up the base assembly shall be finished smooth and exposed corners of the plates shall be broken unless otherwise shown on the plans. Shafts shall be provided with slip-fitter shaft caps.

N. Flatness of surfaces of 1) base plates that are to come in contact with concrete, grout, or washers and leveling nuts; 2) plates in high-strength bolted connections; 3) plates in joints where cap screws are used to secure luminaire and signal arms; and 4) plates used for breakaway slip base assemblies shall conform to the requirements in ASTM A6.

O. Standards shall be straight, with a permissive variation not to exceed 25 mm measured at the midpoint of a 9-m or 11-m standard and not to exceed 20 mm measured at the midpoint of a 5-m through 6-m standard. Variation shall not exceed 25 mm at a point 4.5 m above the base plate for Type 35 and Type 36 standards.

P. Zinc-coated nuts used on fastener assemblies having a specified preload (obtained by specifying a prescribed tension, torque value, or degree of turn) shall be provided with a colored lubricant that is clean and dry to the touch. The color of the lubricant shall be in contrast to the zinc coating on the nut so that the presence of the lubricant is visually obvious. In addition, either the lubricant shall be insoluble in water, or fastener components shall be shipped to the job site in a sealed container.

Q. No holes shall be made in structural members unless the holes are shown on the plans or are approved in writing by the Engineer.

R. Standards with an outside diameter of 300 mm or less shall be round. Standards with an outside diameter greater than 300 mm shall be round or multisided. Multisided standards shall have a minimum of 12 sides which shall be convex and shall have a minimum bend radius of 100 mm.

S. Mast arms for standards shall be fabricated from material as specified for standards, and shall conform to the dimensions shown on the plans.

T. The cast steel option for slip bases shall be fabricated from material conforming to the requirements in ASTM Designation: A 27/A 27M, Grade 70-40. Other comparable material may be used if written permission is given by the Engineer. The casting tolerances shall be in conformance with the Steel Founder's Society of America recommendations (green sand molding).

U. One casting from each lot of 50 castings or less shall be subject to radiographic inspection, in conformance with the requirements in ASTM Designation: E 94. The castings shall comply with the acceptance criteria severity level 3 or better for the types and categories of discontinuities in conformance with the requirements in ASTM Designations: E 186 and E 446. If the one casting fails to pass the inspection, 2 additional castings shall be radiographed. Both of these castings shall pass the inspection, or the entire lot of 50 will be rejected.

V. Material certifications, consisting of physical and chemical properties, and radiographic films of the castings shall be filed at the manufacturer's office. These certifications and films shall be available for inspection upon request.

W. High-strength bolts, nuts, and flat washers used to connect slip base plates shall conform to the requirements in ASTM Designation: A 325 or A 325M and shall be galvanized in conformance with the provisions in Section 75-1.05, "Galvanizing."

X. Plate washers shall be fabricated by saw cutting and drilling steel plate conforming to the requirements in AISI Designation: 1018, and be galvanized in conformance with the provisions in Section 75-1.05, "Galvanizing." Prior to galvanizing, burrs and sharp edges shall be removed and holes shall be chamfered sufficiently on each side to allow the bolt head to make full contact with the washer without tension on the bolt.

Y. High-strength cap screws shown on the plans for attaching arms to standards shall conform to the requirements in ASTM Designation: A 325, A 325M, or A 449, and shall comply with the mechanical requirements in ASTM Designation: A 325 or A 325M after galvanizing. The cap screws shall be galvanized in conformance with the provisions in Section 75-1.05, "Galvanizing." The threads of the cap screws shall be coated with a colored lubricant that is clean and dry to the touch. The color of the lubricant shall be in contrast to the color of the zinc coating on the cap screw so that presence of the lubricant is visually obvious. In addition, either the lubricant shall be insoluble in water, or fastener components shall be shipped to the job site in a sealed container.

Z. Unless otherwise specified, bolted connections attaching signal or luminaire arms to poles shall be considered slip critical. Galvanized faying surfaces on plates on luminaire and signal arms and matching plate surfaces on poles shall be roughened by hand using a

wire brush prior to assembly and shall conform to the requirements for Class C surface conditions for slip-critical connections in "Specification for Structural Joints Using ASTM A 325 or A 490 Bolts," a specification approved by the Research Council on Structural Connections (RCSC) of the Engineering Foundation. For faying surfaces required to be painted, the paint shall be an approved type, brand, and thickness that has been tested and approved according to the RCSC Specification as a Class B coating.

AA. Samples of fastener components will be randomly taken from each production lot by the Engineer and submitted, along with test reports required by appropriate ASTM fastener specifications, for QA testing and evaluation. Sample sizes for each fastener component shall be as determined by the Engineer.

The seventh paragraph of Section 86-2.04, "Standards, Steel Pedestals and Posts," of the Standard Specifications is amended to read:

• To avoid interference of arm plate-to-tube welds with cap screw heads, and to ensure cap screw heads can be turned using conventional installation tools, fabricators shall make necessary adjustments to details prior to fabrication and properly locate the position of arm tubes on arm plates during fabrication.

The fourth subparagraph of the eighteenth paragraph in Section 86-2.05C, "Installation," of the Standard Specifications is amended to read:

• The conduit shall be placed in the bottom of the trench, and the trench shall be backfilled with minor concrete conforming to the provisions in Section 90-10, "Minor Concrete." Minor concrete shall contain not less than 350 kilograms of cementitious material per cubic meter. Concrete backfill shall be placed to the pavement surface except, when the trench is in asphalt concrete pavement and additional pavement is not being placed, the top 30 mm of the trench shall be backfilled with asphalt concrete produced from commercial quality paving asphalt and aggregates.

The third subparagraph of the twenty-third paragraph in Section 86-2.05C, "Installation," of the Standard Specifications is amended to read:

• Precast concrete conduit cradles shall conform to the dimensions shown on the plans and shall be constructed of minor concrete and commercial quality welded wire fabric. Minor concrete shall conform to the provisions in Section 90-10, "Minor Concrete," and shall contain not less than 350 kilograms of cementitious material per cubic meter. The cradles shall be moist cured for not less than 3 days.

The seventh subparagraph of the twenty-third paragraph in Section 86-2.05C, "Installation," of the Standard Specifications is amended to read:

• The space around conduits through bridge abutment walls shall be filled with mortar conforming to the provisions in Section 51-1.135, "Mortar," except that the proportion of cementitious material to sand shall be 1:3.

The fifth paragraph in Section 86-2.07, "Traffic Pull Boxes," of the Standard Specifications is amended to read:

• Concrete placed around and under traffic pull boxes as shown on the plans shall be minor concrete conforming to the provisions in Section 90-10, "Minor Concrete."

The traffic signal controller cabinet requirement in the table in Section 86-2.08A, "Conductor Identification," of the Standard Specifications is amended to read:

Traffic Signal Controller Cabinet	Ungrounded Circuit Conductor	Blk	None	CON-1	6
	Grounded Circuit Conductor	Wht	None	CON-2	6

The second paragraph of Section 86-2.08B, "Multiple Circuit Conductors," of the Standard Specifications is amended to read by the following 2 paragraphs:

• At any point, the minimum insulation thickness of any Type USE, RHH, or RHW insulation shall be 1.0 mm for conductor sizes No. 14 to No. 10, inclusive; and 1.3 mm for No. 8 to No. 2, inclusive.

• At any point, the minimum insulation thickness of any Type THW or TW wires shall be 0.7 mm for conductor sizes No. 14 to No. 10, inclusive; 1.0 mm for No. 8; and 1.4 mm for No. 6 to No. 2, inclusive.

The sixth and seventh paragraphs of 86-2.12, "Wood Poles," of the Standard Specifications are amended to read:

• After fabrication, wood poles shall be pressure treated in conformance with the provisions in Section 58, "Preservative Treatment of Lumber, Timber and Piling," and AWPA Use Category System: UC4B, Commodity Specification D.

• Wood poles, when specified in the special provisions to be painted, shall be treated with waterborne wood preservatives.

The first paragraph of Section 86-2.15, "Galvanizing," of the Standard Specifications is amended to read:

• Galvanizing shall be in conformance with the provisions in Section 75-1.05, "Galvanizing," except that cabinets may be constructed of material galvanized prior to fabrication in conformance with the requirements in ASTM Designation: A 653/653M, Coating Designation G 90, in which case all cut or damaged edges shall be painted with at least 2 applications of approved unthinned zinc-rich primer (organic vehicle type) conforming to the provisions in Section 91, "Paint." Aerosol cans shall not be used. Other types of protective coating must be approved by the Engineer prior to installation.

Item B of the thirteenth paragraph of Section 86-2.16, "Painting," of the Standard Specifications is amended to read:

B. Salt Spray Resistance - The undercutting of the film of the coating system shall not exceed 3 mm average, from lines scored diagonally and deep enough to expose the base metal, after 336 hours exposure in a salt spray cabinet in conformance with the requirements in ASTM Designation: B 117.

The first paragraph of Section 86-4.01, "Vehicle Signal Faces," of the Standard Specifications is amended to read:

• Each vehicle signal face shall be of the adjustable type conforming to the requirements in Institute of Transportation Engineers (ITE) Publication: ST-017B, "Vehicle Traffic Control Signal Heads."

Subparagraphs 1 and 3 of the first paragraph of Section 86-4.01A, "Optical Units," of the Standard Specifications are amended to read:

- Lenses, reflectors, reflector assemblies, lamp receptacles, lamps, wiring and light distribution shall conform to the requirements in ITE Publication: ST-017B.

- All reflectors shall conform to the requirements in ITE Publication: ST-017B except that reflectors shall be made of silvered glass or of specular aluminum with an anodic coating. Reflector ring holder shall be made of cast aluminum.

The first paragraph of Section 86-4.01B, "Signal Sections," of the Standard Specifications is amended to read:

• Each signal section housing shall be either die-cast or permanent mold-cast aluminum conforming to ITE Publication: ST-017B or, when specified in the special provisions, shall be structural plastic.

The first paragraph of Section 86-4.01C, "Electrical Components," of the Standard Specifications is amended to read:

• Lamp receptacles and wiring shall conform to ITE Publication: ST-017B. The metal portion of the medium base lamp socket shall be brass, copper or phosphor bronze.

The first paragraph of Section 86-4.01D, "Visors," of the Standard Specifications is amended to read:

• Each signal section shall be provided with a removable visor conforming to the requirements in ITE Publication: ST-017B. Visors are classified, on the basis of lens enclosure, as full circle, tunnel (bottom open), or cap (bottom and lower sides open). Unless otherwise specified, visors shall be the tunnel type.

The first paragraph of Section 86-4.02A, "Physical and Mechanical Requirements," of the Standard Specifications is amended to read:

• Light emitting diode signal modules shall be designed as retrofit replacements for optical units of standard traffic signal sections and shall not require special tools for installation. Light emitting diode signal modules shall fit into existing traffic signal section housings built in conformance with the requirements in the Institute of Transportation Engineers (ITE) publication ST-017B, "Vehicle Traffic Control Signal Heads (VTCSH)" without modification to the housing.

The seventh paragraph of Section 86-4.02A, "Physical and Mechanical Requirements," of the Standard Specifications is amended to read:

• Light emitting diode signal modules shall be protected against dust and moisture intrusion in conformance with the requirements in NEMA Standard 250 for Type 4 enclosures to protect the internal components.

The first paragraph of Section 86-4.02B, "Photometric Requirements," of the Standard Specifications is amended to read:

• The minimum initial luminous intensity values for light emitting diode signal modules shall conform to the requirements in Section 11.04 of the Institute of Transportation Engineers (ITE) publication ST-017B, "Vehicle Traffic Control Signal Heads (VTCSH)" at 25°C.

The third paragraph of Section 86-4.02C, "Electrical," of the Standard Specifications is amended to read:

• The light emitting diode signal module on-board circuitry shall include voltage surge protection to withstand high-repetition noise transients as specified in Section 2.1.6 of NEMA Standard TS2.

Subparagraph 7 of the fourth paragraph of Section 86-4.02D(1), "Design Qualification Testing," of the Standard Specifications is amended to read:

- Moisture resistance testing shall be performed on light emitting diode signal modules in conformance with the requirements in NEMA Standard 250 for Type 4 enclosures. Evidence of internal moisture after testing shall be cause for rejection.

The second paragraph of Section 86-4.05, "Programmed Visibility Vehicle Signal Faces," of the Standard Specifications is amended to read:

• Each programmed visibility signal section shall provide a nominal 300-mm diameter circular or arrow indication. Color and arrow configuration shall conform to the requirements in ITE Publication: ST-017B.

The first paragraph of Section 86-4.06, "Pedestrian Signal Faces," of the Standard Specifications is amended to read:

• Message symbols for pedestrian signal faces shall be white WALKING PERSON and Portland orange UPRAISED HAND conforming to the requirements in the Institute of Transportation Engineers Standards: "Pedestrian Traffic Control Signal Indications" and "California MUTCD." The height of each symbol shall be not less than 250 mm and the width of each symbol shall be not less than 165 mm.

Subparagraph 3 of the first paragraph of Section 86-4.06A, "Types," of the Standard Specifications is amended to read:

- Each reflector assembly shall consist of a double reflector or 2 single reflectors. Each reflector shall be made of either aluminum or plastic. Reflectors shall conform to the requirements in Institute of Transportation Engineers Publication: ST-017B, "Vehicle Traffic Control Signal Heads." Plastic reflectors shall consist of molded or vacuum-formed plastic with a vacuum-deposited aluminum reflecting surface. The

plastic material shall not distort when the reflector is used with the lamp of the wattage normally furnished with the signal. In addition, the UL nonmechanical loading temperature of the material shall exceed, by at least 10°C, the maximum temperature in the signal section with the lamp "ON" and measured in an ambient air temperature of 25°C in conformance with the requirements in UL Publication UL 746B. Each completed reflector shall, when operated with the appropriate lamp and lens, provide the message brightness specified.

The tenth paragraph of Section 86-4.07, "Light Emitting Diode Pedestrian Signal Face 'Upraised Hand' Module," of the Standard Specifications is amended to read:

• The luminance of the "UPRAISED HAND" symbol shall be 3750 cd/m^2 minimum. The color of "UPRAISED HAND" shall be Portland orange conforming to the requirements of the Institute of Transportation Engineers Standards: "Pedestrian Traffic Control Signal Indications" and "California MUTCD." The height of each symbol shall be not less than 250 mm and the width of each symbol shall be not less than 165 mm.

The second paragraph of Section 86-4.07C, "Electrical," of the Standard Specifications is amended to read:

• On-board circuitry of the light emitting diode pedestrian signal modules shall include voltage surge protection to withstand high-repetition noise transients as stated in Section 2.1.6 of NEMA Standard TS2.

The second paragraph of Section 86-4.07D(1), "Design Qualification Testing," of the Standard Specifications is amended to read:

• A quantity of 2 units for each design shall be submitted for Design Qualification Testing. Test units shall be submitted to the Transportation Laboratory, after manufacturer's testing is complete.

Subparagraphs 5 and 7 of the fourth paragraph of Section 86-4.07D(1), "Design Qualification Testing," of the Standard Specifications are amended to read:

- Mechanical vibration testing shall be in conformance with the requirements in Military Specification MIL-STD-883, Test Method 2007, using three 4-minute cycles along each x, y and z axis, at a force of 2.5 Gs, with a frequency sweep from 2 Hz to 120 Hz. The loosening of the lens or of internal components, or other physical damage shall be cause for rejection.

- Moisture resistance testing shall be performed on modules mounted in a standard pedestrian signal housing in conformance to the requirements in NEMA Standard 250 for Type 4 enclosures. Evidence of internal moisture after testing shall be cause for rejection.

The cone penetration, flow, and resilience requirements in the table in the second paragraph under "Hot-Melt Rubberized Asphalt Sealant" of Section 86-5.01A(5), "Installation Details," of the Standard Specifications is amended to read:

Cone Penetration, 25°C, 150 g, 5 s	D 5329, Sec. 6	3.5 mm, max.
Flow, 60°C	D 5329, Sec. 8	5 mm, max.
Resilience, 25°C	D 5329, Sec. 12	25%, min.

The first paragraph in Section 86-5.01D, "Removing or Abandoning Existing Pressure-Sensitive Detectors," of the Standard Specifications is amended to read:

• When a foundation for a pressure-sensitive vehicle detector is to be removed, the hole left by removing the detector frame and foundation shall be filled with minor concrete, except the roadway surface shall be reconstructed with material to match existing surfacing. Minor concrete shall conform to the provisions in Section 90-10, "Minor Concrete," except that the concrete shall contain not less than 250 kilograms of cementitious material per cubic meter for asphalt concrete surfaced roadways and not less than 350 kilograms of cementitious material per cubic meter for portland cement concrete surfaced roadways.

The third paragraph under "Mounting Assemblies" of Section 86-6.065, "Internally Illuminated Street Name Signs," of the Standard Specifications is amended to read:

• At least 4.9 m of clearance shall be provided between the bottom of the fixture and the roadway.

The first paragraph of Section 86-8.01, "Payment," of the Standard Specifications is amended to read:

• The contract lump sum price or prices paid for signal, ramp metering, flashing beacon, lighting, sign illumination, traffic monitoring station, highway advisory radio systems, closed circuit television systems, or combinations thereof; for modifying or removing those systems; for temporary systems; or the lump sum or unit prices paid for various units of those systems; or the lump sum or per meter price paid for conduit of the various sizes, types and installation methods listed in the Engineer's Estimate shall include full compensation for furnishing all labor, materials, tools, equipment and incidentals, and for doing all the work involved in furnishing and installing, modifying, or removing the systems, combinations or units thereof, as shown on the plans, as specified in these specifications and the special provisions, and as directed by the Engineer, including any necessary pull boxes (except when the type required is shown as a separate contract item); excavation and backfill; concrete foundations (except when shown as a separate contract item); pedestrian barricades; furnishing and installing illuminated street name signs; installing sign panels on pedestrian barricades, on flashing beacon standards, and on traffic signal mast arms; restoring sidewalk, pavement and appurtenances damaged or destroyed during construction; salvaging existing materials; and making all required tests.

Section 86-8.01, "Payment," of the Standard Specifications is amended by adding the following paragraph after the first paragraph:

• If a portion or all of the poles for signal, lighting and electrical systems pursuant to Standard Specification Section 86, "Signals, Lighting and Electrical Systems," is fabricated more than 480 air line kilometers from both-Sacramento and Los Angeles, additional shop inspection expenses will be sustained by the State. Whereas it is and will be impracticable and extremely difficult to ascertain and determine the actual increase in such expenses, it is agreed that payment to the Contractor for furnishing such items from each fabrication site located more than 480 air

line kilometers from both Sacramento and Los Angeles will be reduced $5000; in addition, in the case where a fabrication site is located more than 4800 air line kilometers from both Sacramento and Los Angeles, payment will be reduced an additional $3000 per each fabrication site ($8000 total per site).

SECTION 88: ENGINEERING FABRIC

Issue Date: January 15, 2002

Section 88-1.02, "Pavement Reinforcing Fabric," of the Standard Specifications is amended to read:

• Pavement reinforcing fabric shall be 100 percent polypropylene staple fiber fabric material, needle-punched, thermally bonded on one side, and conform to the following:

Specification	Requirement
Weight, grams per square meter ASTM Designation: D 5261	140
Grab tensile strength (25-mm grip), kilonewtons, min. in each direction ASTM Designation: D 4632	0.45
Elongation at break, percent min. ASTM Designation: D 4632	50
Asphalt retention by fabric, grams per square meter. (Residual Minimum) ASTM Designation: D 6140	900

Note: Weight, grab, elongation and asphalt retention are based on Minimum Average Roll Value (MARV)

SECTION 90: PORTLAND CEMENT CONCRETE

Issue Date: March 16, 2007

Section 90, "Portland Cement Concrete," of the Standard Specifications is amended to read:

SECTION 90: PORTLAND CEMENT CONCRETE

90-1 GENERAL

90-1.01 DESCRIPTION

• Portland cement concrete shall be composed of cementitious material, fine aggregate, coarse aggregate, admixtures if used, and water, proportioned and mixed as specified in these specifications.

• The Contractor shall determine the mix proportions for concrete in conformance with these specifications.

• Class 1 concrete shall contain not less than 400 kg of cementitious material per cubic meter.

• Class 2 concrete shall contain not less than 350 kg of cementitious material per cubic meter.

• Class 3 concrete shall contain not less than 300 kg of cementitious material per cubic meter.

• Class 4 concrete shall contain not less than 250 kg of cementitious material per cubic meter.

- Minor concrete shall contain not less than 325 kg of cementitious material per cubic meter unless otherwise specified in these specifications or the special provisions.
- Unless otherwise designated on the plans or specified in these specifications or the special provisions, the amount of cementitious material used per cubic meter of concrete in structures or portions of structures shall conform to the following:

Use	Cementitious Material Content (kg/m^3)
Concrete designated by compressive strength:	
Deck slabs and slab spans of bridges	400 min., 475 max.
Roof sections of exposed top box culverts	400 min., 475 max.
Other portions of structures	350 min., 475 max.
Concrete not designated by compressive strength:	
Deck slabs and slab spans of bridges	400 min.
Roof sections of exposed top box culverts	400 min.
Prestressed members	400 min.
Seal courses	400 min.
Other portions of structures	350 min.
Concrete for precast members	350 min., 550 max.

- Whenever the 28-day compressive strength shown on the plans is greater than 25 MPa, the concrete shall be designated by compressive strength. If the plans show a 28-day compressive strength that is 28 MPa or greater, an additional 14 days will be allowed to obtain the specified strength. The 28-day compressive strengths shown on the plans that are 25 MPa or less are shown for design information only and are not a requirement for acceptance of the concrete.
- Concrete designated by compressive strength shall be proportioned such that the concrete will attain the strength shown on the plans or specified in the special provisions.
- Before using concrete for which the mix proportions have been determined by the Contractor, or in advance of revising those mix proportions, the Contractor shall submit in writing to the Engineer a copy of the mix design.
- Compliance with cementitious material content requirements will be verified in conformance with procedures described in California Test 518 for cement content. For testing purposes, supplementary cementitious material shall be considered to be cement. Batch proportions shall be adjusted as necessary to produce concrete having the specified cementitious material content.
- If any concrete has a cementitious material, portland cement, or supplementary cementitious material content that is less than the minimum required, the concrete shall be removed. However, if the Engineer determines that the concrete is structurally adequate, the concrete may remain in place and the Contractor shall pay to the State $0.55 for each kilogram of cementitious material, portland cement, or supplementary cementitious material that is less than the minimum required. The Department may deduct the amount from any moneys due, or that may become due, the Contractor under the contract. The deductions will not be made unless the difference between the contents required and those actually provided exceeds the batching tolerances permitted by Section 90-5, "Proportioning." No deductions will be made based on the results of California Test 518.
- The requirements of the preceding paragraph shall not apply to minor concrete or commercial quality concrete.

90-2 MATERIALS

90-2.01 CEMENTITIOUS MATERIALS

• Unless otherwise specified, cementitious material shall be either a combination of Type II or Type V portland cement and a supplementary cementitious material, or a blended cement.

• Cementitious materials used in cast-in-place concrete for exposed surfaces of like elements of a structure shall be from the same sources and of the same proportions.

• Cementitious materials shall be protected from moisture until used. Sacked cementitious materials shall be piled to permit access for tallying, inspecting, and identifying each shipment.

• Facilities shall be provided to ensure that cementitious materials meeting this Section 90-2.01 are kept separate from other cementitious materials. Sampling cementitious materials shall be in conformance with California Test 125.

• The Contractor shall furnish a Certificate of Compliance for cementitious materials in conformance with the provisions in Section 6-1.07, "Certificates of Compliance." The Certificate of Compliance shall indicate the source by name and location (including country, state, and city). If cementitious material is delivered directly to the job site, the Certificate of Compliance shall be signed by the cementitious material supplier. If the cementitious material is used in ready-mixed concrete or in precast concrete products purchased as such by the Contractor, the Certificate of Compliance shall be signed by the manufacturer of the concrete or product.

90-2.01A CEMENT

• Portland cement shall conform to the requirements in ASTM Designation: C 150 except, using a 10-sample moving average, limestone shall not exceed 2.5 percent. The C_3S content of Type II cement shall not exceed 65 percent.

• Blended cement shall conform to the requirements for Portland Blast-Furnace Slag, Cement Type IS (MS) or Portland-Pozzolan Cement, Type IP (MS) in AASHTO Designation: M 240 and shall be comprised of an intimate and uniform blend of Type II or Type V cement and supplementary cementitious material in an amount conforming to the requirements in Section 90-2.01C, "Required Use of Supplementary Cementitious Materials."

• In addition, blended cement, Type II portland cement, and Type V portland cement shall conform to the following requirements:

A. The cement shall not contain more than 0.60-percent by mass of alkalies, calculated as the percentage of Na_2O plus 0.658 times the percentage of K_2O, when determined by methods as required in AASHTO Designation: T 105;
B. The autoclave expansion shall not exceed 0.50-percent; and
C. Mortar, containing the cement to be used and Ottawa sand, when tested in conformance with California Test 527, shall not expand in water more than 0.010-percent and shall not contract in air more than 0.048-percent, except that when cement is to be used for precast prestressed concrete piling, precast prestressed concrete members, or steam cured concrete products, the mortar shall not contract in air more than 0.053-percent.

• Type III portland cement shall be used only as specified in the special provisions or with the approval of the Engineer. Type III portland cement shall conform to the additional requirements listed above for Type II portland cement, except when tested in conformance with California Test 527, mortar containing Type III portland cement shall not contract in air more than 0.075-percent.

90-2.01B SUPPLEMENTARY CEMENTITIOUS MATERIALS (SCM)

• Fly ash shall conform to the requirements in AASHTO Designation: M 295, Class F, and the following:

A. Calcium oxide content shall not exceed 10 percent.
B. The available alkali, as sodium oxide equivalent, shall not exceed 1.5 percent when determined in conformance with the requirements in ASTM Designation: C 311 or the total alkali, as sodium oxide equivalent, shall not exceed 5.0 percent when determined in conformance with the requirements in AASHTO Designation: T 105.
C. Commingling of fly ash from different sources at uncontrolled ratios is permissible only if the following criteria are satisfied:

1. Sources of fly ash to be commingled shall be on the approved list of materials for use in concrete.
2. Testing of the commingled product is the responsibility of the fly ash supplier.
3. Each fly ash's running average of density shall not differ from any other by more than $0.25 g/cm^3$ at the time of commingling.
4. Each fly ash's running average of loss on ignition shall not differ from any other by more than one percent at the time of commingling.
5. The final product of commingled fly ash shall conform to the requirement in AASHTO Designation: M 295.

• Raw or calcined natural pozzolans shall conform to the requirements in AASHTO Designation: M 295, Class N and the following requirements:

A. Calcium oxide content shall not exceed 10 percent.
B. The available alkali, as sodium oxide equivalent, shall not exceed 1.5 percent when determined in conformance with the requirements in ASTM Designation: C 311 or the total alkali, as sodium oxide equivalent, shall not exceed 5.0 percent when determined in conformance with the requirements in AASHTO Designation: T 105.

• Ground Granulated Blast Furnace Slag (GGBFS) shall conform to the requirements in AASHTO Designation: M 302, Grade 100 or Grade 120.

• Silica Fume shall conform to the requirements of AASHTO Designation: M 307 with reduction in mortar expansion of 80 percent, minimum, using the cement from the proposed mix design.

90-2.01C REQUIRED USE OF SUPPLEMENTARY CEMENTITIOUS MATERIALS

• The amount of portland cement and SCM used in portland cement concrete shall conform to the minimum cementitious material content provisions in Section 90-1.01, "Description," or Section 90-4.05, "Optional Use of Chemical Admixtures," and the following:

A. If a blended cement conforming to the provisions in Section 90-2.01A, "Cement," is used, the minimum amount of SCM incorporated into the cement shall conform to the provisions in this Section 90-2.01C.
B. Fly ash or natural pozzolan, silica fume, or GGBFS shall not be used with Type IP or Type IS cements.

• Use of SCMs shall conform to the following:

A. If fly ash or natural pozzolan is used:

1. The minimum amount of portland cement shall not be less than 75 percent by mass of the specified minimum cementitious material content.
2. The minimum amount of fly ash or natural pozzolan shall be:
   a. Fifteen percent by mass of the total amount of cementitious material if the calcium oxide content of fly ash or natural pozzolan is equal to or less than 2 percent by mass;
   b. Twenty-five percent by mass of the total amount of cementitious material if the calcium oxide content of fly ash or natural pozzolan is greater than 2 percent by mass.

B. The total amount of fly ash or natural pozzolan shall not exceed 35 percent by mass of the total amount of cementitious material to be used in the mix. If Section 90-1.01, "Description," specifies a maximum cementitious material content in kilograms per cubic meter, the total mass of portland cement and fly ash or natural pozzolan per cubic meter shall not exceed the specified maximum cementitious material content.

C. If silica fume is used:

1. The amount of silica fume shall not be less than 10 percent by mass of the total amount of cementitious material.
2. The amount of portland cement shall not be less than 75 percent by mass of the specified minimum cementitious material content.
3. If Section 90-1.01, "Description," specifies a maximum cementitious material content in kilograms per cubic meter, the total mass of portland cement and silica fume per cubic meter shall not exceed the specified maximum cementitious material content.

D. If GGBFS is used:

1. The minimum amount of GGBFS shall be either:
   a. Forty percent of the total cementitious material to be used, if the aggregates used in the concrete are on the Department's list of "Approved Aggregates For Use in Concrete with Reduced Fly Ash."
   b. No less than 50 percent.
2. The amount of GGBFS shall not exceed 60 percent by mass of the total amount of cementitious materials to be used.

90-2.02 AGGREGATES

• Aggregates shall be free from deleterious coatings, clay balls, roots, bark, sticks, rags, and other extraneous material.

• The Contractor shall provide safe and suitable facilities, including necessary splitting devices for obtaining samples of aggregates, in conformance with California Test 125.

• Aggregates shall be of such character that it will be possible to produce workable concrete within the limits of water content provided in Section 90-6.06, "Amount of Water and Penetration."

• Aggregates shall have not more than 10 percent loss when tested for soundness in conformance with the requirements in California Test 214. The soundness requirement for fine

aggregate will be waived, provided that the durability index, D_f, of the fine aggregate is 60 or greater when tested for durability in conformance with California Test 229.

- If the results of any one or more of the Cleanness Value, Sand Equivalent, or aggregate grading tests do not meet the requirements specified for "Operating Range" but all meet the "Contract Compliance" requirements, the placement of concrete shall be suspended at the completion of the current pour until tests or other information indicate that the next material to be used in the work will comply with the requirements specified for "Operating Range."
- If the results of either or both the Cleanness Value and coarse aggregate grading tests do not meet the requirements specified for "Contract Compliance," the concrete that is represented by the tests shall be removed. However, if the Engineer determines that the concrete is structurally adequate, the concrete may remain in place, and the Contractor shall pay to the State $4.60 per cubic meter for paving concrete and $7.20 per cubic meter for all other concrete for the concrete represented by these tests and left in place. The Department may deduct the amount from any moneys due, or that may become due, the Contractor under the contract.
- If the results of either or both the Sand Equivalent and fine aggregate grading tests do not meet the requirements specified for "Contract Compliance," the concrete that is represented by the tests shall be removed. However, if the Engineer determines that the concrete is structurally adequate, the concrete may remain in place and the Contractor shall pay to the State $4.60 per cubic meter for paving concrete and $7.20 per cubic meter for all other concrete for the concrete represented by these tests and left in place. The Department may deduct the amount from any moneys due, or that may become due, the Contractor under the contract.
- The 2 preceding paragraphs apply individually to the "Contract Compliance" requirements for coarse aggregate and fine aggregate. When both coarse aggregate and fine aggregate do not conform to the "Contract Compliance" requirements, both paragraphs shall apply. The payments specified in those paragraphs are in addition to any payments made in conformance with the provisions in Section 90-1.01, "Description."
- No single Cleanness Value, Sand Equivalent, or aggregate grading test shall represent more than 250 m^3 of concrete or one day's pour, whichever is smaller.
- When the source of an aggregate is changed, the Contractor shall adjust the mix proportions and submit in writing to the Engineer a copy of the mix design before using the aggregates.

90-2.02A COARSE AGGREGATE

- Coarse aggregate shall consist of gravel, crushed gravel, crushed rock, reclaimed aggregate, crushed air-cooled iron blast furnace slag or combinations thereof. Crushed air-cooled blast furnace slag shall not be used in reinforced or prestressed concrete.
- Reclaimed aggregate is aggregate that has been recovered from plastic concrete by washing away the cementitious material. Reclaimed aggregate shall conform to all aggregate requirements.
- Coarse aggregate shall conform to the following quality requirements:

Tests	California Test	Requirements
Loss in Los Angeles Rattler (after 500 revolutions)	211	45% max.
Cleanness Value		
Operating Range	227	75 min.
Contract Compliance	227	71 min.

• In lieu of the above Cleanness Value requirements, a Cleanness Value "Operating Range" limit of 71, minimum, and a Cleanness Value "Contract Compliance" limit of 68, minimum, will be used to determine the acceptability of the coarse aggregate if the Contractor furnishes a Certificate of Compliance, as provided in Section 6-1.07, "Certificates of Compliance," certifying that:

A. Coarse aggregate sampled at the completion of processing at the aggregate production plant had a Cleanness Value of not less than 82 when tested in conformance with the requirements in California Test 227; and
B. Prequalification tests performed in conformance with the requirements in California Test 549 indicated that the aggregate would develop a relative strength of not less than 95 percent and would have a relative shrinkage not greater than 105 percent, based on concrete.

90-2.02B FINE AGGREGATE

• Fine aggregate shall consist of natural sand, manufactured sand produced from larger aggregate or a combination thereof. Manufactured sand shall be well graded.

• Fine aggregate shall conform to the following quality requirements:

Test	California Test	Requirements
Organic Impurities	213	Satisfactory[a]
Mortar Strengths Relative to Ottawa Sand	515	95%, min.
Sand Equivalent:		
Operating Range	217	75, min.
Contract Compliance	217	71, min.

a Fine aggregate developing a color darker than the reference standard color solution may be accepted if it is determined by the Engineer, from mortar strength tests, that a darker color is acceptable.

• In lieu of the above Sand Equivalent requirements, a Sand Equivalent "Operating Range" limit of 71, minimum, and a Sand Equivalent "Contract Compliance" limit of 68, minimum, will be used to determine the acceptability of the fine aggregate if the Contractor furnishes a Certificate of Compliance, as provided in Section 6-1.07, "Certificates of Compliance," certifying that:

A. Fine aggregate sampled at the completion of processing at the aggregate production plant had a Sand Equivalent value of not less than 82 when tested by California Test 217; and
B. Prequalification tests performed in conformance with California Test 549 indicated that the aggregate would develop a relative strength of not less than 95 percent and would have a relative shrinkage not greater than 105 percent, based on concrete.

90-2.03 WATER

• In conventionally reinforced concrete work, the water for curing, for washing aggregates, and for mixing shall be free from oil and shall not contain more than 1000 parts per million of chlorides as Cl, when tested in conformance with California Test 422, nor more than 1300 parts per million of sulfates as SO_4, when tested in conformance with California Test 417. In prestressed concrete work, the water for curing, for washing aggregates, and for mixing shall be free from oil and shall not contain more than 650 parts per million of chlorides as Cl, when tested in conformance with California Test 422, nor more than 1300 parts per million of sulfates

as SO_4, when tested in conformance with California Test 417. In no case shall the water contain an amount of impurities that will cause either: 1) a change in the setting time of cement of more than 25 percent when tested in conformance with the requirements in ASTM Designation: C 191 or ASTM Designation: C 266 or 2) a reduction in the compressive strength of mortar at 14 days of more than 5 percent, when tested in conformance with the requirements in ASTM Designation: C 109, when compared to the results obtained with distilled water or deionized water, tested in conformance with the requirements in ASTM Designation: C 109.

- In nonreinforced concrete work, the water for curing, for washing aggregates and for mixing shall be free from oil and shall not contain more than 2000 parts per million of chlorides as Cl, when tested in conformance with California Test 422, or more than 1500 parts per million of sulfates as SO_4, when tested in conformance with California Test 417.
- In addition to the above provisions, water for curing concrete shall not contain impurities in a sufficient amount to cause discoloration of the concrete or produce etching of the surface.
- Water reclaimed from mixer wash-out operations may be used in mixing concrete. The water shall not contain coloring agents or more than 300 parts per million of alkalis ($Na_2O + 0.658\ K_2O$) as determined on the filtrate. The specific gravity of the water shall not exceed 1.03 and shall not vary more than ±0.010 during a day's operations.

90-2.04 ADMIXTURE MATERIALS

- Admixture materials shall conform to the requirements in the following ASTM Designations:

A. Chemical Admixtures—ASTM Designation: C 494.
B. Air-entraining Admixtures—ASTM Designation: C 260.

90-3 AGGREGATE GRADINGS

90-3.01 GENERAL

- Before beginning concrete work, the Contractor shall submit in writing to the Engineer the gradation of the primary aggregate nominal sizes that the Contractor proposes to furnish. If a primary coarse aggregate or the fine aggregate is separated into 2 or more sizes, the proposed gradation shall consist of the gradation for each individual size, and the proposed proportions of each individual size, combined mathematically to indicate one proposed gradation. The proposed gradation shall meet the grading requirements shown in the table in this section, and shall show the percentage passing each of the sieve sizes used in determining the end result.
- The Engineer may waive, in writing, the gradation requirements in this Section 90-3.01 and in Sections 90-3.02, "Coarse Aggregate Grading," 90-3.03, "Fine Aggregate Grading," and 90-3.04, "Combined Aggregate Gradings," if, in the Engineer's opinion, furnishing the gradation is not necessary for the type or amount of concrete work to be constructed.
- Gradations proposed by the Contractor shall be within the following percentage passing limits:

Primary Aggregate Nominal Size	Sieve Size	Limits of Proposed Gradation
37.5-mm x 19-mm	25-mm	19 - 41
25-mm x 4.75-mm	19-mm	52 - 85
25-mm x 4.75-mm	9.5-mm	15 - 38
12.5-mm x 4.75-mm	9.5-mm	40 - 78
9.5-mm x 2.36-mm	9.5-mm	50 - 85
Fine Aggregate	1.18-mm	55 - 75
Fine Aggregate	600-µm	34 - 46
Fine Aggregate	300-µm	16 - 29

• Should the Contractor change the source of supply, the Contractor shall submit in writing to the Engineer the new gradations before their intended use.

90-3.02 COARSE AGGREGATE GRADING

• The grading requirements for coarse aggregates are shown in the following table for each size of coarse aggregate:

	Percentage Passing Primary Aggregate Nominal Sizes							
	37.5-mm x 19-mm		25-mm x 4.75-mm		12.5-mm x 4.75-mm		9.5-mm x 2.36-mm	
Sieve Sizes	Operating Range	Contract Compliance	Operating Range	Contract Compliance	Operating Range	Contract Compliance	Operating Range	Contract Compliance
50-mm	100	100	—	—	—	—	—	—
37.5-mm	88 - 100	85 - 100	100	100	—	—	—	—
25-mm	X ±18	X ±25	88 - 100	86 - 100	—	—	—	—
19-mm	0 - 17	0 - 20	X ±15	X ±22	100	100	—	—
12.5-mm	—	—	—	—	82 - 100	80 - 100	100	100
9.5-mm	0 - 7	0 - 9	X ±15	X ±22	X ±15	X ±22	X ±15	X ±20
4.75-mm	—	—	0 - 16	0 - 18	0 - 15	0 - 18	0 - 25	0 - 28
2.36-mm	—	—	0 - 6	0 - 7	0 - 6	0 - 7	0 - 6	0 - 7

• In the above table, the symbol X is the gradation that the Contractor proposes to furnish for the specific sieve size as provided in Section 90-3.01, "General."

• Coarse aggregate for the 37.5-mm, maximum, combined aggregate grading as provided in Section 90-3.04, "Combined Aggregate Gradings," shall be furnished in 2 or more primary aggregate nominal sizes. Each primary aggregate nominal size may be separated into 2 sizes and stored separately, provided that the combined material conforms to the grading requirements for that particular primary aggregate nominal size.

• When the 25-mm, maximum, combined aggregate grading as provided in Section 90-3.04, "Combined Aggregate Gradings," is to be used, the coarse aggregate may be separated into 2 sizes and stored separately, provided that the combined material shall conform to the grading requirements for the 25-mm x 4.75-mm primary aggregate nominal size.

90-3.03 FINE AGGREGATE GRADING

• Fine aggregate shall be graded within the following limits:

Sieve Sizes	Percentage Passing	
	Operating Range	Contract Compliance
9.5-mm	100	100
4.75-mm	95 - 100	93 - 100
2.36-mm	65 - 95	61 - 99
1.18-mm	X ±10	X ±13
600-µm	X ±9	X ±12
300-µm	X ±6	X ±9
150-µm	2 - 12	1 - 15
75-µm	0 - 8	0 - 10

- In the above table, the symbol X is the gradation that the Contractor proposes to furnish for the specific sieve size as provided in Section 90-3.01, "General."
- In addition to the above required grading analysis, the distribution of the fine aggregate sizes shall be such that the difference between the total percentage passing the 1.18-mm sieve and the total percentage passing the 600-µm sieve shall be between 10 and 40, and the difference between the percentage passing the 600-µm and 300-µm sieves shall be between 10 and 40.
- Fine aggregate may be separated into 2 or more sizes and stored separately, provided that the combined material conforms to the grading requirements specified in this Section 90-3.03.

90-3.04 COMBINED AGGREGATE GRADINGS

- Combined aggregate grading limits shall be used only for the design of concrete mixes. Concrete mixes shall be designed so that aggregates are combined in proportions that shall produce a mixture within the grading limits for combined aggregates as specified herein.
- The combined aggregate grading, except when otherwise specified in these specifications or the special provisions, shall be either the 37.5-mm, maximum grading, or the 25-mm, maximum grading, at the option of the Contractor.

Grading Limits of Combined Aggregates

Sieve Sizes	Percentage Passing			
	37.5-mm Max.	25-mm Max.	12.5-mm Max.	9.5-mm Max.
50-mm	100	—	—	—
37.5-mm	90 - 100	100	—	—
25-mm	50 - 86	90 - 100	—	—
19-mm	45 - 75	55 - 100	100	—
12.5-mm	—	—	90-100	100
9.5-mm	38 - 55	45 - 75	55 - 86	50 - 100
4.75-mm	30 - 45	35 - 60	45 - 63	45 - 63
2.36-mm	23 - 38	27 - 45	35 - 49	35 - 49
1.18-mm	17 - 33	20 - 35	25 - 37	25 - 37
600-µm	10 - 22	12 - 25	15 - 25	15 - 25
300-µm	4 - 10	5 - 15	5 - 15	5 - 15
150-µm	1 - 6	1 - 8	1 - 8	1 - 8
75-µm	0 - 3	0 - 4	0 - 4	0 - 4

- Changes from one grading to another shall not be made during the progress of the work unless permitted by the Engineer.

90-4 ADMIXTURES

90-4.01 GENERAL

- Admixtures used in portland cement concrete shall conform to and be used in conformance with the provisions in this Section 90-4 and the special provisions. Admixtures

shall be used when specified or ordered by the Engineer and may be used at the Contractor's option as provided herein.

- Chemical admixtures and air-entraining admixtures containing chlorides as Cl in excess of one percent by mass of admixture, as determined by California Test 415, shall not be used.
- Admixtures shall be uniform in properties throughout their use in the work. Should it be found that an admixture as furnished is not uniform in properties, its use shall be discontinued.
- If more than one admixture is used, the admixtures shall be compatible with each other so that the desirable effects of all admixtures used will be realized.
- Chemical admixtures shall be used in conformance with the manufacturer's written recommendations.

90-4.02 MATERIALS

- Admixture materials shall conform to the provisions in Section 90–2.04, "Admixture Materials."

90-4.03 ADMIXTURE APPROVAL

- No admixture brand shall be used in the work unless it is on the Department's current list of approved brands for the type of admixture involved.
- Admixture brands will be considered for addition to the approved list if the manufacturer of the admixture submits to the Transportation Laboratory a sample of the admixture accompanied by certified test results demonstrating that the admixture complies with the requirements in the appropriate ASTM Designation and these specifications. The sample shall be sufficient to permit performance of all required tests. Approval of admixture brands will be dependent upon a determination as to compliance with the requirements, based on the certified test results submitted, together with tests the Department may elect to perform.
- If the Contractor proposes to use an admixture of a brand and type on the current list of approved admixture brands, the Contractor shall furnish a Certificate of Compliance from the manufacturer, as provided in Section 6-1.07, "Certificates of Compliance," certifying that the admixture furnished is the same as that previously approved. If a previously approved admixture is not accompanied by a Certificate of Compliance, the admixture shall not be used in the work until the Engineer has had sufficient time to make the appropriate tests and has approved the admixture for use. The Engineer may take samples for testing at any time, whether or not the admixture has been accompanied by a Certificate of Compliance.

90-4.04 REQUIRED USE OF CHEMICAL ADMIXTURES

- If the use of a chemical admixture is specified, the admixture shall be used at the dosage specified, except that if no dosage is specified, the admixture shall be used at the dosage normally recommended by the manufacturer of the admixture.

90-4.05 OPTIONAL USE OF CHEMICAL ADMIXTURES

- The Contractor may use Type A or F, water-reducing; Type B, retarding; or Type D or G, water-reducing and retarding admixtures as described in ASTM Designation: C 494 to conserve cementitious material or to facilitate any concrete construction application subject to the following conditions:

A. If a water-reducing admixture or a water-reducing and retarding admixture is used, the cementitious material content specified or ordered may be reduced by a maximum of

5 percent by mass, except that the resultant cementitious material content shall be not less than 300 kilograms per cubic meter; and

B. When a reduction in cementitious material content is made, the dosage of admixture used shall be the dosage used in determining approval of the admixture.

• Unless otherwise specified, a Type C accelerating chemical admixture conforming to the requirements in ASTM Designation: C 494, may be used in portland cement concrete. Inclusion in the mix design submitted for approval will not be required provided that the admixture is added to counteract changing conditions that contribute to delayed setting of the portland cement concrete, and the use or change in dosage of the admixture is approved in writing by the Engineer.

90-4.06 REQUIRED USE OF AIR-ENTRAINING ADMIXTURES

• When air-entrainment is specified or ordered by the Engineer, the air-entraining admixture shall be used in amounts to produce a concrete having the specified air content as determined by California Test 504.

90-4.07 OPTIONAL USE OF AIR-ENTRAINING ADMIXTURES

• When air-entrainment has not been specified or ordered by the Engineer, the Contractor will be permitted to use an air-entraining admixture to facilitate the use of any construction procedure or equipment provided that the average air content, as determined by California Test 504, of 3 successive tests does not exceed 4 percent, and no single test value exceeds 5.5 percent. If the Contractor elects to use an air-entraining admixture in concrete for pavement, the Contractor shall so indicate at the time the Contractor designates the source of aggregate.

90-4.08 BLANK

90-4.09 BLANK

90-4.10 PROPORTIONING AND DISPENSING LIQUID ADMIXTURES

• Chemical admixtures and air-entraining admixtures shall be dispensed in liquid form. Dispensers for liquid admixtures shall have sufficient capacity to measure at one time the prescribed quantity required for each batch of concrete. Each dispenser shall include a graduated measuring unit into which liquid admixtures are measured to within ±5 percent of the prescribed quantity for each batch. Dispensers shall be located and maintained so that the graduations can be accurately read from the point at which proportioning operations are controlled to permit a visual check of batching accuracy prior to discharge. Each measuring unit shall be clearly marked for the type and quantity of admixture.

• Each liquid admixture dispensing system shall be equipped with a sampling device consisting of a valve located in a safe and readily accessible position such that a sample of the admixture may be withdrawn slowly by the Engineer.

• If more than one liquid admixture is used in the concrete mix, each liquid admixture shall have a separate measuring unit and shall be dispensed by injecting equipment located in such a manner that the admixtures are not mixed at high concentrations and do not interfere with the effectiveness of each other. When air-entraining admixtures are used in conjunction with other liquid admixtures, the air-entraining admixture shall be the first to be incorporated into the mix, unless it is demonstrated that a different sequence improves performance.

• When automatic proportioning devices are required for concrete pavement, dispensers for liquid admixtures shall operate automatically with the batching control equipment. The dispensers shall be equipped with an automatic warning system in good operating condition that will provide a visible or audible signal at the point at which proportioning operations are controlled when the quantity of admixture measured for each batch of concrete varies from the preselected dosage by more than 5 percent, or when the entire contents of the measuring unit are not emptied from the dispenser into each batch of concrete.

• Unless liquid admixtures are added to premeasured water for the batch, their discharge into the batch shall be arranged to flow into the stream of water so that the admixtures are well dispersed throughout the batch, except that air-entraining admixtures may be dispensed directly into moist sand in the batching bins provided that adequate control of the air content of the concrete can be maintained.

• Liquid admixtures requiring dosages greater than 2.5 L/m^3 shall be considered to be water when determining the total amount of free water as specified in Section 90-6.06, "Amount of Water and Penetration."

90-4.11 BLANK

90-5 PROPORTIONING

90-5.01 STORAGE OF AGGREGATES

• Aggregates shall be stored or stockpiled in such a manner that separation of coarse and fine particles of each size shall be avoided and the various sizes shall not become intermixed before proportioning.

• Aggregates shall be stored or stockpiled and handled in a manner that prevent contamination by foreign materials. In addition, storage of aggregates at batching or mixing facilities that are erected subsequent to the award of the contract and that furnish concrete to the project shall conform to the following:

A. Intermingling of the different sizes of aggregates shall be positively prevented. The Contractor shall take the necessary measures to prevent intermingling. The preventive measures may include, but are not necessarily limited to, physical separation of stockpiles or construction of bulkheads of adequate length and height; and
B. Contamination of aggregates by contact with the ground shall be positively prevented. The Contractor shall take the necessary measures to prevent contamination. The preventive measures shall include, but are not necessarily limited to, placing aggregates on wooden platforms or on hardened surfaces consisting of portland cement concrete, asphalt concrete, or cement treated material.

• In placing aggregates in storage or in moving the aggregates from storage to the weigh hopper of the batching plant, any method that may cause segregation, degradation, or the combining of materials of different gradings that will result in any size of aggregate at the weigh hopper failing to meet the grading requirements shall be discontinued. Any method of handling aggregates that results in excessive breakage of particles shall be discontinued. The use of suitable devices to reduce impact of falling aggregates may be required by the Engineer.

90-5.02 PROPORTIONING DEVICES

• Weighing, measuring, or metering devices used for proportioning materials shall conform to the requirements in Section 9-1.01, "Measurement of Quantities," and this Section 90-5.02. In

addition, automatic weighing systems shall comply with the requirements for automatic proportioning devices in Section 90-5.03A, "Proportioning for Pavement." Automatic devices shall be automatic to the extent that the only manual operation required for proportioning the aggregates, cement, and supplementary cementitious material for one batch of concrete is a single operation of a switch or starter.

• Proportioning devices shall be tested as frequently as the Engineer may deem necessary to ensure their accuracy.

• Weighing equipment shall be insulated against vibration or movement of other operating equipment in the plant. When the plant is in operation, the mass of each batch of material shall not vary from the mass designated by the Engineer by more than the tolerances specified herein.

• Equipment for cumulative weighing of aggregate shall have a zero tolerance of ±0.5 percent of the designated total batch mass of the aggregate. For systems with individual weigh hoppers for the various sizes of aggregate, the zero tolerance shall be ±0.5 percent of the individual batch mass designated for each size of aggregate. Equipment for cumulative weighing of cement and supplementary cementitious material shall have a zero tolerance of ±0.5 percent of the designated total batch mass of the cement and supplementary cementitious material. Equipment for weighing cement or supplementary cementitious material separately shall have a zero tolerance of ±0.5 percent of their designated individual batch masses. Equipment for measuring water shall have a zero tolerance of ±0.5 percent of its designated mass or volume.

• The mass indicated for any batch of material shall not vary from the preselected scale setting by more than the following:

A. Aggregate weighed cumulatively shall be within 1.0 percent of the designated total batch mass of the aggregate. Aggregates weighed individually shall be within 1.5 percent of their respective designated batch masses; and
B. Cement shall be 99 to 102 percent of its designated batch mass. When weighed individually, supplementary cementitious material shall be 99 to 102 percent of its designated batch mass. When supplementary cementitious material and cement are permitted to be weighed cumulatively, cement shall be weighed first to 99 to 102 percent of its designated batch mass, and the total for cement and supplementary cementitious material shall be 99 to 102 percent of the sum of their designated batch masses; and
C. Water shall be within 1.5 percent of its designated mass or volume.

• Each scale graduation shall be approximately 0.001 of the total capacity of the scale. The capacity of scales for weighing cement, supplementary cementitious material, or cement plus supplementary cementitious material and aggregates shall not exceed that of commercially available scales having single graduations indicating a mass not exceeding the maximum permissible mass variation above, except that no scale shall be required having a capacity of less than 500 kg, with 0.5-kg graduations.

90-5.03 PROPORTIONING

• Proportioning shall consist of dividing the aggregates into the specified sizes, each stored in a separate bin, and combining them with cementitious material and water as provided in these specifications. Aggregates shall be proportioned by mass.

• At the time of batching, aggregates shall have been dried or drained sufficiently to result in a stable moisture content such that no visible separation of water from aggregate will take place during transportation from the proportioning plant to the point of mixing. In no event shall the free moisture content of the fine aggregate at the time of batching exceed 8 percent of its saturated, surface-dry mass.

- Should separate supplies of aggregate material of the same size group, but of different moisture content or specific gravity or surface characteristics affecting workability, be available at the proportioning plant, withdrawals shall be made from one supply exclusively and the materials therein completely exhausted before starting upon another.
- Bulk Type IP (MS) cement shall be weighed in an individual hopper and shall be kept separate from the aggregates until the ingredients are released for discharge into the mixer.
- Bulk cement and supplementary cementitious material may be weighed in separate, individual weigh hoppers or may be weighed in the same weigh hopper and shall be kept separate from the aggregates until the ingredients are released for discharge into the mixer. If the cement and supplementary cementitious material are weighed cumulatively, the cement shall be weighed first.
- If cement and supplementary cementitious material are weighed in separate weigh hoppers, the weigh systems for the proportioning of the aggregate, the cement, and the supplementary cementitious material shall be individual and distinct from all other weigh systems. Each weigh system shall be equipped with a hopper, a lever system, and an indicator to constitute an individual and independent material weighing device. The cement and the supplementary cementitious material shall be discharged into the mixer simultaneously with the aggregate.
- The scales and weigh hoppers for bulk weighing cement, supplementary cementitious material, or cement plus supplementary cementitious material shall be separate and distinct from the aggregate weighing equipment.
- For batches of one cubic meter or more, the batching equipment shall conform to one of the following combinations:

A. Separate boxes and separate scale and indicator for weighing each size of aggregate.
B. Single box and scale indicator for all aggregates.
C. Single box or separate boxes and automatic weighing mechanism for all aggregates.

- In order to check the accuracy of batch masses, the gross mass and tare mass of batch trucks, truck mixers, truck agitators, and non-agitating hauling equipment shall be determined when ordered by the Engineer. The equipment shall be weighed on scales designated by the Engineer.

90-5.03A PROPORTIONING FOR PAVEMENT

- Aggregates and bulk supplementary cementitious material for use in pavement shall be proportioned by mass by means of automatic proportioning devices of approved type conforming to these specifications.
- The Contractor shall install and maintain in operating condition an electronically actuated moisture meter that will indicate, on a readily visible scale, changes in the moisture content of the fine aggregate as it is batched within a sensitivity of 0.5 percent by mass of the fine aggregate.
- The batching of cement, supplementary cementitious material, or cement plus supplementary cementitious material and aggregate shall be interlocked so that a new batch cannot be started until all weigh hoppers are empty, the proportioning devices are within zero tolerance, and the discharge gates are closed. The interlock shall permit no part of the batch to be discharged until all aggregate hoppers and the cement and supplementary cementitious material hoppers or the cement plus supplementary cementitious material hopper are charged with masses that are within the tolerances specified in Section 90-5.02, "Proportioning Devices."

- If interlocks are required for cement and supplementary cementitious material charging mechanisms and cement and supplementary cementitious material are weighed cumulatively, their charging mechanisms shall be interlocked to prevent the introduction of mineral admixture until the mass of cement in the cement weigh hopper is within the tolerances specified in Section 90-5.02, "Proportioning Devices."
- If concrete is completely mixed in stationary paving mixers, the supplementary cementitious materials shall be weighed in a separate weigh hopper and the supplementary cementitious material and cement shall be introduced simultaneously into the mixer proportionately with the aggregate. If the Contractor provides certification that the stationary mixer is capable of mixing the cement, supplementary cementitious material, aggregates, and water uniformly before discharge, weighing the supplementary cementitious material cumulatively with the cement is permitted. Certification shall contain the following:

A. Test results for 2 compressive strength test cylinders of concrete taken within the first one-third and 2 compressive strength test cylinders of concrete taken within the last one-third of the concrete discharged from a single batch from the stationary paving mixer. Strength tests and cylinder preparation will be in conformance with the provisions of Section 90-9, "Compressive Strength";
B. Calculations demonstrating that the difference in the averages of 2 compressive strengths taken in the first one-third is no greater than 7.5 percent different than the averages of 2 compressive strengths taken in the last one-third of the concrete discharged from a single batch from the stationary paving mixer. Strength tests and cylinder preparation will be in conformance with the provisions of Section 90-9, "Compressive Strength;" and
C. The mixer rotation speed and time of mixing before discharge that are required to produce a mix that meets the requirements above.

- The discharge gate on the cement and supplementary cementitious material hoppers or the cement plus supplementary cementitious material hopper shall be designed to permit regulating the flow of cement, supplementary cementitious material, or cement plus supplementary cementitious material into the aggregate as directed by the Engineer.
- If separate weigh boxes are used for each size of aggregate, the discharge gates shall permit regulating the flow of each size of aggregate as directed by the Engineer.
- Material discharged from the several bins shall be controlled by gates or by mechanical conveyors. The means of withdrawal from the several bins, and of discharge from the weigh box, shall be interlocked so that not more than one bin can discharge at a time, and so that the weigh box cannot be tripped until the required quantity from each of the several bins has been deposited therein. Should a separate weigh box be used for each size of aggregate, all may be operated and discharged simultaneously.
- If the discharge from the several bins is controlled by gates, each gate shall be actuated automatically so that the required mass is discharged into the weigh box, after which the gate shall automatically close and lock.
- The automatic weighing system shall be designed so that all proportions required may be set on the weighing controller at the same time.

90-6 MIXING AND TRANSPORTING

90-6.01 GENERAL

- Concrete shall be mixed in mechanically operated mixers, except that when permitted by the Engineer, batches not exceeding 0.25-m^3 may be mixed by hand methods in conformance with the provisions in Section 90-6.05, "Hand-Mixing."

• Equipment having components made of aluminum or magnesium alloys that would have contact with plastic concrete during mixing, transporting, or pumping of portland cement concrete shall not be used.

• Concrete shall be homogeneous and thoroughly mixed, and there shall be no lumps or evidence of undispersed cementitious material.

• Uniformity of concrete mixtures will be determined by differences in penetration as determined by California Test 533, or slump as determined by ASTM Designation: C 143, and by variations in the proportion of coarse aggregate as determined by California Test 529.

• When the mix design specifies a penetration value, the difference in penetration, determined by comparing penetration tests on 2 samples of mixed concrete from the same batch or truck mixer load, shall not exceed 10 mm. When the mix design specifies a slump value, the difference in slump, determined by comparing slump tests on 2 samples of mixed concrete from the same batch or truck mixer load, shall not exceed the values given in the table below. Variation in the proportion of coarse aggregate will be determined by comparing the results of tests of 2 samples of mixed concrete from the same batch or truck mixer load and the difference between the 2 results shall not exceed 100 kg per cubic meter of concrete.

Average Slump	Maximum Permissible Difference
Less than 100-mm	25-mm
100-mm to 150-mm	38-mm
Greater than 150-mm to 225-mm	50-mm

• The Contractor shall furnish samples of the freshly mixed concrete and provide satisfactory facilities for obtaining the samples.

90-6.02 MACHINE MIXING

• Concrete mixers may be of the revolving drum or the revolving blade type, and the mixing drum or blades shall be operated uniformly at the mixing speed recommended by the manufacturer. Mixers and agitators that have an accumulation of hard concrete or mortar shall not be used.

• The temperature of mixed concrete, immediately before placing, shall be not less than 10°C or more than 32°C. Aggregates and water shall be heated or cooled as necessary to produce concrete within these temperature limits. Neither aggregates nor mixing water shall be heated to exceed 65°C. If ice is used to cool the concrete, discharge of the mixer will not be permitted until all ice is melted.

• The batch shall be so charged into the mixer that some water will enter in advance of cementitious materials and aggregates. All water shall be in the drum by the end of the first one-fourth of the specified mixing time.

• Cementitious materials shall be batched and charged into the mixer by means that will not result either in loss of cementitious materials due to the effect of wind, in accumulation of cementitious materials on surfaces of conveyors or hoppers, or in other conditions that reduce or vary the required quantity of cementitious material in the concrete mixture.

• Paving and stationary mixers shall be operated with an automatic timing device. The timing device and discharge mechanism shall be interlocked so that during normal operation no part of the batch will be discharged until the specified mixing time has elapsed.

• The total elapsed time between the intermingling of damp aggregates and all cementitious materials and the start of mixing shall not exceed 30 minutes.

• The size of batch shall not exceed the manufacturer's guaranteed capacity.

• When producing concrete for pavement or base, suitable batch counters shall be installed and maintained in good operating condition at job site batching plants and stationary mixers. The batch counters shall indicate the exact number of batches proportioned and mixed.

• Concrete shall be mixed and delivered to the job site by means of one of the following combinations of operations:

A. Mixed completely in a stationary mixer and the mixed concrete transported to the point of delivery in truck agitators or in nonagitating hauling equipment (central-mixed concrete).
B. Mixed partially in a stationary mixer, and the mixing completed in a truck mixer (shrink-mixed concrete).
C. Mixed completely in a truck mixer (transit-mixed concrete).
D. Mixed completely in a paving mixer.

• Agitators may be truck mixers operating at agitating speed or truck agitators. Each mixer and agitator shall have attached thereto in a prominent place a metal plate or plates on which is plainly marked the various uses for which the equipment is designed, the manufacturer's guaranteed capacity of the drum or container in terms of the volume of mixed concrete and the speed of rotation of the mixing drum or blades.

• Truck mixers shall be equipped with electrically or mechanically actuated revolution counters by which the number of revolutions of the drum or blades may readily be verified.

• When shrink-mixed concrete is furnished, concrete that has been partially mixed at a central plant shall be transferred to a truck mixer and all requirements for transit-mixed concrete shall apply. No credit in the number of revolutions at mixing speed will be allowed for partial mixing in a central plant.

90-6.03 TRANSPORTING MIXED CONCRETE

• Mixed concrete may be transported to the delivery point in truck agitators or truck mixers operating at the speed designated by the manufacturer of the equipment as agitating speed, or in nonagitating hauling equipment, provided the consistency and workability of the mixed concrete upon discharge at the delivery point is suitable for adequate placement and consolidation in place, and provided the mixed concrete after hauling to the delivery point conforms to the provisions in Section 90-6.01, "General."

• Truck agitators shall be loaded not to exceed the manufacturer's guaranteed capacity and shall maintain the mixed concrete in a thoroughly mixed and uniform mass during hauling.

• Bodies of nonagitating hauling equipment shall be constructed so that leakage of the concrete mix, or any part thereof, will not occur at any time.

• Concrete hauled in open-top vehicles shall be protected during hauling against rain or against exposure to the sun for more than 20 minutes when the ambient temperature exceeds 24°C.

• No additional mixing water shall be incorporated into the concrete during hauling or after arrival at the delivery point, unless authorized by the Engineer. If the Engineer authorizes additional water to be incorporated into the concrete, the drum shall be revolved not less than 30 revolutions at mixing speed after the water is added and before discharge is commenced.

• The rate of discharge of mixed concrete from truck mixer-agitators shall be controlled by the speed of rotation of the drum in the discharge direction with the discharge gate fully open.

• If a truck mixer or agitator is used for transporting concrete to the delivery point, discharge shall be completed within 1.5 hours or before 250 revolutions of the drum or blades, whichever occurs first, after the introduction of the cement to the aggregates. Under conditions contributing to quick stiffening of the concrete, or if the temperature of the concrete is 30°C or

above, the time allowed may be less than 1.5 hours. If an admixture is used to retard the set time, the temperature of the concrete shall not exceed 30°C, the time limit shall be 2 hours, and the revolution limitation shall be 300.

- If nonagitating hauling equipment is used for transporting concrete to the delivery point, discharge shall be completed within one hour after the addition of the cement to the aggregates. Under conditions contributing to quick stiffening of the concrete, or when the temperature of the concrete is 30°C or above, the time between the introduction of cement to the aggregates and discharge shall not exceed 45 minutes.
- Each load of concrete delivered at the job site shall be accompanied by a weighmaster certificate showing the mix identification number, nonrepeating load number, date and time at which the materials were batched, the total amount of water added to the load, and for transit-mixed concrete, the reading of the revolution counter at the time the truck mixer is charged with cement. This weighmaster certificate shall also show the actual scale masses (kilograms) for the ingredients batched. Theoretical or target batch masses shall not be used as a substitute for actual scale masses.
- Weighmaster certificates shall be provided in printed form, or if approved by the Engineer, the data may be submitted in electronic media. Electronic media shall be presented in a tab-delimited format on a 90 mm diskette with a capacity of at least 1.4 megabytes. Captured data, for the ingredients represented by each batch shall be "line feed, carriage return" (LFCR) and "one line, separate record" with allowances for sufficient fields to satisfy the amount of data required by these specifications.
- The Contractor may furnish a weighmaster certificate accompanied by a separate certificate that lists the actual batch masses or measurements for a load of concrete provided that both certificates are imprinted with the same nonrepeating load number that is unique to the contract and delivered to the job site with the load.
- Weighmaster certificates furnished by the Contractor shall conform to the provisions in Section 9-1.01, "Measurement of Quantities."

90-6.04 TIME OR AMOUNT OF MIXING

- Mixing of concrete in paving or stationary mixers shall continue for the required mixing time after all ingredients, except water and admixture, if added with the water, are in the mixing compartment of the mixer before any part of the batch is released. Transfer time in multiple drum mixers shall not be counted as part of the required mixing time.
- The required mixing time, in paving or stationary mixers, of concrete used for concrete structures, except minor structures, shall be not less than 90 seconds or more than 5 minutes, except that when directed by the Engineer in writing, the requirements of the following paragraph shall apply.
- The required mixing time, in paving or stationary mixers, except as provided in the preceding paragraph, shall be not less than 50 seconds or more than 5 minutes.
- The minimum required revolutions at the mixing speed for transit-mixed concrete shall not be less than that recommended by the mixer manufacturer, but in no case shall the number of revolutions be less than that required to consistently produce concrete conforming to the provisions for uniformity in Section 90-6.01, "General."
- When a high range water-reducing admixture is added to the concrete at the job site, the total number of revolutions shall not exceed 300.

90-6.05 HAND-MIXING

- Hand-mixed concrete shall be made in batches of not more than 0.25-m^3 and shall be mixed on a watertight, level platform. The proper amount of coarse aggregate shall be measured

in measuring boxes and spread on the platform and the fine aggregate shall be spread on this layer, the 2 layers being not more than 0.3-meters in total depth. On this mixture shall be spread the dry cementitious materials and the whole mass turned no fewer than 2 times dry; then sufficient clean water shall be added, evenly distributed, and the whole mass again turned no fewer than 3 times, not including placing in the carriers or forms.

90-6.06 AMOUNT OF WATER AND PENETRATION

• The amount of water used in concrete mixes shall be regulated so that the penetration of the concrete as determined by California Test 533 or the slump of the concrete as determined by ASTM Designation: C 143 is within the nominal values shown in the following table. When the penetration or slump of the concrete is found to exceed the nominal values listed, the mixture of subsequent batches shall be adjusted to reduce the penetration or slump to a value within the nominal range shown. Batches of concrete with a penetration or slump exceeding the maximum values listed shall not be used in the work. If Type F or Type G chemical admixtures are added to the mix, the penetration requirements shall not apply and the slump shall not exceed 225 mm after the chemical admixtures are added.

Type of Work	Nominal		Maximum	
	Penetration (mm)	Slump (mm)	Penetration (mm)	Slump (mm)
Concrete Pavement	0 - 25	—	40	—
Non-reinforced concrete facilities	0 - 35	—	50	—
Reinforced concrete structures				
Sections over 300-mm thick	0 - 35	—	65	—
Sections 300-mm thick or less	0 - 50	—	75	—
Concrete placed under water	—	150 - 200	—	225
Cast-in-place concrete piles	65 - 90	130 - 180	100	200

• The amount of free water used in concrete shall not exceed 183 kg/m^3, plus 20 kg for each required 100 kg of cementitious material in excess of 325 kg/m^3.

• The term free water is defined as the total water in the mixture minus the water absorbed by the aggregates in reaching a saturated surface-dry condition.

• If there are adverse or difficult conditions that affect the placing of concrete, the above specified penetration and free water content limitations may be exceeded providing the Contractor is granted permission by the Engineer in writing to increase the cementitious material content per cubic meter of concrete. The increase in water and cementitious material shall be at a ratio not to exceed 30 kg of water per added 100 kg of cementitious material per cubic meter. Full compensation for additional cementitious material and water added under these conditions shall be considered as included in the contract price paid for the concrete work involved and no additional compensation will be allowed therefor.

• The equipment for supplying water to the mixer shall be constructed and arranged so that the amount of water added can be measured accurately. Any method of discharging water into the mixer for a batch shall be accurate within 1.5 percent of the quantity of water required to be added to the mix for any position of the mixer. Tanks used to measure water shall be designed so that water cannot enter while water is being discharged into the mixer and discharge into the mixer shall be made rapidly in one operation without dribbling. All equipment shall be arranged so as to permit checking the amount of water delivered by discharging into measured containers.

90-7 CURING CONCRETE

90-7.01 METHODS OF CURING

• Newly placed concrete shall be cured by the methods specified in this Section 90-7.01 and the special provisions.

90-7.01A WATER METHOD

• The concrete shall be kept continuously wet by the application of water for a minimum curing period of 7 days after the concrete has been placed.

• Cotton mats, rugs, carpets, or earth or sand blankets may be used as a curing medium to retain the moisture during the curing period.

• If a curing medium consisting of cotton mats, rugs, carpets, polyethylene sheeting, polyethylene sheeting on burlap, or earth or sand blankets is to be used to retain the moisture, the entire surface of the concrete shall be kept damp by applying water with a nozzle that so atomizes the flow that a mist and not a spray is formed, until the surface of the concrete is covered with the curing medium. The moisture from the nozzle shall not be applied under pressure directly upon the concrete and shall not be allowed to accumulate on the concrete in a quantity sufficient to cause a flow or wash the surface. At the expiration of the curing period, the concrete surfaces shall be cleared of all curing media.

• At the option of the Contractor, a curing medium consisting of white opaque polyethylene sheeting extruded onto burlap may be used to cure concrete structures. The polyethylene sheeting shall have a minimum thickness of 100 µm, and shall be extruded onto 283.5-gram burlap.

• At the option of the Contractor, a curing medium consisting of polyethylene sheeting may be used to cure concrete columns. The polyethylene sheeting shall have a minimum thickness of 250 µm achieved in a single layer of material.

• If the Contractor chooses to use polyethylene sheeting or polyethylene sheeting on burlap as a curing medium, these media and any joints therein shall be secured as necessary to provide moisture retention and shall be within 75 mm of the concrete at all points along the surface being cured. When these media are used, the temperature of the concrete shall be monitored during curing. If the temperature of the concrete cannot be maintained below 60°C, use of these curing media shall be disallowed.

• When concrete bridge decks and flat slabs are to be cured without the use of a curing medium, the entire surface of the bridge deck or slab shall be kept damp by the application of water with an atomizing nozzle as specified above, until the concrete has set, after which the entire surface of the concrete shall be sprinkled continuously with water for a period of not less than 7 days.

90-7.01B CURING COMPOUND METHOD

• Surfaces of the concrete that are exposed to the air shall be sprayed uniformly with a curing compound.

• Curing compounds to be used shall be as follows:

1. Pigmented curing compound conforming to the requirements in ASTM Designation: C 309, Type 2, Class B, except the resin type shall be poly-alpha-methylstyrene.
2. Pigmented curing compound conforming to the requirements in ASTM Designation: C 309, Type 2, Class B.
3. Pigmented curing compound conforming to the requirements in ASTM Designation: C 309, Type 2, Class A.

4. Nonpigmented curing compound conforming to the requirements in ASTM Designation: C 309, Type 1, Class B.
5. Nonpigmented curing compound conforming to the requirements in ASTM Designation: C 309, Type 1, Class A.
6. Nonpigmented curing compound with fugitive dye conforming to the requirements in ASTM Designation: C 309, Type 1-D, Class A.

- The infrared scan for the dried vehicle from curing compound (1) shall match the infrared scan on file at the Transportation Laboratory.
- The loss of water for each type of curing compound, when tested in conformance with the requirements in California Test 534, shall not be more than 0.15-kg/m^2 in 24 hours.
- The curing compound to be used will be specified elsewhere in these specifications or in the special provisions.
- If the use of curing compound is required or permitted elsewhere in these specifications or in the special provisions and no specific kind is specified, any of the curing compounds listed above may be used.
- Curing compound shall be applied at a nominal rate of 3.7 m^2/L, unless otherwise specified.
- At any point, the application rate shall be within ±1.2 m^2/L of the nominal rate specified, and the average application rate shall be within ±0.5 m^2/L of the nominal rate specified when tested in conformance with the requirements in California Test 535. Runs, sags, thin areas, skips, or holidays in the applied curing compound shall be evidence that the application is not satisfactory.
- Curing compounds shall be applied using power operated spray equipment. The power operated spraying equipment shall be equipped with an operational pressure gage and a means of controlling the pressure. Hand spraying of small and irregular areas that are not reasonably accessible to mechanical spraying equipment, in the opinion of the Engineer, may be permitted.
- The curing compound shall be applied to the concrete following the surface finishing operation, immediately before the moisture sheen disappears from the surface, but before any drying shrinkage or craze cracks begin to appear. In the event of any drying or cracking of the surface, application of water with an atomizing nozzle as specified in Section 90-7.01A, "Water Method," shall be started immediately and shall be continued until application of the compound is resumed or started; however, the compound shall not be applied over any resulting freestanding water. Should the film of compound be damaged from any cause before the expiration of 7 days after the concrete is placed in the case of structures and 72 hours in the case of pavement, the damaged portion shall be repaired immediately with additional compound.
- At the time of use, compounds containing pigments shall be in a thoroughly mixed condition with the pigment uniformly dispersed throughout the vehicle. A paddle shall be used to loosen all settled pigment from the bottom of the container, and a power driven agitator shall be used to disperse the pigment uniformly throughout the vehicle.
- Agitation shall not introduce air or other foreign substance into the curing compound.
- The manufacturer shall include in the curing compound the necessary additives for control of sagging, pigment settling, leveling, de-emulsification, or other requisite qualities of a satisfactory working material. Pigmented curing compounds shall be manufactured so that the pigment does not settle badly, does not cake or thicken in the container, and does not become granular or curdled. Settlement of pigment shall be a thoroughly wetted, soft, mushy mass permitting the complete and easy vertical penetration of a paddle. Settled pigment shall be easily redispersed, with minimum resistance to the sideways manual motion of the paddle across the bottom of the container, to form a smooth uniform product of the proper consistency.

- Curing compounds shall remain sprayable at temperatures above 4°C and shall not be diluted or altered after manufacture.
- The curing compound shall be packaged in clean 1040-L totes, 210-L barrels, or 19-L pails, or shall be supplied from a suitable storage tank located at the job site. The containers shall comply with "Title 49, Code of Federal Regulations, Hazardous Materials Regulations." The 1040-L totes and the 210-L barrels shall have removable lids and airtight fasteners. The 19-L pails shall be round and have standard full open head and bail. Lids with bungholes will not be permitted. Settling or separation of solids in containers, except tanks, must be completely redispersed with low speed mixing prior to use, in conformance with these specifications and the manufacturer's recommendations. Mixing shall be accomplished either manually by use of a paddle or by use of a mixing blade driven by a drill motor, at low speed. Mixing blades shall be the type used for mixing paint. On-site storage tanks shall be kept clean and free of contaminants. Each tank shall have a permanent system designed to completely redisperse settled material without introducing air or other foreign substances.
- Steel containers and lids shall be lined with a coating that will prevent destructive action by the compound or chemical agents in the air space above the compound. The coating shall not come off the container or lid as skins. Containers shall be filled in a manner that will prevent skinning. Plastic containers shall not react with the compound.
- Each container shall be labeled with the manufacturer's name, kind of curing compound, batch number, volume, date of manufacture, and volatile organic compound (VOC) content. The label shall also warn that the curing compound containing pigment shall be well stirred before use. Precautions concerning the handling and the application of curing compound shall be shown on the label of the curing compound containers in conformance with the Construction Safety Orders and General Industry Safety Orders of the State.
- Containers of curing compound shall be labeled to indicate that the contents fully comply with the rules and regulations concerning air pollution control in the State.
- When the curing compound is shipped in tanks or tank trucks, a shipping invoice shall accompany each load. The invoice shall contain the same information as that required herein for container labels.
- Curing compound will be sampled by the Engineer at the source of supply, at the job site, or at both locations.
- Curing compound shall be formulated so as to maintain the specified properties for a minimum of one year. The Engineer may require additional testing before use to determine compliance with these specifications if the compound has not been used within one year or whenever the Engineer has reason to believe the compound is no longer satisfactory.
- Tests will be conducted in conformance with the latest ASTM test methods and methods in use by the Transportation Laboratory.

90-7.01C WATERPROOF MEMBRANE METHOD

- The exposed finished surfaces of concrete shall be sprayed with water, using a nozzle that so atomizes the flow that a mist and not a spray is formed, until the concrete has set, after which the curing membrane, shall be placed. The curing membrane shall remain in place for a period of not less than 72 hours.
- Sheeting material for curing concrete shall conform to the requirements in AASHTO Designation: M 171 for white reflective materials.
- The sheeting material shall be fabricated into sheets of such width as to provide a complete cover for the entire concrete surface. Joints in the sheets shall be securely cemented together in such a manner as to provide a waterproof joint. The joint seams shall have a minimum lap of 100 mm.

- The sheets shall be securely weighted down by placing a bank of earth on the edges of the sheets or by other means satisfactory to the Engineer.
- Should any portion of the sheets be broken or damaged before the expiration of 72 hours after being placed, the broken or damaged portions shall be immediately repaired with new sheets properly cemented into place.
- Sections of membrane that have lost their waterproof qualities or have been damaged to such an extent as to render them unfit for curing the concrete shall not be used.

90-7.01D FORMS-IN-PLACE METHOD

- Formed surfaces of concrete may be cured by retaining the forms in place. The forms shall remain in place for a minimum period of 7 days after the concrete has been placed, except that for members over 0.5-m in least dimension the forms shall remain in place for a minimum period of 5 days.
- Joints in the forms and the joints between the end of forms and concrete shall be kept moisture tight during the curing period. Cracks in the forms and cracks between the forms and the concrete shall be resealed by methods subject to the approval of the Engineer.

90-7.02 CURING PAVEMENT

- The entire exposed area of the pavement, including edges, shall be cured by the waterproof membrane method, or curing compound method using curing compound (1) or (2) as the Contractor may elect. Should the side forms be removed before the expiration of 72 hours following the start of curing, the exposed pavement edges shall also be cured. If the pavement is cured by means of the curing compound method, the sawcut and all portions of the curing compound that have been disturbed by sawing operations shall be restored by spraying with additional curing compound.
- Curing shall commence as soon as the finishing process provided in Section 40-1.10, "Final Finishing," has been completed. The method selected shall conform to the provisions in Section 90-7.01, "Methods of Curing."
- When the curing compound method is used, the compound shall be applied to the entire pavement surface by mechanical sprayers. Spraying equipment shall be of the fully atomizing type equipped with a tank agitator that provides for continual agitation of the curing compound during the time of application. The spray shall be adequately protected against wind, and the nozzles shall be so oriented or moved mechanically transversely as to result in the minimum specified rate of coverage being applied uniformly on exposed faces. Hand spraying of small and irregular areas, and areas inaccessible to mechanical spraying equipment, in the opinion of the Engineer, will be permitted. When the ambient air temperature is above 15°C, the Contractor shall fog the surface of the concrete with a fine spray of water as specified in Section 90-7.01A, "Water Method." The surface of the pavement shall be kept moist between the hours of 10:00 a.m. and 4:30 p.m. on the day the concrete is placed. However, the fogging done after the curing compound has been applied shall not begin until the compound has set sufficiently to prevent displacement. Fogging shall be discontinued if ordered in writing by the Engineer.

90-7.03 CURING STRUCTURES

- Newly placed concrete for cast-in-place structures, other than highway bridge decks, shall be cured by the water method, the forms-in-place method, or, as permitted herein, by the curing compound method, in conformance with the provisions in Section 90-7.01, "Methods of Curing."

• The curing compound method using a pigmented curing compound may be used on concrete surfaces of construction joints, surfaces that are to be buried underground, and surfaces where only ordinary surface finish is to be applied and on which a uniform color is not required and that will not be visible from a public traveled way. If the Contractor elects to use the curing compound method on the bottom slab of box girder spans, the curing compound shall be curing compound (1).

• The top surface of highway bridge decks shall be cured by both the curing compound method and the water method. The curing compound shall be curing compound (1).

• Concrete surfaces of minor structures, as defined in Section 51-1.02, "Minor Structures," shall be cured by the water method, the forms-in-place method or the curing compound method.

• When deemed necessary by the Engineer during periods of hot weather, water shall be applied to concrete surfaces being cured by the curing compound method or by the forms-in-place method, until the Engineer determines that a cooling effect is no longer required. Application of water for this purpose will be paid for as extra work as provided in Section 4-1.03D, "Extra Work."

90-7.04 CURING PRECAST CONCRETE MEMBERS

• Precast concrete members shall be cured in conformance with any of the methods specified in Section 90-7.01, "Methods of Curing." Curing shall be provided for the minimum time specified for each method or until the concrete reaches its design strength, whichever is less. Steam curing may also be used for precast members and shall conform to the following provisions:

A. After placement of the concrete, members shall be held for a minimum 4-hour presteaming period. If the ambient air temperature is below 10°C, steam shall be applied during the presteaming period to hold the air surrounding the member at a temperature between 10°C and 32°C.

B. To prevent moisture loss on exposed surfaces during the presteaming period, members shall be covered as soon as possible after casting or the exposed surfaces shall be kept wet by fog spray or wet blankets.

C. Enclosures for steam curing shall allow free circulation of steam about the member and shall be constructed to contain the live steam with a minimum moisture loss. The use of tarpaulins or similar flexible covers will be permitted, provided they are kept in good repair and secured in such a manner as to prevent the loss of steam and moisture.

D. Steam at the jets shall be at low pressure and in a saturated condition. Steam jets shall not impinge directly on the concrete, test cylinders, or forms. During application of the steam, the temperature rise within the enclosure shall not exceed 22°C per hour. The curing temperature throughout the enclosure shall not exceed 65°C and shall be maintained at a constant level for a sufficient time necessary to develop the required transfer strength. Control cylinders shall be covered to prevent moisture loss and shall be placed in a location where temperature is representative of the average temperature of the enclosure.

E. Temperature recording devices that will provide an accurate, continuous, permanent record of the curing temperature shall be provided. A minimum of one temperature recording device per 60 m of continuous bed length will be required for checking temperature.

F. Members in pretension beds shall be detensioned immediately after the termination of steam curing while the concrete and forms are still warm, or the temperature under the enclosure shall be maintained above 15°C until the stress is transferred to the concrete.

G. Curing of precast concrete will be considered completed after termination of the steam curing cycle.

90-7.05 CURING PRECAST PRESTRESSED CONCRETE PILES

• Newly placed concrete for precast prestressed concrete piles shall be cured in conformance with the provisions in Section 90-7.04, "Curing Precast Concrete Members," except that piles in a corrosive environment shall be cured as follows:

A. Piles shall be either steam cured or water cured. If water curing is used, the piles shall be kept continuously wet by the application of water in conformance with the provisions in Section 90-7.01A, "Water Method."

B. If steam curing is used, the steam curing provisions in Section 90-7.04, "Curing Precast Concrete Members," shall apply except that the piles shall be kept continuously wet for their entire length for a period of not less than 3 days, including the holding and steam curing periods.

90-7.06 CURING SLOPE PROTECTION

• Concrete slope protection shall be cured in conformance with any of the methods specified in Section 90-7.01, "Methods of Curing."

• Concreted-rock slope protection shall be cured in conformance with any of the methods specified in Section 90-7.01, "Methods of Curing," with a blanket of earth kept wet for 72 hours, or by sprinkling with a fine spray of water every 2 hours during the daytime for a period of 3 days.

90-7.07 CURING MISCELLANEOUS CONCRETE WORK

• Exposed surfaces of curbs shall be cured by pigmented curing compounds as specified in Section 90-7.01B, "Curing Compound Method."

• Concrete sidewalks, gutter depressions, island paving, curb ramps, driveways, and other miscellaneous concrete areas shall be cured in conformance with any of the methods specified in Section 90-7.01, "Methods of Curing."

• Shotcrete shall be cured for at least 72 hours by spraying with water, by a moist earth blanket, or by any of the methods provided in Section 90-7.01, "Methods of Curing."

• Mortar and grout shall be cured by keeping the surface damp for 3 days.

• After placing, the exposed surfaces of sign structure foundations, including pedestal portions, if constructed, shall be cured for at least 72 hours by spraying with water, by a moist earth blanket, or by any of the methods provided in Section 90-7.01, "Methods of Curing."

90-8 PROTECTING CONCRETE

90-8.01 GENERAL

• In addition to the provisions in Section 7-1.16, "Contractor's Responsibility for the Work and Materials," the Contractor shall protect concrete as provided in this Section 90-8. If required by the Engineer, the Contractor shall submit a written outline of the proposed methods for protecting the concrete.

• The Contractor shall protect concrete from damage from any cause, which shall include, but not be limited to: rain, heat, cold, wind, Contractor's actions, and actions of others.

• Concrete shall not be placed on frozen or ice-coated ground or subgrade nor on ice-coated forms, reinforcing steel, structural steel, conduits, precast members, or construction joints.

• Under rainy conditions, placing of concrete shall be stopped before the quantity of surface water is sufficient to damage surface mortar or cause a flow or wash of the concrete surface, unless the Contractor provides adequate protection against damage.

• Concrete that has been frozen or damaged by other causes, as determined by the Engineer, shall be removed and replaced by the Contractor at the Contractor's expense.

90-8.02 PROTECTING CONCRETE STRUCTURES

• Structure concrete and shotcrete used as structure concrete shall be maintained at a temperature of not less than 7°C for 72 hours after placing and at not less than 4°C for an additional 4 days.

90-8.03 PROTECTING CONCRETE PAVEMENT

• Pavement concrete shall be maintained at a temperature of not less than 4°C for 72 hours.

• Except as provided in Section 7-1.08, "Public Convenience," the Contractor shall protect concrete pavement against construction and other activities that abrade, scar, discolor, reduce texture depth, lower coefficient of friction, or otherwise damage the surface. Stockpiling, drifting, or excessive spillage of soil, gravel, petroleum products, and concrete or asphalt mixes on the surface of concrete pavement is prohibited unless otherwise specified in these specifications, the special provisions or permitted by the Engineer.

• If ordered by the Engineer or shown on the plans or specified in the special provisions, pavement crossings shall be constructed for the convenience of public traffic. The material and work necessary for the construction of the crossings, and their subsequent removal and disposal, will be paid for at the contract unit prices for the items of work involved and if there are no contract items for the work involved, payment for pavement crossings will be made by extra work as provided in Section 4-1.03D, "Extra Work.". Where public traffic will be required to cross over the new pavement, Type III portland cement may be used in concrete, if permitted in writing by the Engineer. The pavement may be opened to traffic as soon as the concrete has developed a modulus of rupture of 3.8 MPa. The modulus of rupture will be determined by California Test 523.

• No traffic or Contractor's equipment, except as hereinafter provided, will be permitted on the pavement before a period of 10 days has elapsed after the concrete has been placed, nor before the concrete has developed a modulus of rupture of at least 3.8 MPa. Concrete that fails to attain a modulus of rupture of 3.8 MPa within 10 days shall not be opened to traffic until directed by the Engineer.

• Equipment for sawing weakened plane joints will be permitted on the pavement as specified in Section 40-1.08B, "Weakened Plane Joints."

• When requested in writing by the Contractor, the tracks on one side of paving equipment will be permitted on the pavement after a modulus of rupture of 2.4 MPa has been attained, provided that:

A. Unit pressure exerted on the pavement by the paver shall not exceed 135 kPa;
B. Tracks with cleats, grousers, or similar protuberances shall be modified or shall travel on planks or equivalent protective material, so that the pavement is not damaged; and
C. No part of the track shall be closer than 0.3-m from the edge of pavement.

• In case of visible cracking of, or other damage to the pavement, operation of the paving equipment on the pavement shall be immediately discontinued.

• Damage to the pavement resulting from early use of pavement by the Contractor's equipment as provided above shall be repaired by the Contractor.

• The State will furnish the molds and machines for testing the concrete for modulus of rupture, and the Contractor, at the Contractor's expense, shall furnish the material and whatever labor the Engineer may require.

90-9 COMPRESSIVE STRENGTH

90-9.01 GENERAL

• Concrete compressive strength requirements consist of a minimum strength that shall be attained before various loads or stresses are applied to the concrete and, for concrete designated by strength, a minimum strength at the age of 28 days or at the age otherwise allowed in Section 90-1.01, "Description." The various strengths required are specified in these specifications or the special provisions or are shown on the plans.

• The compressive strength of concrete will be determined from test cylinders that have been fabricated from concrete sampled in conformance with the requirements of California Test 539. Test cylinders will be molded and initially field cured in conformance with California Test 540. Test cylinders will be cured and tested after receipt at the testing laboratory in conformance with the requirements of California Test 521. A strength test shall consist of the average strength of 2 cylinders fabricated from material taken from a single load of concrete, except that, if any cylinder should show evidence of improper sampling, molding, or testing, that cylinder shall be discarded and the strength test shall consist of the strength of the remaining cylinder.

• When concrete compressive strength is specified as a prerequisite to applying loads or stresses to a concrete structure or member, test cylinders for other than steam cured concrete will be cured in conformance with Method 1 of California Test 540. The compressive strength of concrete determined for these purposes will be evaluated on the basis of individual tests.

• When concrete is designated by 28-day compressive strength rather than by cementitious material content, the concrete strength to be used as a basis for acceptance of other than steam cured concrete will be determined from cylinders cured in conformance with Method 1 of California Test 540. If the result of a single compressive strength test at the maximum age specified or allowed is below the specified strength but is 95 percent or more of the specified strength, the Contractor shall make corrective changes, subject to approval of the Engineer, in the mix proportions or in the concrete fabrication procedures, before placing additional concrete, and shall pay to the State $14 for each in-place cubic meter of concrete represented by the deficient test. If the result of a single compressive strength test at the maximum age specified or allowed is below 95 percent of the specified strength, but is 85 percent or more of the specified strength, the Contractor shall make the corrective changes specified above, and shall pay to the State $20 for each in place cubic meter of concrete represented by the deficient test. In addition, such corrective changes shall be made when the compressive strength of concrete tested at 7 days indicates, in the judgment of the Engineer, that the concrete will not attain the required compressive strength at the maximum age specified or allowed. Concrete represented by a single test that indicates a compressive strength of less than 85 percent of the specified 28-day compressive strength will be rejected in conformance with the provisions in Section 6-1.04, "Defective Materials."

• If the test result indicates that the compressive strength at the maximum curing age specified or allowed is below the specified strength, but is 85 percent or more of the specified strength, payments to the State as required above shall be made, unless the Contractor, at the Contractor's expense, obtains and submits evidence acceptable to the Engineer that the strength of the concrete placed in the work meets or exceeds the specified 28-day compressive strength. If the test result indicates a compressive strength at the maximum curing age specified or allowed below 85 percent, the concrete represented by that test will be rejected, unless the

Contractor, at the Contractor's expense, obtains and submits evidence acceptable to the Engineer that the strength and quality of the concrete placed in the work are acceptable. If the evidence consists of tests made on cores taken from the work, the cores shall be obtained and tested in conformance with the requirements in ASTM Designation: C 42.

- No single compressive strength test shall represent more than 250 m^3.
- If a precast concrete member is steam cured, the compressive strength of the concrete will be determined from test cylinders that have been handled and stored in conformance with Method 3 of California Test 540. The compressive strength of steam cured concrete will be evaluated on the basis of individual tests representing specific portions of production. If the concrete is designated by 28-day compressive strength rather than by cementitious material content, the concrete shall be considered to be acceptable whenever its compressive strength reaches the specified 28-day compressive strength provided that strength is reached in not more than the maximum number of days specified or allowed after the member is cast.
- When concrete is specified by compressive strength, prequalification of materials, mix proportions, mixing equipment, and procedures proposed for use will be required prior to placement of the concrete. Prequalification shall be accomplished by the submission of acceptable certified test data or trial batch reports by the Contractor. Prequalification data shall be based on the use of materials, mix proportions, mixing equipment, procedures, and size of batch proposed for use in the work.
- Certified test data, in order to be acceptable, shall indicate that not less than 90 percent of at least 20 consecutive tests exceed the specified strength at the maximum number of cure days specified or allowed, and none of those tests are less than 95 percent of specified strength. Strength tests included in the data shall be the most recent tests made on concrete of the proposed mix design and all shall have been made within one year of the proposed use of the concrete.
- Trial batch test reports, in order to be acceptable, shall indicate that the average compressive strength of 5 consecutive concrete cylinders, taken from a single batch, at not more than 28 days (or the maximum age allowed) after molding shall be at least 4 MPa greater than the specified 28-day compressive strength, and no individual cylinder shall have a strength less than the specified strength at the maximum age specified or allowed. Data contained in the report shall be from trial batches that were produced within one year of the proposed use of specified strength concrete in the project. Whenever air-entrainment is required, the air content of trial batches shall be equal to or greater than the air content specified for the concrete without reduction due to tolerances.
- Tests shall be performed in conformance with either the appropriate California Test methods or the comparable ASTM test methods. Equipment employed in testing shall be in good condition and shall be properly calibrated. If the tests are performed during the life of the contract, the Engineer shall be notified sufficiently in advance of performing the tests in order to witness the test procedures.
- The certified test data and trial batch test reports shall include the following information:

A. Date of mixing.
B. Mixing equipment and procedures used.
C. The size of batch in cubic meters and the mass, type, and source of all ingredients used.
D. Penetration or slump (if the concrete will be placed under water or placed in cast-in-place concrete piles) of the concrete.
E. The air content of the concrete if an air-entraining admixture is used.
F. The age at time of testing and strength of all concrete cylinders tested.

- Certified test data and trial batch test reports shall be signed by an official of the firm that performed the tests.
- When approved by the Engineer, concrete from trial batches may be used in the work at locations where concrete of a lower quality is required and the concrete will be paid for as the type or class of concrete required at that location.
- After materials, mix proportions, mixing equipment, and procedures for concrete have been prequalified for use, additional prequalification by testing of trial batches will be required prior to making changes that, in the judgment of the Engineer, could result in a strength of concrete below that specified.
- The Contractor's attention is directed to the time required to test trial batches and the Contractor shall be responsible for production of trial batches at a sufficiently early date so that the progress of the work is not delayed.
- When precast concrete members are manufactured at the plant of an established manufacturer of precast concrete members, the mix proportions of the concrete shall be determined by the Contractor, and a trial batch and prequalification of the materials, mix proportions, mixing equipment, and procedures will not be required.

90-10 MINOR CONCRETE

90-10.01 GENERAL

- Concrete for minor structures, slope paving, curbs, sidewalks and other concrete work, when designated as minor concrete on the plans, in the specifications, or in the contract item, shall conform to the provisions specified herein.
- The Engineer, at the Engineer's discretion, will inspect and test the facilities, materials and methods for producing the concrete to ensure that minor concrete of the quality suitable for use in the work is obtained.

90-10.02 MATERIALS

- Minor concrete shall conform to the following requirements:

90-10.02A CEMENTITIOUS MATERIAL

- Cementitious material shall conform to the provisions in Section 90-1.01, "Description."

90-10.02B AGGREGATE

- Aggregate shall be clean and free from deleterious coatings, clay balls, roots, and other extraneous materials.
- Use of crushed concrete or reclaimed aggregate is acceptable only if the aggregate satisfies all aggregate requirements.
- The Contractor shall submit to the Engineer for approval, a grading of the combined aggregate proposed for use in the minor concrete. After acceptance of the grading, aggregate furnished for minor concrete shall conform to that grading, unless a change is authorized in writing by the Engineer.
- The Engineer may require the Contractor to furnish periodic test reports of the aggregate grading furnished. The maximum size of aggregate used shall be at the option of the Contractor, but in no case shall the maximum size be larger than 37.5 mm or smaller than 19 mm.
- The Engineer may waive, in writing, the gradation requirements in this Section 90-10.02B, if, in the Engineer's opinion, the furnishing of the gradation is not necessary for the type or amount of concrete work to be constructed.

90-10.02C WATER

• Water used for washing, mixing, and curing shall be free from oil, salts, and other impurities that would discolor or etch the surface or have an adverse affect on the quality of the concrete.

90-10.02D ADMIXTURES

• The use of admixtures shall conform to the provisions in Section 90-4, "Admixtures."

90-10.03 PRODUCTION

• Cementitious material, water, aggregate, and admixtures shall be stored, proportioned, mixed, transported, and discharged in conformance with recognized standards of good practice that will result in concrete that is thoroughly and uniformly mixed, that is suitable for the use intended, and that conforms to requirements specified herein. Recognized standards of good practice are outlined in various industry publications such as are issued by American Concrete Institute, AASHTO, or the Department.

• The cementitious material content of minor concrete shall conform to the provisions in Section 90-1.01, "Description."

• The amount of water used shall result in a consistency of concrete conforming to the provisions in Section 90-6.06, "Amount of Water and Penetration." Additional mixing water shall not be incorporated into the concrete during hauling or after arrival at the delivery point, unless authorized by the Engineer.

• Discharge of ready-mixed concrete from the transporting vehicle shall be made while the concrete is still plastic and before stiffening occurs. An elapsed time of 1.5 hours (one hour in nonagitating hauling equipment), or more than 250 revolutions of the drum or blades, after the introduction of the cementitious material to the aggregates, or a temperature of concrete of more than 32°C will be considered conditions contributing to the quick stiffening of concrete. The Contractor shall take whatever action is necessary to eliminate quick stiffening, except that the addition of water will not be permitted.

• The required mixing time in stationary mixers shall be not less than 50 seconds or more than 5 minutes.

• The minimum required revolutions at mixing speed for transit-mixed concrete shall be not less than that recommended by the mixer manufacturer, and shall be increased, if necessary, to produce thoroughly and uniformly mixed concrete.

• When a high range water-reducing admixture is added to the concrete at the job site, the total number of revolutions shall not exceed 300.

• Each load of ready-mixed concrete shall be accompanied by a weighmaster certificate that shall be delivered to the Engineer at the discharge location of the concrete, unless otherwise directed by the Engineer. The weighmaster certificate shall be clearly marked with the date and time of day when the load left the batching plant and, if hauled in truck mixers or agitators, the time the mixing cycle started.

• A Certificate of Compliance conforming to the provisions in Section 6–1.07, "Certificates of Compliance," shall be furnished to the Engineer, prior to placing minor concrete from a source not previously used on the contract, stating that minor concrete to be furnished meets contract requirements, including minimum cementitious material content specified.

90-10.04 CURING MINOR CONCRETE

• Curing minor concrete shall conform to the provisions in Section 90-7, "Curing Concrete."

90-10.05 PROTECTING MINOR CONCRETE

• Protecting minor concrete shall conform to the provisions in Section 90-8, "Protecting Concrete," except the concrete shall be maintained at a temperature of not less than 4°C for 72 hours after placing.

90-10.06 MEASUREMENT AND PAYMENT

• Minor concrete will be measured and paid for in conformance with the provisions specified in the various sections of these specifications covering concrete construction when minor concrete is specified in the specifications, shown on the plans, or indicated by contract item in the Engineer's Estimate.

90-11 MEASUREMENT AND PAYMENT

90-11.01 MEASUREMENT

• Portland cement concrete will be measured in conformance with the provisions specified in the various sections of these specifications covering construction requiring concrete.

• For concrete measured at the mixer, the volume in cubic meters shall be computed as the total mass of the batch in kilograms divided by the density of the concrete in kilograms per cubic meter. The total mass of the batch shall be calculated as the sum of all materials, including water, entering the batch. The density of the concrete will be determined in conformance with the requirements in California Test 518.

90-11.02 PAYMENT

• Portland cement concrete will be paid for in conformance with the provisions specified in the various sections of these specifications covering construction requiring concrete.

• Full compensation for furnishing and incorporating admixtures required by these specifications or the special provisions will be considered as included in the contract prices paid for the concrete involved and no additional compensation will be allowed therefor.

• Should the Engineer order the Contractor to incorporate any admixtures in the concrete when their use is not required by these specifications or the special provisions, furnishing the admixtures and adding them to the concrete will be paid for as extra work as provided in Section 4-1.03D, "Extra Work."

• Should the Contractor use admixtures in conformance with the provisions in Section 90-4.05, "Optional Use of Chemical Admixtures," or Section 90-4.07, "Optional Use of Air-entraining Admixtures," or should the Contractor request and obtain permission to use other admixtures for the Contractor's benefit, the Contractor shall furnish those admixtures and incorporate them into the concrete at the Contractor's expense and no additional compensation will be allowed therefor.

SECTION 91: PAINT

Issue Date: November 18, 2005

Section 91-3, "Paints for Timber," of the Standard Specifications is amended to read:

91-3 PAINTS FOR TIMBER

91-3.01 WOOD PRIMER, LATEX-BASE

Classification:

• This specification covers a ready-mixed priming paint for use on unpainted wood or exterior woodwork. It shall conform with the requirements in the Detailed Performance Standards of the Master Painters Institute (MPI) for exterior wood primers, and be listed on the Exterior Latex Wood Primer MPI List Number 6.

91-3.02 PAINT; LATEX-BASE FOR EXTERIOR WOOD, WHITE AND TINTS

Classification:

• This specification covers a ready-mixed paint for use on wood surfaces subject to outside exposures. This paint shall conform to the requirements in the Detailed Performance Standards of the Master Painters Institute (MPI) for Paint, Latex, Exterior, and shall be listed on the following MPI Approved Products List:

A. Exterior Latex, Flat MPI Gloss Level 1, MPI List Number 10.
B. Exterior Latex, Semi-Gloss, MPI Gloss Level 5, MPI List Number 11.
C. Exterior Latex, Gloss, MPI Gloss Level 6, MPI List Number 119.

• Unpainted wood shall first be primed with wood primer conforming to the provisions in Section 91-3.01, "Wood Primer, Latex-Base."

Section 91-4, "Miscellaneous Paints," of the Standard Specifications is amended to read:

91-4 MISCELLANEOUS PAINTS

91-4.01 THROUGH 91-4.04 (BLANK)

91-4.05 PAINT; ACRYLIC EMULSION, EXTERIOR WHITE AND LIGHT AND MEDIUM TINTS

Classification:

• This specification covers an acrylic emulsion paint designed for use on exterior masonry. This paint shall conform to the requirements in the Detailed Performance Standards of the Master Painters Institute (MPI) for Paint, Latex, Exterior, and shall be listed on the following MPI Approved Products Lists:

A. Exterior Latex, Flat MPI Gloss Level 1, MPI List Number 10.
B. Exterior Latex, Semi-Gloss, MPI Gloss Level 5, MPI List Number 11.
C. Exterior Latex, Gloss, MPI Gloss Level 6, MPI List Number 119.

• This paint may be tinted by using "universal" or "all purpose" concentrates.

SECTION 92: ASPHALTS

Issue Date: February 2, 2007

Section 92, "Asphalts," of the Standard Specifications is amended to read:

92-1.01 DESCRIPTION

• Asphalt is refined petroleum or a mixture of refined liquid asphalt and refined solid asphalt that are prepared from crude petroleum. Asphalt is:

1. Free from residues caused by the artificial distillation of coal, coal tar, or paraffin
2. Free from water
3. Homogeneous

92-1.02 MATERIALS

GENERAL

• Furnish asphalt under the Department's "Certification Program for Suppliers of Asphalt." The Department maintains the program requirements, procedures, and a list of approved suppliers at:

http://www.dot.ca.gov/hq/esc/Translab/fpmcoc.htm

• Transport, store, use, and dispose of asphalt safely.

• Prevent the formation of carbonized particles caused by overheating asphalt during manufacturing or construction.

GRADES

• Performance graded (PG) asphalt binder is:

Performance Graded Asphalt Binder

Property	AASHTO Test Method	Specification Grade PG 58-22 [a]	PG 64-10	PG 64-16	PG 64-28	PG 70-10
Original Binder						
Flash Point, Minimum °C	T 48	230	230	230	230	230
Solubility, Minimum % [b]	T 44	99	99	99	99	99
Viscosity at 135°C, [c] Maximum, Pa·s	T 316	3.0	3.0	3.0	3.0	3.0
Dynamic Shear, Test Temp. at 10 rad/s, °C Minimum G*/sin(delta), kPa	T 315	58 1.00	64 1.00	64 1.00	64 1.00	70 1.00
RTFO Test, [e] Mass Loss, Maximum, %	T 240	1.00	1.00	1.00	1.00	1.00
RTFO Test Aged Binder						
Dynamic Shear, Test Temp. at 10 rad/s, °C Minimum G*/sin(delta), kPa	T 315	58 2.20	64 2.20	64 2.20	64 2.20	70 2.20
Ductility at 25°C Minimum, cm	T 51	75	75	75	75	75
PAV [f] Aging, Temperature, °C	R 28	100	100	100	100	110
RTFO Test and PAV Aged Binder						
Dynamic Shear, Test Temp. at 10 rad/s, °C Maximum G*sin(delta), kPa	T 315	22 [d] 5000	31 [d] 5000	28 [d] 5000	22 [d] 5000	34 [d] 5000
Creep Stiffness, Test Temperature, °C Maximum S-value, Mpa Minimum M-value	T 313	-12 300 0.300	0 300 0.300	-6 300 0.300	-18 300 0.300	0 300 0.300

Notes:

a. Use as asphalt rubber base stock for high mountain and high desert area.

b. The Engineer waives this specification if the supplier is a Quality Supplier as defined by the Department's "Certification Program for Suppliers of Asphalt."

c. The Engineer waives this specification if the supplier certifies the asphalt binder can be adequately pumped and mixed at temperatures meeting applicable safety standards.

d. Test the sample at 3°C higher if it fails at the specified test temperature. G*sin(delta) remains 5000 kPa maximum.

e. "RTFO Test" means the asphaltic residue obtained using the Rolling Thin Film Oven Test, AASHTO Test Method T 240 or ASTM Designation: D 2872. The residue from mass change determination may be used for other tests.

f. "PAV" means Pressurized Aging Vessel.

- Performance graded polymer modified asphalt binder (PG Polymer Modified) is:

Performance Graded Polymer Modified Asphalt Binder [a]

Property	AASHTO Test Method	Specification Grade		
		PG 58-34 PM	PG 64-28 PM	PG 76-22 PM
Original Binder				
Flash Point, Minimum °C	T 48	230	230	230
Solubility, Minimum % [b]	T 44[c]	98.5	98.5	98.5
Viscosity at 135°C, [d] Maximum, Pa·s	T 316	3.0	3.0	3.0
Dynamic Shear, Test Temp. at 10 rad/s, °C Minimum G*/sin(delta), kPa	T 315	58 1.00	64 1.00	76 1.00
RTFO Test , Mass Loss, Maximum, %	T 240	1.00	1.00	1.00
RTFO Test Aged Binder				
Dynamic Shear, Test Temp. at 10 rad/s, °C Minimum G*/sin(delta), kPa	T 315	58 2.20	64 2.20	76 2.20
Dynamic Shear, Test Temp. at 10 rad/s, °C Maximum (delta), %	T 315	Note e 80	Note e 80	Note e 80
Elastic Recovery[f], Test Temp., °C Minimum recovery, %	T 301	25 75	25 75	25 65
PAV[g] Aging, Temperature, °C	R 28	100	100	110
RTFO Test and PAV Aged Binder				
Dynamic Shear, Test Temp. at 10 rad/s, °C Maximum G*sin(delta), kPa	T 315	16 5000	22 5000	31 5000
Creep Stiffness, Test Temperature, °C Maximum S-value, MPa Minimum M-value	T 313	-24 300 0.300	-18 300 0.300	-12 300 0.300

Notes:

a. Do not modify PG Polymer Modified using acid modification.

b. The Engineer waives this specification if the supplier is a Quality Supplier as defined by the Department's "Certification Program for Suppliers of Asphalt."

c. The Department allows ASTM D 5546 instead of AASHTO T 44

d. The Engineer waives this specification if the supplier certifies the asphalt binder can be adequately pumped and mixed at temperatures meeting applicable safety standards.

e. Test temperature is the temperature at which G*/sin(delta) is 2.2 kPa. A graph of log G*/sin(delta) plotted against temperature may be used to determine the test temperature when G*/sin(delta) is 2.2 kPa. A graph of (delta) versus temperature may be used to determine delta at the temperature when G*/sin(delta) is 2.2 kPa. The Engineer also accepts direct measurement of (delta) at the temperature when G*/sin(delta) is 2.2 kPa.

f. Tests without a force ductility clamp may be performed.

g. "PAV" means Pressurized Aging Vessel.

SAMPLING

- Provide a sampling device in the asphalt feed line connecting the plant storage tanks to the asphalt weighing system or spray bar. Make the sampling device accessible between 600 and 750 mm above the platform. Provide a receptacle for flushing the sampling device.
- Include with the sampling device a valve:

1. Between 10 and 20 mm in diameter
2. Manufactured in a manner that a one-liter sample may be taken slowly at any time during plant operations
3. Maintained in good condition

- Replace failed valves.
- In the Engineer's presence, take 2 one-liter samples per operating day. Provide round, friction top, one-liter containers for storing samples.

92-1.03 EXECUTION

- If asphalt is applied, you must comply with the heating and application specifications for liquid asphalt in Section 93, "Liquid Asphalts."

92-1.04 MEASUREMENT

- If the contract work item for asphalt is paid by mass, the Department measures asphalt tonnes by complying with the specifications for mass determination of liquid asphalt in Section 93, "Liquid Asphalts."
- The Engineer determines the asphalt mass from volumetric measurements if you:

1. Use a partial asphalt load.
2. Use asphalt at a location other than a mixing plant and no scales within 35 km are available and suitable.
3. Deliver asphalt in either of the following:

    3.1. A calibrated truck with each tank accompanied by its measuring stick and calibration card.
    3.2. A truck equipped with a calibrated thermometer that determines the asphalt temperature at the delivery time and with a vehicle tank meter complying with the specifications for weighing, measuring, and metering devices in Section 9-1.01, "Measurement of Quantities."

- If you furnish asphalt concrete from a mixing plant producing material for only one project, the Engineer determines the asphalt quantity by measuring the volume in the tank at the project's start and end provided the tank is calibrated and equipped with its measuring stick and calibration card.

- The Engineer determines pay quantities from volumetric measurements as follows:

1. Before converting the volume to mass, the Engineer reduces the measured volume to that which the asphalt would occupy at 15°C.
2. The Engineer uses 981 L/tonne and 1020 g/L for the average mass and volume for PG and PG Polymer Modified asphalt grades at 15°C.
3. The Engineer uses the Conversion Table in Section 93, "Liquid Asphalts."

SECTION 93: LIQUID ASPHALTS

Issue Date: November 3, 2006

The ninth paragraph of Section 93-1.04, "Measurement," of the Standard Specifications is amended to read:

• The following Legend and Conversion Table is to be used for converting volumes of liquid asphalt products, Grades 70 to 3000, inclusive, and paving asphalt Grades PG 58-22, PG 64-10, PG 64-16, PG 64-28, and PG 70-10, and Grades PG 58-34 PM, PG 64-28 PM, and PG 76-22 PM.

SECTION 95: EPOXY

Issue Date: March 16, 2007

Section 95, "Epoxy," of the Standard Specifications is amended to read:

95-1 GENERAL

95-1.01 DESCRIPTION

• These specifications are intended to specify epoxy that will meet service requirements for highway construction.

• Epoxy shall be furnished as 2 components, which shall be mixed together at the site of the work.

95-1.02 SAMPLING AND TESTING

• Epoxy shall not be used prior to sampling and testing unless its use is permitted prior to sampling and testing in conformance with the provisions in Section 6-1.07, "Certificates of Compliance."

• Tests will be conducted in conformance with the latest test methods of the American Society for Testing and Materials, and California Test Methods in use by the Transportation Laboratory.

• Epoxy components shall be formulated to maintain the specified properties for a minimum of one year. The Engineer may require additional testing of any epoxy component that has not been used within one year of manufacture.

95-1.03 PACKAGING, LABELING AND STORING

• Each component shall be packaged in containers of size proportional to the amount of that component in the mix so that one container of each component is used in mixing one batch of epoxy. The containers shall be of such design that all of the contents may be readily removed and shall be well sealed to prevent leakage. The containers and labeling shall meet U.S. Department of Transportation Hazardous Material Shipping Regulations, and the containers shall be of a material, or lined with a material, of such character as to resist any action by the components. Each container shall be clearly labeled with the ASTM Designation: C881 Class and Type; designation (Component A or B); manufacturer's name; date of manufacture; batch number (a batch shall consist of a single charge of all components in a mixing chamber); all directions for use (as specified elsewhere) and such warning or precautions concerning the contents as may be required by State or Federal Laws and Regulations. The manufacturer of the finished epoxy components shall furnish a Certificate of Compliance in conformance with the provisions in Section 6-1.07, "Certificates of Compliance," and a copy of the label for each material. The certificate shall include a list, by Title and Section, of the State and Federal packaging and labeling laws and regulations that the manufacturer has complied with.

• Attention is directed to the characteristic of some epoxy components to crystallize or thicken excessively prior to use when stored at temperatures below 2°C. Any material which shows evidence of crystallization or a permanent increase in viscosity or settling of pigments which cannot be readily redispersed with a paddle shall not be used.

95-1.04 DIRECTIONS FOR USE

• At the time of mixing, components A and B shall be at a temperature between 15°C and 30°C, unless otherwise specified. Any heating of the adhesive components shall be done by application of indirect heat. Immediately prior to mixing, each component shall be thoroughly mixed with a paddle. Separate paddles shall be used to stir each component. Immediately prior to use, the 2 components shall be thoroughly mixed together in the specified ratios. No solvent shall be added to any epoxy.

• After mixing, epoxies shall be placed in the work and any overlaying or inserted material which is to be bonded to the work by the epoxy shall also be placed before thickening of the epoxy has begun. Surfaces upon which epoxy is to be placed shall be free of rust, paint, grease, asphalt, and loose and deleterious material. When epoxy is used as a binder to make epoxy concrete or mortar, the 2 components of epoxy shall be thoroughly mixed together before the aggregate is added and, unless otherwise specified, the mix proportions shall consist of one part of binder to approximately 4 parts of aggregate, by volume. Aggregate for use in epoxy concrete and mortar shall be clean and shall have a moisture content of not more than 0.50-percent when tested by California Test 226. Surfaces against which epoxy concrete and mortar are to be placed shall be primed with a coat of the epoxy used just prior to placing the concrete or mortar.

95-2 TYPES OF EPOXIES

95-2.01 BINDER (ADHESIVE), EPOXY RESIN BASE

Classification:

• This specification covers a low viscosity epoxy formulated primarily for use in making high-strength epoxy concrete and epoxy mortar and in pressure grouting of cracks in concrete. For load bearing applications, use ASTM Designation: C 881, Type IV, Grade 1, Class B or C. Class B or C shall be used depending on the substrate and ambient temperatures. Use Grade B for atmospheric and surface temperatures as low as 4°C. Use Class C when temperatures are 15°C or higher. For non-load bearing applications use ASTM Designation: C881, Type I, Grade 1, Class B or C. Apply no thicker than recommended by the manufacturer. Thick sections of this epoxy are not suitable for use in freeze thaw environments. In a freeze-thaw environment, increase the aggregate loading to improve the properties of the epoxy concrete.

Directions for Use:

• Mix in conformance with the manufacturer's written recommendations. No more material shall be mixed than can be used within the pot-life from the time mixing operations are started.

95-2.02 (BLANK)

95-2.03 EPOXY RESIN ADHESIVE FOR BONDING NEW CONCRETE TO OLD CONCRETE

Classification:

• This specification covers a low viscosity paste epoxy formulated primarily for use in bonding new portland cement concrete to hardened portland cement concrete. The epoxy shall meet the specification requirements of ASTM Designation: C 881, Type V, Grade 2. This epoxy is available in 2 Classes: Class C for general use at temperature greater than 15°C and Class B for use when cure temperatures are below 15°C and above 4°C, or when a faster cure is required.

Directions for Use:

• The mixing ratio and use shall be in conformance with the manufacturer's written recommendations. When measuring as individual Components A and B, stir and tap the measuring containers to remove possible air voids. The ingredients in Components A and B shall be thoroughly dispersed such that each component forms a uniform paste. Do not mix more material than can be spread within the pot life from the time mixing operations are started. The spreading rate shall be sufficient to thoroughly coat the surface. Spread the mixed adhesive by brush or roller over blast-cleaned concrete at a rate recommended by the manufacturer. The new concrete shall be placed against the adhesive coating on the old concrete before the adhesive has set. If the adhesive has set and is not tacky prior to placing the new concrete, a new coating of adhesive shall be applied.

95-2.04 RAPID SET EPOXY ADHESIVE FOR PAVEMENT MARKERS

Classification:

• This specification covers a high viscosity paste, rapid set epoxy formulated primarily for use in bonding pavement markers to portland cement concrete and asphalt concrete. The adhesive shall meet ASTM Designation: C 881, Type IV, Grade 3, Class B and C except that the gel time may be shorter than 30 minutes. The adhesive shall conform to these requirements and the following.

Characteristics of Combined Components:

• All tests shall be performed in conformance with the requirements in California Test 434.

Property	Requirement
Gel time, minutes, maximum, at 25°C	30
Bond Strength to Concrete, Time, minutes (maximum) to reach not less than 1.4 MPa	
at 25°C ±1°C	35
at 10°C ±1°C	45
Slant Shear Strength	
2 days at 25°C ±1°C, MPa	7
14 days at 25°C ±1°C, plus water soak, MPa	10.5
Tensile Adhesion and Cohesion	
Ceramic marker bottom, MPa	4.8 min.
Ceramic marker bottom, including post cure, MPa	4.8 min.
Retroreflective pavement marker bottom, MPa	3.4 min.
Color of mixed epoxy	gray
Glass transition temperature, Tg, samples conditioned at 25°C for 24 hours, ASTM Designation: D 4065	30°C min.

Directions for Use:

• Components A and B shall be mixed in conformance with the manufacturer's written recommendations. When an automatic proportioning and mixing machine is used, the temperature of the components shall be maintained by indirect heating or cooling, so that the adhesive will meter, mix and extrude properly. The maximum temperature shall be such that after proper mixing no excess adhesive shall flow from under the marker other than that specified in Section 85-1.06, "Placement."

95-2.05 STANDARD SET EPOXY ADHESIVE FOR PAVEMENT MARKERS

Classification:

• This specification covers a high viscosity paste standard set epoxy formulated primarily for use in bonding pavement markers to portland cement concrete and asphalt concrete. The epoxy shall meet ASTM Designation: C 881, Type IV, Viscosity Grade 3, Classes B or C, except that the gel time may be shorter than 30 minutes.

Characteristics of Combined Components:

• All tests shall be performed in conformance with the requirements in California Test 434.

Property	Requirement
Gel time, minutes, maximum, at 25°C	30
Bond Strength to Concrete, Time (maximum) to reach not less than 1.4 MPa	
at 25°C ±1°C	3.5 hours
at 13°C ±1°C	24 hours
Slant Shear Strength	
2 days at 25°C ±1°C, MPa	7 min.
14 days at 25°C ±1°C, plus water soak, MPa	10.5 min.
Tensile Adhesion and Cohesion	
Ceramic marker bottom, MPa	4.8 min.
Ceramic marker bottom, including post cure, MPa	4.8 min.
Reflective pavement marker bottom, MPa	3.4 min.
Color of Mixed Components	gray
Glass transition temperature, Tg, samples conditioned at 25°C for 24 hours, ASTM Designation: D 4065	30°C min.

Directions for Use:

• Components A and B shall be mixed in conformance with the manufacturer's written recommendations. When an automatic proportioning and mixing machine is used, the temperature of the components shall be maintained by indirect heating or cooling, so that the adhesive will meter, mix and extrude properly. The maximum temperature shall be such that after proper mixing no excess adhesive shall flow from under the marker other than that specified in Section 85-1.06, "Placement."

95-2.06 (BLANK)

95-2.07 (BLANK)

95-2.08 (BLANK)

95-2.09 EPOXY SEALANT FOR INDUCTIVE LOOPS

Classification:

• This specification covers a high viscosity liquid epoxy formulated primarily for use in sealing inductive wire loops and leads imbedded in asphalt concrete and portland cement concrete for traffic signal controls and vehicle counters. This epoxy is to be used for repair work on existing spalls, cracks and other deformations in and around saw cuts housing inductor loops and leads. The rapid cure allows minimum traffic delay. This sealant is suitable for use in freeze-thaw areas. The epoxy shall meet ASTM Designation: C 881, Type I, Grade 2 and the following requirements.

Characteristics of Combined Components:

• All tests shall be performed in conformance with the requirements in California Test 434.

Property	Requirement
Gel time, minutes, maximum	30
On 3-mm cast sheet, cured 18 hours at 25°C, + 5 hours at 70°C	
Tensile Strength, MPa	2.7 min.
Elongation, percent	90 min.
Shore D Hardness	45 min.

Directions for Use:

- Saw cuts shall be cleaned with compressed air to remove all excess moisture and debris. For repairing damaged saw cuts, all loose spalled material shall be cleaned away from the saw cut, chipping back to sound asphalt concrete or portland cement concrete and all loose material cleaned from loop wires.
- The mixing ratio shall be in conformance with the manufacturer's recommendations. No more material shall be mixed than can be used within the gel time from the time mixing operations are started.
- When automatic mixing equipment is used for mixing the sealant, the provisions in the twelfth paragraph in Section 85-1.06, "Placement," shall apply.

95-2.10 (BLANK)

95-2.11 EPOXY RESIN ADHESIVE FOR INJECTION GROUTING OF PORTLAND CEMENT CONCRETE PAVEMENTS

Directions for Use:

- Both components and the mixed material shall contain no solvents. The mixing ratio of the components in terms of volume and mass shall be clearly stated. The material shall be suitable for use in the mixing equipment used by the applicator. Epoxy adhesive samples shall be furnished to the Engineer for testing at least 12 days before the expected time of use.

Characteristics of Adhesive:

Test[a]	California Test	Requirement
Brookfield Viscosity, No. 3 Spindle at 20 rpm, Pa·s at 25°C	434, Part 4	0.9 max.
Gel time, minutes	434, Part 1	2 to 15
Slant Shear Strength on Dry Concrete, MPa, after 4 days of cure in air at 25°C ±1°C	434, Part 5[b]	41.4 min.
Slant Shear Strength on Wet Concrete, MPa, after 4 days of cure in air at 25°C ±1°C	434, Part 5[b]	21.1 min.
Tensile Strength, Mpa	434, Part 7, except test after 4 days of cure at 25°C ±1°C	31.0 min.
Elongation, %	434, Part 7, except test after 4 days of cure at 25°C ±1°C	10 max.

a The mixing ratio used will be that recommended by the manufacturer.

b For slant shear strength on concrete, delete Sections B-1 and B-5 of California Test 434, Part 5. For dry concrete, use Step "2" below only. For wet concrete, use both Steps "1" & "2":

1 Soak blocks in water for 24 hours at 25°C ±1°C. Remove and wipe off excess water.

2 Mix epoxy as described in California Test 434, Part 1, and apply a coat approximately 250 µm thick to each diagonal surface. Place four 3-mm square pieces of shim stock 305 µm thick on one block to control final film thickness. Before pressing the coated surfaces together, leave the blocks so that the coated surfaces are horizontal until the epoxy reacts slightly to prevent excessive flow.

END OF AMENDMENTS

5-1.__ PROJECT INFORMATION

The information in this section has been compiled specifically for this project and is made available for bidders and Contractors. Other information referenced in the Standard Specifications and these special provisions do not appear in this section. The information is subject to the conditions and limitations set forth in Section 2-1.03, "Examination of Plans, Specifications, Contract, and Site of Work," and Section 6-2, "Local Materials," of the Standard Specifications. Bidders and Contractors shall be responsible for knowing the procedures for obtaining information.

Information attached to the project plans is as follows:

A. Log of Test Borings.

Information included in the Information Handout provided to bidders and Contractors is as follows:

A. Final Foundation Report, for Design and Construction of Temporary Foundation for East Tie-In Structure, Yerba Buena Island, SFOBB.

5-1.__ HAZARDOUS MATERIAL, GENERAL

Attention is directed to "Earthwork" of these special provisions regarding the removal and disposal of hazardous material described in this section.

Contaminants have been discovered through testing within the project limits. Testing consisted of collecting and analyzing in situ samples from within the project limits. Summary tables of the test results are included in the "Materials Information." The complete report entitled "Site Investigation Report, SFOBB East Span Seismic Safety Project, Yerba Buena Island" is available for inspection at the office of the Duty Senior, 111 Grand Avenue, Oakland, CA 94612, email: duty_senior_district04@dot.ca.gov, telephone (510) 286-5209, and fax number: (510) 622-1805. These test results have been used for disposal characterization of material within the excavation limits and shall not be construed as identifying all locations within the project limits that contain contaminants.

Wherever the following terms are used in the contract documents, the meaning and intent shall be interpreted as provided below:

A. Hazardous material – Material that contains contaminants at concentrations equal to or greater than the threshold limit concentrations listed in Section 66261.24 of Title 22 of the California Code of Regulations.

Characterization and disposal of additional material resulting from excavations performed outside of the pay limits shown on the plans, specified in the Standard Specifications, or specified or directed by the Engineer, for the Contractor's convenience, shall be at the Contractor's expense. This resultant material shall be presumed to be either non-hazardous material or hazardous material if the test results for the location indicate that the material being excavated is non-hazardous material or hazardous material. The Contractor shall dispose of the resultant material in conformance with the provisions in "Earthwork" of these special provisions. When the material must be removed from highway right of way, the Contractor shall furnish replacement material suitable for the purpose intended in conformance with the provisions in Section 19, "Earthwork," of the Standard Specifications.

APPLICABLE RULES AND REGULATIONS

Excavation, transport and disposal of hazardous material shall be in conformance with the rules and regulations of the following agencies:

1. United States Department of Transportation (USDOT)
2. United States Environmental Protection Agency (USEPA)
3. California Environmental Protection Agency (CAL-EPA)
4. Department of Toxic Substance Control (DTSC)
5. Integrated Waste Management Board
6. Regional Water Quality Control Board, Region 2 (RWQCB)
7. State Air Resources Board
8. Bay Area Air Quality Management District (BAAQMD)
9. California Division of Occupational Safety and Health Administration (CAL-OSHA)

PERMITS AND LICENSES

The Contractor shall procure all permits and licenses, pay all charges and fees, and give all notices necessary and incident to the due and lawful prosecution of the work, including

registration for transporting vehicles carrying hazardous material, in conformance with the provisions in Section 7-1.04, "Permits and Licenses," of the Standard Specifications.

The Engineer will obtain the Environmental Protection Agency Generator Identification Number and Board of Equalization Identification Number and sign all manifests as the Generator.

SITE HEALTH AND SAFETY PLAN

The Contractor shall prepare a detailed Site Health and Safety Plan for all site personnel, including State personnel, that identifies potential health and safety hazards associated with each operation and specifies work practices that will be used to protect workers from those hazards in conformance with the DTSC and CAL-OSHA regulations. At a minimum, the Site Health and Safety Plan shall identify key site safety personnel, describe risks associated with the work, describe training requirements, describe appropriate personal protective equipment, describe any site-specific medical surveillance requirements, describe any periodic air monitoring requirements, define appropriate site work zones, and describe any decontamination requirements. The Site Health and Safety Plan shall be submitted at least 15 working days prior to beginning any excavation work for review and acceptance by the Engineer. Prior to submittal, the Contractor shall have the Site Health and Safety Plan approved by an Industrial Hygienist certified by the American Board of Industrial Hygiene. Subcontractors shall use the Site Health and Safety Plan prepared by the Contractor or prepare and submit a separate Site Health and Safety Plan in conformance with the provisions in this section.

SAFETY TRAINING

Prior to performing any work, all personnel, including State personnel, shall complete a safety training program that communicates the potential health and safety hazards associated with work on the site and instructs the personnel in procedures for doing the work safely. The level of training provided shall be consistent with the personnel's job function and conform to CAL-OSHA regulations. The training, including subsequent training required until completion of the project, shall be provided by the Contractor.

The Contractor shall provide a certification of completion of the Safety Training Program to all personnel. Personal protective equipment required by State personnel to inspect the work shall be provided by the Contractor. The number of State personnel requiring the above mentioned safety training program and personal protective equipment will be 25.

PAYMENT

Full compensation for conforming to the requirements of this section shall be considered as included in the prices paid for the various contract items of work affected by this section and no additional compensation will be allowed therefor.

8-3.__ WELDING

GENERAL

Flux cored welding electrodes conforming to the requirements of AWS A5.20 E6XT-4 or E7XT-4 shall not be used to perform welding for this project.

Wherever reference is made to the following AWS welding codes in the Standard Specifications, on the plans, or in these special provisions, the year of adoption for these codes shall be as listed:

AWS Code	Year of Adoption
D1.1	2006
D1.4	2005
D1.5	2002
D1.6	1999

Requirements of the AWS welding codes shall apply unless otherwise specified in the Standard Specifications, on the plans, or in these special provisions. Wherever the abbreviation AWS is used, it shall be equivalent to the abbreviations ANSI/AWS or AASHTO/AWS.

Section 6.1.1.1 of AWS D1.5 is replaced with the following:

Quality Control (QC) shall be the responsibility of the Contractor. As a minimum, the Contractor shall perform inspection and testing of each weld joint prior to welding, during welding, and after welding as specified in this section and as necessary to ensure that materials and workmanship conform to the requirements of the contract documents.

Unless otherwise specified, Sections 6.1.3 through 6.1.4.3 of AWS D1.1, Section 7.1.2 of AWS D1.4, and Sections 6.1.1.2 through 6.1.3.3 of AWS D1.5 are replaced with the following:

The QC Inspector shall be the duly designated person who acts for and on behalf of the Contractor for inspection, testing, and quality related matters for all welding.

Quality Assurance (QA) is the prerogative of the Engineer. The QA Inspector is the duly designated person who acts for and on behalf of the Engineer.

The QC Inspector shall be responsible for quality control acceptance or rejection of materials and workmanship, and shall be currently certified as an AWS Certified Welding Inspector (CWI) in conformance with the requirements in AWS QC1, "Standard for AWS Certification of Welding Inspectors."

The QC Inspector may be assisted by an Assistant QC Inspector provided that this individual is currently certified as an AWS Certified Associate Welding Inspector (CAWI) in conformance with the requirements in AWS QC1, "Standard for AWS Certification of Welding Inspectors." The Assistant QC Inspector may perform inspection under the direct supervision of the QC Inspector provided the assistant is always within visible and audible range of the QC Inspector. The QC Inspector shall be responsible for signing all reports and for determining if welded materials conform to workmanship and acceptance criteria. The ratio of QC Assistants to QC Inspectors shall not exceed 5 to 1.

When the term "Inspector" is used without further qualification, it shall refer to the QC Inspector.

When any work is welded in conformance with the provisions in Section 75, "Miscellaneous Metal," of the Standard Specifications, not including Section 75-1.035, "Bridge Joint Restrainer Units," of the Standard Specifications, Section 6.1.4 of AWS D1.1 is replaced with the following:

The QC Inspector shall be responsible for quality control acceptance or rejection of materials and workmanship and shall be currently certified as an AWS CWI in conformance with the requirements in AWS QC1, "Standard for AWS Certification of Welding Inspectors," or as a Welding Inspector Specialist (WIS) in conformance with the requirements in AWS B5.2, "Specification for the Qualification of Welding Inspector Specialists and Welding Inspector Assistants."

Section 6.14.6, "Personnel Qualification," of AWS D1.1, Section 7.8, "Personnel Qualification," of AWS D1.4, and Section 6.1.3.4, "Personnel Qualification," of AWS D1.5 are replaced with the following:

Personnel performing nondestructive testing (NDT) shall be qualified and certified in conformance with the requirements of the American Society for Nondestructive Testing (ASNT) Recommended Practice No. SNT-TC-1A and the Written Practice of the NDT firm. The Written Practice of the NDT firm shall meet or exceed the guidelines of the ASNT Recommended Practice No. SNT-TC-1A. Individuals who perform NDT, review the results, and prepare the written reports shall be either:

A. Certified NDT Level II technicians, or;
B. Level III technicians who hold a current ASNT Level III certificate in that discipline and are authorized and certified to perform the work of Level II technicians.

Section 6.5.4 of AWS D1.5 is replaced with the following:

The QC Inspector shall inspect and approve each joint preparation, assembly practice, welding technique, joint fit-up, and the performance of each welder, welding operator, and tack welder to make certain that the applicable requirements of this code and the approved Welding Procedure Specification (WPS) are met. The QC Inspector shall examine the work to make certain that it meets the requirements of Sections 3 and 6.26. The size and contour of all welds shall be measured using suitable gages. Visual inspection for cracks in welds and base metal, and for other discontinuities shall be aided by strong light, magnifiers, or such other devices as may be helpful. Acceptance criteria different from those specified in this code may be used when approved by the Engineer.

Section 6.6.5, "Nonspecified NDT Other than Visual," of AWS D1.1, Section 7.6.5 of AWS D1.4 and Section 6.6.5 of AWS D1.5 shall not apply.

For any welding, the Engineer may direct the Contractor to perform NDT that is in addition to the visual inspection or NDT specified in the AWS or other specified welding codes, in the Standard Specifications, or in these special provisions. Except as provided for in these special provisions, additional NDT required by the Engineer, and associated repair work, will be paid for as extra work as provided in Section 4-1.03D, "Extra Work," of the Standard Specifications. Prior to release of welded material by the Engineer, if testing by NDT methods other than those originally specified discloses an attempt to defraud or reveals a gross nonconformance, all costs associated with the repair of the deficient area, including NDT of the weld and of the repair, and any delays caused by the repair, shall be at the Contractor's expense. A gross nonconformance is defined as the sum of planar type rejectable indications in more than 20 percent of the tested length.

When less than 100 percent of NDT is specified for any weld, it is expected that the entire length of weld meet the specified acceptance-rejection criteria. Should any welding deficiencies be discovered by additional NDT directed or performed by the Engineer that utilizes the same NDT method as that originally specified, all costs associated with the repair of the deficient area, including NDT of the weld and of the weld repair, and any delays caused by the repair, shall be at the Contractor's expense.

Repair work to correct welding deficiencies discovered by visual inspection directed or performed by the Engineer, and any associated delays or expenses caused to the Contractor by performing these repairs, shall be at the Contractor's expense.

The Engineer shall have the authority to verify the qualifications or certifications of any welder, QC Inspector, or NDT personnel to specified levels by retests or other means approved by the Engineer.

Inspection and approval of all joint preparations, assembly practices, joint fit-ups, welding techniques, and the performance of each welder, welding operator, and tack welder shall be documented by the QC Inspector on a daily basis for each day welding is performed. For each inspection, including fit-up, Welding Procedure Specification (WPS) verification, and final weld inspection, the QC Inspector shall confirm and document compliance with the requirements of the AWS or other specified code criteria and the requirements of these special provisions on all welded joints before welding, during welding, and after the completion of each weld.

In addition to the requirements specified in the applicable code, the period of effectiveness for a welder's or welding operator's qualification shall be a maximum of 3 years for the same weld process, welding position, and weld type. If welding will be performed without gas shielding, then qualification shall also be without gas shielding. Excluding welding of fracture critical members, a valid qualification at the beginning of work on a contract will be acceptable for the entire period of the contract, as long as the welder's or welding operator's work remains satisfactory.

In addition to the requirements of AWS D1.1, welding procedures qualification for work welded in conformance with that code shall conform to the following requirements:

A. The travel speed, amperage, and voltage values that are used for tests conducted per AWS D1.1, Section 4.1.1, shall be consistent for each pass in a weld joint and shall in no case vary by more than ±10 percent for travel speed, ±10 percent for amperage, and ±7 percent for voltage as measured from a predetermined target value or average within each weld pass. The travel speed shall in no case vary by more than ±15 percent when using submerged arc welding.
B. When a nonstandard weld joint is to be made using a combination of WPSs, a single test may be conducted combining the WPSs to be used in production, provided the essential variables, including weld bead placement, of each process are limited to those established in Table 4.5.

In addition to the requirements of AWS D1.5, Section 5.12 or 5.13, welding procedures qualification for work welded in conformance with that code shall conform to the following requirements:

A. Unless considered prequalified, fillet welds shall be qualified in each position. The fillet weld soundness test shall be conducted using the essential variables of the WPS as established by the Procedure Qualification Record (PQR).
B. For qualification of joints that do not conform to Figures 2.4 and 2.5 of AWS D1.5, a minimum of two WPS qualification tests are required. The tests shall be conducted using both Figure 5.1 and Figure 5.3. The test conforming to Figure 5.1 shall be conducted in conformance with AWS D1.5, Section 5.12 or 5.13. The test conforming to Figure 5.3 shall be conducted using the welding electrical parameters that were established for the test conducted conforming to Figure 5.1. The ranges of welding electrical parameters established during welding per Figure 5.1 in conformance with AWS D1.5, Section 5.12, shall be further restricted according to the limits in Table 5.3 during welding per Figure 5.3.
C. Multiple zones within a weld joint may be qualified. The travel speed, amperage, and voltage values that are used for tests conducted per AWS D1.5 Section 5.13 shall be

consistent for each pass in a weld joint, and shall in no case vary by more than ±10 percent for travel speed, ±10 percent for amperage, and ±7 percent for voltage as measured from a predetermined target value or average within each weld pass or zone. The travel speed shall in no case vary by more than ±15 percent when using submerged arc welding.

D. For a WPS qualified in conformance with AWS D1.5 Section 5.13, the values to be used for calculating ranges for current and voltage shall be based on the average of all weld passes made in the test. Heat input shall be calculated using the average of current and voltage of all weld passes made in the test for a WPS qualified in conformance with Section 5.12 or 5.13.
E. Macroetch tests are required for WPS qualification tests, and acceptance shall be per AWS D1.5 Section 5.19.3.
F. When a nonstandard weld joint is to be made using a combination of WPSs, a test conforming to Figure 5.3 may be conducted combining the WPSs to be used in production, provided the essential variables, including weld bead placement, of each process are limited to those established in Table 5.3.
G. Prior to preparing mechanical test specimens, the PQR welds shall be inspected by visual and radiographic tests. Backing bar shall be 75 mm in width and shall remain in place during NDT testing. Results of the visual and radiographic tests shall comply with AWS D1.5 Section 6.26.2, excluding Section 6.26.2.2. Test plates that do not comply with both tests shall not be used.

WELDING QUALITY CONTROL

Welding quality control shall conform to the requirements in the AWS or other specified welding codes, the Standard Specifications, and these special provisions.

Unless otherwise specified, welding quality control shall apply when any work is welded in conformance with the provisions in Section 49, "Piling," Section 52, "Reinforcement," Section 55, "Steel Structures," or Section 75-1.035, "Bridge Joint Restrainer Units," of the Standard Specifications.

All welding will require inspection by the Engineer. The Contractor shall request inspection at least 3 working days prior to the beginning of welding for locations within California and 5 working days for locations outside of California. The Contractor shall request inspection at:

http://www.dot.ca.gov/hq/esc/Translab/smbforms.htm

Continuous inspection shall be provided when any welding is being performed. Continuous inspection, as a minimum, shall include having a QC Inspector within such close proximity of all welders or welding operators so that inspections by the QC Inspector of each welding operation at each welding location does not lapse for a period exceeding 30 minutes.

When joint weld details that are not prequalified to the details of Section 3 of AWS D1.1 or to the details of Figure 2.4 or 2.5 of AWS D1.5 are proposed for use in the work, the joint details, their intended locations, and the proposed welding parameters and essential variables, shall be approved by the Engineer. The Contractor shall allow the Engineer 2 weeks to complete the review of the proposed joint detail locations. In the event the Engineer fails to complete the review within the time allowed, and if, in the opinion of the Engineer, completion of the work is delayed or interfered with by reason of the Engineer's delay in completing the review, the Contractor will be compensated for any resulting loss, and an extension of time will be granted, in the same manner as provided for in Section 8-1.09, "Right of Way Delays," of the Standard Specifications. Upon approval of the proposed joint detail locations and qualification of the

proposed joint details, welders and welding operators using these details shall perform a qualification test plate using the WPS variables and the joint detail to be used in production. The test plate shall have the maximum thickness to be used in production and a minimum length of 460 mm. The test plate shall be mechanically and radiographically tested. Mechanical and radiographic testing and acceptance criteria shall be as specified in the applicable AWS codes.

The Engineer will witness all qualification tests for WPSs that were not previously approved by the Department. Unless otherwise specified, an approved independent third party will witness the qualification tests for welders or welding operators. The independent third party shall be a current CWI and shall not be an employee of the contractor performing the welding. The Contractor shall allow the Engineer 2 weeks to review the qualifications and copy of the current certification of the independent third party. In the event the Engineer fails to complete the review within the time allowed, and if, in the opinion of the Engineer, completion of the work is delayed or interfered with by reason of the Engineer's delay in completing the review, the Contractor will be compensated for any resulting loss, and an extension of time will be granted, in the same manner as provided for in Section 8-1.09, "Right of Way Delays," of the Standard Specifications. The Contractor shall notify the Engineer one week prior to performing any qualification tests. Witnessing of qualification tests by the Engineer shall not constitute approval of the intended joint locations, welding parameters, or essential variables.

The Contractor shall designate in writing a welding Quality Control Manager (QCM). The QCM shall be responsible directly to the Contractor for the quality of welding, including materials and workmanship, performed by the Contractor and subcontractors.

The QCM shall be the sole individual responsible to the Contractor for submitting, receiving, reviewing, and approving all correspondence, required submittals, and reports to and from the Engineer. The QCM shall be a registered professional engineer or shall be currently certified as a CWI.

Unless the QCM is hired by a subcontractor providing only QC services, the QCM shall not be employed or compensated by any subcontractor, or by other persons or entities hired by subcontractors, who will provide other services or materials for the project. The QCM may be an employee of the Contractor.

Welding inspection personnel or NDT firms to be used in the work shall not be employed or compensated by any subcontractor, or by other persons or entities hired by subcontractors, who will provide other services or materials for the project, except for the following conditions:

A. The work is welded in conformance with AWS D1.5 and is performed at a permanent fabrication or manufacturing facility that is certified under the AISC Quality Certification Program, Category Cbr, Major Steel Bridges and Fracture Critical endorsement F, when applicable.
B. The welding is performed on pipe pile material at a permanent pipe manufacturing facility authorized to apply the American Petroleum Institute (API) monogram for API 5L pipe.

For welding performed at such facilities, the inspection personnel or NDT firms may be employed or compensated by the facility performing the welding provided the facility maintains a QC program that is independent from production.

Prior to submitting the Welding Quality Control Plan (WQCP) required herein, a prewelding meeting between the Engineer, the Contractor's QCM, and a representative from each entity performing welding or inspection for this project, shall be held to discuss the requirements for the WQCP.

The Contractor shall submit to the Engineer, in conformance with the provisions in Section 5-1.02, "Plans and Working Drawings," of the Standard Specifications, 2 copies of a separate WQCP for each subcontractor or supplier for each item of work for which welding is to be performed.

The Contractor shall allow the Engineer 2 weeks to review the WQCP submittal after a complete plan has been received. No welding shall be performed until the WQCP is approved in writing by the Engineer. In the event the Engineer fails to complete the review within the time allowed, and if, in the opinion of the Engineer, completion of the work is delayed or interfered with by reason of the Engineer's delay in completing the review, the Contractor will be compensated for any resulting loss, and an extension of time will be granted, in the same manner as provided for in Section 8-1.09, "Right of Way Delays," of the Standard Specifications.

An amended WQCP or any addendum to the approved WQCP shall be submitted to, and approved in writing by the Engineer, for proposed revisions to the approved WQCP. An amended WQCP or addendum will be required for revisions to the WQCP, including but not limited to a revised WPS; additional welders; changes in NDT firms, QC, or NDT personnel or procedures; or updated systems for tracking and identifying welds. The Engineer shall have one week to complete the review of the amended WQCP or addendum. Work affected by the proposed revisions shall not be performed until the amended WQCP or addendum has been approved. In the event the Engineer fails to complete the review within the time allowed, and if, in the opinion of the Engineer, completion of the work is delayed or interfered with by reason of the Engineer's delay in completing the review, the Contractor will be compensated for any resulting loss, and an extension of time will be granted, in the same manner as provided for in Section 8-1.09, "Right of Way Delays," of the Standard Specifications.

Information regarding the contents, format, and organization of a WQCP, is available at the Transportation Laboratory and at:

http://www.dot.ca.gov/hq/esc/Translab/smbresources.htm

After final approval of the WQCP, amended WQCP, or addendum, the Contractor shall submit 7 copies to the Engineer of the approved documents. A copy of the Engineer approved document shall be available at each location where welding is to be performed.

A daily production log for welding shall be kept for each day that welding is performed. The log shall clearly indicate the locations of all welding. The log shall include the welders' names, amount of welding performed, any problems or deficiencies discovered, and any testing or repair work performed, at each location. The daily report from each QC Inspector shall also be included in the log.

The following items shall be included in a Welding Report that is to be submitted to the Engineer within 2 weeks following the performance of any welding:

A. A daily production log.
B. Reports of all visual weld inspections and NDT.
C. Radiographs and radiographic reports, and other required NDT reports.
D. A summary of welding and NDT activities that occurred during the reporting period.
E. Reports of each application of heat straightening.
F. A summarized log listing the rejected lengths of weld by welder, position, process, joint configuration, and piece number.
G. Documentation that the Contractor has evaluated all radiographs and other nondestructive tests and corrected all rejectable deficiencies, and that all repaired welds have been reexamined using the required NDT and found acceptable.

The following information shall be clearly written on the outside of radiographic envelopes: name of the QCM, name of the nondestructive testing firm, name of the radiographer, date, contract number, complete part description, and all included weld numbers, report numbers, and station markers or views, as detailed in the WQCP. In addition, all interleaves shall have clearly written on them the part description and all included weld numbers and station markers or views, as detailed in the WQCP. A maximum of 2 pieces of film shall be used for each interleave.

Reports of all visual inspections and NDT shall be signed by the inspector or technician and submitted daily to the QCM for review and signature prior to submittal to the Engineer. Corresponding names shall be clearly printed or typewritten next to all signatures. Reports of all NDT, whether specified, additional, or informational, performed by the Contractor shall be submitted to the Engineer.

The Engineer will review the Welding Report to determine if the Contractor is in conformance with the WQCP. Unless otherwise specified, the Engineer shall be allowed 2 weeks to review the report and respond in writing after the complete Welding Report has been received. Prior to receiving notification from the Engineer of the Contractor's conformance with the WQCP, the Contractor may encase in concrete or cover welds for which the Welding Report has been submitted. However, should the Contractor elect to encase or cover those welds prior to receiving notification from the Engineer, it is expressly understood that the Contractor shall not be relieved of the responsibility for incorporating material in the work that conforms to the requirements of the plans and specifications. Material not conforming to these requirements will be subject to rejection. Should the Contractor elect to wait to encase or cover welds pending notification by the Engineer, and in the event the Engineer fails to complete the review within the time allowed, and if, in the opinion of the Engineer, completion of the work is delayed or interfered with by reason of the Engineer's delay in completing the review, the Contractor will be compensated for any resulting loss, and an extension of time will be granted, in the same manner as provided for in Section 8-1.09, "Right of Way Delays," of the Standard Specifications.

In addition to the requirements in AWS D1.1 and AWS D1.5, second-time excavations of welds or base metal to repair unacceptable discontinuities, regardless of NDT method, and all repairs of cracks require prior approval of the Engineer.

The Engineer shall be notified immediately in writing when welding problems, deficiencies, base metal repairs, or any other type of repairs not submitted in the WQCP are discovered, and also of the proposed repair procedures to correct them. For requests to perform second-time repairs or repairs of cracks, the Contractor shall include an engineering evaluation of the proposed repair. The engineering evaluation, at a minimum, shall address the following:

A. What is causing each defect?
B. Why the repair will not degrade the material properties?
C. What steps are being taken to prevent similar defects from happening again?

The Contractor shall allow the Engineer one week to review these procedures. No remedial work shall begin until the repair procedures are approved in writing by the Engineer. In the event the Engineer fails to complete the review within the time allowed, and if, in the opinion of the Engineer, completion of the work is delayed or interfered with by reason of the Engineer's delay in completing the review, the Contractor will be compensated for any resulting loss, and an extension of time will be granted, in the same manner as provided for in Section 8-1.09, "Right of Way Delays," of the Standard Specifications.

The QCM shall sign and furnish to the Engineer, a Certificate of Compliance in conformance with the provisions in Section 6-1.07, "Certificates of Compliance," of the Standard

Specifications for each item of work for which welding was performed. The certificate shall state that all of the materials and workmanship incorporated in the work, and all required tests and inspections of this work, have been performed in conformance with the details shown on the plans, the Standard Specifications, and these special provisions.

PAYMENT

Full compensation for conforming to the requirements of "Welding" shall be considered as included in the contract prices paid for the various items of work involved and no additional compensation will be allowed therefor.

SECTION 9. DESCRIPTION OF BRIDGE WORK

The bridge work to be done consists, in general, of constructing concrete piles, footings, columns, and bent cap for Bent 52A, and concrete piles and footings for skid bents for the following structure, as shown on the plans:

SAN FRANCISCO OAKLAND BAY BRIDGE
EAST SPAN SEISMIC SAFETY PROJECT
TEMPORARY BYPASS STRUCTURE (EAST TIE-IN)
(Bridge No. 34-0006 TEMP)

SECTION 10. CONSTRUCTION DETAILS

SECTION 10-1. GENERAL

10-1.__ CONSTRUCTION SURVEYING

This work shall consist of construction surveying by the Contractor using Global Positioning System (GPS) surveying methods, including Static and Real-time kinematic (RTK) GPS, conventional total station survey systems (TSSS), leveling instruments and rods, and other surveying means to establish and control the lines and grades required for completion of the bridge work as shown on the plans and in these special provisions and as specified in the Standard Specifications. Construction surveying shall include geometric control for the foundations.

Except as otherwise provided herein for establishment of Project horizontal and vertical control and right-of-way staking (on land only), by the Engineer, all other specifications, including the first two paragraphs of Section 5-1.07, "Lines and Grades," of the Standard Specifications, which require the establishment of lines and grades by the Engineer, shall not apply.

The Engineer will determine the horizontal and vertical survey control data to be used for the project and will provide survey control referenced to the California Coordinate System 1983 (1991.35), Zone 3 coordinates and NGVD 1929 at western end of the Oakland Mole and the eastern side of Yerba Buena Island. The Contractor shall verify the accuracy of the control data prior to initiating construction surveying. The Engineer will also provide a control diagram for the monumentation. The Contractor's attention is directed to the third paragraph of Section 5-1.07, "Lines and Grades," of the Standard Specifications with regard to preserving control monuments furnished by the State.

Stake markings shall be in accordance with Chapter 12, "Construction Surveys," of the California Department of Transportation "Survey Manual."

Before starting any construction survey work, the Contractor shall submit a Survey Plan to the Engineer. The Survey Plan shall include working drawings and supplements in conformance to "Working Drawings" of these special provisions.

The working drawing submittal shall include the following:

A. Stake layout;
B. Location of all control points;
C. Datum information; and
D. Bridge alignment.

The supplement to the working drawing shall show the Contractor's proposed methods of construction surveying and a quality control plan for surveying, and shall include the following:

A. A detailed narrative of the step-by-step surveying control process;
B. A listing of the types of methods and the related item(s) to be constructed;
C. Detailed calculation forms, and a set of calculation for each type of survey method, including sample input and output of computer programs;
D. Identifications of all measuring equipment, procedures; and
E. Qualifications of personnel who will carry out construction surveying, and for the Land Surveyor of record.

Prior to submitting the Survey Plan, the Contractor and any entity performing surveying for this project shall hold a pre-survey meeting with the Engineer to the proposed procedures. The pre-survey meeting shall be held within the San Francisco Bay Area.

The Contractor shall allow 15 working days for the Engineer to review the Survey Plan after a complete plan has been submitted. If revisions are required, as determined by the Engineer, the Contractor shall revise and resubmit the Survey Plan. The Contractors shall allow 10 working days for the Engineer to review the revisions. No construction surveying shall begin until the Engineer approves the written proposal.

The Contractor shall make the calculations necessary to establish the exact position of the work from the Project control points, and shall verify horizontal and vertical locations of all existing structural elements and all as built locations of adjacent structures that directly impact the final plan geometry. Calculations, survey notes computer output, and other construction survey notes and records shall be neat, legible, and accurate. Copies of the survey calculations, notes and other records shall be submitted to the Engineer on a weekly basis.

The Survey Plan, and the calculations, survey notes and other records submitted to establish the exact position of the work shall be completed under the direction of and signed by a Land Surveyor who is licensed by the State of California.

The Contractor shall submit to the Engineer, a schedule of values detailing the cost breakdown of the contract lump sum item for construction surveying. The schedule of values shall reflect the items, work, quantities and costs required to do the surveying required by these special provisions. The Contractor shall be responsible for the accuracy of the quantities and costs used in the schedule of values submitted for approval.

The sum of the amounts for the items and work listed in the schedule of values shall be equal to the contract lump sum price for construction surveying. Changes in the schedule of values,

due to changes by the Contractor in the items and work listed, shall not result in a change in the contract lump sum price for construction surveying.

The schedule of values will be used only to determine progress payments for construction surveying during the progress of the work. No payment for construction surveying will be made until the schedule of values is approved in writing by the Engineer.

PAYMENT

The contract lump sum price paid for construction surveying shall include full compensation for furnishing all labor, materials (except survey marker disks), tools, equipment, and incidentals, and for doing all the required survey work involved in constructing the work, including surveying for lines and grades, and for geometric control as specified in the these special provisions, and as directed by the Engineer.

10-1.__ EARTHWORK

Earthwork shall conform to the provisions in Section 19, "Earthwork," of the Standard Specifications and these special provisions.

Attention is directed to "Hazardous Material Excavation," elsewhere in these special provisions regarding hazardous materials.

Surplus excavated material not designated or determined to contain hazardous materialshall become the property of the Contractor and shall be disposed of in conformance with the provisions in Section 7-1.13, "Disposal of Material Outside the Highway Right of Way," of the Standard Specifications.

Reinforcement or metal attached to reinforced concrete rubble placed in embankments shall not protrude above the grading plane. Prior to placement within 0.6-m below the grading plane of embankments, reinforcement or metal shall be trimmed to no greater than 20 mm from the face of reinforced concrete rubble. Full compensation for trimming reinforcement or metal shall be considered as included in the contract prices paid per cubic meter for the types of excavation shown in the Engineer's estimate, or the contract prices paid for furnishing and placing imported borrow or embankment material, as the case may be, and no additional compensation will be allowed therefor.

HAZARDOUS MATERIAL EXCAVATION

Hazardous material excavation shall consist of excavating hazardous materialidentified on the plans as being within excavation limits shown on the plans, specified in the Standard Specifications, or specified or directed by the Engineer and stockpiling and disposing of the material as specified in this section.

Excavated hazardous material shall be managed as follows:

A. Hazardous material – Haul and dispose of the material at a permitted hazardous waste management facility in conformance with Section 2521 of Title 23 of the California Code of Regulations, Section 7-1.13, "Disposal of Material Outside the Highway Right of Way," of the Standard Specifications, and these special provisions.

Hazardous materials shall be transferred directly from the excavation to a registered transport vehicle, a storage container approved for transport of hazardous waste by the United States Department of Transportation, or a stockpile location approved by the Engineer. Stockpile locations for hazardous material shall be maintained as follows:

A. The material shall not contain free liquids that separate readily from the material. The presence or absence of free liquids shall be demonstrated by United States Environmental Protection Agency Method 9095 as modified by Section 66264.314 of Title 22 of the California Code of Regulations.
B. The material shall be stored on undamaged 1.5-mm high-density polyethylene or an equivalent impermeable barrier unless the stockpiling location is on a paved surface. If the location is on a paved surface the thickness of the barrier can be reduced to 0.5-mm high-density polyethylene or its equivalent. The dimensions of the barrier shall exceed the dimensions of the stockpile at all times. Any seams in the barrier shall be sealed to prevent leakage.
C. At the end of each day or prior to a storm event the material shall be covered with undamaged 0.3-mm polyethylene or an equivalent impermeable barrier to prevent windblown dispersion and precipitation run-off and run-on. When more than one sheet is required to cover the material, the sheets shall be overlapped a minimum of 0.45-m in a manner that prevents water from flowing onto the material. The cover shall be secured in a manner that keeps it in place at all times. Driven anchors shall not be used except at the perimeter of the stockpile. The cover shall be inspected and maintained in conformance with the provisions in "Water Pollution Control" of these special provisions.

These stockpiling requirements apply to temporary storage outside of an excavation or a transport container including, but not limited to, staging of excavated material next to the excavation prior to pick up by loading equipment, accumulating material for full transport loads, and awaiting test results required by a disposal facility. The removal of hazardous material stockpiles shall begin within 90 days of accumulating 100 kg of hazardous material. After final removal has occurred the Contractor shall be responsible for any cleanup deemed necessary by the Engineer.

Hazardous material on exteriors of transport vehicles shall be removed and placed either into the current transport vehicle or the excavation prior to the vehicle leaving the loading area. No hazardous material shall be deposited on public roads. The Contractor shall indemnify the State from any costs due to spillage during the transport of the hazardous material to the disposal facility.

Attention is directed to "Hazardous Material, General" of these special provisions.

SAMPLING AND ANALYSIS

The Contractor shall test the material to be excavated for any additional acceptance requirements of the disposal facility. Sampling and analysis shall be performed using the sampling and analysis procedure approved by the Engineer and the disposal facility.

The Contractor may perform additional tests on the material to be excavated for confirmation of the classification as hazardous material. Sampling and analysis shall be based on guidelines in USEPA, SW 846, "Test Methods for Evaluating Solid Waste, Volume II: Field Manual Physical/Chemical Methods." Changes in classification of materials will be handled in accordance with Section 4-1.03, "Changes," of the Standard Specifications.

The Contractor shall submit, for approval by the Engineer, a Sampling and Analysis Plan that describes the scope of the investigation, along with the name, address, and certification number of the testing laboratory, 15 working days prior to beginning any sampling or analysis for additional disposal facility requirements, reclassification of material, characterization of material outside of the excavation pay limits or the horizontal limits of the classification zones shown on the plans. The Sampling and Analysis Plan shall be prepared under the guidance of a registered professional experienced in site characterization. The Engineer will make the final decision on

reclassification or characterization of material after review of the test data. Six working days shall be allowed for review of test data.

Sampling and analysis of material excavated from outside the horizontal limits of the material classification zones shown on the plans will be paid for as extra work as provided in Section 4-1.03D of the Standard Specifications

Operations shall be conducted in a manner that prevents increases in the quantities of hazardous material resulting from mixing with material containing lower contaminant concentrations. No additional compensation will be made for material requiring reclassification due to failure to segregate the material after excavation.

MEASUREMENT AND PAYMENT

Structure excavation (Type AH) will be measured and paid for by the cubic meter in the same manner specified for structure excavation (Type A) in Section 19-3.07 "Measurement," and Section 19-3.08 "Payment," of the Standard Specifications.

Structure excavation designated as (Type DH), for footings at the locations shown on the plans, will be measured and paid for as structure excavation (Type DH). Ground water or surface water is expected to be encountered at these locations, but seal course concrete is not shown or specified. Structure excavation for footings at locations not designated on the plans as structure excavation (Type DH), and where ground or surface water is encountered, except locations where seal course concrete is shown or specified, will be measured and paid for as structure excavation (Type H).

10-1.__ PILING

GENERAL

Piling shall conform to the provisions in Section 49, "Piling," of the Standard Specifications, and these special provisions.

Unless otherwise specified, welding of any work performed in conformance with the provisions in Section 49, "Piling," of the Standard Specifications, shall be in conformance with the requirements in AWS D1.1.

Foundation recommendations are included in the "Information Handout" available to the Contractor as provided for in Section 2-1.03, "Examination of Plans, Specifications, Contract, and Site of Work," of the Standard Specifications.

Attention is directed to "Welding" of these special provisions.

At the option of the Contractor, vibratory hammers or oscillators may be used to install permanent casings. Permanent steel casing shall be placed tight in the borehole. Permanent casing installation methods shall not cause quick soil conditions. Oversized predrilling for casing installation will not be permitted.

Removal of boulders and man made buried objects during permanent steel casing installation will be paid for as extra work as provided in Section 4-1.03D, "Extra Work," of the Standard Specifications.

Difficult pile installation is anticipated due to the presence of highly to moderately weathered, highly to moderately fractured sandstone/siltstone, hazardous and contaminated materials, high ground water, cobbles and boulders, subsurface debris and obstructions, and the requirements of pile embedment into rock.

CAST-IN-DRILLED-HOLE CONCRETE PILES

Cast-in-drilled-hole concrete piling shall conform to the provisions in Section 49-4, "Cast-In-Place Concrete Piles," of the Standard Specifications and these special provisions.

The provisions of "Welding" of these special provisions shall not apply to temporary steel casings.

Cast-in-drilled-hole concrete piles 600 mm in diameter or larger may be constructed by excavation and depositing concrete under slurry.

A pile shall not be drilled immediately adjacent to another pile until the concrete in the other pile has attained its initial set.

Materials

Concrete deposited under slurry shall have a nominal penetration equal to or greater than 90 mm. Concrete shall be proportioned to prevent excessive bleed water and segregation.

Concrete deposited under slurry shall contain not less than 400 kg of cementitious material per cubic meter.

The combined aggregate grading used in concrete for cast-in-drilled-hole concrete piling shall be either the 25-mm maximum grading, the 12.5-mm maximum grading, or the 9.5-mm maximum grading and shall conform to the requirements in Section 90-3 "Aggregate Gradings," of the Standard Specifications.

Mineral Slurry

Mineral slurry shall be mixed and thoroughly hydrated in slurry tanks, and slurry shall be sampled from the slurry tanks and tested before placement in the drilled hole.

Slurry shall be recirculated or continuously agitated in the drilled hole to maintain the specified properties.

Recirculation shall include removal of drill cuttings from the slurry before discharging the slurry back into the drilled hole. When recirculation is used, the slurry shall be sampled and tested at least every 2 hours after beginning its use until tests show that the samples taken from the slurry tank and from near the bottom of the hole have consistent specified properties. Subsequently, slurry shall be sampled at least twice per shift as long as the specified properties remain consistent.

Slurry that is not recirculated in the drilled hole shall be sampled and tested at least every 2 hours after beginning its use. The slurry shall be sampled mid-height and near the bottom of the hole. Slurry shall be recirculated when tests show that the samples taken from mid-height and near the bottom of the hole do not have consistent specified properties.

Slurry shall also be sampled and tested prior to final cleaning of the bottom of the hole and again just prior to placing concrete. Samples shall be taken from mid-height and near the bottom of the hole. Cleaning of the bottom of the hole and placement of the concrete shall not start until tests show that the samples taken from mid-height and near the bottom of the hole have consistent specified properties.

Mineral slurry shall be tested for conformance to the requirements shown in the following table:

MINERAL SLURRY		
PROPERTY	REQUIREMENT	TEST
Density (kg/m^3) - before placement in the drilled hole - during drilling - prior to final cleaning - immediately prior to placing concrete	1030* to 1110* 1030* to 1200*	Mud Weight (Density) API 13B-1 Section 1
Viscosity (seconds/liter) bentonite attapulgite	 29 to 53 29 to 42	Marsh Funnel and Cup API 13B-1 Section 2.2
pH	8 to 10.5	Glass Electrode pH Meter or pH Paper
Sand Content (percent) - prior to final cleaning - immediately prior to placing concrete	 less than or equal to 4.0	Sand API 13B-1 Section 5
*When approved by the Engineer, slurry may be used in salt water, and the allowable densities may be increased up to 32 kg/m^3. Slurry temperature shall be at least 4°C when tested.		

Any caked slurry on the sides or bottom of hole shall be removed before placing reinforcement. If concrete is not placed immediately after placing reinforcement, the reinforcement shall be removed and cleaned of slurry, the sides of the drilled hole cleaned of caked slurry, and the reinforcement again placed in the hole for concrete placement.

Synthetic Slurry

Synthetic slurries shall be used in conformance with the manufacturer's recommendations and these special provisions. The following synthetic slurries may be used:

PRODUCT	MANUFACTURER
SlurryPro CDP	KB Technologies Ltd. 3648 FM 1960 West Suite 107 Houston, TX 77068 (800) 525-5237
Super Mud	PDS Company c/o Champion Equipment Company 8140 East Rosecrans Ave. Paramount, CA 90723 (562) 634-8180
Shore Pac GCV	CETCO Drilling Products Group 1350 West Shure Drive Arlington Heights, IL 60004 (847) 392-5800
Novagel Polymer	Geo-Tech Drilling Fluids 220 N. Zapata Hwy, Suite 11A Laredo, TX 78043 (210) 587-4758

Inclusion of a synthetic slurry on the above list may be obtained by meeting the Department's requirements for synthetic slurries. The requirements can be obtained from the Office of Structure Design, P.O. Box 942874, Sacramento, CA 94274-0001.

Synthetic slurries listed may not be appropriate for a given site.

Synthetic slurries shall not be used in holes drilled in primarily soft or very soft cohesive soils as determined by the Engineer.

A manufacturer's representative, as approved by the Engineer, shall provide technical assistance for the use of their product, shall be at the site prior to introduction of the synthetic slurry into a drilled hole, and shall remain at the site until released by the Engineer.

Synthetic slurries shall be sampled and tested at both mid-height and near the bottom of the drilled hole. Samples shall be taken and tested during drilling as necessary to verify the control of the properties of the slurry. Samples shall be taken and tested when drilling is complete, but prior to final cleaning of the bottom of the hole. When samples are in conformance with the requirements shown in the following tables for each slurry product, the bottom of the hole shall be cleaned and any loose or settled material removed. Samples shall be obtained and tested after final cleaning and immediately prior to placing concrete.

SlurryPro CDP synthetic slurries shall be tested for conformance to the requirements shown in the following table:

SLURRYPRO CDP KB Technologies Ltd.		
PROPERTY	REQUIREMENT	TEST
Density (kg/m^3) - during drilling - prior to final cleaning - just prior to placing concrete	less than or equal to 1075* less than or equal to 1025*	Mud Weight (Density) API 13B-1 Section 1
Viscosity (seconds/liter) - during drilling -prior to final cleaning - just prior to placing concrete	53 to 127 less than or equal to 74	Marsh Funnel and Cup API 13B-1 Section 2.2
pH	6 to 11.5	Glass Electrode pH Meter or pH Paper
Sand Content (percent) - prior to final cleaning - just prior to placing concrete	less than or equal to 0.5	Sand API 13B-1 Section 5
*When approved by the Engineer, slurry may be used in salt water, and the allowable densities may be increased up to 32 kg/m^3. Slurry temperature shall be at least 4°C when tested.		

Super Mud synthetic slurries shall be tested for conformance to the requirements shown in the following table:

SUPER MUD PDS Company		
PROPERTY	REQUIREMENT	TEST
Density (kg/m^3) - prior to final cleaning - just prior to placing concrete	less than or equal to 1025*	Mud Weight (Density) API 13B-1 Section 1
Viscosity (seconds/liter) - during drilling - prior to final cleaning - just prior to placing concrete	34 to 64 less than or equal to 64	Marsh Funnel and Cup API 13B-1 Section 2.2
pH	8 to 10.0	Glass Electrode pH Meter or pH Paper
Sand Content (percent) - prior to final cleaning -just prior to placing concrete	less than or equal to 0.5	Sand API 13B-1 Section 5
*When approved by the Engineer, slurry may be used in salt water, and the allowable densities may be increased up to 32 kg/m^3. Slurry temperature shall be at least 4°C when tested.		

Shore Pac GCV synthetic slurries shall be tested for conformance to the requirements shown in the following table:

Shore Pac GCV CETCO Drilling Products Group		
PROPERTY	REQUIREMENT	TEST
Density (kg/m^3) - prior to final cleaning - just prior to placing concrete	less than or equal to 1025*	Mud Weight (Density) API 13B-1 Section 1
Viscosity (seconds/liter) - during drilling - prior to final cleaning - just prior to placing concrete	35 to 78 less than or equal to 60	Marsh Funnel and Cup API 13B-1 Section 2.2
pH	8.0 to 11.0	Glass Electrode pH Meter or pH Paper
Sand Content (percent) - prior to final cleaning -just prior to placing concrete	less than or equal to 0.5	Sand API 13B-1 Section 5
*When approved by the Engineer, slurry may be used in salt water, and the allowable densities may be increased up to 32 kg/m^3. Slurry temperature shall be at least 4°C when tested.		

Novagel Polymer synthetic slurries shall be tested for conformance to the requirements shown in the following table:

NOVAGEL POLYMER Geo-Tech Drilling Fluids		
PROPERTY	REQUIREMENT	TEST
Density (kg/m^3) - during drilling - prior to final cleaning - just prior to placing concrete	less than or equal to 1075* less than or equal to 1025*	Mud Weight (Density) API 13B-1 Section 1
Viscosity (seconds/liter) - during drilling - prior to final cleaning - just prior to placing concrete	48 to 110 less than or equal to 110	Marsh Funnel and Cup API 13B-1 Section 2.2
pH	6.0 to 11.5	Glass Electrode pH Meter or pH Paper
Sand Content (percent) - prior to final cleaning -just prior to placing concrete	less than or equal to 0.5	Sand API 13B-1 Section 5
*When approved by the Engineer, slurry may be used in salt water, and the allowable densities may be increased up to 32 kg/m^3. Slurry temperature shall be at least 4°C when tested.		

Water Slurry

At the option of the Contractor, water may be used as slurry when casing is used for the entire length of the drilled hole.

Water slurry shall be tested for conformance to the requirements shown in the following table:

WATER SLURRY		
PROPERTY	REQUIREMENT	TEST
Density (kg/m^3) - prior to final cleaning - just prior to placing concrete	1017 *	Mud Weight (Density) API 13B-1 Section 1
Sand Content (percent) - prior to final cleaning -just prior to placing concrete	less than or equal to 0.5	Sand API 13B-1 Section 5
*When approved by the Engineer, salt water slurry may be used, and the allowable densities may be increased up to 32 kg/m^3.		

Construction

The Contractor shall submit a placing plan to the Engineer for approval prior to producing the test batch for cast-in-drilled-hole concrete piling and at least 10 working days prior to constructing piling. The plan shall include complete descriptions, details, and supporting calculations as listed below:

A. Requirements for all cast-in-drilled hole concrete piling:

1. Concrete mix design, certified test data, and trial batch reports.
2. Drilling or coring methods and equipment.
3. Proposed method for casing installation and removal when necessary.
4. Plan view drawing of pile showing reinforcement and inspection pipes, if required.
5. Methods for placing, positioning, and supporting bar reinforcement.
6. Methods and equipment for accurately determining the depth of concrete and actual and theoretical volume placed, including effects on volume of concrete when any casings are withdrawn.
7. Methods and equipment for verifying that the bottom of the drilled hole is clean prior to placing concrete.
8. Methods and equipment for preventing upward movement of reinforcement, including the Contractor's means of detecting and measuring upward movement during concrete placement operations.

B. Additional requirements when concrete is placed under slurry:

1. Concrete batching, delivery, and placing systems, including time schedules and capacities therefor. Time schedules shall include the time required for each concrete placing operation at each pile.

2. Concrete placing rate calculations. When requested by the Engineer, calculations shall be based on the initial pump pressures or static head on the concrete and losses throughout the placing system, including anticipated head of slurry and concrete to be displaced.
3. Suppliers' test reports on the physical and chemical properties of the slurry and any proposed slurry chemical additives, including Material Safety Data Sheet.
4. Slurry testing equipment and procedures.
5. Methods of removal and disposal of excavation, slurry, and contaminated concrete, including removal rates.
6. Methods and equipment for slurry agitating, recirculating, and cleaning.

In addition to compressive strength requirements, the consistency of the concrete to be deposited under slurry shall be verified before use by producing a test batch. The test batch shall be produced and delivered to the project under conditions and in time periods similar to those expected during the placement of concrete in the piles. Concrete for the test batch shall be placed in an excavated hole or suitable container of adequate size to allow for testing as specified herein. Depositing of test batch concrete under slurry will not be required. In addition to meeting the specified nominal penetration, the test batch shall meet the following requirements:

A. For piles where the time required for each concrete placing operation, as submitted in the placing plan, will be 2 hours or less, the test batch shall demonstrate that the proposed concrete mix design achieves either a penetration of at least 50 mm or a slump of at least 125 mm after twice that time has elapsed.
B. For piles where the time required for each concrete placing operation, as submitted in the placing plan, will be more than 2 hours, the test batch shall demonstrate that the proposed concrete mix design achieves either a penetration of at least 50 mm or a slump of at least 125 mm after that time plus 2 hours has elapsed.

The time period shall begin at the start of placement. The concrete shall not be vibrated or agitated during the test period. Penetration tests shall be performed in conformance with the requirements in California Test 533. Slump tests shall be performed in conformance with the requirements in ASTM Designation: C 143. Upon completion of testing, the concrete shall be disposed of in conformance with the provisions in Section 7-1.13, "Disposal of Material Outside the Highway Right of Way," of the Standard Specifications.

The concrete deposited under slurry shall be carefully placed in a compact, monolithic mass and by a method that will prevent washing of the concrete. Concrete deposited under slurry need not be vibrated. Placing concrete shall be a continuous operation lasting not more than the time required for each concrete placing operation at each pile, as submitted in the placing plan, unless otherwise approved in writing by the Engineer. The concrete shall be placed with concrete pumps and delivery tube system of adequate number and size to complete the placing of concrete in the time specified. The delivery tube system shall consist of one of the following:

A. A tremie tube or tubes, each of which are at least 250 mm in diameter, fed by one or more concrete pumps.
B. One or more concrete pump tubes, each fed by a single concrete pump.

The delivery tube system shall consist of watertight tubes with sufficient rigidity to keep the ends always in the mass of concrete placed. If only one delivery tube is utilized to place the concrete, the tube shall be placed near the center of the drilled hole. Multiple tubes shall be

uniformly spaced in the hole. Internal bracing for the steel reinforcing cage shall accommodate the delivery tube system. Tremies shall not be used for piles without space for a 250-mm tube.

Spillage of concrete into the slurry during concrete placing operations shall not be allowed. Delivery tubes shall be capped with a watertight cap, or plugged above the slurry level with a good quality, tight fitting, moving plug that will expel the slurry from the tube as the tube is charged with concrete. The cap or plug shall be designed to be released as the tube is charged. The pump discharge or tremie tube shall extend to the bottom of the hole before charging the tube with concrete. After charging the delivery tube system with concrete, the flow of concrete through a tube shall be induced by slightly raising the discharge end. During concrete placement, the tip of the delivery tube shall be maintained as follows to prevent reentry of the slurry into the tube. Until at least 3 m of concrete has been placed, the tip of the delivery tube shall be within 150 mm of the bottom of the drilled hole, and then the embedment of the tip shall be maintained at least 3 m below the top surface of the concrete. Rapid raising or lowering of the delivery tube shall not be permitted. If the seal is lost or the delivery tube becomes plugged and must be removed, the tube shall be withdrawn, the tube cleaned, the tip of the tube capped to prevent entrance of the slurry, and the operation restarted by pushing the capped tube 3 m into the concrete and then reinitiating the flow of concrete.

When slurry is used, a fully operational standby concrete pump, adequate to complete the work in the time specified, shall be provided at the site during concrete placement. The slurry level shall be maintained within 300 mm of the top of the drilled hole.

A log of concrete placement for each drilled hole shall be maintained by the Contractor when concrete is deposited under slurry. The log shall show the pile location, tip elevation, dates of excavation and concrete placement, total quantity of concrete deposited, length and tip elevation of any casing, and details of any hole stabilization method and materials used. The log shall include a 215 mm x 280 mm sized graph of the concrete placed versus depth of hole filled. The graph shall be plotted continuously throughout placing of concrete. The depth of drilled hole filled shall be plotted vertically with the pile tip oriented at the bottom and the quantity of concrete shall be plotted horizontally. Readings shall be made at least at each 1.5 m of pile depth, and the time of the reading shall be indicated. The graph shall be labeled with the pile location, tip elevation, cutoff elevation, and the dates of excavation and concrete placement. The log shall be delivered to the Engineer within one working day of completion of placing concrete in the pile.

After placing reinforcement and prior to placing concrete in the drilled hole, if drill cuttings settle out of the slurry, the bottom of the drilled hole shall be cleaned. The Contractor shall verify that the bottom of the drilled hole is clean.

If temporary casing is used, concrete placed under slurry shall be maintained at a level at least 1.5 m above the bottom of the casing. The withdrawal of casings shall not cause contamination of the concrete with slurry.

Material resulting from using slurry shall be disposed of in conformance with the provisions in Section 7-1.13, "Disposal of Material Outside the Highway Right of Way," of the Standard Specifications.

Permanent steel casings shall be furnished and placed tight in the hole where shown on the plans. The provisions of Section 49-1.08, "Pile Driving Acceptance Criteria," of the Standard Specifications shall not apply to permanent steel casings. Permanent casings shall be watertight and of sufficient strength to withstand the loads from installation procedures, lateral concrete pressures, and earth pressures, and shall conform to the provisions of "Steel Pipe Piling" of these special provisions.

If conditions render it impossible or inadvisable in the opinion of the Engineer to dewater the permanent steel casing prior to drilling below it, the bottom of the casing shall be sealed in

conformance with the provisions in Section 51-1.10, "Concrete Deposited Under Water," of the Standard Specifications. The sealed casing shall then be dewatered and cleaned out as specified herein.

Acceptance Testing and Mitigation

Vertical inspection pipes for acceptance testing shall be provided in all cast-in-drilled-hole concrete piles that are 600 mm in diameter or larger, except when the holes are dry or when the holes are dewatered without the use of temporary casing to control ground water.

Inspection pipes shall be Schedule 40 polyvinyl chloride pipes with a nominal inside diameter of 50 mm. Each inspection pipe shall be capped top and bottom and shall have watertight couplers to provide a clean, dry and unobstructed 50-mm diameter clear opening from 1.0 m above the pile cutoff down to the bottom of the reinforcing cage.

Inspection pipes shall be placed around the pile, inside the outermost spiral or hoop reinforcement, and 75 mm clear of the vertical reinforcement, at a uniform spacing not exceeding 840 mm measured along the circle passing through the centers of inspection pipes. A minimum of 2 inspection pipes per pile shall be used. When the vertical reinforcement is not bundled and each bar is not more than 26 mm in diameter, inspection pipes may be placed 50 mm clear of the vertical reinforcement. The inspection pipes shall be placed to provide the maximum diameter circle that passes through the centers of the inspection pipes while maintaining the clear spacing required herein. The pipes shall be installed in straight alignment, parallel to the main reinforcement, and securely fastened in place to prevent misalignment during installation of the reinforcement and placing of concrete in the hole.

The Contractor shall log the location of the inspection pipe couplers with respect to the plane of pile cut off, and these logs shall be delivered to the Engineer upon completion of the placement of concrete in the drilled hole.

After placing concrete and before requesting acceptance tests, each inspection pipe shall be tested by the Contractor in the presence of the Engineer by passing a 48.3-mm diameter rigid cylinder 610 mm long through the complete length of pipe. If the 48.3-mm diameter rigid cylinder fails to pass any of the inspection pipes, the Contractor shall attempt to pass a 32.0-mm diameter rigid cylinder 1.375 m long through the complete length of those pipes in the presence of the Engineer. If an inspection pipe fails to pass the 32.0-mm diameter cylinder, the Contractor shall immediately fill all inspection pipes in the pile with water.

The Contractor shall replace each inspection pipe that does not pass the 32.0-mm diameter cylinder with a 50.8-mm diameter hole cored through the concrete for the entire length of the pile. Cored holes shall be located as close as possible to the inspection pipes they are replacing and shall be no more than 150 mm inside the reinforcement. Coring shall not damage the pile reinforcement. Cored holes shall be made with a double wall core barrel system utilizing a split tube type inner barrel. Coring with a solid type inner barrel will not be allowed. Coring methods and equipment shall provide intact cores for the entire length of the pile concrete. The coring operation shall be logged by an Engineering Geologist or Civil Engineer licensed in the State of California and experienced in core logging. Coring logs shall include complete descriptions of inclusions and voids encountered during coring, and shall be delivered to the Engineer upon completion. Concrete cores shall be preserved, identified with the exact location the core was recovered from within the pile, and made available for inspection by the Engineer.

Acceptance tests of the concrete will be made by the Engineer, without cost to the Contractor. Acceptance tests will evaluate the homogeneity of the placed concrete. Tests will include gamma-gamma logging. Tests may also include crosshole sonic logging and other means of inspection selected by the Engineer. The Contractor shall not conduct operations within 8.0 m of the gamma-gamma logging operations. The Contractor shall separate

reinforcing steel as necessary to allow the Engineer access to the inspection pipes to perform gamma-gamma logging or other acceptance testing. After requesting acceptance tests and providing access to the piling, the Contractor shall allow 3 weeks for the Engineer to conduct these tests and make determination of acceptance if the 48.3-mm diameter cylinder passed all inspection pipes, and 4 weeks if only the 32.0-mm diameter cylinder passed all inspection pipes. Should the Engineer fail to complete these tests within the time allowance, and if in the opinion of the Engineer, the Contractor's controlling operation is delayed or interfered with by reason of the delay in inspection, the delay will be considered a right of way delay as specified in Section 8-1.09, "Right of Way Delays," of the Standard Specifications.

All inspection pipes and cored holes in a pile shall be dewatered and filled with grout after notification by the Engineer that the pile is acceptable. Placement and removal of water in the inspection pipes shall be at the Contractor's expense. Grout shall conform to the provisions in Section 50-1.09, "Bonding and Grouting," of the Standard Specifications. The inspection pipes and holes shall be filled using grout tubes that extend to the bottom of the pipe or hole or into the grout already placed.

If acceptance testing performed by the Engineer determines that a pile does not meet the requirements of the specifications, then that pile will be rejected and all depositing of concrete under slurry or concrete placed using temporary casing for the purpose of controlling groundwater shall be suspended until written changes to the methods of pile construction are approved in writing by the Engineer.

The Contractor shall submit to the Engineer for approval a mitigation plan for repair, supplementation, or replacement for each rejected cast-in-drilled-hole concrete pile, and this plan shall conform to the provisions in Section 5-1.02, "Plans and Working Drawings," of the Standard Specifications. Prior to submitting this mitigation plan, the Engineer will hold a repair feasibility meeting with the Contractor to discuss the feasibility of repairing rejected piling. The Engineer will consider the size of the defect, the location of the defect, and the design information and corrosion protection considerations for the pile. This information will be made available to the Contractor, if appropriate, for the development of the mitigation plan. If the Engineer determines that it is not feasible to repair the rejected pile, the Contractor shall not include repair as a means of mitigation and shall proceed with the submittal of a mitigation plan for replacement or supplementation of the rejected pile.

If the Engineer determines that a rejected pile does not require mitigation due to structural, geotechnical, or corrosion concerns, the Contractor may elect to 1) repair the pile per the approved mitigation plan, or 2) not repair anomalies found during acceptance testing of that pile. For such unrepaired piles, the Contractor shall pay to the State, $400 per cubic meter for the portion of the pile affected by the anomalies. The volume, in cubic meters, of the portion of the pile affected by the anomalies, shall be calculated as the area of the cross-section of the pile affected by each anomaly, in square meters, as determined by the Engineer, multiplied by the distance, in meters, from the top of each anomaly to the specified tip of the pile. If the volume calculated for one anomaly overlaps the volume calculated for additional anomalies within the pile, the calculated volume for the overlap shall only be counted once. In no case shall the amount of the payment to the State for any such pile be less than $400. The Department may deduct the amount from any moneys due, or that may become due the Contractor under the contract.

Pile mitigation plans shall include the following:

A. The designation and location of the pile addressed by the mitigation plan.
B. A review of the structural, geotechnical, and corrosion design requirements of the rejected pile.

C. A step by step description of the mitigation work to be performed, including drawings if necessary.
D. An assessment of how the proposed mitigation work will address the structural, geotechnical, and corrosion design requirements of the rejected pile.
E. Methods for preservation or restoration of existing earthen materials.
F. A list of affected facilities, if any, with methods and equipment for protection of these facilities during mitigation.
G. The State assigned contract number, bridge number, full name of the structure as shown on the contract plans, District-County-Route-Kilometer Post, and the Contractor's (and Subcontractor's if applicable) name on each sheet.
H. A list of materials, with quantity estimates, and personnel, with qualifications, to be used to perform the mitigation work.
I. The seal and signature of an engineer who is licensed as a Civil Engineer by the State of California.

For rejected piles to be repaired, the Contractor shall submit a pile mitigation plan that contains the following additional information:

A. An assessment of the nature and size of the anomalies in the rejected pile.
B. Provisions for access for additional pile testing if required by the Engineer.

For rejected piles to be replaced or supplemented, the Contractor shall submit a pile mitigation plan that contains the following additional information:

A. The proposed location and size of additional piling.
B. Structural details and calculations for any modification to the structure to accommodate the replacement or supplemental piling.

All provisions for cast-in-drilled-hole concrete piling shall apply to replacement piling.

The Contractor shall allow the Engineer 3 weeks to review the mitigation plan after a complete submittal has been received.

Should the Engineer fail to review the complete pile mitigation submittal within the time specified, and if, in the opinion of the Engineer, the Contractor's controlling operation is delayed or interfered with by reason of the delay in reviewing the pile mitigation plan, an extension of time commensurate with the delay in completion of the work thus caused will be granted in conformance with the provisions in Section 8-1.09, "Right of Way Delays," of the Standard Specifications.

When repairs are performed, the Contractor shall submit a mitigation report to the Engineer within 10 days of completion of the repair. This report shall state exactly what repair work was performed and quantify the success of the repairs relative to the submitted mitigation plan. The mitigation report shall be stamped and signed by an engineer that is licensed as a Civil Engineer by the State of California. The mitigation report shall show the State assigned contract number, bridge number, full name of the structure as shown on the contract plans, District-County-Route-Kilometer Post, and the Contractor (and Subcontractor if applicable) name on each sheet. The Engineer will be the sole judge as to whether a mitigation proposal is acceptable, the mitigation efforts are successful, and to whether additional repairs, removal and replacement, or construction of a supplemental foundation is required.

STEEL PIPE PILING

General

Steel pipe piling shall consist of permanent steel casing for cast-in-drilled-hole concrete piling. Steel pipe piling shall conform to the provisions in Section 49-5, "Steel Piles," of the Standard Specifications and these special provisions.

Except for field welding, as defined herein, the provisions of "Welding Quality Control" of these special provisions shall not apply to steel pipe piling.

Wherever reference is made to the American Petroleum Institute (API) specification 5L in the Standard Specifications, on the project plans, or in these special provisions, the year of adoption shall be 2000. All requirements of that code shall apply unless specified otherwise in the Standard Specifications, on the plans, or in these special provisions.

Only longitudinal and spiral seam welds in steel pipe piles may be made by the electric resistance welding method. Those welds shall be welded in conformance with the requirements in API 5L and any amendments to API 5L in the Standard Specifications or these special provisions.

Steel Pipe piling shall either conform to the requirements in API 5L or AWS D1.1, and the provisions specified in Section 49-5, "Steel Piles," of the Standard Specifications and these special provisions.

Handling devices may be attached to steel pipe piling. Welds attaching these devices shall be aligned parallel to the axis of the pile and shall conform to the requirements for field welding specified herein. Permanent bolted connections shall be corrosion resistant. Prior to making attachments, the Contractor shall submit a plan to the Engineer that includes the locations, handling and fitting device details, and connection details. Attachments shall not be made to the steel pipe piling until the plan is approved in writing by the Engineer. The Contractor shall allow the Engineer 7 days for the review of the plan. In the event the Engineer fails to complete the review within the time allowed, and if, in the opinion of the Engineer, completion of the work is delayed or interfered with by reason of the Engineer's delay in completing the review, the Contractor will be compensated for any resulting loss, and an extension of time will be granted, in the same manner as provided for in Section 8-1.09, "Right of Way Delays," of the Standard Specifications.

Steel Pipe in Conformance with API 5L

Steel pipe piling conforming to the requirements in API 5L shall conform to the following additional requirements:

A. Each length of steel pipe piling shall be marked with the API monogram.
B. The product shall be capable of meeting the fit-up requirements of AWS D1.1, Section 5.22.3.1, "Girth Weld Alignment (Tubular)," when the project requires the material to be spliced utilizing a girth weld.
C. Welds made at a permanent facility shall be made by submerged arc welding or an electric resistance welding process.
D. Except for tack welding, the gas metal arc welding process (GMAW) shall not be used for welding of pipe pile material. When GMAW is used for tacking, the electrode shall not be deposited by short circuiting transfer.
E. The joining of pipe sections in a permanent facility utilizing a circumferential or jointer weld shall conform to the requirements in AWS D1.1.

Steel Pipe in Conformance with AWS D1.1

Steel pipe piling conforming to the requirements in AWS D1.1 shall conform to the following additional requirements:

A. Weld filler metal shall conform to the requirements in AWS D1.5 for the welding of ASTM Designation: A709/A709M, Grade 345 steel, except that the qualification, pretest, and verification test requirements need not be conducted if certified test reports are provided for the consumables to be used.
B. Except for tack welding, GMAW shall not be used for welding of pipe pile material. When GMAW is used for tacking, the electrode shall not be deposited by short circuiting transfer.
C. Pipe piling designated as ASTM Designation A252, which has a yield strength of less than or equal to 450 MPa, shall be treated as ASTM Designation A572/A572M, Grade 345 material for the purpose of welding and pre-qualification of base metal, in conformance with the requirements in AWS D1.1.
D. Each length of steel pipe piling shall be marked in conformance with the requirements in ASTM Designation: A252.
E. The outside circumference of the steel pipe piling end shall not vary by more than 10 mm from that corresponding to the diameter shown on the plans.

Field Welding

Field welding of steel piling is defined as welding performed after the certificate of compliance has been furnished by the manufacturer or fabricator and shall conform to the following requirements:

A. Match marking of pipe ends at the manufacturing or fabrication facility is recommended for piling to ensure weld joint fit-up. Prior to positioning any 2 sections of steel pipe to be spliced by field welding, including those that have been match marked at the manufacturing or fabrication facility, the Contractor shall equalize the offsets of the pipe ends to be joined and match mark the pipe ends.
B. Welds made in the flat position or vertical position (where the longitudinal pipe axis is horizontal) shall be single-vee or double-vee groove welds. Welds made in the horizontal position (where the longitudinal pipe axis is vertical) shall be single-bevel groove welds. Joint fit-ups shall conform to the requirements in AWS D1.1, Section 5.22.3.1, "Girth Weld Alignment (Tubular)," and these special provisions.
C. The minimum thickness of the backing ring shall be 6 mm, and the ring shall be continuous. Splices in the backing ring shall be made by complete penetration welds. These welds shall be completed, including visual inspection and any required nondestructive testing (NDT), prior to final insertion into a pipe end. The attachment of backing rings to pipe ends shall be done using the minimum size and spacing of tack welds that will securely hold the backing ring in place. Tack welding shall be done in the root area of the weld splice. Cracked tack welds shall be removed and replaced prior to subsequent weld passes. The gap between the backing ring and the steel pipe piling wall shall be no greater than 2 mm. One localized portion of the backing ring fit-up, that is equal to or less than a length that is 20 percent of the outside circumference of the pipe, as determined by the Engineer, may be offset by a gap equal to or less than 6 mm provided that this localized portion is first seal welded using shielded metal arc E7016 or E7018 electrodes. The Contractor shall mark this localized portion so that it can be referenced during any required NDT. Backing rings shall have a minimum width of

1 1/2 times the thickness of the pile to be welded or 65 mm, whichever is greater, so that the backing ring will not interfere with the interpretation of the NDT.

D. For steel pipe with an outside diameter greater than 1.1 m, and with a wall thickness greater than 25.4 mm, the root opening tolerances may be increased to a maximum of 5 mm over the specified tolerances.

E. Weld filler metal shall conform to the requirements shown in AWS D1.5 for the welding of ASTM Designation: A709/A709M, Grade 345 steel, except that the qualification, pretest, and verification test requirements need not be conducted if certified test reports are provided for the consumables to be used.

F. For field welding limited to attaching backing rings and handling devices, the preheat and interpass temperature shall be in conformance with the requirements in AWS D1.1, Section 3.5, "Minimum Preheat and Interpass Temperature Requirements," and with Table 3.2, Category C.

G. The minimum preheat and interpass temperature for production splice welding and for making repairs shall be 66°C, regardless of the pipe pile wall thickness or steel grade. In the event welding is disrupted, preheating to 66°C must occur before welding is resumed.

H. Welds shall not be water quenched. Welds shall be allowed to cool unassisted to ambient temperature.

I. Pipe piling designated as ASTM Designation A252, which has a yield strength of less than or equal to 450 MPa, shall be treated as ASTM Designation A572/A572M, Grade 345 material for the purposes of welding and prequalification of base metal, in conformance with the requirements in AWS D1.1.

MEASUREMENT AND PAYMENT (PILING)

Measurement and payment for the various types and classes of piles shall conform to the provisions in Sections 49-6.01, "Measurement," and 49-6.02, "Payment," of the Standard Specifications and these special provisions.

Payment for cast-in-place concrete piling shall conform to the provisions in Section 49-6.02, "Payment," of the Standard Specifications and these special provisions except that, when the diameter of cast-in-place concrete piling is shown on the plans as 600 mm or larger, reinforcement in the piling will be paid for by the kilogram as bar reinforcing steel (bridge).

Full compensation for slurry, depositing concrete under slurry, test batches, inspection pipes, filling inspection holes and pipes with grout, filling cave-ins with concrete, filling oversize permanent steel casings with concrete, and redrilling through concrete, shall be considered as included in the contract prices paid per meter for cast-in-drilled-hole concrete piling of the types and sizes listed in the Engineer's Estimate, and no additional compensation will be allowed therefor.

The contract price paid per meter for permanent steel casing of the sizes listed in the Engineer's Estimate shall include full compensation for furnishing all labor, materials, tools, equipment, and incidentals, and for doing all the work involved in furnishing and installing permanent steel casing, complete in place, as shown on the plans, as specified in the Standard Specifications and these special provisions, and as directed by the Engineer.

Full compensation for conforming to the provisions in "Steel Pipe Piling" of these special provisions shall be considered as included in the contract prices paid for the various items of work involved, and no additional compensation will be allowed therefor.

10-1.__ CONCRETE STRUCTURES

Portland cement concrete structures shall conform to the provisions in Section 51, "Concrete Structures," of the Standard Specifications and these special provisions.

GENERAL

Attention is directed to "Miscellaneous Metal (Bridge)," of these special provisions regarding anchor rods, plates and other hardware to be embedded into concrete.

Placement of embedded items shall conform to the requirements in the AISC Steel Construction Manual (13th Edition) Section 7.5, "Installation of Anchor Rods, Foundation Bolts, and Other Embedded Items," and the following:

A. The variation in dimension between the centers of any two anchor rods within an anchor rod group shall be equal to or less than 3 mm (1/8 inch).
B. The variation in dimension between the centers of adjacent anchor rod groups shall be equal to or less than 6 mm (1/4 inch).
C. The variation in elevation of the tops of anchor rods shall be equal to or less than plus or minus 13 mm (1/2 inch).
D. The accumulated variation in dimension between centers of anchor rod groups along the column line through multiple anchor rod groups shall be equal to or less than 2 mm per 10,000 mm (1/4 inch per 100 ft), but not to exceed a total of 25 mm (1 inch).
E. The variation in dimension from the center of any Anchor-Rod Group to the Column Line through that group shall be equal to or less than 6 mm (1/4 inch).

Anchor rods shall be plumb.

The Contractor shall use appropriate templates to meet and maintain the required tolerances for the following:

A. Within each group of anchor rods
B. Between the centers of adjacent anchor rod groups within a tower

The Contractor shall submit 5 sets of working drawings for anchor bolt placement in conformance with the provisions in Section 5-1.02, "Plans and Working Drawings," of the Standard Specifications. Working drawings shall include:

A. Details of bolt templates
B. Details and descriptions of methods to meet and maintain the required tolerances including instrumentation and documentation

The Contractor shall allow the Engineer 10 working days to review the anchor bolt working drawings.

Shotcrete shall not be used as an alternative construction method for reinforced concrete members unless otherwise specified.

ELASTOMERIC BEARING PADS

Elastomeric bearing pads shall conform to the provisions in Section 51-1.12H, "Elastomeric Bearing Pads," of the Standard Specifications and these special provisions.

Elastomeric bearing pads shall be bonded to steel with adhesive conforming to Federal Specification MMM-A-121, where shown on the plans.

MEASUREMENT AND PAYMENT

Measurement and payment for concrete in structures shall conform to the provisions in Section 51-1.22, "Measurement," and Section 51-1.23, "Payment," of the Standard Specifications and these special provisions.

Full compensation for bonding elastomeric bearing pads to steel plates shall be considered as included in the contract price paid per cubic meter for structural concrete, bridge and no additional compensation will be allowed therefor.

Full compensation for meeting and maintaining the required tolerances for embedded items shall be considered as included in the contract price paid per cubic meter for structural concrete (bridge) and no additional compensation will be allowed therefor.

10-1.__ REINFORCEMENT

Reinforcement shall conform to the provisions in Section 52, "Reinforcement," of the Standard Specifications and these special provisions.

The Department's mechanical splices prequalified list can be found at the following internet site:

http://www.dot.ca.gov/hq/esc/approved_products_list/

The provisions of "Welding Quality Control" of these special provisions shall not apply to resistance butt welding.

10-1.__ HEADED BAR REINFORCEMENT

Headed bar reinforcement shall consist of bar reinforcement with heads attached to one or both ends. The type of headed bar reinforcement to be used on this project shall be on the Department's current prequalified list prior to use, and shall conform to the provisions of Section 52, "Reinforcement," of the Standard Specifications, the details shown on the plans, and these special provisions.

The Department maintains a list of prequalified headed bar reinforcement types. The prequalified list can be obtained by contacting the Transportation Laboratory and is available at the Department's internet site at:

http://www.dot.ca.gov/hq/esc/approved_products_list/

GENERAL

Prior to manufacturing, the Contractor shall submit to the Engineer the manufacturer's Quality Control (QC) manual for the fabrication of headed bar reinforcement. As a minimum, the QC manual shall include the following:

A. The pre-production procedures for the qualification of materials and equipment.
B. The methods and frequencies for performing QC procedures during production.
C. The calibration procedures and calibration frequency for all equipment.
D. A system for the identification and tracking of all friction welds. The system shall have provisions for permanently identifying each weld and the parameters used to perform it.
E. The welding procedure specification (WPS) for friction welded headed bar reinforcement.
F. A system for marking headed bar reinforcement.

The provisions of "Welding Quality Control" of these special provisions shall not apply to headed bar reinforcement.

The Contractor shall perform inspection and testing prior to, during, and after manufacturing headed bar reinforcement and as necessary to ensure that materials and workmanship conform to the requirements of the specifications.

A daily production log for the manufacture of headed bar reinforcement shall be maintained by the manufacturer for each production lot. The log shall clearly indicate the production lot numbers, the heats of bar material and head material used in the manufacture of each production lot, the number of bars in each production lot, and manufacturing records, including tracking and production parameters for welds or forgings. The data from the daily production log shall be available to the Engineer upon request.

A production lot of headed bar reinforcement is defined as 150 reinforcing bars, or fraction thereof, of the same bar size, with heads of the same size and type, and manufactured by the same method, produced from bar material of a single heat number and head material of a single heat number. If one reinforcing bar has a head on both ends, it will be counted as two reinforcing bars for the purposes of establishing and testing production lots. A new production lot shall be started if the heat number of either the bar material or the head material changes before the maximum production lot size of 150 is reached.

The Contractor shall furnish Certificates of Compliance accompanied by a copy of the mill test report, the Production Tests Reports specified herein, and the corresponding daily production logs to the Engineer in conformance with the provisions in Section 6-1.07, "Certificates of Compliance," of the Standard Specifications for each shipment of headed bar reinforcement delivered to the jobsite.

Welding, welder qualifications, and inspection of welding shall conform to the requirements for friction welding in ANSI/AWS C6.1.

Equipment used to perform friction welding shall be fitted with an effective in-process monitoring system to record essential production parameters that describe the process of welding the head onto the reinforcement. The parameters to be recorded shall include friction welding force, forge force, rotational speed, friction upset distance and time, and forge upset distance and time. The data from this in-process monitoring shall be recorded and preserved by the manufacturer until acceptance of the contract and shall be provided to the Engineer upon request.

PRODUCTION TESTS

Production tests shall be performed at the Contractor's expense, at an independent qualified testing laboratory, and in the presence of the Engineer, unless otherwise directed in writing. The independent qualified testing laboratory used to perform the testing of headed bar reinforcement samples shall not be employed or compensated by any subcontractor, or by other persons or entities hired by subcontractors who will provide other services or materials for the project, and shall have the following:

A. A tensile testing machine capable of breaking the largest size of reinforcing bar to be tested.
B. Operators who have received formal training for performing the testing requirements of ASTM Designation: A 970/A 970M.
C. A record of annual calibration of testing equipment performed by an independent third party that has 1) standards that are traceable to the National Institute of Standards and Technology, and 2) a formal reporting procedure, including published test forms.

The Engineer shall be notified in writing when any lots of headed bar reinforcement are

ready for testing. The notification shall include the number of lots to be tested and the location where the tests are to be conducted. After notification has been received, test samples will be randomly selected by the Engineer from each production lot of headed bar reinforcement which is ready for shipment to the jobsite. If epoxy coating is required, test samples will be taken after the headed bar reinforcement has been prepared for epoxy coating. The Engineer will be at the testing site within a maximum of one week after receiving written notification that the samples are at the testing site and ready for testing. In the event the Engineer fails to be present at the testing site within the time allowed, and if, in the opinion of the Engineer, completion of the work is delayed or interfered with by failure of the Engineer to be present at the testing site, the Contractor will be compensated for any resulting loss in the same manner as provided for in Section 8-1.09, "Right of Way Delays," of the Standard Specifications.

A minimum of 3 samples from each production lot shall be tested. One tensile test shall be conducted on each sample.

Tensile tests shall conform to the requirements specified in ASTM Designation: A 970/A 970M, Section 7, except that at rupture, there shall be visible signs of necking in the reinforcing bar 1) at a minimum distance of one bar diameter away from the head to bar connection for friction welded headed bar reinforcement, or 2) outside the affected zone for integrally forged headed bar reinforcement.

The affected zone for integrally forged headed bar reinforcement is the portion of the reinforcing bar where any properties of the bar, including the physical, metallurgical, or material characteristics, have been altered during the manufacturing process.

If one of the test specimens fails to meet the specified requirements, one retest shall be performed on one additional sample, selected by the Engineer, from the same production lot. If the additional test specimen, or if more than one of the original test specimens fail to meet these requirements, all headed bar reinforcement in the lot represented by the tests will be rejected in conformance with the provisions in Section 6-1.04, "Defective Materials," of the Standard Specifications.

A Production Test Report for all testing performed on each lot shall be prepared by the independent testing laboratory and submitted to the Engineer as specified herein. The report shall be signed by an engineer who represents the laboratory and is registered as a Civil Engineer in the State of California. The report shall include the following information for each set: contract number, bridge number, lot number, bar size, type of headed bar reinforcement, physical conditions of test sample, any notable defects, limits of affected zone, location of visible necking area, and the ultimate strength of each headed bar.

Each unit of headed bar reinforcement in a production lot to be shipped to the site shall be tagged in a manner such that production lots can be accurately identified at the jobsite. All unidentified headed bar reinforcement received at the jobsite will be rejected.

MEASUREMENT AND PAYMENT

Quantities of headed bar reinforcement will be measured as units determined from the number of heads shown on the plans or as directed by the Engineer.

The contract unit price paid for headed bar reinforcement shall include full compensation for furnishing all labor, materials, tools, equipment, and incidentals, and for doing all the work involved in furnishing headed bar reinforcement, including conforming to all testing requirements, as shown on the plans, as specified in the Standard Specifications and these special provisions, and as directed by the Engineer.

Bar reinforcement to be used in the manufacture of headed bar reinforcement and placing the completed headed bar reinforcement into the work will be measured and paid for as specified in Section 52, "Reinforcement," of the Standard Specifications, except that the lengths to be used in

the computation of calculated masses of the bar reinforcement shall be the entire length of the completed headed bar, including heads.

10-1.__ MISCELLANEOUS METAL (BRIDGE)

Miscellaneous metal (bridge) shall conform to the provisions for miscellaneous bridge metal in Section 75, "Miscellaneous Metal," of the Standard Specifications and these special provisions.

Miscellaneous metal (bridge) shall consist of the miscellaneous bridge metal items listed in Section 75-1.03, "Miscellaneous Bridge Metal," of the Standard Specifications, and the following:

A. Bumper plate and studs
B. Threaded anchor rods for bearings
C. Anchor rods, nuts, washers, and XXS pipe for Skid Bent Foundations

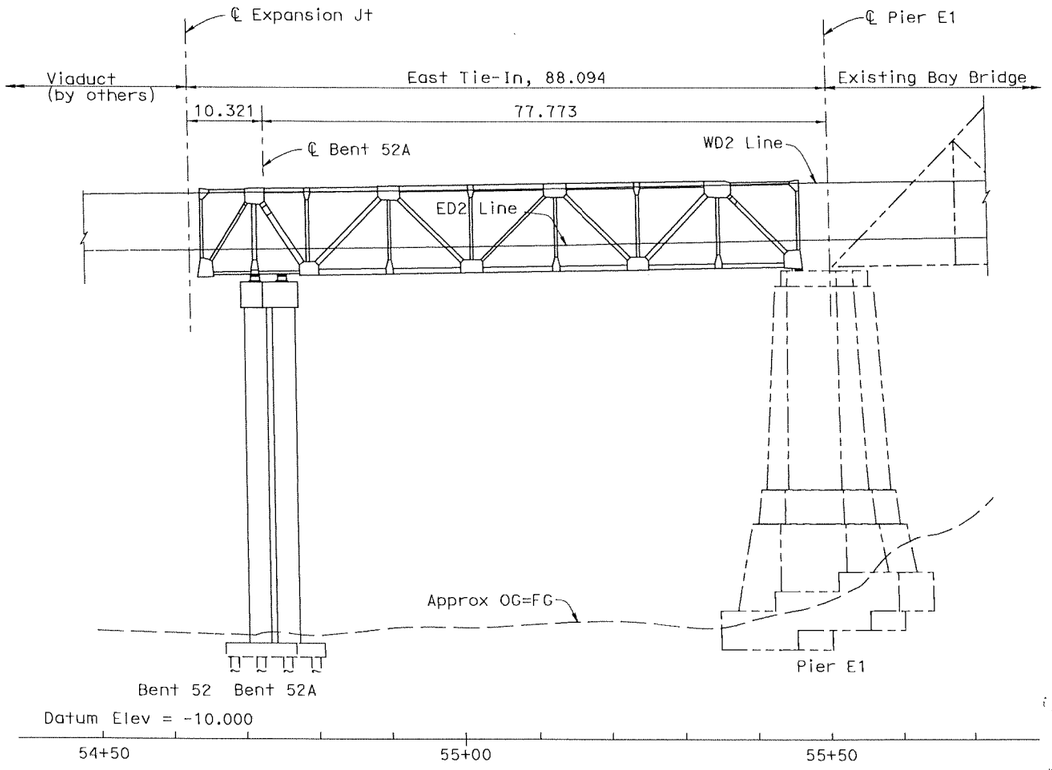

PROJECTED ELEVATION

1:400

Note: Longitudinal dimensions measured along "WD2" or "ED2" line. For clarity, north truss is not shown.

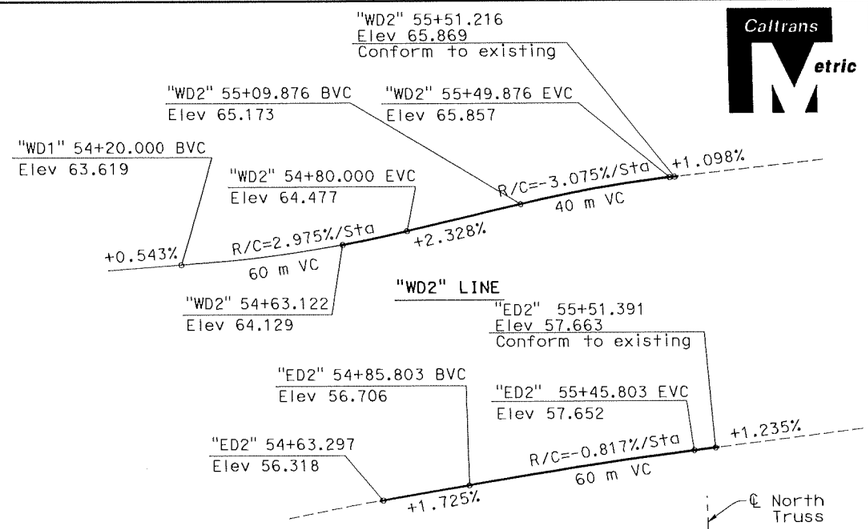

PROFILE GRADE

NO SCALE

CONTRACT NO. 04-0120R4

CONTRACT CHANGE ORDER NO 90

SHEET 195 OF 217

LEGEND:

- Indicates Existing Structure
- Indicates Bridge Removal
- Indicates Westbound Traffic
- Indicates Eastbound Traffic
- Indicates Minimum Clearance (See Note 3)

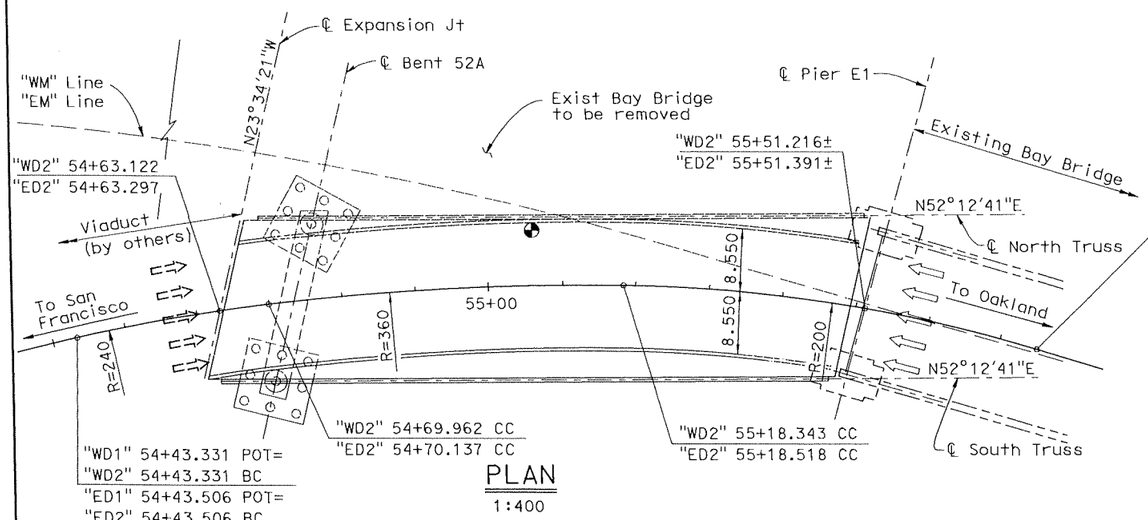

PLAN

1:400

"WD2" 55+75.148 EC=
"WD1" 55+75.755 POT
"ED2" 55+75.323 EC=
"ED1" 55+75.930 POT

Notes:

1. The Contractor shall verify all controlling field dimensions before ordering or fabricating any material.
2. For General Notes, Index to Caltrans Standard Plans, Pile Data Table, see "General Notes" sheets.
3. For section showing minimum clearance, see "Typical Section" sheet.

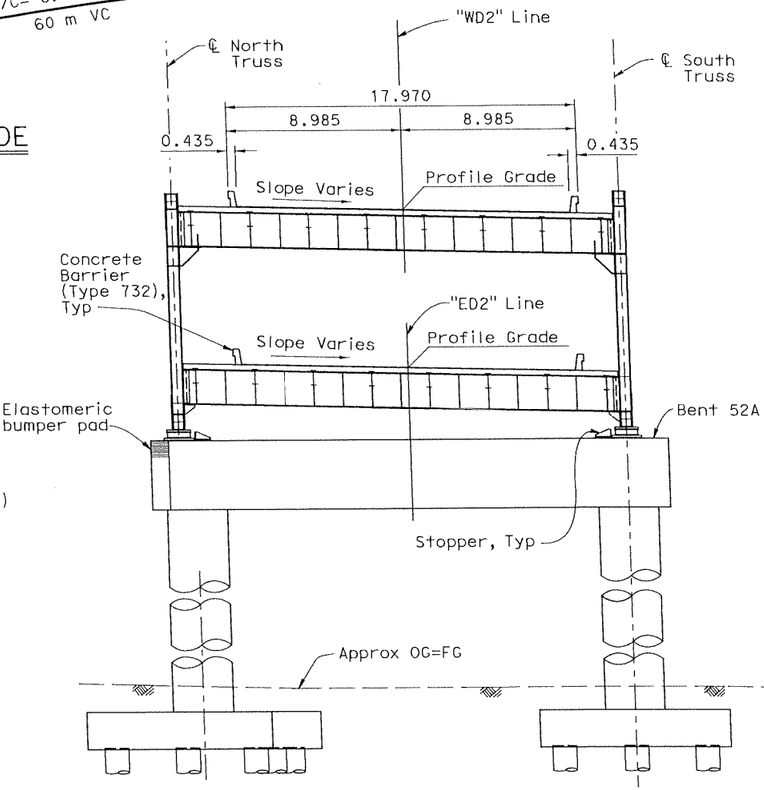

TYPICAL SECTION

1:150

Note: Dimensions measured perpendicular to "WD2" or "ED2" line.

ALL DIMENSIONS ARE IN METERS UNLESS OTHERWISE SHOWN

DIST	COUNTY	ROUTE	KILOMETER POST TOTAL PROJECT	SHEET No	TOTAL
04	SF	80	12.6/13.2	1	214

Sajid Abbas
REGISTERED CIVIL ENGINEER

11-5-07
PLANS APPROVAL DATE

REGISTERED PROFESSIONAL ENGINEER — Sajid Abbas — No. C 055274 — Exp. 12/31/09 — CIVIL — STATE OF CALIFORNIA

The State of California or its officers or agents shall not be responsible for the accuracy or completeness of electronic copies of this plan sheet.

T.Y.LIN / MOFFATT & NICHOL
Two Harrison Street, Suite 500
San Francisco, CA 94105

65% SUBMITTAL

DATE PLOTTED => 11/4/2007 TIME PLOTTED => 12:56:07 PM
FILE => P:\BB\04-012001\ETI\100% Submittal\aagp01.dgn
USERNAME => Alee

T. Ostrom/M. Whiteside/A. Akinsanya	DESIGN	BY S. Abbas	CHECKED A. Pan	LOAD FACTOR DESIGN	LIVE LOADING: HS20-44 AND ALTERNATIVE AND PERMIT DESIGN LOAD		
DESIGN OVERSIGHT	DETAILS	BY S. Lee	CHECKED A. Pan	LAYOUT	BY	CHECKED	
SIGN OFF DATE	QUANTITIES	BY H. Nelson	CHECKED A. Lee	SPECIFICATIONS	BY	PLANS AND SPECS COMPARED	

PREPARED FOR THE STATE OF CALIFORNIA DEPARTMENT OF TRANSPORTATION

M. Sah — PROJECT ENGINEER
S. Abbas — PROJECT MANAGER
CU
EA 0120R4

BRIDGE NO. 34-0006 (TEMP)
KP(PM) 12.6

DISREGARD PRINTS BEARING EARLIER REVISION DATES →

REVISION DATES (PRELIMINARY STAGE ONLY): 4/18/01 11/5/01

SHEET 1 OF 214

DESIGN GENERAL PLAN SHEET (METRIC) (REV.3/1/99)
◆DATE◆ ◆TIME◆ Pen Table File

ORIGINAL SCALE IN MILLIMETERS FOR REDUCED PLANS 0 10 20 30 40 50 60 70 80 90 100

FILE => P:\BB\04-012001\ETI\100% Submittal\aagp01.dgn

SAN FRANCISCO OAKLAND BAY BRIDGE
EAST SPAN SEISMIC SAFETY PROJECT

EAST TIE-IN
GENERAL PLAN

INDEX TO PLANS

SHEET NO. TITLE

(Note 1)
1. GENERAL PLAN
2. INDEX TO PLANS
3. GENERAL NOTES NO. 1

4. GENERAL NOTES NO. 2
5. DECK CONTOURS

(Note 1)
6. FOUNDATION PLAN
7. BENT 52A LAYOUT
8. BENT CAP DETAILS NO. 1
9. BENT CAP DETAILS NO. 2
10. BENT CAP DETAILS NO. 3

11. BENT CAP DETAILS NO. 4

(Note 1)
12. BENT 52A FOOTING DETAILS NO. 1
13. BENT 52A FOOTING DETAILS NO. 2
14. SKID BENT FOOTING DETAILS NO. 1
15. SKID BENT FOOTING DETAILS NO. 2
16. SKID BENT FOOTING DETAILS NO. 3
17. SKID BENT FOOTING DETAILS NO. 4
18. SKID BENT FOOTING DETAILS NO. 5
19. SKID BENT FOOTING DETAILS NO. 6

20. SHEET NOT USED
21. SUPPORT AT PIER E1
22. SUPPORT AT PIER E1 DETAILS NO. 1
23. SUPPORT AT PIER E1 DETAILS NO. 2
24. SUPPORT AT PIER E1 DETAILS NO. 3
25. SUPPORT AT PIER E1 DETAILS NO. 4
26. SHEET NOT USED
27. FRAMING PLAN NO. 1
28. FRAMING PLAN NO. 2
29. TYPICAL SECTION
30. SHEET NOT USED
31. SHEET NOT USED
32. TRUSS LAYOUT NO. 1
33. TRUSS LAYOUT NO. 2
34. TRUSS LAYOUT NO. 3
35. TRUSS LAYOUT NO. 4
36. TRUSS JOINT DETAILS NO. 1
37. TRUSS JOINT DETAILS NO. 2
38. TRUSS JOINT DETAILS NO. 3
39. TRUSS JOINT DETAILS NO. 4
40. TRUSS JOINT DETAILS NO. 5
41. TRUSS JOINT DETAILS NO. 6
42. TRUSS JOINT DETAILS NO. 7
43. TRUSS JOINT DETAILS NO. 8
44. TRUSS JOINT DETAILS NO. 9
45. TRUSS JOINT DETAILS NO. 10
46. TRUSS JOINT DETAILS NO. 11
47. TRUSS JOINT DETAILS NO. 12
48. TRUSS JOINT DETAILS NO. 13
49. TRUSS JOINT DETAILS NO. 14
50. TRUSS JOINT DETAILS NO. 15
51. TRUSS JOINT DETAILS NO. 16
52. TRUSS JOINT DETAILS NO. 17
53. TRUSS JOINT DETAILS NO. 18
54. SHEET NOT USED
55. SHEET NOT USED
56. SHEET NOT USED
57. FLOOR BEAM DETAILS NO. 1
58. FLOOR BEAM DETAILS NO. 2
59. FLOOR BEAM DETAILS NO. 3
60. SHEET NOT USED
61. STRINGER DETAILS NO. 1
62. STRINGER DETAILS NO. 2
63. STRINGER DETAILS NO. 3
64. SHEET NOT USED
65. UPPER LATERAL BRACING LAYOUT NO. 1
66. UPPER LATERAL BRACING LAYOUT NO. 2
67. LOWER LATERAL BRACING LAYOUT NO. 1
68. LOWER LATERAL BRACING LAYOUT NO. 2
69. LATERAL BRACING DETAILS NO. 1
70. LATERAL BRACING DETAILS NO. 2
71. LATERAL BRACING DETAILS NO. 3
72. LATERAL BRACING DETAILS NO. 4
73. LATERAL BRACING DETAILS NO. 5
74. BEAM SEAT DETAILS NO. 1
75. BEAM SEAT DETAILS NO. 2
76. SWAY BRACKET DETAILS
77. FLOOR BEAM BRACKET DETAILS
78. STEEL GIRDER DETAILS
79. MAN HOLE & HAND HOLE DETAILS
80. CONCRETE DECK DETAILS NO. 1
81. CONCRETE DECK DETAILS NO. 2
82. SHEET NOT USED
83. SHEET NOT USED
84. POUR SEQUENCE
85. BENT 52A EXPANSION JOINT LAYOUT
86. BENT 52A EXPANSION JOINT DETAILS NO. 1
87. BENT 52A EXPANSION JOINT DETAILS NO. 2
88. BENT 52A EXPANSION JOINT DETAILS NO. 3
89. BENT 52A EXPANSION JOINT DETAILS NO. 4
90. BENT 52A EXPANSION JOINT DETAILS NO. 5
91. BENT 52A EXPANSION JOINT DETAILS NO. 6
92. SHEET NOT USED
93. PIER E1 EXPANSION JOINT LAYOUT
94. PIER E1 EXPANSION JOINT DETAILS NO. 1
95. PIER E1 EXPANSION JOINT DETAILS NO. 2
96. PIER E1 EXPANSION JOINT DETAILS NO. 3
97. PIER E1 EXPANSION JOINT DETAILS NO. 4
98. PIER E1 EXPANSION JOINT DETAILS NO. 5
99. PIER E1 EXPANSION JOINT DETAILS NO. 6
100. SHEET NOT USED
101. SHEET NOT USED
102. BEARING DETAILS NO. 1
103. BEARING DETAILS NO. 2
104. SHEET NOT USED
105. SHEET NOT USED
106. SHEET NOT USED
107. SHEET NOT USED
108. SHEET NOT USED
109. EXISTING TRUSS SPANS YB1,YB2,YB3 & YB4
110. EXISTING TRUSS LAYOUT
111. EXISTING TRUSS DETAILS NO. 1
112. EXISTING TRUSS DETAILS NO. 2
113. EXISTING TRUSS DETAILS NO. 3
114. EXISTING TRUSS DETAILS NO. 4
115. EXISTING TRUSS DETAILS NO. 5
116. EXISTING TRUSS DETAILS NO. 6
117. SHEET NOT USED
118. SKID BENT LAYOUT
119. SKID BENT SECTIONS NO. 1
120. SKID BENT SECTIONS NO. 2
121. SKID BENT SECTIONS NO. 3
122. SHEET NOT USED
123. SKID BENT DETAILS NO. 1
124. SKID BENT DETAILS NO. 2
125. SKID BENT DETAILS NO. 3
126. SKID BENT DETAILS NO. 4
127. SKID BENT DETAILS NO. 5
128. SKID BENT DETAILS NO. 6
129. SKID BENT DETAILS NO. 7
130. SKID BENT DETAILS NO. 8
131. SHEET NOT USED
132. SHEET NOT USED
133. SKID BEAM DETAILS NO. 1
134. SKID BEAM DETAILS NO. 2
135. SKID BEAM DETAILS NO. 3
136. SKID BEAM DETAILS NO. 4
137. SKID BEAM DETAILS NO. 5
138. SKID BEAM DETAILS NO. 6
139. SHEET NOT USED
140. SHEET NOT USED
141. ROLL-OUT ROLL-IN OPERATION SEQUENCE NO. 1
142. ROLL-OUT ROLL-IN OPERATION SEQUENCE NO. 2
143. ROLL-OUT ROLL-IN OPERATION SEQUENCE NO. 3
144. ROLL-OUT ROLL-IN OPERATION SEQUENCE NO. 4
145. ROLL-OUT ROLL-IN OPERATION SEQUENCE NO. 5
146. ROLL-OUT ROLL-IN OPERATION SEQUENCE NO. 6
147. ROLL-OUT ROLL-IN TOLERANCES AND DEFLECTION

148. TO 200. SHEETS NOT USED

(Note 1)
201. LOG OF TEST BORINGS NO. 1
202. LOG OF TEST BORINGS NO. 2
203. LOG OF TEST BORINGS NO. 3
204. LOG OF TEST BORINGS NO. 4
205. LOG OF TEST BORINGS NO. 5
206. LOG OF TEST BORINGS NO. 6
207. LOG OF TEST BORINGS NO. 7
208. LOG OF TEST BORINGS NO. 8
209. LOG OF TEST BORINGS 1 OF 17
210. LOG OF TEST BORINGS 3 OF 17
211. LOG OF TEST BORINGS 5 OF 17
212. LOG OF TEST BORINGS 6 OF 17
213. LOG OF TEST BORINGS 16 OF 17
214. LOG OF TEST BORINGS 17 OF 17

Caltrans Metric

DIST	COUNTY	ROUTE	KILOMETER POST TOTAL PROJECT	SHEET No	TOTAL
04	SF	80	12.6/13.2	2	214

Madan K. Sah
REGISTERED CIVIL ENGINEER

11-5-07
PLANS APPROVAL DATE

REGISTERED PROFESSIONAL ENGINEER — Madan Kumar Sah — No. C59203 — Exp. 06/30/09 — CIVIL — STATE OF CALIFORNIA

The State of California or its officers or agents shall not be responsible for the accuracy or completeness of electronic copies of this plan sheet.

T.Y. LIN / MOFFATT & NICHOL
Two Harrison Street, Suite 500
San Francisco, CA 94105

CONTRACT NO. 04-0120R4

CONTRACT CHANGE ORDER NO 90

SHEET 190 OF 227

100% PS&E

Notes:

1. Sheets pertaining to 100% Concrete Substructure submittal.

ALL DIMENSIONS ARE IN MILLIMETERS UNLESS OTHERWISE SHOWN

SAN FRANCISCO OAKLAND BAY BRIDGE
EAST SPAN SEISMIC SAFETY PROJECT

EAST TIE-IN

INDEX TO PLANS

DESIGN	BY M. Sah	CHECKED A. Pan	
DETAILS	BY S. Lee	CHECKED A. Pan	
QUANTITIES	BY H. Nelson	CHECKED A. Lee	

T. Ostrom/M. Whiteside/A. Akinsanya
DESIGN OVERSIGHT

SIGN OFF DATE

PREPARED FOR THE STATE OF CALIFORNIA DEPARTMENT OF TRANSPORTATION

M. Sah — PROJECT ENGINEER
S. Abbas — PROJECT MANAGER

BRIDGE NO. 34-0006 (TEMP)
KILOMETER POST 12.6

CU 34-0006
EA 0120R4

DISREGARD PRINTS BEARING EARLIER REVISION DATES →

REVISION DATES (PRELIMINARY STAGE ONLY): 11/5/07

SHEET 2 OF 214

DESIGN DETAIL SHEET (METRIC) (REV. 3/1/98)
@DATE@ @TIME@ Pen Table File

ORIGINAL SCALE IN MILLIMETERS FOR REDUCED PLANS 0 10 20 30 40 50 60 70 80 90 100

FILE => P:\BB\04-012001\ETI\100% Submittal\aaitp-1a.dgn

USERNAME => ALee
DATE PLOTTED => 11/4/2007
TIME PLOTTED => 7:59:19 PM
FILE => P:\BB\04-012001\ETI\100% Submittal\aaitp-1a.dgn

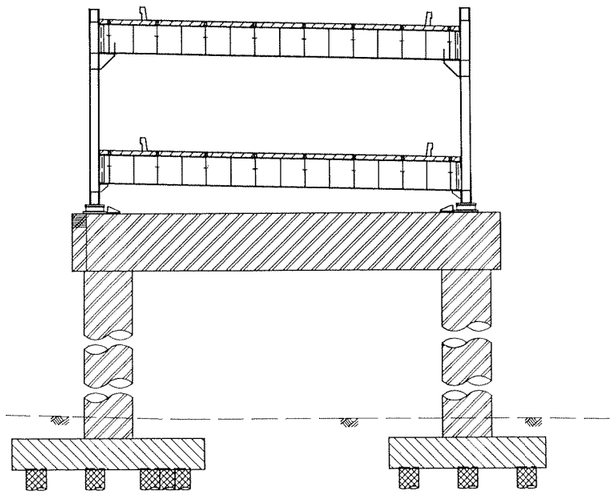

CONCRETE STRENGTH AND TYPE LIMITS

No Scale

LEGEND:

- Indicates Lightweight Structural Concrete, Bridge (f'c = 28 MPa at 28 Days)
- Indicates Structural Concrete, Bridge (f'c = 28 MPa at 28 days)
- Indicates Structural Concrete, Bridge Footing (f'c = 25 MPa at 28 Days)
- Indicates Cast-in-Drilled-Hole Concrete Piling (f'c = 28 MPa at 28 Days)

DESIGN: Caltrans Bridge Design Specifications, April 2000 (LFD) (1996 AASHTO with Interims and Revisions by Caltrans)

SEISMIC DESIGN: Caltrans Seismic Design Criteria, SDC, V 1.4, June 2006

DEAD LOADS: Includes 1675 N/m2 for future wearing surface

LIVE LOADING: HS20-44

SEISMIC LOADING: Site Specific Response Spectrum (92-year return period)

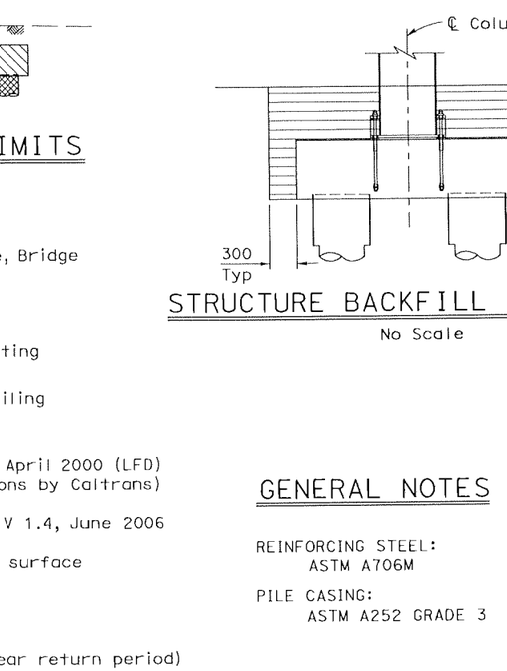

CONTRACT NO. 04-0120R4

CONTRACT CHANGE ORDER NO 90

SHEET 197 OF 227

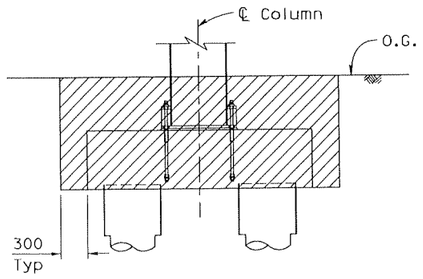

STRUCTURE EXCAVATION TYPE H & DH

No Scale

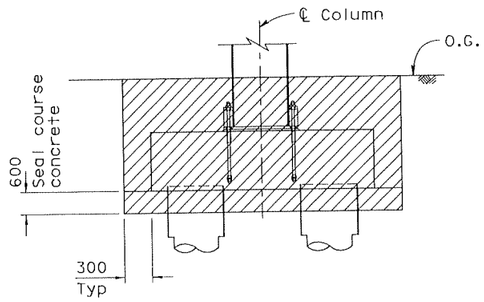

STRUCTURE EXCAVATION TYPE AH

No Scale

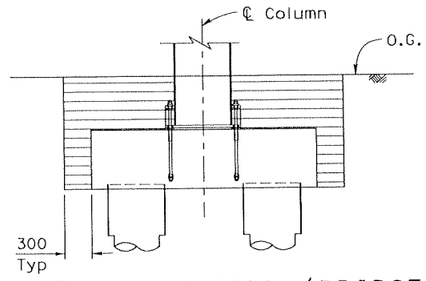

STRUCTURE BACKFILL (BRIDGE)

No Scale

Notes:

1. Structure Excavation
   - Type H = A1W, A1E, A2W, A2E, A3W, A3E, B1W, B1E, B2E, B3E
   - Type DH= 52AN, 52AS, A4E, A5E, B4W, B4E, B5W, B5E
   - Type AH= A6W, A6E, B6W, B6E
2. Structure Backfill
   - Type H = A1W, A1E, A2W, A2E, A3W, A3E, B1W, B1E, B2E, B3E

GENERAL NOTES

REINFORCING STEEL: ASTM A706M

PILE CASING: ASTM A252 GRADE 3

STANDARD PLANS DATED JULY 1999 WITH ERRATUM NO. 99-1

A10A	ABBREVIATIONS
A10B	SYMBOLS
A10C	LIMITS OF PAYMENT FOR EXCAVATION AND BACKFILL - BRIDGE
RSP B11-55	CONCRETE BARRIER TYPE 732

STANDARD PLAN SHEET NO.
DETAIL NO.

PILE DATA TABLE

Location	Pile Type	Design Loading	Nominal Resistance (kN)	Pile / Casing Cut off Elev. (m)	Specified Casing Tip Elevation (m)	Design Tip Elevation (m)	Specified Pile Tip Elevation (m)
BENT 52A							
52AN	1.22 m CIDH	N/A	6100 (1), 2200 (2)	1.625	No casing	-11.0 (1), -5.0 (2), -8.0 (3)	-11.0
52AS	1.22 m CIDH	N/A	6100 (1), 1450 (2)	1.625	-2.0	-16.0 (1), -8.5 (2), -11.0 (3)	-16.0
SKID BENT A							
A1W	1.22 m CIDH	N/A	4500 (1), 2150 (2)	13.615	No casing	+8.0 (1), +11.0 (2), +8.5 (3)	+8.0
A1E	1.22 m CIDH	N/A	4500 (1), 2150 (2)	13.615	No casing	+8.0 (1), +11.0 (2), +8.5 (3)	+8.0
A2W	1.22 m CIDH	N/A	4500 (1), 2150 (2)	13.615	No casing	+7.0 (1), +9.5 (2), +8.0 (3)	+7.0
A2E	1.22 m CIDH	N/A	4500 (1), 2150 (2)	13.615	No casing	+7.0 (1), +9.5 (2), +8.0 (3)	+7.0
A3W	1.22 m CIDH	N/A	4500 (1), 2800 (2)	7.495	No casing	-1.0 (1), +2.0 (2), 0 (3)	-1.0
A3E	1.22 m CIDH	N/A	4500 (1), 2800 (2)	7.495	No casing	-1.0 (1), +2.0 (2), 0 (3)	-1.0
A4E	1.22 m CIDH	N/A	8450 (1), 5550 (2)	1.925	-1.0	-14.0 (1), -12.5 (2), -10.5 (3)	-14.0
A5E	1.22 m CIDH	N/A	8450 (1), 5550 (2)	1.925	-2.0	-19.5 (1), -17.5 (2), -13.5 (3)	-19.5
A6W	1.22 m CIDH	N/A	10800 (1), 6150 (2)	0.625	-4.5	-24.0 (1), -21.5 (2), -12.5 (3)	-24.0
A6E	1.22 m CIDH	N/A	10800 (1), 6150 (2)	0.625	-4.5	-24.0 (1), -21.5 (2), -12.5 (3)	-24.0
SKID BENT B							
B1W	1.22 m CIDH	N/A	3900 (1), 1850 (2)	15.525	No casing	+9.5 (1), +10.0 (2), +9.5 (3)	+9.5
B1E	1.22 m CIDH	N/A	3900 (1), 1850 (2)	15.525	No casing	+9.5 (1), +10.0 (2), +9.5 (3)	+9.5
B2E	1.22 m CIDH	N/A	3900 (1), 1850 (2)	15.525	No casing	+8.0 (1), +10.0 (2), +9.5 (3)	+8.0
B3E	1.22 m CIDH	N/A	4500 (1), 2550 (2)	15.525	No casing	+6.5 (1), +8.0 (2), +8.0 (3)	+6.5
B4W	1.22 m CIDH	N/A	8450 (1), 5550 (2)	2.525	No casing	-10.0 (1), -8.0 (2), -5.0 (3)	-10.0
B4E	1.22 m CIDH	N/A	8450 (1), 5550 (2)	2.525	No casing	-10.0 (1), -8.0 (2), -5.0 (3)	-10.0
B5W	1.22 m CIDH	N/A	8450 (1), 5550 (2)	2.525	-1.0	-16.0 (1), -14.7 (2), -11.5 (3)	-16.0
B5E	1.22 m CIDH	N/A	8450 (1), 5550 (2)	2.525	-1.0	-16.0 (1), -14.7 (2), -11.5 (3)	-16.0
B6W	1.22 m CIDH	N/A	10800 (1), 6150 (2)	1.225	-1.0	-23.5 (1), -19.0 (2), -12.0 (3)	-23.5
B6E	1.22 m CIDH	N/A	10800 (1), 6150 (2)	1.225	-1.0	-23.5 (1), -19.0 (2), -12.0 (3)	-23.5

Design Tip Elevation is controlled by the following demands: (1) Compression (2) Tension (3) Lateral

ALL DIMENSIONS ARE IN MILLIMETERS UNLESS OTHERWISE SHOWN

DIST	COUNTY	ROUTE	KILOMETER POST TOTAL PROJECT	SHEET No	TOTAL
04	SF	80	12.6/13.2	3	214

Sajid Abbas
REGISTERED CIVIL ENGINEER

11-5-07
PLANS APPROVAL DATE

REGISTERED PROFESSIONAL ENGINEER — Sajid Abbas — No C 055274 — Exp 12/31/09 — CIVIL — STATE OF CALIFORNIA

The State of California or its officers or agents shall not be responsible for the accuracy or completeness of electronic copies of this plan sheet.

T.Y. LIN / MOFFATT & NICHOL
Two Harrison Street, Suite 500
San Francisco, CA 94105

100% PS&E

FILE => P:\BB\04-012001\ETI\100% Submittal\aaitp.dgn
TIME PLOTTED => 1:01:58 PM
DATE PLOTTED => 11/4/2007
USERNAME => Alee

T. Ostrom/M. Whiteside/A. Akinsanya	DESIGN	S. Abbas	A. Pan	PREPARED FOR THE STATE OF CALIFORNIA DEPARTMENT OF TRANSPORTATION
DESIGN OVERSIGHT	DETAILS	S. Lee	A. Pan	
SIGN OFF DATE	QUANTITIES	H. Nelson	A. Lee	

M. Sah, PROJECT ENGINEER
S. Abbas, PROJECT MANAGER
CU EA 0120R4

BRIDGE NO. 34-0006 (TEMP)
KILOMETER POST 12.6

SAN FRANCISCO OAKLAND BAY BRIDGE EAST SPAN SEISMIC SAFETY PROJECT

EAST TIE-IN

GENERAL NOTES NO. 1

DISREGARD PRINTS BEARING EARLIER REVISION DATES →
REVISION DATES (PRELIMINARY STAGE ONLY): 4/16/07 | 11/5/07

SHEET 3 OF 214

DESIGN DETAIL SHEET (METRIC) (REV. 3/1/98)
@DATE@ @TIME@ Pen Table File

ORIGINAL SCALE IN MILLIMETERS FOR REDUCED PLANS 0 10 20 30 40 50 60 70 80 90 100

FILE => P:\BB\04-012001\ETI\100% Submittal\aaitp.dgn

DIST	COUNTY	ROUTE	KILOMETER POST TOTAL PROJECT	SHEET No	TOTAL
04	SF	80	12.6/13.2	6	214

Sajid Abbas
REGISTERED CIVIL ENGINEER

11-5-07
PLANS APPROVAL DATE

REGISTERED PROFESSIONAL ENGINEER — Sajid Abbas — No C 055274 — Exp 12/31/09 — CIVIL — STATE OF CALIFORNIA

The State of California or its officers or agents shall not be responsible for the accuracy or completeness of electronic copies of this plan sheet.

T.Y. LIN / MOFFATT & NICHOL
Two Harrison Street, Suite 500
San Francisco, CA 94105

Caltrans Metric

Bent W4L Footing (by others)

Bent W4R Footing (by others)

Bent W3L Footing (by others)

Bent W3R Footing (by others)

℄ Skid Bent A N 23°34'21" W

℄ Skid Bent B N 23°34'21" W

℄ Pier YB4 N29°09'37"W±

℄ Pier E1 N 20°58'18"W±

"WM" Line
"EM" Line

℄ Bent 52 (by others)

℄ Bent 52A N23°34'21"W

52AN 1.500

52AS 1.500

A1W A1E A2W A2E A3W A3E A4E A5E A6W A6E

B1W B1E B2W B2E B3W B3E B4W B4E B5W B5E B6W B6E

12.000 18.592 24.591 4.793 11.224 11.523 23.518 10.852 15° 15.000 15.600 17.277 7.325 14.800 13.000 6.500 6.500 6.500 6.500

"WD2" 54+73.443
"ED2" 54+73.618
"WD2" 54+80.894
"ED2" 54+81.069

"WD2" 55+18.343 CC
"ED2" 55+18.518 CC

"WD2" 55+26.466
"ED2" 55+26.641

"WD2" 55+51.216±
"ED2" 55+51.391±

"WD1" Line "ED1" Line
"WD2" Line "ED2" Line

N 39°11'56" E

54+50

55+50

R1=240

R2=360

R3=200

"WD1" 54+43.331 POT = "ED1" 54+43.506 BC
"WD2" 54+43.331 BC = "ED2" 54+43.506 POT

"WD2" 54+69.962 CC
"ED2" 54+70.137 CC

"WD2" 55+75.148 EC = "WD1" 55+75.755 POT
"ED2" 55+75.323 EC = "ED1" 55+75.930 POT

N 69°31'48" E

Tank to be removed by others

"WD2" Line	"ED2" Line
R1= 240.000	R1= 240.000
△ = 6°21'28"	△ = 6°21'28"
T = 13.329	T = 13.329
L = 26.632	L = 26.632
"WD2" Line	**"ED2" Line**
R2= 360.000	R2= 360.000
△ = 7°42'00"	△ = 7°42'00"
T = 24.227	T = 24.227
L = 48.381	L = 48.381
"WD2" Line	**"ED2" Line**
R3= 200.000	R3= 200.000
△ = 16°16'24"	△ = 16°16'24"
T = 28.595	T = 28.595
L = 56.805	L = 56.805

Skid Bent Bottom of Footing Elevation

A1W	13.49	B1W	15.40
A1E	13.49	B1E	15.40
A2W	13.49	B2W	N/A
A2E	13.49	B2E	15.40
A3W	7.37	B3W	N/A
A3E	7.37	B3E	15.40
A4W	N/A	B4W	2.40
A4E	1.80	B4E	2.40
A5W	N/A	B5W	2.40
A5E	1.80	B5E	2.40
A6W	0.50	B6W	1.10
A6E	0.50	B6E	1.10

Notes:

1. The Contractor shall verify all controlling field dimensions before ordering or fabricating any material.

LEGEND:

- Indicates Existing Structure
- Indicates Bottom of Footing Elevation (See also elevation table above)
- Indicates Vertical CIDH Pile (Not all piles shown)
- Indicates Skid Bent Column
- Indicates Footing Number

Benchmark:

Elevation is based on 1929 National Geodetic Vertical Datum (NGVD).

PLAN
1:250

ALL DIMENSIONS ARE IN METERS UNLESS OTHERWISE SHOWN

CONTRACT NO. 04-0120R4

CONTRACT CHANGE ORDER NO. 90

SHEET 195 OF 227

GEOTECHNICAL PROFESSIONAL APPROVAL DATE

T. Ostrom/M. Whiteside/A. Akinsanya	SCALE:	VERT.DATUM	HORZ.DATUM	DESIGN	BY S. Abbas	CHECKED A. Pan	PREPARED FOR THE STATE OF CALIFORNIA DEPARTMENT OF TRANSPORTATION
DESIGN OVERSIGHT	PHOTOGRAMMETRY AS OF:	ALIGNMENT TIES		DETAILS	BY S. Lee	CHECKED A. Pan	
	SURVEYED BY	DRAFTED BY		QUANTITIES	BY H. Nelson	CHECKED A. Lee	
SIGN OFF DATE	FIELD CHECKED BY	CHECKED BY					

M. Sah	BRIDGE NO.	SAN FRANCISCO OAKLAND BAY BRIDGE EAST SPAN SEISMIC SAFETY PROJECT
PROJECT ENGINEER	34-0006 (TEMP)	EAST TIE-IN
S. Abbas	KILOMETER POST	FOUNDATION PLAN
PROJECT MANAGER	12.6	
CU EA 0120R4	DISREGARD PRINTS BEARING EARLIER REVISION DATES →	REVISION DATES (PRELIMINARY STAGE ONLY) 4/16/07 11/5/07 — SHEET 6 OF 214

FOUNDATION PLAN SHEET (METRIC) (REV. 3/1/99)
@DATE@ @TIME@ Pen Table File

ORIGINAL SCALE IN MILLIMETERS FOR REDUCED PLANS 0 10 20 30 40 50 60 70 80 90 100

100% PS&E

DATE PLOTTED => 11/4/2007 TIME PLOTTED => 1:02:56 PM FILE => P:\BBV04-0120R4\EI\100% Submittal\eafnd.dgn USERNAME => ALee

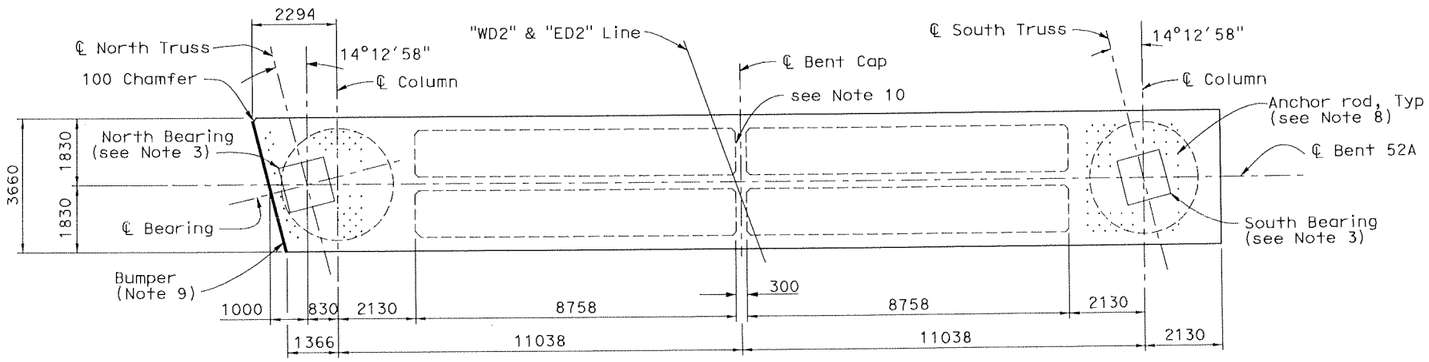

PLAN
1:80

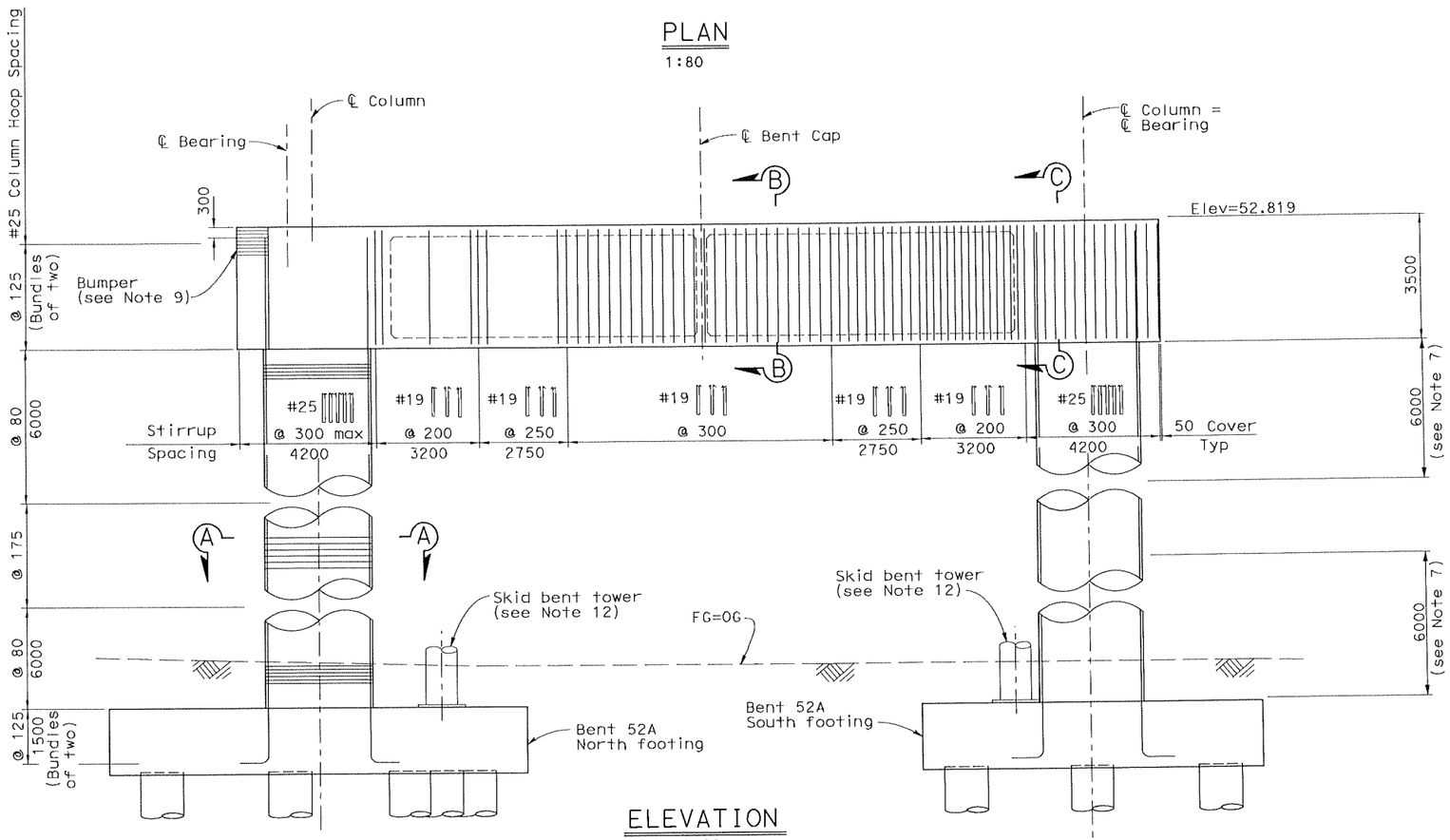

ELEVATION
1:80
STA: "WD2" 54+73.443
Anchor Rod not shown for clarity

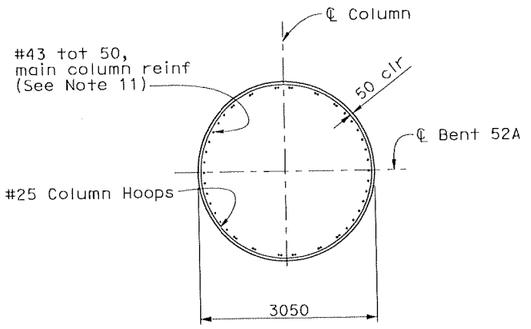

SECTION A-A
1:50

Notes:

1. The Contractor shall verify all controlling field dimensions before ordering or fabricating any material.
2. For footing information, see "Bent 52A Footing Details" sheets.
3. For bearing details, see "Bearing Details" sheets.
4. Splices in main column reinforcement shall be staggered ultimate butt splices.
5. Hoops shall be made continuous with ultimate butt splices.
6. For Bent Cap details and Sections B-B & C-C, see "Bent Cap Details No. 1" sheet.
7. No splices are allowed within this zone for main column reinforcement.
8. For bearing anchor rods locations and details, see "Bent Cap Details No. 2" sheet.
9. For bumper details, see "Bent Cap Details No. 3" sheet.
10. For intermediate diaphragm details, see "Bent Cap Details No. 2" sheet.
11. Bundle column reinforcement, as necessary, to clear Bent Cap longitudinal reinforcement.
12. For Skid bent tower leg connection, see "Bent 52A Footing Details" sheets.

DIST	COUNTY	ROUTE	KILOMETER POST TOTAL PROJECT	SHEET No	TOTAL
04	SF	80	12.6/13.2	7	214

Caltrans Metric

REGISTERED CIVIL ENGINEER

11-5-07
PLANS APPROVAL DATE

The State of California or its officers or agents shall not be responsible for the accuracy or completeness of electronic copies of this plan sheet.

REGISTERED PROFESSIONAL ENGINEER — Richard V. Nutt — No. C 20665 — Exp. 9/30/09 — CIVIL — STATE OF CALIFORNIA

T.Y. LIN / MOFFATT & NICHOL
Two Harrison Street, Suite 500
San Francisco, CA 94105

CONTRACT NO. 04-0Y220 Y4

CONTRACT CHANGE ORDER NO 010

SHEET 141 OF 214

100% PS&E

FILE => P:\BB\04-012001\ETI\100% Submittal\aebntla.dgn
TIME PLOTTED => 1:05:48 PM
DATE PLOTTED => 11/4/2007
USERNAME => Alee

ALL DIMENSIONS ARE IN MILLIMETERS UNLESS OTHERWISE SHOWN

SAN FRANCISCO OAKLAND BAY BRIDGE
EAST SPAN SEISMIC SAFETY PROJECT

EAST TIE-IN

BENT 52A LAYOUT

T. Ostrom/M. Whiteside/A. Akinsanya — DESIGN OVERSIGHT	DESIGN	R. Nutt/M. Chen	A. Pan
SIGN OFF DATE	DETAILS	S. Lee	A. Pan
	QUANTITIES	H. Nelson	A. Lee

PREPARED FOR THE STATE OF CALIFORNIA
DEPARTMENT OF TRANSPORTATION

M. Sah — PROJECT ENGINEER
S. Abbas — PROJECT MANAGER
CU
EA 0120R4

BRIDGE NO. 34-0006 (TEMP)
KILOMETER POST 12.6

DISREGARD PRINTS BEARING EARLIER REVISION DATES →

REVISION DATES (PRELIMINARY STAGE ONLY): 4/16/07 | 11/5/07

SHEET 7 OF 214

DESIGN DETAIL SHEET (METRIC) (REV. 3/1/98)
℄DATE℄ ℄TIME℄ Pen Table File

ORIGINAL SCALE IN MILLIMETERS FOR REDUCED PLANS 0 10 20 30 40 50 60 70 80 90 100

FILE => P:\BB\04-012001\ETI\100% Submittal\aebntla.dgn

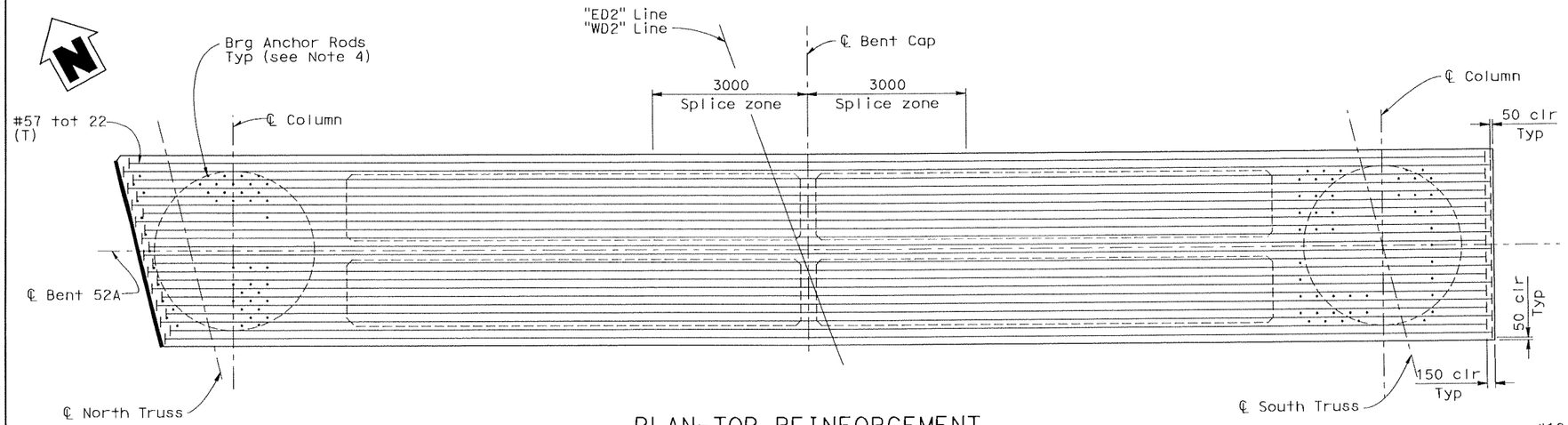

PLAN-TOP REINFORCEMENT

1:50

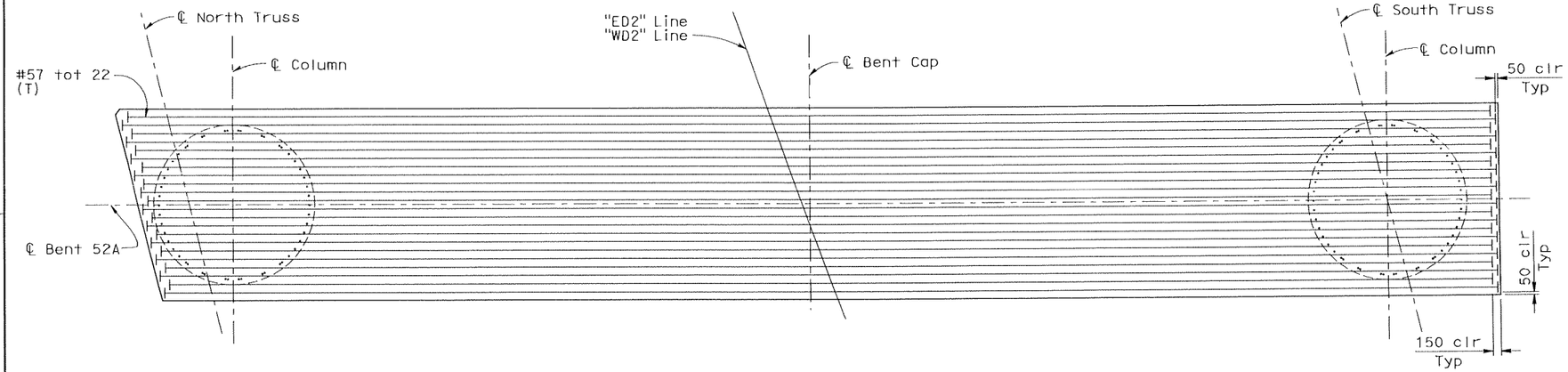

PLAN-BOTTOM REINFORCEMENT

1:50

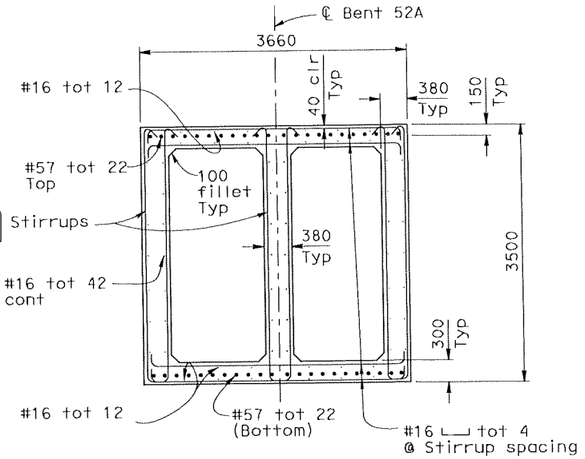

SECTION B-B

1:40

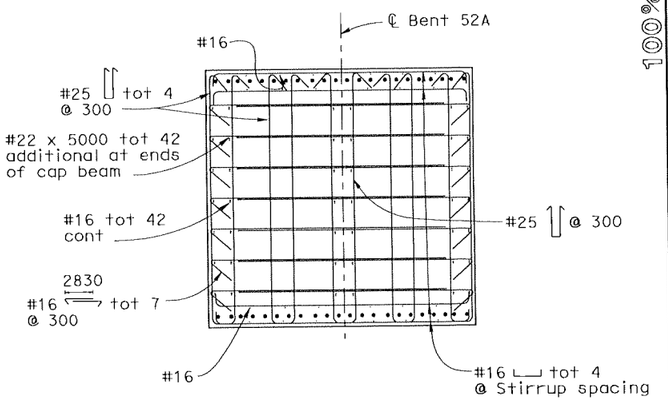

SECTION C-C

1:40

Notes:

1. The Contractor shall verify all controlling field dimensions before ordering or fabricating any material.
2. Adjust top Longitudinal reinforcement to clear bearing anchor rods.
3. For Column reinforcement details, see "Bent 52A Layout" sheet.
4. For bearing anchor rod details, see "Bent Cap Details No. 2" sheet.
5. Splices are allowed only in areas indicated on plan. Splices in main cap reinforcement shall be staggered ultimate butt splices.

LEGEND:

(T) Indicates T-headed bars

CONTRACT NO. 04-0120R4

CONTRACT CHANGE ORDER NO 90

SHEET 206 OF 227

ALL DIMENSIONS ARE IN MILLIMETERS UNLESS OTHERWISE SHOWN

DIST	COUNTY	ROUTE	KILOMETER POST TOTAL PROJECT	SHEET No	TOTAL
04	SF	80	12.6/13.2	8	214

Caltrans Metric

REGISTERED CIVIL ENGINEER

11-5-07
PLANS APPROVAL DATE

REGISTERED PROFESSIONAL ENGINEER — Richard V. Nutt — No. C 20665 — Exp. 9/30/09 — CIVIL — STATE OF CALIFORNIA

The State of California or its officers or agents shall not be responsible for the accuracy or completeness of electronic copies of this plan sheet.

T.Y. LIN / MOFFATT & NICHOL
Two Harrison Street, Suite 500
San Francisco, CA 94105

T. Ostrom/M. WhitesIde/A. Akinsanya DESIGN OVERSIGHT	DESIGN	BY R. Nutt/M. Chen	CHECKED A. Pan	PREPARED FOR THE STATE OF CALIFORNIA DEPARTMENT OF TRANSPORTATION	M. Sah PROJECT ENGINEER
SIGN OFF DATE	DETAILS	BY S. Lee	CHECKED A. Pan		S. Abbas PROJECT MANAGER
	QUANTITIES	BY H. Nelson	CHECKED A. Lee		12.6

BRIDGE NO. 34-0006 (TEMP)
KILOMETER POST

CU
EA 0120R4

SAN FRANCISCO OAKLAND BAY BRIDGE
EAST SPAN SEISMIC SAFETY PROJECT

EAST TIE-IN

BENT CAP DETAILS NO. 1

DESIGN DETAIL SHEET (METRIC) (REV. 3/1/98)
©DATE© ©TIME© Pen Table File

ORIGINAL SCALE IN MILLIMETERS FOR REDUCED PLANS 0 10 20 30 40 50 60 70 80 90 100

DISREGARD PRINTS BEARING EARLIER REVISION DATES

REVISION DATES (PRELIMINARY STAGE ONLY): 11/5/07

SHEET 8 OF 214

FILE => P:\BB\04-012001\ETI\100% Submittal\aebnt01.dgn

100% PS&E

DATE PLOTTED => 11/4/2007 TIME PLOTTED => 1:03:57 PM FILE => P:\BB\04-012001\ETI\100% Submittal\aebnt01.dgn USERNAME => ALee

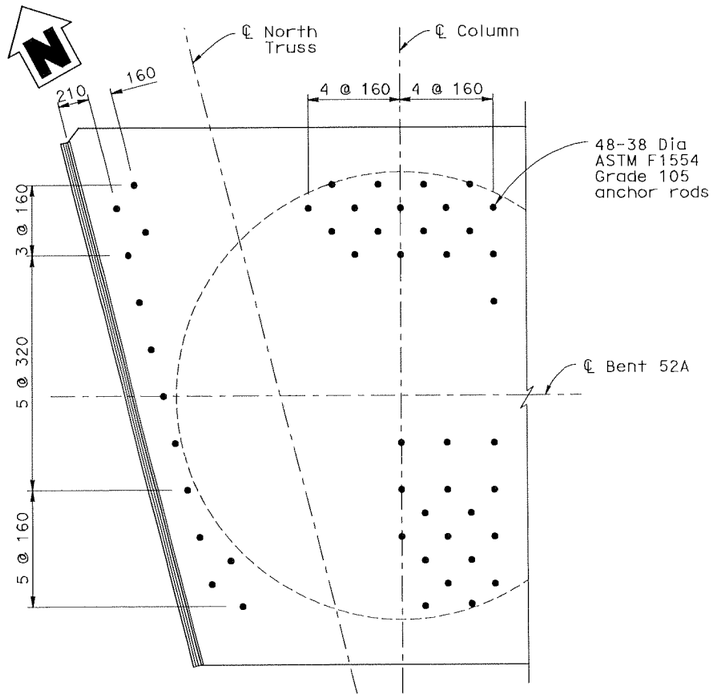

PLAN-ANCHOR RODS AT NORTH BEARING

1:20

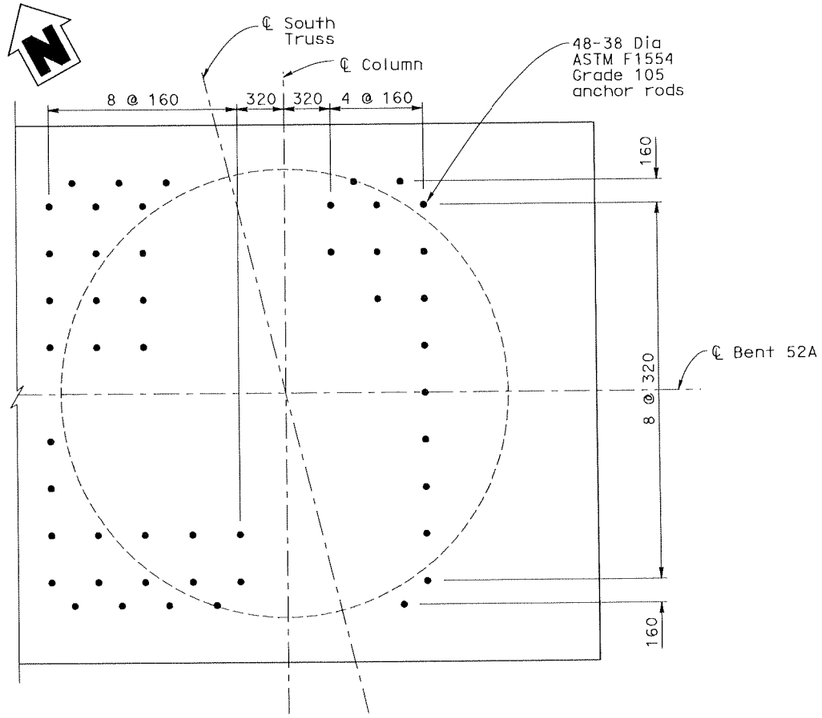

PLAN-ANCHOR RODS AT SOUTH BEARING

1:20

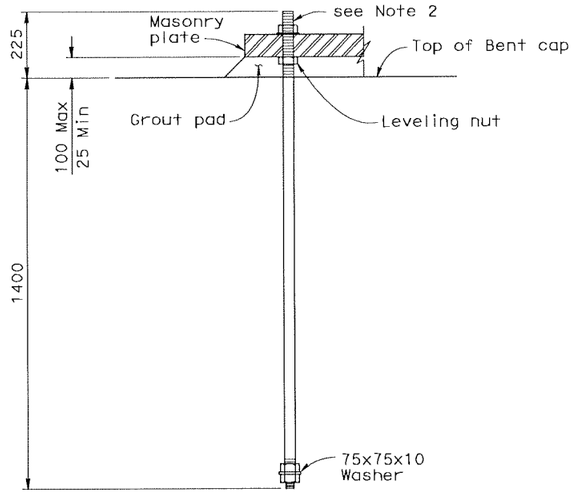

ANCHOR ROD ASSEMBLY

1:10

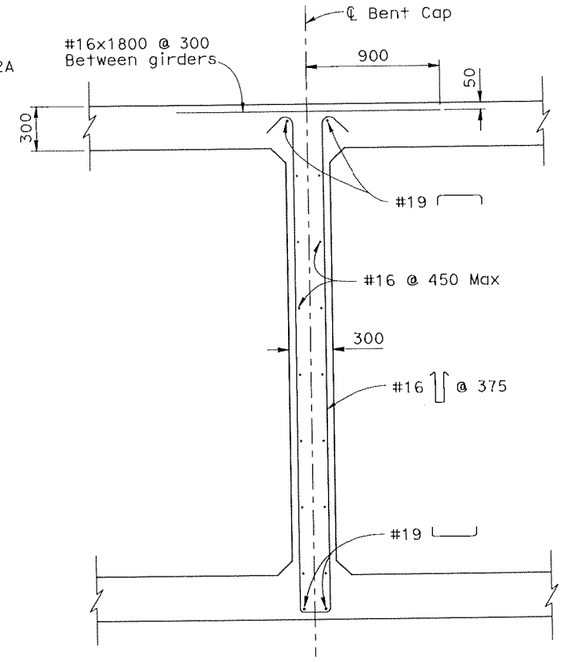

INTERMEDIATE DIAPHRAGM

1:20

Bent cap slab and girder reinforcement not shown for clarity

CONTRACT NO. 04-0120R4

CONTRACT CHANGE ORDER NO 90

SHEET 201 OF 227

Notes:

1. The Contractor shall verify all controlling field dimensions before ordering or fabricating any material.
2. All anchor rods shall be threaded 38 mm Dia F1554 Grade 105, galvanized, with oversized holes in masonry plate, unless noted otherwise.

DIST	COUNTY	ROUTE	KILOMETER POST TOTAL PROJECT	SHEET No	TOTAL
04	SF	80	12.6/13.2	9	214

Caltrans Metric

Mark Chen
REGISTERED CIVIL ENGINEER

11-5-07
PLANS APPROVAL DATE

REGISTERED PROFESSIONAL ENGINEER — Chi Mark Chen — No. C 40582 — Exp. 03/31/09 — CIVIL — STATE OF CALIFORNIA

The State of California or its officers or agents shall not be responsible for the accuracy or completeness of electronic copies of this plan sheet.

T.Y. LIN / MOFFATT & NICHOL
Two Harrison Street, Suite 500
San Francisco, CA 94105

100% PS&E

FILE => P:\BB\04-012001\ETI\100% Submittal\aebnt02.dgn
TIME PLOTTED => 1:04:38 PM
DATE PLOTTED => 11/4/2007
USERNAME => ALee

ALL DIMENSIONS ARE IN MILLIMETERS UNLESS OTHERWISE SHOWN

SAN FRANCISCO OAKLAND BAY BRIDGE
EAST SPAN SEISMIC SAFETY PROJECT

EAST TIE-IN

BENT CAP DETAILS NO. 2

T. Ostrom/M. Whiteside/A. Akinsanya — DESIGN OVERSIGHT			
SIGN OFF DATE			
DESIGN	BY M. Chen/R. Nutt	CHECKED A. Pan	PREPARED FOR THE STATE OF CALIFORNIA DEPARTMENT OF TRANSPORTATION
DETAILS	BY S. Lee	CHECKED A. Pan	
QUANTITIES	BY H. Nelson	CHECKED A. Lee	
M. Sah — PROJECT ENGINEER			
S. Abbas — PROJECT MANAGER			
CU EA 0120R4			

BRIDGE NO. 34-0006 (TEMP)
KILOMETER POST 12.6

DISREGARD PRINTS BEARING EARLIER REVISION DATES →

REVISION DATES (PRELIMINARY STAGE ONLY): 11/5/07

SHEET 9 OF 214

DESIGN DETAIL SHEET (METRIC) (REV. 3/1/98)
◊DATE◊ ◊TIME◊ Pen Table File

ORIGINAL SCALE IN MILLIMETERS FOR REDUCED PLANS 0 10 20 30 40 50 60 70 80 90 100

FILE => P:\BB\04-012001\ETI\100% Submittal\aebnt02.dgn

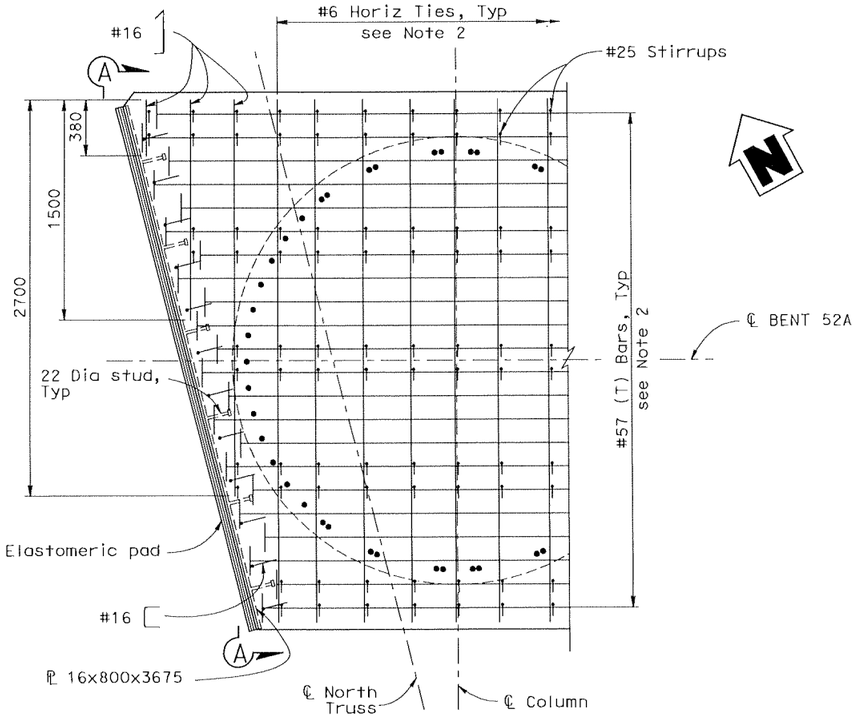

PLAN

1:20

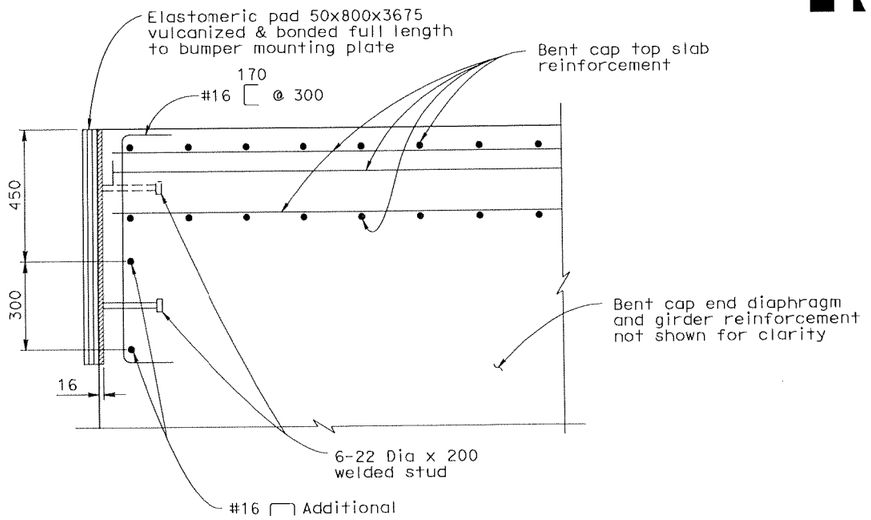

SECTION B-B

1:10

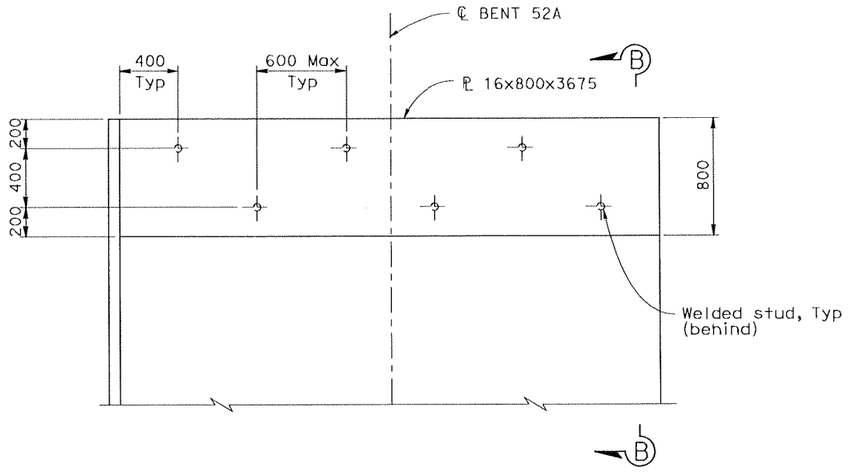

SECTION A-A BUMPER MOUNTING PLATE

1:20

DIST	COUNTY	ROUTE	KILOMETER POST TOTAL PROJECT	SHEET No	TOTAL
04	SF	80	12.6/13.2	10	214

Caltrans Metric

Mark Chen
REGISTERED CIVIL ENGINEER

11-5-07
PLANS APPROVAL DATE

REGISTERED PROFESSIONAL ENGINEER — Chi Mark Chen — No. C 40582 — Exp. 03/31/09 — CIVIL — STATE OF CALIFORNIA

The State of California or its officers or agents shall not be responsible for the accuracy or completeness of electronic copies of this plan sheet.

T.Y. LIN / MOFFATT & NICHOL
Two Harrison Street, Suite 500
San Francisco, CA 94105

CONTRACT NO. 04-0120R4

CONTRACT CHANGE ORDER NO 90

SHEET 202 OF 227

Notes:

1. The Contractor shall verify all controlling field dimensions before ordering or fabricating any material.
2. For Bent Cap reinforcements not shown, see "Bent Cap Details No. 1" sheet.

ALL DIMENSIONS ARE IN MILLIMETERS UNLESS OTHERWISE SHOWN

SAN FRANCISCO OAKLAND BAY BRIDGE
EAST SPAN SEISMIC SAFETY PROJECT

EAST TIE-IN

BENT CAP DETAILS NO. 3

DESIGN	BY M. Chen/R. Nutt	CHECKED A. Pan	
DETAILS	BY S. Lee	CHECKED A. Pan	
QUANTITIES	BY H. Nelson	CHECKED A. Lee	

T. Ostrom/M. Whiteside/A. Akinsanya
DESIGN OVERSIGHT

SIGN OFF DATE

PREPARED FOR THE STATE OF CALIFORNIA DEPARTMENT OF TRANSPORTATION

M. Sah
PROJECT ENGINEER
S. Abbas
PROJECT MANAGER

BRIDGE NO. 34-0006 (TEMP)
KILOMETER POST 12.6

CU
EA 0120R4

DISREGARD PRINTS BEARING EARLIER REVISION DATES

REVISION DATES (PRELIMINARY STAGE ONLY): 11/5/07

SHEET 10 OF 214

DESIGN DETAIL SHEET (METRIC) (REV. 3/1/98)
@DATE@ @TIME@ Pen Table File

ORIGINAL SCALE IN MILLIMETERS FOR REDUCED PLANS 0 10 20 30 40 50 60 70 80 90 100

FILE => P:\BB\04-012001\ETI\100% Submittal\aebnt03.dgn

100% PS&E

DATE PLOTTED => 11/4/2007
TIME PLOTTED => 1:06:16 PM
FILE => P:\BB\04-012001\ETI\100% Submittal\aebnt03.dgn
USERNAME => Alee

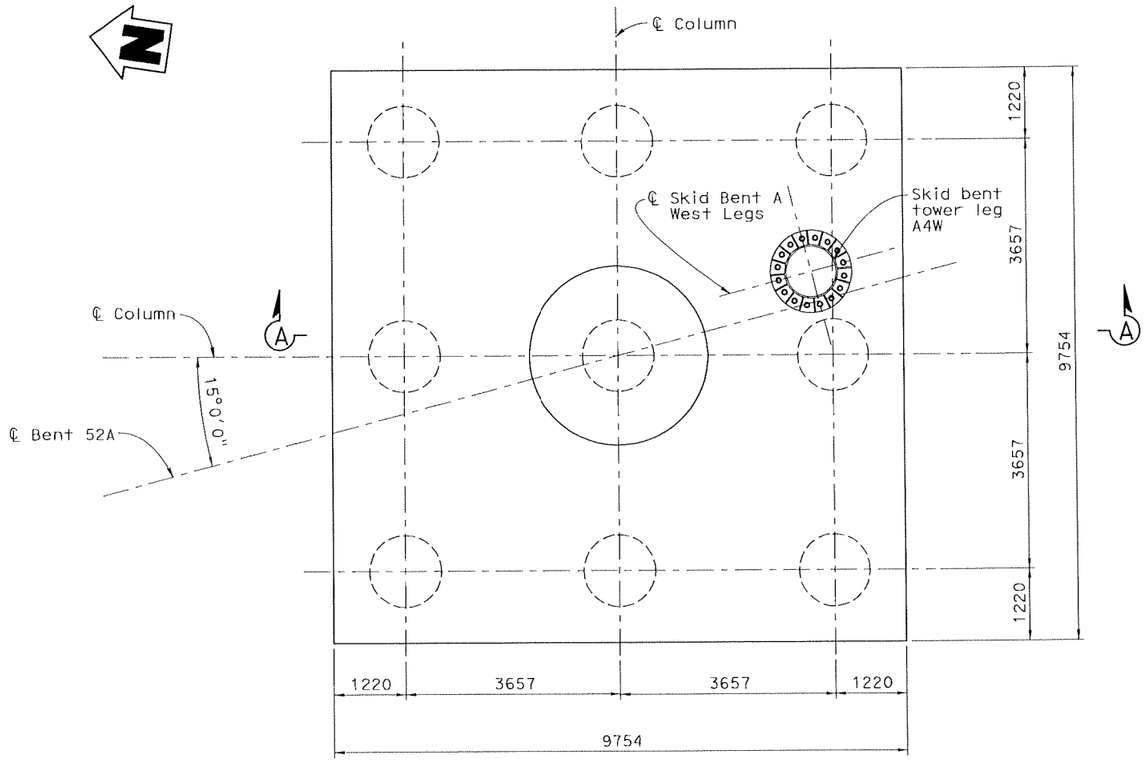

FOOTING PLAN - BENT 52A NORTH

1:50

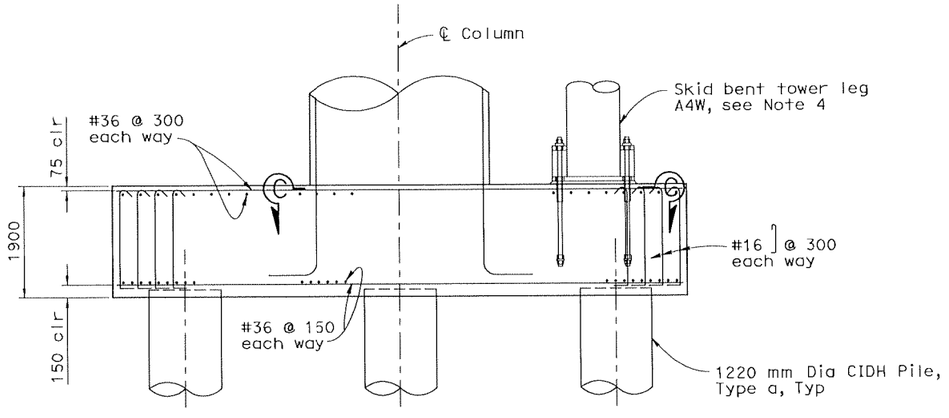

SECTION A-A

1:50

Reinforcing bars not all shown

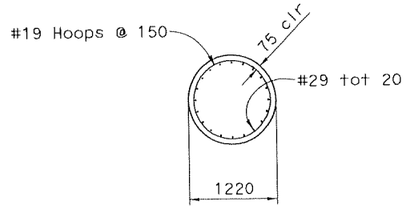

SECTION B-B

1:40

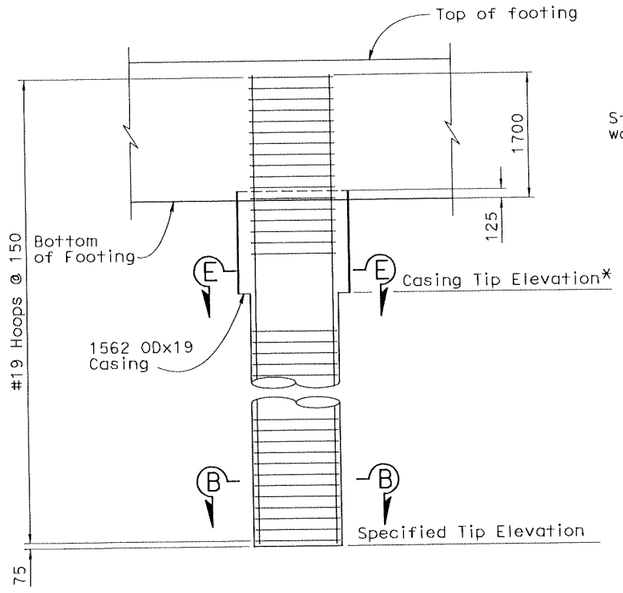

1220 mm Dia CIDH PILE TYPE a

1:40

Reinforcing bars in footing not shown

* 1562 OD casing at Bent 52A south footing only

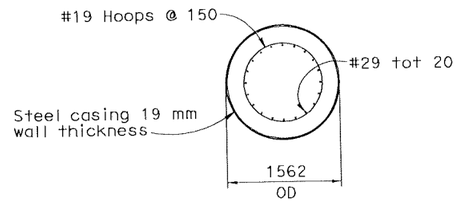

SECTION E-E

1:40

LEGEND:

◯ Indicates 1220 mm Dia CIDH Pile

Notes:

1. Adjust footing reinforcement to clear column and CIDH pile longitudinal reinforcement.
2. For Section C-C, see "Bent 52A Footing Details No. 2" sheet
3. Contractor shall verify all controlling field dimensions before ordering or fabricating any material.
4. For skid bent tower leg base connection, see detail 1 on "Skid Bent Footing Details No. 2" sheet.

CONTRACT NO. 04-0120R4

CONTRACT CHANGE ORDER NO 90

SHEET 203 OF 277

ALL DIMENSIONS ARE IN MILLIMETERS UNLESS OTHERWISE SHOWN

DIST	COUNTY	ROUTE	KILOMETER POST TOTAL PROJECT	SHEET No	TOTAL
04	SF	80	12.6/13.2	12	214

Caltrans Metric

Mark Chen
REGISTERED CIVIL ENGINEER

11-5-07
PLANS APPROVAL DATE

REGISTERED PROFESSIONAL ENGINEER — Chi Mark Chen — No. C 40582 — Exp. 03/31/09 — CIVIL — STATE OF CALIFORNIA

The State of California or its officers or agents shall not be responsible for the accuracy or completeness of electronic copies of this plan sheet.

T.Y.LIN / MOFFATT & NICHOL
Two Harrison Street, Suite 500
San Francisco, CA 94105

100% PS&E

FILE => P:\BB\04-012001\ETI\100% Submittal\aeftg01.dgn
TIME PLOTTED => 1:06:26 PM
DATE PLOTTED => 11/4/2007
USERNAME => ALee

T. Ostrom/M. Whiteside/A. Akinsanya
DESIGN OVERSIGHT

SIGN OFF DATE

	BY	CHECKED
DESIGN	M. Chen/R. Nutt	A. Pan
DETAILS	S. Lee	A. Pan
QUANTITIES	H. Nelson	A. Lee

PREPARED FOR THE STATE OF CALIFORNIA
DEPARTMENT OF TRANSPORTATION

M. Sah
PROJECT ENGINEER
S. Abbas
PROJECT MANAGER

BRIDGE NO. 34-0006 (TEMP)
KILOMETER POST 12.6

SAN FRANCISCO OAKLAND BAY BRIDGE
EAST SPAN SEISMIC SAFETY PROJECT

EAST TIE-IN

BENT 52A FOOTING DETAILS NO. 1

DESIGN DETAIL SHEET (METRIC) (REV. 3/1/98)
@DATE@ @TIME@ Pen Table File

ORIGINAL SCALE IN MILLIMETERS FOR REDUCED PLANS 0 10 20 30 40 50 60 70 80 90 100

CU
EA 0120R4

DISREGARD PRINTS BEARING EARLIER REVISION DATES →

REVISION DATES (PRELIMINARY STAGE ONLY): 4/18/07 11/5/07

SHEET 12 OF 214

FILE => P:\BB\04-012001\ETI\100% Submittal\aeftg01.dgn

DIST	COUNTY	ROUTE	KILOMETER POST TOTAL PROJECT	SHEET No	TOTAL
04	SF	80	12.6/13.2	13	214

Caltrans Metric

Mark Chen
REGISTERED CIVIL ENGINEER

11-5-07
PLANS APPROVAL DATE

REGISTERED PROFESSIONAL ENGINEER
Chi Mark Chen
No. C 40582
Exp. 03/31/09
CIVIL
STATE OF CALIFORNIA

The State of California or its officers or agents shall not be responsible for the accuracy or completeness of electronic copies of this plan sheet.

T.Y. LIN / MOFFATT & NICHOL
Two Harrison Street, Suite 500
San Francisco, CA 94105

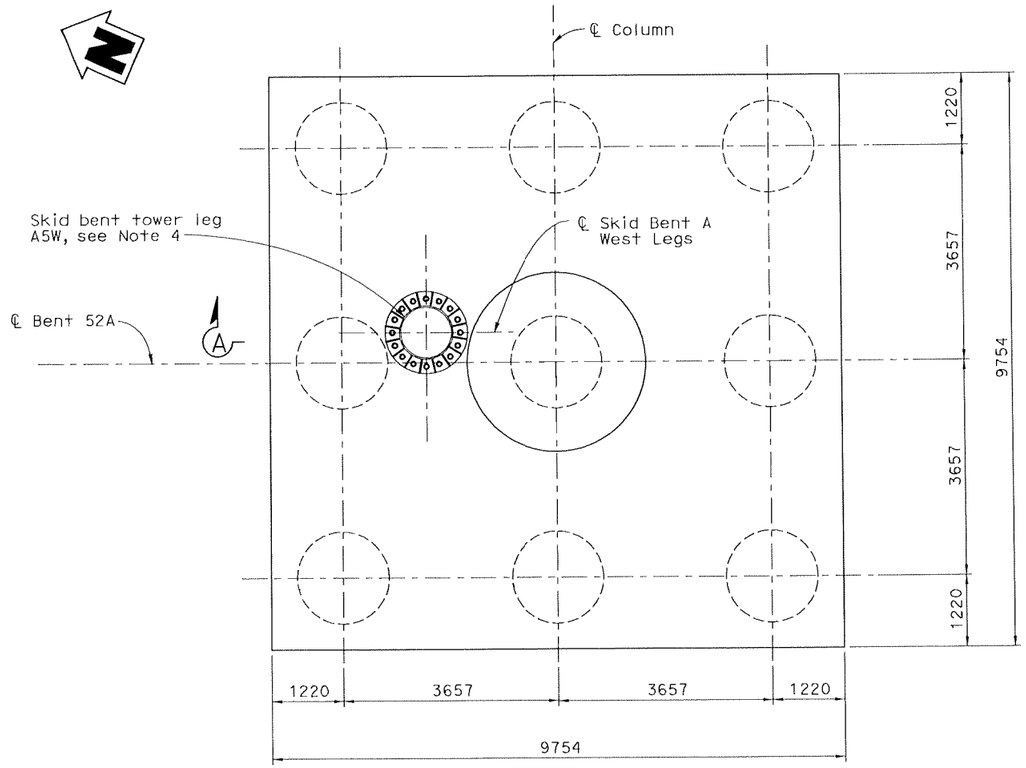

FOOTING PLAN - BENT 52A SOUTH
1:50

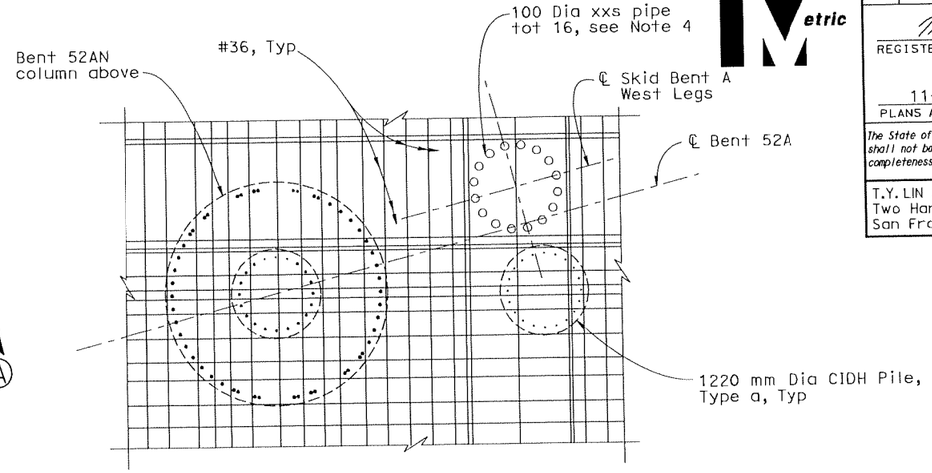

SECTION C-C
1:40

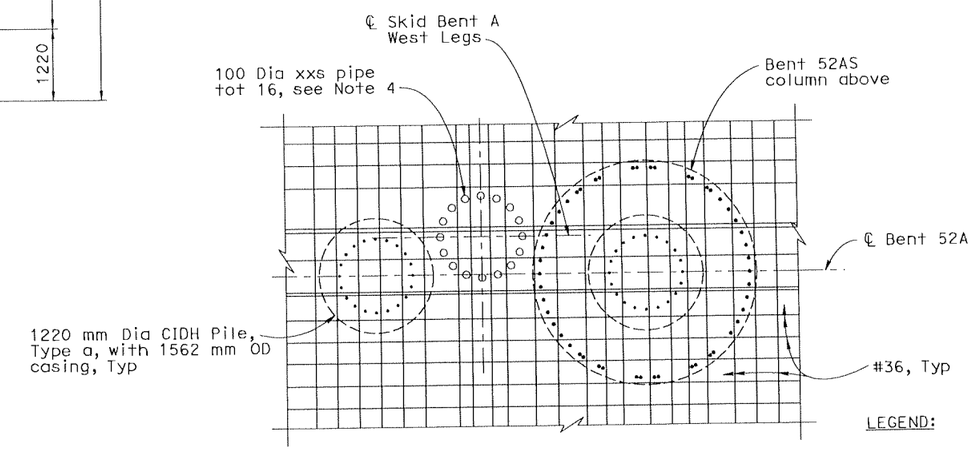

SECTION D-D
1:40

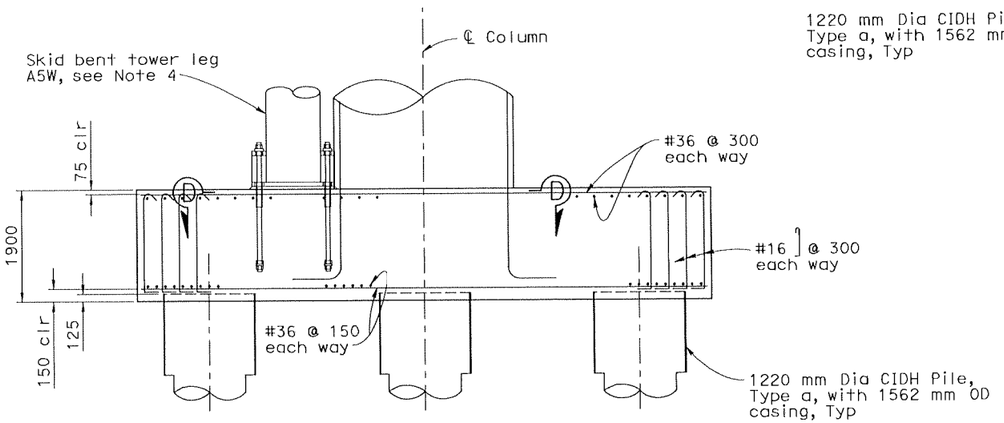

SECTION A-A
1:50
Reinforcing bars not all shown

CONTRACT NO. 04-012024
CONTRACT CHANGE ORDER NO 90
SHEET 204 OF 207

100% PS&E

LEGEND:

Indicates 1220 mm Dia CIDH Pile with 1562 mm OD permanent steel casing

Notes:

1. Adjust footing reinforcement to clear column and CIDH pile longitudinal reinforcement.
2. For CIDH pile Type a details, see "Bent 52A footing Details No. 1" sheet.
3. Contractor shall verify all controlling field dimensions before ordering or fabricating any material.
4. For skid bent tower leg base connection, see detail 1 on "Skid Bent Footing Details No. 2" sheet.

ALL DIMENSIONS ARE IN MILLIMETERS UNLESS OTHERWISE SHOWN

SAN FRANCISCO OAKLAND BAY BRIDGE
EAST SPAN SEISMIC SAFETY PROJECT

EAST TIE-IN

BENT 52A FOOTING DETAILS NO. 2

T. Ostrom/M. Whiteside/A. Akinsanya
DESIGN OVERSIGHT

SIGN OFF DATE

	BY	CHECKED
DESIGN	M. Chen/R. Nutt	A. Pan
DETAILS	S. Lee	A. Pan
QUANTITIES	H. Nelson	A. Lee

PREPARED FOR THE STATE OF CALIFORNIA DEPARTMENT OF TRANSPORTATION

M. Sah
PROJECT ENGINEER
S. Abbas
PROJECT MANAGER

BRIDGE NO. 34-0006 (TEMP)
KILOMETER POST 12.6

DISREGARD PRINTS BEARING EARLIER REVISION DATES 11/5/07

REVISION DATES (PRELIMINARY STAGE ONLY)

SHEET 13 OF 214

DESIGN DETAIL SHEET (METRIC) (REV. 3/1/98)
@DATE@ @TIME@ Pen Table File

ORIGINAL SCALE IN MILLIMETERS FOR REDUCED PLANS 0 10 20 30 40 50 60 70 80 90 100

FILE => P:\BB\04-012001\ETI\100% Submittal\aeftg05.dgn

USERNAME => ALee DATE PLOTTED => 11/4/2007 TIME PLOTTED => 1:09:03 PM FILE => P:\BB\04-012001\ETI\100% Submittal\aeftg05.dgn

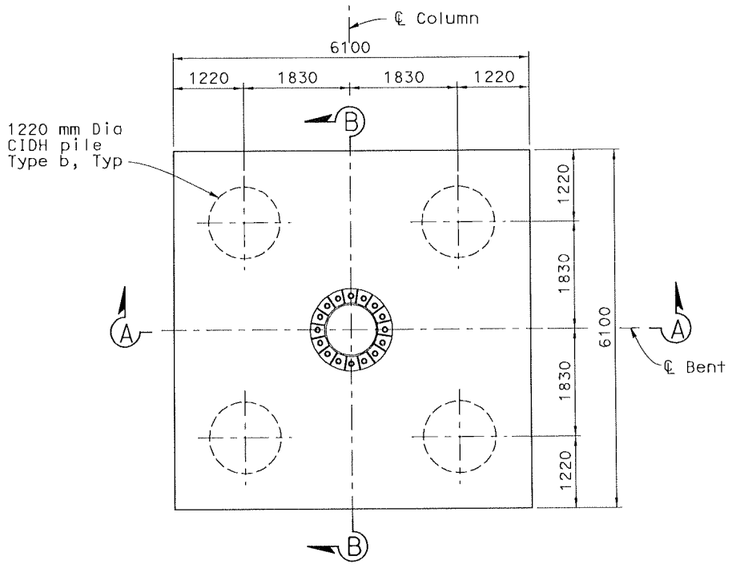

PLAN - SKID BENT FOOTING TYPE 1

1:50

Skid Bent A : Footings A1W, A1E, A2W, A2E
Skid Bent B : Footings B1W, B1E, B2E

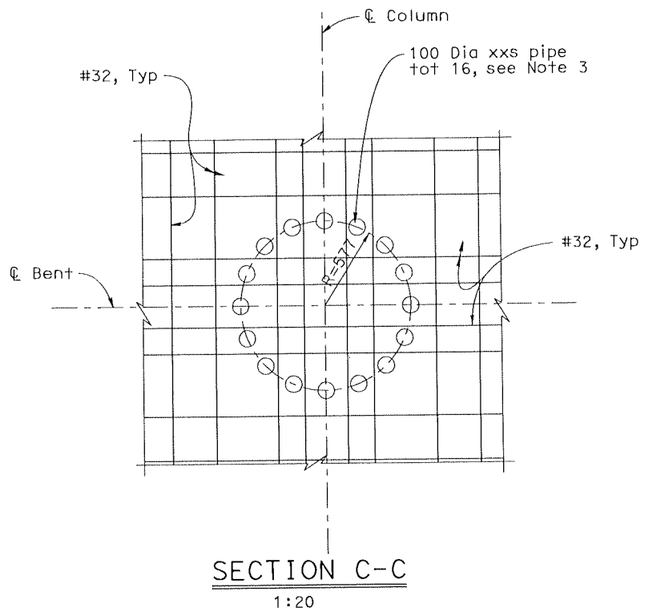

SECTION C-C

1:20

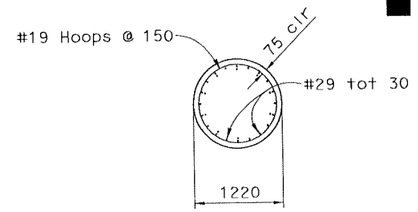

SECTION D-D

1:40

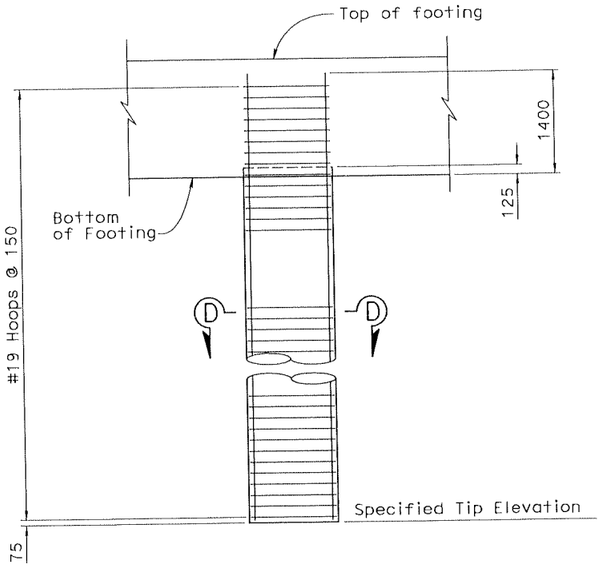

1220 mm Dia CIDH PILE TYPE b

1:40

Reinforcing bars in footing not shown

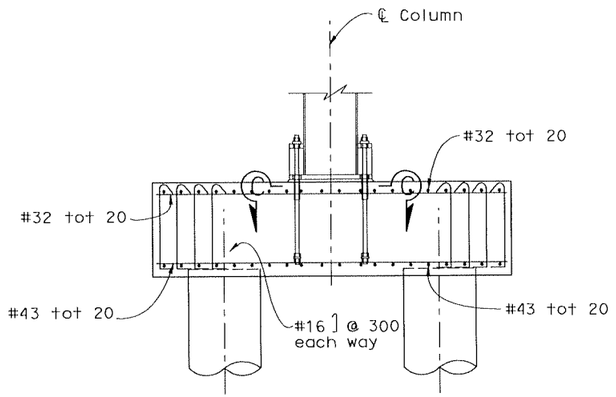

SECTION A-A

1:50

Reinforcing bars not all shown

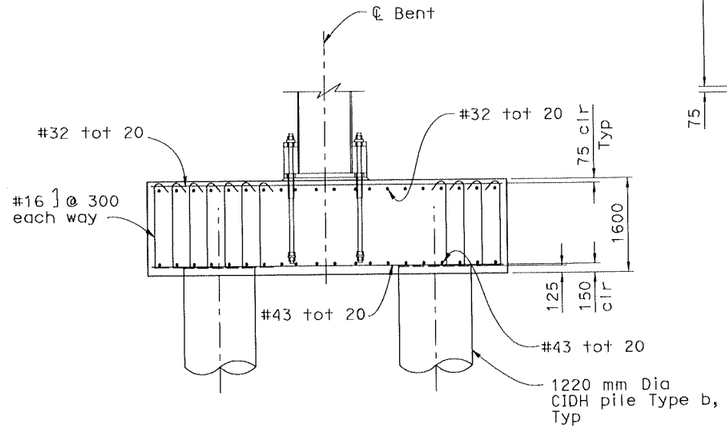

SECTION B-B

1:50

Reinforcing bars not all shown

ALL DIMENSIONS ARE IN MILLIMETERS UNLESS OTHERWISE SHOWN

LEGEND:

Indicates 1220 mm Dia CIDH Pile

Notes:

1. Adjust footing reinforcement to clear column anchor rods and CIDH pile longitudinal reinforcement.
2. Contractor shall verify all controlling field dimensions before ordering or fabricating any material.
3. For skid bent tower leg base connection, see Detail 1 on "Skid Bent Footing Details No. 2" sheet.

DIST	COUNTY	ROUTE	KILOMETER POST TOTAL PROJECT	SHEET No	TOTAL
04	SF	80	12.6/13.2	14	214

Caltrans Metric

Mark Chen
REGISTERED CIVIL ENGINEER

11-5-07
PLANS APPROVAL DATE

REGISTERED PROFESSIONAL ENGINEER — Chi Mark Chen — No. C 40582 — Exp. 03/31/09 — CIVIL — STATE OF CALIFORNIA

The State of California or its officers or agents shall not be responsible for the accuracy or completeness of electronic copies of this plan sheet.

T.Y. LIN / MOFFATT & NICHOL
Two Harrison Street, Suite 500
San Francisco, CA 94105

100% PS&E

CONTRACT NO. 04-0120R4

CONTRACT CHANGE ORDER NO. 90

SHEET 205 OF 222

FILE => P:\BB\04-012001\ETI\100% Submittal\aeftg02.dgn
DATE PLOTTED => 11/4/2007
TIME PLOTTED => 1:07:03 PM
USERNAME => ALee

T. Ostrom/M. Whiteside/A. Akinsanya
DESIGN OVERSIGHT

SIGN OFF DATE

DESIGN DETAIL SHEET (METRIC) (REV. 3/1/98)
©DATE© ©TIME© Pen Table File

	BY	CHECKED
DESIGN	M. Chen/R. Nutt	A. Pan
DETAILS	S. Lee	A. Pan
QUANTITIES	H. Nelson	A. Lee

ORIGINAL SCALE IN MILLIMETERS FOR REDUCED PLANS 0 10 20 30 40 50 60 70 80 90 100

PREPARED FOR THE STATE OF CALIFORNIA DEPARTMENT OF TRANSPORTATION

M. Sah
PROJECT ENGINEER
S. Abbas
PROJECT MANAGER

CU
EA 0120R4

FILE => P:\BB\04-012001\ETI\100% Submittal\aeftg02.dgn

BRIDGE NO. 34-0006 (TEMP)
KILOMETER POST 12.6

DISREGARD PRINTS BEARING EARLIER REVISION DATES →

REVISION DATES (PRELIMINARY STAGE ONLY): 4/30/07 | 11/5/07

SAN FRANCISCO OAKLAND BAY BRIDGE
EAST SPAN SEISMIC SAFETY PROJECT

EAST TIE-IN

SKID BENT FOOTING DETAILS NO. 1

SHEET 14 OF 214

DIST	COUNTY	ROUTE	KILOMETER POST TOTAL PROJECT	SHEET No	TOTAL
04	SF	80	12.6/13.2	15	214

Caltrans Metric

Mark Chen
REGISTERED CIVIL ENGINEER

11-5-07
PLANS APPROVAL DATE

REGISTERED PROFESSIONAL ENGINEER
Chi Mark Chen
No. C 40582
Exp. 03/31/09
CIVIL
STATE OF CALIFORNIA

The State of California or its officers or agents shall not be responsible for the accuracy or completeness of electronic copies of this plan sheet.

T.Y. LIN / MOFFATT & NICHOL
Two Harrison Street, Suite 500
San Francisco, CA 94105

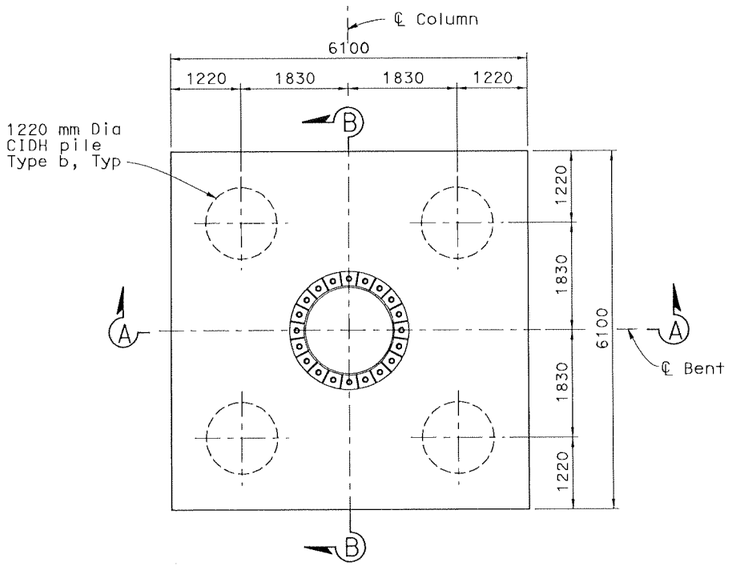

PLAN - SKID BENT FOOTING TYPE 2

1:50

Skid Bent A : Footings A3W, A3E
Skid Bent B : Footings B3E

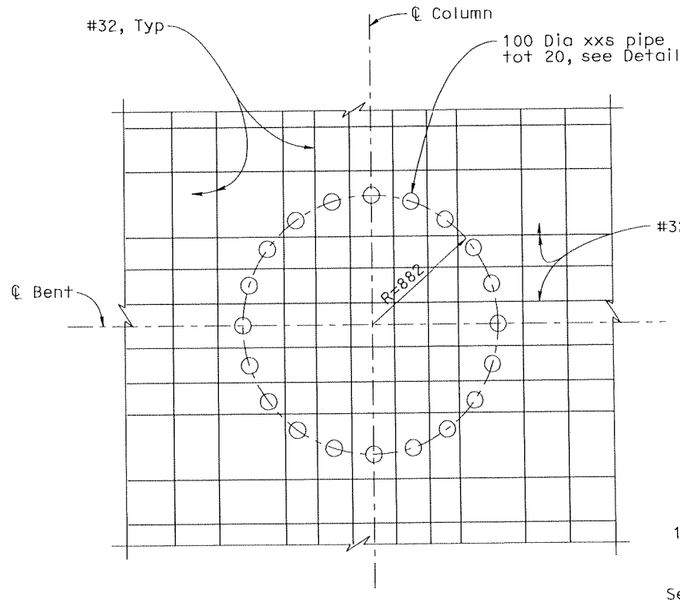

SECTION C-C

1:20

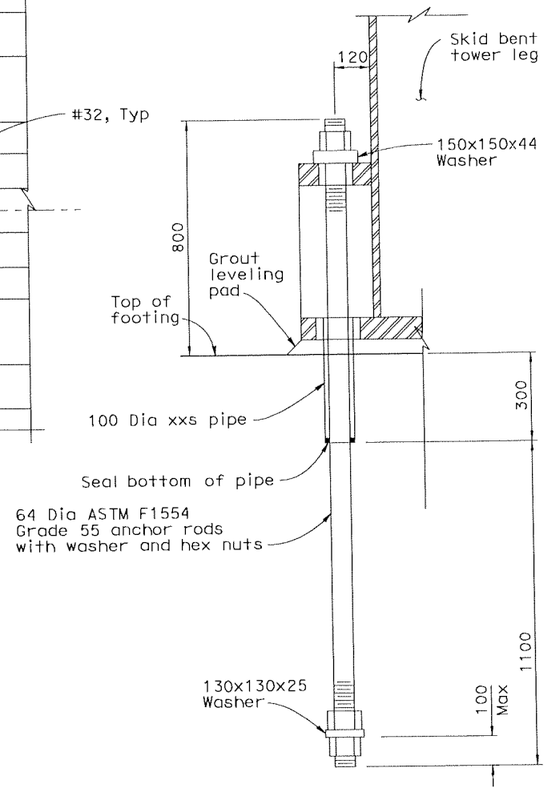

DETAIL 1

1:10

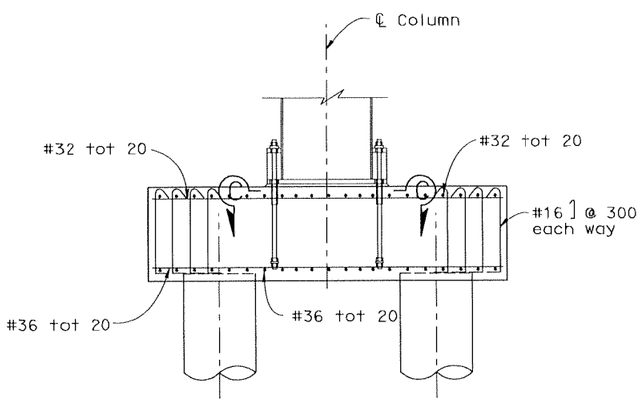

SECTION A-A

1:50

Reinforcing bars not all shown

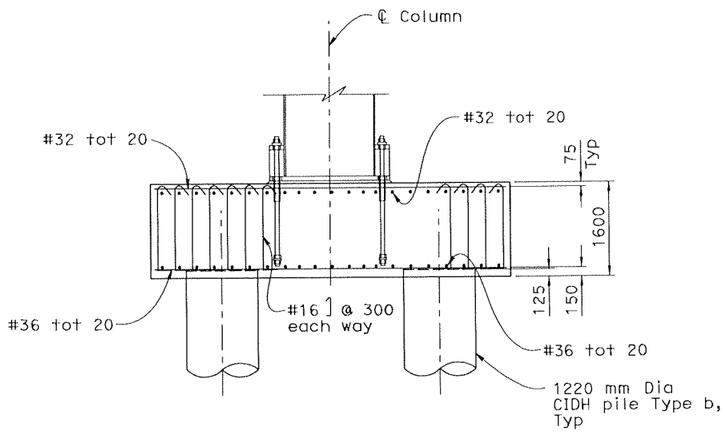

SECTION B-B

1:50

Reinforcing bars not all shown

LEGEND:

◯ Indicates 1220 mm Dia CIDH Pile

Notes:

1. Adjust footing reinforcement to clear column rods and CIDH pile longitudinal reinforcement.
2. For CIDH pile Type b details, see "Skid Bent Footing Details No. 1" sheet.
3. Contractor shall verify all controlling field dimensions before ordering or fabricating any material.

CONTRACT NO. 04-012OR4
CONTRACT CHANGE ORDER NO 90
SHEET 206 OF 272

100% PS&E

ALL DIMENSIONS ARE IN MILLIMETERS UNLESS OTHERWISE SHOWN

SAN FRANCISCO OAKLAND BAY BRIDGE
EAST SPAN SEISMIC SAFETY PROJECT

EAST TIE-IN

SKID BENT FOOTING DETAILS NO. 2

T. Ostrom/M. Whiteside/A. Akinsanya
DESIGN OVERSIGHT

SIGN OFF DATE

	BY	CHECKED
DESIGN	M. Chen/R. Nutt	A. Pan
DETAILS	S. Lee	A. Pan
QUANTITIES	H. Nelson	A. Lee

PREPARED FOR THE
STATE OF CALIFORNIA
DEPARTMENT OF TRANSPORTATION

M. Sah
PROJECT ENGINEER
S. Abbas
PROJECT MANAGER

BRIDGE NO. 34-0006 (TEMP)
KILOMETER POST 12.6

DISREGARD PRINTS BEARING EARLIER REVISION DATES 11/5/07

REVISION DATES (PRELIMINARY STAGE ONLY)

SHEET 15 OF 214

DESIGN DETAIL SHEET (METRIC) (REV. 3/1/98)
@DATE@ @TIME@ Pen Table File

ORIGINAL SCALE IN MILLIMETERS FOR REDUCED PLANS 0 10 20 30 40 50 60 70 80 90 100

FILE => P:\BB\04-012001\ETI\100% Submittal\aeftg07.dgn

USERNAME => ALee DATE PLOTTED => 11/4/2007 TIME PLOTTED => 1:10:07 PM FILE => P:\BB\04-012001\ETI\100% Submittal\aeftg07.dgn

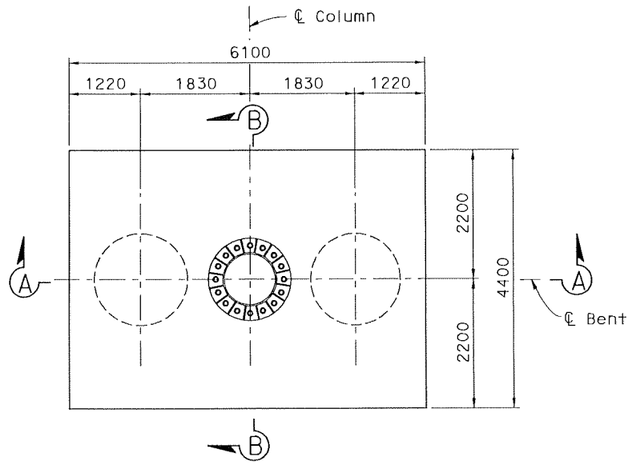

PLAN - SKID BENT FOOTING TYPE 3

1:50

Skid Bent A : Footings A4E, A5E
Skid Bent B : Footings B4W, B4E, B5W, B5E

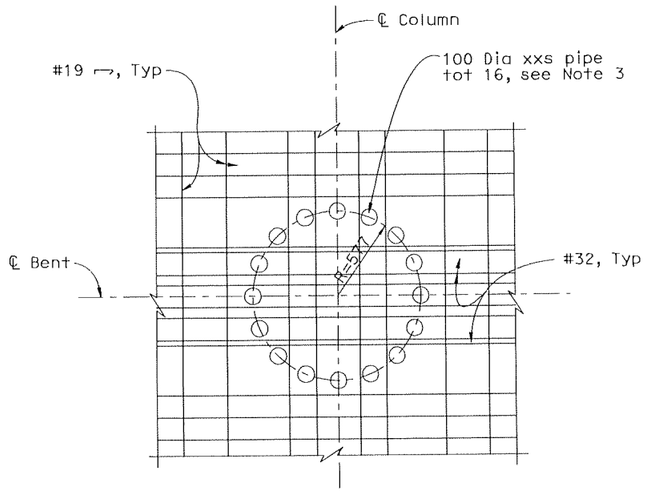

SECTION C-C

1:20

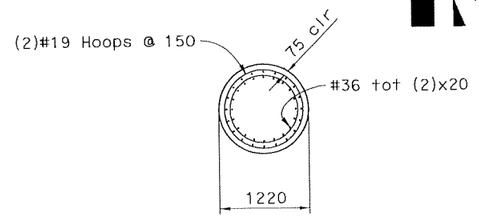

SECTION D-D

1:40

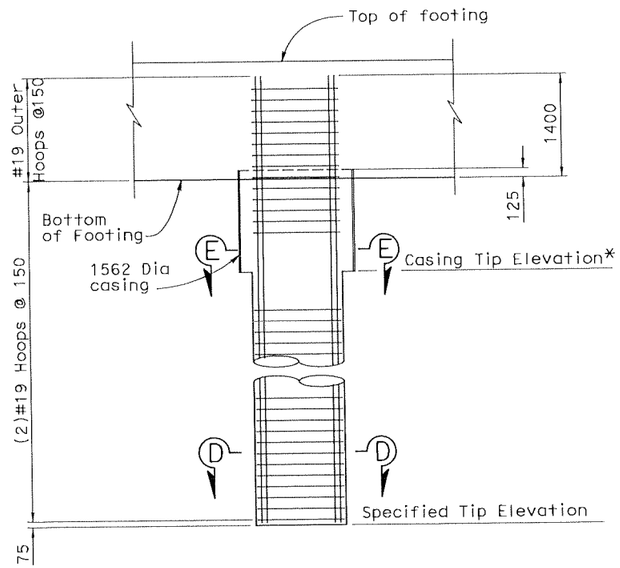

1220 mm Dia CIDH PILE TYPE c

1:40

Reinforcing bars in footing not shown
* 1562 OD casing at Skid Bent footings A4E, A5E, A6W, A6E,B5W,B5E,B6W,B6E only

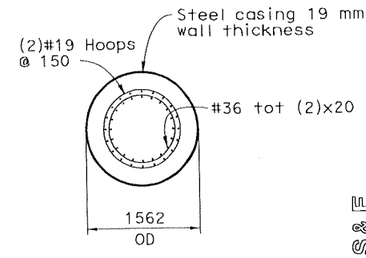

SECTION E-E

1:40

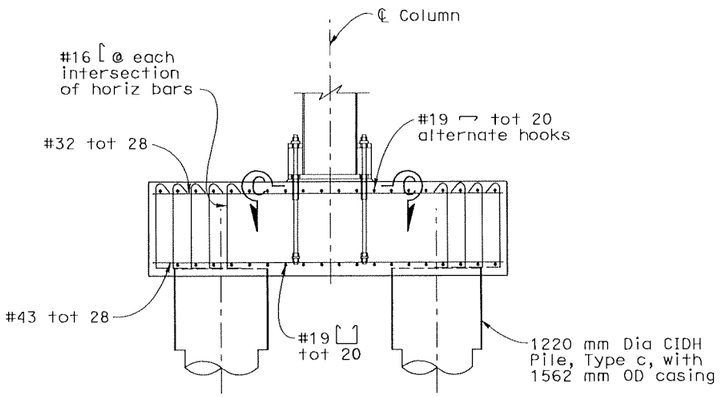

SECTION A-A

1:50

Reinforcing bars not all shown

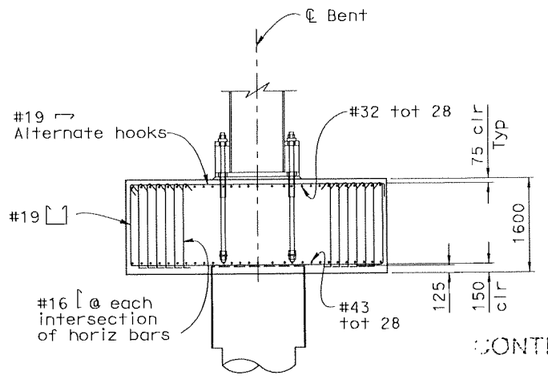

SECTION B-B

1:50

Reinforcing bars not all shown

LEGEND:

◯ Indicates 1220 mm Dia CIDH Pile with 1562 mm OD permanent steel casing as noted

Notes:

1. Adjust footing reinforcement to clear column anchor rods and CIDH pile longitudinal reinforcement.
2. Contractor shall verify all controlling field dimensions before ordering or fabricating any material.
3. For skid bent tower leg base connection, see Detail 1 on "Skid Bent Footing Details No. 2" sheet.

CONTRACT NO. 04-0120R4

CONTRACT CHANGE ORDER NO 90

SHEET 207 OF 227

ALL DIMENSIONS ARE IN MILLIMETERS UNLESS OTHERWISE SHOWN

DIST	COUNTY	ROUTE	KILOMETER POST TOTAL PROJECT	SHEET No	TOTAL
04	SF	80	12.6/13.2	16	214

Caltrans Metric

Mark Chen
REGISTERED CIVIL ENGINEER

11-5-07
PLANS APPROVAL DATE

REGISTERED PROFESSIONAL ENGINEER — Chi Mark Chen — No. C 40582 — Exp. 03/31/09 — CIVIL — STATE OF CALIFORNIA

The State of California or its officers or agents shall not be responsible for the accuracy or completeness of electronic copies of this plan sheet.

T.Y. LIN / MOFFATT & NICHOL
Two Harrison Street, Suite 500
San Francisco, CA 94105

100% PS&E

FILE => P:\BB\04-012001\ETI\100% Submittal\aeftg06.dgn
TIME PLOTTED => 1:09:30 PM
DATE PLOTTED => 11/4/2007
USERNAME => ALee

T. Ostrom/M. Whiteside/A. Akinsanya DESIGN OVERSIGHT			
SIGN OFF DATE			
DESIGN DETAIL SHEET (METRIC) (REV. 3/1/98) ©DATE© ©TIME© Pen Table File			

DESIGN	BY M. Chen/R. Nutt	CHECKED	A. Pan
DETAILS	BY S. Lee	CHECKED	A. Pan
QUANTITIES	BY H. Nelson	CHECKED	A. Lee

ORIGINAL SCALE IN MILLIMETERS FOR REDUCED PLANS 0 10 20 30 40 50 60 70 80 90 100

PREPARED FOR THE STATE OF CALIFORNIA DEPARTMENT OF TRANSPORTATION

M. Sah — PROJECT ENGINEER
S. Abbas — PROJECT MANAGER

CU
EA 0120R4

BRIDGE NO. 34-0006 (TEMP)
KILOMETER POST 12.6

DISREGARD PRINTS BEARING EARLIER REVISION DATES →

REVISION DATES (PRELIMINARY STAGE ONLY): 11/5/07

SAN FRANCISCO OAKLAND BAY BRIDGE
EAST SPAN SEISMIC SAFETY PROJECT

EAST TIE-IN

SKID BENT FOOTING DETAILS NO. 3

SHEET 16 OF 214

FILE => P:\BB\04-012001\ETI\100% Submittal\aeftg06.dgn

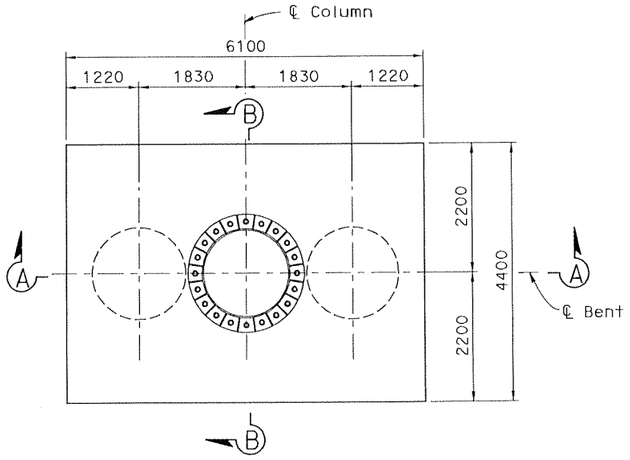

PLAN - SKID BENT FOOTING TYPE 4

1:50

Skid Bent A : Footings A6W, A6E
Skid Bent B : Footings B6W, B6E

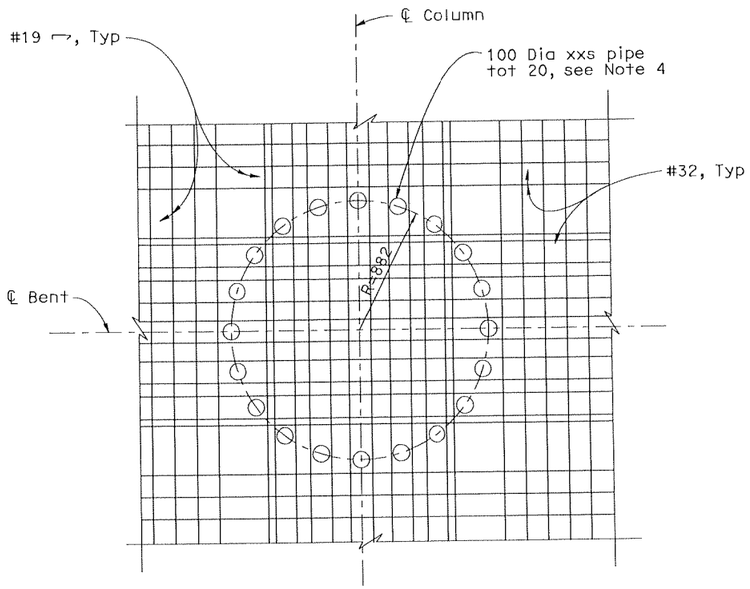

SECTION C-C

1:20

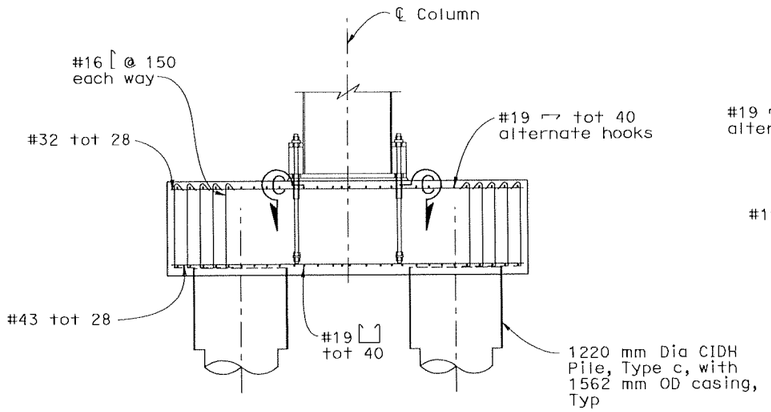

SECTION A-A

1:50

Reinforcing bars not all shown

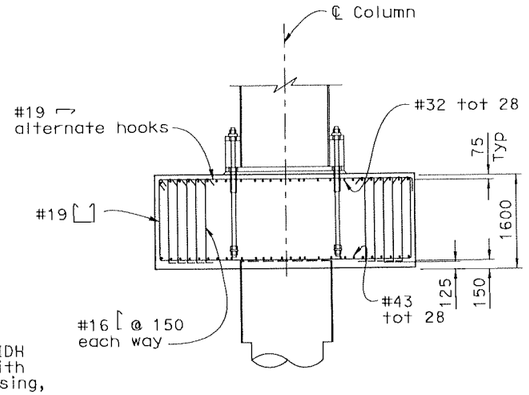

SECTION B-B

1:50

Reinforcing bars not all shown

ALL DIMENSIONS ARE IN MILLIMETERS UNLESS OTHERWISE SHOWN

DIST	COUNTY	ROUTE	KILOMETER POST TOTAL PROJECT	SHEET NO	TOTAL
04	SF	80	12.6/13.2	17	214

Caltrans Metric

Mark Chen
REGISTERED CIVIL ENGINEER

11-5-07
PLANS APPROVAL DATE

REGISTERED PROFESSIONAL ENGINEER — Chi Mark Chen — No. C 40582 — Exp. 03/31/09 — CIVIL — STATE OF CALIFORNIA

The State of California or its officers or agents shall not be responsible for the accuracy or completeness of electronic copies of this plan sheet.

T.Y. LIN / MOFFATT & NICHOL
Two Harrison Street, Suite 500
San Francisco, CA 94105

CONTRACT NO. 04-0120R4

CONTRACT CHANGE ORDER NO 90

SHEET 208 OF 227

LEGEND:

Indicates 1220 mm Dia CIDH Pile with 1562 mm OD permanent steel casing as noted

Notes:

1. Adjust footing reinforcements to clear column anchor rods and CIDH pile longitudinal reinforcements.
2. For CIDH pile Type c details, see "Skid Bent Footing Details No. 3" sheet.
3. Contractor shall verify all controlling field dimensions before ordering or fabricating any material.
4. For skid bent tower leg base connection, see Detail 1 on "Skid Bent Footing Details No. 2" sheet.

100% PS&E

FILE => P:\BB\04-012001\ETI\100% Submittal\aeftg08.dgn
TIME PLOTTED => 1:10:47 PM
DATE PLOTTED => 11/4/2007
USERNAME => Alee

DESIGN	BY M. Chen/R. Nutt	CHECKED A. Pan	
DETAILS	BY S. Lee	CHECKED A. Pan	
QUANTITIES	BY H. Nelson	CHECKED A. Lee	

T. Ostrom/M. Whiteside/A. Akinsanya
DESIGN OVERSIGHT

SIGN OFF DATE

PREPARED FOR THE STATE OF CALIFORNIA
DEPARTMENT OF TRANSPORTATION

M. Sah
PROJECT ENGINEER
S. Abbas
PROJECT MANAGER

CU
EA 0120R4

BRIDGE NO. 34-0006 (TEMP)
KILOMETER POST 12.6

DISREGARD PRINTS BEARING EARLIER REVISION DATES →

REVISION DATES (PRELIMINARY STAGE ONLY): 11/5/07

SAN FRANCISCO OAKLAND BAY BRIDGE
EAST SPAN SEISMIC SAFETY PROJECT

EAST TIE-IN

SKID BENT FOOTING DETAILS NO. 4

SHEET 17 OF 214

DESIGN DETAIL SHEET (METRIC) (REV. 3/1/98)
@DATE@ @TIME@ Pen Table File

ORIGINAL SCALE IN MILLIMETERS FOR REDUCED PLANS 0 10 20 30 40 50 60 70 80 90 100

FILE => P:\BB\04-012001\ETI\100% Submittal\aeftg08.dgn

DIST	COUNTY	ROUTE	KILOMETER POST TOTAL PROJECT	SHEET No	TOTAL
04	SF	80	12.6/13.2	18	214

Caltrans Metric

Mark Chen
REGISTERED CIVIL ENGINEER

11-5-07
PLANS APPROVAL DATE

REGISTERED PROFESSIONAL ENGINEER — Chi Mark Chen — No. C 40582 — Exp. 03/31/09 — CIVIL — STATE OF CALIFORNIA

The State of California or its officers or agents shall not be responsible for the accuracy or completeness of electronic copies of this plan sheet.

T.Y. LIN / MOFFATT & NICHOL
Two Harrison Street, Suite 500
San Francisco, CA 94105

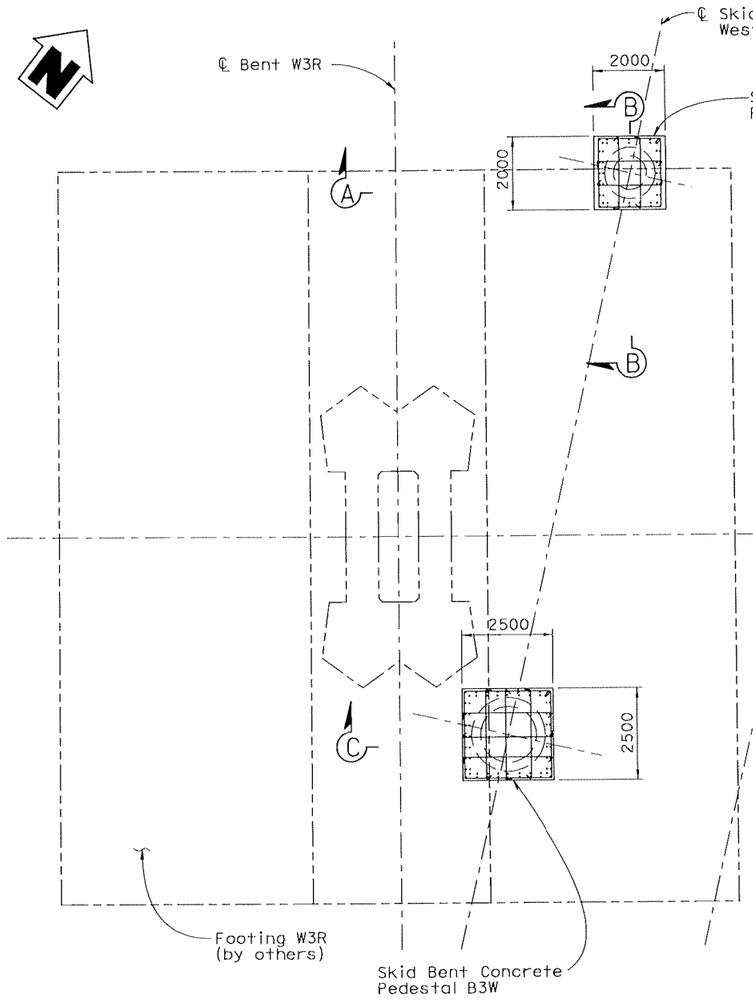

PLAN
1:80

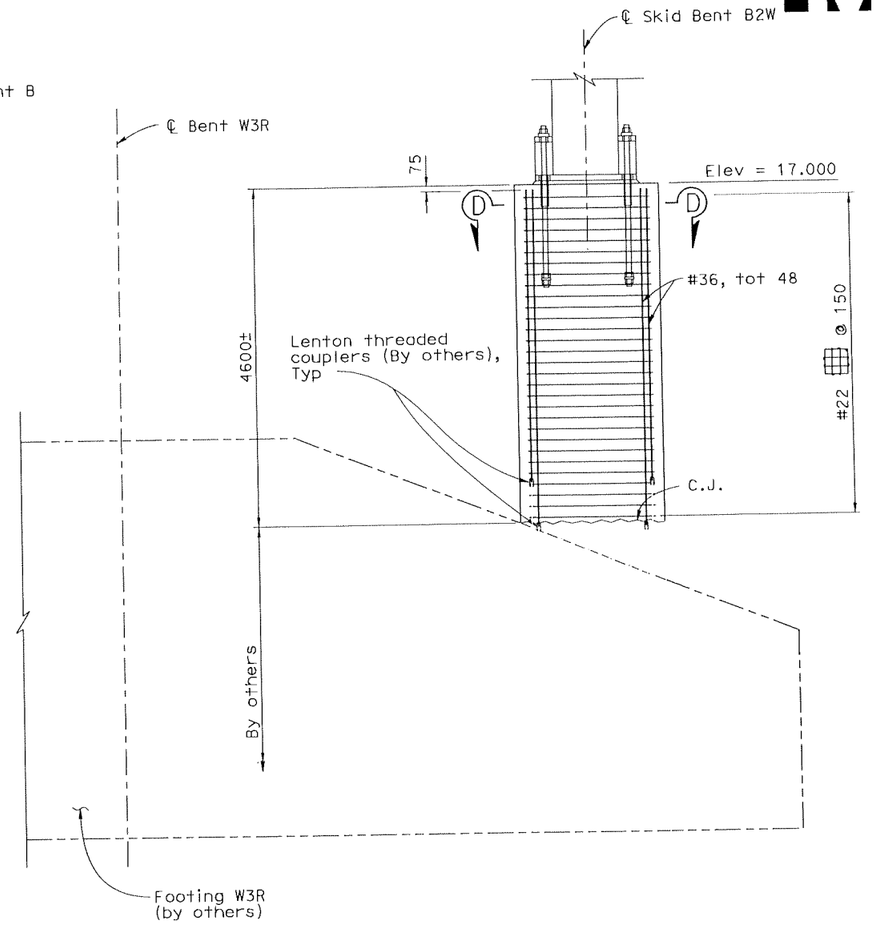

SECTION A-A
1:40

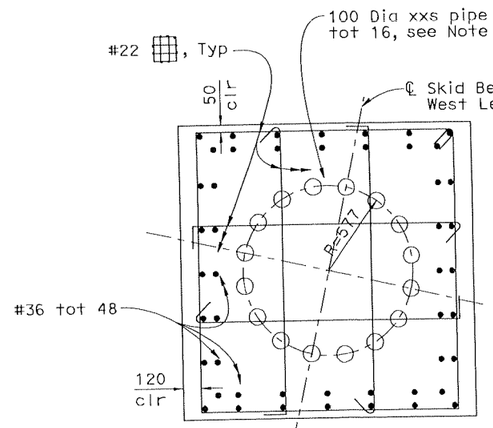

SECTION D-D
1:20

Notes:

1. For Section B-B and C-C, see "Skid Bent Footing Details No. 6" sheet.
2. Contractor shall verify all controlling field dimensions before ordering or fabricating any material.
3. For skid bent tower leg base connection, see Detail 1 on "Skid Bent Footing Details No. 2" sheet.

CONTRACT NO. 04-0020R4

CONTRACT CHANGE ORDER NO 90

SHEET 209 OF 227

ALL DIMENSIONS ARE IN MILLIMETERS UNLESS OTHERWISE SHOWN

100% PS&E

FILE => P:\BB\04-012001\ETI\100% Submittal\aeftg03.dgn
TIME PLOTTED => 1:07:57 PM
DATE PLOTTED => 11/4/2007
USERNAME => ALee

T. Ostrom/M. Whiteside/A. Akinsanya DESIGN OVERSIGHT SIGN OFF DATE		DESIGN	BY M. Chen/R. Nutt	CHECKED A. Pan	PREPARED FOR THE STATE OF CALIFORNIA DEPARTMENT OF TRANSPORTATION
		DETAILS	BY S. Lee	CHECKED A. Pan	
		QUANTITIES	BY H. Nelson	CHECKED A. Lee	

M. Sah
PROJECT ENGINEER
S. Abbas
PROJECT MANAGER

CU
EA 0120R4

BRIDGE NO. 34-0006 (TEMP)
KILOMETER POST 12.6

DISREGARD PRINTS BEARING EARLIER REVISION DATES →

REVISION DATES (PRELIMINARY STAGE ONLY): 11/5/07

SHEET 18 OF 214

SAN FRANCISCO OAKLAND BAY BRIDGE
EAST SPAN SEISMIC SAFETY PROJECT

EAST TIE-IN

SKID BENT FOOTING DETAILS NO. 5

DESIGN DETAIL SHEET (METRIC) (REV. 3/1/98)
@DATE@ @TIME@ Pen Table File

ORIGINAL SCALE IN MILLIMETERS FOR REDUCED PLANS 0 10 20 30 40 50 60 70 80 90 100

FILE => P:\BB\04-012001\ETI\100% Submittal\aeftg03.dgn

DIST	COUNTY	ROUTE	KILOMETER POST TOTAL PROJECT	SHEET No	TOTAL
04	SF	80	12.6/13.2	19	214

Mark Chen
REGISTERED CIVIL ENGINEER

11-5-07
PLANS APPROVAL DATE

REGISTERED PROFESSIONAL ENGINEER — Chl Mark Chen — No. C 40582 — Exp. 03/31/09 — CIVIL — STATE OF CALIFORNIA

The State of California or its officers or agents shall not be responsible for the accuracy or completeness of electronic copies of this plan sheet.

T.Y. LIN / MOFFATT & NICHOL
Two Harrison Street, Suite 500
San Francisco, CA 94105

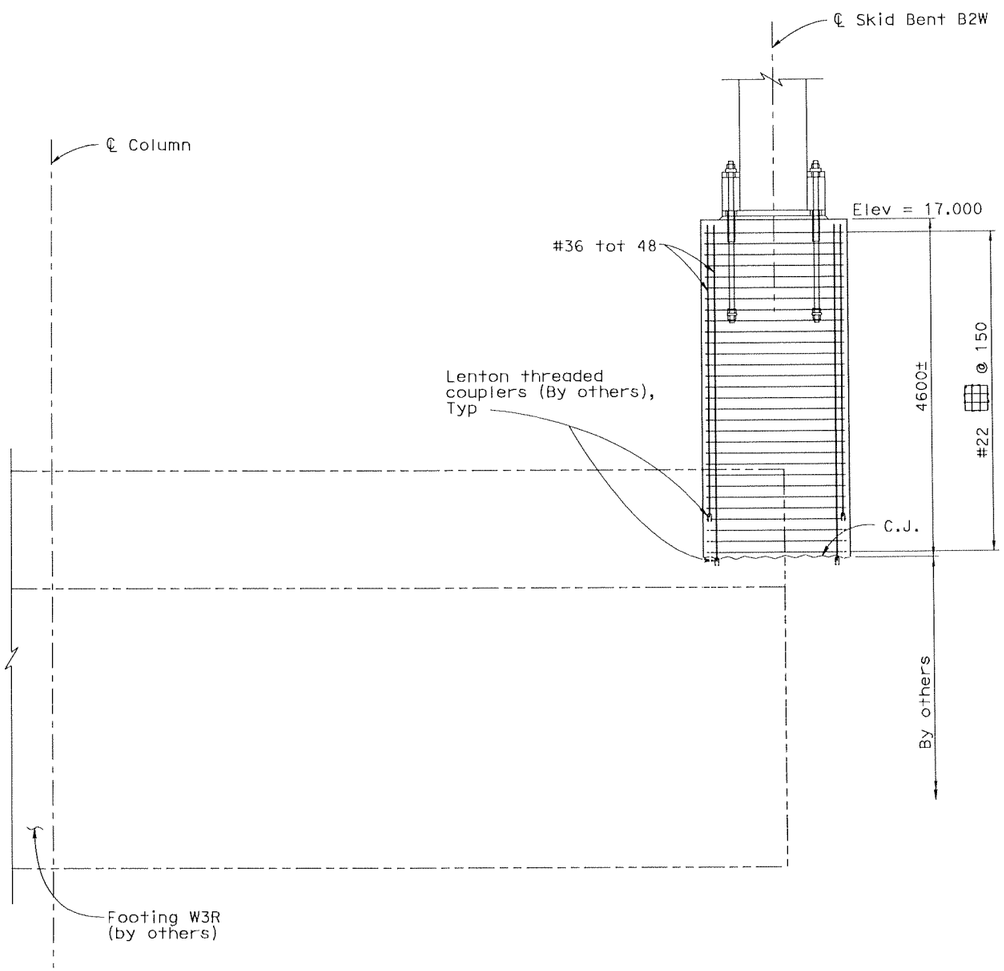

SECTION B-B
1:40

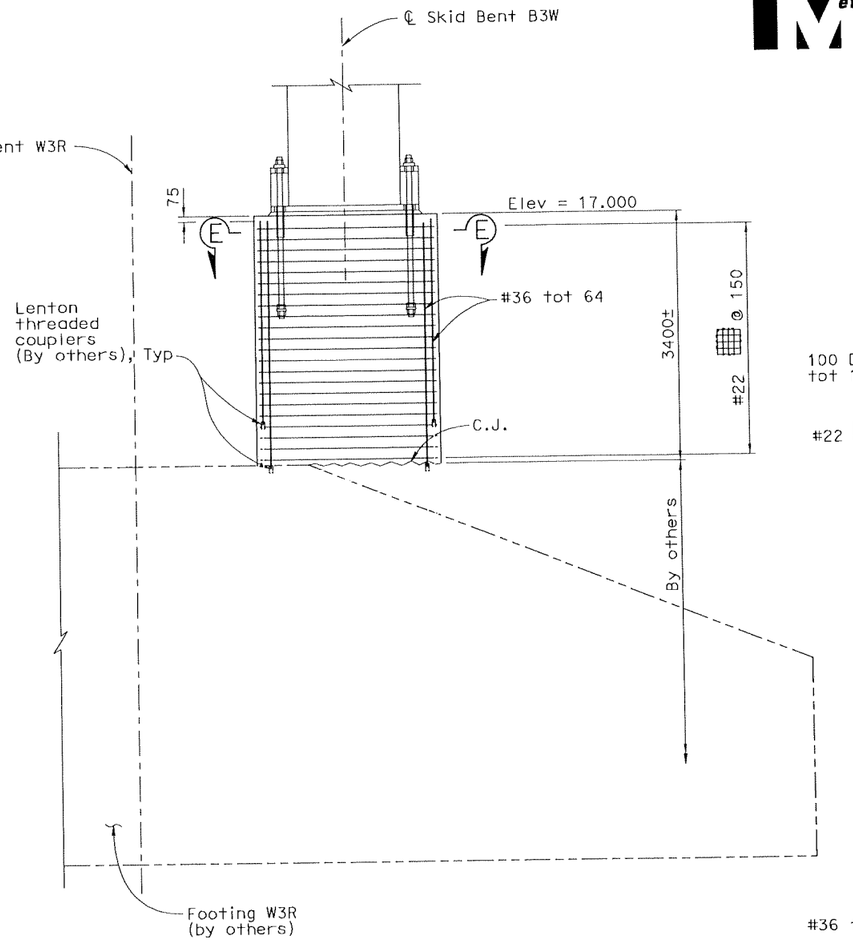

SECTION C-C
1:40

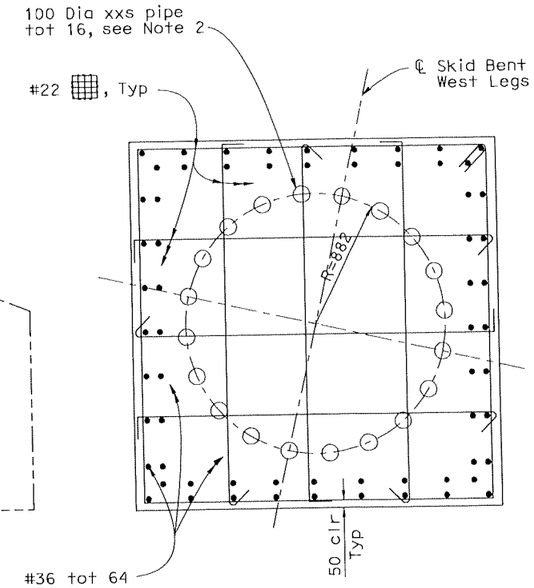

SECTION E-E
1:20

CONTRACT NO. 04-0K2024

CONTRACT CHANGE ORDER NO 90

SHEET 210 OF 227

Notes:

1. Contractor shall verify all controlling field dimensions before ordering or fabricating any material.
2. For skid bent tower leg base connection, see Detail 1 on "Skid Bent Footing Details No. 2" sheet.

ALL DIMENSIONS ARE IN MILLIMETERS UNLESS OTHERWISE SHOWN

SAN FRANCISCO OAKLAND BAY BRIDGE
EAST SPAN SEISMIC SAFETY PROJECT

EAST TIE-IN

SKID BENT FOOTING DETAILS NO. 6

DESIGN	BY M. Chen/R. Nutt	CHECKED A. Pan	PREPARED FOR THE STATE OF CALIFORNIA DEPARTMENT OF TRANSPORTATION
DETAILS	BY S. Lee	CHECKED A. Pan	
QUANTITIES	BY H. Nelson	CHECKED A. Lee	

T. Ostrom/M. Whiteside/A. Akinsanya
DESIGN OVERSIGHT

SIGN OFF DATE

M. Sah
PROJECT ENGINEER

S. Abbas
PROJECT MANAGER

CU
EA 0120R4

BRIDGE NO. 34-0006 (TEMP)
KILOMETER POST 12.6

DISREGARD PRINTS BEARING EARLIER REVISION DATES →

REVISION DATES (PRELIMINARY STAGE ONLY): 11/5/07

SHEET 19 OF 214

DESIGN DETAIL SHEET (METRIC) (REV. 3/1/98)
@DATE@ @TIME@ Pen Table File

ORIGINAL SCALE IN MILLIMETERS FOR REDUCED PLANS 0 10 20 30 40 50 60 70 80 90 100

FILE => P:\BB\04-012001\ETI\100% Submittal\aeftg04.dgn

100% PS&E
DATE PLOTTED => 11/4/2007
TIME PLOTTED => 1:08:37 PM
USERNAME => Alee
FILE => P:\BB\04-012001\ETI\100% Submittal\aeftg04.dgn

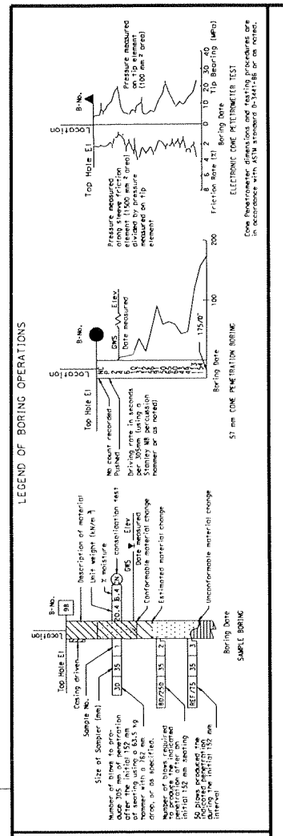

WEATHERING DESCRIPTORS

Modified from United States Bureau of Reclamation, Engineering Geology Field Manual.

Descriptors		Diagnostic features					General characteristics (strength, excavation, etc.) §
		Chemical weathering-Discoloration and/or oxidation		Mechanical weathering-Grain boundary conditions (disaggregation) primarily for granitics and some coarse-grained sediments	Texture and solutioning		
Alphanumeric descriptor	Descriptive term	Body of rock	Fracture surfaces†		Texture	Solutioning	
W1	Fresh	No discoloration, not oxidized.	No discoloration or oxidation.	No separation, intact (tight).	No change.	No solutioning.	Hammer rings when crystalline rocks are struck. Almost always rock excavation except for naturally weak or weakly cemented rocks such as siltstones or shales.
W2	Slightly weathered to fresh[O]						
W3	Slightly weathered	Discoloration or oxidation is limited to surface of, or short distance from, fractures; some feldspar crystals are dull.	Minor to complete discoloration or oxidation of most surfaces.	No visible separation, intact (tight).	Preserved.	Minor leaching of some soluble minerals may be noted.	Hammer rings when crystalline rocks are struck. Body of rock not weakened. With few exceptions, such as siltstones or shales, classified as rock excavation.
W4	Moderately to slightly weathered [O]						
W5	Moderately weathered	Discoloration or oxidation extends from fractures usually throughout; Fe-Mg minerals are "rusty," feldspar crystals are "cloudy."	All fracture surfaces are discolored or oxidized.	Partial separation of boundaries visible.	Generally preserved.	Soluble minerals may be mostly leached.	Hammer does not ring when rock is struck. Body of rock is slightly weakened. Depending on fracturing, usually is rock excavation except in naturally weak rocks such as siltstones or shales.
W6	Intensely to moderately weathered[O]						
W7	Intensely weathered	Discoloration or oxidation throughout; all feldspars and Fe-Mg minerals are altered to clay to some extent; or chemical alteration produces in-situ disaggregation, see grain boundary conditions.	All fracture surfaces are discolored or oxidized, surfaces friable.	Partial separation, rock is friable; in semigrid conditions granitics are disaggregated.	Texture altered by chemical disintegration (hydration, argillation).	Leaching of soluble minerals may be complete.	Dull sound when struck with hammer, usually can be broken with moderate to heavy manual pressure or by light hammer blow without reference to planes of weakness such as incipient or hairline fractures, or veinlets. Rock is significantly weakened. Usually common excavation.
W8	Very intensely weathered						
W9	Decomposed	Discolored or oxidized throughout, but resistant minerals such as quartz may be unaltered; all feldspars and Fe-Mg minerals are completely altered to clay.		Complete separation of grain boundaries (disaggregated).	Resembles a soil, partial or complete remnant rock structure may be preserved; leaching of soluble minerals usually complete.		Can be granulated by hand. Always common excavation. Resistant minerals such as quartz may be present as "stringers" or "dikes."

Note: This chart and its horizontal categories are more readily applied to rocks with feldspars and mafic minerals. Weathering in various sedimentary rocks, particularly limestones and poorly indurated sediments, will not always fit the categories established. This chart and weathering categories may have to be modified for particular site conditions or alteration such as hydrothermal effects; however, the basic framework and similar descriptors are to be used.

[O] Combination descriptors are permissible where equal distribution of both weathering characteristics are present over significant intervals or where characteristics present are "in between" the diagnostic feature. However, dual descriptors should not be used where significant, identifiable zones can be delineated. When given as a range only two adjacent terms may be combined. "Decomposed to slightly weathered," or "moderately weathered to fresh" are not acceptable.

† Does not include directional weathering along shears or faults and their associated features. For example, a shear zone that carried weathering to great depths into a fresh rock mass would not require the rock mass to be classified as weathered.

§ These are generalizations and should not be used as diagnostic features for weathering or excavation classification. These characteristics vary to a large extent based on naturally weak materials or cementation and type of excavation.

FRACTURE DENSITY

Modified from United States Bureau of Reclamation, Engineering Geology Field Manual.

FRACTURE DENSITY- Based on the spacing of all natural fractures in an exposure or core recovery lengths in boreholes; excludes mechanical breaks, shears, and shear zones; however, shear-disturbed zones (fracturing outside the shear) are included. Descriptors for fracture density apply to all rock exposures such as tunnel walls, dozer trenches, outcrops, or foundation cut slopes and inverts, as well as boreholes. Descriptive criteria presented below are based on borehole cores where lengths are measured along the core axis, for other exposures the criteria is distance measured between fractures (size of blocks).

UNFRACTURED (FD0): No fractures.

VERY SLIGHTLY FRACTURED (FD1): Core recovered mostly in lengths greater than 1 m.

SLIGHTLY TO VERY SLIGHTLY FRACTURED (FD2)*

SLIGHTLY FRACTURED (FD3): Core recovered mostly in lengths from 300 to 1000 mm, with few scattered lengths less than 300 mm or greater than 1000 mm.

MODERATELY TO SLIGHTLY FRACTURED (FD4)*

MODERATELY FRACTURED (FD5): Core recovered mostly in 100 to 300 mm lengths with most lengths about 200 mm.

INTENSELY TO MODERATELY FRACTURED (FD6)*

INTENSELY FRACTURED (FD7): Lengths overoge from 30 to 100 mm with scottered fragmented intervals. Core recovered mostly in lengths less than 100 mm.

VERY INTENSELY TO INTENSELY FRACTURED (FD8)*

VERY INTENSELY FRACTURED (FD9): Core recovered mostly as chips and fragments with a few scattered short core lengths.

* Combinations of fracture densities (e.g. very intensely to intensely fractured, or moderately to slightly fractured) are used where equal distribution of both fracture density characteristics are present over a significant interval or exposure, or where characteristics are "in between" the descriptor definitions.

ROCK HARDNESS DESCRIPTORS

Alphanumeric Descriptor	Descriptor	Criteria
H1	Extremely hard	Core, fragment, or exposure cannot be scratched with knife or sharp pick; can only be chipped with repeated heavy hammer blows.
H2	Very hard	Cannot be scratched with knife of sharp pick. Core or fragment breaks with repeated heavy hammer blows.
H3	Hard	Can be scratched with knife or sharp pick with difficulty (heavy pressure). Heavy hammer blow required to break specimen.
H4	Moderately hard	Can be scratched with knife or sharp pick with light or moderate pressure. Core or fragment breaks with moderate hammer blow.
H5	Moderately soft	Can be grooved 2 mm deep by knife or sharp pick with moderate or heavy pressure. Core or fragment breaks with light hammer blow or heavy manual pressure.
H6	Soft	Can be grooved or gouged easily by knife or sharp pick with light pressure, can be scratched with fingernail. Breaks with light to moderate manual pressure.
H7	Very soft	Can be readily indented, grooved or gouged with fingernail, or carved with a knife. Breaks with light manual pressure.

Any bedrock unit softer than H7, very soft, is to be described using ASTM D-2488 consistency descriptors.

Note: Although "sharp pick" is included in these definitions, descriptions of ability to be scratched, grooved or gouged by a knife is the preferred criteria.

Modified from United States Bureau of Reclamation, Engineering Geology Field Manual.

BEDDING, FOLIATION, OR FLOW TEXTURE DESCRIPTORS

Descriptors	Thickness / Spacing
Massive	Greater than 3 m
Very thickly (bedded, foliated, or banded)	1 to 3 m
Thickly	300 mm to 1 m
Moderately	100 to 300 mm
Thinly	30 to 100 mm
Very thinly	10 to 30 mm
Laminated (intensely foliated or banded)	Less than 10 mm

Modified from United States Bureau of Reclamation, Engineering Geology Field Manual.

ROCK QUALITY DESIGNATION (ROD) & PERCENT RECOVERY (REC) LOGGING

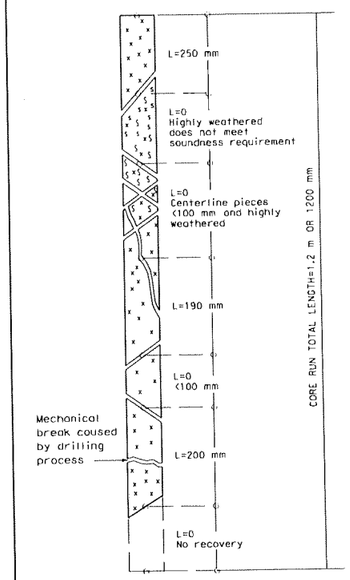

ROD (ROCK QUALITY DESIGNATION)	DESCRIPTION OF ROCK QUALITY
0 - 25%	VERY POOR
25 - 50%	POOR
50 - 75%	FAIR
75 - 90%	GOOD
90 - 100%	EXCELLENT

REC = Percent Core Recovery

$$REC = \frac{\sum \text{Length of all core pieces}}{\text{Total core run length}}$$

$$ROD = \frac{\sum \text{Length of sound core pieces} \geq 100 \text{ mm}}{\text{Total core run length}}$$

$$ROD = \frac{250+190+200}{1200} \times 100\%$$

ROD = 53% (fair)

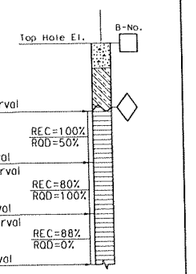

(No Scale)
After Deere & Deere, 1989

Caltrans Metric

DIST	COUNTY	ROUTE	KILOMETER POST TOTAL PROJECT	SHEET No	TOTAL SHEETS
04	SF	80	12.6 / 13.2		

CONTRACT NO. 04-0120R4

CONTRACT CHANGE ORDER NO 90

SHEET 211 OF 277

01/05/07
GEOTECHNICAL PROFESSIONAL

REGISTERED PROFESSIONAL ENGINEER — MIKE KAPUSKAR — NO. GE 2564 EXP. 12-31-08 — GEOTECHNICAL — STATE OF CALIFORNIA

PLANS APPROVAL DATE

The State of California or its officers or agents shall not be responsible for the accuracy or completeness of electronic copies of this plan sheet.

EARTH MECHANICS, INC.
17660 Newhope Street, Suite E
Fountain Valley, CA 92708

DESIGN OVERSIGHT	DRAWN BY	J. CASTLE	11/28/06
SIGN OFF DATE	CHECKED BY	M. KAPUSKAR	12/12/06

NA
FIELD INVESTIGATION BY:
DATE: NA

PREPARED FOR THE STATE OF CALIFORNIA DEPARTMENT OF TRANSPORTATION

M. KAPUSKAR
PROJECT ENGINEER

CU
EA 0120R4

BRIDGE NO. 34-0006 (TEMP)
KILOMETER POST 12.6

YBI EAST-TIE IN

LOG OF TEST BORINGS NO. 1

REVISION DATES (PRELIMINARY STAGE ONLY) | SHEET | OF

DISREGARD PRINTS BEARING EARLIER REVISION DATES

GEOTECHNICAL LOG OF TEST BORINGS SHEET (METRIC) (REV 2/1/00)

ORIGINAL SCALE IN MILLIMETERS FOR REDUCED PLANS 0 10 20 30 40 50 60 70 80 90 100

FILE => $REQUEST

USERNAME => $USER
DATE PLOTTED => $DATE
TIME PLOTTED => $TIME

DIST	COUNTY	ROUTE	KILOMETER POST TOTAL PROJECT	SHEET NO	TOTAL SHEETS
04	SF	80	12.6 / 13.2		

Caltrans Metric

02/06/07
GEOTECHNICAL PROFESSIONAL

REGISTERED PROFESSIONAL ENGINEER — MIKE KAPUSKAR — NO. GE 2564 EXP. 12-31-08 — GEOTECHNICAL — STATE OF CALIFORNIA

PLANS APPROVAL DATE

The State of California or its officers or agents shall not be responsible for the accuracy or completeness of electronic copies of this plan sheet.

EARTH MECHANICS, INC.
7700 Edgewater Drive, Suite 846
Oakland, CA 94621

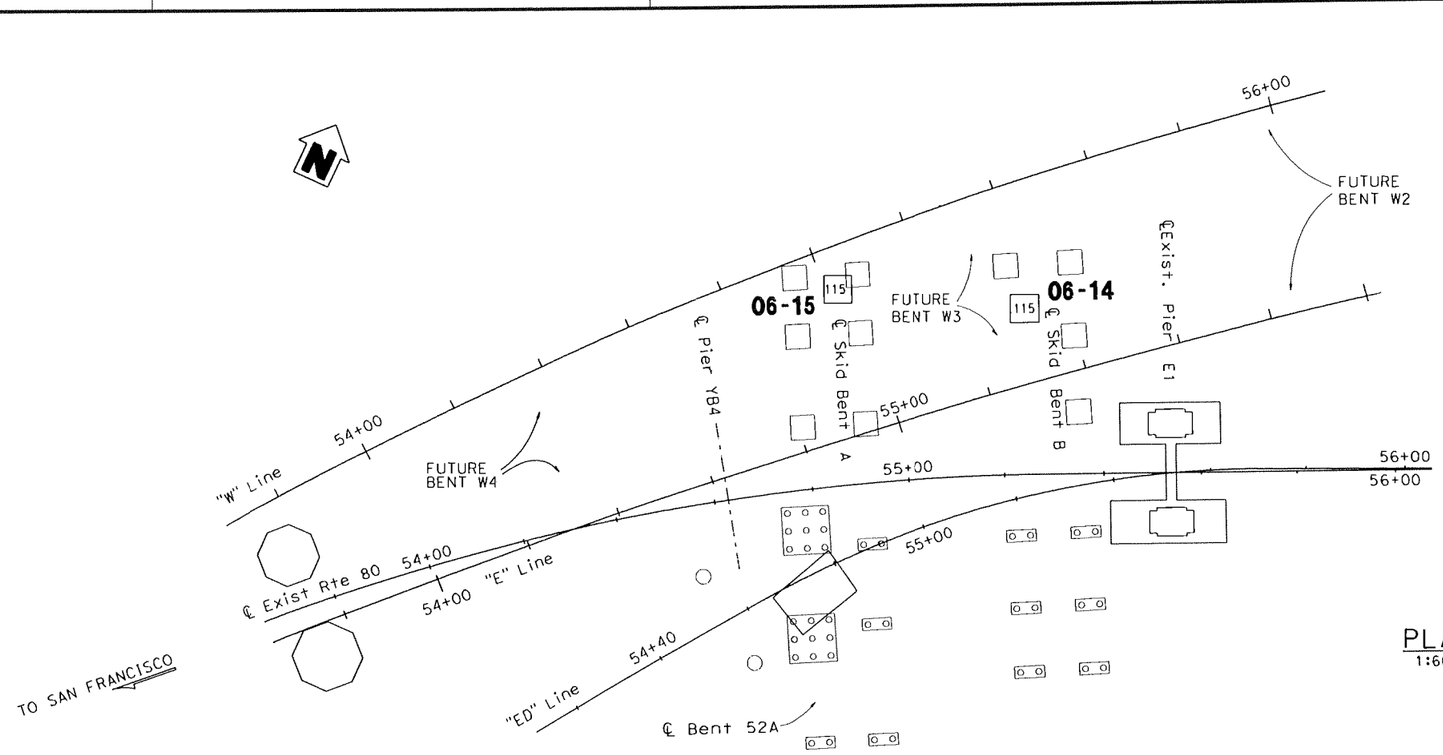

PLAN
1:600

CONTRACT NO. 04-012024

CONTRACT CHANGE ORDER NO 90

SHEET 212 OF 227

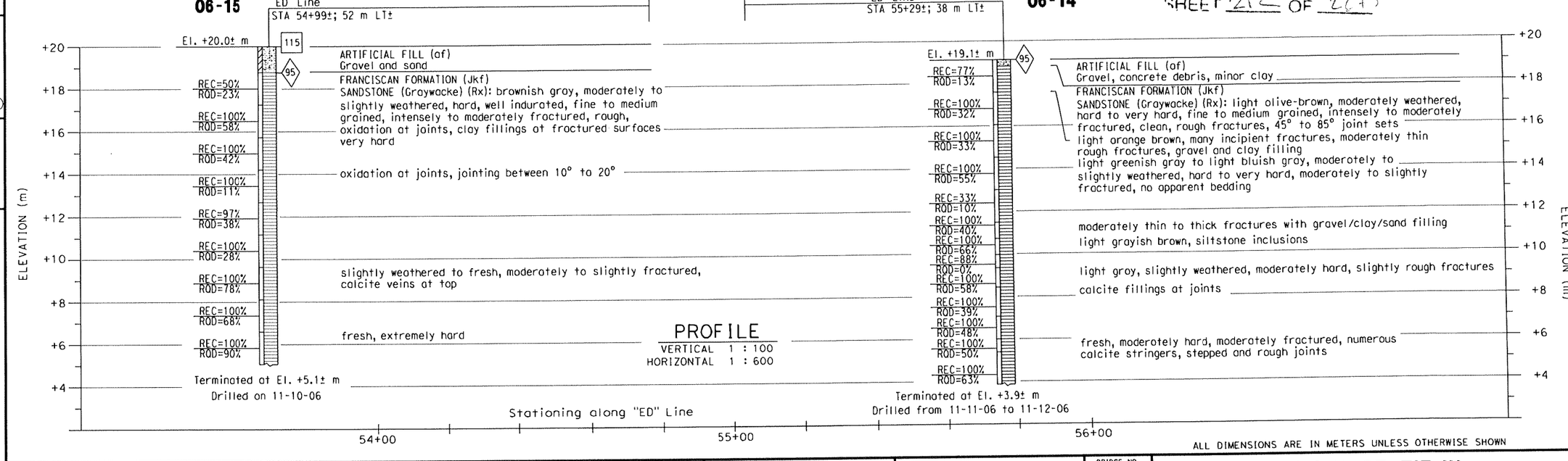

ALL DIMENSIONS ARE IN METERS UNLESS OTHERWISE SHOWN

LEGEND OF BORING OPERATIONS

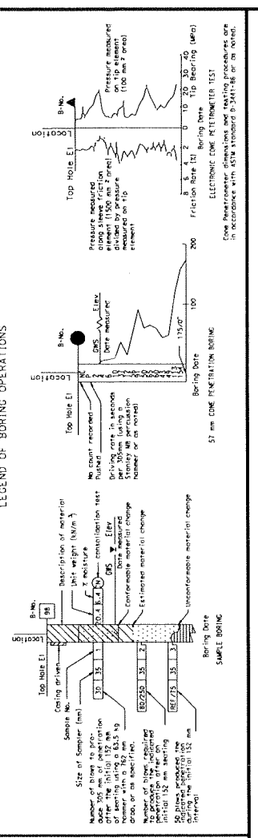

IN-SITU, LAB & FIELD TEST DESIGNATIONS

Atterberg Limits (AL)	Corrosivity (C)	Consolidation (CN)	Maximum Density (MD)	Direct Shear (DS)	R-value (R)	Pocket Penetrometer (PP)	Grain Size (GS)	Sand Equivalent (SE)	Unconfined Compression (UC)	Unconsolidated Undrained Triaxial (UU)	Wash analysis (▶)	

TYPE OF BORINGS

57 MM CONE PENETRATION	ROTARY WASH	ELECTRONIC CONE PENETROMETER	AUGER BORING(DRY)	TEST PIT	DIAMOND CORE BORING	SOIL TUBE
●	SIZE	◀ SIZE	SIZE	□	ATV	ATH

LEGEND FOR EARTH MATERIALS (USCS) BASED ON ASTM D2487, D2488

FILL MATERIAL; CLAY (CL or CH); SILT (ML or MH); PEAT and/or ORGANIC MATTER; WELL-GRADED GRAVEL (GW); POORLY GRADED GRAVEL (GP); SILTY GRAVEL (GM); CLAYEY GRAVEL (GC); Concrete; WELL GRADED SAND (SW); POORLY GRADED SAND (SP); SILTY SAND (SM); CLAYEY SAND (SC); COBBLES AND BOULDERS; IGNEOUS ROCK; SEDIMENTARY ROCK; METAMORPHIC ROCK

CONSISTENCY CLASSIFICATION FOR SOILS According to the Standard Penetration Test (ASTM D-1586)

SPT N-Value (Blows/300mm)	Granular	SPT N-Value (Blows/300mm)	Cohesive
0-4	Very Loose	<2	Very Soft
5-10	Loose	2-4	Soft
11-30	Medium Dense	5-8	Firm
31-50	Dense	9-15	Stiff
>50	Very Dense	16-30	Very Stiff
		>30	Hard

NOTE: Visual classification of earth materials are based on field inspection and are confirmed or revised with laboratory test results as necessary.

DESIGN OVERSIGHT	DRAWN BY	G. RANJAN	12/11/06	C.DOMROSE, G.RANJAN	PREPARED FOR THE STATE OF CALIFORNIA DEPARTMENT OF TRANSPORTATION
SIGN OFF DATE	CHECKED BY	M. KAPUSKAR	02/06/07	FIELD INVESTIGATION BY: DATE: AS NOTED	M. KAPUSKAR, PROJECT ENGINEER

BRIDGE NO. 34-006 (TEMP)
KILOMETER POST 12.6
CU EA 0120R4

YBI EAST TIE-IN

LOG OF TEST BORINGS NO. 2

GEOTECHNICAL LOG OF TEST BORINGS SHEET (METRIC) (REV 2/1/00)

ORIGINAL SCALE IN MILLIMETERS FOR REDUCED PLANS 0 10 20 30 40 50 60 70 80 90 100

DISREGARD PRINTS BEARING EARLIER REVISION DATES →

REVISION DATES (PRELIMINARY STAGE ONLY) | SHEET | OF

FILE => $REQUEST

USERNAME => $USER DATE PLOTTED => $DATE TIME PLOTTED => $TIME

CONTRACT NO. 04-0120R4

CONTRACT CHANGE ORDER NO 90

SHEET 213 OF 227

DIST	COUNTY	ROUTE	KILOMETER POST TOTAL PROJECT	SHEET No	TOTAL SHEETS
04	SF	80	12.6 / 13.2		

Caltrans Metric

GEOTECHNICAL PROFESSIONAL 02/06/07

PLANS APPROVAL DATE

REGISTERED PROFESSIONAL ENGINEER — MIKE KAPUSKAR — NO. GE 2564 EXP. 12-31-08 — GEOTECHNICAL — STATE OF CALIFORNIA

The State of California or its officers or agents shall not be responsible for the accuracy or completeness of electronic copies of this plan sheet.

FUGRO-EARTH MECHANICS J.V.
7700 Edgewater Drive, Suite 846
Oakland, CA 94621

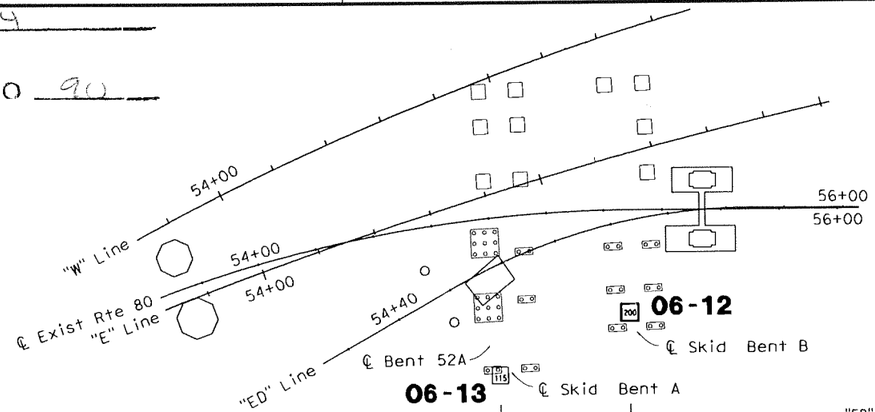

PLAN
1:1000

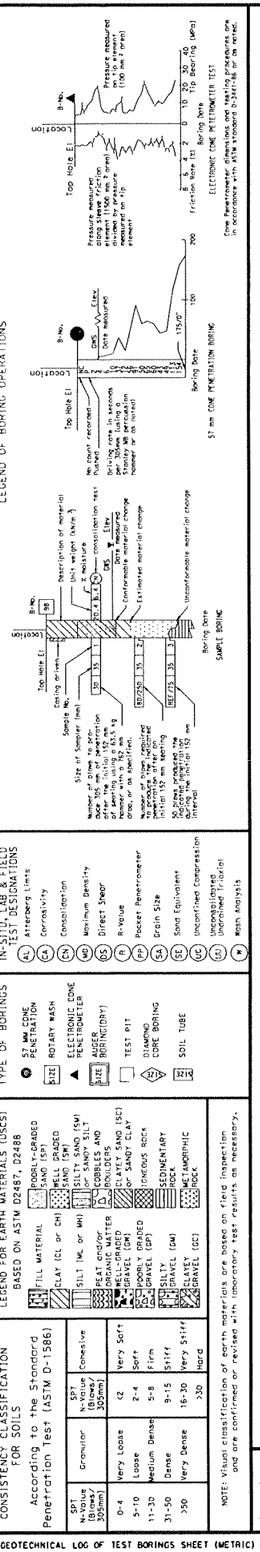

IN-SITU, LAB & FIELD TEST DESIGNATIONS

(CA) Corrosivity (AL) Atterberg Limits (CN) Consolidation (MD) Maximum Density (DS) Direct Shear (RV) R-Value (PP) Pocket Penetrometer (GS) Grain Size (SE) Sand Equivalent (UC) Unconfined Compression (UU) Unconsolidated Undrained Triaxial (MA) Mech. Analysis

TYPE OF BORINGS

ST 54 MM CONE PENETRATION · ROTARY WASH · ELECTRONIC CONE PENETROMETER · AUGER BORING (DRY) · TEST PIT · DIAMOND CORE BORING · SOIL TUBE

LEGEND FOR EARTH MATERIALS (USCS) BASED ON ASTM D2487, D2488

FILL MATERIAL · CLAY (CL or CH) · POORLY-GRADED SAND (SP) · WELL GRADED SAND (SW) · SILT (ML or MH) · SILTY SAND (SM) or SANDY SILT · PEAT, ORGANIC SOILS · COBBLES AND BOULDERS · WELL-GRADED GRAVEL (GW) · POORLY GRADED GRAVEL (GP) · CLAYEY SAND (SC) or SANDY CLAY · IGNEOUS ROCK · SILTY GRAVEL (GM) · SEDIMENTARY ROCK · CLAYEY GRAVEL (GC) · METAMORPHIC ROCK

CONSISTENCY CLASSIFICATION FOR SOILS According to the Standard Penetration Test (ASTM D-1586)

SPT N-value (Blows/ 305mm)	Granular	SPT N-value (Blows/ 305mm)	Cohesive
0-4	Very Loose	<2	Very Soft
5-10	Loose	2-4	Soft
11-30	Medium Dense	5-8	Firm
31-50	Dense	9-15	Stiff
>50	Very Dense	16-30	Very Stiff
		>30	Hard

NOTE: Visual classification of earth materials are based on field inspection and are confirmed or revised with laboratory test results as necessary.

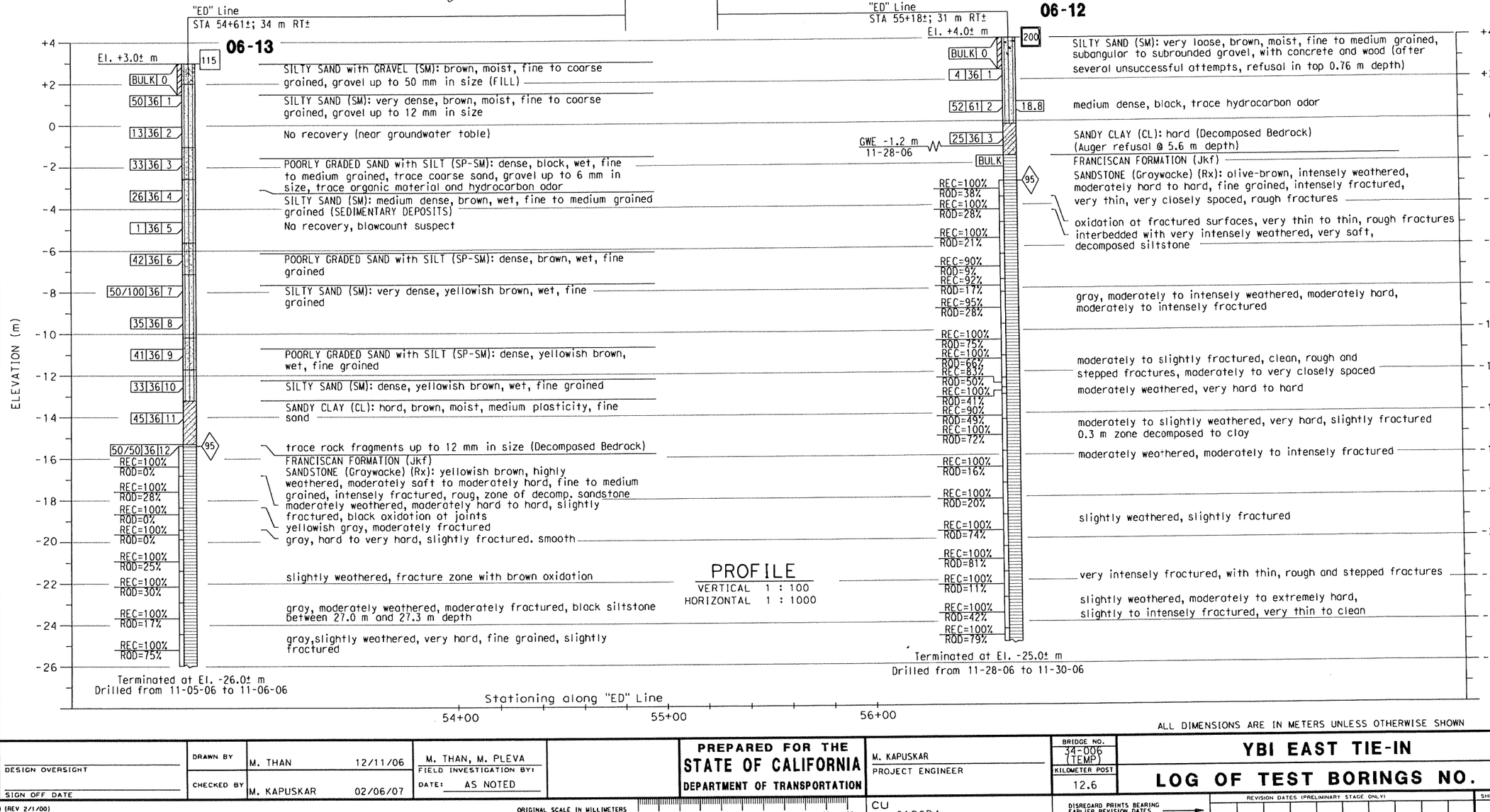

PROFILE
VERTICAL 1 : 100
HORIZONTAL 1 : 1000

ALL DIMENSIONS ARE IN METERS UNLESS OTHERWISE SHOWN

DESIGN OVERSIGHT	DRAWN BY	M. THAN	12/11/06	M. THAN, M. PLEVA	PREPARED FOR THE STATE OF CALIFORNIA DEPARTMENT OF TRANSPORTATION
SIGN OFF DATE	CHECKED BY	M. KAPUSKAR	02/06/07	FIELD INVESTIGATION BY: DATE: AS NOTED	M. KAPUSKAR PROJECT ENGINEER

BRIDGE NO. 34-0006 (TEMP)
KILOMETER POST 12.6

YBI EAST TIE-IN

LOG OF TEST BORINGS NO. 3

CU EA 0120R4

DISREGARD PRINTS BEARING EARLIER REVISION DATES →

REVISION DATES (PRELIMINARY STAGE ONLY)

SHEET OF

GEOTECHNICAL LOG OF TEST BORINGS SHEET (METRIC) (REV 2/1/00)

ORIGINAL SCALE IN MILLIMETERS FOR REDUCED PLANS 0 10 20 30 40 50 60 70 80 90 100

FILE => $REQUEST

DATE PLOTTED => $DATE TIME PLOTTED => $TIME USERNAME => $USER

DIST	COUNTY	ROUTE	KILOMETER POST TOTAL PROJECT	SHEET NO.	TOTAL SHEETS
04	SF	80	12.6/13.2		

REGISTERED GEOTECHNICAL ENGINEER

PLANS APPROVAL DATE

No. GE 2564
Exp. 12-31-08

FUGRO-EARTH MECHANICS,
A JOINT VENTURE
7700, Edgewater Dr., Ste. 846,
Oakland, CA 94621
(510) 562-8833, FAX (510) 562-8858

The State of California or its officers or agents shall not be responsible for the accuracy or completeness of electronic copies of this plan sheet.

SOIL AND ROCK TYPES

- Well graded GRAVEL (GW)
- Poorly graded GRAVEL (GP)
- GRAVEL with sand (GP or GW)
- GRAVEL with clay (GP or GW)
- Clayey GRAVEL (GC)
- GRAVEL with silt (GP or GW)
- Silty GRAVEL (GM)
- Well graded SAND (SW)
- Poorly graded SAND (SP)
- SAND with gravel (SP or SW)
- SAND with clay (SP-SC)
- Clayey SAND (SC)
- Silty SAND (SM)
- SAND with silt (SP-SM)
- Fat CLAY (CH)
- Sandy fat CLAY (CH)
- Lean CLAY (CL)
- Sandy lean CLAY (CL)
- Silty CLAY (CL-ML)
- Elastic SILT (MH)
- SILT (ML)
- Sandy SILT (ML)
- Clayey silt (ML/CL)
- Highly plastic ORGANICS (OH)
- Low plasticity ORGANICS (OL)
- SANDSTONE (Rx)
- SILTSTONE (Rx)
- CLAYSTONE (Rx)
- Interbedded Rock Strata (Rx)
- PAVEMENT

SAMPLERS

- 76mm-OD, 72mm-ID Thin Walled Tube
- 76mm-OD, 60mm-ID Modified California Liner
- 57mm-OD, 54mm-ID* Thin Walled Driven Tube
- 51mm-OD, 35mm-ID SPT Split Spoon Sampler
- 63.5mm-OD, 54mm-ID Offshore Liner
- Rock Core (Inset symbol represents recovery (%)

* A variable-OD, 54-mm-ID tapered driven tube was used to sample coarse sand, gravel and rock

STANDARD PENETRATION TEST (SPT) AND MODIFIED CALIFORNIA (MC) LINER SAMPLERS

Samplers were driven with a 63.5 kg hammer dropped approximately 760 mm.

20	Number of blows to produce 30 cm of penetration after the initial 15 cm of seating.
86/28cm	Number of blows required to produce the indicated penetration after an initial 15 cm seating.
Ref/8cm	50 blows produced the indicated penetration during the initial 15 cm interval.

Note: In rock coring interval recovery(%)-RQD are shown in the Blow Count column.

TUBE AND OFFSHORE LINER SAMPLERS

WOH	Offshore Liner sample advanced with the weight of an 80 kg hammer.
PUSH or SAVE	Pushed thin-walled 76mm-OD-tube.
15/60cm	Number of blows required to produce the indicated penetration using a 54mm-ID-tube sampler. The sampler was driven with an 80 kg downhole hammer dropped approximately 1.5 m.

CLASSIFICATION TESTS BLOW COUNTS AND ROCK QUALITY

- PERCENT PASSING #200 SIEVE
- WATER CONTENT (%)
- TOTAL UNIT WEIGHT (kN/m³)
- THEORETICAL TOTAL UNIT WEIGHT (kN/m³)
- PLASTIC LIMIT — LIQUID LIMIT
- EQUIVALENT SPT BLOW COUNT = (MC BLOWCOUNT/1.6) OR SPT BLOWCOUNT
- ROCK QUALITY DESIGNATION (RQD)
- ROCK RECOVERY PERCENT
- ROCK CORING RATE

STRENGTH TESTS

- POCKET PENETROMETER
- TORVANE
- REMOTE VANE
- MINIATURE VANE (R RESIDUAL VANE)
- UNCONSOLIDATED UNDRAINED TRIAXIAL
- SWEDISH FALL CONE
- UNCONFINED COMPRESSION (SOIL)
- (Open symbols indicate remolded tests)
- Shear Strength Interpreted from CPT Tip Resistance (Nk = 12-15)
- POINT LOAD TEST (ROCK-INTACT SPECIMEN)
- POINT LOAD TEST (ROCK-ALONG WEAK PLANE)
- UNCONFINED COMPRESSION (ROCK)
- Soil: Strength Exceeds Capacity of Measuring Device
  Rock: Sample broke along discontinuity; Intact sample would have greater strength
- FRACTURE DENSITY (RQCK)

STRENGTH OF COHESIVE SOILS

Consistency	Undrained Shear Strength kPa
Very Soft	less than 12
Soft	12 to 25
Firm	25 to 50
Stiff	50 to 100
Very Stiff	100 to 200
Hard	greater than 200

DENSITY OF GRANULAR SOILS

Descriptive Term	Relative Density (%)*
Very Loose	less than 15
Loose	15 to 35
Medium Dense	35 to 65
Dense	65 to 85
Very Dense	greater than 85

*Estimated from sampler driving record and CPT tip resistance.

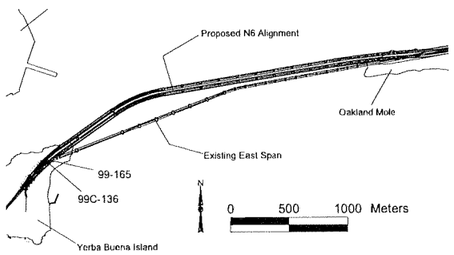

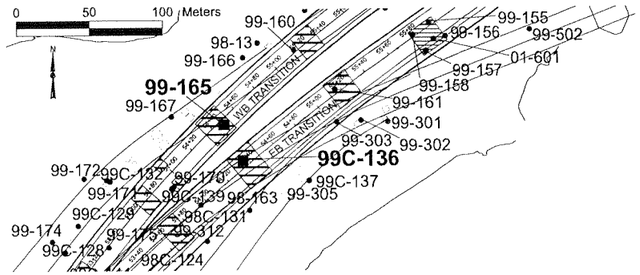

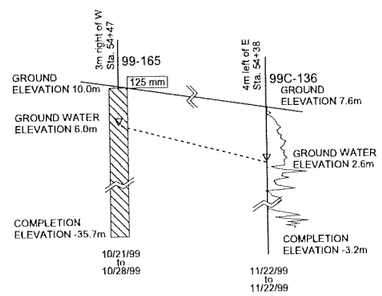

BORING 99-165

COORDINATES: E1836104 N647410
CA State Plane Zone 3, NAD83, Meters
GROUND ELEVATION: 10.0m (MSL)
START DATE: 10/21/99

STATION: 3m right of W Sta. 54+47
COMPLETION ELEVATION: -35.7m (MSL)
END DATE: 10/28/99

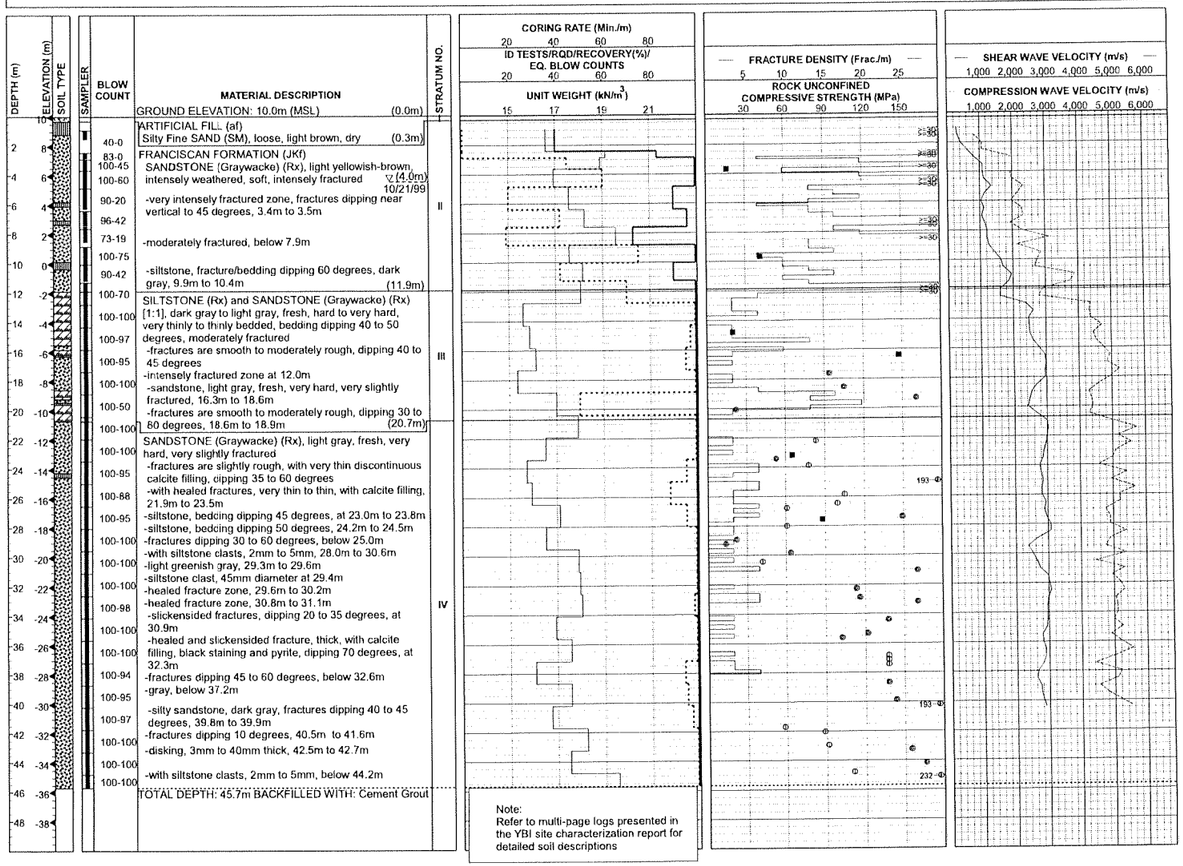

Note:
Refer to multi-page logs presented in the YBI site characterization report for detailed soil descriptions

CPT 99C-136

COORDINATES: E1836119 N647387
CA State Plane Zone 3, NAD83, Meters
GROUND ELEVATION: 7.6m (MSL)
START DATE: 11/22/99

STATION: 4m left of E Sta. 54+38
COMPLETION ELEVATION: -3.2m (MSL)
CONE END AREA: 15.00 sq. cm
(Area Ratio = 0.56)

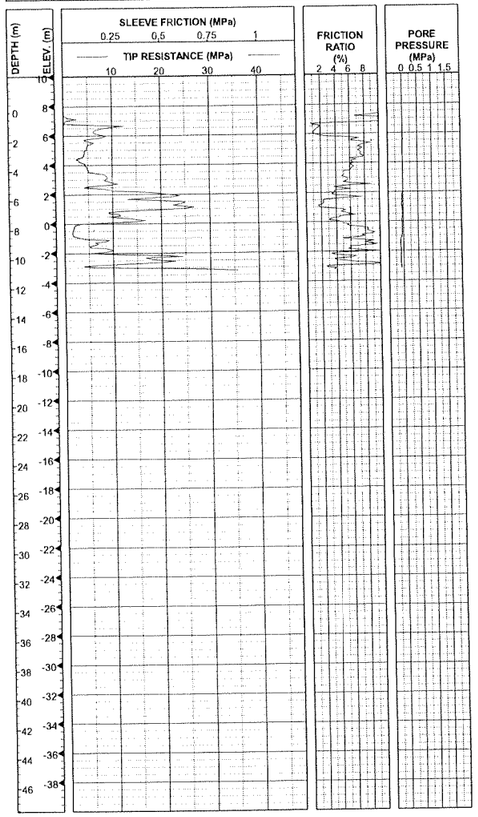

CONTRACT NO. 04-0120R4
CONTRACT CHANGE ORDER NO 90
SHEET 214 OF 227

ROBERT PRICE / SABA MOHAN GEOTECHNICAL DESIGN OVERSIGHT	DRAWN BY	A. BROUGHTON	C. PRENTICE FIELD INVESTIGATOR DATE SEE ABOVE	PREPARED FOR THE STATE OF CALIFORNIA DEPARTMENT OF TRANSPORTATION	M. KAPUSKAR PROJECT ENGINEER
	CHECKED BY	M. KAPUSKAR, S. VARATHARAJ			

ORIGINAL SCALE IN CENTIMETERS FOR REDUCED PLANS 0 1 2 3 4 5 6 7 8 9 10

CU
EA 0120 R4

BRIDGE NO.	34-0006 (TEMP)
KM POST	12.6
POST MILE	

SAN FRANCISCO OAKLAND BAY BRIDGE
EAST SPAN SEISMIC SAFETY PROJECT

YBI EAST TIE-IN

LOG OF TEST BORINGS NO. 4

DISREGARD PRINTS BEARING EARLIER REVISION DATES →

REVISION DATES (PRELIMINARY STAGE ONLY)								SHEET	OF

I:\dfs\projects\proj\Mole\source_2007_03_05\boring_99-305_99c-137\bh sdt_ext, 03/05/2007

SOIL AND ROCK TYPES

- Well graded GRAVEL (GW)
- Poorly graded GRAVEL (GP)
- GRAVEL with sand (GP or GW)
- GRAVEL with clay (GP or GW)
- Clayey GRAVEL (GC)
- GRAVEL with silt (GP or GW)
- Silty GRAVEL (GM)
- Well graded SAND (SW)
- Poorly graded SAND (SP)
- SAND with gravel (SP or SW)
- SAND with clay (SP-SC)
- Clayey SAND (SC)
- Silty SAND (SM)
- SAND with silt (SP-SM)
- Fat CLAY (CH)
- Sandy fat CLAY (CH)
- Lean CLAY (CL)
- Sandy lean CLAY (CL)
- Silty CLAY (CL-ML)
- Elastic SILT (MH)
- SILT (ML)
- Sandy SILT (ML)
- Clayey silt (ML/CL)
- Highly plastic ORGANICS (OH)
- Low plasticity ORGANICS (OL)
- SANDSTONE (Rx)
- SILTSTONE (Rx)
- CLAYSTONE (Rx)
- Interbedded Rock Strata (Rx)
- PAVEMENT

SAMPLERS

- 76mm-OD, 72mm-ID Thin Walled Tube
- 57mm-OD, 54mm-ID* Thin Walled Driven Tube
- 63.5mm-OD, 54mm-ID Offshore Liner
- 76mm-OD, 60mm-ID Modified California Liner
- 51mm-OD, 35mm-ID SPT Split Spoon Sampler
- Rock Core (Inset symbol represents recovery (%)

* A variable-OD, 54-mm-ID tapered driven tube was used to sample coarse sand, gravel and rock

STANDARD PENETRATION TEST (SPT) AND MODIFIED CALIFORNIA (MC) LINER SAMPLERS

Samplers were driven with a 63.5 kg hammer dropped approximately 760 mm.

20	Number of blows to produce 30 cm of penetration after the initial 15 cm of seating.
86/28cm	Number of blows required to produce the indicated penetration after an initial 15 cm seating
Ref/8cm	50 blows produced the indicated penetration during the initial 15 cm interval.

Note: In rock coring interval recovery(%)-ROD are shown in the Blow Count column.

TUBE AND OFFSHORE LINER SAMPLERS

WOH	Offshore Liner sample advanced with the weight of an 80 kg hammer.
PUSH or SAVE	Pushed thin-walled 76mm-OD-tube.
15/60cm	Number of blows required to produce the indicated penetration using a 54mm-ID-tube sampler. The sampler was driven with an 80 kg downhole hammer dropped approximately 1.5 m.

CLASSIFICATION TESTS BLOW COUNTS AND ROCK QUALITY

- PERCENT PASSING #200 SIEVE
- WATER CONTENT (%)
- TOTAL UNIT WEIGHT (KN/m³)
- THEORETICAL TOTAL UNIT WEIGHT (KN/m³)
- PLASTIC LIMIT LIQUID LIMIT
- EQUIVALENT SPT BLOW COUNT = (MC BLOWCOUNT/1.6) OR SPT BLOWCOUNT
- ROCK QUALITY DESIGNATION (RQD)
- ROCK RECOVERY PERCENT
- ROCK CORING RATE

STRENGTH TESTS

- POCKET PENETROMETER
- TORVANE
- REMOTE VANE
- MINIATURE VANE (R RESIDUAL VANE)
- UNCONSOLIDATED UNDRAINED TRIAXIAL
- SWEDISH FALL CONE
- UNCONFINED COMPRESSION (SOIL)
- (Open symbols indicate remolded tests)
- Shear Strength Interpreted from CPT Tip Resistance (Nk = 12-15)
- POINT LOAD TEST (ROCK-INTACT SPECIMEN)
- POINT LOAD TEST (ROCK-ALONG WEAK PLANE)
- UNCONFINED COMPRESSION (ROCK)
- Soil: Strength Exceeds Capacity of Measuring Device
  Rock: Sample broke along discontinuity, Intact sample would have greater strength
- FRACTURE DENSITY (ROCK)

STRENGTH OF COHESIVE SOILS

Consistency	Undrained Shear Strength kPa
Very Soft	less than 12
Soft	12 to 25
Firm	25 to 50
Stiff	50 to 100
Very Stiff	100 to 200
Hard	greater than 200

DENSITY OF GRANULAR SOILS

Descriptive Term	Relative Density (%)*
Very Loose	less than 15
Loose	15 to 35
Medium Dense	35 to 65
Dense	65 to 85
Very Dense	greater than 85

*Estimated from sampler driving record and CPT tip resistance.

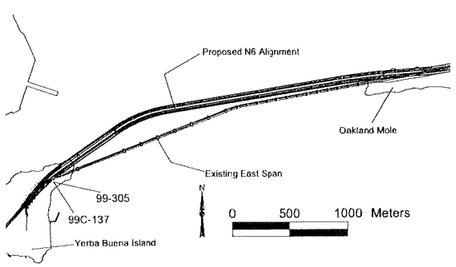

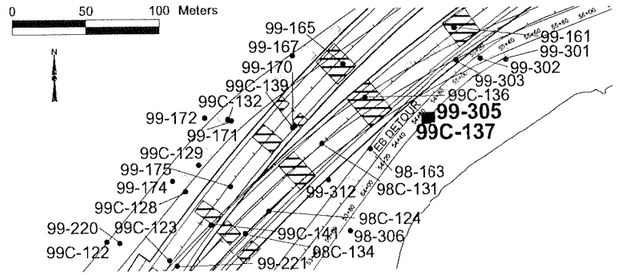

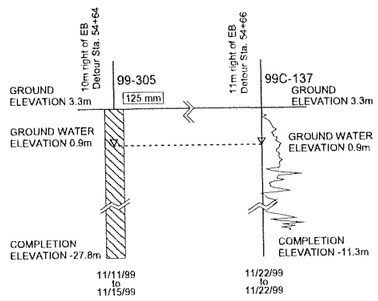

BORING 99-305

COORDINATES: E1836163 N647372
CA State Plane Zone 3, NAD83, Meters
GROUND ELEVATION: 3.3m (MSL)
START DATE: 11/11/99

STATION:
10m right of EB Detour Sta. 54+64
COMPLETION ELEVATION: -27.8m (MSL)
END DATE: 11/15/99

DEPTH (m)	ELEVATION (m)	SOIL TYPE	SAMPLER	BLOW COUNT	MATERIAL DESCRIPTION	STRATUM NO.
					GROUND ELEVATION: 3.3m (MSL) (0.0m)	
2	2			Bulk	ARTIFICIAL FILL (af)	I
				30	Silty Fine SAND with gravel (SM), medium dense, brown and yellowish brown, dry, with gravel and fragments of concrete and debris 11/11/99 (2.4m)	
4	0			50/13cm		
				10	-with a trace of medium to coarse sand (2.0m)	II
6	-2			10		
				12	Silty SAND with Gravel (SM), loose to medium dense, black to dark gray, wet	
8	-4			13	-with a petroleum odor to 3.8m (5.5m)	III
				37	SEDIMENTARY DEPOSITS (Qa)	
10	-6			67	Fine SAND with silt (SP-SM), dense, yellowish brown, moist (9.8m)	
				39		
12	-8			51	Sandy CLAY (CL), stiff, yellowish brown	IV
				31	(14.8m)	
14	-10			25/1cm		
				100-33	FRANCISCAN FORMATION (JKf)	
16	-12			60-55	SANDSTONE (Graywacke) (Rx), yellowish brown, moderately to slightly weathered, moderately hard to very hard, moderately fractured	
				100-43	-oxidized and slightly rough fracture surfaces	
18	-14			100-37	-slightly to moderately weathering, 16.5m to 18.9m	
				97-25	-with claystone fragments, 17.4m to 18.9m	
20	-16			100-65	-intensely fractured zone, with thin clay filling, 18.4m to 18.9m	V
				100-99	-slightly weathered, 18.9m to 23.8m	
22	-18			100-96	-intensely fractured zone at 19.7m	
				95-95	-intensely fractured zone at 20.2m	
24	-20			100-78	-intensely fractured zone at 20.6m	
				90-90	-intensely fractured zone, with fractures dipping 40 to 60 degrees, at 23.0m	
26	-22				-intensely fractured zone, with fractures dipping 40 to 80 degrees, 23.3m to 23.5m	
					-fresh, light gray, very hard, slightly fractured below 23.8m	
28	-24				-intensely fractured zone, fractures healed and open, with up to 6mm calcite filling and red oxidation, 29.0m to 29.4m	
					TOTAL DEPTH: 31.1m BACKFILLED WITH: Cement Grout	

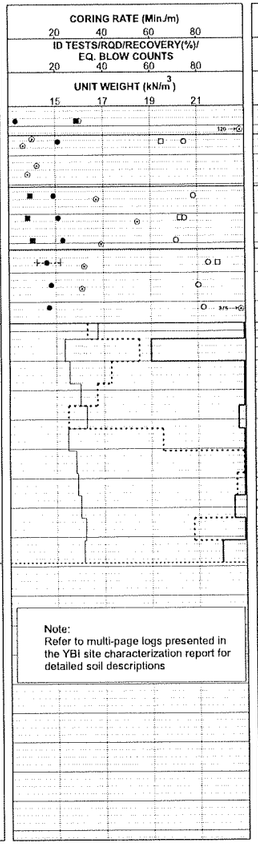

Note:
Refer to multi-page logs presented in the YBI site characterization report for detailed soil descriptions

CPT 99C-137

COORDINATES: E1836163 N647372
CA State Plane Zone 3, NAD83, Meters
GROUND ELEVATION: 3.3m (MSL)
START DATE: 11/22/99

STATION: 11m right of EB Detour Sta. 54+66
COMPLETION ELEVATION: -11.3m (MSL)
CONE END AREA: 15.00 sq. cm
(Area Ratio = 0.56)

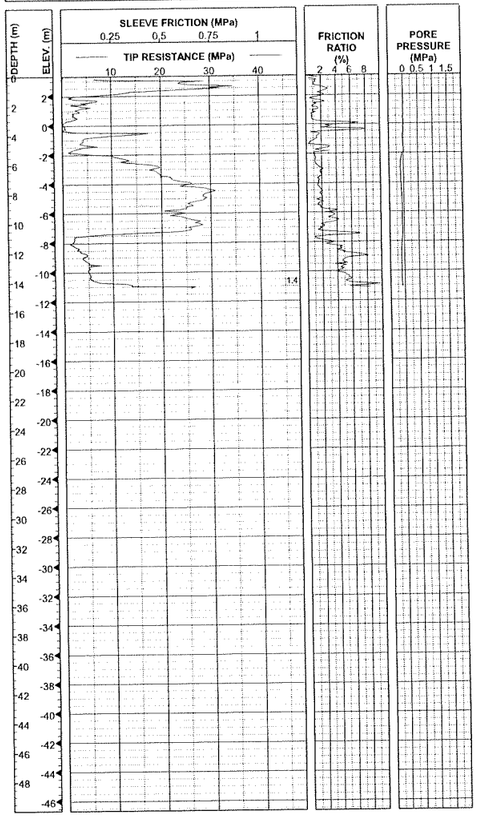

DIST	COUNTY	ROUTE	KILOMETER POST TOTAL PROJECT	SHEET NO.	TOTAL SHEETS
04	SF	80	12.6/13.2		

REGISTERED GEOTECHNICAL ENGINEER

PLANS APPROVAL DATE

No. GE 2564
Exp. 12-31-08

FUGRO-EARTH MECHANICS,
A JOINT VENTURE.
7700, Edgewater Dr., Ste. 846,
Oakland, CA 94621
(510) 562-8833, FAX (510) 562-8858

The State of California or its officers or agents shall not be responsible for the accuracy or completeness of electronic copies of this plan sheet.

CONTRACT NO. 04-0120 R4

CONTRACT CHANGE ORDER NO 90

SHEET 213 OF 297

ROBERT PRICE / SABA MOHAN GEOTECHNICAL DESIGN OVERSIGHT	DRAWN BY	A.BROUGHTON	E.CHASE, S.SICILIANO FIELD INVESTIGATOR	PREPARED FOR THE STATE OF CALIFORNIA DEPARTMENT OF TRANSPORTATION	M. KAPUSKAR PROJECT ENGINEER
	CHECKED BY	M. KAPUSKAR, S. VARATHARAJ	DATE SEE ABOVE		

ORIGINAL SCALE IN CENTIMETERS FOR REDUCED PLANS 0 1 2 3 4 5 6 7 8 9 10

CU
EA 0120 R4

BRIDGE NO.	SAN FRANCISCO OAKLAND BAY BRIDGE EAST SPAN SEISMIC SAFETY PROJECT
34-0006 (TEMP)	YBI EAST TIE-IN
KM POST 12.6	LOG OF TEST BORINGS NO. 5
POST MILE	DISREGARD PRINTS BEARING EARLIER REVISION DATES → REVISION DATES (PRELIMINARY STAGE ONLY) SHEET OF

SOIL AND ROCK TYPES

- Well graded GRAVEL (GW)
- Poorly graded GRAVEL (GP)
- GRAVEL with sand (GP or GW)
- GRAVEL with clay (GP or GW)
- Clayey GRAVEL (GC)
- GRAVEL with silt (GP or GW)
- Silty GRAVEL (GM)
- Well graded SAND (SW)
- Poorly graded SAND (SP)
- SAND with gravel (SP or SW)
- SAND with clay (SP-SC)
- Clayey SAND (SC)
- Silty SAND (SM)
- SAND with silt (SP-SM)
- Fat CLAY (CH)
- Sandy fat CLAY (CH)
- Lean CLAY (CL)
- Sandy lean CLAY (CL)
- Silty CLAY (CL-ML)
- Elastic SILT (MH)
- SILT (ML)
- Sandy SILT (ML)
- Clayey silt (ML/CL)
- Highly plastic ORGANICS (OH)
- Low plasticity ORGANICS (OL)
- SANDSTONE (Rx)
- SILTSTONE (Rx)
- CLAYSTONE (Rx)
- Interbedded Rock Strata (Rx)
- PAVEMENT

SAMPLERS

- 76mm-OD, 72mm-ID Thin Walled Tube
- 57mm-OD, 54mm-ID* Thin Walled Driven Tube
- 63.5mm-OD, 54mm-ID Offshore Liner
- 76mm-OD, 60mm-ID Modified California Liner
- 51mm-OD, 35mm-ID SPT Split Spoon Sampler
- Rock Core (inset symbol represents recovery (%)

* A variable-OD, 54-mm-ID tapered driven tube was used to sample coarse sand, gravel and rock

STANDARD PENETRATION TEST (SPT) AND MODIFIED CALIFORNIA (MC) LINER SAMPLERS

Samplers were driven with a 63.5 kg hammer dropped approximately 760 mm.

20	Number of blows to produce 30 cm of penetration after the initial 15 cm of seating.
86/28cm	Number of blows required to produce the indicated penetration after an initial 15 cm seating
Ref/8cm	50 blows produced the indicated penetration during the initial 15 cm interval.

Note: In rock coring interval recovery(%)-RQD are shown in the Blow Count column.

TUBE AND OFFSHORE LINER SAMPLERS

WOH	Offshore Liner sample advanced with the weight of an 80 kg hammer.
PUSH or SAVE	Pushed thin-walled 76mm-OD-tube.
15/60cm	Number of blows required to produce the indicated penetration using a 54mm-ID-tube sampler. The sampler was driven with an 80 kg downhole hammer dropped approximately 1.5 m.

CLASSIFICATION TESTS BLOW COUNTS AND ROCK QUALITY

- ■ PERCENT PASSING #200 SIEVE
- ● WATER CONTENT (%)
- □ TOTAL UNIT WEIGHT (kN/m^3)
- ○ THEORETICAL TOTAL UNIT WEIGHT (kN/m^3)
- PLASTIC LIMIT LIQUID LIMIT
- ⊚ EQUIVALENT SPT BLOW COUNT = (MC BLOWCOUNT/1.6) OR SPT BLOWCOUNT
- ROCK QUALITY DESIGNATION (RQD)
- ROCK RECOVERY PERCENT
- ROCK CORING RATE

STRENGTH TESTS

- POCKET PENETROMETER
- TORVANE
- REMOTE VANE
- MINIATURE VANE (RESIDUAL VANE)
- UNCONSOLIDATED UNDRAINED TRIAXIAL
- SWEDISH FALL CONE
- UNCONFINED COMPRESSION (SOIL)
- (Open symbols indicate remolded tests)
- Shear Strength Interpreted from CPT Tip Resistance (Nk = 12-15)
- POINT LOAD TEST (ROCK-INTACT SPECIMEN)
- POINT LOAD TEST (ROCK-ALONG WEAK PLANE)
- UNCONFINED COMPRESSION (ROCK)
- \+ Soil: Strength Exceeds Capacity of Measuring Device; Rock: Sample broke along discontinuity, Intact sample would have greater strength
- FRACTURE DENSITY (ROCK)

STRENGTH OF COHESIVE SOILS

Consistency	Undrained Shear Strength kPa
Very Soft	less than 12
Soft	12 to 25
Firm	25 to 50
Stiff	50 to 100
Very Stiff	100 to 200
Hard	greater than 200

DENSITY OF GRANULAR SOILS

Descriptive Term	Relative Density (%)*
Very Loose	less than 15
Loose	15 to 35
Medium Dense	35 to 65
Dense	65 to 85
Very Dense	greater than 85

*Estimated from sampler driving record and CPT tip resistance.

DIST	COUNTY	ROUTE	KILOMETER POST TOTAL PROJECT	SHEET NO.	TOTAL SHEETS
04	SF	80	12.6/13.2		

REGISTERED GEOTECHNICAL ENGINEER

PLANS APPROVAL DATE

No. GE 2564
Exp. 12-31-08

FUGRO-EARTH MECHANICS,
A JOINT VENTURE.
7700, Edgewater Dr., Ste. 846,
Oakland, CA 94621
(510) 562-8833, FAX (510) 562-8858

The State of California or its officers or agents shall not be responsible for the accuracy or completeness of electronic copies of this plan sheet.

BORING 99-161

COORDINATES: E1836181 N647434
CA State Plane Zone 3, NAD83, Meters
GROUND ELEVATION: 18.6m (MSL)
START DATE: 12/2/99

STATION: 3m left of E Sta. 55+16
COMPLETION ELEVATION: -36.7m (MSL)
END DATE: 12/8/99

BLOW COUNT	MATERIAL DESCRIPTION	STRATUM NO.
	GROUND ELEVATION: 18.6m (MSL) (0.0m)	
	ARTIFICIAL FILL (af) (1.5m)	I
100-0 100-17 96-37 100-83 100-43	FRANCISCAN FORMATION (JKf) SANDSTONE (Rx), light brown, decomposed to intensely weathered, very soft and moderately soft, poorly to moderately indurated, intensely fractured	II
100-53 100-40 100-30 100-43 100-33 100-69 98-85 100-90	-fresh, slightly to moderately fractured, very well indurated, below 16.2m	II
100-80 100-66 100-83	-sub-vertical fracture, 19.4m to 20.1m -siltstone, 20.0m to 20.3m -siltstone at 20.7m	II
100-65 100-28 100-73 100-25	-siltstone, 23.3m to 23.7m -bedding dipping at 70 degrees, at 23.7m -siltstone, dipping 35 degrees, 25.0m to 25.5m -very intensely fractured zone at 25.5m (30.6m)	II
100-83 100-66 100-80 100-93	SILTSTONE (Rx), CLAYSTONE (Rx), and SANDSTONE (Graywacke) (Rx) [2:1:1] (36.7m)	III
100-80 100-65 100-59 95-82 100-40 96-30 100-62 100-88 100-92 96-37 100-56 100-82 100-100	SANDSTONE (Rx) light gray, fresh, very hard, well indurated, massive, moderately to intensely fractured -interbedded siltstone and claystone, 40.1m to 40.4m -with siltstone interbeds, 42.3m to 42.6m -interbedded sandstone, siltstone, and claystone, 44.3m to 44.8m -interbedded sandstone, siltstone, and claystone, dipping 60 to 65 degrees, 45.2m to 46.1m -interbedded sandstone, siltstone, and claystone, dipping at 65 degrees, 47.6m to 48.3m -interbedded sandstone, siltstone, and claystone, 49.8m to 50.7m -laminated siltstone, and claystone, dipping 50 to 70 degrees, 51.7m to 52.1m -very intensely fractured zone, dipping 20 to 40 degrees, 53.0m to 53.2m -claystone, bedding dipping 55 degrees, 54.4m to 54.7m TOTAL DEPTH: 55.3m BACKFILLED WITH: Cement Grout	IV

Depth (m): 4, 8, 12, 16, 20, 24, 28, 32, 36, 40, 44, 48, 52, 56, 60. Elevation (m): 16, 12, 8, 4, 0, -4, -8, -12, -16, -20, -24, -28, -32, -36, -40.

BORING 99-302

COORDINATES: E1836199 N647413
CA State Plane Zone 3, NAD83, Meters
GROUND ELEVATION: 5.4m (MSL)
START DATE: 11/17/99

STATION: 15m right of E Sta. 55+03
COMPLETION ELEVATION: -25.1m (MSL)
END DATE: 11/19/99

BLOW COUNT	MATERIAL DESCRIPTION	STRATUM NO.
	GROUND ELEVATION: 5.4m (MSL) (0.0m)	
15-19 100-0 63-20 73-8 90-13 87-21 94-58 83-10	FRANCISCAN FORMATION (JKf) SANDSTONE (Graywacke) (Rx), light yellowish brown, moderately weathered to fresh, hard -moderately to well indurated, fine to medium grained, very intensely to moderately fractured 11/29/99 (4.8m) -interbedded sandstone and siltstone, 3.2m to 3.7m -siltstone, very intensely fractured, 6.7m to 6.9m	I
100-32 100-68 93-77 100-77 92-31 100-50 100-69 88-16 100-28 73-0 83-42 100-87 100-100	-siltstone, very intensely fractured, dipping 60 to 70 degrees, 11.9m to 12.3m -fresh, hard to very hard, moderately to very slightly fractured, below 15.0m -with silt, gray, moderately hard, intensely fractured, 17.6m to 18.3m -hard, intensely fractured, 21.3m to 22.9m -intensely to very intensely fractured, 22.9m to 25.9m -siltstone, dipping 40 to 50 degrees, at 23.9m -moderately to intensely fractured, 25.9m to 27.4m -siltstone, dipping 50 degrees, 27.4m to 27.6m -siltstone, dipping 45 degrees, 27.9m to 28.3m -siltstone, dipping 50 degrees, 30.3m to 30.5m TOTAL DEPTH: 30.5m BACKFILLED WITH: Cement Grout	I

Depth (m): 0, 4, 8, 12, 16, 20, 24, 28, 32, 36, 40, 44, 48. Elevation (m): 16, 12, 8, 4, 0, -4, -8, -12, -16, -20, -24, -28, -32, -36, -40.

CONTRACT NO. 04-0120R4
CONTRACT CHANGE ORDER NO 90
SHEET 46 OF 227

SAN FRANCISCO OAKLAND BAY BRIDGE
EAST SPAN SEISMIC SAFETY PROJECT

YBI EAST TIE-IN

LOG OF TEST BORINGS NO. 6

ROBERT PRICE / SABA MOHAN GEOTECHNICAL DESIGN OVERSIGHT	DRAWN BY: C. CACERES CHECKED BY: M. KAPUSKAR, S. SICILIANO	L. FLUKE, E.CHASE FIELD INVESTIGATOR DATE SEE ABOVE	PREPARED FOR THE STATE OF CALIFORNIA DEPARTMENT OF TRANSPORTATION

M. KAPUSKAR
PROJECT ENGINEER

BRIDGE NO. 34-0006 (TEMP)
KM POST 12.6
POST MILE

ORIGINAL SCALE IN CENTIMETERS FOR REDUCED PLANS 0 1 2 3 4 5 6 7 8 9 10

CU
EA 0120 R4

DISREGARD PRINTS BEARING EARLIER REVISION DATES → REVISION DATES (PRELIMINARY STAGE ONLY) SHEET OF

SOIL AND ROCK TYPES

- Well graded GRAVEL (GW)
- Poorly graded GRAVEL (GP)
- GRAVEL with sand (GP or GW)
- GRAVEL with clay (GP or GW)
- Clayey GRAVEL (GC)
- GRAVEL with silt (GP or GW)
- Silty GRAVEL (GM)
- Well graded SAND (SW)
- Poorly graded SAND (SP)
- SAND with gravel (SP or SW)
- SAND with clay (SP-SC)
- Clayey SAND (SC)
- Silty SAND (SM)
- SAND with silt (SP-SM)
- Fat CLAY (CH)
- Sandy fat CLAY (CH)
- Lean CLAY (CL)
- Sandy lean CLAY (CL)
- Silty CLAY (CL-ML)
- Elastic SILT (MH)
- SILT (ML)
- Sandy SILT (ML)
- Clayey silt (ML/CL)
- Highly plastic ORGANICS (OH)
- Low plasticity ORGANICS (OL)
- SANDSTONE (Rx)
- SILTSTONE (Rx)
- CLAYSTONE (Rx)
- Interbedded Rock Strata (Rx)
- PAVEMENT

SAMPLERS

- 76mm-OD, 72mm-ID Thin Walled Tube
- 76mm-OD, 60mm-ID Modified California Liner
- 57mm-OD, 54mm-ID* Thin Walled Driven Tube
- 51mm-OD, 35mm-ID SPT Split Spoon Sampler
- 63.5mm-OD, 54mm-ID Offshore Liner
- Rock Core (Inset symbol represents recovery (%))

* A variable-OD, 54-mm-ID tapered driven tube was used to sample coarse sand, gravel and rock

STANDARD PENETRATION TEST (SPT) AND MODIFIED CALIFORNIA (MC) LINER SAMPLERS

Samplers were driven with a 63.5 kg hammer dropped approximately 760 mm.

20	Number of blows to produce 30 cm of penetration after the initial 15 cm of seating.
86/28cm	Number of blows required to produce the indicated penetration after an initial 15 cm seating.
Ref/8cm	50 blows produced the indicated penetration during the initial 15 cm interval.

Note: In rock coring interval recovery(%)-RQD are shown in the Blow Count column.

TUBE AND OFFSHORE LINER SAMPLERS

WOH	Offshore Liner sample advanced with the weight of an 80 kg hammer.
PUSH or SAVE	Pushed thin-walled 76mm-OD-tube.
15/60cm	Number of blows required to produce the indicated penetration using a 54mm-ID-tube sampler. The sampler was driven with an 80 kg downhole hammer dropped approximately 1.5 m.

CLASSIFICATION TESTS BLOW COUNTS AND ROCK QUALITY

- ■ PERCENT PASSING #200 SIEVE
- ● WATER CONTENT (%)
- □ TOTAL UNIT WEIGHT (kN/m³)
- ○ THEORETICAL TOTAL UNIT WEIGHT (kN/m³)

PLASTIC LIMIT ⊣ LIQUID LIMIT

- ⊙ EQUIVALENT SPT BLOW COUNT = (MC BLOWCOUNT/1.6) OR SPT BLOWCOUNT
- ROCK QUALITY DESIGNATION (RQD)
- ROCK RECOVERY PERCENT
- ROCK CORING RATE

STRENGTH TESTS

- ⊛ POCKET PENETROMETER
- ◈ TORVANE
- ◇ REMOTE VANE
- ◆ MINIATURE VANE (⊗ RESIDUAL VANE)
- ▲ UNCONSOLIDATED UNDRAINED TRIAXIAL
- ▼ SWEDISH FALL CONE
- ⊡ UNCONFINED COMPRESSION (SOIL)
- ◇△ (Open symbols indicate remolded tests)
- Shear Strength Interpreted from CPT Tip Resistance (Nk = 12-15)
- ◐ POINT LOAD TEST (ROCK-INTACT SPECIMEN)
- ◎ POINT LOAD TEST (ROCK-ALONG WEAK PLANE)
- ■ UNCONFINED COMPRESSION (ROCK)
- ┼ Soil: Strength Exceeds Capacity of Measuring Device
  Rock: Sample broke along discontinuity; intact sample would have greater strength
- FRACTURE DENSITY (ROCK)

STRENGTH OF COHESIVE SOILS

Consistency	Undrained Shear Strength kPa
Very Soft	less than 12
Soft	12 to 25
Firm	25 to 50
Stiff	50 to 100
Very Stiff	100 to 200
Hard	greater than 200

DENSITY OF GRANULAR SOILS

Descriptive Term	Relative Density (%)*
Very Loose	less than 15
Loose	15 to 35
Medium Dense	35 to 65
Dense	65 to 85
Very Dense	greater than 85

*Estimated from sampler driving record and CPT tip resistance.

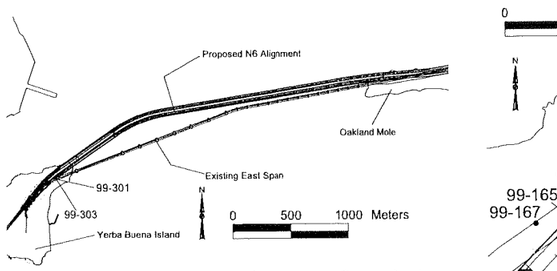

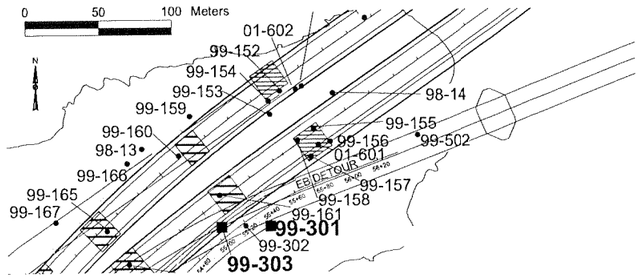

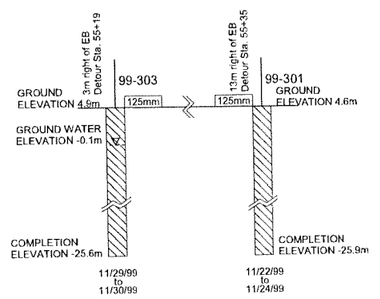

Metric

DIST	COUNTY	ROUTE	KILOMETER POST TOTAL PROJECT	SHEET NO.	TOTAL SHEETS
04	SF	80	12.6/13.2		

REGISTERED GEOTECHNICAL ENGINEER

PLANS APPROVAL DATE

No. GE 2564
Exp. 12-31-08

FUGRO-EARTH MECHANICS,
A JOINT VENTURE.
7700, Edgewater Dr., Ste. 846,
Oakland, CA 94621
(510) 562-8833, FAX (510) 562-8858

The State of California or its officers or agents shall not be responsible for the accuracy or completeness of electronic copies of this plan sheet.

CONTRACT NO. 04-0A2004

CONTRACT CHANGE ORDER NO 90

SHEET 217 OF 227

BORING 99-303

COORDINATES: E1836182 N647412
CA State Plane Zone 3, NAD83, Meters
GROUND ELEVATION: 4.9m (MSL)
START DATE: 11/29/99

STATION: 3m right of EB Detour Sta. 55+19
COMPLETION ELEVATION: -25.6m (MSL)
END DATE: 11/30/99

DEPTH (m)	BLOW COUNT	MATERIAL DESCRIPTION	STRATUM NO.
		GROUND ELEVATION: 4.9m (MSL) (0.0m)	
	25-0	ARTIFICIAL FILL (af) (0.2m) PAVEMENT, Asphalt Concrete over Aggregate Base	II
	95-11 47-0	Fine SAND with gravel (SW), medium dense, light yellowish brown (1.4m)	
	90-93 65-32 78-0 100-29 100-10	FRANCISCAN FORMATION (JKf) 11/30/99▽ (5.0m) SILTSTONE (Rx) and SANDSTONE (Graywacke) (Rx) [2:1], moderately weathered, soft to moderately hard, poorly to moderately indurated, fine to medium grained, intensely fractured -siltstone, 7.6m to 7.9m (9.3m)	III
	80-63 90-40 100-82 100-78 100-50 100-100 100-100 100-95 95-89 100-92 100-82 100-100 100-100 100-69 100-97	SANDSTONE (Graywacke) (Rx), light gray, moderately weathered to fresh, hard, well indurated -very intensely fractured zone at 11.9m -moderately to slightly fractured, 13.7m to 15.5m -siltstone bed dipping 70 degree, 14.8m to 15.1m -hard, very thin to thin healed calcite filled fractures, 16.6m to 22.9m -fine to medium sand sized silstone clasts, 18.3m to 19.8m -sandstone and siltstone laminationed, dipping 50 to 70 degrees, 20.7m to 22.6m -intensely fractured siltstone, 22.6m to 22.9m -very hard to hard rock, 22.9m to 24.4m -fresh unfractured to slightly fractured, below 24.4m -distorted siltstone,intensely fractured and healed with thin calcite filling, 28.3m to 28.5m -siltstone, intensely fractured, dipping 60 to 70 degrees, 28.8m to 29.0m	IV
		TOTAL DEPTH: 30.5m BACKFILLED WITH: Cement Grout	

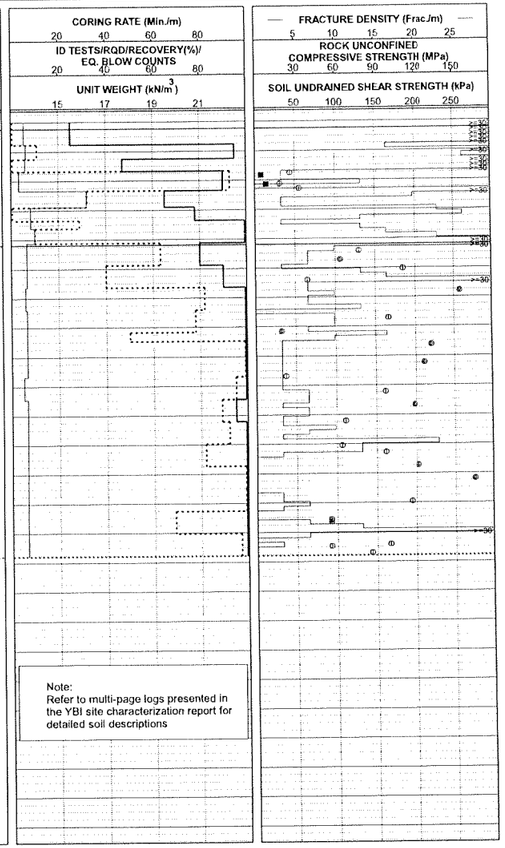

Note:
Refer to multi-page logs presented in the YBI site characterization report for detailed soil descriptions

BORING 99-301

COORDINATES: E1836217 N647412
CA State Plane Zone 3, NAD83, Meters
GROUND ELEVATION: 4.6m (MSL)
START DATE: 11/22/99

STATION: 13m right of EB Detour Sta. 55+35
COMPLETION ELEVATION: -25.9m (MSL)
END DATE: 11/24/99

DEPTH (m)	BLOW COUNT	MATERIAL DESCRIPTION	STRATUM NO.
		GROUND ELEVATION: 4.6m (MSL) (0.0m)	
	95-28 100-76 90-73 100-36 73-41 93-93 95-84 94-81 100-98 100-97 100-83 78-71 100-81 75-29 100-96 85-83 100-100 100-83 100-78 100-76 100-100 100-52 100-77 100-100	FRANCISCAN FORMATION (JKf) SANDSTONE (Graywacke) (Rx), light gray, moderately weathered to fresh, moderately hard to hard, well to moderately indurated, fine to medium grained, intensely fractured -moderately weathered to 2.7m -moderately to slightly weathered, hard, moderately fractured, 2.7m to 4.3m -moderately to very intensely fractured, moderately indurated, 5.8m to 6.8m -slightly weathered, to fresh, hard to very hard, 7.6m to 21.0m -very hard, slightly fractured, thin to moderately thin, 10.7m to 13.3m -intensely fractured zone at 14.0m -fractures, very thin, healed with calcite, dipping 30 to 60 degrees, 15.2m to 18.0m -intensely fractured zone, dipping 35 degrees, 16.5m to 17.1m -intensely fractured, with red oxidation, light green mineralization, slickensided, filled with angular gravel and calcite, 18.6m to 19.2m -healed fracture zone, with calcite filling, offset by fracture dipping 65 degrees, 19.9m to 20.1m -moderately to slightly fractured, dipping 40 to 60 degrees, 22.9m to 25.9m -slickensided fracture surface, dipping 50 degrees, at 23.9m -intensely to moderately fractured, with fine to medium grained siltstone clasts, 25.9m to 27.4m -very slightly fractured below 27.4m -very intensely fractured zone, with angular fragments of fine to medium gravel, calcite filling and oxidation, 28.7m to 29.3m	I
		TOTAL DEPTH: 30.5m BACKFILLED WITH: Cement Grout	

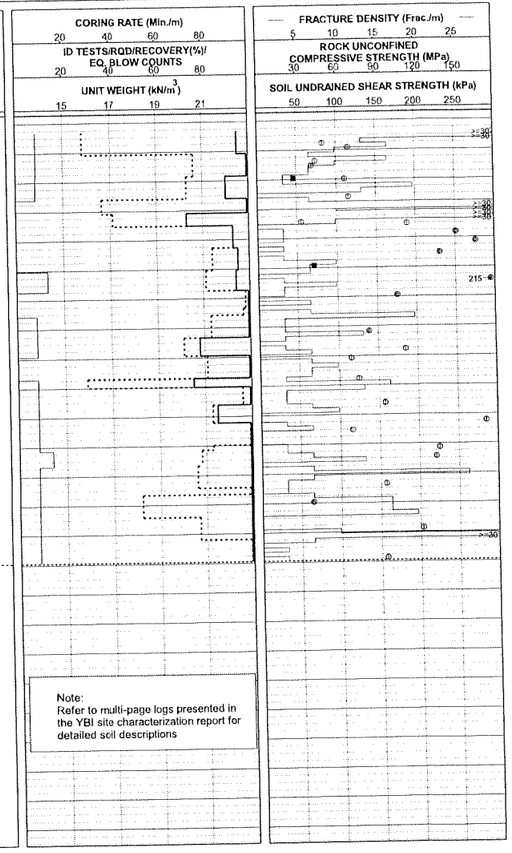

Note:
Refer to multi-page logs presented in the YBI site characterization report for detailed soil descriptions

ROBERT PRICE / SABA MOHAN GEOTECHNICAL DESIGN OVERSIGHT	DRAWN BY	J.PALMER	L.FLUKE FIELD INVESTIGATOR	PREPARED FOR THE STATE OF CALIFORNIA DEPARTMENT OF TRANSPORTATION	M. KAPUSKAR PROJECT ENGINEER
	CHECKED BY	M. KAPUSKAR	DATE SEE ABOVE		

ORIGINAL SCALE IN CENTIMETERS FOR REDUCED PLANS 0 1 2 3 4 5 6 7 8 9 10

CU
EA 0120 R4

BRIDGE NO.	SAN FRANCISCO OAKLAND BAY BRIDGE EAST SPAN SEISMIC SAFETY PROJECT
34-0006 (TEMP)	YBI EAST TIE-IN
KM POST 12.6	LOG OF TEST BORINGS NO. 7
POST MILE	DISREGARD PRINTS BEARING EARLIER REVISION DATES → REVISION DATES (PRELIMINARY STAGE ONLY) SHEET OF

I:\arcmap\projects\yti\tie-in\tie_2007_03_05\tie0dd_yti 18 bore.mxd 03/06/2007

SOIL AND ROCK TYPES

- Well graded GRAVEL (GW)
- Poorly graded GRAVEL (GP)
- GRAVEL with sand (GP or GW)
- GRAVEL with clay (GP or GW)
- Clayey GRAVEL (GC)
- GRAVEL with silt (GP or GW)
- Silty GRAVEL (GM)
- Well graded SAND (SW)
- Poorly graded SAND (SP)
- SAND with gravel (SP or SW)
- SAND with clay (SP-SC)
- Clayey SAND (SC)
- Silty SAND (SM)
- SAND with silt (SP-SM)
- Fat CLAY (CH)
- Sandy fat CLAY (CH)
- Lean CLAY (CL)
- Sandy lean CLAY (CL)
- Silty CLAY (CL-ML)
- Elastic SILT (MH)
- SILT (ML)
- Sandy SILT (ML)
- Clayey silt (ML/CL)
- Highly plastic ORGANICS (OH)
- Low plasticity ORGANICS (OL)
- SANDSTONE (Rx)
- SILTSTONE (Rx)
- CLAYSTONE (Rx)
- Interbedded Rock Strata (Rx)
- PAVEMENT

SAMPLERS

- 76mm-OD, 72mm-ID Thin Walled Tube
- 76mm-OD, 60mm-ID Modified California Liner
- 57mm-OD, 54mm-ID* Thin Walled Driven Tube
- 51mm-OD, 35mm-ID SPT Split Spoon Sampler
- 63.5mm-OD, 54mm-ID Offshore Liner
- Rock Core (Inset symbol represents recovery (%)

* A variable-OD, 54-mm-ID tapered driven tube was used to sample coarse sand, gravel and rock

STANDARD PENETRATION TEST (SPT) AND MODIFIED CALIFORNIA (MC) LINER SAMPLERS

Samplers were driven with a 63.5 kg hammer dropped approximately 760 mm.

20	Number of blows to produce 30 cm of penetration after the initial 15 cm of seating
86/28cm	Number of blows required to produce the indicated penetration after an initial 15 cm seating.
Ref/8cm	50 blows produced the indicated penetration during the initial 15 cm interval.

Note: In rock coring interval recovery(%)-RQD are shown in the Blow Count column.

TUBE AND OFFSHORE LINER SAMPLERS

WOH	Offshore Liner sample advanced with the weight of an 80 kg hammer.
PUSH or SAVE	Pushed thin-walled 76mm-OD-tube.
15/60cm	Number of blows required to produce the indicated penetration using a 54mm-ID-tube sampler. The sampler was driven with an 80 kg downhole hammer dropped approximately 1.5 m.

CLASSIFICATION TESTS BLOW COUNTS AND ROCK QUALITY

- ■ PERCENT PASSING #200 SIEVE
- ● WATER CONTENT (%)
- □ TOTAL UNIT WEIGHT (kN/m³)
- ○ THEORETICAL TOTAL UNIT WEIGHT (kN/m³)
- PLASTIC LIMIT + ····· + LIQUID LIMIT
- ⊗ EQUIVALENT SPT BLOW COUNT = (MC BLOWCOUNT/1.6) OR SPT BLOWCOUNT
- ···· ROCK QUALITY DESIGNATION (RQD)
- —— ROCK RECOVERY PERCENT
- —— ROCK CORING RATE

STRENGTH TESTS

- ⊛ POCKET PENETROMETER
- ◈ TORVANE
- ⊕ REMOTE VANE
- ◆ MINIATURE VANE (◇ RESIDUAL VANE)
- ▲ UNCONSOLIDATED UNDRAINED TRIAXIAL
- ▼ SWEDISH FALL CONE
- ⊠ UNCONFINED COMPRESSION (SOIL)
- ◇△ (Open symbols indicate remolded tests)
- Shear Strength Interpreted from CPT Tip Resistance (Nk = 12-15)
- ⊕ POINT LOAD TEST (ROCK-INTACT SPECIMEN)
- ⊕ POINT LOAD TEST (ROCK-ALONG WEAK PLANE)
- ■ UNCONFINED COMPRESSION (ROCK)
- \+ Soil: Strength Exceeds Capacity of Measuring Device
  Rock: Sample broke along discontinuity; Intact sample would have greater strength
- —— FRACTURE DENSITY (ROCK)

STRENGTH OF COHESIVE SOILS

Consistency	Undrained Shear Strength kPa
Very Soft	less than 12
Soft	12 to 25
Firm	25 to 50
Stiff	50 to 100
Very Stiff	100 to 200
Hard	greater than 200

DENSITY OF GRANULAR SOILS

Descriptive Term	Relative Density (%)*
Very Loose	less than 15
Loose	15 to 35
Modium Dense	35 to 65
Dense	65 to 85
Very Dense	greater than 85

*Estimated from sampler driving record and CPT tip resistance.

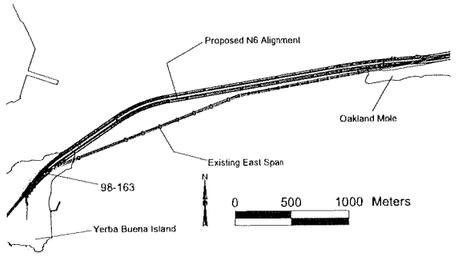

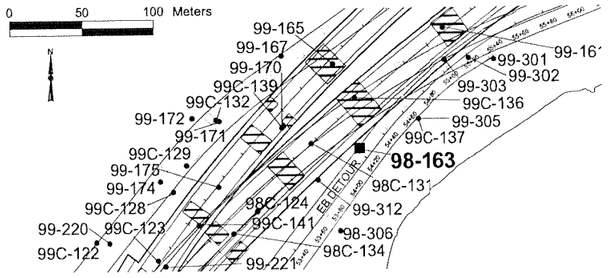

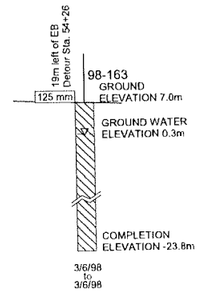

Metric

DIST	COUNTY	ROUTE	KILOMETER POST TOTAL PROJECT	SHEET NO.	TOTAL SHEETS
04	SF	80	12.6/13.2		

REGISTERED GEOTECHNICAL ENGINEER

PLANS APPROVAL DATE

No. GE 2564
Exp. 12-31-08

FUGRO-EARTH MECHANICS,
A JOINT VENTURE
7700, Edgewater Dr., Ste. 846,
Oakland, CA 94621
(510) 562-8833 FAX (510) 562-8858

The State of California or its officers or agents shall not be responsible for the accuracy or completeness of electronic copies of this plan sheet.

BORING 98-163

COORDINATES: E1836122 N647352
CA State Plane Zone 3, NAD83, Meters
GROUND ELEVATION: 7.0m (MSL)
START DATE: 3/6/98

STATION: 19m left of EB Detour Sta. 54+26
COMPLETION ELEVATION: -23.8m (MSL)
END DATE: 3/6/98

DEPTH (m)	ELEVATION (m)	SOIL TYPE	SAMPLER	BLOW COUNT	MATERIAL DESCRIPTION		STRATUM NO.
				Bulk	GROUND ELEVATION: 7.0m (MSL)	(0.0m)	
				18	ARTIFICIAL FILL (af)	(0.1m)	III
				18	Sandy SILT (ML), loose, light brown, dry, poorly graded		
				16	Silty Fine SAND (SM), medium dense, yellowish brown, moist	(0.6m) (1.5m)	IV
				44	Silty Fine SAND (SM), medium dense, dark yellowish brown, moist	(4.6m) (5.8m)	V
				5	Fine SAND (SP), medium dense to dense, brown, moist	Estimated (6.7m)	VI
				9	Gravelly Lean CLAY (CL), firm, gray	(7.7m)	VII
				86/30cm	Silty Fine SAND (SM), loose to medium dense, brown, moist	(9.1m)	
				46	SEDIMENTARY DEPOSITS (Qa) Silty SAND (SM), very dense, brown		VIII
				50/15cm			
				62			
				50/15cm		(16.8m)	
				16	Silty Fine SAND (SM), medium dense, yellowish brown -grading to sandy silt at 17.0m	(18.3m)	IX
				23	Sandy Lean CLAY (CL) to Sandy SILT (ML), very stiff, yellowish brown, moist	(18.9m)	X
				50/10cm	FRANCISCAN FORMATION (JKf) SANDSTONE (Graywacke) (Rx), yellowish brown, predominantly decomposed, moderately soft to moderately hard, poorly to moderately indurated -joint surfaces smooth to slightly rough, moderately to closely spaced, healed with thin fracture filling -moderately weathered, moderately hard, moderately indurated, moderately fractured, with clay filling within joints, 20.6m to 21.3m -gray, with rough joint surfaces dipping predominantly 40 degrees, and angular small, black, siltstone fragments 13 mm long in sandstone matrix, below 22.4m -weathering limited to joints, with healed joints oriented 30 to 40 degrees, and angular small, black, siltstone fragments 13 mm long, below 23.6m	(25.1m)	XI
				100-33			XII
				100-24			
				100-48			
				100-37			
				100-65			XIII
				100-99			
				100-50			
				100-50	SANDSTONE (Graywacke) (Rx) and SILTSTONE (Rx), gray, fresh, moderately hard -weathering limited to joints, well indurated, moderately fractured, moderately to closely spaced fractures with smooth surfaces and thin fracture filling, bedding dipping at approximately 65 degrees -siltstone interbed, at 26.4m	(26.7m)	
					SANDSTONE (Graywacke) (Rx), gray, fresh, hard, well indurated -massive to laminated, with smooth fracture surfaces and clean to very thin fracture infilling, with calcite veins dipping 25 degrees -healed joint dipping 60 degrees, at 28.5m -intensely fractured below 28.5m -horizontal, thin bedding to laminations 3 mm-thick at 29.7m -with 2 healed fractures dipping 40 and 50 degrees, at 30.0m		
					TOTAL DEPTH: 30.8m BACKFILLED WITH: Cement Grout		

CORING RATE (Min./m) 20 40 60 80
ID TESTS/RQD/RECOVERY(%)/ EQ. BLOW COUNTS 20 40 60 80
UNIT WEIGHT (kN/m³) 15 17 19 21

FRACTURE DENSITY (Frac./m) 5 10 15 20 25
ROCK UNCONFINED COMPRESSIVE STRENGTH (MPa) 30 60 90 120 150
SOIL UNDRAINED SHEAR STRENGTH (kPa) 50 100 150 200 250

Note:
Refer to multi-page logs presented in the YBI site characterization report for detailed soil descriptions

CONTRACT NO. 04-0120R4

CONTRACT CHANGE ORDER NO 90

SHEET 218 OF 227

ROBERT PRICE / SABA MOHAN GEOTECHNICAL DESIGN OVERSIGHT	DRAWN BY	A.BROUGHTON	B.SCHELL, S.SICILIANO FIELD INVESTIGATOR DATE SEE ABOVE	PREPARED FOR THE STATE OF CALIFORNIA DEPARTMENT OF TRANSPORTATION	M. KAPUSKAR PROJECT ENGINEER	BRIDGE NO. 34-0006 (TEMP)	SAN FRANCISCO OAKLAND BAY BRIDGE EAST SPAN SEISMIC SAFETY PROJECT
	CHECKED BY	M.KAPUSKAR, S.SICILIANO, S.VARATHARAJ				KM POST 12.6	YBI EAST TIE-IN
					CU EA 0120 R4	POST MILE	LOG OF TEST BORINGS NO. 8

ORIGINAL SCALE IN CENTIMETERS FOR REDUCED PLANS 0 1 2 3 4 5 6 7 8 9 10

DISREGARD PRINTS BEARING EARLIER REVISION DATES →

REVISION DATES (PRELIMINARY STAGE ONLY)	SHEET	OF

CONSISTENCY CLASSIFICATION FOR SOILS

According to the Standard Penetration Test

Penetration Index (Blows / Ft)	Granular	Cohesive
0-4	Very Loose	Very Soft
5-9	Loose	Soft
10-19	Slightly compact	Stiff
20-34	Compact	Very Stiff
35-49	Dense	Hard
>70	Very Dense	Very Hard

NOTE: Classification of earth material as shown on this sheet is based upon field inspection and is not to be construed to imply mechanical analysis.

WEATHERING DESCRIPTORS

Descriptors		Diagnostic features					General characteristic (strength, excavation, etc.) §
		Chemical weathering-Discoloration and/or oxidation		Mechanical weathering-Grain boundary conditions (disaggregation) primarily for granitics and some coarse-grained sediments	Texture and solutioning		
Alphanumeric descriptor	Descriptive term	Body of rock	Fracture surfaces†		Texture	Solutioning	
W1	Fresh	No discoloration, not oxidized	No discoloration or oxidation	No separation, intact (tight)	No change	No solutioning	Hammer rings when crystalline rocks are struck. Almost always rock excavation except for naturally weak or weakly cemented rocks such as siltstones or shales
W2	Slightly weathered to fresh*						
W3	Slightly weathered	Discoloration or oxidation is limited to surface of, or short distance from, fractures; some feldspar crystals are dull	Minor to complete discoloration or oxidation of most surfaces	No visible separation, intact (tight)	Preserved	Minor leaching of some soluble minerals may be noted	Hammer rings when crystalline rocks are struck. Body of rock not weakened. With few exceptions, such as siltstones or shales, classified as rock excavation
W4	Moderately to slightly weathered*						
W5	Moderately weathered	Discoloration or oxidation extends from fractures usually throughout; Fe-Mg minerals are "rusty", feldspar crystals are "cloudy"	All fracture surfaces are discolored or oxidized	Partial separation of boundaries visible	Generally preserved	Soluble minerals may be mostly leached	Hammer rings when crystalline rocks are struck. Body of rock is slightly weakened. Depending on fracturing, usually is rock excavation except in naturally weak rocks such as siltstones or shales
W6	Intensely to moderately weathered*						
W7	Intensely weathered	Discoloration or oxidation throughout; all feldspars and Fe-Mg minerals are altered to clay to some extent; or chemical alteration produces in situ disaggregation, see grain boundary conditions	All fracture surfaces are discolored or oxidized, surfaces friable	Partial separation, rock is friable; in semiarid conditions granitics are disaggregated	Texture altered by chemical disintegration (hydration, argillation)	Leaching of soluble minerals may be complete	Dull sound when struck with hammer, usually can be broken with moderate to heavy manual pressure or by light hammer blow without reference to planes of weakness such as incipient or hairline fractures, or veinlets. Rock is significantly weakened. Usually common excavation.
W8	Very intensely weathered						
W9	Decomposed	Discolored or oxidized throughout, but resistant minerals such as quartz may be unaltered; all feldspars and Fe-Mg minerals are completely altered to clay		Complete separation of grain boundaries (disaggregated)	Resembles a soil, partial or complete remnant rock structure may be preserved, leaching of soluble minerals usually complete		Can be granulated by hand. Always common excavation. Resistant minerals such as quartz may be present as "stringers" or "dikes".

Note: This chart and its horizontal categories are more readily applied to rocks with feldspars and mafic minerals. Weathering in various sedimentary rocks, particularly limestones and poorly indurated sediments, will not always fit the categories established. This chart and weathering categories may have to be modified for particular site conditions or alteration such as hydrothermal effects; however, the basic framework and similar descriptors are to be used.

* Combination descriptors are permissible where equal distribution of both weathering characteristics are present over significant intervals or where characteristics present are "in between" the diagnostic feature. However, dual descriptors should not be used where significant, identifiable zones can be delineated. When given as a range, only two adjacent terms may be combined (i.e., decomposed to lightly weathered or moderately weathered to fresh) are not acceptable.

† Does not include directional weathering along shears or faults and their associated features. For example, a shear zone that carried weathering to great depths into a fresh rock mass would not require the rock mass to be classified as weathered.

§ These are generalizations and should not be used as diagnostic features for weathering or excavation classification. These characteristics vary to a large extent based on naturally weak materials or cementation and type of excavation.

ROCK HARDNESS/ STRENGTH DESCRIPTORS

Alphanumeric descriptor	Descriptor	Criteria
H1	Extremely hard	Core, fragment, or exposure cannot be scratched with knife or sharp pick; can only be chipped with repeated heavy hammer blows.
H2	Very hard	Cannot be scratched with knife or sharp pick. Core of fragment breaks with repeated heavy hammer blows.
H3	Hard	Can be scratched with knife or sharp pick with difficulty (heavy pressure). Heavy hammer blow required to break specimen.
H4	Moderately hard	Can be scratched with knife or sharp pick with light or moderate pressure. Core or fragment breaks with moderate hammer blow.
H5	Moderately soft	Can be grooved 1/16 inch (2 mm) deep by knife or sharp pick with moderate or heavy pressure. Core or fragment breaks with light hammer blow or heavy manual pressure.
H6	Soft	Can be grooved or gouged easily by knife or sharp pick with light pressure, can be scratched with fingernail. Breaks with light to moderate manual pressure.
H7	Very soft	Can be readily indented, grooved or gouged with fingernail, or carved with a knife. Breaks with light manual pressure.

Any bedrock unit softer than H7, very soft, is to be described using USBR 5000 consistency descriptors.

Note: Although "sharp pick" is included in these definitions, descriptions of ability to be scratched, grooved or gouged by a knife is the preferred criteria

FRACTURE DENSITY

FRACTURE DENSITY - Based on the spacing of all natural fractures in an exposure or core recovery lengths in boreholes; excludes mechanical breaks, shears, and shear zones; however, shear-distributed zones (fracturing outside the shear) are included. Descriptors for fracture density apply to all rock exposures such as tunnel walls, dozer trenches, outcrops, or foundation cut slopes and inverts, as well as boreholes. Descriptive criteria presented below are based on borehole cores where lengths are measured along the core axis, for other exposures the criteria is distance measured between fractures (size of blocks).

UNFRACTURED (FD0) : No fractures.

VERY SLIGHTLY FRACTURED (FD1) : Core recovered mostly in lengths greater than 3 feet (1 m).

SLIGHTLY TO VERY SLIGHTLY FRACTURED (FD2)*

SLIGHTLY FRACTURED (FD3) : Core recovered mostly in lengths from 1 to 3 feet (300 to 1000 mm) with few scattered lengths less than 1 foot (300 mm) or greater than 3 feet (1000 mm).

MODERATELY TO SLIGHTLY FRACTURED (FD4)*

MODERATELY FRACTURED (FD5) : Core recovered mostly in 0.3 to 1.0 foot (100 to 300 mm) lengths with most lengths about 0.6 foot (200 mm)

INTENSELY TO MODERATELY FRACTURED (FD6)*

INTENSELY FRACTURED (FD7) : Lengths average from 0.1 to 0.3 foot (30 to 100 mm) with scattered fragmented intervals. Core recovered mostly in lengths less than 0.3 foot (100 mm).

VERY INTENSELY TO INTENSELY FRACTURED (FD8)*

VERY INTENSELY FRACTURED (FD9) : Core recovered mostly as chips and fragments with a few scattered short core lengths.

* Combinations of fracture densities (e.g. Very Intensely to Intensely Fractured or Moderately to Slightly Fractured) are used where equal distribution of both fracture density characteristics are presently over a significant interval or exposure, or where characteristics are "in between" the descriptor definitions.

DIVISION OF ENGINEERING SERVICES - OFFICE OF GEOTECHNICAL SERVICES

As-Built Log of Test Borings sheet is considered an informational document only. As such, the State of California registration seal with signature, license number and registration certificate expiration date confirm that this is a true and accurate copy of the original document. It does not attest to the accuracy or validity of the information contained in the original document. This drawing is available and presented only for the convenience of any bidder, contractor or other interested party.

DIST.	COUNTY	ROUTE	KILOMETER POST - TOTAL PROJECT	Sheet No.	Total Sheets
04	SF, Ala	80	12.6 / 13.2		

REGISTERED ENGINEER - CIVIL

REGISTERED PROFESSIONAL ENGINEER
MIKE KAPUSKAR
NO. GE 2364
EXP. 12-31-08
GEOTECHNICAL
STATE OF CALIFORNIA

YBI EAST TIE-IN

LOG OF TEST BORINGS NO. 9

NOTE: A COPY OF THIS LOG OF TEST BORINGS IS AVAILABLE AT OFFICE OF STRUCTURE MAINTENANCE AND INVESTIGATIONS, SACRAMENTO, CALIFORNIA

CU: 04
EA: 0120R4

Bridge No.
34-0006 (TEMP)

Revisions made to this Log of Test Borings from the original 1997 Log of Test Borings are the addition of the following note:

Note:
1. Elevations shown on these plans are in feet and referred to Mean Lower Low Water (MLLW) Datum. MLLW Datum is 3.09 feet (0.942 m ±) lower than Mean Sea Level (MSL) Datum of 1929.

BENCH MARK

BM 9 Elev. 25.0
U.S. Coast AND GEODETIC SURVEY, (MLLW, 1960)
BM V52N Elev. 154.979
FD. BRASS PLUG, 1980, (NAD MLLW), 1933

DIST.	COUNTY	ROUTE	POST MILES TOTAL PROJECT	SHEET NO.	TOTAL SHEETS
04	Ala	80			

REGISTERED ENGINEERING GEOLOGIST

REGISTERED GEOLOGIST
R.W. FOX
No. 78
Exp. 8-31-97
CERTIFIED ENGINEERING GEOLOGIST
STATE OF CALIFORNIA

PLANS APPROVAL DATE

The State of California or its officers or agents shall not be responsible for the accuracy or completeness of electronic copies of this plan sheet.

CONTRACT NO. 04-0120R4

CONTRACT CHANGE ORDER NO 90

SHEET 219 OF 227

PLAN
1" = 80'

BEDDING, FOLIATION, OR FLOW TEXTURE DESCRIPTORS

Descriptors	Thickness / Spacing
Massive	Greater than 10 ft (3 m)
Very thickly (bedded, foliated, or banded)	3 to 10 ft (1 to 3 m)
Thickly	1 to 3 ft (300 mm to 1 m)
Moderately	0.3 to 1 ft (100 to 300 mm)
Thinly	0.1 to 0.3 ft (30 to 100 mm)
Very thinly	0.03 (3/8 in) to 0.1 ft (10 to 30 mm)
Laminated (Intensely foliated or banded)	Less than 0.03 ft (3/8 in) (<10 mm)

RQD LOGGING

$$RQD = \frac{\sum \text{LENGTH OF SOUND CORE PIECES} > 4 \text{ INCHES (100 mm)}}{\text{TOTAL CORE RUN LENGTH}}$$

$$RQD = \frac{10 + 7.5 + 8}{48} \times 100\%$$

RQD = 53% (FAIR)

RQD (ROCK QUALITY DESIGNATION)	DESCRIPTION OF ROCK QUALITY
0 - 25%	VERY POOR
25 - 50%	POOR
50 - 75%	FAIR
75 - 90%	GOOD
90 - 100%	EXCELLENT

after Deere & Deere, 1989

NOTES

1. All elevations shown refer to Mean Lower Low Water (M.L.L.W.) Datum = 0.0. To convert M.L.L.W. elevations to Mean Sea Level (M.S.L.) Datum of 1929, add 3.1 feet.

2. All Standard Penetration Tests for borings 95-1 through 95-6 were performed using N-size rod.

3. Rock Quality Designation, Weathering, Hardness, Fracture Density and Bedding Thickness descriptors, as shown on this plate, were used to describe all rock core from borings drilled in 1995. Descriptors were determined in the field in accordance with the United States Department of the Interior, Bureau of Reclamation, Engineering Geology, Field Manual.

4. Rock Quality Designation (RQD) was logged using HQ size core diameter at borings 95-1 and 95-2. NX-size core diameter was used at borings 95-3, 95-4, and 95-5. RQD was logged using Bx size core diameter at boring 95-6, Both core recovery and RQD may be slightly lower than Nx and HQ size core diameter.

5. Shear wave velocity data and reports for borings 95-1, 95-2, 95-3, 95-4, 95-5, and 95-6 are available for review through the Engineering Service Center, Office of Structural Foundations, Geotechnical Support Branch, at the Transportation Laboratory, 5900 Folsom Blvd., Sacramento, CA 95819.

6. Test data for soils and rock from boring 95-1, 95-2, 95-3, 95-5, and 95-6 are available for review through the Engineering Service Center, Office of Structural Foundations, Geotechnical Support Branch, at the Transportation Laboratory, 5900 Folsom Blvd., Sacramento, CA 95819.

7. Dilatometer (DT) data for tests performed at borings 95-3, 95-4, 95-5, and 95-6 are available for review through the Engineering Service Center, Office of Structural Foundations, Structure Foundations Branch, at the Transportation Laboratory, 5900 Folsom Blvd., Sacramento, CA 95819.

8. Soil description / modifier: Trace = < 5%
Some = < 5-12%
With = > 12%

ENGINEERING SERVICE CENTER	STRUCTURE FOUNDATIONS	FIELD INVESTIGATION BY:	State of CALIFORNIA DEPARTMENT OF TRANSPORTATION	DIVISION OF STRUCTURES STRUCTURE DESIGN	BRIDGE NO. 33-0025	SAN FRANCISCO–OAKLAND BAY BRIDGE
DRAWN BY	Irma Gamama 9/95	M. LUQMAN / T. CROSBY			POST MILE 1.15	EARTHQUAKE RETROFIT PROJECT NO. 2
CHECKED BY	11/2/95			CU: 04 EA: 043441		LOG OF TEST BORINGS 1 OF 17

ORIGINAL SCALE IN INCHES FOR REDUCED PLANS → 0 1 2 3

DISREGARD PRINTS BEARING EARLIER REVISION DATES →

REVISION DATES (PRELIMINARY STAGE ONLY): 10-10-95, 11-8-95, 12-28-95, 1/1/96

SHEET 33 OF 49

DIST.	COUNTY	ROUTE	POST MILES TOTAL PROJECT	SHEET NO.	TOTAL SHEETS
04	SF	80			

R.W. Fox
REGISTERED ENGINEERING GEOLOGIST

REGISTERED GEOLOGIST
R.W. FOX
No. 78
Exp. 8-31-97
CERTIFIED ENGINEERING GEOLOGIST
STATE OF CALIFORNIA

PLANS APPROVAL DATE

The State of California or its officers or agents shall not be responsible for the accuracy or completeness of electronic copies of this plan sheet.

FOR PLAN VIEW SEE "LOG OF TEST BORINGS 1 OF 17"

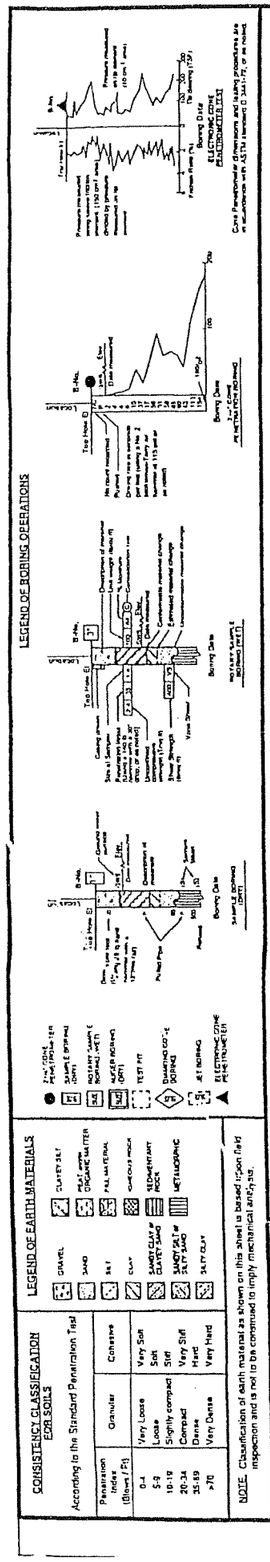

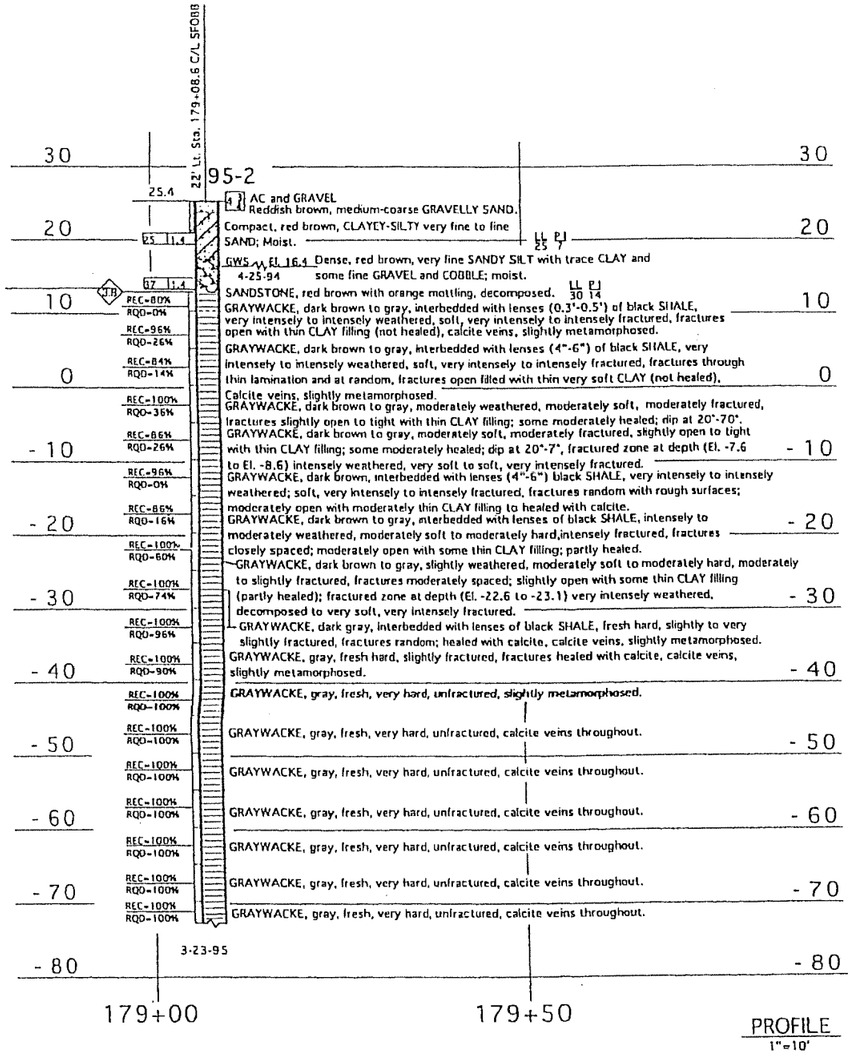

PROFILE
1"=10'

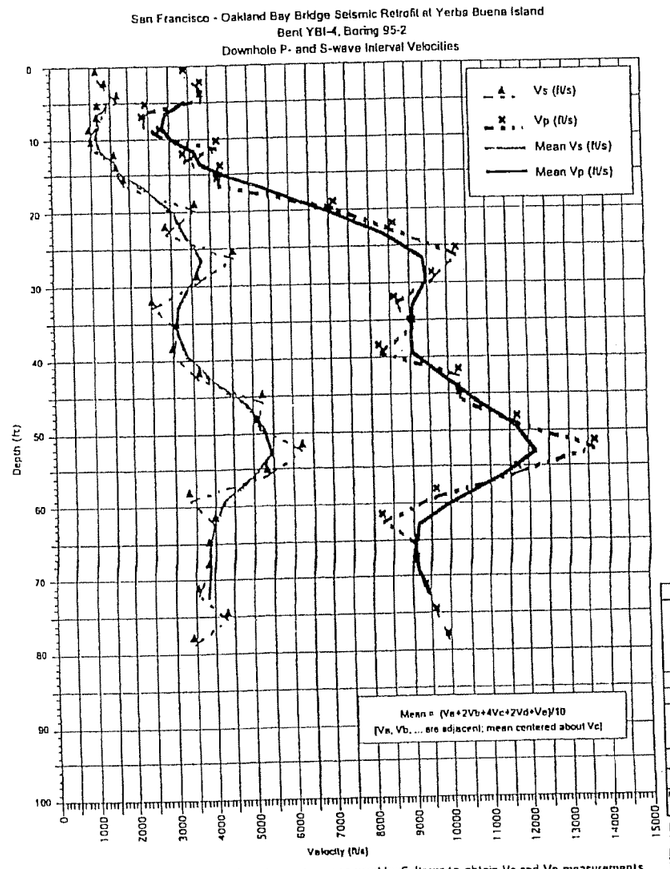

An OYO Model 170 Suspension Logging system was used by Caltrans to obtain Vs and Vp measurements.

CONTRACT NO. 04-0120R4
CONTRACT CHANGE ORDER NO 90
SHEET 220 OF 222

DIVISION OF ENGINEERING SERVICES - OFFICE OF GEOTECHNICAL SERVICES

As-Built Log of Test Borings sheet is considered an informational document only. As such, the State of California registration seal with signature, license number and registration certificate expiration date confirm that this is a true and accurate copy of the original document. It does not attest to the accuracy or validity of the information contained in the original document. This drawing is available and presented only for the convenience of any bidder, contractor or other interested party.

DIST.	COUNTY	ROUTE	KILOMETER POST - TOTAL PROJECT	Sheet No.	Total Sheets
04	SF, Ala	80	12.6 / 13.2		

REGISTERED ENGINEER - CIVIL

YBI EAST TIE-IN

LOG OF TEST BORINGS NO. 10

NOTE: A COPY OF THIS LOG OF TEST BORINGS IS AVAILABLE AT OFFICE OF STRUCTURE MAINTENANCE AND INVESTIGATIONS, SACRAMENTO, CALIFORNIA

CU: 04
EA: 0120R1

Bridge No. 34-0006 (TEMP)

Revisions made to this Log of Test Borings from the original 1997 Log of Test Borings are the addition of the following notes:

Notes:
1. Refer to Log of Test Borings No. 9 for borehole locations and elevation datum.
2. Stations, dimensions and elevations shown on this plan are in English units.

REGISTERED PROFESSIONAL ENGINEER
MIKE KAPUSKAR
NO. GE 2364
EXP. 12-31-08
GEOTECHNICAL
STATE OF CALIFORNIA

ENGINEERING SERVICE CENTER	STRUCTURE FOUNDATIONS
DRAWN BY	Eddie Fong 9/95
CHECKED BY	11/2/95

FIELD INVESTIGATION BY:
M. LUQMAN & T. CROSBY

State of CALIFORNIA
DEPARTMENT OF TRANSPORTATION

DIVISION OF STRUCTURES
STRUCTURE DESIGN

CU: 04
FA: 043441

BRIDGE NO. 33-0025
POST MILE 1.15

DISREGARD PRINTS BEARING EARLIER REVISION DATES →

REVISION DATES (PRELIMINARY STAGE ONLY)
11-8-95 | 12-29-95 | 1/1/97

ORIGINAL SCALE IN INCHES FOR REDUCED PLANS → 0 1 2 3

SAN FRANCISCO-OAKLAND BAY BRIDGE
EARTHQUAKE RETROFIT PROJECT NO. 2
LOG OF TEST BORINGS 3 OF 17

SHEET 35 OF 49

DIST.	COUNTY	ROUTE	POST MILES TOTAL PROJECT	SHEET NO.	TOTAL SHEETS
04	Ala	80			

REGISTERED ENGINEERING GEOLOGIST

PLANS APPROVAL DATE

REGISTERED GEOLOGIST R.W. FOX No. 78 Exp. 8-31-97 CERTIFIED ENGINEERING GEOLOGIST STATE OF CALIFORNIA

The State of California or its officers or agents shall not be responsible for the accuracy or completeness of electronic copies of this plan sheet.

CONTRACT NO. 04-0120R4

CONTRACT CHANGE ORDER NO. 90

SHEET 221 OF 227

FOR PLAN VIEW, SEE "LOG OF TEST BORINGS 1 OF 17"

CONSISTENCY CLASSIFICATION FOR SOILS

According to the Standard Penetration Test

Penetration Index (Blows / Ft)	Granular	Cohesive
0-4	Very Loose	Very Soft
5-9	Loose	Soft
10-19	Slightly compact	Stiff
20-34	Compact	Very Stiff
35-69	Dense	Hard
>70	Very Dense	Very Hard

NOTE: Classification of earth material as shown on this sheet is based upon field inspection and is not to be construed to imply mechanical analysis.

80' Rt. Sta. 181+89 C/L SFOBB

95-4

17.4

A C, Fill

GRAYWACKE, yellow-gray, decomposed.

2.9

GWS El 9.9 4-22-95

Elev.	Core	Description
10	REC=100% RQD=52%	GRAYWACKE: gray-green, intensely weathered, moderately hard to hard, intensely to moderately fractured, fractures close to slightly open; fractures random and through foliation at dip 40°-50°, slightly metamorphosed.
	REC=100% RQD=70%	GRAYWACKE: gray-green, intensely to moderately weathered, moderately hard, intensely fractured, fractures closed, mechanical breaks through foliation with smooth surface at dip 40°-60°, calcite veins, slightly metamorphosed.
0 (DT)	REC=100% RQD=85%	GRAYWACKE: gray, slightly to moderately weathered, hard, intensely to moderately fractured, fractures tightly close to slightly open with rough to smooth surfaces at dip ≈50°, calcite veins, very slightly metamorphosed.
	REC=100% RQD=70%	GRAYWACKE: gray, moderately weathered, hard, intensely to moderately fractured, fractures with smooth to rough surface at dip 50°-45°, very slightly metamorphosed.
-10	REC=100% RQD=98%	GRAYWACKE: gray, slightly weathered to fresh, hard to very hard, slightly fractured, fractures closed, calcite veins, slightly metamorphosed.
(DT)	REC=100% RQD=100%	GRAYWACKE: gray, slightly weathered to fresh, hard to very hard, slightly fractured, fractures closed; dip at 50°-45°, calcite veins, slightly metamorphosed.
-20	REC=100% RQD=100%	GRAYWACKE: gray, fresh, very hard, unfractured, calcite vein, slightly metamorphosed.
	REC=100% RQD=100%	GRAYWACKE: gray, fresh, very hard, very slightly fractured, calcite veins, slightly metamorphosed.
-30	REC=100% RQD=98%	GRAYWACKE: gray, slightly weathered to fresh, hard to very hard, slightly to very slightly fractured, fractures dip at 45°-50°, calcite veins, slightly metamorphosed.
(DT)	REC=100% RQD=93%	GRAYWACKE: gray, slightly weathered to fresh, very hard, slightly fractured, mechanical breaks through foliation at dip 50°-60°, calcite veins, slightly metamorphosed.
-40	REC=100% RQD=82%	GRAYWACKE: gray, slightly weathered to fresh, hard to very hard, moderately fractured, fractures closely spaced with rough surfaces; 2"-3" fracture zones; mechanical breaks through foliations at dip 45°-50°, calcite veins, slightly metamorphosed.
	REC=100% RQD=73%	GRAYWACKE: gray, slightly weathered to fresh, hard to very hard, slightly fractured, fractures random with rough surfaces; 6" fractures zones slightly open; mechanical breaks through foliation, calcite veins, slightly metamorphosed.
-50 (DT)	REC=100% RQD=100%	GRAYWACKE: gray, fresh, hard to very hard, very slightly fractured, mechanical breaks through foliation at dip 40°, calcite veins, slightly metamorphosed.
	REC=100% RQD=89%	GRAYWACKE: gray, fresh, hard to very hard, very slightly fractured, mechanical breaks through foliation and random; fractures with rough surfaces and at dip 15°-40°.
-60	REC=100% RQD=37%	GRAYWACKE: gray, slightly weathered to fresh, moderately hard to hard, intensely to moderately fractured, 2" fracture zones; fractures closely spaced; random with rough surfaces; dip at 30°, mechanical breaks through foliation, calcite veins, slightly metamorphosed.
(DT)	REC=100% RQD=77%	GRAYWACKE: gray, slightly weathered to fresh, moderately hard to hard, intensely fractured, 6" fractured zones healed to moderately open; with rough surfaces; mechanical breaks through foliation, calcite veins, slightly metamorphosed.
-70	REC=100% RQD=69%	GRAYWACKE: gray, slightly weathered to fresh, hard to very hard, intensely fractured, fractured zones healed to slightly open; fractures through foliation; calcite veins, slightly metamorphosed.
	REC=100% RQD=14%	Interbedded GRAYWACKE and SHALE. GRAYWACKE: gray, slightly weathered, moderately hard, 2.8" fractured zones, slightly foliated, calcite veins. SHALE: black, moderately soft to firm, 2.2" intensely fractured to sheared zones, slightly metamorphosed, calcite veins
-80		SHALE, black, moderately weathered, hard to very hard, slightly fractured.
(DT)	REC=100% RQD=46%	Interbedded GRAYWACKE and SHALE. GRAYWACKE: gray, hard to very hard, moderately fractured, fractures random with smooth surfaces; dip at 20°-50°; slightly foliated. SHALE: black, slightly weathered, firm to moderately soft, intensely fractured.
-90 (DT)	REC=100% RQD=57%	Interbedded GRAYWACKE and SHALE. GRAYWACKE: gray, slightly weathered, very hard, moderately fractured, fractures random with 2"-4" fracture zone; dip at 42°-50°, calcite veins, slightly metamorphosed. SHALE: black, slightly weathered, moderately fractured slightly metamorphosed.
	REC=100% RQD=87%	SHALE, interbedded with GRAYWACKE. SHALE: black, slightly weathered to fresh, hard, moderately fractured, thinly laminated, fractures through bedding at dip 45°. GRAYWACKE: gray, fresh, very hard, unfractured, calcite veins, slightly metamorphosed.
-100	REC=90% RQD=36%	SHALE, interbedded with GRAYWACKE. SHALE: black, intensely weathered, very soft, very intensely fractured, calcite veins. GRAYWACKE: gray, slightly weathered, moderately hard, moderately fractured.
(DT)	REC=96% RQD=96%	GRAYWACKE, gray, interbedded with lenses of black SHALE, slightly weathered, moderately hard, intensely fractured, fractures healed with calcite, calcite veins, slightly metamorphosed. SHALE: Black, intensely weathered, moderately soft to soft, intensely fractured.
-110	REC=100% RQD=85%	GRAYWACKE, gray, interbedded with lenses of black SHALE, slightly weathered to fresh, hard, moderately to slightly fractured, fractures random and through foliation; dip at 10°-30°; fractures close, slightly metamorphosed.
(DT)	REC=98% RQD=80%	GRAYWACKE, gray, interbedded with lenses of black SHALE, slightly weathered to fresh, hard to very hard, moderately fractured, fractures random and through foliation; intense fractured zones in SHALE, calcite veins, slightly metamorphosed.
-120	REC=100% RQD=95%	GRAYWACKE, gray, interbedded with lenses of black SHALE, slightly weathered to fresh, hard to very hard, moderately to slightly fractured, fractured zones closed; fractures smooth to rough surfaces; dip at 40°-45°, calcite veins, slightly metamorphosed.
(DT)	REC=100% RQD=76%	GRAYWACKE, gray, interbedded with lenses of black SHALE, slightly weathered to fresh, hard to very hard, moderately slightly fractured, intense fractured zones in SHALE; fractures tightly closed; calcite veins, slightly metamorphosed.
-130	REC=100% RQD=94%	Interbedded GRAYWACKE and SHALE. GRAYWACKE: gray, moderately weathered, moderately hard to hard, moderately fractured, fractures closed; calcite veins, slightly metamorphosed. SHALE: black, moderately weathered, intensely fractured, organic odor.
(DT)	REC=96% RQD=84%	GRAYWACKE, gray, slightly weathered to fresh, hard, moderately to intensely fractured, fractures closed to slightly open, calcite veins, slightly metamorphosed.
-140		4-20-95

182+00 182+50

PROFILE

San Francisco - Oakland Bay Bridge Seismic Retrofit at Yerba Buena Island
Pier E1, Boring 95-4
Downhole P- and S-wave Interval Velocities

An OYO Model 170 Suspension Logging System was used by Caltrans to obtain Vs and Vp measurements.

DIVISION OF ENGINEERING SERVICES - OFFICE OF GEOTECHNICAL SERVICES

As-Built Log of Test Borings sheet is considered an informational document only. As such, the State of California registration seal with signature, license number and registration certificate expiration date confirm that this is a true and accurate copy of the original document. It does not attest to the accuracy or validity of the information contained in the original document. This drawing is available and presented only for the convenience of any bidder, contractor or other interested party.

DIST.	COUNTY	ROUTE	KILOMETER POST - TOTAL PROJECT	Sheet No.	Total Sheets
04	SF, Ala	80	12.6 / 13.2		

REGISTERED ENGINEER - CIVIL

YBI EAST TIE-IN

LOG OF TEST BORINGS NO. 11

NOTE: A COPY OF THIS LOG OF TEST BORINGS IS AVAILABLE AT OFFICE OF STRUCTURE MAINTENANCE AND INVESTIGATIONS, SACRAMENTO, CALIFORNIA — CU: 04 EA: 0120R1 — Bridge No. 34-0006 (TEMP)

Revisions made to this Log of Test Borings from the original 1997 Log of Test Borings are the addition of the following notes:

Notes:
1. Refer to Log of Test Borings No. 9 for borehole locations and elevation datum.
2. Stations, dimensions and elevations shown on this plan are in English units.

REGISTERED PROFESSIONAL ENGINEER MIKE KAPUSKAR NO. GE 2364 EXP. 12-31-08 GEOTECHNICAL STATE OF CALIFORNIA

ENGINEERING SERVICE CENTER	STRUCTURE FOUNDATIONS	FIELD INVESTIGATION BY:	State of CALIFORNIA DEPARTMENT OF TRANSPORTATION	DIVISION OF STRUCTURES STRUCTURE DESIGN	BRIDGE NO. 33-0025 POST MILE 1.15
DRAWN BY	9-95	M. LUQMAN & T. CROSBY			
CHECKED BY	1/2/95				

SAN FRANCISCO–OAKLAND BAY BRIDGE

EARTHQUAKE RETROFIT PROJECT NO. 2

LOG OF TEST BORINGS

5 OF 17

ORIGINAL SCALE IN INCHES FOR REDUCED PLANS 0 1 2 3

CU: 04 EA: 043441

DISREGARD PRINTS BEARING EARLIER REVISION DATES

REVISION DATES (PRELIMINARY STAGE ONLY)

SHEET 37 OF 49

CONSISTENCY CLASSIFICATION FOR SOILS

According to the Standard Penetration Test

Penetration Index (Blows / Ft)	Granular	Cohesive
0-4	Very Loose	Very Soft
5-9	Loose	Soft
10-19	Slightly compact	Stiff
20-34	Compact	Very Stiff
35-59	Dense	Hard
>70	Very Dense	Very Hard

LEGEND OF EARTH MATERIALS

GRAVEL, SAND, SILT, CLAY, SANDY CLAY or CLAYEY SAND, SANDY SILT or SILTY SAND, SILTY CLAY, CLAYEY SILT, PEAT and/or ORGANIC MATTER, FILL MATERIAL, IGNEOUS ROCK, SEDIMENTARY ROCK, METAMORPHIC

NOTE: Classification of earth material as shown on this sheet is based upon field inspection and is not to be construed to imply mechanical analysis.

LEGEND OF BORING OPERATIONS

FOR PLAN VIEW, SEE "LOG OF TEST BORINGS 1 OF 17"

San Francisco - Oakland Bay Bridge Seismic Retrofit at Yerba Buena Island
Pier E1, Boring 95-5
Downhole P- and S-wave Interval Velocities

An OYO Model 170 Suspension Logging System was used by Caltrans to obtain Vs and Vp measurements.

47' Lt. Sta. 182+59 C/L SFOBB

95-5

69.2

A C and GRAVEL

Very loose, brown, SILTY fine SAND, moist (fill).
Slightly compact, gray, GRAVEL, moist.
Very dense, gray, decomposed, GRAYWACKE, dry.

Interbedded GRAYWACKE and SHALE. GRAYWACKE: gray, intensely to moderately weathered, moderately hard to hard, moderately fractured, fractures open and random. SHALE: black, intensely to moderately weathered, moderately hard, intensely fractured.
Interbedded GRAYWACKE and SHALE (4"). GRAYWACKE: gray, slightly moderately weathered, hard, moderately fractured. SHALE: black, moderately to intensely weathered, moderately hard, intensely fractured, fractured open.
GRAYWACKE: gray, interbedded with lenses (2"-4") of black SHALE, moderately to slightly weathered, moderately hard, moderately fractured, fractures open, calcite veins.
GRAYWACKE: gray, interbedded with lenses (~3") of black SHALE, slightly weathered to fresh, hard to very hard, moderately to slightly fractured, fractures random; close to slightly open at dip >5°, calcite veins, slightly metamorphosed.

GRAYWACKE: gray, interbedded with lenses (3") of black SHALE, moderately to slightly weathered, hard to very hard, moderately to slightly fractured, fractures closed, calcite veins, slightly metamorphosed.
GRAYWACKE: gray, interbedded with lenses (2"-8") of black SHALE, moderately to slightly weathered, hard to very hard, slightly fractured, fractures slightly open; random; with rough surfaces, calcite veins, slightly metamorphosed.
GRAYWACKE: gray, interbedded with lenses (6") of black SHALE, slightly weathered to fresh, very hard, slightly fracture, fractures random, rough and closed, mechanical breaks through foliation, calcite veins, slightly metamorphosed.
GRAYWACKE: gray, interbedded with lenses (6") of black SHALE, very slightly weathered to fresh, very hard, slightly fractured, fractures through foliations and bedding contact, fractures random; rough; slightly open to close.
GRAYWACKE: gray, interbedded with lenses of black SHALE, very slightly weathered to fresh, very hard, slightly fractured, mechanical fracture random; slightly open to close; calcite veins, slightly metamorphosed

GRAYWACKE: gray, with black SHALE inclusion, fresh, very hard, unfractured, calcite veins.

Interbedded GRAYWACKE and SHALE. GRAYWACKE: gray, fresh, very hard, slightly fractured, fractures tightly closed; calcite veins, slightly metamorphosed. SHALE: black, fresh, hard, moderately fractured through thinly laminated, layers.
Interbedded GRAYWACKE and SHALE. GRAYWACKE: gray, fresh, very hard, very slightly fractured, fractures at dip 30°-45°, smooth to rough; calcite veins, slightly metamorphosed. SHALE: black, fresh, hard, slightly fractured through thin laminations at dip 0°-5°.

GRAYWACKE: gray, fresh, very hard, unfractured, mechanical breaks through veins, calcite veins, slightly metamorphosed.
GRAYWACKE: gray, interbedded with black SHALE, fresh, very hard, very slightly fractured, fractures through shaley laminations at dip 30°, calcite veins.
GRAYWACKE: gray, interbedded with lenses of SHALE, fresh, very hard, slightly fractured, mechanical breaks through foliations in smooth to rough surface at dip 30°, calcite veins, slightly metamorphosed.
GRAYWACKE: gray, fresh, very hard, slightly to very slightly fractured, fracture: healed with calcite, fractures through foliations in smooth to rough surfaces at dip 30°-35°, calcite veins, slightly metamorphosed.

GRAYWACKE: gray, fresh, very hard, unfractured, mechanical breaks through calcite veins, slightly metamorphosed.
GRAYWACKE: gray, fresh, hard to very hard, very slightly fractured, fractures healed with calcite, mechanical breaks through foliations in smooth to rough surfaces at dip 40°, calcite veins, slightly metamorphosed.
Interbedded GRAYWACKE and SHALE. GRAYWACKE: gray, fresh, very slightly fractured at random, calcite veins, slightly foliated. SHALE: black, fresh, hard, intensely fractured, thinly laminated, calcite veins
GRAYWACKE: gray, interbedded with lenses of SHALE, fresh, moderately hard to hard, fractured through SHALE lenses, fractures open to slightly closed at random; fractures dip at 30°-40°, calcite veins, slightly metamorphosed.
SHALE, black, interbedded with lens of GRAYWACKE, fresh, moderately hard to hard, moderately fractured at dip 45°-65°, calcite veins, slightly metamorphosed.
GRAYWACKE, gray, interbedded with lenses (3") of black SHALE, fresh, hard to very hard, moderately to slightly fractured, fractures open to slightly open at dip 40°-65°, calcite vein, slightly metamorphosed.
GRAYWACKE, gray, interbedded with lenses of black SHALE, fresh, very hard, moderately fractured, fractures open to slightly open at dip 40°-65°, calcite vein, slightly metamorphosed.
GRAYWACKE, gray, interbedded with lenses of black SHALE, fresh, very hard, moderately fractured, fractures open to closed, calcite veins, slightly metamorphosed.

GRAYWACKE, gray, slightly weathered to fresh, hard to very hard, moderately fractured, fractures through foliation at random; fractures smooth to rough; tightly closed to slightly open, calcite veins, slightly metamorphosed.
GRAYWACKE, gray wake, moderately weathered, moderately hard to hard, moderately fractured, fractures through veins; fractures open to slightly close; smooth to rough at dip 10°-50°, calcite veins, slightly metamorphosed.
GRAYWACKE, gray with lenses of black SHALE, fresh, hard, slightly fractured, fractures open to healed with calcite; dip at 10°-45°, calcite veins, slightly foliated.
GRAYWACKE, gray, fresh, very hard, unfractured, random mechanical breaks, calcite veins, slightly metamorphosed.

GRAYWACKE, gray, fresh, very hard, unfractured, random mechanical breaks, calcite veins, very slightly metamorphosed.

GRAYWACKE, gray with lenses of black SHALE, fresh, very hard, very slightly fractured, fractures through foliation/bedding; very slightly open to healed with calcite; dip at 30°-45°, calcite veins, slightly metamorphosed.
GRAYWACKE, gray, fresh, very hard, moderately to slightly fractured, fractures through foliation/bedding at random; fractures slightly open; dip at 30°-50°, calcite veins, slightly metamorphosed.
GRAYWACKE, gray, fresh, very hard, unfractured, mechanical breaks through foliation/bedding @ dip 0°-30°, calcite vein, slightly metamorphosed.

GRAYWACKE, gray, fresh, very hard, moderately fractured, fractures very slightly open; mechanical breaks through foliation/bedding at dip 15°-50°, calcite vein, slightly metamorphosed.
GRAYWACKE, gray with lenses of black SHALE, fresh, hard, slightly fractured, fractures tight and healed with calcite; mechanical breaks through foliation/bedding, calcite veins, slightly foliated.
Interbedded GRAYWACKE and SHALE, GRAYWACKE: gray, slightly weathered, moderately hard, intensely fractured, calcite veins, slightly metamorphosed. SHALE: black, moderately weathered, soft to moderately hard, intensely fractured, calcite.
Interbedded GRAYWACKE and SHALE, GRAYWACKE: gray, slightly weathered, moderately hard, intensely fractured, calcite veins, slightly metamorphosed. SHALE: black, moderately weathered, soft to moderately hard, intensely fractured, calcite.
GRAYWACKE, gray, slightly weathered, soft to hard, intensely fractured, sheared fractured zones healed with calcite; mechanical breaks random, calcite veins, slightly metamorphosed.
GRAYWACKE, gray, interbedded with lenses of black SHALE, slightly weathered, soft to moderately soft, intensely fractured, fractures sheared zone healed with calcite, calcite veins, slightly metamorphosed.

5-4-95

Elevation	Sample
	2/10/1 4; 135 11.4
60	REC-100% RQD-59%
	REC-100% RQD-71%
50	REC-100% RQD-85%
	REC-100% RQD-83%
40	REC-100% RQD-79%
	REC-100% RQD-95%
30	REC-100% RQD-92% (DT)
20	REC-100% RQD-90%
	REC-100% RQD-100% (DT)
10	REC-100% RQD-100%
	REC-100% RQD-100% (DT)
0	REC-100% RQD-100%
	REC-100% RQD-100% (DT)
	REC-100% RQD-98%
-10	REC-100% RQD-87%
	REC-100% RQD-100%
-20	REC-100% RQD-100%
	REC-100% RQD-94% (DT)
-30	REC-100% RQD-89% (DT)
	REC-100% RQD-82%
-40	REC-100% RQD-100%
	REC-100% RQD-98%
-50	REC-100% RQD-81%
	REC-100% RQD-90%
-60	REC-100% RQD-100%
	REC-100% RQD-88%
-70	REC-100% RQD-100%
	REC-100% RQD-98%
-80	REC-100% RQD-100%
	REC-100% RQD-100%
-90	REC-100% RQD-87%
	REC-100% RQD-100%
-100	REC-100% RQD-100%
	REC-100% RQD-99%
-110	REC-100% RQD-65%
	REC-100% RQD-98%
-120	REC-100% RQD-100%
-130	REC-100% RQD-90%

182+50

PROFILE
1" = 10'

DIST.	COUNTY	ROUTE	POST MILES TOTAL PROJECT	SHEET NO.	TOTAL SHEETS
04	Ala	80			

REGISTERED ENGINEERING GEOLOGIST

REGISTERED GEOLOGIST R.W. FOX No. 78 Exp. 8-31-97 CERTIFIED ENGINEERING GEOLOGIST STATE OF CALIFORNIA

PLANS APPROVAL DATE

The State of California or its officers or agents shall not be responsible for the accuracy or completeness of electronic copies of this plan sheet.

CONTRACT NO. 04-012024

CONTRACT CHANGE ORDER NO 90

SHEET 222 OF 227

DIVISION OF ENGINEERING SERVICES - OFFICE OF GEOTECHNICAL SERVICES

As-Built Log of Test Borings sheet is considered an informational document only. As such, the State of California registration seal with signature, license number and registration certificate expiration date confirm that this is a true and accurate copy of the original document. It does not attest to the accuracy or validity of the information contained in the original document. This drawing is available and presented only for the convenience of any bidder, contractor or other interested party.

DIST.	COUNTY	ROUTE	KILOMETER POST - TOTAL PROJECT	Sheet No.	Total Sheets
04	SF, Ala	80	12.6 / 13.2		

REGISTERED ENGINEER - CIVIL

YBI EAST TIE-IN

LOG OF TEST BORINGS NO. 12

NOTE: A COPY OF THIS LOG OF TEST BORINGS IS AVAILABLE AT OFFICE OF STRUCTURE MAINTENANCE AND INVESTIGATIONS, SACRAMENTO, CALIFORNIA | CU: 04 EA: 0120R1 | Bridge No. 34-0006 (TEMP)

Revisions made to this Log of Test Borings from the original 1997 Log of Test Borings are the addition of the following notes:

Notes:
1. Refer to Log of Test Borings No. 9 for borehole locations and elevation datum.
2. Stations, dimensions and elevations shown on this plan are in English units.

REGISTERED PROFESSIONAL ENGINEER MIKE KAPUSKAR NO. GE 2364 EXP. 12-31-08 GEOTECHNICAL STATE OF CALIFORNIA

ENGINEERING SERVICE CENTER | STRUCTURE FOUNDATIONS

DRAWN BY Jim Wall 9-95
CHECKED BY 1/2/95

FIELD INVESTIGATION BY: M. LUQMAN & T. CROSBY

State of CALIFORNIA DEPARTMENT OF TRANSPORTATION

DIVISION OF STRUCTURES
STRUCTURE DESIGN

BRIDGE NO. 33-0025
POST MILE 1.15

SAN FRANCISCO-OAKLAND BAY BRIDGE
EARTHQUAKE RETROFIT PROJECT NO. 2
LOG OF TEST BORINGS 6 OF 17

CU: 04
EA: 043441

ORIGINAL SCALE IN INCHES FOR REDUCED PLANS 0 1 2 3

DISREGARD PRINTS BEARING EARLIER REVISION DATES

REVISION DATES (PRELIMINARY STAGE ONLY)

SHEET 38 OF 49

DIST.	COUNTY	ROUTE	POST MILES TOTAL PROJECT	SHEET NO.	TOTAL SHEETS
04	Ala	80			

REGISTERED ENGINEERING GEOLOGIST

REGISTERED GEOLOGIST R.W. FOX No. 78 Exp. 8-31-97 CERTIFIED ENGINEERING GEOLOGIST STATE OF CALIFORNIA

PLANS APPROVAL DATE

The State of California or its officers or agents shall not be responsible for the accuracy or completeness of electronic copies of this plan sheet.

CONTRACT NO. 04-0120R4

CONTRACT CHANGE ORDER NO 90

SHEET 223 OF 227

LOG OF BORING YB4b

Elev.	
+9.4	Top of Filled Ground
	Loose sand and loam. Artificial fill to an approximate Elev. of +5.0
+5.0	Approximate Elev. of original beach.
	Clean moist sand, fully saturated at high tide.
+2.1	Sample YB4b-1, 123#per cu. ft. Clean brown sand, saturated and of medium coarseness:-
-0.3	Gradual change to a stiff yellow, sandy clay, increasing in density with depth.
-3.4	Sample YB4b-2, 132#per cu. ft. Stiff yellow, sandy clay.
-5.6	Stiff sandy clay.
-8.5	Very stiff sandy clay
	Sample YB4b-3, 135#per cu.ft. Soft sandy shale.
-10.0	Very stiff sandy clay.
-11.1	Sample YB4b-4, 133#per cu. ft.
-12.5	Soft sandy rock, part a sandy shale and part a soft sandstone containing hard nodules, gradually changing below Elev. -12.5 to a fairly hard sandstone, seamed and broken Indications of softer interbedded material. Diamond Drilled from Elev. -12.5 to Elev. -19.0
-18.0	A soft stratum encountered between Elev. -18.1 and Elev. -18.6
-18.6	
-19.0	Bottom of Boring

Location: Sta. 179+16. 35' S of ℄

SAN FRANCISCO-OAKLAND BAY BRIDGE (PIER YB4)
— RESIDENT ENGINEER'S REPORT —

HOLE NO YB4b

Depth to Rock Surface: -12.5 · Date of Drilling: July 26, to 28. 1933

Nature and thickness of deposits to rock surface:- +9.4 to +5.0 loose sand, +5.0 to -0.3 sand, -0.3 to -17.0 yellow clay, stiff sandy clay, sandy shale.

DRILL CORE RECORD

Length of Drilling	Core Recovered	Per Cent Recovery	Condition of Core	Character of Rock	Structural features	Remarks

DIVISION OF ENGINEERING SERVICES - OFFICE OF GEOTECHNICAL SERVICES

As-Built Log of Test Borings sheet is considered an informational document only. As such, the State of California registration seal with signature, license number and registration certificate expiration date confirm that this is a true and accurate copy of the original document. It does not attest to the accuracy or validity of the information contained in the original document. This drawing is available and presented only for the convenience of any bidder, contractor or other interested party.

DIST.	COUNTY	ROUTE	KILOMETER POST - TOTAL PROJECT	Sheet No.	Total Sheets
04	SF, Ala	80	12.6 / 13.2		

REGISTERED ENGINEER - CIVIL

YBI EAST TIE-IN

LOG OF TEST BORINGS NO. 13

NOTE: A COPY OF THIS LOG OF TEST BORINGS IS AVAILABLE AT OFFICE OF STRUCTURE MAINTENANCE AND INVESTIGATIONS, SACRAMENTO, CALIFORNIA — CU: 04 EA: 0120R1 — Bridge No. 34-0006 (TEMP)

Revisions made to this Log of Test Borings from the original 1933 Log of Test Borings are the addition of the following notes:

Notes:
1. Elevations shown on this plan are in feet and referred to Mean Lower Low Water (MLLW) Datum. MLLW Datum is 3.09 feet (0.942 m ±) lower than Mean Sea Level (MSL) Datum of 1929.
2. Refer to Log of Test Borings No. 2 for borehole location.
3. Stations, dimensions and elevations shown on this plan are in English units.

REGISTERED PROFESSIONAL ENGINEER MIKE KAPUSKAR NO. GE 2364 EXP. 12-31-08 GEOTECHNICAL STATE OF CALIFORNIA

LEGEND OF EARTH MATERIALS: GRAVEL, SAND, SILT, CLAY, SANDY CLAY or CLAYEY SAND, SANDY SILT or SILTY SAND, SILTY CLAY, CLAYEY SILT, PEAT and/or ORGANIC MATTER, FILL MATERIAL, IGNEOUS ROCK, SEDIMENTARY ROCK, METAMORPHIC ROCK

CONSISTENCY CLASSIFICATION FOR SOILS — According to the Standard Penetration Test

Penetration Index (Blows / Ft)	Granular	Cohesive
0-4	Very Loose	Very Soft
5-9	Loose	Soft
10-19	Slightly compact	Stiff
20-34	Compact	Very Stiff
35-69	Dense	Hard
>70	Very Dense	Very Hard

NOTE: Classification of earth material as shown on this sheet is based upon field inspection and is not to be construed to imply mechanical analysis.

ENGINEERING SERVICE CENTER	STRUCTURE FOUNDATIONS	FIELD INVESTIGATION BY: M. LUQMAN & T. CROSBY	State of CALIFORNIA DEPARTMENT OF TRANSPORTATION	DIVISION OF STRUCTURES STRUCTURE DESIGN	BRIDGE NO. 33-0025 POST MILE 1.15
DRAWN BY	9-95			CU: 04 EA: 043441	
CHECKED BY	11/5/95				

ORIGINAL SCALE IN INCHES FOR REDUCED PLANS → 0 1 2 3

DISREGARD PRINTS BEARING EARLIER REVISION DATES →

REVISION DATES (PRELIMINARY STAGE ONLY) 1/1/96

SAN FRANCISCO-OAKLAND BAY BRIDGE
EARTHQUAKE RETROFIT PROJECT NO. 2
LOG OF TEST BORINGS 16 OF 17

SHEET 48 OF 49

DIST.	COUNTY	ROUTE	POST MILES TOTAL PROJECT	SHEET NO.	TOTAL SHEETS
04	Ala	80			

REGISTERED ENGINEERING GEOLOGIST

REGISTERED GEOLOGIST — R.W. FOX — No. 78 — Exp. 8-31-97 — CERTIFIED ENGINEERING GEOLOGIST — STATE OF CALIFORNIA

PLANS APPROVAL DATE

The State of California or its officers or agents shall not be responsible for the accuracy or completeness of electronic copies of this plan sheet.

CONTRACT NO. 04-012024

CONTRACT CHANGE ORDER NO 10

SHEET 224 OF 237

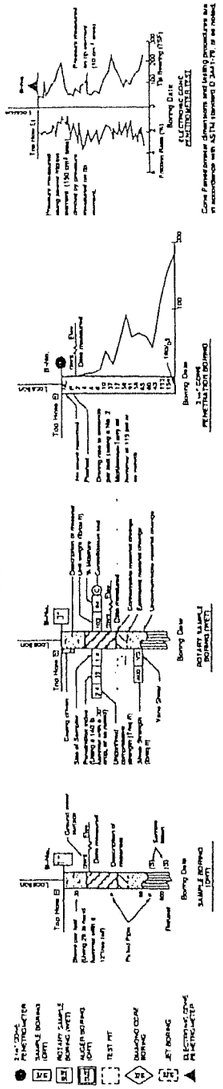

LOG OF BORING NO. YB4a.

Elev +35.6 Top of excavated ground

Very firm sandy soil composed of medium grained, somewhat cemented brown sand. The grains are soft and may be broken into very fine particles by rubbing between the fingers. Very permeable and much softer when wet.

In natural position the soil may be excavated to a vertical face for a considerable height without sliding or crumbling.

+29.6 Gradual increase in degree of cementation.

+27.6 Sample YB4a-1, 121 lbs. per cu ft. Samples were somewhat shattered, breaking under the jar of driving the sampler along planes similar to cleavage planes in rock.

Gradual change to a soft, friable decomposed sandstone or sandy shale.

+25.7 Sample YB4a-2, 128 lbs. per cu ft. Soft friable decomposed sandstone.

+24.8 Samples badly broken.

+24.4 Sample YB4a-3. Same as above but with occasional hard fragments, fairly hard but friable sandstone at Elev +23.1

+23.0 Bedrock

Gradual change to a hard but seamed and broken sandstone with probably some interbedded softer strata.

Diamond Drilled +23.1 to +17.1

+17.0

Location:- Sta. 179+16, 40' N. of ℄.

SAN FRANCISCO-OAKLAND BAY BRIDGE (PIER YB4)

– RESIDENT ENGINEER'S REPORT –

HOLE NO. YB4a.

Depth to Rock Surface: +23.0 — Date of Drilling: July 17, to July 25, 19

Nature and Thickness of Deposits to Rock Surface:- +35.6 to +27.6 Firm Sandy soil. +27.6 to +23 shale + decom. sandsto

DRILL CORE RECORD

Length of Drilling	Core Recovered	Per Cent Recovery	Condition of Core	Character of Rock	Structural Features	Remarks

Plot No. YB4a-Boring No. YB4a.

DIVISION OF ENGINEERING SERVICES - OFFICE OF GEOTECHNICAL SERVICES					
As-Built Log of Test Borings sheet is considered an informational document only. As such, the State of California registration seal with signature, license number and registration certificate expiration date confirm that this is a true and accurate copy of the original document. It does not attest to the accuracy or validity of the information contained in the original document. This drawing is available and presented only for the convenience of any bidder, contractor or other interested party.					
DIST.	COUNTY	ROUTE	KILOMETER POST - TOTAL PROJECT	Sheet No.	Total Sheets
04	SF, Ala	80	12.8 / 13.2		

REGISTERED ENGINEER - CIVIL

YBI EAST TIE-IN

LOG OF TEST BORINGS NO. 14

NOTE: A COPY OF THIS LOG OF TEST BORINGS IS AVAILABLE AT OFFICE OF STRUCTURE MAINTENANCE AND INVESTIGATIONS, SACRAMENTO, CALIFORNIA

CU: 04 EA: 0120R1

Bridge No. 34-0008 (TEMP)

Revisions made to this Log of Test Borings from the original 1933 Log of Test Borings are the addition of the following notes:

Notes:
1. Elevations shown on this plan are in feet and referred to Mean Lower Low Water (MLLW) Datum. MLLW Datum is 3.09 feet (0.942 m ±) lower than Mean Sea Level (MSL) Datum of 1929.
2. Refer to Log of Test Borings No. 2 for borehole location.
3. Stations, dimensions and elevations shown on this plan are in English units.

REGISTERED PROFESSIONAL ENGINEER — MIKE KAPUSKAR — NO. GE 2364 — EXP. 12-31-08 — GEOTECHNICAL — STATE OF CALIFORNIA

ENGINEERING SERVICE CENTER	STRUCTURE FOUNDATIONS	FIELD INVESTIGATION BY:	State of CALIFORNIA DEPARTMENT OF TRANSPORTATION	DIVISION OF STRUCTURES STRUCTURE DESIGN	BRIDGE NO. 33-0025
DRAWN BY: Jan NW 9-95		M. LUQMAN & T. CROSBY			POST MILE 1.15
CHECKED BY: 1/2/15				CU: 04 EA: 043441	DISREGARD PRINTS BEARING EARLIER REVISION DATES →

ORIGINAL SCALE IN INCHES FOR REDUCED PLANS → 0 1 2 3

SAN FRANCISCO-OAKLAND BAY BRIDGE

EARTHQUAKE RETROFIT PROJECT NO. 2

LOG OF TEST BORINGS 17 OF 17

REVISION DATES (PRELIMINARY STAGE ONLY) 1/15/15

SHEET 49 OF 49

DIST.	COUNTY	ROUTE	KILOMETER POST TOTAL PROJECT	SHEET NO.	TOTAL SHEETS
04	SF	80			

Caltrans Metric

REGISTERED ENGINEER - CIVIL

PLANS APPROVAL DATE

The State of California or its officers or agents shall not be responsible for the accuracy or completeness of electronic copies of this plan sheet.

REGISTERED PROFESSIONAL ENGINEER A.L. ELY No. 18880 Exp. 6-30-09 CIVIL STATE OF CALIFORNIA

T.Y. LIN / MOFFATT & NICHOL
TWO HARRISON STREET
SAN FRANCISCO, CA 94105

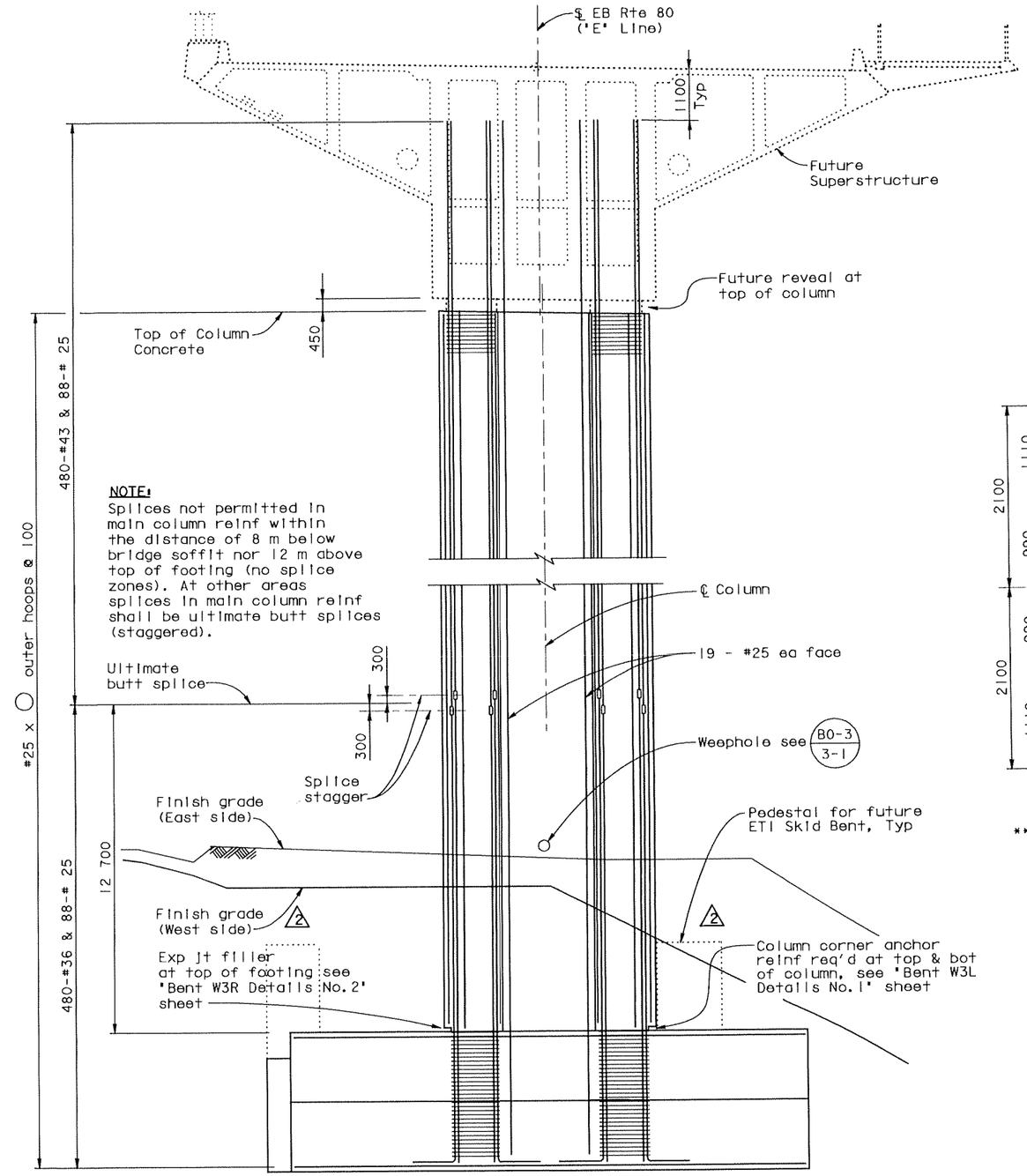

ELEVATION
1:100

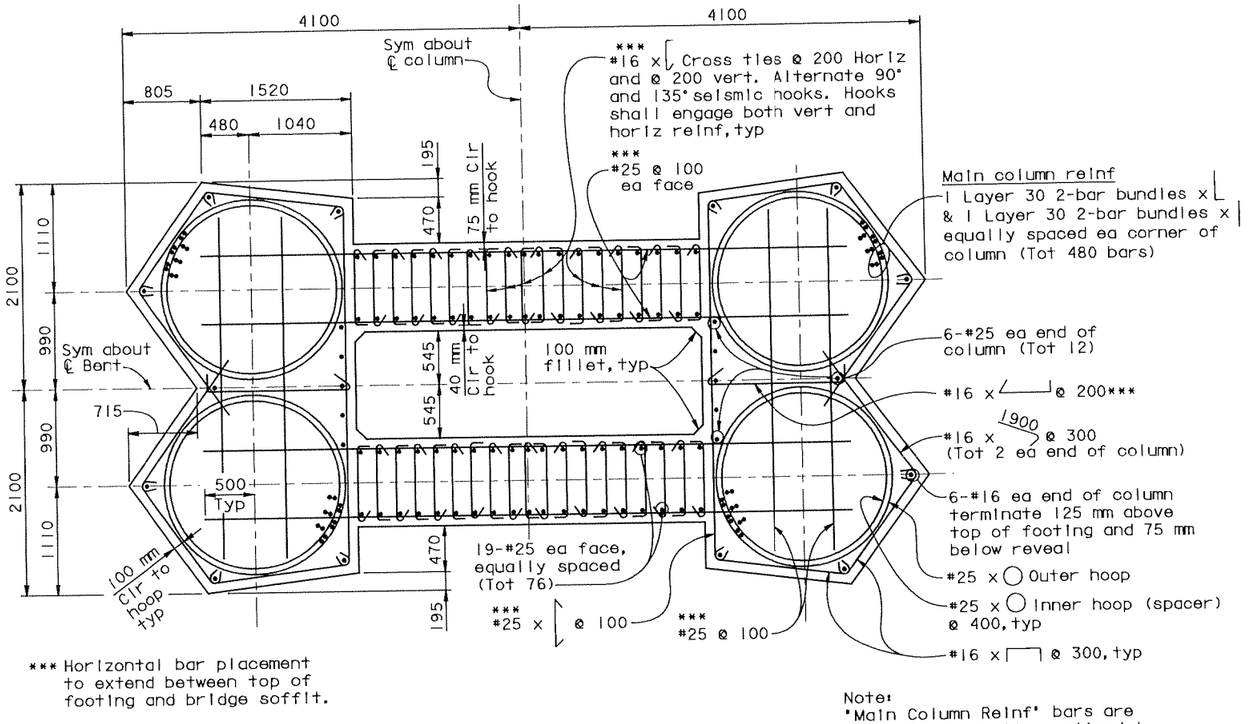

*** Horizontal bar placement to extend between top of footing and bridge soffit.

TYPICAL COLUMN SECTION
1:30

Note:
'Main Column Reinf' bars are #36 bars at footing spliced to #43 bars which extend into bent cap, see elevation.

MARK	DATE	DESCRIPTIONS	BY	CH'D
2	10/31/07	ADDED PEDESTALS FOR ETI SKID BENTS		

REVISIONS

SUPPLEMENTAL SHEET
Contract No: 04-0120R4
CONTRACT CHANGE ORDER NO. 90
SHEET 225 OF 227

ALL DIMENSIONS ARE IN MILLIMETERS UNLESS OTHERWISE SHOWN

SAN FRANCISCO OAKLAND BAY BRIDGE
EAST SPAN SEISMIC SAFETY PROJECT

YBI TRANSITION STRUCTURES

ADVANCE CONST PACKAGE NO. 1R2

BENT W3R DETAILS NO. 1

DESIGN OVERSIGHT
JOHN MOOK, BERNARD CHAN, JUAN F. CARPIO
SIGN OFF DATE

	BY	CHECKED
DESIGN	Darrah/Shangkuan	Ahn
DETAILS	van Ryn/Zucchi/Mai	Jain
QUANTITIES	Liao	E. Nichol

PREPARED FOR THE STATE OF CALIFORNIA DEPARTMENT OF TRANSPORTATION

Jal Birdy
PROJECT ENGINEER

BRIDGE NO. 34-0006 L/R
KILOMETER POST 12.8

CU 04251
EA 0120S1

DISREGARD PRINTS BEARING EARLIER REVISION DATES

REVISION DATES (PRELIMINARY STAGE ONLY) 11/14/06 11/27/06 11/29/06 10/31/07 1/24/08 2/14/03 7/3/06 8/18/06 10/11/06 11/10/06

SHEET 23 OF 65

Rev. Date: 5-18-98

ORIGINAL SCALE IN MILLIMETERS FOR REDUCED PLANS 0 10 20 30 40 50 60 70 80 90 100

FILE => P:\4141-06\CADD\TS\Final Const\Adv Const Pkg 1R2\CCO 2\eebnt50det.dgn

January 24, 2008

USERNAME => fsamson DATE PLOTTED => 3/3/2008 TIME PLOTTED => 8:21:56 AM

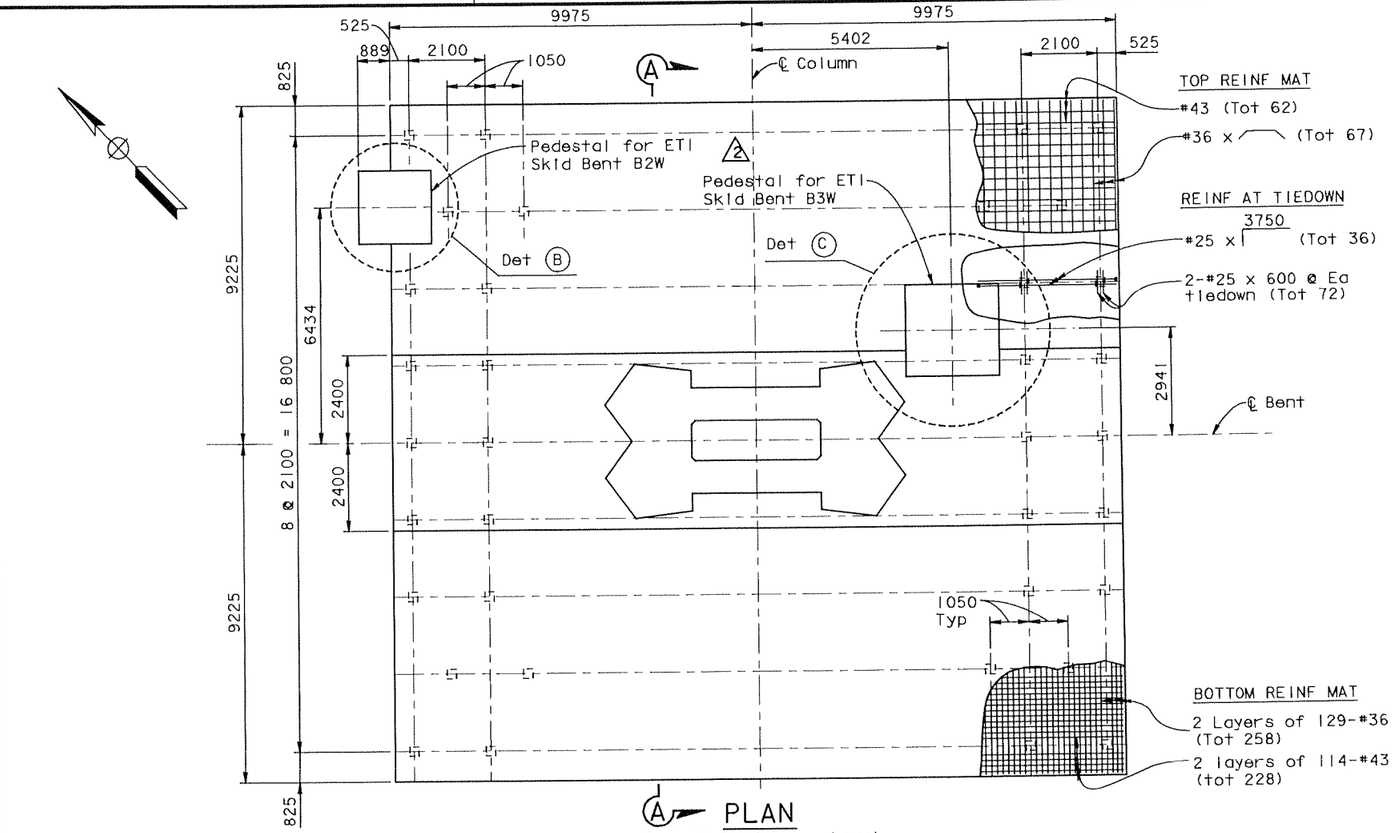

A PLAN
(Tot 36 tiedown anchors)
1:80

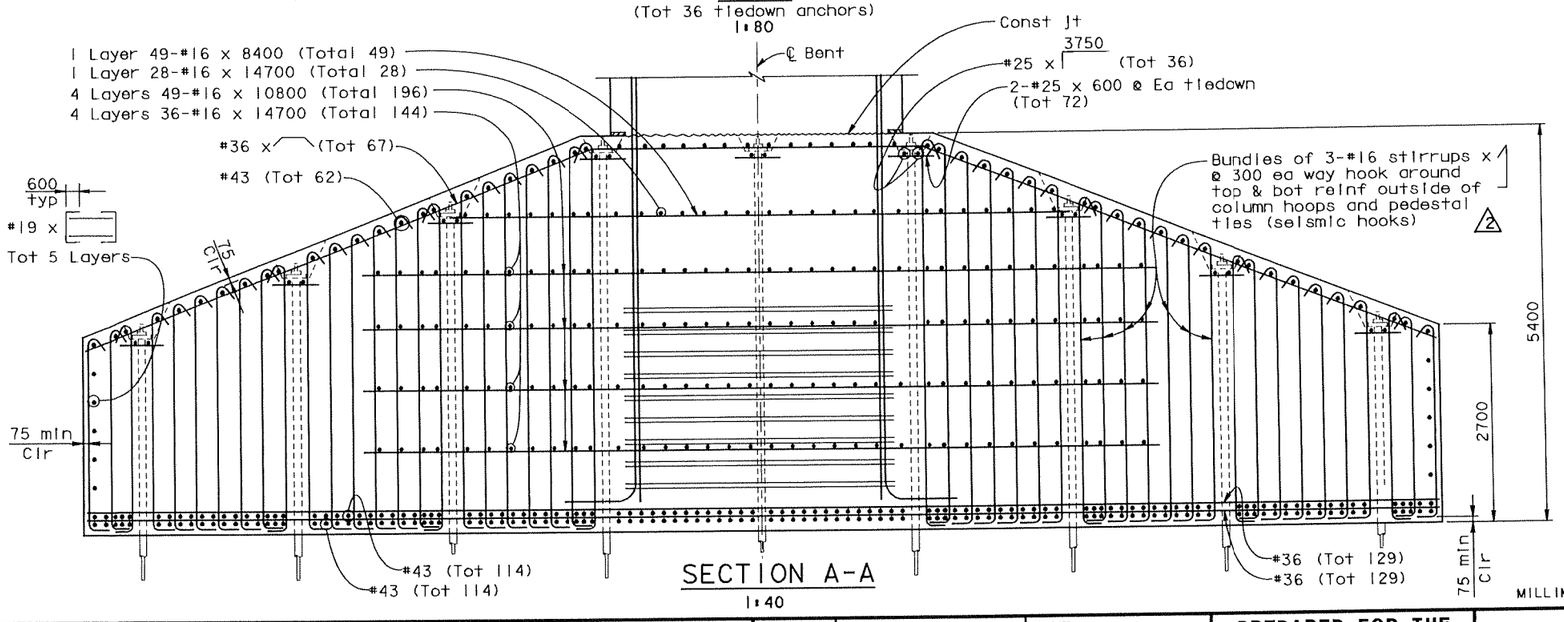

SECTION A-A
1:40

NOTE:
For Details (B) & (C), see 'Bent W3R Details No.3' sheet.

MARK	DATE	DESCRIPTIONS	BY	CH'D
2	10/31/07	ADDED PEDESTALS FOR ETI SKID BENTS		
		REVISIONS		

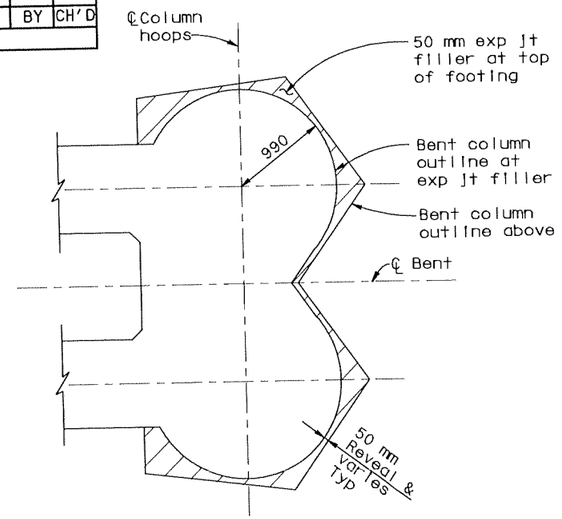

PLAN

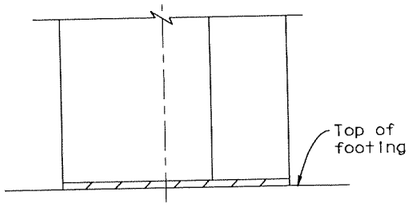

ELEVATION

EXPANSION JOINT FILLER DETAIL AT TOP OF FOOTING

NO SCALE

ALL DIMENSIONS ARE IN MILLIMETERS UNLESS OTHERWISE SHOWN

DIST.	COUNTY	ROUTE	KILOMETER POST TOTAL PROJECT	SHEET NO.	TOTAL SHEETS
04	SF	80			

REGISTERED ENGINEER - CIVIL
PROFESSIONAL ENGINEER — A.L. ELY — No. 18880 — Exp. 6-30-09 — CIVIL — STATE OF CALIFORNIA
PLANS APPROVAL DATE

The State of California or its officers or agents shall not be responsible for the accuracy or completeness of electronic copies of this plan sheet.

T.Y. LIN / MOFFATT & NICHOL
TWO HARRISON STREET
SAN FRANCISCO, CA 94105

SUPPLEMENTAL SHEET
Contract No: 04-0120R4
CONTRACT CHANGE ORDER NO. 90
SHEET 226 OF 227

SAN FRANCISCO OAKLAND BAY BRIDGE
EAST SPAN SEISMIC SAFETY PROJECT

YBI TRANSITION STRUCTURES

ADVANCE CONST PACKAGE NO. 1R2

BENT W3R DETAILS NO. 2

DESIGN OVERSIGHT
JOHN MOOK, BERNARD CHAN, JUAN F. CARPIO
SIGN OFF DATE

	BY	CHECKED
DESIGN	Dodd	Desai
DETAILS	van Ryn/Zuochl/Mal	Jain
QUANTITIES	Liao	E. Nichol

PREPARED FOR THE STATE OF CALIFORNIA
DEPARTMENT OF TRANSPORTATION

Jal Birdy
PROJECT ENGINEER

BRIDGE NO.	34-0006 L/R
KILOMETER POST	12.8

CU 04251
EA 012051

DISREGARD PRINTS BEARING EARLIER REVISION DATES →
REVISION DATES (PRELIMINARY STAGE ONLY): 11/14/06 11/27/06 11/28/06 10/31/07 1/24/08 2/14/08 3/3/08 8/18/08 10/17/08 11/17/08

SHEET 24 OF 65

Rev. Date: 5-18-98

ORIGINAL SCALE IN MILLIMETERS FOR REDUCED PLANS 0 10 20 30 40 50 60 70 80 90 100

FILE => P:\4141-06\CADD\TS\Final Const\Adv Const Pkg 1R2\CCO 2\eebnt5|det.dgn

January 24, 2008

USERNAME => fsamson DATE PLOTTED => 3/3/2008 TIME PLOTTED => 8:22:20 AM

DIST.	COUNTY	ROUTE	KILOMETER POST TOTAL PROJECT	SHEET NO.	TOTAL SHEETS
04	SF	80			

Caltrans Metric

REGISTERED ENGINEER - CIVIL

PLANS APPROVAL DATE

The State of California or its officers or agents shall not be responsible for the accuracy or completeness of electronic copies of this plan sheet.

REGISTERED PROFESSIONAL ENGINEER A.L. ELY No. 18880 Exp. 6-30-09 CIVIL STATE OF CALIFORNIA

T.Y. LIN / MOFFATT & NICHOL
TWO HARRISON STREET
SAN FRANCISCO, CA 94105

NOTE: For location of Details (B) and (C) see 'Bent W3R Details No. 2' sheet.

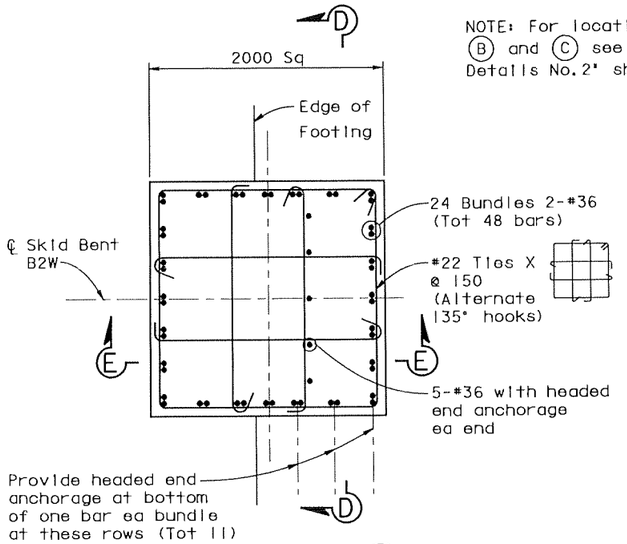

DETAIL (B)
1:25

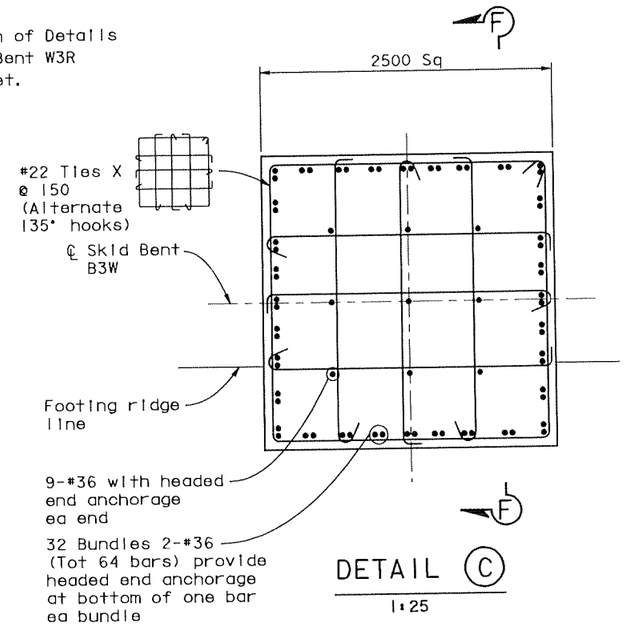

DETAIL (C)
1:25

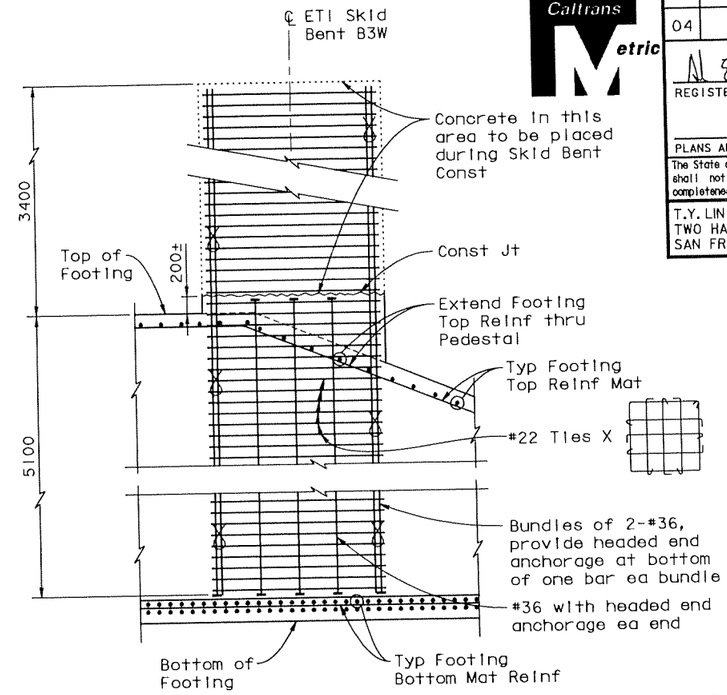

SECTION F-F
1:40

Note: Reinforcement left exposed to accomodate future Skid Bent construction shall be protected from weather and dirt.

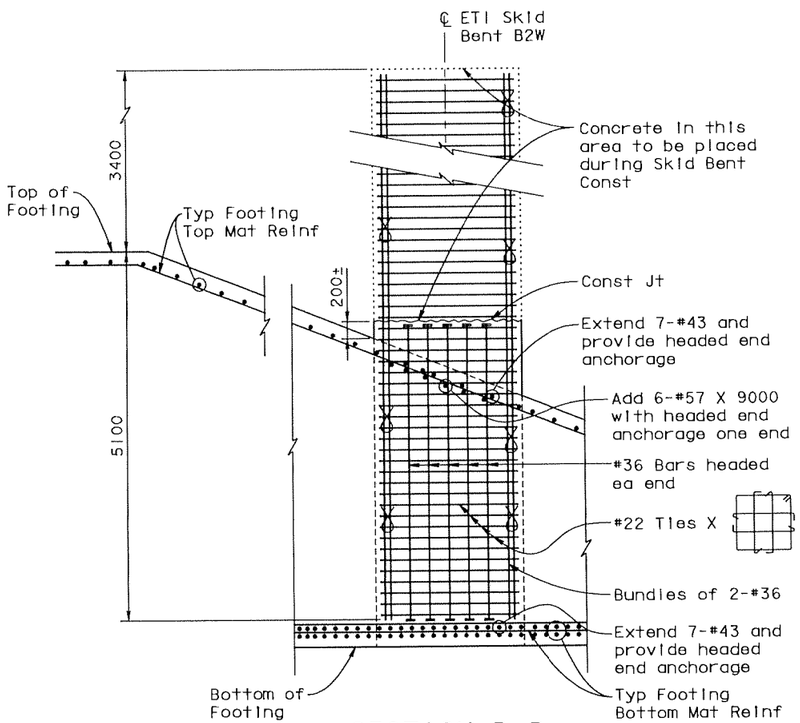

SECTION D-D
1:40

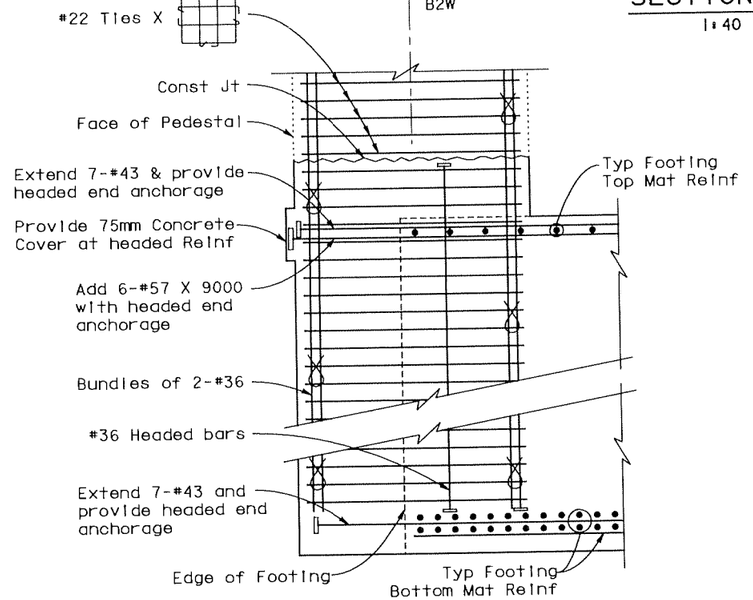

SECTION E-E
1:25

MARK	DATE	DESCRIPTIONS	BY	CH'D
2	10/31/07	NEW SHT FOR ETI PEDESTAL DETAILS		

REVISIONS

SUPPLEMENTAL SHEET
Contract No: 04-0120R4
CONTRACT CHANGE ORDER NO. 90
SHEET 227 OF 227

ALL DIMENSIONS ARE IN MILLIMETERS UNLESS OTHERWISE SHOWN

SAN FRANCISCO OAKLAND BAY BRIDGE
EAST SPAN SEISMIC SAFETY PROJECT

YBI TRANSITION STRUCTURES

ADVANCE CONST PACKAGE NO. 1R2

BENT W3R DETAILS NO. 3

DESIGN OVERSIGHT
JOHN MOOK, BERNARD CHAN, JUAN F. CARPIO
SIGN OFF DATE

	BY	CHECKED
DESIGN	Dodd	Desai
DETAILS	van Ryn/Zucchi/Mai	Jain
QUANTITIES	Liao	E. Nichol

PREPARED FOR THE STATE OF CALIFORNIA DEPARTMENT OF TRANSPORTATION

Jal Birdy
PROJECT ENGINEER

BRIDGE NO. 34-0006 L/R
KILOMETER POST 12.8

CU 04251
EA 0120S1

DISREGARD PRINTS BEARING EARLIER REVISION DATES 10/31/07

REVISION DATES (PRELIMINARY STAGE ONLY)

SHEET 24A OF 65

Rev. Date: 5-18-98

ORIGINAL SCALE IN MILLIMETERS FOR REDUCED PLANS 0 10 20 30 40 50 60 70 80 90 100

FILE => P:\4141-06\CADD\TS\Final Const\Adv Const Pkg 1R2\CCO 2\eebnt52det.dgn

January 24, 2008

USERNAME => fsamson DATE PLOTTED => 3/5/2008 TIME PLOTTED => 9:14:13 AM

RECEIVED

STATE OF CALIFORNIA - DEPARTMENT OF TRANSPORTATION

CONTRACT CHANGE ORDER MEMORANDUM

DATE: 3/14/2008 Page 1 of 2

007495 MAY 1

TO: MIKE FORNER / DENNIS TURCHON	FILE: E.A. 04 - 0120R4
	CO-RTE-PM SF-80-12.6/13.2
FROM: BILL CASEY	FED. NO. ACBRIM-080-1(097)N
CCO#: 90 SUPPLEMENT#: 0 Category Code: CHPR	CONTINGENCY BALANCE (incl. this change) $61,981,558.82
COST: $11,308,380.00 INCREASE ☑ DECREASE ☐	HEADQUARTERS APPROVAL REQUIRED? ☑ YES ☐ NO
SUPPLEMENTAL FUNDS PROVIDED: $0.00	IS THIS REQUEST IN ACCORDANCE WITH ENVIRONMENTAL DOCUMENTS? ☑ YES ☐ NO
CCO DESCRIPTION: Construct Bent 52A & Skid Bent Footings	PROJECT DESCRIPTION: CONSTRUCT ROUTE 80 TEMP BYPASS STRUCTURE

Original Contract Time:	Time Adj. This Change:	Previously Approved CCO Time Adjustments:	Percentage Time Adjusted: (including this change)	Total # of Unreconciled Deferred Time CCO(s): (including this change)
475 Day(s)	DEF Day(s)	1195 Day(s)	252 %	8

THIS CHANGE ORDER PROVIDES FOR:

the construction of the skid bent foundations and Bent 52A of the East Tie-In (ETI) structure.

This project, the Temporary Bypass Structure (TBS), was awarded in March 2004 to construct a detour that will allow for the tie in of the new east span of the San Francisco Oakland Bay Bridge to Yerba Buena Island. The TBS encompasses three main structures, the East Tie-In to the existing bridge, the West Tie-In (WTI) to Yerba Buena Island and the Viaduct structure between the two tie ins.

The original contract was awarded as a performance based contract with the contractor responsible for the design of the structures based upon meeting specified design criteria. The Department issued a December 14, 2006 memo entitled Strategy for South-South Detour Contract Completion which was approved by Tony Anziano (Toll Bridge Program Manager), Richard Land (Chief Engineer) and subsequently by the TBPOC. This memo recommended that the design of the ETI structure be assumed by the Department as opposed to the as-bid performance based contractor design.

The new design of the ETI structure provides for a roll-out / roll-in concept with a new double deck steel truss span being constructed adjacent to the existing span and then rolled into place after the existing span is rolled out. In order to accomplish this roll-out / roll-in concept, an additional bent (Bent 52A) and a new temporary skid bent structure are required to be constructed. This change order provides for the construction of Bent 52A and the construction of the skid bent structure's foundations. The skid bent foundations are being constructed prior to the completion of the substructure and superstructure design in order to advance the work and mitigate potential project and SFOBB corridor wide delays.

The work encompassed under this change includes the excavation of approximately 12,000 cubic meters of soil, the placement of approximately 950 meters of 1,220mm CIDH piles, 25 EA reinforced concrete foundations, 2 EA 45 meter high bridge columns with a bent cap, along with the installation of temporary soil nail and beam and plate shoring.

The agreed lump sum price provided under this change order is based on all excavated soil, excluding drill spoils, being stored either on-site or at the Contractor's stockpile site at the corner of Avenue H and 9th St. on Treasure Island and having that soil incorporated back into the work as backfill. In the event the soil needs to be disposed of off-site due to it being classified as contaminated or hazardous, all transportation and disposal costs for off-site disposal shall be paid as extra work at force account under this change order. In the event any non-contaminated soil cannot be incorporated back into the work and requires off-site disposal, all transportation and disposal costs for off-site disposal shall be paid separately from this change order.

Soil from specified foundations that are anticipated to contain contaminants shall be stockpiled and tested on-site. The cost of this work, including maintenance of the stockpile, is included in the lump sum price provided. Testing of the soil from the remaining foundations will need to be performed in order for it to be accepted at the off-site stockpile. Costs for this testing shall be paid under Change Order No. 123 that provides for the contractor leasing the off-site property.

This change order also provides for the elimination of the planned ETI structure that was covered under a lump sum contract bid item. Compensation will be provided for a portion of the work performed on this item of work prior to its elimination.

...this document is available in alternate formats. For information call: (916) 654-6410 or TDD (916) 654-3880 or write

Elimination of the planned ETI structure shall be made by eliminating the specified contract item at a savings of $6,000,000. Compensation for work performed on this item of work shall be paid as an adjustment of compensation at an agreed lump sum of $66,000. Compensation for constructing the skid bent foundations and Bent 52A shall be paid as extra work at an agreed lump sum price of $16,442,380 with the off-haul and disposal of any contaminated or hazardous soil being paid as extra work at force account at an estimated cost of $800,000. The net change order cost of $11,308,380 shall be financed from the contract's contingency funds. A cost analysis is on file in the project records.

The cost of structural backfill, incorporating soil from the stockpile site back into the work and the removal of temporary shoring is not included in the scope of this change and shall be paid separately from this change order. Structural backfill cannot be performed until the construction of the skid bent substructure has been completed.

Any adjustment of contract time is deferred as the change may affect the controlling operation.

This change was requested by Mike Whiteside, YBI Coordination Engineer, per Memorandum on November 13, 2007 and concurred by Alec Melkonians - Asst. Project Manager, Hong Wong - Project Engineer, Lina Ellis - Structures Maintenance, and Robert Kobal - HQ Assistant Construction Coordinator.

CONCURRED BY:			
Construction Engineer:		Date	
Bridge Engineer:	Mike Whiteside, Toll Bridge Design	Date	11/13/07
Project Engineer:	Hong Wong, PE	Date	3/19/08
Project Manager:	Alec Melkonians	Date	3/19/08
FHWA Rep.:		Date	
Environmental:		Date	
Other (specify):	Robert Kobal, HQ Asst.Const.Coor	Date	3/18/08
Other (specify):	Lina Ellis, Maintenance	Date	3/19/08
District Prior Approval By:		Date	
HQ (Issue Approve) By:	Ken Darby, HQ CCO Engineer	Date	3/26/08
Resident Engineer's Signature:		Date	3-14-08

ESTIMATE OF COST

	THIS REQUEST	TOTAL TO DATE
ITEMS	($6,000,000.00)	($6,000,000.00)
FORCE ACCOUNT	$800,000.00	$800,000.00
AGREED PRICE	$16,442,380.00	$16,442,380.00
ADJUSTMENT	$66,000.00	$66,000.00
TOTAL	$11,308,380.00	$11,308,380.00

FEDERAL PARTICIPATION

☐ PARTICIPATING ☐ PARTICIPATING IN PART ☐ NONE
☐ NON-PARTICIPATING (MAINTENANCE) ☑ NON-PARTICIPATING

FEDERAL SEGREGATION (if more than one Funding Source or P.I.P. type)
☑ CCO FUNDED PER CONTRACT ☐ CCO FUNDED AS FOLLOWS

FEDERAL FUNDING SOURCE	PERCENT

ADA Notice: For individuals with sensory disabilities, this document is available in alternate formats. For information call: (916) 654-6410 or TDD (916) 654-3880 or write

CONTRACT CHANGE ORDER

Change Requested by: Engineer

CCO 91	Suppl. No. 0	Contract No. 04 - 0120R4	Road SF-80-12.6/13.2	FED. AID LOC.: ACBRIM-080-1(097)N

To: CC MYERS INC

You are directed to make the following changes from the plans and specifications or do the following described work not included in the plans and specifications for this contract. ***NOTE: This change order is not effective until approved by the Engineer.***

Description of work to be done, estimate of quantities and prices to be paid. (Segregate between additional work at contract price, agreed price and force account.) Unless otherwise stated, rates for rental of equipment cover only such time as equipment is actually used and no allowance will be made for idle time. This last percentage shown is the net accumulated increase or decrease from the original quantity in the Engineer's Estimate.

In assuming full responsibility for the design of the East Tie In and West Tie In and in ordering design enhancements to the Viaduct of the Temporary Bypass Structure, the Department acknowledges significant Department caused delays to the contract completion. The Department also acknowledges the temporary suspension of the work that was in effect from April 17, 2006 through January 12, 2007 for which no time extension has been granted to date.

This change order provides a partial contract time extension of 144 working days for these Department delays.

This contract time extension, along with the temporary suspensions of work recognized under Change Order No. 14 and Change Order No. 24 and the contract time extension granted under Change Order No. 24, Supplement No. 2, acts to extend the contract date of completion to November 1, 2007.

Upon a Department commitment to a delivery date for the design of the East Tie In structure and the establishment of a fabrication, erection and installation schedule for that structure, the full extent of the Department delays shall be determined and a commensurate time extension shall be granted in order to establish an actual contract completion date.

Adjustment of Compensation at Lump Sum:

In accordance with Section 10-1.20 "Time-Related Overhead" of the contract Special Provisions, the lump sum price for Contract Bid Item No. 8, "Time-Related Overhead" shall be adjusted by $12,631.58 per working day for each of the 144 working days that the contract time is extended under this change order.

144 working days @ $12,631.58 per working day = $1,818,947.52

This lump sum shall be adjusted for time-related overhead payments in excess of 149 percent of the Contractor's lump sum price bid for Contract Bid Item No. 8 "Time Related Overhead". This adjustment shall be performed in accordance with Section 10-1.20 "Time-Related Overhead" of the contract Special Provisions.

This change order does not address any outstanding costs, other than time related overhead, incurred as a result of the Department delays and suspension to the work and this change order doesn't preclude the Contractor from pursuing these costs.

Total Cost of Adjustment of Compensation at Agreed Lump Sum $1,818,947.52

CONTRACT CHANGE ORDER

Change Requested by: Engineer

CCO 91	Suppl. No. 0	Contract No. 04 - 0120R4	Road SF-80-12.6/13.2	FED. AID LOC.: ACBRIM-080-1(097)N

Estimated Cost: Increase ☑ Decrease ☐ $1,818,947.52

By reason of this order the time of completion will be adjusted as follows: 144 days

Submitted by

Signature	Resident Engineer	Date
	BILL CASEY	10-17-07

Approval Recommended by

Signature	SFOBB Construction Manager	Date
Michael Forner	MIKE FORNER	10/22/07

Engineer Approval by

Signature	SFOBB Construction Manager	Date
Michael Forner	MIKE FORNER	10/22/07

We the undersigned contractor, have given careful consideration to the change proposed and agree, if this proposal is approved, that we will provide all equipment, furnish the materials, except as may otherwise be noted above, and perform all services necessary for the work above specified, and will accept as full payment therefor the prices shown above.

NOTE: If you, the contractor, do not sign acceptance of this order, your attention is directed to the requirements of the specifications as to proceeding with the ordered work and filing a written protest within the time therein specified.

Contractor Acceptance by

Signature	(Print name and title)	Date
Daniel E. Humick	DANIEL E. HUMICK, PRESIDENT	10/18/07

RECEIVED

STATE OF CALIFORNIA - DEPARTMENT OF TRANSPORTATION

CONTRACT CHANGE ORDER MEMORANDUM

00678 DEC 14 6

TO: MIKE FORNER / DENNIS TURCHON	FILE: **E.A.** 04 - 0120R4
	CO-RTE-PM SF-80-12.6/13.2
FROM: MAHANTESH ANIGOL	**FED. NO.** ACBRIM-080-1(097)N
CCO#: **91** SUPPLEMENT#: **0** Category Code: **CHPX**	CONTINGENCY BALANCE (incl. this change) **$37,241,649.68**
COST: **$1,818,947.52** INCREASE ☑ DECREASE ☐	HEADQUARTERS APPROVAL REQUIRED? ☑ YES ☐ NO
SUPPLEMENTAL FUNDS PROVIDED: **$0.00**	IS THIS REQUEST IN ACCORDANCE WITH ENVIRONMENTAL DOCUMENTS? ☑ YES ☐ NO
CCO DESCRIPTION: Temp. Suspension Delay Closeout	**PROJECT DESCRIPTION:** CONSTRUCT ROUTE 80 TEMP BYPASS STRUCTURE

Original Contract Time:	Time Adj. This Change:	Previously Approved CCO Time Adjustments:	Percentage Time Adjusted: (including this change)	Total # of Unreconciled Deferred Time CCO(s): (including this change)
475 Day(s)	**144** Day(s)	**381** Day(s)	**111** %	**7**

THIS CHANGE ORDER PROVIDES FOR:

a 144 working day time extension to the contract completion.

This contract calls for the construction of a temporary detour for both eastbound and westbound I-80 traffic that allows for the tie in of the east span of the new San Francisco Oakland Bay Bridge (SFOBB) to Yerba Buena Island. The detour consist of three main structures, the east tie in (ETI) to the bridge, the west tie in (WTI) to the island and the viaduct structure between the two tie ins. The contract was awarded as a performance based project, with the contractor responsible for meeting the design criteria specified in the contract

A December 14, 2006 Department Strategy Memo, approved by Richard Land and Tony Anziano, called for the Department to assume responsibility for the design of the ETI and WTI structures and to order design enhancements to the steel viaduct. The strategy memo recognized that these actions would likely extend the contract completion into 2010 which represents an approximate 3 year extension in contract time.

As of August 2007, the full extent to the project schedule due to the actions mandated by this memo have yet to be fully determined. The current controlling operation pertains to the delivery of the design of the ETI structure. A design delivery of March 2008 has been tentatively established while the work pertaining to the fabrication and erection of the structure and the tie in of the structure to the existing bridge continue to be evaluated. It is anticipated that these issues may be resolved in the coming months.

The contract time for the project expired in June of this year. This change order shall provide a 144 working day extension that will extend the contract completion to November 1, 2007 and allow for the payment of time related overhead through this period.

A previous version of this change order, that provided a partial time extension of 271 working days, was brought to the Toll Bridge Program Oversight Committee (TBPOC) on August 24, 2007 and the TBPOC recommended that the partial time extension act to extend the contract through November 1, 2007 only. The 144 day extension provides for a November 1, 2007 completion date based on the TBPOC's recommendation.

Once the full effect of the ETI design delivery, fabrication, erection and installation on the contract completion is established, a separate change order shall be issued to provide for the full time extension resulting from the Department's actions based on Section 10-1.19 "Progress Schedule (Critical Path Method) of the contract Special Provisions.

Compensation for time related overhead costs shall be paid as an adjustment of compensation at an agreed lump sum $1,818,947.52. This sum is based upon a rate of $12,631.58 per working day as calculated from Contract Bid Item No. 8 "Time-Related Overhead" in accordance with Section 10-1.20 "Time-Related Overhead" of the contract Special Provisions. The change order shall be financed from the contract's contingency funds.

The change order also requires the adjustment of time related overhead payments in excess of 149 percent of the Contractor's lump sum price bid for Contract Bid Item No. 8. This adjustment shall be performed through a supplemental change order based upon documented costs incurred in accordance with Section 10-1.20 of the contract Special Provisions.

ADA Notice: For individuals with sensory disabilities, this document is available in alternate formats. For information call: (916) 654-6410 or TDD (916) 654-3880 or write Records and Forms Management, 1120 N Street, MS-89, Sacramento, CA 95814.

This change order does not address any outstanding costs, other than time related overhead, incurred as a result of the Department delays and suspension to the work and this change order doesn't preclude the Contractor from pursuing these costs.

Maintenance concurrence is not required as this is an administrative change.

CONCURRED BY:			
Construction Engineer:	Mahantesh Anigol	Date	8/27/07
Bridge Engineer:		Date	
Project Engineer:	Hong Wong	Date	8/14/07
Project Manager:	Alec Melkonians	Date	8/16/07
FHWA Rep.:		Date	
Environmental:		Date	
Other (specify):	Robert Kobal, HQ Asst.Const.Coor	Date	8/14/07
Other (specify):	TBPOC	Date	8/24/07
District Prior Approval By:		Date	
HQ (Issue Approve) By:	Ken Darby, HQ CCO Engineer	Date	8/29/07
Resident Engineer's Signature:	M. K. Anigol	Date	8/27/07

ESTIMATE OF COST

	THIS REQUEST	TOTAL TO DATE
ITEMS	$0.00	$0.00
FORCE ACCOUNT	$0.00	$0.00
AGREED PRICE	$0.00	$0.00
ADJUSTMENT	$1,818,947.52	$1,818,947.52
TOTAL	$1,818,947.52	$1,818,947.52

FEDERAL PARTICIPATION

☐ PARTICIPATING ☐ PARTICIPATING IN PART ☐ NONE
☐ NON-PARTICIPATING (MAINTENANCE) ☑ NON-PARTICIPATING

FEDERAL SEGREGATION (if more than one Funding Source or P.I.P. type)
☑ CCO FUNDED PER CONTRACT ☐ CCO FUNDED AS FOLLOWS

FEDERAL FUNDING SOURCE	PERCENT

ADA Notice: For individuals with sensory disabilities, this document is available in alternate formats. For information call: (916) 654-6410 or TDD (916) 654-3880 or write Records and Forms Management, 1120 N Street, MS-89, Sacramento, CA 95814.

CONTRACT CHANGE ORDER

Change Requested by: Engineer

CCO 91	Suppl. No. 1	Contract No. 04 - 0120R4	Road SF-80-12.6/13.2	FED. AID LOC.: ACBRIM-080-1(097)N

To: **CC MYERS INC**

You are directed to make the following changes from the plans and specifications or do the following described work not included in the plans and specifications for this contract. ***NOTE: This change order is not effective until approved by the Engineer.***

Description of work to be done, estimate of quantities and prices to be paid. (Segregate between additional work at contract price, agreed price and force account.) Unless otherwise stated, rates for rental of equipment cover only such time as equipment is actually used and no allowance will be made for idle time. This last percentage shown is the net accumulated increase or decrease from the original quantity in the Engineer's Estimate.

As a result of the Department's assumption of design responsibility for the East and West Tie-Ins and the ordering of design enhancements to the Viaduct of the Temporary Bypass Structure, the Contract time is extended 670 days. The Department also acknowledges the temporary suspension of the work that was in effect from April 17, 2006 through January 12, 2007 which contributed to this delay.

This contract time extension, along with the temporary suspensions of work recognized under Change Order No. 14 and Change Order No. 24 and the contract time extension granted under Change Order No. 24, Supplement No. 2 and the original Change Order No. 91, acts to extend the contract date of completion to September 1, 2009.

Upon a Department commitment to a delivery date for the design of the East Tie In structure and the establishment of a fabrication, erection and installation schedule for that structure, the full extent of the Department delays shall be determined and a commensurate time extension shall be granted in order to establish an actual contract completion date.

Adjustment of Compensation at Lump Sum:

In accordance with Section 10-1.20 "Time-Related Overhead" of the contract Special Provisions, the lump sum price for Contract Bid Item No. 8, "Time-Related Overhead" shall be adjusted by $12,631.58 per working day for each of the 670 working days that the contract time is extended under this change order. The Contractor's Time-Related Overhead rate is currently being audited due to the change in scope of work for the Contract. This item is subject to further adjustment in accordance with the results of the audit.

Cost of Adjustment of Compensation at Agreed Unit Price:

670 working days @ $12,631.58 per working day = $8,463,158.60

This lump sum shall be adjusted for time-related overhead payments in excess of 149 percent of the Contractor's lump sum price bid for Contract Bid Item No. 8 "Time Related Overhead". This adjustment shall be performed in accordance with Section 10-1.20 "Time-Related Overhead" of the contract Special Provisions.

This change order does not address any outstanding costs, other than time related overhead, incurred as a result of the Department delays and suspension to the work and this change order doesn't preclude the Contractor from pursuing these costs.

Total Cost of Adjustment of Compensation at Lump Sum $8,463,158.60

CONTRACT CHANGE ORDER

Change Requested by: Engineer

CCO 91	Suppl. No. 1	Contract No. 04 - 0120R4	Road SF-80-12.6/13.2	FED. AID LOC.: ACBRIM-080-1(097)N

Estimated Cost: Increase ☑ Decrease ☐ $8,463,158.60

By reason of this order the time of completion will be adjusted as follows: 670 days

Submitted by

Signature	Resident Engineer	Date
	BILL CASEY	10-23-07

Approval Recommended by

Signature	SFOBB Construction Manager	Date
Michael E. Forner	MIKE FORNER	10/23/07

Engineer Approval by

Signature	SFOBB Construction Manager	Date
Michael E. Forner	MIKE FORNER	11/16/07

We the undersigned contractor, have given careful consideration to the change proposed and agree, if this proposal is approved, that we will provide all equipment, furnish the materials, except as may otherwise be noted above, and perform all services necessary for the work above specified, and will accept as full payment therefor the prices shown above.

NOTE: If you, the contractor, do not sign acceptance of this order, your attention is directed to the requirements of the specifications as to proceeding with the ordered work and filing a written protest within the time therein specified.

Contractor Acceptance by

Signature	(Print name and title)	Date
D E Himick	PRESIDENT, DANIEL E. HIMICK	11/09/07

STATE OF CALIFORNIA - DEPARTMENT OF TRANSPORTATION

CONTRACT CHANGE ORDER MEMORANDUM

DATE: 10/17/2007

RECE

006779 DEC 14 5

TO: MIKE FORNER / DENNIS TURCHON	FILE: E.A. 04 - 0120R4
	CO-RTE-PM SF-80-12.6/13.2
FROM: BILL CASEY	FED. NO. ACBRIM-080-1(097)N
CCO#: 91 SUPPLEMENT#: 1 Category Code: CHPX	CONTINGENCY BALANCE (incl. this change) $28,378,491.08
COST: $8,463,158.60 INCREASE ☑ DECREASE ☐	HEADQUARTERS APPROVAL REQUIRED? ☑ YES ☐ NO
SUPPLEMENTAL FUNDS PROVIDED: $0.00	IS THIS REQUEST IN ACCORDANCE WITH ENVIRONMENTAL DOCUMENTS? ☑ YES ☐ NO
CCO DESCRIPTION: Late 2009 Time Extension	**PROJECT DESCRIPTION:** CONSTRUCT ROUTE 80 TEMP BYPASS STRUCTURE

Original Contract Time:	Time Adj. This Change:	Previously Approved CCO Time Adjustments:	Percentage Time Adjusted: (including this change)	Total # of Unreconciled Deferred Time CCO(s): (including this change)
475 Day(s)	670 Day(s)	381 Day(s)	221 %	7

THIS CHANGE ORDER PROVIDES FOR:

a 670 working day time extension to the contract completion.

This contract calls for the construction of a temporary detour for both eastbound and westbound I-80 traffic that allows for the tie in of the east span of the new San Francisco Oakland Bay Bridge (SFOBB) to Yerba Buena Island. The detour consist of three main structures, the east tie in (ETI) to the bridge, the west tie in (WTI) to the island and the viaduct structure between the two tie ins. The contract was awarded as a performance based project, with the contractor responsible for meeting the design criteria specified in the contract

A December 14, 2006 Department Strategy Memo, approved by Richard Land and Tony Anziano, called for the Department to assume responsibility for the design of the ETI and WTI structures and to order design enhancements to the steel viaduct. The strategy memo recognized that these actions would likely extend the contract completion into 2010 which represents an approximate 3 year extension in contract time.

On February 15, 2007, the Toll Bridge Program Oversight Committee (TBPOC) approved implementation of the strategy outlined in the December 14, 2006 strategy memo.

The original Change Order No. 91 provided a 144 day time extension that extended the contract completion to November 1, 2007 to allow for the payment of time related overhead through this period.

As of October 2007, the full extent to the project schedule due to the actions mandated by this memo have yet to be fully determined. The current controlling operation pertains to the delivery of the design of the ETI structure. A design delivery of March 2008 has been tentatively established while the work pertaining to the fabrication and erection of the structure and the tie in of the structure to the existing bridge continue to be evaluated. It is anticipated that these issues may be resolved in the coming months.

The purpose of this change order is to provide the minimum time extension that the Department shall be responsible for in order to provide a completion date that more accurately reflects the project schedule realities.

This change order provides for an additional 670 working day time extension that will extend the contract completion date through September 1, 2009 and allow for time related overhead payments through this date. The September 1, 2009 completion represents a best case scenario for the Department based upon an early ETI design delivery and the development of shop drawings and the procurement of raw materials for the fabrication being performed concurrently with the completion of the design.

Once the full effect of the ETI design delivery, fabrication, erection and installation on the contract completion is established, a separate change order shall be issued to provide for the full time extension resulting from the Department's actions based on Section 10-1.19 "Progress Schedule (Critical Path Method) of the contract Special Provisions.

ADA Notice: For individuals with sensory disabilities, this document is available in alternate formats. For information call: (916) 654-6410 or TDD (916) 654-3880 or write Records and Forms Management, 1120 N Street, MS-89, Sacramento, CA 95814.

Compensation for time related overhead costs shall be paid as an adjustment of compensation at an agreed lump sum of $8,463,158.60. This sum is based upon a rate of $12,631.58 per working day as calculated from Contract Bid Item No. 8 "Time-Related Overhead" in accordance with Section 10-1.20 "Time-Related Overhead" of the contract Special Provisions. The change order shall be financed from the contract's contingency funds.

The change order also requires the adjustment of time related overhead payments in excess of 149 percent of the Contractor's lump sum price bid for Contract Bid Item No. 8. This adjustment shall be performed through a supplemental change order based upon documented costs incurred in accordance with Section 10-1.20 of the contract Special Provisions.

This change order does not address any outstanding costs, other than time related overhead, incurred as a result of the Department delays and suspension to the work and this change order doesn't preclude the Contractor from pursuing these costs.

Maintenance concurrence is not required as this is an administrative change.

CONCURRED BY:		
Construction Engineer:	Mahantesh Anigol	Date 10/23/07
Bridge Engineer:		Date
Project Engineer:		Date
Project Manager:	Alec Melkonians	Date 10/22/07
FHWA Rep.:		Date
Environmental:		Date
Other (specify):		Date
Other (specify):	Robert Kobal, HQ Asst.Const.Coor	Date 10/23/07
District Prior Approval By:		Date
HQ (Issue Approve) By:	Ken Darby, HQ CCO Engineer	Date
Resident Engineer's Signature:		Date 10-23-07

ESTIMATE OF COST

	THIS REQUEST	TOTAL TO DATE
ITEMS	$0.00	$0.00
FORCE ACCOUNT	$0.00	$0.00
AGREED PRICE	$0.00	$0.00
ADJUSTMENT	$8,463,158.60	$10,282,106.12
TOTAL	$8,463,158.60	$10,282,106.12

FEDERAL PARTICIPATION

☐ PARTICIPATING ☐ PARTICIPATING IN PART ☐ NONE
☐ NON-PARTICIPATING (MAINTENANCE) ☑ NON-PARTICIPATING

FEDERAL SEGREGATION (if more than one Funding Source or P.I.P. type)
☑ CCO FUNDED PER CONTRACT ☐ CCO FUNDED AS FOLLOWS

FEDERAL FUNDING SOURCE	PERCENT

ADA Notice: For individuals with sensory disabilities, this document is available in alternate formats. For information call: (916) 654-6410 or TDD (916) 654-3880 or write Records and Forms Management, 1120 N Street, MS-89, Sacramento, CA 95814.

CONTRACT CHANGE ORDER

Change Requested by: Engineer

CCO 91	Suppl. No. 2	Contract No. 04 - 0120R4	Road SF-80-12.6/13.2	FED. AID LOC.:

To: CC MYERS INC

You are directed to make the following changes from the plans and specifications or do the following described work not included in the plans and specifications for this contract. ***NOTE: This change order is not effective until approved by the Engineer.***

Description of work to be done, estimate of quantities and prices to be paid. (Segregate between additional work at contract price, agreed price and force account.) Unless otherwise stated, rates for rental of equipment cover only such time as equipment is actually used and no allowance will be made for idle time. This last percentage shown is the net accumulated increase or decrease from the original quantity in the Engineer's Estimate.

A determination of the delay in completion of the contract due to all outstanding Department caused delays incurred to the contract has been made in accordance with Section 10-1.19,"Progress Schedule (Critical Path Method)," of the Special Provisions and Section 8-1.07,"Liquidated Damages," of the Standard Specifications.

The Contractor shall be granted a 465 working day time extension for these delays.

This contract time extension is based on the both the upper and lower decks of the Temporary Bypass Structure being open to traffic by September 8, 2009. In the event this traffic opening is delayed beyond September 8, 2009, a commensurate time extension shall be granted in addition to the time extension granted under this change order.

This contract time extension, along with the temporary suspensions of work recognized under Contract Change Order (CCO) No. 14 and CCO No. 24 and the contract time extensions granted under CCO No. 24 - Supplement No. 2, CCO No. 91 and No. 91 - Supplement No. 1 acts to extend the contract date of completion to December 10, 2010.

The Contractor shall pay to the Department liquidated damages of $16,000.00 per day for each calendar day's delay in finishing the work after the expiration of the contract working days.

As agreed under this change order, the Contractor shall complete all Contract work within the area defined as Area PRA, as shown on Page No. 3 of this change order, and vacate this area by July 31, 2010. The Contractor shall pay to the Department liquidated damages of $16,000.00 per day for each calendar day's delay in vacating Area PRA after this date.

Of the 465 workings days of time extension granted under this change order, 435 of these working days shall be considered compensable. The remaining 30 working days of time extension granted under this change order shall be granted as a non-compensable time extension. These 30 working days shall be defined as the last 30 days of the contract duration from November 11 to December 10, 2010.

Adjustment of Compensation at Unit Price:

In accordance with Section 10-1.20 "Time-Related Overhead" of the contract Special Provisions, the lump sum price for Contract Bid Item No. 8, "Time-Related Overhead" shall be adjusted by $12,631.58 per working day for each of the 435 compensable working days that are provided under this change order.

435 working days @ $12,631.58 per working day = $5,494,737.30 (+ 443%)

This lump sum shall be adjusted for time-related overhead payments in excess of 149 percent of the Contractor's lump sum price bid for Contract Bid Item No. 8 "Time Related Overhead". This adjustment shall be performed in accordance with Section 10-1.20 "Time-Related Overhead" of the contract Special Provisions.

Total Cost of Adjustment of Compensation at Agreed Unit Price $5,494,737.30

CONTRACT CHANGE ORDER

Change Requested by: Engineer

CCO 91	Suppl. No. 2	Contract No. 04 - 0120R4	Road SF-80-12.6/13.2	FED. AID LOC.:

This change order acts to resolve all outstanding deferred time change orders listed below that have been approved by the Engineer prior to the Contractor's acceptance of this change order. No additional time extensions shall be granted for these change orders.

Contract Change Order Numbers: 11, 37, 46, 47, 48, 49-S1, 50, 50-S1, 50-S2, 50-S3, 52, 56, 60, 61-S1, 62, 65-S1, 69-S1, 70, 70-S1, 72, 73, 75, 75-S1, 77, 79-S1, 80, 90, 92, 97, 100, 105, 108, 112, 112-S1, 112-S2, 112-S3, 112-S4, 113, 116, 116-S1, 116-S2, 126, 129, 135, 140, 140-S1, 140-S2, 141, 143, 144, 144-S1, 144-S2, 149, 153, 155, 159, 160, 166, 166-S1, 167, 169, 170, 171, 172, 174, 174-S1, 175, 180, 184, 184-S1, 186, 187, 192, 193, 202, 204, 207, 212

The contract time extension provided under this change order includes the effect of all work contemplated within the Contractor's accepted July 2009 monthly update schedule including but not limited to the following identified items of work for which change orders are pending:

Change Order No. 177 Lowering and Bridge Removal of Span YB4
Change Order No. 195 USCG Stair Access to Quarters 9
Change Order No. 217 Skid Bent Demolition & Backfill of the ETI Area
Change Order No. 220 Flashing Beacons & Additional YBI Tunnel Lighting

No addition time extension shall be granted for the work contemplated under these change orders.

This change order does not address any outstanding costs, other than time related overhead, incurred as a result of the Department delays and suspension to the work and this change order doesn't preclude the Contractor from pursuing these costs.

The Contractor shall not be entitled to compensation for any additional delay costs incurred due to the 30 working days of non-compensable time extension granted under this change order.

Liquidated damages specified under this change order shall conform to Section 8-1.07 "Liquidated Damages" of the Standard Specifications.

Estimated Cost: **Increase** ☑ **Decrease** ☐ **$5,494,737.30**

By reason of this order the time of completion will be adjusted as follows: 465 days

Submitted by:		
Signature	**Resident Engineer** BILL CASEY	**Date** 10-6-09
Approval recommended by:		
Signature	**SFOBB Construction Manager** MIKE FORNER	**Date** 10-12-09
Engineer Approved by:		
Signature	**SFOBB Construction Manager** MIKE FORNER	**Date** 10-15-09

We the undersigned contractor, have given careful consideration to the change proposed and agree, if this proposal is approved, that we will provide all equipment, furnish the materials, except as may otherwise be noted above, and perform all services necessary for the work above specified, and will accept as full payment therefor the prices shown above.

NOTE: If you, the contractor, do not sign acceptance of this order, your attention is directed to the requirements of the specifications as to proceeding with the ordered work and filing a written protest within the time therein specified.

Contractor Acceptance by:		
Signature	**(Print name and title)** DANIEL E. HUMICK, PRESIDENT	**Date** 10/14/09

Dist	COUNTY	ROUTE	KILOMETER POST TOTAL PROJECT	SHEET No.	TOTAL SHEETS
04	SF	80	12.7/13.2	18	806

REGISTERED CIVIL ENGINEER — DATE 3-05-08

T.T. Lai
No. 63630
Exp. 9-30-10
CIVIL
REGISTERED PROFESSIONAL ENGINEER
STATE OF CALIFORNIA

PLANS APPROVAL DATE 6-23-08

THE STATE OF CALIFORNIA OR ITS OFFICERS OR AGENTS SHALL NOT BE RESPONSIBLE FOR THE ACCURACY OR COMPLETENESS OF ELECTRONIC COPIES OF THIS PLAN SHEET.

Caltrans Metric

5

LEGEND: (THIS SHEET ONLY)

- CONTRACT No. 04-0120S4
- CONTRACT No. 04-0120R4
- CONTRACT No. 04-0120F4
- CONTRACT OVERLAP PR
- CONTRACT OVERLAP FP
- CONTRACT OVERLAP PRA

San Francisco Bay

SAN FRANCISCO

N 647186.154
E 1835909.349

N 647403.645
E 1835937.397

N 647404.810
E 1835997.600

N 647468.199
E 1836042.024

55+76.72

N 647,528.067
E 1,836,173.116

N 647,531.127
E 1,836,214.786

N 647329.768
E 1835935.343

N 647298.082
E 1835947.930

N 647267.194
E 1835868.932

N 647253.640
E 1835856.785

N 647299.891
E 1835912.061

N 647224.852
E 1835873.400

N 647233.747
E 1835839.728

N 647225.270
E 1835831.819

N 647214.028
E 1835871.676

N 647188.338
E 1835880.211

Area PR

N 647314.073
E 1835989.091

N 647286.430
E 1835938.232

N 647283.771
E 1835926.231

N 647246.955
E 1835880.203

N 647267.183
E 1836052.538

N 647355.878
E 1836125.680

N 647156.406
E 1835837.797

N 647089.577
E 1835778.637

N 647148.984
E 1835846.072

Area PRA

EDR1 LINE

WDR1 LINE

EDT1 LINE

WDT1 LINE

E LINE

W LINE

Area FP

56+06.38

55+97.551

N 647443.736
E 1836246.954

EXIST ROUTE 80

N 647,451.444
E 1,836,266.756

N 647344.920
E 1836142.057

55+67.921

N 647,442.209
E 1,836,240.923

TEMPORARY CONSTRUCTION MARINE ACCESS TRESTLE AREA

N 647392.557
E 1836296.194

N 647324.953
E 1836125.222

N 647302.328
E 1836151.573

N 647310.015
E 1836108.519

N 647304.500
E 1836114.474

N 647261.234
E 1836082.169

N 647388.578
E 1836287.098

San Francisco Bay

N 647346.444
E 1836330.201

N 647399.581
E 1836407.438

N 647044.431
E 1835829.635

Yerba Buena Island

N 647180.937
E 1836016.001

N 647231.577
E 1836057.791

Hillcrest Rd

N 647137.594
E 1835960.520

E 1835938.464

5 REVISED PER ADDENDUM No. 5 DATED JULY 30, 2009

CONSTRUCTION DETAILS AREAS FOR CONTRACTOR USE

SCALE: 1:1000

C-6

LAST REVISION DATE PLOTTED => 28-JUL-2009
05-20-08 TIME PLOTTED => 06:15

CALCULATED-DESIGNED BY	TRINH LAI	REVISED BY	TL
CHECKED BY	BOB ZANDIPOUR	DATE REVISED	10/07

FUNCTIONAL SUPERVISOR: BOB ZANDIPOUR

STATE OF CALIFORNIA - DEPARTMENT OF TRANSPORTATION
Caltrans DESIGN

BORDER LAST REVISED 3/1/2007

RELATIVE BORDER SCALE 0 20 40 60 80

USERNAME => trmikesl
DGN FILE => 4012Osqq006.qqd

CU 04251

EA 0120S1

STATE OF CALIFORNIA - DEPARTMENT OF TRANSPORTATION

CONTRACT CHANGE ORDER MEMORANDUM

TO: MIKE FORNER / DEANNA VILCHECK	FILE: E.A. 04 - 0120R4
	CO-RTE-PM SF-80-12.6/13.2
FROM: BILL CASEY	FED. NO.
CCO#: 91 SUPPLEMENT#: 2 Category Code: CHXX	CONTINGENCY BALANCE (incl. this change) $47,384,383.59
COST: $5,494,737.30 INCREASE ☑ DECREASE ☐	HEADQUARTERS APPROVAL REQUIRED? ☑ YES ☐ NO
SUPPLEMENTAL FUNDS PROVIDED: $0.00	IS THIS REQUEST IN ACCORDANCE WITH ENVIRONMENTAL DOCUMENTS? ☑ YES ☐ NO
CCO DESCRIPTION: Contract Days Extension / TRO Comp	PROJECT DESCRIPTION: CONSTRUCT ROUTE 80 TEMP BYPASS STRUCTURE

Original Contract Time:	Time Adj. This Change:	Previously Approved CCO Time Adjustments:	Percentage Time Adjusted: (including this change)	Total # of Unreconciled Deferred Time CCO(s): (including this change)
475 Day(s)	465 Day(s)	1195 Day(s)	349 %	68

THIS CHANGE ORDER PROVIDES FOR:

a 465 working day time extension to the contract completion.

This contract calls for the construction of a temporary detour for both eastbound and westbound I-80 traffic that allows for the tie in of the east span of the new San Francisco Oakland Bay Bridge (SFOBB) to Yerba Buena Island. The detour consist of three main structures, the east tie in (ETI) to the bridge, the west tie in (WTI) to the island and the viaduct (VIA) structure between the two tie ins. The contract was awarded as a performance based project, with the contractor responsible for meeting the design criteria specified in the contract

A December 14, 2006 Department Strategy Memo, approved by Richard Land and Tony Anziano, called for the Department to assume responsibility for the design of the ETI and WTI structures and to order design enhancements to the steel viaduct. A subsequent Department Strategy Memo dated December 25, 2006 provided for the advance construction of the foundations for the Yerba Buena Island Transition Structure (YBITS) that consist of the permanent structures that tie the new east span of the SFOBB to Yerba Buena Island. These strategy memos recognized that these actions would likely extend the contract completion into 2010.

Contract Change Orders (CCO) No. 91 and No. 91 - Supplement No. 1 provided a 144 and 670 day time extension that extended the contract completion to September 1, 2009 to allow for the payment of time related overhead through this period. These change orders provided only a partial time extension in order to allow for time related overhead payments to be made in a timely manner. At the time these change orders were issued, the full extent of the Department ordered changes to the controlling operations were not known. As the scope of these changes has now been clearly defined, this change order acts to provide the appropriate time extension.

The project's controlling operation flows from the completion of the ETI structure to the demolition of the existing structure and the subsequent construction of the Bent W5 foundation and column. The Department impacts to these items of work are described below:

East Tie-In Design Change:

The Contractor's as-bid design called for the ETI structure to incorporate the existing steel truss with the new ETI steel structure. The revised Department issued design provides for a roll-out / roll-in concept with a new double deck steel truss span being erected adjacent to the existing span and then rolled into place after the existing span is rolled out. These changes have been implemented by issuing over 50 change orders concerning the construction of the concrete foundations, columns, bent caps and deck, the fabrication and installation of isolation bearings and expansion joints, the retrofit of the existing structure to allow for the roll out of the existing truss and procuring materials, fabricating and erecting the steel truss, and the skid bent system to be employed in the roll out and roll in of the structures.

Removal of Existing Structure:

The contract calls for the removal of the existing structure after traffic has been placed on the new detour structure. This work includes the removal of 3 double deck steel truss spans each approximately 90 meters long, 20 meters wide and 50 meters above the ground along with the removal of a double deck concrete structure approximately 70 meters long and 20 meters wide. This bridge removal work shall be impacted by the presence of 13 foundations and columns constructed as part of the

disabilities, this document is available in alternate formats. For information call: (916) 654-6410 or TDD (916) 654-3880 or write

advance work for the YBITS contract that was added under CCOs No. 64, No. 70, No. 73, No. 75, and No. 77. Many of these columns are located directly under or adjacent to the existing structure being removed.

Construction of Bent W5:

CCO No. 73 provided for the construction of 9 footings and columns as part of the advance work for the YBITS contract. Two of these footings and columns pertaining to Bent W5 will be constructed after a portion of the existing structure is removed. This work will be the last work completed on the contract.

Based on a time impact analysis, these Department changes to the contract result in a contract completion date of December 10, 2010. This date translates to an additional 465 working day time extension. Of these 465 working days, the Contractor has agreed to accept 30 of these days as non-compensable time. These 30 days of non-compensable time will allow for demobilization from the jobsite which shall be considered more extensive due to the increased scope of work.

This CCO also calls for the Contractor to vacate a specified area of the project site by July 31, 2010. This area will be turned over to the Yerba Buena Island Transition Structure project that follows this contract.

Compensation for time related overhead costs shall be paid as an adjustment of compensation at an agreed lump sum of $5,494,737.30. This sum is based upon a rate of $12,631.58 per working day as calculated from Contract Bid Item No. 8 "Time-Related Overhead" in accordance with Section 10-1.20 "Time-Related Overhead" of the contract Special Provisions. The change order shall be financed from the contract's contingency funds.

This change order also requires the adjustment of time related overhead payments in excess of 149 percent of the Contractor's lump sum price bid for Contract Bid Item No. 8. This adjustment shall be performed through a supplemental change order based upon documented costs incurred in accordance with Section 10-1.20 of the contract Special Provisions.

This change order does not address any outstanding costs, other than time related overhead, incurred as a result of the Department delays and suspension to the work and this change order does not preclude the Contractor from pursuing these costs.

This change order acts to resolve all deferred time issued on all change orders approved prior to the Contractor's acceptance of this change order and no additional time extensions shall be granted. Contract Change Order Numbers: 11, 37, 46, 47, 48, 49-S1, 50, 50-S1, 50-S2, 50-S3, 52, 56, 60, 61-S1, 62, 65-S1, 69-S1, 70, 70-S1, 72, 73, 75, 75-S1, 77, 79-S1, 80, 90, 92, 97, 100, 105, 108, 112, 112-S1, 112-S2, 112-S3, 112-S4, 113, 116, 116-S1, 116-S2, 126, 129, 135, 140, 140-S1, 140-S2, 141, 143, 144, 144-S1, 144-S2, 149, 153, 155, 159, 160, 166, 166-S1, 167, 169, 170, 171, 172, 174, 174-S1, 175, 180, 184, 184-S1, 186, 187, 192, 193, 202, 204, 207, 212

This change was concurred by Alec Melkonians - Asst. Project Manager, Hong Wong - Project Engineer, and Patrick Treacy - HQ Asst. Construction Coordinator. TBPOC Approval granted on July 15, 2009.

Maintenance concurrence is not required as this is an administrative change.

CONCURRED BY:		
Construction Engineer:	Bill Casey, Resident Engineer	Date 8-30-09
Bridge Engineer:		Date
Project Engineer:	Hong Wong, PE	Date 8/20/09
Project Manager:	Alec Melkonians	Date 8/20/09
FHWA Rep.:		Date
Environmental:		Date
Other (specify):	Patrick Treacy, HQ Asst.Const.Co	Date 8/25/09
Other (specify):		Date
District Prior Approval By:		Date
HQ (Issue Approve) By:	Bob Molera, HQ CCO Engineer	Date 9/2/09
Resident Engineer's Signature:		Date 8-30-09

ESTIMATE OF COST

	THIS REQUEST	TOTAL TO DATE
ITEMS	$0.00	$0.00
FORCE ACCOUNT	$0.00	$0.00
AGREED PRICE	$0.00	$0.00
ADJUSTMENT	$5,494,737.30	$15,776,843.42
TOTAL	$5,494,737.30	$15,776,843.42

FEDERAL PARTICIPATION

☐ PARTICIPATING ☐ PARTICIPATING IN PART ☑ NONE
☐ NON-PARTICIPATING (MAINTENANCE) ☐ NON-PARTICIPATING

FEDERAL SEGREGATION (if more than one Funding Source or P.I.P. type)
☐ CCO FUNDED PER CONTRACT ☐ CCO FUNDED AS FOLLOWS

FEDERAL FUNDING SOURCE	PERCENT

CONTRACT CHANGE ORDER

Change Requested by: Engineer

CCO 92	Suppl. No. 0	Contract No. 04 - 0120R4	Road SF-80-12.6/13.2	FED. AID LOC.: ACBRIM-080-1(097)N

To: **CC MYERS INC**

You are directed to make the following changes from the plans and specifications or do the following described work not included in the plans and specifications for this contract. ***NOTE: This change order is not effective until approved by the Engineer.***

Description of work to be done, estimate of quantities and prices to be paid. (Segregate between additional work at contract price, agreed price and force account.) Unless otherwise stated, rates for rental of equipment cover only such time as equipment is actually used and no allowance will be made for idle time. This last percentage shown is the net accumulated increase or decrease from the original quantity in the Engineer's Estimate.

Extra Work at Force Account:

As authorized by the Engineer, and in accordance with sheets 2 through 4 or this change order, and Section 19-3.01 'Structure Excavation and Backfill' of the Standard Specifications, provide labor, materials and equipment necessary to trench, maintain the access path to E2/T1 (Contract 04-0120E4) job site, remove and dispose of unneeded facilities.

The work will consist of the following:

1. Excavate 3.658m x 3.658m pit as shown on attached plan to view full depth of duct bank.
2. Submit a shoring plan for the pit excavations.
3. Expose existing AT&T conduit duct bank, as required to allow work to be performed by others (AT&T) to pull the cable from duct structure.
4. Demolish and remove existing duct bank.
5. Backfill the existing and new trenches.
6. Remove and dispose of excess soil material.
7. Verify that existing Verizon/MCI/Western Union duct bank conduits are abandoned.

This work will be paid for in accordance with Section 5-1.24 "Force Account Payment" of the Special Provisions and Section 4-1.03D "Extra Work" of the Standard Specifications.

Estimated cost of Extra Work at Force Account $175,000.00

Estimated Cost: **Increase** ☑ **Decrease** ☐ **$175,000.00**

By reason of this order the time of completion will be adjusted as follows: Deferred

Submitted by

Signature	Resident Engineer BILL CASEY	Date 12-4-07

Approval Recommended by

Signature	Area Construction Manager DENNIS TURCHON	Date 12-4-07

Engineer Approval by

Signature	Area Construction Manager DENNIS TURCHON	Date 12/17/07

We the undersigned contractor, have given careful consideration to the change proposed and agree, if this proposal is approved, that we will provide all equipment, furnish the materials, except as may otherwise be noted above, and perform all services necessary for the work above specified, and will accept as full payment therefor the prices shown above.

NOTE: If you, the contractor, do not sign acceptance of this order, your attention is directed to the requirements of the specifications as to proceeding with the ordered work and filing a written protest within the time therein specified.

Contractor Acceptance by

Signature	(Print name and title) DANIEL E. HUNICK, PRESIDENT	Date 12/12/07

Dist	COUNTY	ROUTE	KILOMETER POST TOTAL PROJECT	SHEET No.	TOTAL SHEETS
04	SF		12.6/13.2	1	1

Caltrans Metric

ALEC MELKONIANS
REGISTERED CIVIL ENGINEER DATE

NOVEMBER 16, 2007
PLANS APPROVAL DATE

REGISTERED PROFESSIONAL ENGINEER — No. — Exp. — CIVIL — STATE OF CALIFORNIA

THE STATE OF CALIFORNIA OR ITS OFFICERS OR AGENTS SHALL NOT BE RESPONSIBLE FOR THE ACCURACY OR COMPLETENESS OF ELECTRONIC COPIES OF THIS PLAN SHEET.

CONTRACT NO. 04-0120R4

CONTRACT CHANGE ORDER NO 92

SHEET 2 OF 4

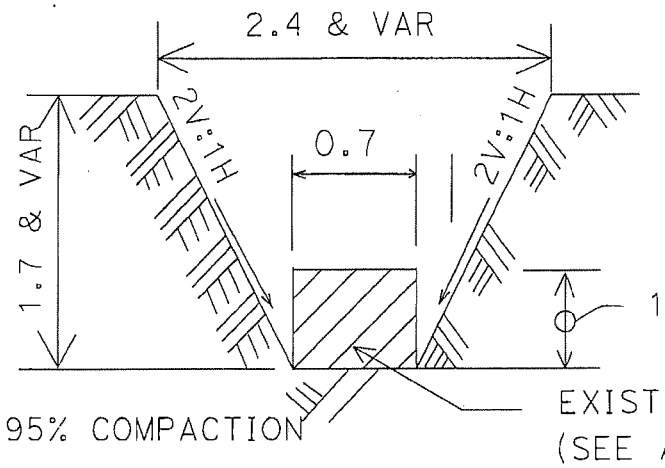

A-A

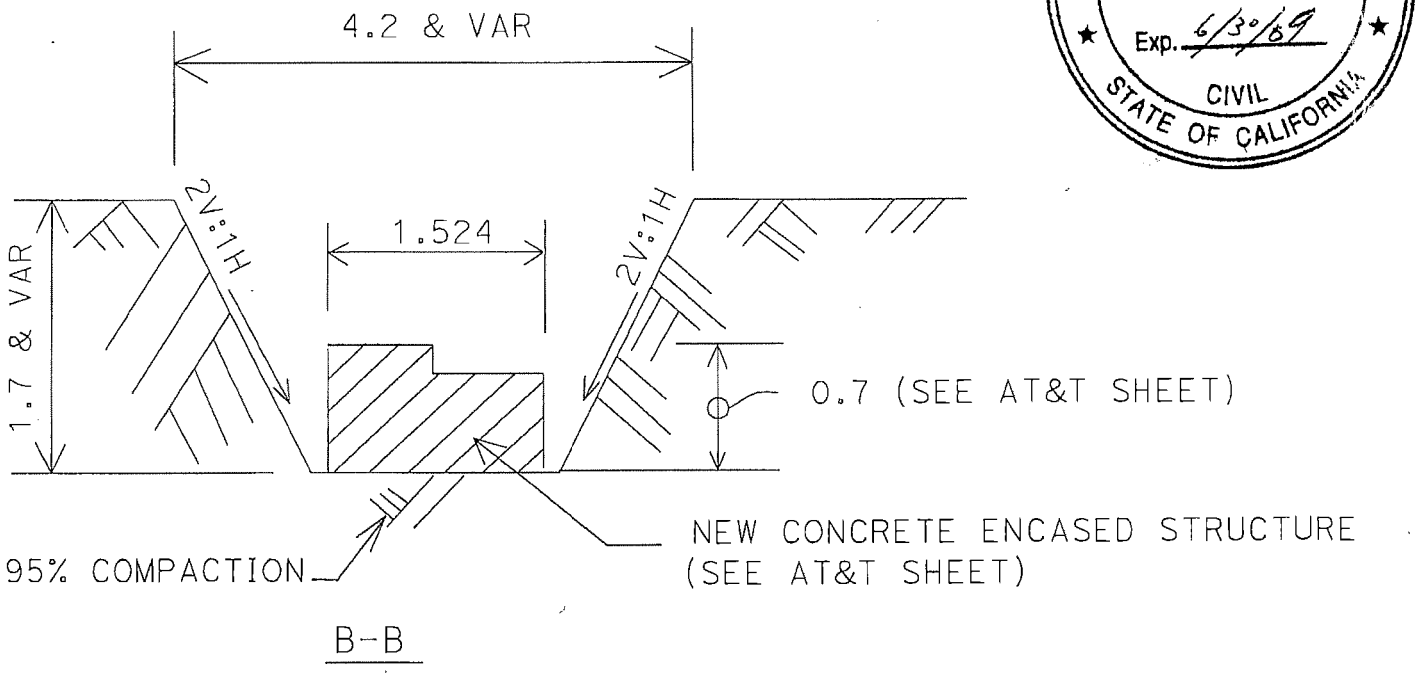

B-B

NOTE: DIMENSIONS ARE IN METER NOT TO SCALE

REGISTERED PROFESSIONAL ENGINEER — ALEC MELKONIANS — C 053452 — Exp. 6/30/09 — CIVIL — STATE OF CALIFORNIA

NOTE:

1- WHEN SHORING IS REQUESTED BY THE ENGINEER, CONTRACTOR SHALL SUBMIT TO THE ENGINEER FOR APPROVAL THE SHORING PLAN WITH APPROPRIATE SHORING METHOD FOR EXCAVATION OF TWO PITS AND TRENCHES

2- PIT'S DIMENSIONS AND LOCATIONS FOR EXCAVATION TO DETERMINE THE ACTUAL DEPTH OF THE EXISTING FIBER OPTIC CONDUITS, ARE AS SHOWN ON LAYOUT PLAN, OR AS DIRECTED BY THE ENGINEER

3- ALL RELOCATION WORK OF FIBER OPTIC CONDUITS INCLUDING ABANDON OF THE EXISTING CONDUITS AND THEIR ENCASING STRUCTURE, AND INSTALLATION OF THE NEW CONDUITS AND THEIR ENCASING STRUCTURE WILL BE PERFORMED BY AT&T

4- EXCAVATED MATERIAL FROM PITS AND TRENCHES SHALL BE USED AS STRUCTURAL BACKFILL WITH 95% COMPACTION ANY EXCESS EXCAVATED MATERIAL TO BE DISPOSED OFF SITE AS HAZARDOUS MATERIAL (TYPE H)

5- DEPTHS AND EXACT LOCATIONS OF OTHER EXISTING UNDERGROUND ULTILITIES ARE TO BE POT-HOLED WITH CARE AND AS DIRECTED BY THE ENGINEER

TYPICAL CROSS SECTION

AT&T UTILITIES RELOCATION ON YBI

REVISED BY | DATE REVISED

CALCULATED-DESIGNED BY | CHECKED BY

FUNCTIONAL SUPERVISOR: ALEC MELKONIANS

STATE OF CALIFORNIA - DEPARTMENT OF TRANSPORTATION
Caltrans

LAST REVISION 11-16-07 | DATE PLOTTED => 27-NOV-2007 | TIME PLOTTED => 15:10

BORDER LAST REVISED 3/1/2007 | RELATIVE BORDER SCALE IS IN MILLIMETERS 0 20 40 60 80 | USERNAME => s118535 | DGN FILE => FO_Trench Xsect.dgn | CU 00000 | EA 0120R4

Dist	COUNTY	ROUTE	KILOMETER POST TOTAL PROJECT	SHEET No.	TOTAL SHEETS
04	SF	80	12.6/13.2	01	01

LICENSED PROJECT ENGINEER

PLANS APPROVAL DATE

Signature
Renewal Date
Date

STATE OF CALIFORNIA

THE STATE OF CALIFORNIA OR ITS OFFICERS OR AGENTS SHALL NOT BE RESPONSIBLE FOR THE ACCURACY OR COMPLETENESS OF ELECTRONIC COPIES OF THIS PLAN SHEET.

REGISTERED PROFESSIONAL ENGINEER
ALEC MELKONIANS
C 053452
Exp. 6/30/09
CIVIL
STATE OF CALIFORNIA

Caltrans Metric

BCDC JURISDICTION

AT&T UTILITIES
RELOCATION ON YBI

CONTRACT NO. 04-0120R4

CONTRACT CHANGE ORDER NO 92

SHEET 3 OF 4

NOTE: DIMENSIONS ARE IN METER

REVISED BY	DATE REVISED

CALCULATED-DESIGNED BY

CHECKED BY

STATE OF CALIFORNIA - DEPARTMENT OF TRANSPORTATION

PROJECT ENGINEER

TOLL BRIDGE DESIGN

Caltrans

LAST REVISION 00-00-00

DATE PLOTTED => 27-NOV-2007
TIME PLOTTED => 14:46

BORDER LAST REVISED 3/1/2007

RELATIVE BORDER SCALE IS IN MILLIMETERS 0 20 40 60 80

USERNAME => s118535
DGN FILE => fiberopic3_rev.dgn

CU 00000

EA 0120R4

CD 4844 (4 98)

AT&T UTILITIES
RELOCATION ON YBI

ISSUE	DATE
1	9/07

MH 4418
10'X5'X8'
VOL=400CU.FT.

11.294
N41°54'28.33"E

WESTERN UNION/MCI/VERIZON
EMPTY CONDUIT

BCDC JURISDICTION

APPROXIMATE LIMITS OF
EXCAVATION FOR FOOTINGS

PIT 2

PT."B"

3.658

3.658

14.480
N44°44'5.9447"E

89' 12-3 ½" FC-B 65
89" 16-5"TC 54
PT."B" TO MH 4418

ELBOW RADIUS TO BE
DETERMINED BY EGINEER

OPEN TRENCH
NEW RELOCATION

15.414
N45°51'42.6881"E

PROPOSED PITS: 10'X10'
EXACT LOCATION TO BE
DETERMINED BY ENGINEER

25.972
N41°57'18.8873"E
89' 12-3 ½" FC-B
89' 16-4 ½"OSC
(ABAN 398' 12-3 ½" FC-B
(ABAN 213' 16-4 ½"OSC
(ABAN "D" 183' 16-5"TC

PLC 26-4" PTS 77 160'
PM 26D 160' 4C
PLC 2-4" SPLIT PTS 77 160'
PM 2D 160' 4M
PT."A" TO PT."B"

15.207
N51°4'54.386"E

PT."A"

3.658

3.658

PIT 1
SEE DETAIL "A"

149' 12-3 ½" FC-B 65
149' 16-4 ½"OSC 54

DETAIL "A"

EXISTING PROFILE

DEAD CA.
CUT & RMV
FROM PIT 1
TO MH 4418

12-3 1/2" FC STRUCTURE
EX. FIBER CABLES
16-4 1/2" OSC/FC STRUCTURE

NEW PROFILE

46L NOTE:
-CALTRANS CONTRACTOR TO DIG PITS, EXPOSE EXISTING DUCT STRUCTUREPIT TO PIT, EXCAVATE NEW TRENCHLINE, AND SHORE AS NECESSARY
-AT&T CONTRACTOR TO BREAKOUT COMPLETE 28 DUCT IN BOTH PITS
-AT&T CONTRACTOR TO BREAK OUT EXISTING STRUCTURE,AS NEEDED, TO FREE FIBER CABLES FROM PIT TO PIT
-AT&T CONTRACTOR TO LIFT FIBER CABLES OUT OF EXISTING TRENCH LINE & PLACE IN NEW TRENCH LINE
-AT&T CONTRACTOR TO TIE INTO EXISTING DUCT STRUCTURE & PLACE 28 NEW DUCT(2 SPLIT WITH FIBER CABLES) FROM PIT TO PIT
-CONCRETE ENCASE STRUCTURE

CALL BEFORE YOU DIG
U S A
800-642-2444

CONTRACT NO. 04-012024
CONTRACT CHANGE ORDER NO 92
SHEET 4 OF 4

SCALE: N.T.S.

REF: COND 3
BP1208AD

SUPER SEG: 2940-6318

	DATE
CONST ARC	
COMP	

GEO/CD R1-01
EXCH B/P
ENGR. D. OHLSSEN TEL 644-7040
ENGR ARC VOSDSOMYO
TYPE OF CONST. RELOCATION
RD/EST NO 6289602
DWG 2 OF 2 P504#1

STATE OF CALIFORNIA - DEPARTMENT OF TRANSPORTATION

CONTRACT CHANGE ORDER MEMORANDUM

DATE: 11/30/2007 Page 1 of 2

TO: MIKE FORNER / DENNIS TURCHON	FILE: E.A. 04 - 0120R4 CO-RTE-PM SF-80-12.6/13.2 FED. NO. ACBRIM-080-1(097)N
FROM: BILL CASEY	07142 MAR -4 08
CCO#: 92 SUPPLEMENT#: 0 Category Code: CLPA	CONTINGENCY BALANCE (incl. this change) $0.00
COST: $175,000.00 INCREASE ☑ DECREASE ☐	HEADQUARTERS APPROVAL REQUIRED? ☑ YES ☐ NO
SUPPLEMENTAL FUNDS PROVIDED: $0.00	IS THIS REQUEST IN ACCORDANCE WITH ENVIRONMENTAL DOCUMENTS? ☑ YES ☐ NO
CCO DESCRIPTION: ETI Fiber Optic Cable Relocation	**PROJECT DESCRIPTION:** CONSTRUCT ROUTE 80 TEMP BYPASS STRUCTURE

Original Contract Time:	Time Adj. This Change:	Previously Approved CCO Time Adjustments:	Percentage Time Adjusted: (including this change)	Total # of Unreconciled Deferred Time CCO(s): (including this change)
475 Day(s)	DEF Day(s)	381 Day(s)	80 %	8

THIS CHANGE ORDER PROVIDES FOR:

relocation of the AT&T fiber optic duct bank that is in conflict with skid bents A6W and A6E of the East Tie-In (ETI) roll-out / roll-in design.

This contract provides for the construction of a temporary detour for both eastbound and westbound I-80 traffic that allows for the tie in of the east span of the new San Francisco Oakland Bay Bridge (SFOBB) to Yerba Buena Island. The detour will allow for the construction of the permanent structure, the Yerba Buena Island Transition Structure, which connects the signature SAS structure to Yerba Buena Island.

The detour consist of three main structures, the East Tie-In (ETI) to the bridge, the West Tie-In to the island and the Viaduct structure between the two tie ins. The contract was awarded as a performance based project with the contractor responsible for meeting the design criteria specified in the contract.

A December 14, 2006 Department strategy memorandum, approved by Tony Anziano, Toll Bridge Program Manager, and Richard Land, Chief Engineer, recommended that the Department assume the design responsibility for the East Tie-In (ETI) structure. Based on this memorandum, the design of the structure was changed from a design that incorporated the existing steel truss bridge with the new structure to a design that replaces the existing structure with a new structure (roll out / roll in).

This contract change order provides for excavation and exposing of the existing duct bank and new alignment, removal and disposal of the abandoned duct bank, backfilling new and existing trench, verifying that the existing Verizon/MCI/Western Union duct bank conduits are abandoned, and maintaining the gravel access road along the south side of existing Bent 52R to maintain access to the 04-0120E4 job site. AT&T will open the existing AT&T duct bank, construct new duct bank, and relocate their fiber optic cable.

For this work the Contractor will be compensated at extra work at force account at an estimated cost of $175,000.00, which will be financed from the contingency fund. Payment for this contract change order will be made under the provisions of Section 5-1.24 "Force Account Payment" of the Special Provisions and Section 4-1.03D "Extra Work" of the Standard Specifications. A cost analysis is on file. The Department is working with AT&T to coordinate this work.

Any time adjustments relating to this work will be deferred as it may impact the controlling operation.

Maintenance concurrence is not required as the fiber optic cable and duct bank is not a State facility, it shall be maintained by the owner, AT&T.

Alec Melkonians, Toll Bridge Program Design Manager, requested this change on 07/26/07. AT&T has approved of this change on 11/07/07. Approval of the change order is recommended by the Resident Engineer.

ADA Notice: For individuals with sensory disabilities, this document is available in alternate formats. For information call: (916) 654-6410 or TDD (916) 654-3880 or write Records and Forms Management, 1120 N Street, MS-89, Sacramento, CA 95814.

CONCURRED BY:		
Construction Engineer:	Raoul Maltez RM	Date 12/3/07
Bridge Engineer:		Date
Project Engineer:	Alec Melkonians	Date 7/26/07
Project Manager:		Date
FHWA Rep.:		Date
Environmental:		Date
Other (specify):	Dave Ohlssen, AT&T	Date 11/7/07
Other (specify):		Date
District Prior Approval By:		Date
HQ (Issue Approve) By:		Date
Resident Engineer's Signature:		Date 11-30-07

ESTIMATE OF COST

	THIS REQUEST	TOTAL TO DATE
ITEMS	$0.00	$0.00
FORCE ACCOUNT	$175,000.00	$175,000.00
AGREED PRICE	$0.00	$0.00
ADJUSTMENT	$0.00	$0.00
TOTAL	$175,000.00	$175,000.00

FEDERAL PARTICIPATION

☐ PARTICIPATING ☐ PARTICIPATING IN PART ☐ NONE
☐ NON-PARTICIPATING (MAINTENANCE) ☐ NON-PARTICIPATING

FEDERAL SEGREGATION (if more than one Funding Source or P.I.P. type)
☐ CCO FUNDED PER CONTRACT ☐ CCO FUNDED AS FOLLOWS

FEDERAL FUNDING SOURCE	PERCENT

ADA Notice: For individuals with sensory disabilities, this document is available in alternate formats. For information call: (916) 654-6410 or TDD (916) 654-3880 or write Records and Forms Management, 1120 N Street, MS-89, Sacramento, CA 95814.

CONTRACT CHANGE ORDER

Change Requested by: Engineer

CCO 93	Suppl. No. 0	Contract No. 04 - 0120R4	Road SF-80-12.6/13.2	FED. AID LOC.: ACBRIM-080-1(097)N

To: CC MYERS INC

You are directed to make the following changes from the plans and specifications or do the following described work not included in the plans and specifications for this contract. ***NOTE: This change order is not effective until approved by the Engineer.***

Description of work to be done, estimate of quantities and prices to be paid. (Segregate between additional work at contract price, agreed price and force account.) Unless otherwise stated, rates for rental of equipment cover only such time as equipment is actually used and no allowance will be made for idle time. This last percentage shown is the net accumulated increase or decrease from the original quantity in the Engineer's Estimate.

Extra Work at Force Account:

The engineer will require scaffold access for several months after erection, until the engineer directs its removal. The Contractor will be paid on a Force Account basis for the rental of the scaffold platform system equipment. The removal work is included in the below lump sum price.

All payment clauses contained within this change order's specifications are amended such that all work performed under this change order will be compensated for as extra work at agreed lump sum or Force Account as part of this change order.

Estimated cost of Extra Work at Force Account $125,000.00

Extra Work at Lump Sum:

Clean and paint existing structural steel in accordance with the Contract Plans for Contract Change Order No. 93 (attached sheets 8 through 10 of this change order) and the Special Provisions for Contract Change Order No. 93 Clean and Paint Existing Structural Steel (attached sheets 3 through 6 of this change order).

Design, provide, install, and remove scaffolding access platform system, including handrails and toe boards in accordance with Special Provisions for Contract Change Order No. 93 Scaffolding (attached sheet 7 of this change order). Provide and install an extra 19 mm (3/4 inch) thick covering layer of plywood decking on the platforms to provide a firm, smooth, trip hazard free work surface suitable for containment of dust and debris. Provide and post signs in conspicuous locations to show the maximum intended working load for each scaffold. The system shall be designed to allow access to accomplish all cleaning and painting for this change order, and to continue to provide a contiguous access system for the engineer and contractor to conduct examinations and further work on the existing bridge at the cleaned and painted areas. Stair access from the ground to the platform is not included under this change order.

This change order price includes full compensation for any required testing and legal disposal of rinse water and blasting debris materials generated during the work.

For this extra work, the Contractor will be compensated $438,725.00. This lump sum constitutes full compensation, including all markups, for furnishing all labor, material, tools, equipment, and incidentals for doing the work involved in this change.

The Contractor shall submit to the Engineer for approval, a schedule of values detailing the cost breakdown of the lump sum item for this change order. The sum of the amounts for the items and work listed in the schedule of values shall be equal to the lump sum portion of the change order price. The schedule of values will be used only to determine progress payments during the progress of the work. No payment for this change order will be made until the schedule of values is approved in writing by the Engineer.

Total Cost of Extra Work at Lump Sum $438,725.00

CONTRACT CHANGE ORDER

Change Requested by: Engineer

CCO 93	Suppl. No. 0	Contract No. 04 - 0120R4	Road SF-80-12.6/13.2	FED. AID LOC.: ACBRIM-080-1(097)N

Estimated Cost: Increase ☑ Decrease ☐ $563,725.00

By reason of this order the time of completion will be adjusted as follows: 0 days

Submitted by

Signature	Resident Engineer BILL CASEY	Date 1-10-08

Approval Recommended by

Signature	Area Construction Manager DENNIS TURCHON	Date 1/11/08

Engineer Approval by

Signature	Area Construction Manager DENNIS TURCHON	Date 2/8/08

We the undersigned contractor, have given careful consideration to the change proposed and agree, if this proposal is approved, that we will provide all equipment, furnish the materials, except as may otherwise be noted above, and perform all services necessary for the work above specified, and will accept as full payment therefor the prices shown above.

NOTE: If you, the contractor, do not sign acceptance of this order, your attention is directed to the requirements of the specifications as to proceeding with the ordered work and filing a written protest within the time therein specified.

Contractor Acceptance by

Signature	(Print name and title) DANIEL E. HAMICK, PRESIDENT	Date 1/29/08

CONTRACT NO. 04-0120R4

The special provisions contained herein have been prepared by or under the direction of the following Registered Persons.

STRUCTURES

Steve Margaris

REGISTERED CIVIL ENGINEER

CONTRACT NO. 04-0120R4

CONTRACT CHANGE ORDER NO 93

SHEET 3 OF 10

10-1.__ CLEAN AND PAINT EXISTING STRUCTURAL STEEL

Metal surfaces of the existing structure shall be cleaned and painted in conformance with the provisions in Section 59-2, "Painting Structural Steel," Section 59-3, "Painting Galvanized Surfaces," and Section 91, "Paint," of the Standard Specifications and these special provisions.

The limits of steel surfaces to be cleaned and painted shall be as shown on the plans.

The existing paint systems consist of materials listed in "Existing Highway Facilities" of these special provisions.

Prior to performing any painting or paint removal, the Contractor shall submit to the Engineer, in conformance with the provisions in Section 5-1.02, "Plans and Working Drawings," of the Standard Specifications, 3 copies of a separate Painting Quality Work Plan (PQWP) for each item of work for which painting or paint removal is to be performed. As a minimum, each PQWP shall include the following:

A. The name of each Contractor or subcontractor to be used.
B. One copy each of all current ASTM and "SSPC: The Society for Protective Coatings" specifications or qualification procedures applicable to the painting or paint removal to be performed. These documents shall become the permanent property of the Department.
C. A copy of the coating manufacturer's guidelines and recommendations for surface preparation, painting, drying, and curing of painted structural steel, including testing methods and maximum allowable levels for soluble salts.
D. Proposed methods and equipment to be used for any paint application.
E. Proof of each of any required certifications, SSPC-QP 1 or SSPC-QP 2.

    1. In lieu of certification in conformance with the requirements in SSPC-QP 1 for this project, the Contractor may submit written documentation showing conformance with the requirements in Section 3, "General Qualification Requirements," of SSPC-QP 1.

F. Proposed methods to control environmental conditions in accordance with the manufacturer's recommendations and these special provisions.
G. Proposed methods to protect the coating during the curing period.
H. Proposed rinse water collection plan.
I. A detailed paint repair plan for the repair of damaged areas.
J. Procedures for containing blast media and water during application of coatings and coating repair of erected steel.
K. Examples of proposed daily reports for all testing to be performed, including type of testing, location, lot size, time, weather conditions, test personnel, and results.

Prior to submitting the PQWP, a prepainting meeting between the Engineer, the Contractor, and a representative from each entity performing painting for this project shall be held to discuss the requirements for the PQWP.

The Engineer shall have 3 weeks to approve the PQWP submittal after a complete plan has been received. No painting or paint removal shall be performed until the PQWP for that work is approved by the Engineer. Should the Engineer fail to complete the review within this time allowance and if, in the opinion of the Engineer, the Contractor's controlling operation is delayed or interfered with by reason of the delay in approving the PQWP, the delay will be considered a right of way delay in conformance with the provisions in Section 8-1.09, "Right of Way Delays," of the Standard Specifications.

It is understood that the Engineer's approval of the Contractor's PQWP shall not relieve the Contractor of any responsibility under the contract for the successful completion of the work in conformity with the requirements of the plans and specifications.

The Contractor shall provide enclosures to permit cleaning and painting during inclement weather. Provisions shall be made to control atmospheric conditions inside the enclosures within specified limits during cleaning and painting operations, drying to solvent insolubility, and throughout the curing period in accordance with the manufacturer's recommendations and these special provisions. Full compensation for providing and maintaining such enclosures shall be considered as included in the prices paid for the various contract items of work requiring paint and no additional compensation will be allowed therefor.

Fresh, potable water with a maximum chloride content of 75 mg/L and a maximum sulfate content of 200 mg/L shall be used for water rinsing or pressure washing operations. No continuous recycling of rinse water will be permitted. If rinse water is collected into a tank and subsequent testing determines the collected water conforms to the specified requirements, reuse may be permitted by the Engineer if no collected water is added to the tank after sample collection for determination of conformance to specified requirements.

CLEANING

Metal surfaces shall be blast cleaned in conformance with the provisions in Section 59-2.03, "Blast Cleaning," of the Standard Specifications. Blast cleaning shall not be performed until the surfaces are thoroughly dry.

Mineral and slag abrasives used for blast cleaning steel surfaces shall conform to the requirements for Class A, Grade 2 to 3 abrasives contained in SSPC-AB 1, "Mineral and Slag Abrasives," of the "SSPC: The Society for Protective Coatings," and shall not contain hazardous material.

Steel abrasives used for blast cleaning steel surfaces shall comply with the requirements of SSPC-AB 3, "Ferrous Metal Abrasive," of the "SSPC: The Society for Protective Coatings." If steel abrasive is recycled through shop or field abrasive blast cleaning units, the recycled abrasive shall conform to the requirements of SSPC-AB 2, "Specification for Cleanliness of Recycled Ferrous Metallic Abrasive," of the "SSPC: The Society for Protective Coatings."

A Certificate of Compliance conforming to the provisions in Section 6-1.07, "Certificates of Compliance," of the Standard Specifications and a Material Safety Data Sheet shall be furnished prior to use for each shipment of blast cleaning material for cleaning existing steel.

Abrasive blast cleaned surfaces shall be tested by the Contractor for soluble salts using a Class A or B retrieval method as described in Technology Guide 15, "Field Methods for Retrieval and Analysis of Soluble Salts on Steel and Other Nonporous Substrates," of the "SSPC: The Society for Protective Coatings," and cleaned so the maximum level of soluble salts does not exceed the lesser of the coating manufacturer's written recommendations or 10 micrograms per square centimeter. Areas of abrasive blast cleaned steel shall be tested at the rate of 3 tests for the first 100 square meters prepared per day, and one test for each additional 100 square meters or portion thereof, at locations selected by the Engineer. When less than 100 square meters of surface area is prepared in a shift, at least 2 tests shall be performed. If levels of soluble salts exceed the maximum allowed by these special provisions, the entire area represented by the testing will be rejected. The Contractor shall perform additional cleaning and testing of rejected areas until soluble salt levels conform to these requirements.

PAINTING

Paint shall be applied to existing metal surfaces in conformance with the following provisions:

A. Precede each specified undercoat by a stripe coat on all edges, corners, seams, crevices, interior angles, junctions of joining members, weld lines, and similar surface irregularities. This stripe coat shall be of sufficient thickness to completely hide the surface being covered and shall be followed as soon as practical by the application of the full undercoat to its specified thickness.
B. Blast cleaned areas shall be coated with the following undercoat paint system in the order listed:

1. The first undercoat paint conforming to the requirements for Red Primer Paint-Waterborne, Formula PWB 145D shall be applied in one or more applications to a dry film thickness of not less than 50 µm nor more than 75 µm.
2. The second undercoat paint conforming to the requirements for Pink Primer Paint-Waterborne, Formula PWB 146D shall be applied in one or more applications to a dry film thickness of not less than 50 µm nor more than 75 µm.
3. The total dry film thickness of all undercoats shall be not less than 100 µm nor more than 150 µm.

A minimum of 12 hours drying time shall be allowed before applying the succeeding undercoat.

The 2 undercoats shall be applied within 30 days of blast cleaning of existing metal surfaces.

MEASUREMENT AND PAYMENT

Dry spot blast cleaning and undercoat painting of blast cleaned areas of existing surfaces will be measured by the square meter of spot blast cleaned areas, and will be paid for as spot blast clean and paint undercoat.

The contract price paid per square meter for spot blast clean and paint undercoat shall include full compensation for furnishing all labor, materials, tools, equipment, and incidentals, and for doing all the work involved in dry spot blast cleaning and painting undercoat on the existing surfaces complete in place, as shown on the plans, as specified in the Standard Specifications and these special provisions, and as directed by the Engineer.

CONTRACT NO. 04-0120R4

CONTRACT CHANGE ORDER NO 93

SHEET 6 OF 10

SCAFFOLDING

Scaffolding shall be defined in accordance with and shall conform to the Construction Safety Orders of the Division of Occupational Safety and Health and these special provisions.

If scaffolding is constructed for this project over or adjacent to traffic, or suspended from the traveled way, the Contractor shall submit to the Engineer working drawings for scaffolding systems in conformance with Section 5-1.02, "Plans and Working Drawings'" of the Standard Specifications, and these special provisions.

Scaffolding working drawings shall include the following:

A. Descriptions, calculations, and values for all loads anticipated during the erection, use, and removal of scaffolding.
B. Methods and equipment for erecting, moving, and removing scaffolding.
C. Design details including bolt layouts, welding details, and any connections to existing structures.
D. Stress sheets including a summary of computed stresses in the (1) scaffolding, (2) connections between scaffolding and any existing structures and (3) existing load supporting members. The computed stresses shall include the effects of erection, movement, and removal of the scaffolding.

If manufactured scaffolding is used, the manufacturer's name, address, and phone number shall be shown on the working drawings.

The working drawings shall be stamped and signed by an engineer who is registered as a Civil Engineer. In addition, prior to submitting the working drawings to the Engineer, the working drawings shall be stamped and signed by an independent reviewer who is registered as a Civil Engineer in the State of California. The independent reviewer shall not be employed by the same entity preparing the working drawings.

The Contractor shall allow 21 days for the review of a complete submittal for scaffolding working drawings. In the event the Engineer fails to complete the review within the time allowed, and if, in the opinion of the Engineer, completion of the work is delayed or interfered with by reason of the Engineer's delay in completing the review, the Contractor will be compensated for any resulting loss, and an extension of time will be granted, in the same manner as provided for in Section 8-1.09, "Right of Way Delays," of the Standard Specifications.

Welding for the manufacturing and erection of scaffolding shall conform to the requirements in AWS D1.1 or D1.2 for steel or aluminum construction respectively.

Full compensation for conforming to the above requirements shall be considered as included in the contract prices paid for the various contract items of work, and no additional compensation will be allowed therefor.

CONTRACT NO. 04-0120R4

CONTRACT CHANGE ORDER NO 93

SHEET 7 OF 10

DIST	COUNTY	ROUTE	KILOMETER POST TOTAL PROJECT	SHEET No	TOTAL
04	SF	80	12.6/13.2	114	214

Caltrans Metric

REGISTERED CIVIL ENGINEER

PLANS APPROVAL DATE

The State of California or its officers or agents shall not be responsible for the accuracy or completeness of electronic copies of this plan sheet.

REGISTERED PROFESSIONAL ENGINEER M.E. Whitesid No. 47977 Exp 12/31/09 CIVIL STATE OF CALIFORNIA

[redacted]

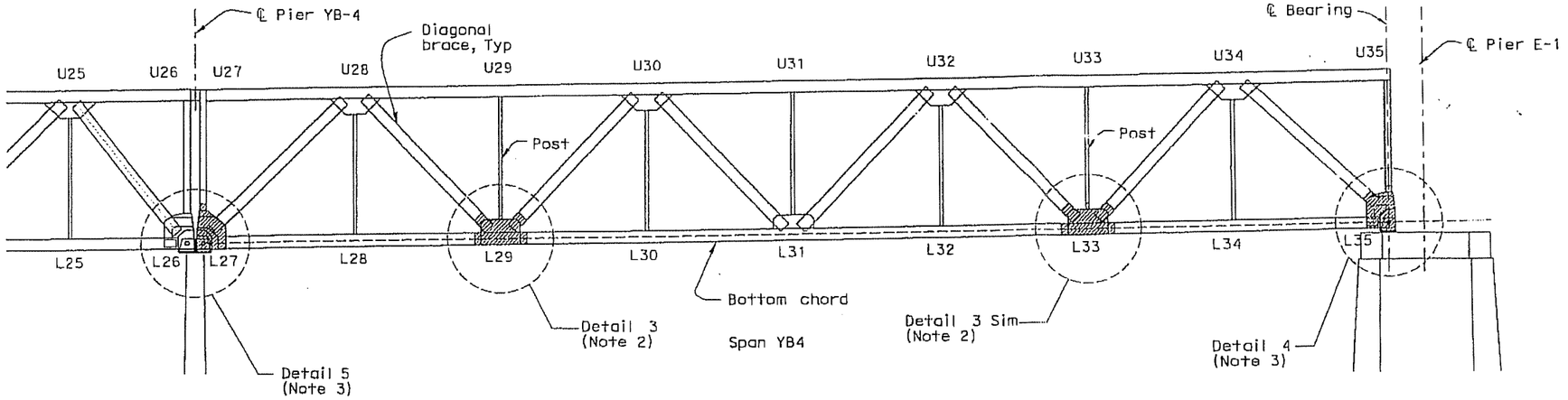

ELEVATION

1:200

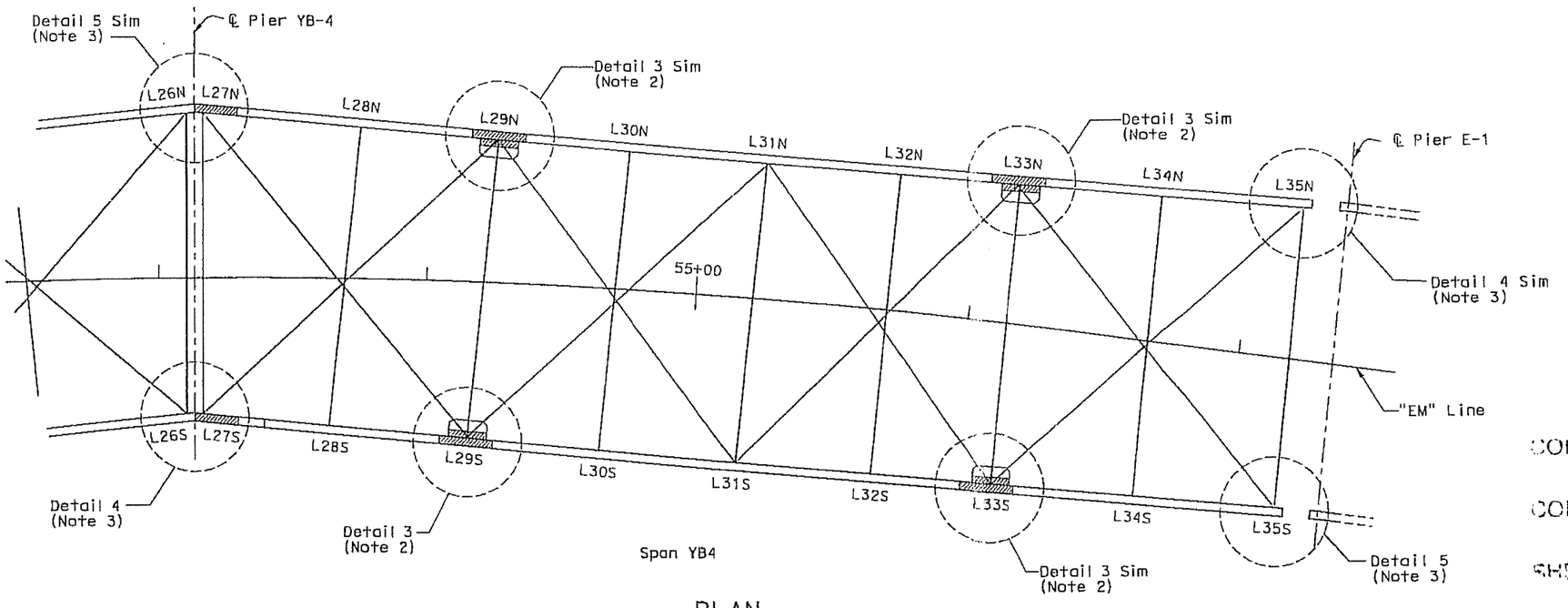

PLAN

1:200

LEGEND

Indicates paint removal prior to roll-out. Paint removal on exterior and interior surfaces within the limits shown

Notes:

1. For removing paint from structural steel, the contractor shall have SSPC certification in conformance with the requirements in Qualification Procedure No. 2. "Standard Procedure for the Qualification of Painting Contractors (Field Removal of Hazardeous Coatings from Complex Structures)" (SSPC-QP2). See standard specification for additional information.
2. For Detail 3 (at L29S) see "Existing Truss Details No. 5" sheet.
3. For Detail 4 (at L27S) and Detail 5 (at L35S), see "Existing Truss Details No. 6" sheet.

CONTRACT NO. 04-0120R4

CONTRACT CHANGE ORDER NO 93

SHEET 8 OF 10

65% SUBMITTAL

FILE => p:\BB\04-012001\ETI\Dgn\YB4paint.dgn

TIME PLOTTED => 7:49:24 PM

DATE PLOTTED => 11/4/2007

ISERNAME => pzhoo

ALL DIMENSIONS ARE IN MILLIMETERS UNLESS OTHERWISE SHOWN

SAN FRANCISCO OAKLAND BAY BRIDGE
EAST SPAN SEISMIC SAFETY PROJECT

EAST TIE-IN

EXISTING TRUSS DETAILS NO. 4

[redacted]

DESIGN	BY	CHECKED
DETAILS	BY	CHECKED
QUANTITIES	BY	CHECKED

PREPARED FOR THE STATE OF CALIFORNIA DEPARTMENT OF TRANSPORTATION

PROJECT MANAGER

BRIDGE NO. 34-0006 (TEMP)

KILOMETER POST 12.6

DESIGN DETAIL SHEET (METRIC) (REV. 3/1/98)
•DATE• •TIME• Pen Table File

ORIGINAL SCALE IN MILLIMETERS FOR REDUCED PLANS 0 10 20 30 40 50 60 70 80 90 100

CU
EA 0120R4

DISREGARD PRINTS BEARING EARLIER REVISION DATES

REVISION DATES (PRELIMINARY STAGE ONLY) 11/05/07

SHEET 114 OF 214

DIST	COUNTY	ROUTE	TOTAL PROJECT	SHEET No	TOTAL
04	SF	80	12.6/13.2	115	214

Caltrans Metric

REGISTERED CIVIL ENGINEER

PLANS APPROVAL DATE

The State of California or its officers or agents shall not be responsible for the accuracy or completeness of electronic copies of this plan sheet.

REGISTERED PROFESSIONAL ENGINEER M.G. Whiteside No. 47977 Exp. 12/31/09 CIVIL STATE OF CALIFORNIA

[redacted]

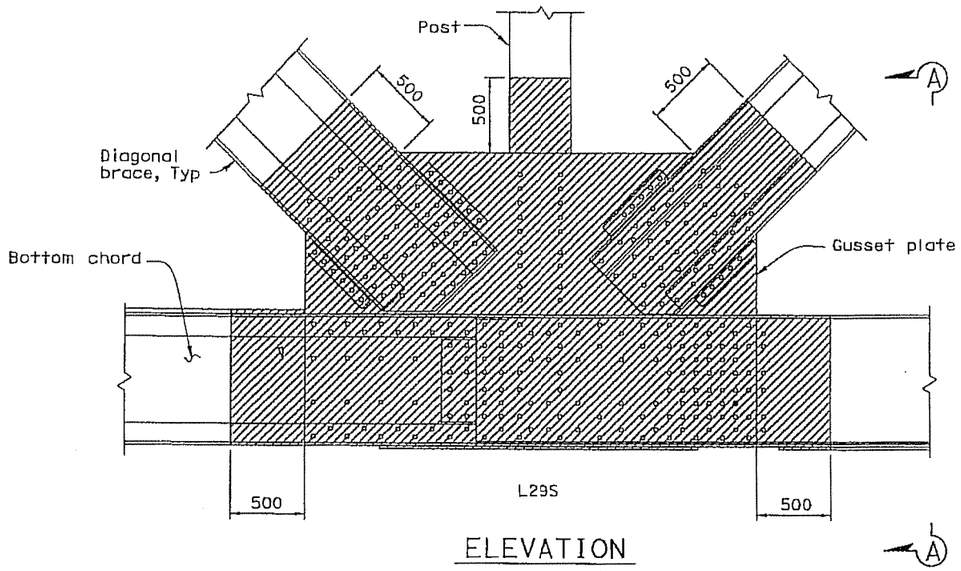

ELEVATION

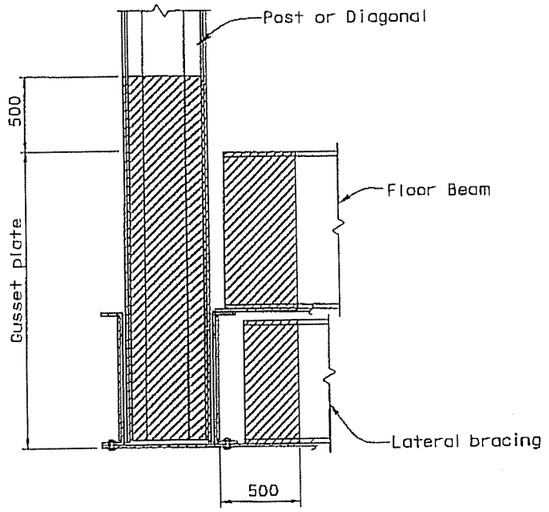

SECTION A-A

LEGEND

Indicates paint removal prior to roll-out. Paint removal on exterior and interior surfaces within the limits shown.

Notes:

1. For paint removal layout, see "Existing Truss Details No. 4" sheet.

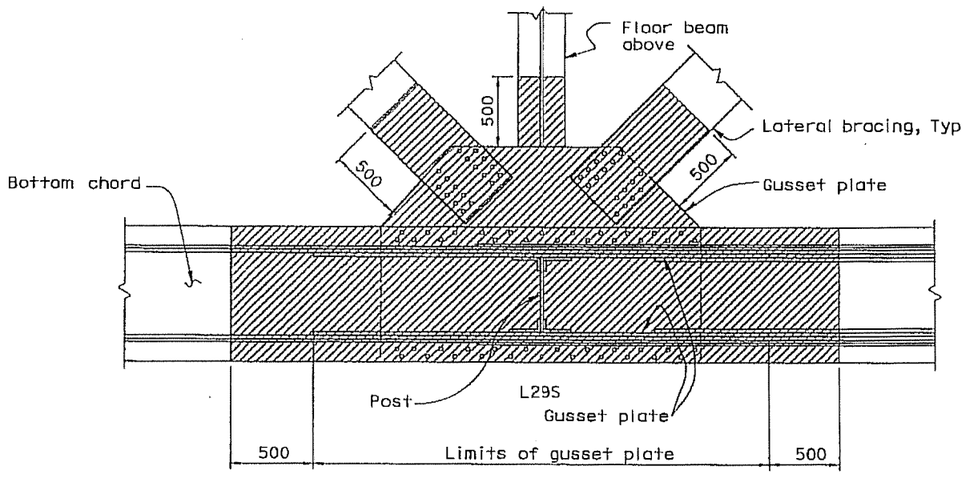

PLAN

DETAIL 3
1:20

CONTRACT NO. 04-0120R4

CONTRACT CHANGE ORDER NO 93

SHEET 9 OF 10

65% SUBMITTAL

FILE => p:\BB\04-012001\ETI\Dgn\Y84paint2.dgn

TIME PLOTTED => 7:42:07 PM

DATE PLOTTED => 11/4/2007

USERNAME => pzhao

ALL DIMENSIONS ARE IN MILLIMETERS UNLESS OTHERWISE SHOWN

SAN FRANCISCO OAKLAND BAY BRIDGE
EAST SPAN SEISMIC SAFETY PROJECT

EAST TIE-IN

EXISTING TRUSS DETAILS NO. 5

[redacted]

DESIGN	BY	CHECKED
DETAILS	BY	CHECKED
QUANTITIES	BY	CHECKED

PREPARED FOR THE STATE OF CALIFORNIA DEPARTMENT OF TRANSPORTATION

PROJECT MANAGER

BRIDGE NO. 34-0006 (TEMP)

KILOMETER POST 12.6

DISREGARD PRINTS BEARING EARLIER REVISION DATES 11/05/01

REVISION DATES (PRELIMINARY STAGE ONLY)

SHEET 115 OF 214

DESIGN DETAIL SHEET (METRIC) (REV. 3/1/98)
•DATE• •TIME• Pen Table File

ORIGINAL SCALE IN MILLIMETERS FOR REDUCED PLANS 0 10 20 30 40 50 60 70 80 90 100

CU
EA 0120R4

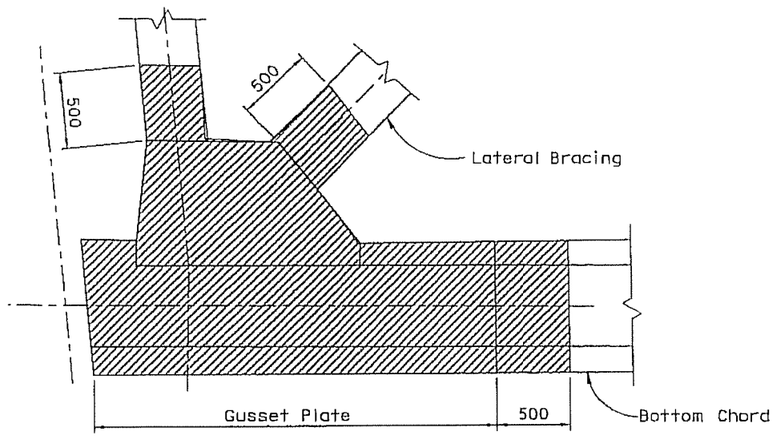

PLAN

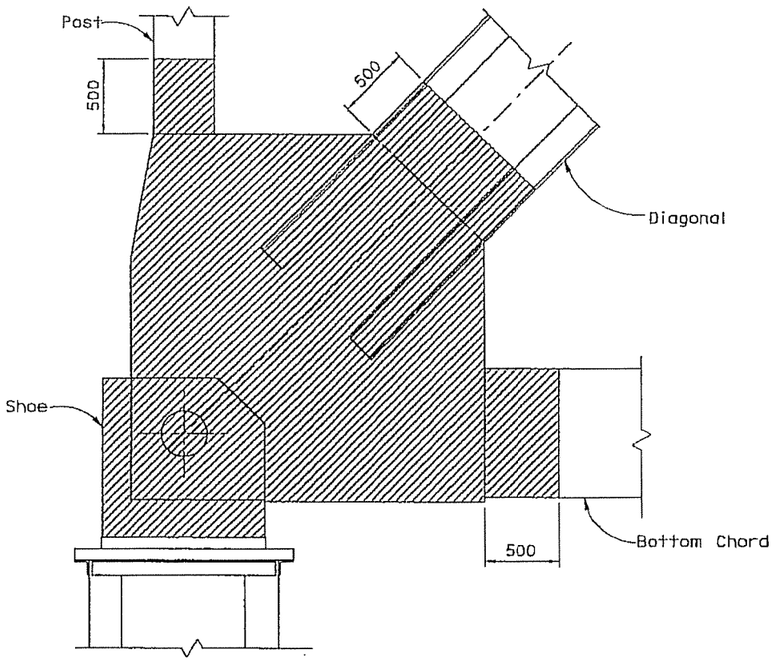

ELEVATION

DETAIL 4

1:20

Bearing Shoe at Pier YB-4

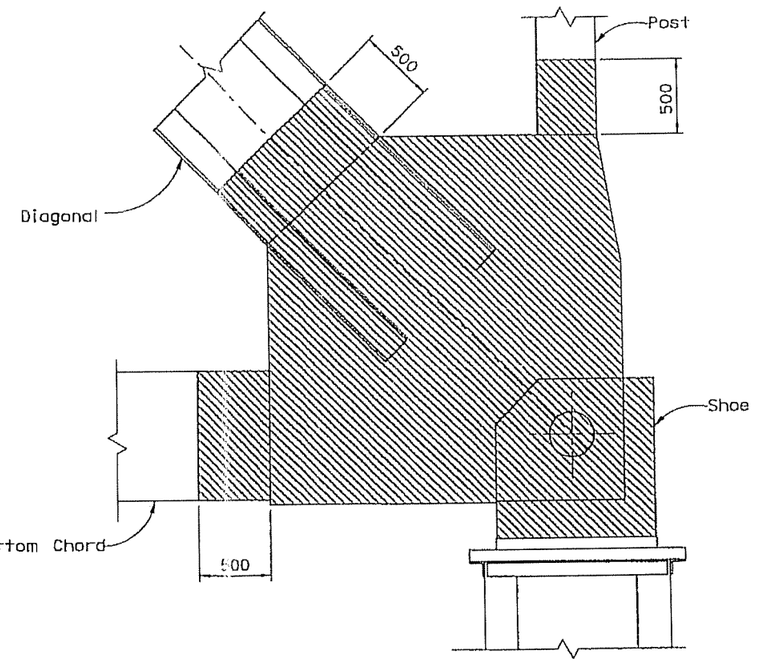

ELEVATION

DETAIL 5

1:20

Bearing Shoe at Pier E1

DIST	COUNTY	ROUTE	TOTAL PROJECT	No	
04	SF	80	12.6/13.2	116	214

Caltrans Metric

REGISTERED CIVIL ENGINEER

REGISTERED PROFESSIONAL ENGINEER M.G. Ulitsky No 42977 Exp 12/31/09 CIVIL STATE OF CALIFORNIA

PLANS APPROVAL DATE

The State of California or its officers or agents shall not be responsible for the accuracy or completeness of electronic copies of this plan sheet.

[redacted]

LEGEND

▨ Indicates paint removal prior to roll-out. Paint removal on exterior and interior surfaces within the limits shown.

Notes:

1. For paint removal layout, see "Existing Truss Details No. 4" sheet.

65% SUBMITTAL

FILE => p:\BB\04-0120O1\ETI\Dgn\YB4paint2A.dgn

TIME PLOTTED => 7:47:22 PM

DATE PLOTTED => 11/4/2007

USERNAME => pzhao

CONTRACT NO. 04-0120R4

CONTRACT CHANGE ORDER NO 93

SHEET 10 OF 10

ALL DIMENSIONS ARE IN MILLIMETERS UNLESS OTHERWISE SHOWN

SAN FRANCISCO OAKLAND BAY BRIDGE
EAST SPAN SEISMIC SAFETY PROJECT

EAST TIE-IN

EXISTING TRUSS DETAILS NO. 6

[redacted]

DESIGN	BY	CHECKED	
DETAILS	BY	CHECKED	
QUANTITIES	BY	CHECKED	

PREPARED FOR THE STATE OF CALIFORNIA DEPARTMENT OF TRANSPORTATION

PROJECT MANAGER

BRIDGE NO. 34-0006 (TEMP)

KILOMETER POST 12.6

CU EA 0120R4

DISREGARD PRINTS BEARING EARLIER REVISION DATES →

REVISION DATES (PRELIMINARY STAGE ONLY) 11/05/07

SHEET 116 OF 214

DESIGN DETAIL SHEET (METRIC) (REV. 3/1/98) ●DATE● ●TIME● Pen Table File

ORIGINAL SCALE IN MILLIMETERS FOR REDUCED PLANS 0 10 20 30 40 50 60 70 80 90 100

FILE => p:\BB\04-0120O1\ETI\Dgn\YB4paint2A.dgn

STATE OF CALIFORNIA - DEPARTMENT OF TRANSPORTATION

CONTRACT CHANGE ORDER MEMORANDUM

DATE: 12/31/2007 Page 1 of 2

TO: MIKE FORNER / DENNIS TURCHON	FILE: E.A. 04 - 0120R4
	CO-RTE-PM SF-80-12.6/13
FROM: BILL CASEY	FED. NO. ACBRIM-080-1(097)N

2007145 MAR -4 08

CCO#: 93 SUPPLEMENT#: 0 Category Code: CHPA	CONTINGENCY BALANCE (incl. this change) $122,902,774.41
COST: $563,725.00 INCREASE ☑ DECREASE ☐	HEADQUARTERS APPROVAL REQUIRED? ☑ YES ☐ NO
SUPPLEMENTAL FUNDS PROVIDED: $0.00	IS THIS REQUEST IN ACCORDANCE WITH ENVIRONMENTAL DOCUMENTS? ☑ YES ☐ NO
CCO DESCRIPTION: Span YB-4 Platform & Lead Abatement	**PROJECT DESCRIPTION:** CONSTRUCT ROUTE 80 TEMP BYPASS STRUCTURE

Original Contract Time:	Time Adj. This Change:	Previously Approved CCO Time Adjustments:	Percentage Time Adjusted: (including this change)	Total # of Unreconciled Deferred Time CCO(s): (including this change)
475 Day(s)	0 Day(s)	1195 Day(s)	252 %	7

THIS CHANGE ORDER PROVIDES FOR:

The construction of a temporary access walkway under the existing bridge, and abatement of existing lead-based paint, in accordance with Sheets 1 through 10 of this change order.

This contract provides for the construction of a temporary detour for both eastbound and westbound I-80 traffic that allows for the tie in of the east span of the new San Francisco Oakland Bay Bridge (SFOBB) to Yerba Buena Island. A December 14, 2006 Department strategy memorandum, approved by Tony Anziano, Toll Bridge Program Manager, and Richard Land, Chief Engineer, recommended that the Department assume the design responsibility for the East Tie-In (ETI) structure. Based on this memorandum, the design of the structure was changed from a design that incorporated the existing steel truss bridge to a design that replaces the steel truss bridge with a new structure (roll out / roll in).

As a consequence of the change, the engineer needs access to examine existing members at the ETI before completing design. The anticipated design will require stiffening of some members of the existing structure at the contact points of the roll out system. This change order will provide a hanging scaffold system to allow access for the engineer's examination.

Since the existing steel bridge has been painted with lead based paint over the years, that paint will have to be removed prior to adding stiffeners to the structure. Under this CCO, the Contractor will utilize the temporary access walkway to abate the lead paint in 8 areas that have been designated by the engineer as anticipated stiffener and contact point locations for the lifting mechanism. The location-specific abatement will be accomplished prior to the final design of the stiffening and lifting system.

For this work the Contractor will be compensated at the agreed lump sum of $438,725.00, which will be financed from the contract's contingency funds. A detailed cost analysis for this change is on file in the project records. The agreed lump sum will cover the installation of the walkway, the lead paint abatement work, and the removal of the walkway. Since the engineer may require this scaffold access for anywhere from 6 months to 18 months after erection, in addition to the agreed lump sum, the Contractor will be paid on a Force Account basis for scaffold rental and maintenance costs for the walkway system, as directed by the engineer. The additional Force Account Amount of this change order will be $125,000.00.

No time adjustment is warranted for this change, as it does not affect the controlling operation.

Approval of the change order is recommended by the Resident Engineer.

Mike Whiteside, YBI Coordination Engineer for the SFOBB East Spans Seismic Safety Project requested this change on November 30, 2007 (with supplemental requests dated December 12, 2007).

This change was cocurred by Alec Melkonians - Asst. Project Manager, Hong Wong - Project Engineer, Lina Ellis - Structures Maintenance, Robert Kobal - HQ Assistant Construction Coordinator, and Amy Fowler - CT Environmental Manager.

ADA Notice: For individuals with sensory disabilities, this document is available in alternate formats. For information call: (916) 654-6410 or TDD (916) 654-3880 or write Records and Forms Management, 1120 N Street, MS-89, Sacramento, CA 95814.

CONCURRED BY:			
Construction Engineer:	Mahantesh Anigol, Dist. Rep	Date	
Bridge Engineer:	Mike Whiteside, Toll Bridge Design	Date	11/30/07
Project Engineer:	Hong Wong, PE	Date	1/8/08
Project Manager:	Alec Melkonians	Date	1/9/08
FHWA Rep.:		Date	
Environmental:	Amy Fowler - Permit Compliance	Date	2/20/08
Other (specify):	Lina Ellis, Maintenance	Date	1/9/08
Other (specify):	Robert Kobal, HQ Asst.Const.Coor	Date	1/9/08
District Prior Approval By:		Date	
HQ (Issue Approve) By:	Ken Darby, HQ CCO Engineer	Date	2/13/08
Resident Engineer's Signature:		Date	

1-10-08

ESTIMATE OF COST

	THIS REQUEST	TOTAL TO DATE
ITEMS	$0.00	$0.00
FORCE ACCOUNT	$125,000.00	$125,000.00
AGREED PRICE	$438,725.00	$438,725.00
ADJUSTMENT	$0.00	$0.00
TOTAL	$563,725.00	$563,725.00

FEDERAL PARTICIPATION

☐ PARTICIPATING ☐ PARTICIPATING IN PART ☐ NONE
☐ NON-PARTICIPATING (MAINTENANCE) ☑ NON-PARTICIPATING

FEDERAL SEGREGATION (if more than one Funding Source or P.I.P. type)
☑ CCO FUNDED PER CONTRACT ☐ CCO FUNDED AS FOLLOWS

FEDERAL FUNDING SOURCE	PERCENT

ADA Notice: For individuals with sensory disabilities, this document is available in alternate formats. For information call: (916) 654-6410 or TDD (916) 654-3880 or write Records and Forms Management, 1120 N Street, MS-89, Sacramento, CA 95814.

CONTRACT CHANGE ORDER

Change Requested by: Engineer

CCO 93	Suppl. No. 1	Contract No. 04 - 0120R4	Road SF-80-12.6/13.2	FED. AID LOC.: ACBRIM-080-1(097)N

To: **CC MYERS INC**

You are directed to make the following changes from the plans and specifications or do the following described work not included in the plans and specifications for this contract. ***NOTE: This change order is not effective until approved by the Engineer.***

Description of work to be done, estimate of quantities and prices to be paid. (Segregate between additional work at contract price, agreed price and force account.) Unless otherwise stated, rates for rental of equipment cover only such time as equipment is actually used and no allowance will be made for idle time. This last percentage shown is the net accumulated increase or decrease from the original quantity in the Engineer's Estimate.

Extra Work at Lump Sum:

Clean and paint existing structural steel in accordance with Sheets 2 through 4 of this change order and the Special Provisions of the original Contract Change Order No. 93.

Design, provide, install, and remove scaffolding access platform system, including handrails and toe boards in accordance with Special Provisions. Provide and install an extra 19 mm (3/4 inch) thick covering layer of plywood decking on the platforms to provide a firm, smooth, trip-hazard free work surface suitable for containment of dust and debris. Provide and post signs in conspicuous locations to show the maximum intended working load for each scaffold. The system shall be designed to allow access to accomplish all cleaning and painting for this change order, and to continue to provide a contiguous access system for the engineer and contractor to conduct examinations and further work on the existing bridge at the cleaned and painted areas. The lump sum change order price includes the use of this scaffold for access by the Contractor and Engineer for other steel erection activities for several weeks after cleaning and painting operation, until the Engineer authorizes its removal. The removal work is included in the lump sum price.

This change order price includes full compensation for any required testing and legal disposal of rinse water and blasting debris materials generated during the work.

For this extra work, the Contractor will be compensated $347,417.00. This lump sum constitutes full compensation, including markups, for furnishing all labor, material, tools, equipment, and incidentals for doing the work involved in this change.

Total Cost of Extra Work at Lump Sum $347,417.00

Estimated Cost: **Increase** ☑ **Decrease** ☐ **$347,417.00**

By **reason of this order the time of completion will be adjusted as follows:** 0 days

Submitted by

Signature	Resident Engineer	Date
	BILL CASEY	6-4-09

Approval Recommended by

Signature	Area Construction Manager	Date
Deanna Vilcheck	DEANNA VILCHECK	6/5/09

Engineer Approval by

Signature	Area Construction Manager	Date
Deanna Vilcheck	DEANNA VILCHECK	6/9/09

We the undersigned contractor, have given careful consideration to the change proposed and agree, if this proposal is approved, that we will provide all equipment, furnish the materials, except as may otherwise be noted above, and perform all services necessary for the work above specified, and will accept as full payment therefor the prices shown above.

NOTE: If you, the contractor, do not sign acceptance of this order, your attention is directed to the requirements of the specifications as to proceeding with the ordered work and filing a written protest within the time therein specified.

Contractor Acceptance by

Signature	(Print name and title)	Date
	DANIEL E. HUMICK, PRESIDENT	6/08/09

STATE OF CALIFORNIA - DEPARTMENT OF TRANSPORTATION

CONTRACT CHANGE ORDER MEMORANDUM

DATE: 5/28/2009 Page 1 of 2

TO: MIKE FORNER / DEANNA VILCHECK	FILE: E.A. 04 - 0120R4
FROM: BILL CASEY	CO-RTE-PM SF-80-12.6/13.2
	FED. NO. ACBRIM-080-1(097)N
CCO#: 93 SUPPLEMENT#: 1 Category Code: CHPA	CONTINGENCY BALANCE (incl. this change) $47,214,796.59
COST: $347,417.00 INCREASE ☑ DECREASE ☐	HEADQUARTERS APPROVAL REQUIRED? ☐ YES ☑ NO
SUPPLEMENTAL FUNDS PROVIDED: $0.00	IS THIS REQUEST IN ACCORDANCE WITH ENVIRONMENTAL DOCUMENTS? ☑ YES ☐ NO
CCO DESCRIPTION: ETI Additional Lead Paint Abatement	PROJECT DESCRIPTION: CONSTRUCT ROUTE 80 TEMP BYPASS STRUCTURE

Original Contract Time:	Time Adj. This Change:	Previously Approved CCO Time Adjustments:	Percentage Time Adjusted: (including this change)	Total # of Unreconciled Deferred Time CCO(s): (including this change)
475 Day(s)	0 Day(s)	1195 Day(s)	252 %	7

THIS CHANGE ORDER PROVIDES FOR:

the construction of additional temporary access walkway under the existing bridge at Pier YB3 and Span YB4, and the abatement of existing lead-based paint in accordance with Sheets 2 through 4 of this change order and Special Provisions of the original Contract Change Order No. 93.

This project, the Temporary Bypass Structure (TBS), provides for the construction of a detour that will allow for the tie in of the new east span of the San Francisco Oakland Bay Bridge to Yerba Buena Island. The TBS encompasses three main structures, the East Tie-In (ETI) to the existing bridge, the West Tie-In (WTI) to Yerba Buena Island, and the Viaduct structure between the two tie ins.

A December 14, 2006 Department strategy memorandum, approved by Tony Anziano, Toll Bridge Program Manager, and Richard Land, Chief Engineer, recommended that the Department assume the design responsibility for the East Tie-In (ETI) portion of this contract. Based on this memorandum, the design of the structure was changed from a design that incorporated the existing steel truss bridge with the new structure to a design that replaces the existing structure with a new structure (roll out / roll in).

As a consequence of the change, the East Tie-In Roll-Out/Roll-In design requires modification to some of the members of the existing structure. CCO No. 93 provided for lead paint abatement and access for Span YB-4, and CCO No. 172 provided for additional lead paint abatement and access at existing span YB-3. The Engineer has designated additional areas that require lead paint abatement prior to modification to the structure. Under this change order, the Contractor will install additional temporary access walkways and abate the lead paint in fourteen additional areas that have been designated by the Engineer.

For this work the Contractor will be compensated at the agreed lump sum of $347,417.00, which will be financed from the contract's contingency funds. A detailed cost analysis for this change is on file in the project records. The agreed lump sum will cover the installation of the walkway, the lead paint abatement work, and the removal of the walkway.

No time adjustment is warranted for this change, as it does not affect the controlling operation.

Mike Whiteside - YBI Coordination Engineer requested this change per Memorandum on August 21, 2008 with concurrences by Alec Melkonians - Asst. Project Manager and Hong Wong - Project Engineer.

Maintenance concurrence for this change order is not required, as this is not part of the permanent structure.

ADA Notice: For individuals with sensory disabilities, this document is available in alternate formats. For information call: (916) 654-6410 or TDD (916) 654-3880 or write Records and Forms Management, 1120 N Street, MS-89, Sacramento, CA 95814.

TELECOPY

California Department of Transportation

CONSTRUCTION DIVISION

TO: District 4 CCO Desk

Date: 6/8/2009

Contract No.: 4 - 0120R4

Road: SF-80-12.6/13.2

FED. No.: ACBRIM-080-1(097)N

To: SARTIPI - 04

Attention: 04 - ALVAREZ

HQ Direction: TO ISSUE AND APPROVE

CCO No. 093 **Sup. No.** 1 **Rev. No.** 0

Per Your Submittal Dated: 6/5/2009 **CCO Category Code:** C - H - P - A

COMPENSATE THE CONTRACTOR FOR ADDITIONAL TEMPORARY ACCESS WALKWAYS UNDER THE EXISTING BRIDGE AT PIER YB3 AND SPAN YB4, AND ABATE EXISTING LEAD-BASED PAINT IN FOURTEEN ADDITIONAL AREAS.

NOTE: I&A IS CONTINGENT ON OBTAINING THE CONTRACTOR'S SIGNATURE ON THE EXTRA WORK AT LUMP SUM CCO. FAILURE TO OBTAIN THE CONTRACTOR'S SIGNATURE WILL REQUIRE A REVISED CCO AND NEW I&A REQUEST.

TOTAL COST FOR THIS CHANGE, INCLUDING THIS SUPPLEMENTAL, IS SHOWN AS $911,142.00 WITH NO TIME ADJUSTMENT.

Items:	$0.00
Force Account:	$0.00
Agreed Price:	$347,417.00
Adj. of Comp.	$0.00
Total:	**$347,417.00**
Time:	**(NONE)**

ROB EFFINGER,
Acting Assistant Division Chief, by:

Bob Molera

Bob Molera
Division of Construction
1120 "N" Street, MS-44, Sacramento, CA 95814
Fax Number: (916) 654-5735
To Confirm Transmission, Call (916) 654-2735

STATE OF CALIFORNIA - DEPARTMENT OF TRANSPORTATION

CONTRACT CHANGE ORDER

Change Requested by: Engineer

CCO 93	Suppl. No. 2	Contract No. 04 - 0120R4	Road SF-80-12.6/13.2	FED. AID LOC.: ACBRIM-080-1(097)N

To: **CC MYERS INC**

You are directed to make the following changes from the plans and specifications or do the following described work not included in the plans and specifications for this contract. ***NOTE: This change order is not effective until approved by the Engineer.***

Description of work to be done, estimate of quantities and prices to be paid. (Segregate between additional work at contract price, agreed price and force account.) Unless otherwise stated, rates for rental of equipment cover only such time as equipment is actually used and no allowance will be made for idle time. This last percentage shown is the net accumulated increase or decrease from the original quantity in the Engineer's Estimate.

Extra Work at Force Account:

Provide additional funds to pay for the rental of a scaffold platform system in the lead-based paint abatement work under the existing San Francisco-Oakland Bay Bridge (SFOBB).

Estimated cost of Extra Work at Force Account $300,000.00

RECEIVED
2009 NOV 16 AM 11:28

Estimated Cost: **Increase** ☑ **Decrease** ☐ **$300,000.00**

By reason of this order the time of completion will be adjusted as follows: 0 days

Submitted by		
Signature	**Resident Engineer** BILL CASEY	**Date** 10-3-09
Approval Recommended by		
Signature	**Area Construction Manager** MIKE FORNER	**Date** 10-12-09
Engineer Approval by		
Signature	**Area Construction Manager** MIKE FORNER	**Date** 10-21-09

We the undersigned contractor, have given careful consideration to the change proposed and agree, if this proposal is approved, that we will provide all equipment, furnish the materials, except as may otherwise be noted above, and perform all services necessary for the work above specified, and will accept as full payment therefor the prices shown above.

NOTE: If you, the contractor, do not sign acceptance of this order, your attention is directed to the requirements of the specifications as to proceeding with the ordered work and filing a written protest within the time therein specified.

Contractor Acceptance by		
Signature N/A	**(Print name and title)** N/A	**Date** N/A

STATE OF CALIFORNIA - DEPARTMENT OF TRANSPORTATION

CONTRACT CHANGE ORDER MEMORANDUM

DATE: 8/18/2009 Page 1 of 1

TO: MIKE FORNER / DEANNA VILCHECK

FROM: BILL CASEY

FILE: E.A. 04 - 0120R4
CO-RTE-PM SF-80-12.6/13.2
FED. NO.

CCO#: 93 | SUPPLEMENT#: 2 | Category Code: CHSX

CONTINGENCY BALANCE (incl. this change) $55,775,400.59

COST: $300,000.00 INCREASE ☑ DECREASE ☐

HEADQUARTERS APPROVAL REQUIRED? ☑ YES ☐ NO

SUPPLEMENTAL FUNDS PROVIDED: $0.00

IS THIS REQUEST IN ACCORDANCE WITH ENVIRONMENTAL DOCUMENTS? ☑ YES ☐ NO

CCO DESCRIPTION:
Scaffold Access Additional Funds

PROJECT DESCRIPTION:
CONSTRUCT ROUTE 80 TEMP BYPASS STRUCTURE

Original Contract Time:	Time Adj. This Change:	Previously Approved CCO Time Adjustments:	Percentage Time Adjusted: (including this change)	Total # of Unreconciled Deferred Time CCO(s): (including this change)
475 Day(s)	0 Day(s)	1195 Day(s)	252 %	7

THIS CHANGE ORDER PROVIDES FOR:

additional funds for the rental of the East Ti-In access platform.

The original Change Order No. 93 along with Supplement No. 1 provided for the construction of a temporary access platform and the ensuing lead abatement of the existing YB4 steel truss. The installation and removal of the platform along with the actual lead abatement work was compensated by an agreed lump sum. The rental of the platform, which also provides access for the engineer to the existing truss, is compensated at force account.

It is now anticipated that the existing funding provided for the platform rental is inadequate, as the duration that the platform is required to be in place shall exceed the original estimate. In addition to this, the platform has to be adjusted in order to allow for concurrent work to be performed in the area.

The work shall be performed as extra work at force account at an estimated cost of $300,000 and shall be financed from the contract's contingency funds. A cost analysis is on file.

No adjustment of contract time is warranted, as the work will not affect the controlling operation.

The Contractor's signature is not required for additional funds for Extra Work at Force Account change orders. Therefore this change order is being issued unilaterally.

This change was discussed and concurred with by Alec Melkonians - Asst. Project Manager and Hong Wong - Project Engineer. TBPOC Approval granted on 10/16/2009.

Maintenance concurrence is not required, as this change order will not affect any permanent roadway features.

CONCURRED BY:

Construction Engineer:	Bill Casey, Resident Engineer	Date 10-3-09
Bridge Engineer:		Date
Project Engineer:	Hong Wong, PE	Date 9/29/09
Project Manager:	Alec Melkonians	Date 8/18/09
FHWA Rep.:		Date
Environmental:		Date
Other (specify):		Date
Other (specify):		Date
District Prior Approval By:		Date
HQ (Issue Approve) By:	Bob Molera, HQ CCO Engineer	Date 10/15/09
Resident Engineer's Signature:		Date

10-3-09

ESTIMATE OF COST

	THIS REQUEST	TOTAL TO DATE
ITEMS	$0.00	$0.00
FORCE ACCOUNT	$300,000.00	$425,000.00
AGREED PRICE	$0.00	$786,142.00
ADJUSTMENT	$0.00	$0.00
TOTAL	$300,000.00	$1,211,142.00

FEDERAL PARTICIPATION

☐ PARTICIPATING ☐ PARTICIPATING IN PART ☑ NONE
☐ NON-PARTICIPATING (MAINTENANCE) ☐ NON-PARTICIPATING

FEDERAL SEGREGATION (if more than one Funding Source or P.I.P. type)
☐ CCO FUNDED PER CONTRACT ☐ CCO FUNDED AS FOLLOWS

FEDERAL FUNDING SOURCE	PERCENT

ADA Notice: For individuals with sensory disabilities, this document is available in alternate formats. For information call: (916) 654-6410 or TDD (916) 654-3880 or write Records and Forms Management, 1120 N Street, MS-89, Sacramento, CA 95814.

CONTRACT CHANGE ORDER

Change Requested by: Engineer

CCO 94	Suppl. No. 0	Contract No. 04 - 0120R4	Road SF-80-12.6/13.2	FED. AID LOC.: ACBRIM-080-1(097)N

To: **CC MYERS INC**

You are directed to make the following changes from the plans and specifications or do the following described work not included in the plans and specifications for this contract. ***NOTE: This change order is not effective until approved by the Engineer.***

Description of work to be done, estimate of quantities and prices to be paid. (Segregate between additional work at contract price, agreed price and force account.) Unless otherwise stated, rates for rental of equipment cover only such time as equipment is actually used and no allowance will be made for idle time. This last percentage shown is the net accumulated increase or decrease from the original quantity in the Engineer's Estimate.

Adjustment of Compensation at Lump Sum:

Furnish and install temporary shoring soldier piles and cast-in-drilled-Hole (CIDH) concrete piling as shown on attached plans and specifications (Sheets 2 through 21 of this change order).

For this work, the contractor will be compensated a lump sum of $153,593.00. The sum includes full and final compensation for all mobilization and demobilization costs necessary to perform this work, all associated spoil removal and hauling costs, and all markups, associated with the work of this change. The agreed lump sum price provided under this change order is based on all excavated soil, including drill spoils, which will be either stored on site, or at the Contractor's stockpile site on Treasure Island. In the event that any of the stockpiled soil generated by the work of this change order needs to be disposed of off-site, all transportation and disposal costs for off-site disposal shall be paid for separately from this change order.

The following items are to be furnished by contractor under this change order, and stored at site for future installation: Steel lagging plates and angle iron, and remainder of the piles required to complete installation.

The following 3 items of work shown on these drawings have not been addressed by this change order and shall remain outstanding:
1. Installation of steel plate lagging between soldier piles.
2. Installation of lagging support angle iron at existing wall and wedge anchors (per Detail A shown on Sheet 2A of 5).
3. Installation of top portion of H-Piles. The top of the H-piles are to be cut off at approximate elevation 49.0, to be below the top of the AC paving which has been temporarily lowered in this area. This change order excludes any provisions for splicing these piles.

Total Cost of Adjustment of Compensation at Lump Sum $153,593.00

Estimated Cost: **Increase** ☑ **Decrease** ☐ **$153,593.00**

By reason of this order the time of completion will be adjusted as follows: 0 days

Submitted by

Signature	Resident Engineer	Date
	BILL CASEY	3-16-09

Approval Recommended by

Signature	Area Construction Manager	Date
Deanna Vilcheck	DEANNA VILCHECK	3/16/09

Engineer Approval by

Signature	Area Construction Manager	Date
Deanna Vilcheck	DEANNA VILCHECK	5/6/09

We the undersigned contractor, have given careful consideration to the change proposed and agree, if this proposal is approved, that we will provide all equipment, furnish the materials, except as may otherwise be noted above, and perform all services necessary for the work above specified, and will accept as full payment therefor the prices shown above.

NOTE: If you, the contractor, do not sign acceptance of this order, your attention is directed to the requirements of the specifications as to proceeding with the ordered work and filing a written protest within the time therein specified.

Contractor Acceptance by

Signature	(Print name and title)	Date
	DANIEL E. HIMUCK, PRESIDENT	4/30/09

CONTRACT NO. 04-0120R4

The special provisions contained herein have been prepared by or under the direction of the following Registered Persons.

STRUCTURES

Steve Margaris

REGISTERED CIVIL ENGINEER

CONTRACT NO. 04-0120R4

CONTRACT CHANGE ORDER NO 94

SHEET 2 OF 21

Advance Construction of YBI - Temporary EB On-Ramp Abutment Structure
(CCO # 101)
8-8-07

TABLE OF CONTENTS

8-2.__ PORTLAND CEMENT CONCRETE 1

10-1.__ EARTHWORK 3
MEASUREMENT AND PAYMENT 3

10-1.__ PILING 3
GENERAL 3
STEEL PIPE PILING 5
NONDESTRUCTIVE TESTING FOR STEEL PIPE PILING 8
MEASUREMENT AND PAYMENT (PILING) 10

10-1.__ CONCRETE STRUCTURES 10
DECK CRACK TREATMENT 10
CONCRETE 10
CONCRETE 10
AGGREGATE GRADINGS 10
MEASUREMENT AND PAYMENT 10

10-1.__ REINFORCEMENT 10
MEASUREMENT AND PAYMENT 10

10-1.__ TIMBER LAGGING 10

10-1.__ MISCELLANEOUS METAL (BRIDGE) 12

CONTRACT NO. 04-012084

CONTRACT CHANGE ORDER NO 94

SHEET 3 OF 21

8-2.__ PORTLAND CEMENT CONCRETE

Portland cement concrete shall conform to the provisions in Section 90, "Portland Cement Concrete," of the Standard Specifications and these special provisions.

Cementitious material to be used in portland cement concrete shall conform to the provisions for cement and mineral admixtures in Section 90-2, "Materials," of the Standard Specifications, and shall be a combination of "Type II Modified" Portland cement and mineral admixture.

The Department maintains a list of sources of fine and coarse aggregate that have been approved for use with a reduced amount of supplementary cementitious material in the total amount of cementitious material to be used. A source of aggregate will be considered for addition to the approved list if the producer of the aggregate submits to the Transportation Laboratory certified test results from a qualified testing laboratory that verify the aggregate complies with the requirements. Before the testing starts, the aggregate test shall be registered with the Department. A registration number can be obtained by calling (916) 227-7228. The registration number shall be used as the identification for the aggregate sample in correspondence with the Department. Upon request, a split of the tested sample shall be provided to the Department. Approval of aggregate will depend upon compliance with the specifications, based on the certified test results submitted, together with any replicate testing the Department may elect to perform. Approval will expire 3 years from the date the most recent registered and evaluated sample was collected from the aggregate source.

Qualified testing laboratories shall conform to the following requirements:

1. Laboratories performing ASTM Designation: C 1293 shall participate in the Cement and Concrete Reference Laboratory (CCRL) Concrete Proficiency Sample Program and shall have received a score of 3 or better on each test of the previous 2 sets of concrete samples.
2. Laboratories performing ASTM Designation: C 1260 shall participate in the Cement and Concrete Reference Laboratory (CCRL) Pozzolan Proficiency Sample Program and shall have received a score of 3 or better on the shrinkage and soundness tests of the previous 2 sets of pozzolan samples.

Aggregates on the list shall conform to one of the following requirements:

1. When the aggregate is tested in conformance with the requirements in California Test 554 and ASTM Designation: C 1293, the average expansion at one year shall be less than or equal to 0.040 percent; or
2. When the aggregate is tested in conformance with the requirements in California Test 554 and ASTM Designation: C 1260, the average of the expansion at 16 days shall be less than or equal to 0.15 percent.

If the aggregates used in the concrete are on the Department's list, the minimum amount of supplementary cementitious material shall conform to the following:

1. If fly ash or natural pozzolan conforming to the provisions in Section 90-2.01C, "Required Use of Supplementary Cementitious Materials," of the Standard Specifications is used, the minimum amount of supplementary cementitious material shall be 15 percent by mass of the total cementitious material; or
2. If silica fume conforming to the provisions in Section 90-2.01C, "Required Use of Supplementary Cementitious Materials," of the Standard Specifications is used, the

minimum amount of supplementary cementitious material shall be 7 percent by mass of the total cementitious material.

The limitation on tricalcium silicate (C_3S) content in Type II cement specified in Section 90-2.01A, "Cement," of the Standard Specifications shall not apply.

CONTRACT NO. 04-0120R4

CONTRACT CHANGE ORDER NO 94

SHEET 5 OF 21

10-1.__ EARTHWORK

Earthwork shall conform to the provisions in Section 19, "Earthwork," of the Standard Specifications and these special provisions.

Surplus excavated material shall become the property of the Contractor and shall be disposed of in conformance with the provisions in Section 7-1.13, "Disposal of Material Outside the Highway Right of Way," of the Standard Specifications.

Reinforcement or metal attached to reinforced concrete rubble placed in embankments shall not protrude above the grading plane. Prior to placement within 0.6-m below the grading plane of embankments, reinforcement or metal shall be trimmed to no greater than 20 mm from the face of reinforced concrete rubble. Full compensation for trimming reinforcement or metal shall be considered as included in the contract prices paid per cubic meter for the types of excavation shown in the Engineer's estimate, or the contract prices paid for furnishing and placing imported borrow or embankment material, as the case may be, and no additional compensation will be allowed therefor.

MEASUREMENT AND PAYMENT

If structure excavation or structure backfill for bridges is not otherwise designated by type and payment for the structure excavation or structure backfill has not otherwise been provided for in the Standard Specifications or these special provisions, the structure excavation or structure backfill will be measured and paid for as structure excavation (bridge) or structure backfill (bridge), respectively.

10-1.__ PILING

GENERAL

Piling shall conform to the provisions in Section 49, "Piling," of the Standard Specifications, and these special provisions.

Unless otherwise specified, welding of any work performed in conformance with the provisions in Section 49, "Piling," of the Standard Specifications, shall be in conformance with the requirements in AWS D1.1.

Foundation recommendations are included in the "Information Handout" available to the Contractor as provided for in Section 2-1.03, "Examination of Plans, Specifications, Contract, and Site of Work," of the Standard Specifications.

Attention is directed to "Welding" of these special provisions.

If at any time during pile driving the blow count exceeds three times the required blow count as determined from Section 49, "Piling," of the Standard Specifications, the Contractor shall discontinue driving and notify the Engineer. Driving shall not resume until so directed by the Engineer.

Difficult pile installation is anticipated due to the presence of caving soils, , , cobbles and boulders, rock cuttings, timber piles, subsurface concrete debris,and underground utilities, .

Jetting and Drilling

Jetting to obtain the specified penetration in conformance with the provisions in Section 49-1.05, "Driving Equipment," of the Standard Specifications shall not be used for driven type piles.

Drilling to obtain the specified penetration in conformance with the provisions in Section 49-1.05, "Driving Equipment," of the Standard Specifications shall not be used for driven type piles except where obstructions to pile penetration are encountered. Should such obstructions be encountered, the Contractor shall provide special driving tips or heavier pile sections, subexcavate below the bottom of footing, predrill or core holes not greater than the least dimension of the pile to the proper depth, spud the piles, or take other measures to prevent damage to the pile during driving.

Materials resulting from drilling holes shall be disposed of in conformance with the provisions in Section 19-2.06, "Surplus Material," of the Standard Specifications.

Full compensation for providing special tips, heavier sections, or for subexcavating, predrilling, coring, spudding or employing other measures to prevent damage to the piles shall be considered as included in the contract unit price paid for drive steel pile of the size shown on the plans, and no additional compensation will be allowed therefor.

CONTRACT NO. 04-0120R4

CONTRACT CHANGE ORDER NO 94

SHEET 7 OF 21

STEEL PIPE PILING

General

Steel pipe piling shall consist of unfilled steel pipe piling. Steel pipe piling shall conform to the provisions in Section 49-5, "Steel Piles," of the Standard Specifications and these special provisions.

The work shall also include welding pile anchor dowels to the steel pipe; furnishing and placing concrete plug; and filling the pipe with sand to the limits shown on plan.

Pile anchor dowels shall conform to the provisions in Section 52, "Reinforcement" of the Standard Specifications and these special provisions.

Wherever reference is made to the American Petroleum Institute (API) specification 5L in the Standard Specifications, on the project plans, or in these special provisions, the year of adoption shall be 2000. All requirements of that code shall apply unless specified otherwise in the Standard Specifications, on the plans, or in these special provisions.

Only longitudinal and spiral seam welds in steel pipe piles may be made by the electric resistance welding method. Those welds shall be welded in conformance with the requirements in API 5L and any amendments to API 5L in the Standard Specifications or these special provisions.

Steel Pipe piling shall either conform to the requirements in API 5L or AWS D1.1, and the provisions specified in Section 49-5, "Steel Piles," of the Standard Specifications and these special provisions.

Handling devices may be attached to steel pipe piling. Welds attaching these devices shall be aligned parallel to the axis of the pile and shall conform to the requirements for field welding specified herein. Permanent bolted connections shall be corrosion resistant. Prior to making attachments, the Contractor shall submit a plan to the Engineer that includes the locations, handling and fitting device details, and connection details. Attachments shall not be made to the steel pipe piling until the plan is approved in writing by the Engineer. The Contractor shall allow the Engineer 7 days for the review of the plan. In the event the Engineer fails to complete the review within the time allowed, and if, in the opinion of the Engineer, completion of the work is delayed or interfered with by reason of the Engineer's delay in completing the review, the Contractor will be compensated for any resulting loss, and an extension of time will be granted, in the same manner as provided for in Section 8-1.09, "Right of Way Delays," of the Standard Specifications.

For steel pipe piling, including bar reinforcement in the piling, the Contractor shall allow the Engineer48 hours to review the Welding Report, specified in "Welding Quality Control" of these special provisions, and respond in writing after the required items have been received. No field welded steel pipe piling shall be installed, and no reinforcement in the piling shall be encased in concrete until the Engineer has approved the above requirements in writing. In the event the Engineer fails to complete the review and provide within the time allowed, and if, in the opinion of the Engineer, completion of the work is delayed or interfered with by reason of the Engineer's delay in completing the review, the Contractor will be compensated for any resulting loss, and an extension of time will be granted, in the same manner as provided for in Section 8-1.09, "Right of Way Delays," of the Standard Specifications.

Steel Pipe in Conformance with API 5L

Steel pipe piling conforming to the requirements in API 5L shall conform to the following additional requirements:

A. Each length of steel pipe piling shall be marked with the API monogram.
B. The product shall be capable of meeting the fit-up requirements of AWS D1.1, Section 5.22.3.1, "Girth Weld Alignment (Tubular)," when the project requires the material to be spliced utilizing a girth weld.
C. Welds made at a permanent facility shall be made by submerged arc welding or an electric resistance welding process.
D. Except for tack welding, the gas metal arc welding process (GMAW) shall not be used for welding of pipe pile material. When GMAW is used for tacking, the electrode shall not be deposited by short circuiting transfer.
E. The joining of pipe sections in a permanent facility utilizing a circumferential or jointer weld shall conform to the requirements in AWS D1.1.

Steel Pipe in Conformance with AWS D1.1

Steel pipe piling conforming to the requirements in AWS D1.1 shall conform to the following additional requirements:

A. Weld filler metal shall conform to the requirements in AWS D1.5 for the welding of ASTM Designation: A709/A709M, Grade 345 steel, except that the qualification, pretest, and verification test requirements need not be conducted if certified test reports are provided for the consumables to be used.
B. Except for tack welding, GMAW shall not be used for welding of pipe pile material. When GMAW is used for tacking, the electrode shall not be deposited by short circuiting transfer.
C. Pipe piling designated as ASTM Designation A252, which has a yield strength of less than or equal to 450 MPa, shall be treated as ASTM Designation A572/A572M, Grade 345 material for the purpose of welding and pre-qualification of base metal, in conformance with the requirements in AWS D1.1.
D. Each length of steel pipe piling shall be marked in conformance with the requirements in ASTM Designation: A252.
E. The outside circumference of the steel pipe piling end shall not vary by more than 10 mm from that corresponding to the diameter shown on the plans.

Field Welding

Field welding of steel piling is defined as welding performed after the certificate of compliance has been furnished by the manufacturer or fabricator and shall conform to the following requirements:

A. Match marking of pipe ends at the manufacturing or fabrication facility is recommended for piling to ensure weld joint fit-up. Prior to positioning any 2 sections of steel pipe to be spliced by field welding, including those that have been match marked at the manufacturing or fabrication facility, the Contractor shall equalize the offsets of the pipe ends to be joined and match mark the pipe ends.

CONTRACT NO. 04-012024 CONTRACT CHANGE ORDER NO 94 SHEET 9 OF 21

CONTRACT NO. 57-0124
CONTRACT CHANGE ORDER NO 94
SHEET 10 OF 21

B. Welds made in the flat position or vertical position (where the longitudinal pipe axis is horizontal) shall be single-vee or double-vee groove welds. Welds made in the horizontal position (where the longitudinal pipe axis is vertical) shall be single-bevel groove welds. Joint fit-ups shall conform to the requirements in AWS D1.1, Section 5.22.3.1, "Girth Weld Alignment (Tubular)," and these special provisions.

C. The minimum thickness of the backing ring shall be 6 mm, and the ring shall be continuous. Splices in the backing ring shall be made by complete penetration welds. These welds shall be completed, including visual inspection and any required nondestructive testing (NDT), prior to final insertion into a pipe end. The attachment of backing rings to pipe ends shall be done using the minimum size and spacing of tack welds that will securely hold the backing ring in place. Tack welding shall be done in the root area of the weld splice. Cracked tack welds shall be removed and replaced prior to subsequent weld passes. The gap between the backing ring and the steel pipe piling wall shall be no greater than 2 mm. One localized portion of the backing ring fit-up, that is equal to or less than a length that is 20 percent of the outside circumference of the pipe, as determined by the Engineer, may be offset by a gap equal to or less than 6 mm provided that this localized portion is first seal welded using shielded metal arc E7016 or E7018 electrodes. The Contractor shall mark this localized portion so that it can be referenced during any required NDT. Backing rings shall have a minimum width of 1 1/2 times the thickness of the pile to be welded or 65 mm, whichever is greater, so that the backing ring will not interfere with the interpretation of the NDT.

D. For steel pipe with an outside diameter greater than 1.1 m, and with a wall thickness greater than 25.4 mm, the root opening tolerances may be increased to a maximum of 5 mm over the specified tolerances.

E. Weld filler metal shall conform to the requirements shown in AWS D1.5 for the welding of ASTM Designation: A709/A709M, Grade 345 steel, except that the qualification, pretest, and verification test requirements need not be conducted if certified test reports are provided for the consumables to be used.

F. For field welding limited to attaching backing rings and handling devices, the preheat and interpass temperature shall be in conformance with the requirements in AWS D1.1, Section 3.5, "Minimum Preheat and Interpass Temperature Requirements," and with Table 3.2, Category C.

G. The minimum preheat and interpass temperature for production splice welding and for making repairs shall be 66°C, regardless of the pipe pile wall thickness or steel grade. In the event welding is disrupted, preheating to 66°C must occur before welding is resumed.

H. Welds shall not be water quenched. Welds shall be allowed to cool unassisted to ambient temperature.

I. Pipe piling designated as ASTM Designation A252, which has a yield strength of less than or equal to 450 MPa, shall be treated as ASTM Designation A572/A572M, Grade 345 material for the purposes of welding and prequalification of base metal, in conformance with the requirements in AWS D1.1.

At the Contractor's option, a steel pipe pile may be re-tapped to prevent pile set-up provided the field welded splice remains at least one meter above the work platform until that splice is approved in writing by the Engineer.

NONDESTRUCTIVE TESTING FOR STEEL PIPE PILING

Steel pipe piling at temporary east bound on-ramp shall receive nondestructive testing (NDT) in conformance with these special provisions.

Nondestructive Testing of Welds made at a Permanent Facility

Nondestructive testing of welding performed in conformance with the requirements of API 5L shall conform to the following criteria:

A. The manufacturer shall provide to the Engineer a VHS videocassette recording of the actual product testing, when radiological testing is utilized, or the actual radiographic film when film radiography is utilized. This videocassette or film submittal shall be provided to the Engineer for review prior to shipment of the product from the manufacturing facility.
B. Ultrasonic testing of seam welds produced by the electric resistance welding process (ERW) shall comply with API 5L, SR17 utilizing a type V10 notch, N10 notch, or a 3.2 mm drilled hole.
C. The ultrasonic equipment shall utilize transducers oscillating at frequencies between 2 and 5 megahertz.
D. When the pipe ends of seam welds produced by the submerged arc welding process (SAW) are inspected by ultrasonic methods in accordance with API 5L Paragraph 9.7.4, the acceptance criteria shall be based on a type N5 notch or a 1.6 mm drilled hole.
E. When film radiography is utilized to inspect pipe ends or repairs, the transmitted film density shall be 2.0 to 4.0 in the area of interest (weld, base metal, and IQI).
F. Repaired defects shall be re-inspected utilizing the NDT method that originally detected the defect, except that film radiography may be utilized for inspection of repairs when the defect was originally detected utilizing real time imaging or radiological testing.

Nondestructive testing of welding performed in conformance with AWS D1.1 shall be in conformance with the following criteria:

A. Twenty-five percent of each longitudinal, circumferential, or spiral weld made at a permanent fabrication facility shall receive NDT. If repairs are required in a portion of the tested weld, the repaired portion shall receive NDT, and additional NDT shall be performed on untested portions of the weld. The additional NDT shall be made on both sides of the repair area for a length equal to 10 percent of the length of the pipe's outside circumference. After this additional 20 percent of NDT is performed, and if more repairs are required, the total cumulative repair lengths from all NDT shall be determined and documented. If the cumulative weld repair length is determined to be equal to or more than 10 percent of the length of the pipe outside circumference, then the entire weld shall receive NDT.
B. Circumferential or longitudinal welds shall receive NDT by either radiographic, real time imaging systems, or ultrasonic methods that are in conformance with the requirements in AWS D1.1.
C. The acceptance and repair criteria for ultrasonic testing (UT) shall conform to the requirements in AWS D1.1, Section 6, Table 6.3 for cyclically loaded nontubular

CONTRACT NO. 04-012084 CONTRACT CHANGE ORDER NO 94 SHEET 11 OF 21

connections. The acceptance and repair criteria for radiographic or real time image testing shall conform to the requirements of AWS D1.1 for tensile stress welds.

Nondestructive Testing of Field Welds

Nondestructive testing of field welds shall be in conformance with these special provisions.

Personnel performing ultrasonic testing (UT) for field welds will be required to verify their qualifications prior to performing nondestructive testing by both written and practical exams. Information regarding these exams is available at the Transportation Laboratory.

At the option of the Contractor, either ultrasonic testing (UT) or radiographic testing (RT) shall be used as the method of NDT for splices made by field welding steel pipe piling. This NDT shall be used for each field weld, including welds that are made onto a portion of the steel pipe piling that has been installed and any repair made to a splice weld. Testing shall be done at locations selected by the Engineer. The length of a splice weld, not including repairs, where NDT is to be performed, shall have a cumulative weld length that is equal to 25 percent of the pipe outside circumference. The Engineer may select several locations on a given splice for NDT. The cover pass shall be ground smooth at the locations to be tested. The acceptance and repair criteria for UT shall conform to the requirements in AWS D1.1, Section 6, Table 6.3 for cyclically loaded nontubular connections. The acceptance and repair criteria for radiographic or real time image testing shall conform to the requirements of AWS D1.1 for tensile stress welds. If repairs are required in a portion of the tested weld, the repaired portion shall receive NDT, and additional NDT shall be performed on untested portions of the weld. The additional NDT shall be made on both sides of the repair area for a length equal to 10 percent of the length of the pipe's outside circumference. After this additional 20 percent of NDT is performed, and if more repairs are required, the total cumulative repair lengths from all NDT shall be determined and documented. If the cumulative weld repair length is determined to be equal to or more than 10 percent of the length of the pipe outside circumference, then the entire weld shall receive NDT.

When backing rings are used, the backing ring complete joint penetration splice welds shall be inspected by RT or UT for material of thickness equal to or greater than 8 mm, or by RT for material of thickness less than 8 mm. The acceptance criteria for splice welds in backing rings shall be AWS D1.1, Section 6 and Figure 6.5 for RT, or Table 6.3 for UT.

CONTRACT NO. 04-0120R4

CONTRACT CHANGE ORDER NO 94

SHEET 12 OF 21

MEASUREMENT AND PAYMENT (PILING)

Measurement and payment for the various types and classes of piles shall conform to the provisions in Sections 49-6.01, "Measurement," and 49-6.02, "Payment," of the Standard Specifications and these special provisions.

Full compensation for conforming to the provisions in "Steel Pipe Piling" and "Nondestructive Testing" of these special provisions shall be considered as included in the contract prices paid for the various items of work involved, and no additional compensation will be allowed therefor.

Pile anchor dowels will be paid for by the kilogram as bar reinforcing steel (bridge).

Full compensation for welding pile anchor dowels to the steel pipe, furnishing and placing concrete plug, filling the pipe with sand and locating existing retaining wall footing as shown on the plans, shall be considered as included in the contract price paid per meter for furnish steel pipe piling (762 mm), and no additional compensation will be allowed therefor.

10-1.__ CONCRETE STRUCTURES

Portland cement concrete structures shall conform to the provisions in Section 51, "Concrete Structures," of the Standard Specifications and these special provisions.

Shotcrete shall not be used as an alternative construction method for reinforced concrete members unless otherwise specified.

MEASUREMENT AND PAYMENT

Measurement and payment for concrete in structures shall conform to the provisions in Section 51-1.22, "Measurement," and Section 51-1.23, "Payment," of the Standard Specifications and these special provisions.

10-1.__ REINFORCEMENT

Reinforcement shall conform to the provisions in Section 52, "Reinforcement," of the Standard Specifications and these special provisions.The Department's mechanical splices prequalified list can be found at the following internet site:

http://www.dot.ca.gov/hq/esc/approved_products_list/

The provisions of "Welding Quality Control" of these special provisions shall not apply to resistance butt welding.

MEASUREMENT AND PAYMENT

Measurement and payment for reinforcement in structures shall conform to the provisions in Section 52-1.10, "Measurement," and Section 52-1.11, "Payment," of the Standard Specifications and these special provisions.

10-1.__ TIMBER LAGGING

Timber lagging shall conform to the details shown on the plans and the provisions in Sections 57, "Timber Structures" of the Standard Specifications and these special provisions.

Miscellaneous metal shall conform to the details shown on the plans and the provisions in Section 75, "Miscellaneous Metal" of the Standard Specifications and these special provisions.

Timbers 100 mm thick or less shall be installed with a 10 mm gap between lagging members except where shown on the plans. Timbers greater than 100 mm thick shall be installed with a 13 mm gap between lagging members except where shown on the plans.

Full compensation for miscellaneous metal for fastening timber lagging to supporting structures shall be considered as included in the contract price paid per cubic meter for timber lagging and no additional compensation will be allowed therefor.

CONTRACT NO. 04-0120R4

CONTRACT CHANGE ORDER NO 94

SHEET 14 OF 21

10-1.__ MISCELLANEOUS METAL (BRIDGE)

Miscellaneous metal (bridge) shall conform to the provisions for miscellaneous bridge metal in Section 75, "Miscellaneous Metal," of the Standard Specifications and these special provisions.

Attention is directed to "Welding" of these special provisions.

Miscellaneous metal (bridge) shall consist of the miscellaneous bridge metal items listed in Section 75-1.03, "Miscellaneous Bridge Metal," of the Standard Specifications, and the following:

A. Lagging support angle
B. Wedge Anchors

CONTRACT NO. 04-0120R4

CONTRACT CHANGE ORDER NO 94

SHEET 15 OF 21

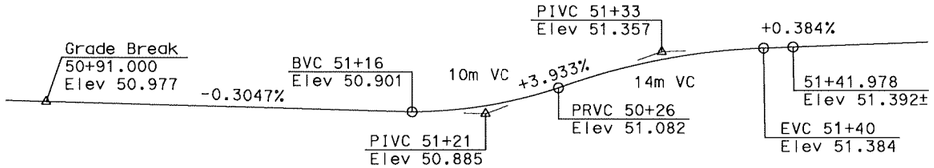

PROFILE GRADE

No Scale

PILE DATA						
LOCATION	DESIGN LOADING	NOMINAL RESISTANCE		DESIGN TIP ELEVATION (1) (2)		SPECIFIED TIP ELEVATION
		COMPRESSION	TENSION			
760 Ø CIDH Concrete						
Abut 1	1200 KN	2400 KN	0 KN	+32.0	+37.0	+32.0

Design tip elevation is controlled by the following demands:
(1) Compression, (2) Lateral

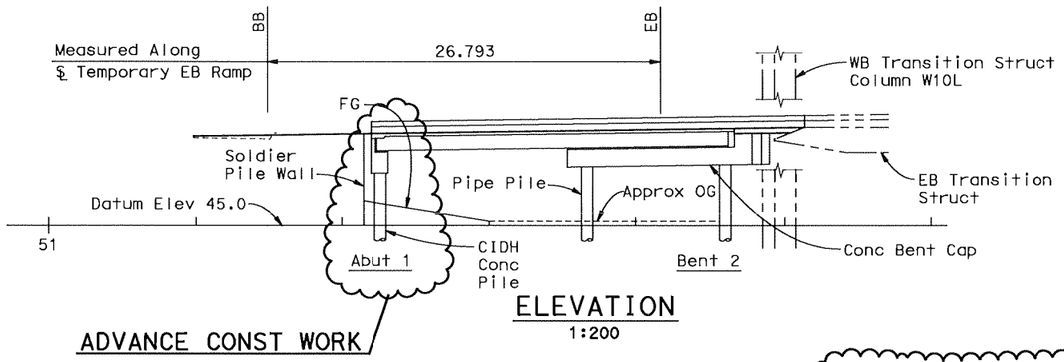

ELEVATION

1:200

ADVANCE CONST WORK

Note: Work shown in addition to that designated as "Advance Const Work" is for informational purposes only.

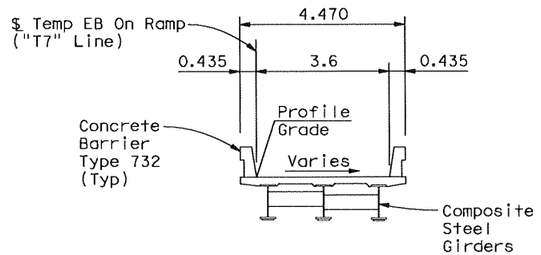

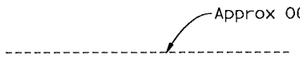

TYPICAL SECTION

1:80

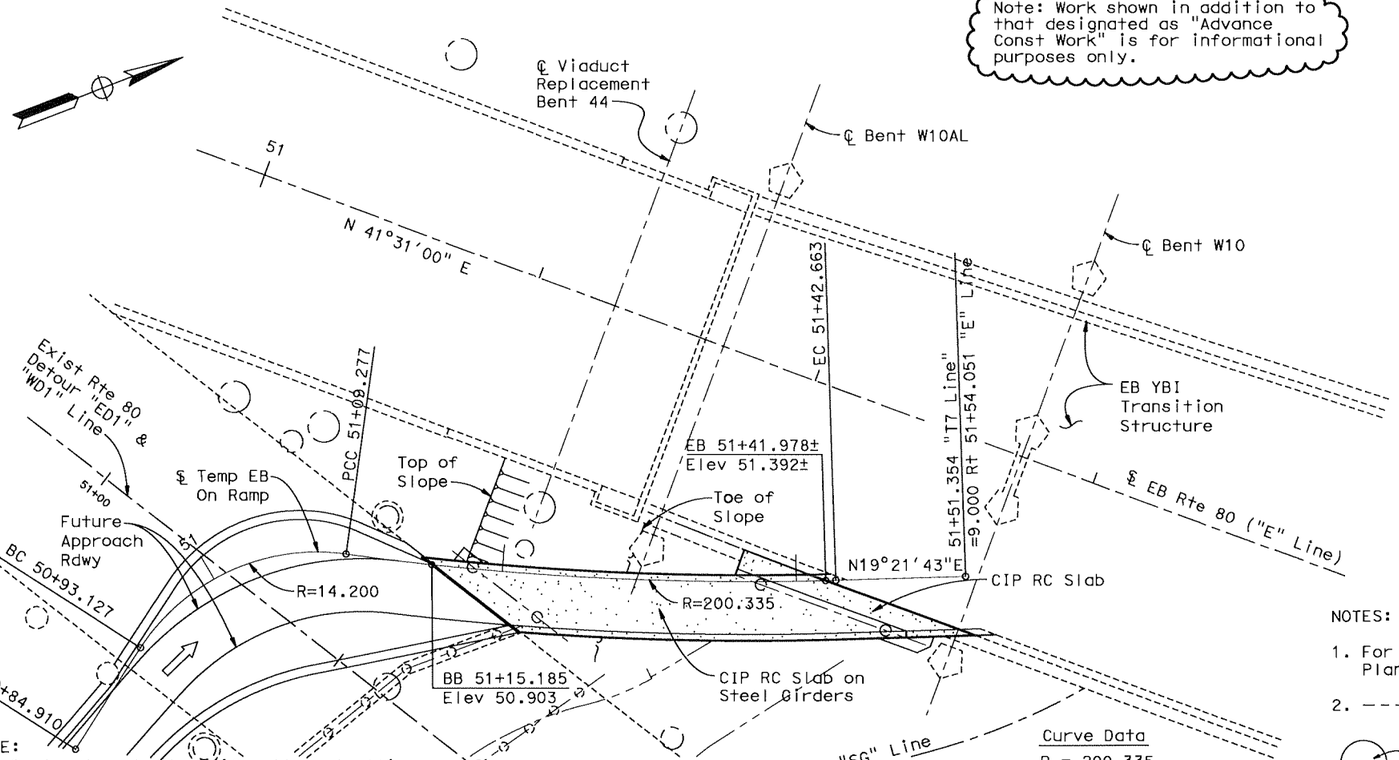

NOTE:
The Contractor shall verify all controlling field dimensions before ordering or fabricating any material or performing any work that might thereby be affected.

PLAN

1:200

Curve Data
R = 200.335
Δ = 9°32'54"
T = 16.732
L = 33.386

NOTES:

1. For General Notes, see "Foundation Plan" sheet.
2. ------ Indicates existing structure.

Standard Plan Sheet No.
Detail No.

ALL DIMENSIONS ARE IN METERS UNLESS OTHERWISE SHOWN

Note:

Abutment 1 is planned for 2 Stage Construction:

- Stage 1 (prior to placing traffic on SSD) to include construction of soldier pile wall and abutment CIDH concrete piles.
- Stage 2 (during demolition of existing bridge) to include excavation and construction of abutment cap.

INDEX TO BRIDGE PLANS

SHEET NO.	TITLE
1	GENERAL PLAN
2	FOUNDATION PLAN
2A	SOLDIER PILE WALL DETAILS
3	ABUTMENT DETAILS
4 & 5	LOG OF TEST BORINGS NO.1 & 2

APPLICABLE STANDARD PLANS (DATED JULY 1999)

A10A	ABBREVIATIONS
A10B	SYMBOLS
A62C	LIMITS OF PAYMENT FOR EXCAVATION AND BACKFILL - BRIDGE
B0-1	BRIDGE DETAILS
B0-5	BRIDGE DETAILS
B2-3	400MM CAST-IN-DRILLED-HOLE CONCRETE PILE

APPROXIMATE BRIDGE QUANTITIES

STRUCTURE EXCAVATION (BRIDGE)	17 M^3
STRUCTURE BACKFILL (BRIDGE)	3 M^3
FURNISH & INSTALL SOLDIER PILES (HP360 X 108)	38 M
610MM DRILLED HOLE (SOLDIER PILE)	23 M
FURNISH & INSTALL SOLDIER PILES (W610 X 175)	11 M
915MM DRILLED HOLE (SOLDIER PILE)	7 M
760MM CAST-IN-DRILLED-HOLE CONCRETE PILING	33 M
STRUCTURAL CONCRETE, BRIDGE	17 M^3
BAR REINFORCING (BRIDGE)	4,500 KG
STEEL PLATE LAGGING	2350 KG

SUPPLEMENTAL SHEET

CONTRACT CHANGE ORDER NO. 94
SHEET 16 OF 21

Caltrans Metric

DIST.	COUNTY	ROUTE	KILOMETER POST TOTAL PROJECT	SHEET NO.	TOTAL SHEETS
04	SF	80			

REGISTERED ENGINEER - CIVIL
A.L. ELY No. 18880 Exp. 6-30-09 CIVIL
REGISTERED PROFESSIONAL ENGINEER STATE OF CALIFORNIA
PLANS APPROVAL DATE

The State of California or its officers or agents shall not be responsible for the accuracy or completeness of electronic copies of this plan sheet.

T.Y.LIN / MOFFATT & NICHOL
TWO HARRISON STREET
SAN FRANCISCO, CA 94105

SAN FRANCISCO OAKLAND BAY BRIDGE
EAST SPAN SEISMIC SAFETY PROJECT

ADVANCE CONST PACKAGE NO. 3RO

TEMPORARY EB ON-RAMP STRUCTURE

GENERAL PLAN

DESIGN OVERSIGHT	DESIGN	BY Desai	CHECKED Lee	LOAD FACTOR DESIGN	LIVE LOADING: HS20-44 AND ALTERNATIVE AND PERMIT DESIGN LOAD		PREPARED FOR THE STATE OF CALIFORNIA DEPARTMENT OF TRANSPORTATION	Jal Birdy PROJECT ENGINEER	BRIDGE NO. 34-006 L/R
JUAN F. CARPIO	DETAILS	BY Samson	CHECKED Desai	LAYOUT	BY Desai	CHECKED Lee			KILOMETER POST 12.8
SIGN OFF DATE	QUANTITIES	BY Desai	CHECKED Lee	SPECIFICATIONS	BY Birdy	PLANS AND SPECS COMPARED Desai			

Rev. Date: 5-18-98

ORIGINAL SCALE IN MILLIMETERS FOR REDUCED PLANS 0 10 20 30 40 50 60 70 80 90 100

CU 04251
EA 0120S1

DISREGARD PRINTS BEARING EARLIER REVISION DATES

REVISION DATES (PRELIMINARY STAGE ONLY): 1/24/07 | 2/23/07 | 3/23/07 | 5/25/07 | 8/23/07 | 1/8/08 | 1/24/08 | 2/1/08 | 7/31/08 | 8/8/08

SHEET 1 OF 5

FILE => p:\4141-06\CADD\Temp EB On Ramp\Adv Const Pkg 3RO\Checked Plans\8-8-08\gp.dgn

Aug 8, 2008

USERNAME => fsamson DATE PLOTTED => 8/8/2008 TIME PLOTTED => 9:17:45 AM

NOTES:

1. For limits of payment for structure excavation and backfill, see A62C

2. For utility locations, see roadway plans.

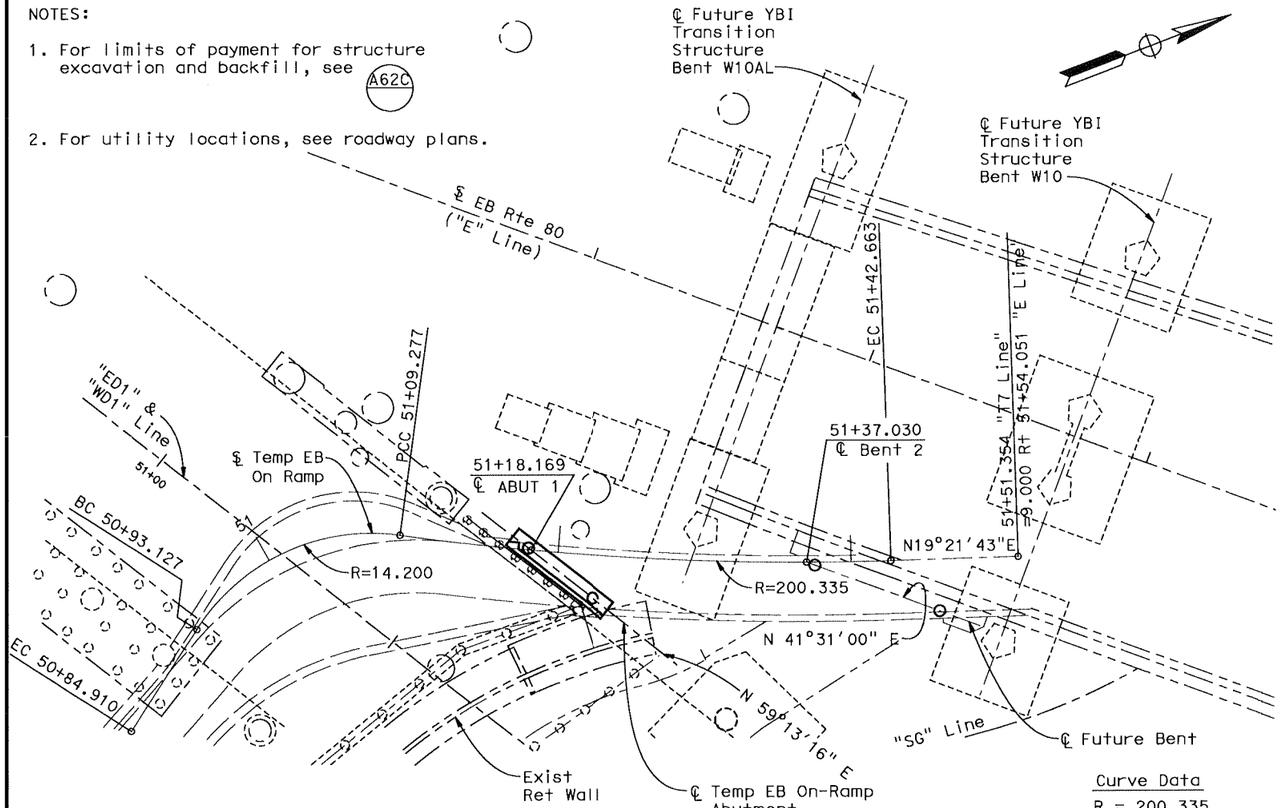

PLAN
1:200

Curve Data
R = 200.335
Δ = 9°32'54"
T = 16.732
L = 33.386

GENERAL NOTES

Load Factor Design

Design: Caltrans Design Specifications - April 2000 (LFD)
(1996 AASHTO with interims and revision by Caltrans)

Dead load: No allowance for future wearing surface

Live load: HS20-44. No allowance for alternative or permit loads

Seismic loading:
See Site Specific Response Spectra and refer to Fugro - EMI SFOBB Ground Motion Report dated 2001.

Reinforced concrete:
Fy = 420 MPa
F'c = 25 MPa
N = 8

NOTE:
The Contractor shall verify all controlling field dimensions before ordering or fabricating any material or performing any work that might thereby be affected.

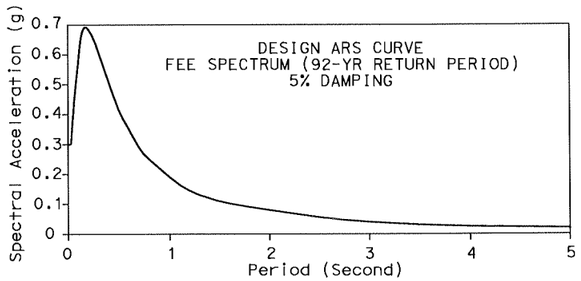

SITE SPECIFIC RESPONSE SPECTRA

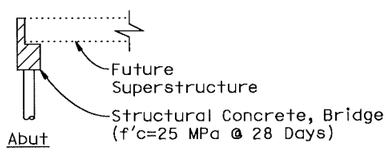

CONCRETE STRENGTH AND TYPE LIMITS
NO SCALE

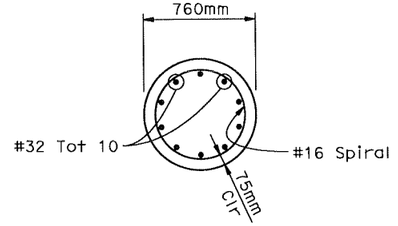

SECTION A-A
NO SCALE

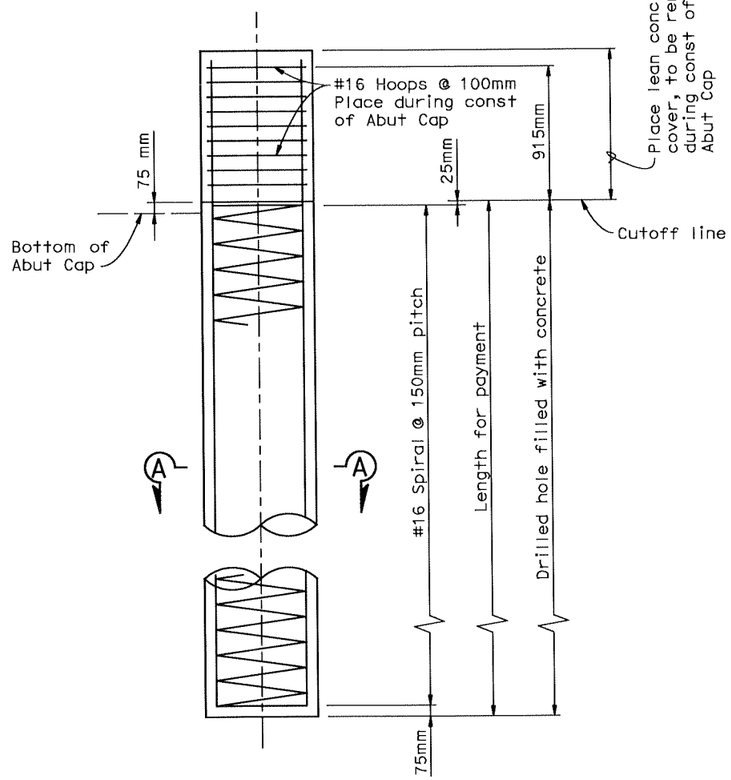

Note:
Hoops shall be continuous, hoop splices shall be ultimate butt splices, see Special Provisions.

760 DIA CIDH CONCRETE PILE
For details not shown, see B2-3
NO SCALE

ALL DIMENSIONS ARE IN METERS UNLESS OTHERWISE SHOWN

DIST.	COUNTY	ROUTE	KILOMETER POST TOTAL PROJECT	SHEET NO.	TOTAL SHEETS
04	SF	80			

REGISTERED ENGINEER - CIVIL
A.L. ELY No. 18880 Exp. 6-30-09 CIVIL
REGISTERED PROFESSIONAL ENGINEER STATE OF CALIFORNIA
PLANS APPROVAL DATE
The State of California or its officers or agents shall not be responsible for the accuracy or completeness of electronic copies of this plan sheet.

T.Y. LIN / MOFFATT & NICHOL
TWO HARRISON STREET
SAN FRANCISCO, CA 94105

SUPPLEMENTAL SHEET
CONTRACT CHANGE ORDER NO. 94
SHEET 17 OF 21

SAN FRANCISCO OAKLAND BAY BRIDGE
EAST SPAN SEISMIC SAFETY PROJECT

ADVANCE CONST PACKAGE NO. 3RO

TEMPORARY EB ON-RAMP STRUCTURE

FOUNDATION PLAN

DESIGN OVERSIGHT	SCALE:	VERT.DATUM	HORZ.DATUM
JUAN F. CARPIO	PHOTOGRAMMETRY AS OF:		ALIGNMENT TIES
SIGN OFF DATE	SURVEYED BY		DRAFTED BY
Rev. Date: 5-18-98	FIELD CHECKED BY		CHECKED BY

DESIGN	BY Desai	CHECKED Lee
DETAILS	BY Samson	CHECKED Desai
QUANTITIES	BY Desai	CHECKED Lee

PREPARED FOR THE STATE OF CALIFORNIA DEPARTMENT OF TRANSPORTATION

Jal Birdy
PROJECT ENGINEER

BRIDGE NO. 34-006 L/R
KILOMETER POST 12.8

CU 04251
EA 0120S1

ORIGINAL SCALE IN MILLIMETERS FOR REDUCED PLANS 0 10 20 30 40 50 60 70 80 90 100

DISREGARD PRINTS BEARING EARLIER REVISION DATES

REVISION DATES (PRELIMINARY STAGE ONLY): 1/24/07 6/25/07 7/27/07 8/15/07 1/4/08 1/21/08 1/31/08 8/8/08

SHEET 2 OF 5

FILE => p:\4141-06\CADD\Temp EB On Ramp\Adv Const Pkg 3RO\Checked Plans\8-8-08\foundation plan.dgn

GEOTECHNICAL PROFESSIONAL APPROVAL DATE

Aug 8, 2008

USERNAME => fsamson DATE PLOTTED => 8/8/2008 TIME PLOTTED => 9:17:58 AM

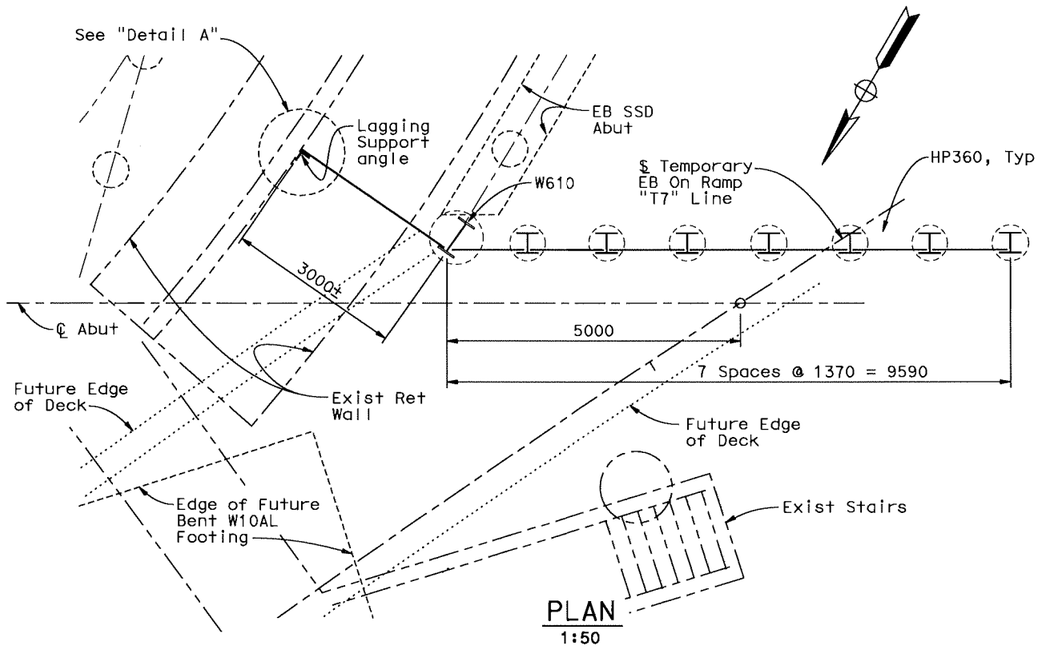

PLAN
1:50

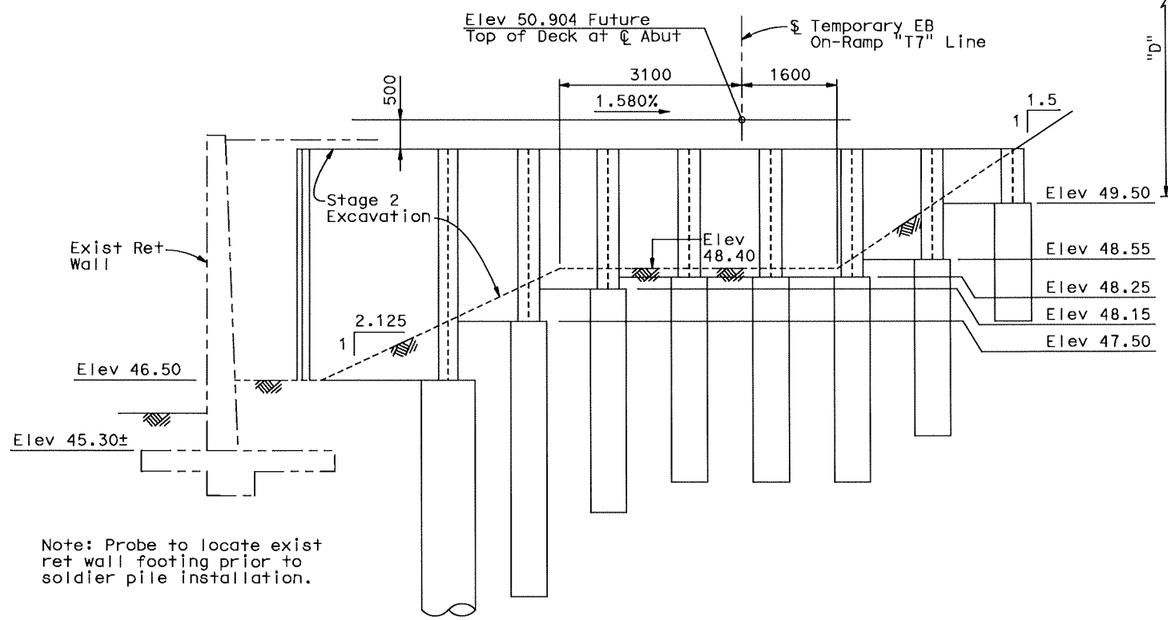

Note: Probe to locate exist ret wall footing prior to soldier pile installation.

ELEVATION
1:50

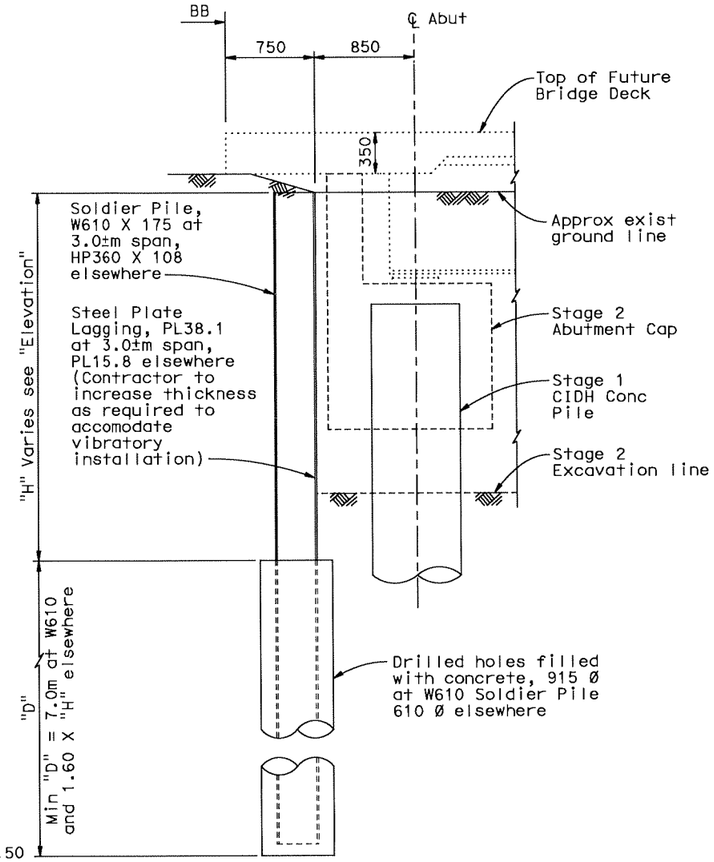

TYPICAL SECTION
1:25

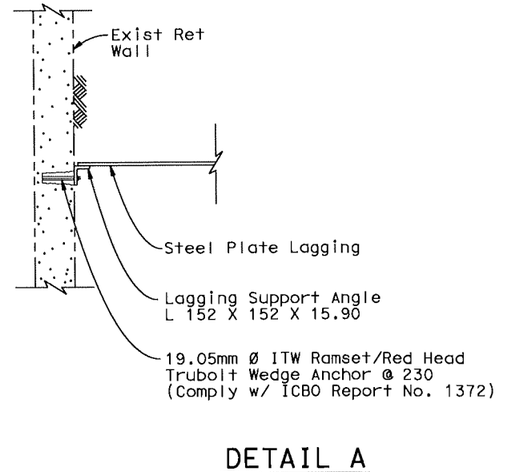

DETAIL A
1:25

NOTE:
The Contractor shall verify all controlling field dimensions before ordering or fabricating any material or performing any work that might thereby be affected.

ALL DIMENSIONS ARE IN MILLIMETERS UNLESS OTHERWISE SHOWN

DIST.	COUNTY	ROUTE	KILOMETER POST TOTAL PROJECT	SHEET NO.	TOTAL SHEETS
04	SF	80			

Caltrans Metric

A. L. Ely
REGISTERED ENGINEER - CIVIL
PLANS APPROVAL DATE
The State of California or its officers or agents shall not be responsible for the accuracy or completeness of electronic copies of this plan sheet.

REGISTERED PROFESSIONAL ENGINEER — A.L. ELY — No. 18880 — Exp. 6-30-09 — CIVIL — STATE OF CALIFORNIA

T.Y. LIN / MOFFATT & NICHOL
TWO HARRISON STREET
SAN FRANCISCO, CA 94105

SUPPLEMENTAL SHEET
CONTRACT CHANGE ORDER NO. 94
SHEET 18 OF 21

SAN FRANCISCO OAKLAND BAY BRIDGE
EAST SPAN SEISMIC SAFETY PROJECT
ADVANCE CONST PACKAGE NO. 3RO
TEMPORARY EB ON-RAMP STRUCTURE
SOLDIER PILE WALL DETAILS

DESIGN OVERSIGHT: Francisco Carpio, JUAN F. CARPIO, SIGN OFF DATE			
DESIGN	BY Desai	CHECKED Lee	
DETAILS	BY Samson	CHECKED Desai	
QUANTITIES	BY Desai	CHECKED Lee	

PREPARED FOR THE STATE OF CALIFORNIA
DEPARTMENT OF TRANSPORTATION

Jal Birdy
PROJECT ENGINEER

BRIDGE NO. 34-006 L/R
KILOMETER POST 12.8

CU 04251
EA 0120S1

DISREGARD PRINTS BEARING EARLIER REVISION DATES →
REVISION DATES (PRELIMINARY STAGE ONLY): 1/24/07 | 5/25/07 | 7/27/07 | 9/28/07 | 1/24/08 | 3/27/08 | 5/27/08 | 7/24/08 | 8/8/08

SHEET 2A OF 5

ORIGINAL SCALE IN MILLIMETERS FOR REDUCED PLANS 0 10 20 30 40 50 60 70 80 90 100

Rev. Date: 5-18-98

FILE => p:\4141-06\CADD\Temp EB On Ramp\Adv Const Pkg 3RO\Checked Plans\8-8-08\soldier pile wall det.dgn

Aug 8, 2008

TIME PLOTTED => 9:17:30 AM
DATE PLOTTED => 8/8/2008
USERNAME => fsamson

DIST.	COUNTY	ROUTE	KILOMETER POST TOTAL PROJECT	SHEET NO.	TOTAL SHEETS
04	SF	80			

Caltrans Metric

REGISTERED ENGINEER - CIVIL

PLANS APPROVAL DATE

The State of California or its officers or agents shall not be responsible for the accuracy or completeness of electronic copies of this plan sheet.

REGISTERED PROFESSIONAL ENGINEER A.L. ELY No. 18880 Exp. 6-30-09 CIVIL STATE OF CALIFORNIA

T.Y. LIN / MOFFATT & NICHOL
TWO HARRISON STREET
SAN FRANCISCO, CA 94105

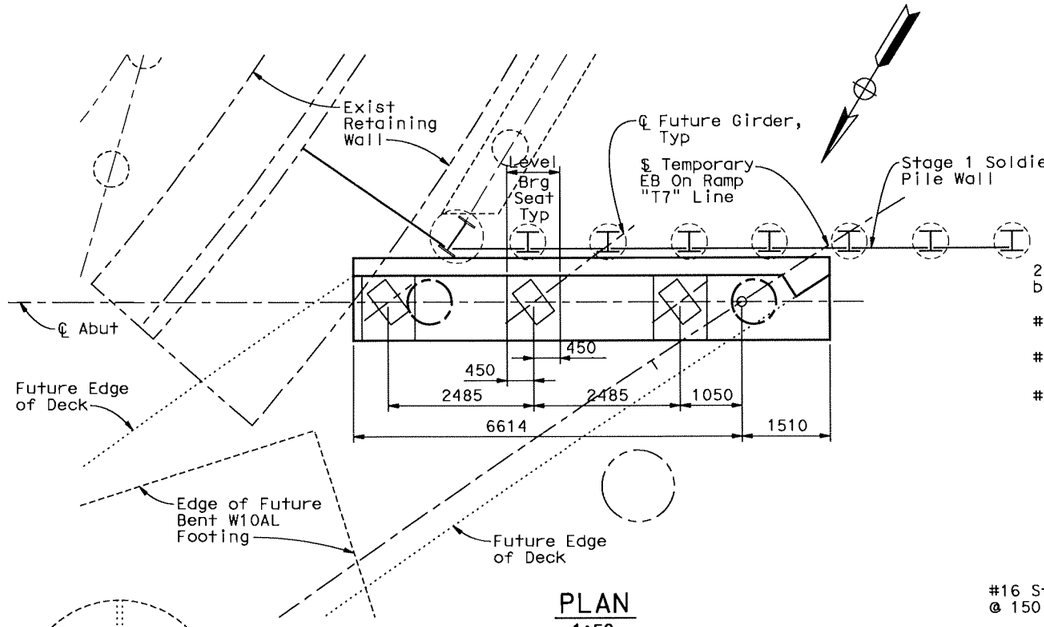

PLAN
1:50

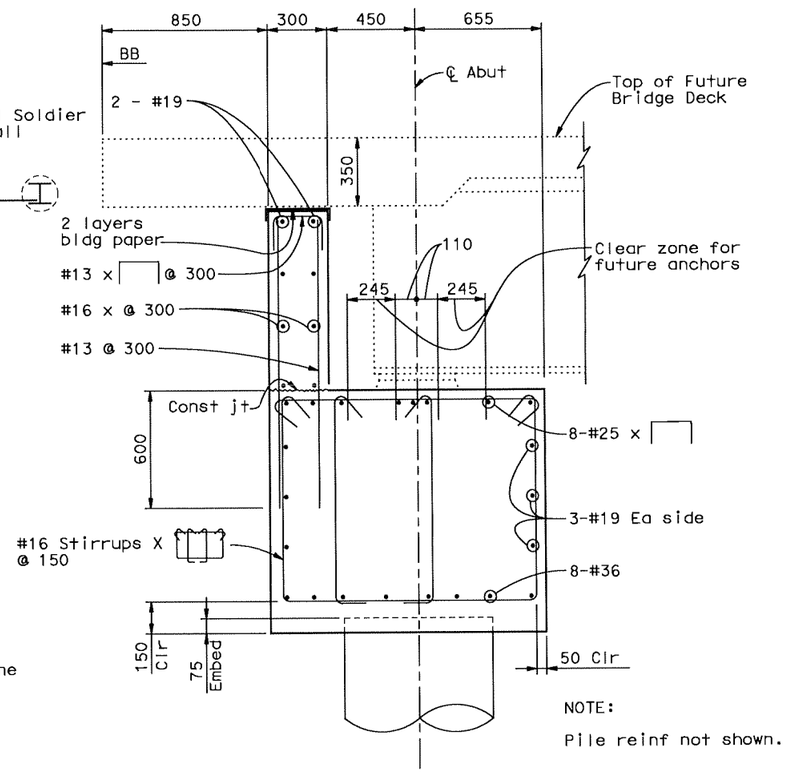

NOTE:
Pile reinf not shown.

TYPICAL ABUTMENT SECTION
1:15

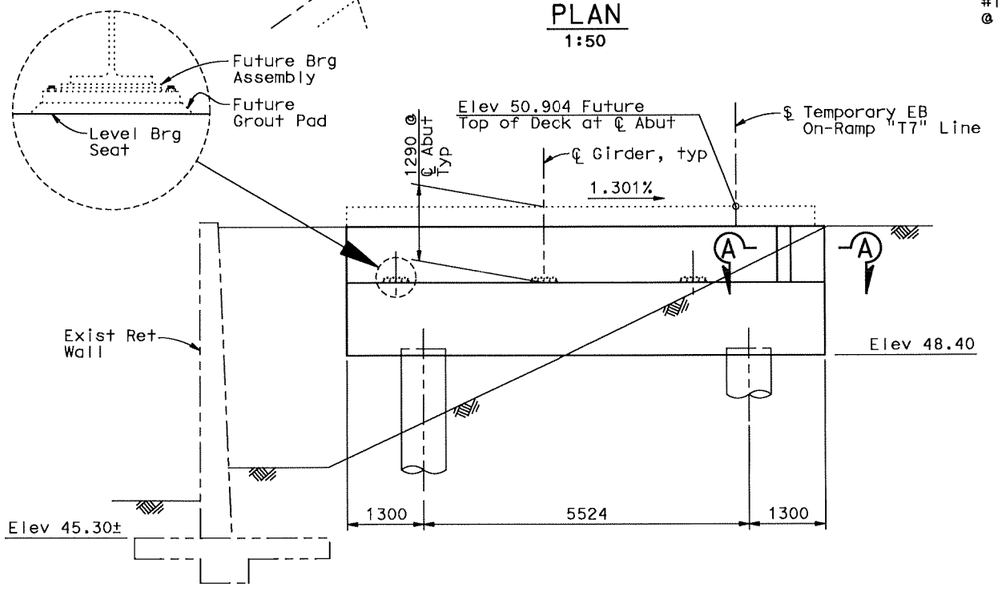

Note: Probe to locate exist ret wall footing prior to pile installation.

ELEVATION
1:50

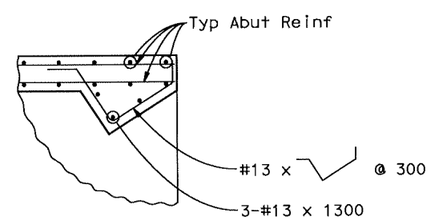

SECTION A-A
1:25

NOTE:
The Contractor shall verify all controlling field dimensions before ordering or fabricating any material or performing any work that might thereby be affected.

ALL DIMENSIONS ARE IN MILLIMETERS UNLESS OTHERWISE SHOWN

SUPPLEMENTAL SHEET

CONTRACT CHANGE ORDER NO. 94
SHEET 19 OF 21

SAN FRANCISCO OAKLAND BAY BRIDGE
EAST SPAN SEISMIC SAFETY PROJECT

ADVANCE CONST PACKAGE NO. 3RO

TEMPORARY EB ON-RAMP STRUCTURE

ABUTMENT DETAILS

DESIGN OVERSIGHT	DESIGN	BY Desai	CHECKED Lee
JUAN F. CARPIO	DETAILS	BY Samson	CHECKED Desai
SIGN OFF DATE	QUANTITIES	BY Desai	CHECKED Lee

PREPARED FOR THE STATE OF CALIFORNIA DEPARTMENT OF TRANSPORTATION

Jal Birdy
PROJECT ENGINEER

BRIDGE NO. 34-006 L/R
KILOMETER POST 12.8

Rev. Date: 5-18-98

ORIGINAL SCALE IN MILLIMETERS FOR REDUCED PLANS 0 10 20 30 40 50 60 70 80 90 100

CU 04251
EA 0120S1

DISREGARD PRINTS BEARING EARLIER REVISION DATES

REVISION DATES (PRELIMINARY STAGE ONLY) 1/24/07 6/25/07 7/13/07 8/15/07 7/8/08 7/17/08 7/21/08 7/31/08 8/8/08

SHEET 3 OF 5

FILE => p:\4141-06\CADD\Temp EB On Ramp\Adv Const Pkg 3RO\Checked Plans\8-8-08\abt det.dgn

Aug 8, 2008

USERNAME => fsamson DATE PLOTTED => 8/8/2008 TIME PLOTTED => 9:18:09 AM

DIST	COUNTY	ROUTE	KILOMETER POST TOTAL PROJECT	SHEET No	TOTAL SHEETS
04	SF	80			

[signature] 07/12/07
GEOTECHNICAL PROFESSIONAL

REGISTERED PROFESSIONAL ENGINEER MIKE KAPUSKAR NO. GE 2564 EXP. 12-31-08 GEOTECHNICAL STATE OF CALIFORNIA

PLANS APPROVAL DATE

The State of California or its officers or agents shall not be responsible for the accuracy or completeness of electronic copies of this plan sheet.

FUGRO-EARTH MECHANICS, J.V.
7750 Pardee Lane, Suite 120
Oakland, CA 94621

Caltrans Metric

CONTRACT NO. 04-0120R4

CONTRACT CHANGE ORDER NO 94

SHEET 20 OF 21

LEGEND OF BORING OPERATIONS

IN-SITU, LAB & FIELD TEST DESIGNATIONS

Symbol	Designation
AL	Atterberg Limits
CA	Corrosivity
CN	Consolidation
MD	Maximum Density
DS	Direct Shear
R	R-Value
PP	Pocket Penetrometer
SA	Grain Size
SE	Sand Equivalent
UC	Unconfined Compression
UU	Unconsolidated Undrained Triaxial
W	Wash Analysis

TYPE OF BORINGS

- 57 MM CONE PENETRATION
- ROTARY WASH
- ELECTRONIC CONE PENETROMETER
- AUGER BORING(DRY)
- TEST PIT
- DIAMOND CORE BORING
- SOIL TUBE

LEGEND FOR EARTH MATERIALS (USCS) BASED ON ASTM D2487, D2488

- FILL MATERIAL
- CLAY (CL or CH)
- SILT (ML or MH)
- PEAT and/or ORGANIC MATTER
- WELL-GRADED GRAVEL (GW)
- POORLY GRADED GRAVEL (GP)
- SILTY GRAVEL (GM)
- CLAYEY GRAVEL (GC)
- POORLY-GRADED SAND (SP)
- WELL GRADED SAND (SW)
- SILTY SAND (SM) or SANDY SILT
- COBBLES AND BOULDERS
- CLAYEY SAND (SC) or SANDY CLAY
- IGNEOUS ROCK
- SEDIMENTARY ROCK
- METAMORPHIC ROCK

CONSISTENCY CLASSIFICATION FOR SOILS

According to the Standard Penetration Test (ASTM D-1586)

SPT N-Value (Blows/305mm)	Granular	SPT N-Value (Blows/305mm)	Cohesive
0-4	Very Loose	<2	Very Soft
5-10	Loose	2-4	Soft
11-30	Medium Dense	5-8	Firm
31-50	Dense	9-15	Stiff
>50	Very Dense	16-30	Very Stiff
		>30	Hard

NOTE: Visual classification of earth materials are based on field inspection and are confirmed or revised with laboratory test results as necessary.

WEATHERING DESCRIPTORS

Modified from United States Bureau of Reclamation, Engineering Geology Field Manual.

Descriptors		Diagnostic features					General characteristics (strength, excavation, etc.) §
		Chemical weathering-Discoloration and/or oxidation		Mechanical weathering-Grain boundary conditions (disaggregation) primarily for granitics and some coarse-grained sediments	Texture and solutioning		
Alphanumeric descriptor	Descriptive term	Body of rock	Fracture surfaces†		Texture	Solutioning	
W1	Fresh	No discoloration, not oxidized.	No discoloration or oxidation.	No separation, intact (tight).	No change.	No solutioning.	Hammer rings when crystalline rocks are struck. Almost always rock excavation except for naturally weak or weakly cemented rocks such as siltstones or shales.
W2	Slightly weathered to fresh°						
W3	Slightly weathered	Discoloration or oxidation is limited to surface of, or short distance from, fractures; some feldspar crystals are dull.	Minor to complete discoloration or oxidation of most surfaces.	No visible separation, intact (tight).	Preserved.	Minor leaching of some soluble minerals may be noted.	Hammer rings when crystalline rocks are struck. Body of rock not weakened. With few exceptions, such as siltstones or shales, classified as rock excavation.
W4	Moderately to slightly weathered °						
W5	Moderately weathered	Discoloration or oxidation extends from fractures usually throughout; Fe-Mg minerals are "rusty," feldspar crystals are "cloudy."	All fracture surfaces are discolored or oxidized.	Partial separation of boundaries visible.	Generally preserved.	Soluble minerals may be mostly leached.	Hammer does not ring when rock is struck. Body of rock is slightly weakened. Depending on fracturing,usually is rock excavation except in naturally weak rocks such as siltstones or shales.
W6	Intensely to moderately weathered°						
W7	Intensely weathered	Discoloration or oxidation throughout; all feldspars and Fe-Mg minerals are altered to clay to some extent; or chemical alteration produces in-situ disaggregation, see grain boundary conditions.	All fracture surfaces are discolored or oxidized, surfaces friable.	Partial separation, rock is friable; in semiarid conditions granitics are disaggregated.	Texture altered by chemical disintegration (hydration, argillation).	Leaching of soluble minerals may be complete.	Dull sound when struck with hammer, usually can be broken with moderate to heavy manual pressure or by light hammer blow without reference to planes of weakness such as incipient or hairline fractures, or veinlets. Rock is significantly weakened. Usually common excavation.
W8	Very intensely weathered						
W9	Decomposed	Discolored or oxidized throughout, but resistant minerals such as quartz may be unaltered; all feldspars and Fe-Mg minerals are completely altered to clay.		Complete separation of grain boundaries (disaggregated).	Resembles a soil, partial or complete remnant rock structure may be preserved; leaching of soluble minerals usually complete.		Can be granulated by hand. Always common excavation. Resistant minerals such as quartz may be present as "stringers" or "dikes."

Note: This chart and its horizontal categories are more readily applied to rocks with feldspars and mafic minerals. Weathering in various sedimentary rocks, particularly limestones and poorly indurated sediments, will not always fit the categories established. This chart and weathering categories may have to be modified for particular site conditions or alteration such as hydrothermal effects; however, the basic framework and similar descriptors are to be used.

° Combination descriptors are permissible where equal distribution of both weathering characteristics are present over significant intervals or where characteristics present are "in between" the diagnostic feature. However, dual descriptors should not be used where significant, identifiable zones can be delineated. When given as a range only two adjacent terms may be combined. "Decomposed to slightly weathered," or "moderately weathered to fresh" are not acceptable.

† Does not include directional weathering along shears or faults and their associated features. For example, a shear zone that carried weathering to great depths into a fresh rock mass would not require the rock mass to be classified as weathered.

§ These are generalizations and should not be used as diagnostic features for weathering or excavation classification. These characteristics vary to a large extent based on naturally weak materials or cementation and type of excavation.

ROCK QUALITY DESIGNATION (RQD) & PERCENT RECOVERY (REC) LOGGING

RQD (ROCK QUALITY DESIGNATION)	DESCRIPTION OF ROCK QUALITY
0 - 25%	VERY POOR
25 - 50%	POOR
50 - 75%	FAIR
75 - 90%	GOOD
90 - 100%	EXCELLENT

REC = Percent Core Recovery

$$REC = \frac{\sum \text{Length of all core pieces}}{\text{Total core run length}}$$

$$RQD = \frac{\sum \text{Length of sound core pieces} \geq 100 \text{ mm}}{\text{Total core run length}}$$

$$RQD = \frac{250+190+200}{1200} \times 100\%$$

RQD = 53% (fair)

(No Scale)
After Deere & Deere, 1989

FRACTURE DENSITY

Modified from United States Bureau of Reclamation, Engineering Geology Field Manual.

FRACTURE DENSITY- Based on the spacing of all natural fractures in an exposure or core recovery lengths in boreholes; excludes mechanical breaks, shears, and shear zones; however, shear-disturbed zones (fracturing outside the shear) are included. Descriptors for fracture density apply to all rock exposures such as tunnel walls, dozer trenches, outcrops, or foundation cut slopes and inverts, as well as boreholes. Descriptive criteria presented below are based on borehole cores where lengths are measured along the core axis, for other exposures the criteria is distance measured between fractures (size of blocks).

UNFRACTURED (FD0): No fractures.

VERY SLIGHTLY FRACTURED (FD1): Core recovered mostly in lengths greater than 1 m.

SLIGHTLY TO VERY SLIGHTLY FRACTURED (FD2)*

SLIGHTLY FRACTURED (FD3): Core recovered mostly in lengths from 300 to 1000 mm, with few scattered lengths less than 300 mm or greater than 1000 mm.

MODERATELY TO SLIGHTLY FRACTURED (FD4)*

MODERATELY FRACTURED (FD5): Core recovered mostly in 100 to 300 mm lengths with most lengths about 200 mm.

INTENSELY TO MODERATELY FRACTURED (FD6)*

INTENSELY FRACTURED (FD7): Lengths average from 30 to 100 mm with scattered fragmented intervals. Core recovered mostly in lengths less than 100 mm.

VERY INTENSELY TO INTENSELY FRACTURED (FD8)*

VERY INTENSELY FRACTURED (FD9): Core recovered mostly as chips and fragments with a few scattered short core lengths.

* Combinations of fracture densities (e.g. very intensely to intensely fractured, or moderately to slightly fractured) are used where equal distribution of both fracture density characteristics are present over a significant interval or exposure, or where characteristics are "in between" the descriptor definitions.

ROCK HARDNESS DESCRIPTORS

Alphanumeric Descriptor	Descriptor	Criteria
H1	Extremely hard	Core, fragment, or exposure cannot be scratched with knife or sharp pick; can only be chipped with repeated heavy hammer blows.
H2	Very hard	Cannot be scratched with knife of sharp pick. Core or fragment breaks with repeated heavy hammer blows.
H3	Hard	Can be scratched with knife or sharp pick with difficulty (heavy pressure). Heavy hammer blow required to break specimen.
H4	Moderately hard	Can be scratched with knife or sharp pick with light or moderate pressure. Core or fragment breaks with moderate hammer blow.
H5	Moderately soft	Can be grooved 2 mm deep by knife or sharp pick with moderate or heavy pressure. Core or fragment breaks with light hammer blow or heavy manual pressure.
H6	Soft	Can be grooved or gouged easily by knife or sharp pick with light pressure, can be scratched with fingernail. Breaks with light to moderate manual pressure.
H7	Very soft	Can be readily indented, grooved or gouged with fingernail, or carved with a knife. Breaks with light manual pressure.

Any bedrock unit softer than H7, very soft, is to be described using ASTM D-2488 consistency descriptors.

Note: Although "sharp pick" is included in these definitions, descriptions of ability to be scratched, grooved or gouged by a knife is the preferred criteria.

Modified from United States Bureau of Reclamation, Engineering Geology Field Manual.

BEDDING, FOLIATION, OR FLOW TEXTURE DESCRIPTORS

Descriptors	Thickness / Spacing
Massive	Greater than 3 m
Very thickly (bedded, foliated, or banded)	1 to 3 m
Thickly	300 mm to 1 m
Moderately	100 to 300 mm
Thinly	30 to 100 mm
Very thinly	10 to 30 mm
Laminated (intensely foliated or banded)	Less than 10 mm

Modified from United States Bureau of Reclamation, Engineering Geology Field Manual.

DESIGN OVERSIGHT	DRAWN BY	J. CASTLE 11/28/06	NA FIELD INVESTIGATION BY:	PREPARED FOR THE STATE OF CALIFORNIA DEPARTMENT OF TRANSPORTATION	M. KAPUSKAR PROJECT ENGINEER	BRIDGE NO. 34-0006	TEMPORARY EB ON-RAMP STRUCTURE
SIGN OFF DATE	CHECKED BY	M. KAPUSKAR 11/28/06	DATE: NA		CU 04251 EA 0120S1	KILOMETER POST 12.8	LOG OF TEST BORINGS NO. 1

DISREGARD PRINTS BEARING EARLIER REVISION DATES → REVISION DATES (PRELIMINARY STAGE ONLY) SHEET 4 OF 5

ORIGINAL SCALE IN MILLIMETERS FOR REDUCED PLANS 0 10 20 30 40 50 60 70 80 90 100

GEOTECHNICAL LOG OF TEST BORINGS SHEET (METRIC) (REV 6/21/04)

FILE => $REQUEST

USERNAME => $USER DATE PLOTTED => $DATE TIME PLOTTED => $TIME

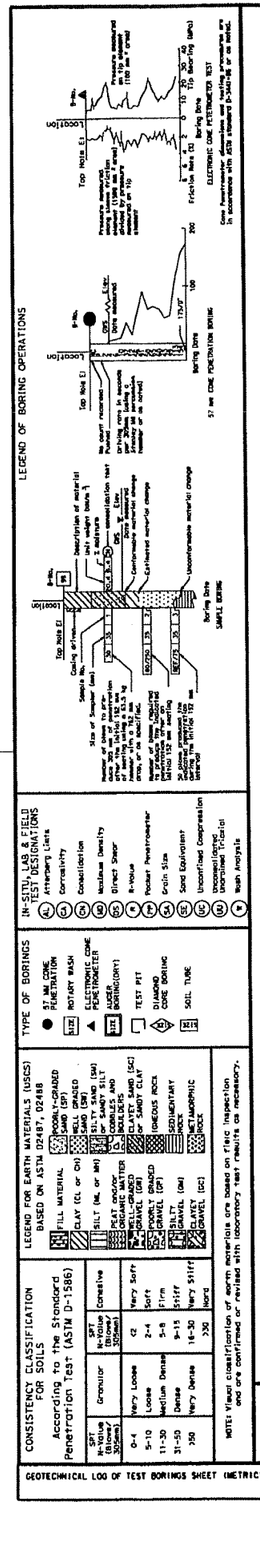

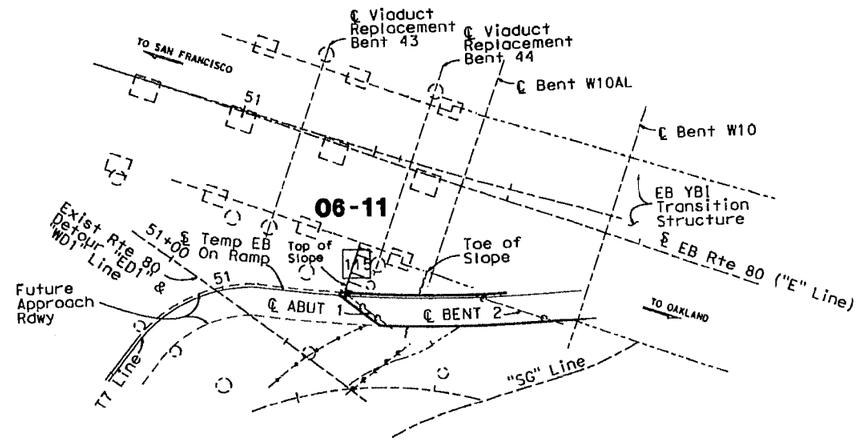

PLAN
1:400

CONTRACT NO. 04-0120R4

CONTRACT CHANGE ORDER NO 94

SHEET 21 OF 21

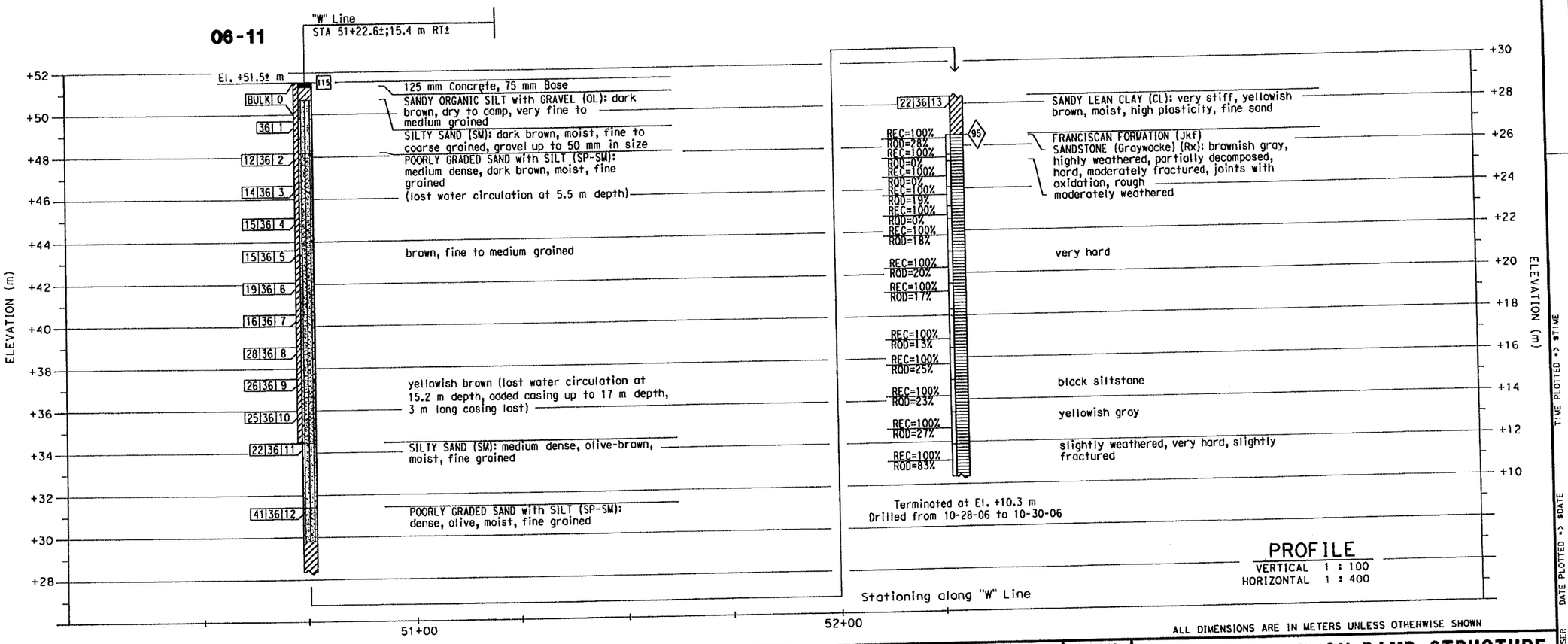

PROFILE
VERTICAL 1 : 100
HORIZONTAL 1 : 400

ALL DIMENSIONS ARE IN METERS UNLESS OTHERWISE SHOWN

DIST	COUNTY	ROUTE	KILOMETER POST TOTAL PROJECT	SHEET No	TOTAL SHEETS
04	SF	80			

GEOTECHNICAL PROFESSIONAL 07/12/07

REGISTERED PROFESSIONAL ENGINEER MIKE KAPUSKAR NO. GE 2564 EXP. 12-31-08 GEOTECHNICAL STATE OF CALIFORNIA

PLANS APPROVAL DATE

The State of California or its officers or agents shall not be responsible for the accuracy or completeness of electronic copies of this plan sheet.

FUGRO-EARTH MECHANICS, J.V.
7750 Pardee Lane, Suite 120
Oakland, CA 94621

DESIGN OVERSIGHT	DRAWN BY	M. THAN	11/15/06
SIGN OFF DATE	CHECKED BY	M. KAPUSKAR	11/28/06

M. THAN
FIELD INVESTIGATION BY:
DATE: AS NOTED

PREPARED FOR THE STATE OF CALIFORNIA DEPARTMENT OF TRANSPORTATION

M. KAPUSKAR
PROJECT ENGINEER

CU 04251
EA 0120S1

BRIDGE NO.	TEMPORARY EB ON-RAMP STRUCTURE
34-0006	
KILOMETER POST	LOG OF TEST BORINGS NO. 2
12.8	

DISREGARD PRINTS BEARING EARLIER REVISION DATES →

REVISION DATES (PRELIMINARY STAGE ONLY)										SHEET	OF
										5	5

ORIGINAL SCALE IN MILLIMETERS FOR REDUCED PLANS 0 10 20 30 40 50 60 70 80 90 100

GEOTECHNICAL LOG OF TEST BORINGS SHEET (METRIC) (REV 6/21/04)

FILE => $REQUEST

USERNAME => $USER DATE PLOTTED => $DATE TIME PLOTTED => $TIME

STATE OF CALIFORNIA - DEPARTMENT OF TRANSPORTATION

CONTRACT CHANGE ORDER MEMORANDUM

TO: MIKE FORNER / DEANNA VILCHECK	FILE: E.A. 04 - 0120R4
	CO-RTE-PM SF-80-12.6/13.2
FROM: BILL CASEY	FED. NO. ACBRIM-080-1(097)N
CCO#: 94 SUPPLEMENT#: 0 Category Code: CHTX	CONTINGENCY BALANCE (incl. this change) $72,143,541.05
COST: $153,593.00 INCREASE ☑ DECREASE ☐	HEADQUARTERS APPROVAL REQUIRED? ☐ YES ☑ NO
SUPPLEMENTAL FUNDS PROVIDED: $0.00	IS THIS REQUEST IN ACCORDANCE WITH ENVIRONMENTAL DOCUMENTS? ☑ YES ☐ NO
CCO DESCRIPTION: YBITS Temp EB Onramp Abutement	PROJECT DESCRIPTION: CONSTRUCT ROUTE 80 TEMP BYPASS STRUCTURE

Original Contract Time:	Time Adj. This Change:	Previously Approved CCO Time Adjustments:	Percentage Time Adjusted: (including this change)	Total # of Unreconciled Deferred Time CCO(s): (including this change)
475 Day(s)	0 Day(s)	1195 Day(s)	252 %	7

THIS CHANGE ORDER PROVIDES FOR:

The construction of seven soldier piles and two CIDH piles for the future Temporary Eastbound Onramp.

This contract provides for the construction of the temporary Yerba Buena Island Detour (YBID) for both eastbound and westbound I-80 traffic that allows for the tie in of the east span of the new San Francisco Oakland Bay Bridge (SFOBB) to the Yerba Buena Island Transition Structures (YBITS).

The Department issued a December 25, 2006 memo entitled 'Recommendation to Construct Select Yerba Buena Island Transition Structure Foundations by Contract Change Order' which was approved by both Tony Anziano (Toll Bridge Program Manager) and Richard Land (Chief Engineer). This strategey memo provided for the advance construction of foundation work for the Yerba Buena Island Transition Structure (YBITS) under this contract.

Part of the YBITS advance construction work includes installing temporary shoring and permanent piles for the temporary eastbound on ramp abutment that will be built as part of the YBITS 2 Contract (Contract No. 0120T1). This abutment will provide for a temporary eastbound on ramp once the YBITS 1 Contract (Contract No. 0120S1) is complete so that the YBITS 2 Contract can construct the permanent eastbound on ramp abutment. Due to constructability and staging issues with constructing the abutment in its entirety later, portions of this work are being constructed now in a coordinated effort with the WTI Phase 2 work. Caltrans Design has prepared plans ("Advanced Construciton Package No. 3RO") to complete portions of the construction ahead of time.

The work under this CCO includes constructing two cast-in-drilled hole (CIDH) concrete abutment piles, and constructing portions of a soldier pile and steel plate temporary shoring retaining wall. The portions of the soldier pile wall that will be installed now are drilling and setting soldier piles. Under a future CCO, the balance of the wall will be completed (including splicing the tops of the soldier piles to the portions that have been installed, then completing steel plate lagging).

For this work the Contractor will be compensated at the agreed lump sum of $153,593.00, which will be financed from the contract's contingency funds. A cost analysis is on file.

There will be no adjustment in contract time due to this change order.

Maintenance concurrence is not required as this involves only temporary items.

Mike Whiteside - YBI Coordination Engineer requested this change per Memorandum on August 23, 2007 with concurrences by Alec Melkonians - Asst. Project Manager and Hong Wong - Project Engineer.

...available in alternate formats. For information call (916) 654-6410 or TDD (916) 654-3880 or write

RECEIVED
010398 JUN -3 09

CONCURRED BY:			
Construction Engineer:	Bill Casey, Resident Engineer	Date	3/16/09
Bridge Engineer:	Mike Whiteside, Toll Bridge Design	Date	8/27/07
Project Engineer:	Alec Melkonians	Date	2/19/09
Project Manager:	Hong Wong, PE	Date	2/23/09
FHWA Rep.:		Date	
Environmental:		Date	
Other (specify):		Date	
Other (specify):		Date	
District Prior Approval By:		Date	
HQ (Issue Approve) By:		Date	
Resident Engineer's Signature:		Date	
[signature]			3-16-09

ESTIMATE OF COST

	THIS REQUEST	TOTAL TO DATE
ITEMS	$0.00	$0.00
FORCE ACCOUNT	$0.00	$0.00
AGREED PRICE	$0.00	$0.00
ADJUSTMENT	$153,593.00	$153,593.00
TOTAL	$153,593.00	$153,593.00

FEDERAL PARTICIPATION

☐ PARTICIPATING ☐ PARTICIPATING IN PART ☐ NONE
☐ NON-PARTICIPATING (MAINTENANCE) ☑ NON-PARTICIPATING

FEDERAL SEGREGATION (if more than one Funding Source or P.I.P. type)
☐ CCO FUNDED PER CONTRACT ☐ CCO FUNDED AS FOLLOWS

FEDERAL FUNDING SOURCE	PERCENT

ADA Notice: For individuals with sensory disabilities, this document is available in alternate formats. For information call: (916) 654-6410 or TDD (916) 654-3880 or write

STATE OF CALIFORNIA - DEPARTMENT OF TRANSPORTATION

CONTRACT CHANGE ORDER

Change Requested by: Engineer

CCO: 94	Suppl. No. 1	Contract No. 04 - 0120R4	Road SF-80-12.6/13.2	FED. AID LOC.:

To: CC MYERS INC

You are directed to make the following changes from the plans and specifications or do the following described work not included in the plans and specifications for this contract. ***NOTE: This change order is not effective until approved by the Engineer.***

Description of work to be done, estimate of quantities and prices to be paid. (Segregate between additional work at contract price, agreed price and force account.) Unless otherwise stated, rates for rental of equipment cover only such time as equipment is actually used and no allowance will be made for idle time. This last percentage shown is the net accumulated increase or decrease from the original quantity in the Engineer's Estimate.

Extra Work at Lump Sum:

Provide all additional labor, equipment, and material to complete the following items of work shown on CCO 94 specifications and plans (Sheets 2 through 21of CCO 94) that had previously been excluded from the contract scope:

1. Installation of steel plate lagging between soldier piles.
2. Installation of lagging support angle iron at existing wall and wedge anchors (per Detail A shown on Sheet 2A of 5).
3. Installation of top portion of H-Piles. This change order supplement includes field weld splicing these piles.

Completion of these items anticipates that the contractor will use all of the materials that had been previously furnished and stored at the site for future installation under CCO 94. Any further remaining of these materials will become the property of the contractor.

Price includes excavation and backfill as required to complete the above work items, and providing and placing cement slurry backfill to fill void areas behind shoring wall. Price includes providing and placing additional steel plate and H pile as required to field fit required shoring at existing concrete wall.

For this work, the Contractor shall be compensated an agreed lump sum of $35,308.00, which constitutes full compensation, including all markups, for all costs associated with this change.

Cost of Extra Work at Agreed Lump Sum $35,308.00

Estimated Cost: Increase ☑ Decrease ☐ **$35,308.00**

By reason of this order the time of completion will be adjusted as follows: 0 days

Submitted by:			
Signature Jeannie Balderrama	**Resident Engineer** JEANNIE BALDERRAMOS	**Date** 7-22-10
Approval Recommended by:			
Signature Deanna Vilcheck	**Area Construction Manager** DEANNA VILCHECK	**Date** 7/22/10
Engineer Approval by:			
Signature Deanna Vilcheck	**Area Construction Manager** DEANNA VILCHECK	**Date** 8/17/10

We the undersigned contractor, have given careful consideration to the change proposed and agree, if this proposal is approved, that we will provide all equipment, furnish the materials, except as may otherwise be noted above, and perform all services necessary for the work above specified, and will accept as full payment therefor the prices shown above.

NOTE: If you, the contractor, do not sign acceptance of this order, your attention is directed to the requirements of the specifications as to proceeding with the ordered work and filing a written protest within the time therein specified.

Contractor Acceptance by:		
Signature	**(Print name and title)** Steve Francis, Chief Estimator	**Date** 8.6.10

STATE OF CALIFORNIA - DEPARTMENT OF TRANSPORTATION

CONTRACT CHANGE ORDER

Change Requested by: Engineer

CCO 96	Suppl. No. 0	Contract No. 04 - 0120R4	Road SF-80-12.6/13.2	FED. AID LOC.: ACBRIM-080-1(097)N

To: **CC MYERS INC**

You are directed to make the following changes from the plans and specifications or do the following described work not included in the plans and specifications for this contract. ***NOTE: This change order is not effective until approved by the Engineer.***

Description of work to be done, estimate of quantities and prices to be paid. (Segregate between additional work at contract price, agreed price and force account.) Unless otherwise stated, rates for rental of equipment cover only such time as equipment is actually used and no allowance will be made for idle time. This last percentage shown is the net accumulated increase or decrease from the original quantity in the Engineer's Estimate.

Extra Work at Force Account:

As authorized by the Engineer, furnish necessary labor, equipment and materials to implement longer term SWPPP measures by placing shotcrete slope protection on portions of the south and east slopes adjacent to Bents 48 and 49 of the Temporary Bypass Structure, Bridge No. 34-0006 (TEMP), between Sta. 51+32 to 51+55 and Sta. 51+90 to 52+25, as shown on Sheets 2 through 4 of this change order.

Shotcrete work will be performed in accordance with Section 53 "Shotcrete" of the Standard Specifications.

All work shall be performed in accordance with the Standard Specifications, the Contract Special Provisions, and as directed by the Engineer.

Estimated Cost of Extra Work at Force Account $190,000.00

Estimated Cost: Increase ☑ Decrease ☐ **$190,000.00**

By reason of this order the time of completion will be adjusted as follows: 0 days

Submitted by		
Signature	**Resident Engineer** BILL CASEY	**Date** 12-5-07
Approval Recommended by		
Signature	**Area Construction Manager** DENNIS TURCHON	**Date** 12/6/07
Engineer Approval by		
Signature	**Area Construction Manager** DENNIS TURCHON	**Date** 1/4/08

We the undersigned contractor, have given careful consideration to the change proposed and agree, if this proposal is approved, that we will provide all equipment, furnish the materials, except as may otherwise be noted above, and perform all services necessary for the work above specified, and will accept as full payment therefor the prices shown above.

NOTE: If you, the contractor, do not sign acceptance of this order, your attention is directed to the requirements of the specifications as to proceeding with the ordered work and filing a written protest within the time therein specified.

Contractor Acceptance by		
Signature	**(Print name and title)** DANIEL E. HAMICK, PRESIDENT	**Date** 12/19/07

CONTRACT NO 04-0120R4
CONTRACT CHANGE ORDER NO 96
SHEET 2 OF 4
YB1
YB2
51
52
30
WM LINE
51+10
51+75
51+80
51+85
51+90
51+95
52+00
52+05
52+10
52+15
52+20
52+25
52+30
52+35
52+40
52+45
52+50
52+55
52+60
52+65
52+70
52+75
52+80
52+85
52+90
52+95
53+00
LIMITS OF SHOTCRETE
NOTE:
EXACT LIMITS OF SHOTCRETE
TO BE DETERMINED BY THE
ENGINEER.
REGISTERED PROFESSIONAL ENGINEER
ALEC MELKONIANS
C 053452
Exp. 6/30/09
CIVIL
STATE OF CALIFORNIA

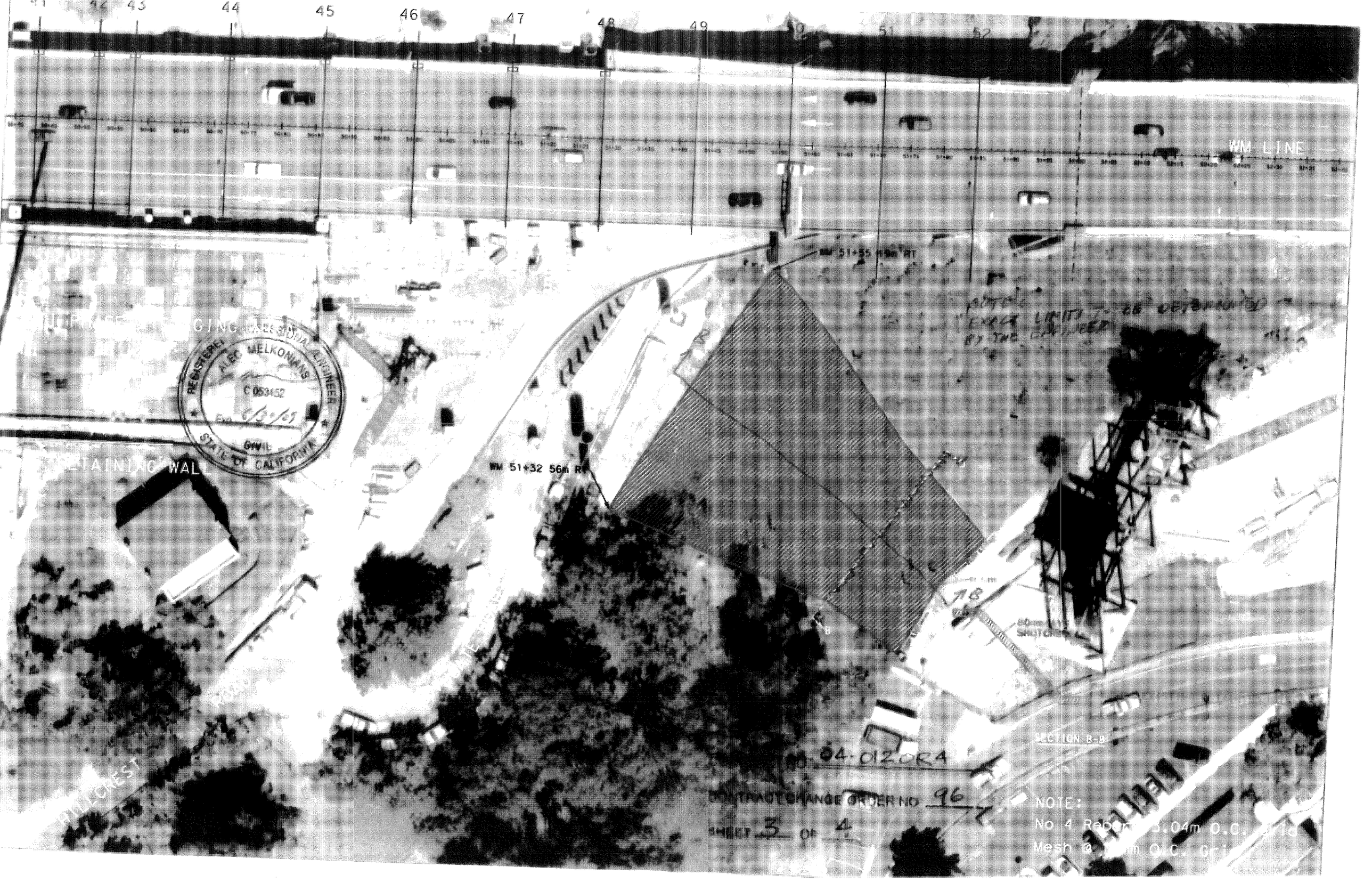

42
43
44
45
46
47
48
49
50
51
52
WM LINE
WM 51+55 19m RT
WM 51+32 56m RT
RETAINING WALL
RIDGEWOOD
PILLCREST
SECTION B-B
NO. 04-012OR4
CONTRACT CHANGE ORDER NO 96
SHEET 3 OF 4
NOTE:
No 4 Rebars 5.04m O.C. Grid
Mesh @ 1.0m O.C. Grid
REGISTERED PROFESSIONAL ENGINEER
ALEC MELKONIANS
C 053452
Exp. 6/30/05
CIVIL
STATE OF CALIFORNIA

NOTE:
EXACT LIMITS OF SHOTCRETE TO BE
DETERMINED BY THE
ENGINEER.

38 39 40 41 42 43 44 45 46 47 48 49 50 51 52

CONTRACT NO. 04-0120R4

CONTRACT CHANGE ORDER NO 96

SHEET 4 OF 4

STATE OF CALIFORNIA - DEPARTMENT OF TRANSPORTATION

CONTRACT CHANGE ORDER MEMORANDUM

RECEIVED
DATE: 10/19/2007

TO: MIKE FORNER / DENNIS TURCHON

FROM: BILL CASEY

FILE: E.A. 04 - 0120R4 007139 MAR -4 08
CO-RTE-PM SF-80-12.6/13.2
FED. NO. ACBRIM-080-1(097)N

CCO#: 96 | SUPPLEMENT#: 0 | Category Code: CCXX

CONTINGENCY BALANCE (incl. this change) **$121,379,501.08**

COST: **$190,000.00** INCREASE ☑ DECREASE ☐

HEADQUARTERS APPROVAL REQUIRED? ☐ YES ☑ NO

SUPPLEMENTAL FUNDS PROVIDED: **$0.00**

IS THIS REQUEST IN ACCORDANCE WITH ENVIRONMENTAL DOCUMENTS? ☑ YES ☐ NO

CCO DESCRIPTION:
Shotcrete South Slope Protection

PROJECT DESCRIPTION:
CONSTRUCT ROUTE 80 TEMP BYPASS STRUCTURE

Original Contract Time:	Time Adj. This Change:	Previously Approved CCO Time Adjustments:	Percentage Time Adjusted: (including this change)	Total # of Unreconciled Deferred Time CCO(s): (including this change)
475 Day(s)	0 Day(s)	381 Day(s)	80 %	7

THIS CHANGE ORDER PROVIDES FOR:

The implementation of longer term SWPPP measures to protect the existing steep slopes adjacent to Bents 48 and 49 of the Temporary Bypass Structure (TBS) on Yerba Buena Island (YBI).

Due to time extension for this project consistent with the December 14, 2006 Department Strategy Memo, approved by Richard Land and Tony Anziano, it is necessary to implement longer lasting and cost effective SWPPP Best Management Practice (BMP) measures. In the past, plastic visquene sheeting has been placed on the slopes adjacent to Bents 48 and 49 to protect these slopes from erosion and soil slip outs associated with winter season rain storms. However, this BMP is not completely effective and requires constant maintenance throughout the winter season. In order to provide a longer lasting solution that will extend beyond the life of this contract, and through the service life of the TBS Structure until a permanent solution is implemented in a future YBI construction contract, shotcrete slope protection will be placed.

For this work, the Contractor will be compensated at Extra Work at Force Account for an estimated cost of $190,000.00., which can be financed from the project's contingency funds.

A cost analysis, as well as other supporting documents and information relative to this change order, are on file with the project records.

This change was requested by Alec Melkonians - Asst. Project Manager. This change was discussed and concurred by Dragomir Bogdanic - SWPPP, and Lina Ellis - Maintenance.

No adjustment of the contract time is warranted, as this change does not affect the controlling operation.

The Resident Engineer recommends this change order be approved.

CONCURRED BY:		
Construction Engineer:	Raoul Maltez	Date
Bridge Engineer:		Date
Project Engineer:		Date
Project Manager:	Alec Melkonians	Date 10/25/07
FHWA Rep.:		Date
Environmental:	Dragomir Bogdanic	Date 10/24/07
Other (specify):	Lina Ellis, Maintenance	Date 11/28/07
Other (specify):		Date
District Prior Approval By:		Date
HQ (Issue Approve) By:		Date
Resident Engineer's Signature:		Date

12-5-07

ESTIMATE OF COST

	THIS REQUEST	TOTAL TO DATE
ITEMS	$0.00	$0.00
FORCE ACCOUNT	$190,000.00	$190,000.00
AGREED PRICE	$0.00	$0.00
ADJUSTMENT	$0.00	$0.00
TOTAL	$190,000.00	$190,000.00

FEDERAL PARTICIPATION

☐ PARTICIPATING ☐ PARTICIPATING IN PART ☐ NONE
☐ NON-PARTICIPATING (MAINTENANCE) ☑ NON-PARTICIPATING

FEDERAL SEGREGATION (if more than one Funding Source or P.I.P. type)
☑ CCO FUNDED PER CONTRACT ☐ CCO FUNDED AS FOLLOWS

FEDERAL FUNDING SOURCE	PERCENT

ADA Notice: For individuals with sensory disabilities, this document is available in alternate formats. For information call: (916) 654-6410 or TDD (916) 654-3880 or write Records and Forms Management, 1120 N Street, MS-89, Sacramento, CA 95814.

STATE OF CALIFORNIA - DEPARTMENT OF TRANSPORTATION

CONTRACT CHANGE ORDER

Change Requested by: Engineer

CCO 96	Suppl. No. 1	Contract No. 04 - 0120R4	Road SF-80-12.6/13.2	FED. AID LOC.: ACBRIM-080-1(097)N

To: CC MYERS INC

You are directed to make the following changes from the plans and specifications or do the following described work not included in the plans and specifications for this contract. ***NOTE: This change order is not effective until approved by the Engineer.***

Description of work to be done, estimate of quantities and prices to be paid. (Segregate between additional work at contract price, agreed price and force account.) Unless otherwise stated, rates for rental of equipment cover only such time as equipment is actually used and no allowance will be made for idle time. This last percentage shown is the net accumulated increase or decrease from the original quantity in the Engineer's Estimate.

Extra Work at Force Account:

Provide additional funds.

Estimated cost of Extra Work at Force Account $40,000.00

Estimated Cost: **Increase** ☑ **Decrease** ☐ **$40,000.00**

By reason of this order the time of completion will be adjusted as follows: 0 days

Submitted by

Signature	Resident Engineer	Date
	BILL CASEY	6-11-08

Approval Recommended by

Signature	Area Construction Manager	Date
	DENNIS TURCHON	6/11/08

Engineer Approval by

Signature	Area Construction Manager	Date
	DENNIS TURCHON	6/18/08

We the undersigned contractor, have given careful consideration to the change proposed and agree, if this proposal is approved, that we will provide all equipment, furnish the materials, except as may otherwise be noted above, and perform all services necessary for the work above specified, and will accept as full payment therefor the prices shown above.

NOTE: If you, the contractor, do not sign acceptance of this order, your attention is directed to the requirements of the specifications as to proceeding with the ordered work and filing a written protest within the time therein specified.

Contractor Acceptance by

Signature	(Print name and title)	Date
N/A	N/A	N/A

STATE OF CALIFORNIA - DEPARTMENT OF TRANSPORTATION

CONTRACT CHANGE ORDER

Change Requested by: Engineer

CCO 96	Suppl. No. 2	Contract No. 04 - 0120R4	Road SF-80-12.6/13.2	FED. AID LOC.: ACBRIM-080-1(097)N

To: **CC MYERS INC**

You are directed to make the following changes from the plans and specifications or do the following described work not included in the plans and specifications for this contract. ***NOTE: This change order is not effective until approved by the Engineer.***

Description of work to be done, estimate of quantities and prices to be paid. (Segregate between additional work at contract price, agreed price and force account.) Unless otherwise stated, rates for rental of equipment cover only such time as equipment is actually used and no allowance will be made for idle time. This last percentage shown is the net accumulated increase or decrease from the original quantity in the Engineer's Estimate.

Extra Work at Force Account:

Provide additional funds for the implementation of longer term SWPPP measures to protect the existing steep slopes adjacent to Bents 48 and 49 of the Temporary Bypass Structure (TBS) on Yerba Buena Island (YBI).

Estimated cost of Extra Work at Force Account $100,000.00

RECEIVED
SEP 23 09
DIST 04

Estimated Cost: Increase ☑ **Decrease** ☐ **$100,000.00**

By reason of this order the time of completion will be adjusted as follows: 0 days

Submitted by

Signature	Resident Engineer	Date
	BILL CASEY	9-15-09

Approval Recommended by

Signature	Area Construction Manager	Date
Deanna Vilcheck	DEANNA VILCHECK	9/15/09

Engineer Approval by

Signature	Area Construction Manager	Date
Deanna Vilcheck	DEANNA VILCHECK	9/17/09

We the undersigned contractor, have given careful consideration to the change proposed and agree, if this proposal is approved, that we will provide all equipment, furnish the materials, except as may otherwise be noted above, and perform all services necessary for the work above specified, and will accept as full payment therefor the prices shown above.

NOTE: If you, the contractor, do not sign acceptance of this order, your attention is directed to the requirements of the specifications as to proceeding with the ordered work and filing a written protest within the time therein specified.

Contractor Acceptance by

Signature	(Print name and title)	Date
N/A	N/A	N/A

STATE OF CALIFORNIA - DEPARTMENT OF TRANSPORTATION

CONTRACT CHANGE ORDER MEMORANDUM

DATE: 8/18/2009 Page 1 of 1

TO: MIKE FORNER / DEANNA VILCHECK

FROM: BILL CASEY

FILE: E.A. 04 - 0120R4
CO-RTE-PM SF-80-12.6/13.2
FED. NO. ACBRIM-080-1(097)N

CCO#: 96 | SUPPLEMENT#: 2 | Category Code: CDXX

CONTINGENCY BALANCE (incl. this change) **$16,966,434.59**

COST: **$100,000.00** INCREASE ☑ DECREASE ☐

HEADQUARTERS APPROVAL REQUIRED? ☑ YES ☐ NO

SUPPLEMENTAL FUNDS PROVIDED: **$0.00**

IS THIS REQUEST IN ACCORDANCE WITH ENVIRONMENTAL DOCUMENTS? ☑ YES ☐ NO

CCO DESCRIPTION:
Addt'l Funds for Slope Protection

PROJECT DESCRIPTION:
CONSTRUCT ROUTE 80 TEMP BYPASS STRUCTURE

Original Contract Time:	Time Adj. This Change:	Previously Approved CCO Time Adjustments:	Percentage Time Adjusted: (including this change)	Total # of Unreconciled Deferred Time CCO(s): (including this change)
475 Day(s)	0 Day(s)	0 Day(s)	0 %	0

THIS CHANGE ORDER PROVIDES FOR:

Provide additional funds to pay for longer term SWPPP measures to protect the existing steep slopes adjacent to Bents 48 and 49 of the Temporary Bypass Structure (TBS) on Yerba Buena Island (YBI).

The original contract change order calls for the implementation of longer term SWPPP measures to protect the existing steep slopes adjacent to Bents 48 and 49 of the TBS on Yerba Buena Island (YBI). Due to time extension for this project consistent with the December 14, 2006 (Department Strategy Memo), approved by Richard Land and Tony Anziano, it is necessary to implement longer lasting and effective SWPPP Best Management Practices (BMPs) measures.

To date, the existing funds have been depleted and it is proposed to pay all oustanding extra work bills in the holding file and to capture all remaining SWPPP measures work since the orignal work estimate was underestimated by the Engineer.

For this work, the Contractor will be compensated at Extra Work at Force Account for an estimated cost of $100,000.00, which can be financed from the project's contingency funds.

The Contractor's signature is not required for additional funds for Extra Work at Force Account change orders. Therefore this change order is being issued unilaterally.

Alec Melkonians, Asst. Project Manager, and Hong Wong, Project Engineer, concurred on this change and no adjustment of the contract time is warranted, as this change does not affect the controlling operation.

CONCURRED BY:

Construction Engineer:	BILL CASEY R.E	Date 9-15-09
Bridge Engineer:		Date
Project Engineer:	Hong Wong, PE	Date 8/31/09
Project Manager:	Alec Melkonians	Date 8/18/09
FHWA Rep.:		Date
Environmental:		Date
Other (specify):		Date
Other (specify):		Date
District Prior Approval By:		Date
HQ (Issue Approve) By:	LARRY Sallane	Date 9/17/09
Resident Engineer's Signature:		Date 9-15-09

ESTIMATE OF COST

	THIS REQUEST	TOTAL TO DATE
ITEMS	$0.00	$0.00
FORCE ACCOUNT	$100,000.00	$330,000.00
AGREED PRICE	$0.00	$0.00
ADJUSTMENT	$0.00	$0.00
TOTAL	$100,000.00	$330,000.00

FEDERAL PARTICIPATION

☐ PARTICIPATING ☐ PARTICIPATING IN PART ☑ NONE
☐ NON-PARTICIPATING (MAINTENANCE) ☐ NON-PARTICIPATING

FEDERAL SEGREGATION (if more than one Funding Source or P.I.P. type)
☐ CCO FUNDED PER CONTRACT ☐ CCO FUNDED AS FOLLOWS

FEDERAL FUNDING SOURCE PERCENT

ADA Notice: For individuals with sensory disabilities, this document is available in alternate formats. For information call: (916) 654-6410 or TDD (916) 654-3880 or write Records and Forms Management, 1120 N Street, MS-89, Sacramento, CA 95814

STATE OF CALIFORNIA - DEPARTMENT OF TRANSPORTATION

CONTRACT CHANGE ORDER

Change Requested by: Engineer

CCO 97	Suppl. No. 0	Contract No. 04 - 0120R4	Road SF-80-12.6/13.2	FED. AID LOC.: ACBRIM-080-1(097)N

To: CC MYERS INC

You are directed to make the following changes from the plans and specifications or do the following described work not included in the plans and specifications for this contract. ***NOTE: This change order is not effective until approved by the Engineer.***

Description of work to be done, estimate of quantities and prices to be paid. (Segregate between additional work at contract price, agreed price and force account.) Unless otherwise stated, rates for rental of equipment cover only such time as equipment is actually used and no allowance will be made for idle time. This last percentage shown is the net accumulated increase or decrease from the original quantity in the Engineer's Estimate.

Extra Work at Force Account:

Perform the following work concerning long lead time materials necessary for the construction of Bent 52A and the Skid Bent Footings of the East Tie-In structure as determined by the Engineer:

1) Furnish all 1562mm diameter steel casings for the 1220mm diameter CIDH piles.

2) Furnish all 43mm and 57mm reinforcing steel bars required for all footings, columns and bent caps.

Furnishing of the steel casing shall include fabrication and delivery to the project site. Furnishing of the reinforcing steel shall include purchase and delivery of steel to the fabrication yard only.

Any additional costs associated with incorporating the materials into the work are deferred and shall be paid under a separate change order.

Estimated cost of Extra Work at Force Account $850,000.00

RECEIVED
OCT 12 '09

Estimated Cost: Increase ☑ Decrease ☐ **$850,000.00**

By reason of this order the time of completion will be adjusted as follows: Deferred

Submitted by

Signature	Resident Engineer	Date
	BILL CASEY	11-6-07

Approval Recommended by

Signature	Area Construction Manager	Date
	DENNIS TURCHON	11/6/07

Engineer Approval by

Signature	Area Construction Manager	Date
	DENNIS TURCHON	11/16/07

We the undersigned contractor, have given careful consideration to the change proposed and agree, if this proposal is approved, that we will provide all equipment, furnish the materials, except as may otherwise be noted above, and perform all services necessary for the work above specified, and will accept as full payment therefor the prices shown above.

NOTE: If you, the contractor, do not sign acceptance of this order, your attention is directed to the requirements of the specifications as to proceeding with the ordered work and filing a written protest within the time therein specified.

Contractor Acceptance by

Signature	(Print name and title)	Date
	DANIEL E. HIMICK, PRESIDENT	11/09/07

STATE OF CALIFORNIA - DEPARTMENT OF TRANSPORTATION

CONTRACT CHANGE ORDER MEMORANDUM

DATE: 11/5/2007 RECEIVED

TO: MIKE FORNER / DENNIS TURCHON	FILE: E.A. 04 - 0120R4 006780 DEC 14 6
FROM: BILL CASEY	CO-RTE-PM SF-80-12.6/13.2
	FED. NO. ACBRIM-080-1(097)N
CCO#: 97 SUPPLEMENT#: 0 Category Code: CHPA	CONTINGENCY BALANCE (incl. this change) $119,712,535.29
COST: $850,000.00 INCREASE ☑ DECREASE ☐	HEADQUARTERS APPROVAL REQUIRED? ☑ YES ☐ NO
SUPPLEMENTAL FUNDS PROVIDED: $0.00	IS THIS REQUEST IN ACCORDANCE WITH ENVIRONMENTAL DOCUMENTS? ☑ YES ☐ NO
CCO DESCRIPTION: Bent 52A & Skid Bent Ftgs. Procurement	**PROJECT DESCRIPTION:** CONSTRUCT ROUTE 80 TEMP BYPASS STRUCTURE

Original Contract Time:	Time Adj. This Change:	Previously Approved CCO Time Adjustments:	Percentage Time Adjusted: (including this change)	Total # of Unreconciled Deferred Time CCO(s): (including this change)
475 Day(s)	DEF Day(s)	381 Day(s)	80 %	8

THIS CHANGE ORDER PROVIDES FOR:

The early procurement of long lead time steel casings and reinforcement bars for the East Tie-In (ETI) structure in order to avoid potential delay to the contract completion.

This contract provides for the construction of a temporary detour for both eastbound and westbound I-80 traffic that allows for the tie in of the east span of the new San Francisco Oakland Bay Bridge (SFOBB) to Yerba Buena Island. The detour will allow for the construction of the permanent structure, the Yerba Buena Interim Transition Structure, which connects the signature SAS structure to Yerba Buena Island.

The detour consist of three main structures, the East Tie-In (ETI) to the bridge, the West Tie-In to the island and the viaduct structure between the two tie ins. The contract was awarded as a performance based project with the contractor responsible for meeting the design criteria specified in the contract.

A December 14, 2006 Department strategy memorandum, approved by Tony Anziano, Toll Bridge Program Manager, and Richard Land, Chief Engineer, recommended that the Department assume the design responsibility for the East Tie-In (ETI) structure. Based on this memorandum, the design of the structure was changed from a design that incorporated the existing steel truss bridge with the new structure to a design that replaces the existing structure with a new structure (roll out / roll in).

The new ETI design requires the construction of an additional bent (Bent 52A) for the structure itself and numerous skid footings that allow for the roll out / roll in concept. This change order provides for the early procurement of the large diameter steel casings and large reinforcing steel bars that require significant lead times to furnish. The actual plans and specifications required to construct the bents and footings are currently being finalized and a separate change order is expected to be issued in the coming months to provide for this work.

Based on a CPM analysis of the project schedule, failure to provide for this early procurement could delay the completion of this contract and potential delay the entire SFOBB corridor.

The work shall be performed as extra work at force account at an estimated cost of $850,000.00 and shall be financed from the contract's contingency funds. A cost analysis is on file.

This change was requested by Mike Whiteside, YBI Coordination Engineer, on September 28, 2007.

Adjustment of contract time is deferred as the work may affect the controlling operation.

4997.01

ADA Notice: For individuals with sensory disabilities, this document is available in alternate formats. For information call: (916) 654-6410 or TDD (916) 654-3880 or write Records and Forms Management, 1120 N Street, MS-89, Sacramento, CA 95814.

CONTRACT CHANGE ORDER MEMORANDUM

CONCURRED BY:		
Construction Engineer:	Mahantesh Anigol	Date 11/6/07
Bridge Engineer:		Date
Project Engineer:	Hong Wong	Date 11/6/07
Project Manager:	Alec Melkonians	Date 11/6/07
FHWA Rep.:		Date
Environmental:		Date
Other (specify):	Bill Zanetich, Maintenance	Date
Other (specify):		Date
District Prior Approval By:		Date
HQ (Issue Approve) By:	Ken Darby, HQ CCO Engineer	Date 11/6/07
Resident Engineer's Signature:		Date

11-6-07

ESTIMATE OF COST

	THIS REQUEST	TOTAL TO DATE
ITEMS	$0.00	$0.00
FORCE ACCOUNT	$850,000.00	$850,000.00
AGREED PRICE	$0.00	$0.00
ADJUSTMENT	$0.00	$0.00
TOTAL	$850,000.00	$850,000.00

FEDERAL PARTICIPATION

☐ PARTICIPATING ☐ PARTICIPATING IN PART ☐ NONE
☐ NON-PARTICIPATING (MAINTENANCE) ☑ NON-PARTICIPATING

FEDERAL SEGREGATION (if more than one Funding Source or P.I.P. type)
☑ CCO FUNDED PER CONTRACT ☐ CCO FUNDED AS FOLLOWS

FEDERAL FUNDING SOURCE	PERCENT

ADA Notice: For individuals with sensory disabilities, this document is available in alternate formats. For information call: (916) 654-6410 or TDD (916) 654-3880 or write Records and Forms Management, 1120 N Street, MS-89, Sacramento, CA 95814.

CONTRACT CHANGE ORDER

Change Requested by: Engineer

CCO 98	Suppl. No. 0	Contract No. 04 - 0120R4	Road SF-80-12.6/13.2	FED. AID LOC.: ACBRIM-080-1(097)N

To: CC MYERS INC

You are directed to make the following changes from the plans and specifications or do the following described work not included in the plans and specifications for this contract. ***NOTE: This change order is not effective until approved by the Engineer.***

Description of work to be done, estimate of quantities and prices to be paid. (Segregate between additional work at contract price, agreed price and force account.) Unless otherwise stated, rates for rental of equipment cover only such time as equipment is actually used and no allowance will be made for idle time. This last percentage shown is the net accumulated increase or decrease from the original quantity in the Engineer's Estimate.

Extra Work at Force Account:

Compensate the Contractor for costs associated with the additional off-load and storage of the fabricated steel for the construction of the Temporary Bypass Structure (Bridge No. 34-0006 (TEMP)) Viaduct superstructure that is shipped from the fabricator Dongkuk Structures & Construction Co., Ltd (Dongkuk) to the project site.

Compensation paid at force account shall include ship off-loading costs at the Port of San Francisco, off-site steel storage costs and steel transportation costs associated with the transport of the steel from the Port of San Francisco to the project site.

The cost of handling the steel at the storage site once it has been off-loaded from the ship shall not be considered compensable under this change order.

Estimated Cost of Extra Work at Force Account $1,000,000.00

Adjustment of Compensation at Lump Sum:

The Contractor shall provide a credit to the Department for their as-planned costs of off-loading the fabricated steel, from the Temporary Bypass Structure (Bridge No. 34-0006 (TEMP)) Viaduct superstructure, shipped from their fabricator Dongkuk Structures & Construction Co., Ltd (Dongkuk) located in South Korea to the project site. For these costs, the Contractor shall provide an agreed lump sum credit of $154,630.00 to the Department.

Total Cost of Adjustment of Compensation at Lump Sum .....($154,630.00)

Estimated Cost: Increase ☑ Decrease ☐ **$845,370.00**

By reason of this order the time of completion will be adjusted as follows: 0 days

Submitted by

Signature	Resident Engineer	Date
	BILL CASEY	5-27-08

Approval Recommended by

Signature	Area Construction Manager	Date
	DENNIS TURCHON	5/28/08

Engineer Approval by

Signature	Area Construction Manager	Date
	DENNIS TURCHON	6/18/08

We the undersigned contractor, have given careful consideration to the change proposed and agree, if this proposal is approved, that we will provide all equipment, furnish the materials, except as may otherwise be noted above, and perform all services necessary for the work above specified, and will accept as full payment therefor the prices shown above.

NOTE: If you, the contractor, do not sign acceptance of this order, your attention is directed to the requirements of the specifications as to proceeding with the ordered work and filing a written protest within the time therein specified.

Contractor Acceptance by

Signature	(Print name and title)	Date
	DANIEL E. HUNICK, PRESIDENT	6/18/08

STATE OF CALIFORNIA - DEPARTMENT OF TRANSPORTATION

CONTRACT CHANGE ORDER

Change Requested by: Engineer

CCO 98	Suppl. No. 1	Contract No. 04 - 0120R4	Road SF-80-12.6/13.2	FED. AID LOC.:

To: CC MYERS INC

You are directed to make the following changes from the plans and specifications or do the following described work not included in the plans and specifications for this contract. ***NOTE: This change order is not effective until approved by the Engineer.***

Description of work to be done, estimate of quantities and prices to be paid. (Segregate between additional work at contract price, agreed price and force account.) Unless otherwise stated, rates for rental of equipment cover only such time as equipment is actually used and no allowance will be made for idle time. This last percentage shown is the net accumulated increase or decrease from the original quantity in the Engineer's Estimate.

Extra Work at Force Account:

Provide additional funds to compensate the Contractor for costs associated with the additional off-load and storage of the fabricated steel for the construction of the Temporary Bypass Structure (Bridge No. 34-0006 (TEMP)) Viaduct superstructure that is shipped from the fabricator Dongkuk Structures & Construction Co., Ltd (Dongkuk) to the project site

Compensation paid at force account shall include ship off-loading costs at the Port of San Francisco, off-site steel storage costs and steel transportation costs associated with the transport of the steel from the Port of San Francisco to the project site.

The cost of handling the steel at the storage site once it has been off-loaded from the ship shall not be considered compensable under this change order.

Estimated Cost of Extra Work at Force Account $151,000.00

Estimated Cost: Increase ☑ Decrease ☐ **$151,000.00**

By reason of this order the time of completion will be adjusted as follows: 0 days

Submitted by

Signature	Resident Engineer	Date
	BILL CASEY	12-11-09

Approval Recommended by

Signature	Area Construction Manager	Date
Deanna Vilcheck	DEANNA VILCHECK	12/14/09

Engineer Approval by

Signature	Area Construction Manager	Date
Deanna Vilcheck	DEANNA VILCHECK	12/14/09

We the undersigned contractor, have given careful consideration to the change proposed and agree, if this proposal is approved, that we will provide all equipment, furnish the materials, except as may otherwise be noted above, and perform all services necessary for the work above specified, and will accept as full payment therefor the prices shown above.

NOTE: If you, the contractor, do not sign acceptance of this order, your attention is directed to the requirements of the specifications as to proceeding with the ordered work and filing a written protest within the time therein specified.

Contractor Acceptance by

Signature	(Print name and title)	Date
N/A	N/A	N/A

STATE OF CALIFORNIA - DEPARTMENT OF TRANSPORTATION

CONTRACT CHANGE ORDER MEMORANDUM

TO: MIKE FORNER / DEANNA VILCHECK	FILE: E.A. 04 - 0120R4
	CO-RTE-PM SF-80-12.6/13.2
FROM: BILL CASEY	FED. NO.
CCO#: 98 SUPPLEMENT#: 1 Category Code: BZZZ	CONTINGENCY BALANCE (incl. this change) $44,492,073.59
COST: $151,000.00 INCREASE ☑ DECREASE ☐	HEADQUARTERS APPROVAL REQUIRED? ☑ YES ☐ NO
SUPPLEMENTAL FUNDS PROVIDED: $0.00	IS THIS REQUEST IN ACCORDANCE WITH ENVIRONMENTAL DOCUMENTS? ☑ YES ☐ NO
CCO DESCRIPTION: Add Funds Steel Storage & Handling Costs	**PROJECT DESCRIPTION:** CONSTRUCT ROUTE 80 TEMP BYPASS STRUCTURE

Original Contract Time:	Time Adj. This Change:	Previously Approved CCO Time Adjustments:	Percentage Time Adjusted: (including this change)	Total # of Unreconciled Deferred Time CCO(s): (including this change)
475 Day(s)	0 Day(s)	1600 Day(s)	337 %	0

THIS CHANGE ORDER PROVIDES FOR:

...additional funds for compensation to the contractor for additional steel handling costs incurred due to Department caused restrictions to the project work site.

This project, the Yerba Buena Island Detour (YBID), was awarded in March 2004 to construct a detour that will allow for the tie in of the new east span of the San Francisco Oakland Bay Bridge to Yerba Buena Island. The YBID encompasses three main structures, the East Tie-In to the existing bridge, the West Tie-In (WTI) to Yerba Buena Island, and the Viaduct structure between the two tie ins.

Two separate Department strategy memorandums, dated December 14, 2006 and December 25, 2006, approved by Tony Anziano - Toll Bridge Program Manager and Richard Land - Chief Engineer, recommended that the Department assume responsibility for the designs of the East Tie-In (ETI) and West Tie-In (WTI) portions of this contract, and incorporated seismic retrofit work of the permanent Yerba Buena Island Transition Structure (YBITS) onto this project. The approval of these strategy memorandums extended the project completion date approximately 5 years.

This change order concerns additional costs associated with the double handling of fabricated steel to be erected for the Viaduct structure. The viaduct consists of 4 spans of a double deck steel truss approximately 20 meters wide and 320 meters long with a weight of over 4,300 metric tons.

The implementation of the strategy memos resulted in the construction of 13 large foundations and columns with this work taking place in the location that the contractor had planned to use as their lay down yard for the fabricated Viaduct steel after it's shipment from their fabricator. With these obstructions and additional added work to the contract, the as-planned lay down yard was not capable of holding the amount of steel being delivered to the project site and the steel had to be delivered and stored off-site and then transported to the jobsite on an as-needed basis.

The contractor had identified an unloading and storage facility at the Port of San Francisco that was used as the off-site storage area. Along with the rental of several barges to store large steel members that would be difficult to transport to the jobsite by land, this change order will compensate the contractor for the off-loading, storage and transportation costs incurred due to the required double handling of the material.

This change order shall provide compensation for the actual unloading, storage and trucking costs incurred. The work will be paid for as extra work at force account for an estimated cost of $151,000.00 which shall be financed from the contract's contingency funds. A cost estimate is on file.

The Contractor's signature is not required for additional funds for Extra Work at Force Account change orders. Therefore this change order is being issued unilaterally.

No adjustment of contract time is warranted as the work will not affect the controlling operation.

This change was concurred by Alec Melkonians - Asst. Project Manager and Minh B. Nguyen - Project Engineer

Maintenance concurrence is not required as this change doesn't affect any permanent roadway features.

ADA Notice: For individuals with sensory disabilities, this document is available in alternate formats. For information call: (916) 654-6410 or TDD (916) 654-3880 or write Records and Forms Management, 1120 N Street, MS-89, Sacramento, CA 95814.

CONCURRED BY:		
Construction Engineer:	Bill Casey, Resident Engineer	Date 12-11-09
Bridge Engineer:		Date
Project Engineer:	Minh B. Nguyen, PE	Date 12-8-09
Project Manager:	Alec Melkonians	Date 12-8-09
FHWA Rep.:		Date
Environmental:		Date
Other (specify):		Date
Other (specify):		Date
District Prior Approval By:		Date
HQ (Issue Approve) By:	Bob Molera, HQ CCO Engineer	Date 12-17-09
Resident Engineer's Signature:		Date 12-11-09

ESTIMATE OF COST

	THIS REQUEST	TOTAL TO DATE
ITEMS	$0.00	$0.00
FORCE ACCOUNT	$151,000.00	$1,151,000.00
AGREED PRICE	$0.00	$0.00
ADJUSTMENT	$0.00	($154,630.00)
TOTAL	$151,000.00	$996,370.00

FEDERAL PARTICIPATION

☐ PARTICIPATING ☐ PARTICIPATING IN PART ☑ NONE
☐ NON-PARTICIPATING (MAINTENANCE) ☐ NON-PARTICIPATING

FEDERAL SEGREGATION (if more than one Funding Source or P.I.P. type)
☐ CCO FUNDED PER CONTRACT ☐ CCO FUNDED AS FOLLOWS

FEDERAL FUNDING SOURCE	PERCENT

ADA Notice: For individuals with sensory disabilities, this document is available in alternate formats. For information call: (916) 654-6410 or TDD (916) 654-3880 or write Records and Forms Management, 1120 N Street, MS-89, Sacramento, CA 95814.

CONTRACT CHANGE ORDER

Change Requested by: Engineer

CCO: 99	Suppl. No. 0	Contract No. 04 - 0120R4	Road SF-80-12.6/13.2	FED. AID LOC.: ACBRIM-080-1(097)N

To: **CC MYERS INC**

You are directed to make the following changes from the plans and specifications or do the following described work not included in the plans and specifications for this contract. ***NOTE: This change order is not effective until approved by the Engineer.***

Description of work to be done, estimate of quantities and prices to be paid. (Segregate between additional work at contract price, agreed price and force account.) Unless otherwise stated, rates for rental of equipment cover only such time as equipment is actually used and no allowance will be made for idle time. This last percentage shown is the net accumulated increase or decrease from the original quantity in the Engineer's Estimate.

Adjustment of Compensation at Lump Sum:

In accordance with Section 4-1.03 "Changes" of the contract Standard Specifications, provide compensation to the Contractor for additional steel erection costs to be incurred by the Contractor's subcontractor Danny's Construction Company, Inc (DCCI) due to all Department delays and all Department design enhancements to the steel viaduct of the Temporary Bypass Structure (Bridge No. 34-0006 (TEMP)) that were incorporated into Imbsen & Associates Inc. approved "Final Superstructure Resubmittal" viaduct plans (Sheets 1 through 112) dated July 19, 2007.

For this work, the Contractor will be compensated a lump sum of $862,614.00. This sum constitutes full and final compensation for all additional costs to be incurred by DCCI, including all markups, due to all Department changes and delays to the work concerning the erection of the viaduct structure as of the issuance of the viaduct plans dated July 19, 2007.

The temporary lateral stringer bracing at the upper deck shown on drawing sheets 7A, 7BR1, and 7C may be left in place. The temporary lateral bracing at floor beams shown on drawing sheet 7D shall be removed after construction.

The following 2 items of work pertaining to the erection of the steel viaduct have not been addressed by this change order and shall remain outstanding:

1) Costs associated with Department changes to the viaduct due to Department design enhancements ordered after the issuance of the viaduct plans dated July 19, 2007.

2) Costs associated with the adjustment of time-related overhead payments as they pertain to DCCI and the time extensions granted under Change Order No. 24, Change Order No. 24 - Supplement No. 2, Change Order No. 91, Change Order No. 91 - Supplement No. 1, and Change Order No. 80.

Total Cost of Adjustment of Compensation at Lump Sum $862,614.00

CONTRACT CHANGE ORDER

Change Requested by: Engineer

CCO 99	Suppl. No. 0	Contract No. 04 - 0120R4	Road SF-80-12.6/13.2	FED. AID LOC.: ACBRIM-080-1(097)N

Estimated Cost: Increase ☑ Decrease ☐ $862,614.00

By reason of this order the time of completion will be adjusted as follows: 0 days

Submitted by

Signature	Resident Engineer	Date
	BILL CASEY	4-14-08

Approval Recommended by

Signature	Area Construction Manager	Date
	DENNIS TURCHON	4/15/08

Engineer Approval by

Signature	Area Construction Manager	Date
	DENNIS TURCHON	5/19/08

We the undersigned contractor, have given careful consideration to the change proposed and agree, if this proposal is approved, that we will provide all equipment, furnish the materials, except as may otherwise be noted above, and perform all services necessary for the work above specified, and will accept as full payment therefor the prices shown above.

NOTE: **If you, the contractor, do not sign acceptance of this order, your attention is directed to the requirements of the specifications as to proceeding with the ordered work and filing a written protest within the time therein specified.**

Contractor Acceptance by

Signature	(Print name and title)	Date
	DANIEL E. HANCK, PRESIDENT	5/14/08

STATE OF CALIFORNIA - DEPARTMENT OF TRANSPORTATION

CONTRACT CHANGE ORDER MEMORANDUM

RECEIVED DATE: 4/10/2008

TO: MIKE FORNER / DENNIS TURCHON	FILE: E.A. 04 - 0120R4 007656 JUN 2008 CO-RTE-PM SF-80-12.6/13.2 FED. NO. ACBRIM-080-1(097)N
FROM: BILL CASEY	
CCO#: 99 SUPPLEMENT#: 0 Category Code: CHPA	CONTINGENCY BALANCE (incl. this change) $44,469,943.12
COST: $862,614.00 INCREASE ☑ DECREASE ☐	HEADQUARTERS APPROVAL REQUIRED? ☑ YES ☐ NO
SUPPLEMENTAL FUNDS PROVIDED: $0.00	IS THIS REQUEST IN ACCORDANCE WITH ENVIRONMENTAL DOCUMENTS? ☑ YES ☐ NO
CCO DESCRIPTION: VIA Erection Costs (July 2007 Plans)	**PROJECT DESCRIPTION:** CONSTRUCT ROUTE 80 TEMP BYPASS STRUCTURE

Original Contract Time:	Time Adj. This Change:	Previously Approved CCO Time Adjustments:	Percentage Time Adjusted: (including this change)	Total # of Unreconciled Deferred Time CCO(s): (including this change)
475 Day(s)	0 Day(s)	1195 Day(s)	252 %	7

THIS CHANGE ORDER PROVIDES FOR:

compensating the contractor for additional steel erection costs related to Department design enhancements.

This contract calls for the construction of a temporary detour for both eastbound and westbound I-80 traffic that allows for the tie in of the east span of the new San Francisco Oakland Bay Bridge (SFOBB) to Yerba Buena Island. The detour consists of three main structures, the east tie-in (ETI) to the bridge, the west tie-in (WTI) to the island and the viaduct structure between the two. The contract was awarded as a performance based project with the contractor responsible for meeting the design criteria specified in the contract.

This change order concerns additional steel erection costs pertaining to Department design enhancements to the viaduct structure. The viaduct consists of 4 spans of a double deck steel truss approximately 20 meters wide and 320 meters long with a weight of over 4,300 metric tons.

The Department's December 14, 2006 strategy memo states that the viaduct should be designed as a stand alone structure due to the anticipated lag in the completion of the ETI and WTI structures. This memo was approved by Tony Anziano, Toll Bridge Program Manager, and Richard Land, Chief Engineer.

In order to satisfy the Department that the viaduct structure will act as a stand alone structure, and that the top deck will be properly supported during the pouring of the upper deck slabs, the Office of Structures Design requested several design enhancements to the steel truss. These enhancements were implemented by the contractor's designer under Change Orders No. 50 and 67, and were incorporated into the contractor's approved viaduct plan sheets dated July 19, 2007 as summarized below:

1) Added temporary bracing and connections to support the top deck during concrete pouring.
2) Revised the arrangement of viaduct steel members at the connection to the ETI structure to meet the stand alone structure requirements for each structure.
3) Modified the exterior stringers, and the connection of the stringers to the floor beams.
4) Added support brackets and appurtenances to support the 300 NPS water line.

Change Order No. 80 was issued to provide compensation for the erection costs of the viaduct for changes made through the October 2006 drawings. This change order shall provide compensation for additional steel erection costs associated with these further design enhancements. The steel fabrication costs associated with these changes was compensated for under Change Order No. 105.

The contractor's subcontractor Danny's Construction Company, Inc. (DCCI) submitted costs totaling to approximately $936,757 (plus General contractor CCM markup) for additional costs associated with the erection of the steel truss of the viaduct due to Department changes. Analysis of these costs has shown that a portion of the costs requested by the contractor for removal of temporary bracing will not be required, since some of the temporary bracing can be left in place. A revised price of $806,181 (plus CCM markup) was agreed upon, based on this scope.

This change order provides compensation in the amount of $862,614 for Department changes. This sum represents the net additional erection costs due directly to Department ordered design changes.

ADA Notice: For individuals with sensory disabilities, this document is available in alternate formats. For information call: (916) 654-6410 or TDD (916) 654-3880 or write Records and Forms Management, 1120 N Street, MS-89, Sacramento, CA 95814.

Compensation shall be paid as an adjustment of compensation at an agreed lump sum of $862,614 which shall be financed from the contract's contingency funds. A detailed cost estimate is on file.

Costs concerning the contractor's adjustment of time-related overhead are not addressed by this change order and shall remain outstanding.

There will be no time adjustment by reason of this change since the work involved did not affect the controlling operation.

This change was concurred by Alec Melkonians - Asst. Project Manager, Lina Ellis - Structures Maintenance, and Patrick Treacy - HQ Assistant Construction Coordinator.

CONCURRED BY:			
Construction Engineer:		Date	
Bridge Engineer:		Date	
Project Engineer:		Date	
Project Manager:	Alec Melkonians	Date	4/11/08
FHWA Rep.:		Date	
Environmental:		Date	
Other (specify):	Patrick Treacy, HQ Asst.Const.Co	Date	4/11/08
Other (specify):	Lina Ellis, Maintenance	Date	4/16/08
District Prior Approval By:		Date	
HQ (Issue Approve) By:	Ken Darby, HQ CCO Engineer	Date	
Resident Engineer's Signature:		Date	4-16-08

ESTIMATE OF COST

	THIS REQUEST	TOTAL TO DATE
ITEMS	$0.00	$0.00
FORCE ACCOUNT	$0.00	$0.00
AGREED PRICE	$0.00	$0.00
ADJUSTMENT	$862,614.00	$862,614.00
TOTAL	$862,614.00	$862,614.00

FEDERAL PARTICIPATION

☐ PARTICIPATING ☐ PARTICIPATING IN PART ☐ NONE
☐ NON-PARTICIPATING (MAINTENANCE) ☑ NON-PARTICIPATING

FEDERAL SEGREGATION (if more than one Funding Source or P.I.P. type)
☑ CCO FUNDED PER CONTRACT ☐ CCO FUNDED AS FOLLOWS

FEDERAL FUNDING SOURCE	PERCENT

ADA Notice: For individuals with sensory disabilities, this document is available in alternate formats. For information call: (916) 654-6410 or TDD (916) 654-3880 or write Records and Forms Management, 1120 N Street, MS-89, Sacramento, CA 95814.

CONTRACT CHANGE ORDER

Change Requested by: Engineer

CCO 100	Suppl. No. 0	Contract No. 04 - 0120R4	Road SF-80-12.6/13.2	FED. AID LOC.: ACBRIM-080-1(097)N

To: **CC MYERS INC**

You are directed to make the following changes from the plans and specifications or do the following described work not included in the plans and specifications for this contract. ***NOTE: This change order is not effective until approved by the Engineer.***

Description of work to be done, estimate of quantities and prices to be paid. (Segregate between additional work at contract price, agreed price and force account.) Unless otherwise stated, rates for rental of equipment cover only such time as equipment is actually used and no allowance will be made for idle time. This last percentage shown is the net accumulated increase or decrease from the original quantity in the Engineer's Estimate.

Extra Work at Force Account:

As authorized by the Engineer, furnish and transport steel plates, angles and channels necessary in order to implement th Department design enhancements, ordered under Contract Change Order No. 67, to Span 51 of the steel viaduct of the Temporary Bypass Structure (Bridge No. 34-0006 (TEMP)). These enhancements have been incorporated into Imbsen & Associates Inc. approved "Final Superstructure Submittal CCO 67" viaduct plans (Sheets 1 through 112) dated July 19, 2007 in order to accommodate the East Tie-In Roll-Out / Roll-In design.

Compensation paid under this change order includes the purchase of materials and any cost associated with the transportation of these materials to the Contractor's fabricator, Dongkuk S&C, located in South Korea. Any additional cost associated with the actual fabrication, post-fabrication transportation and erection of Span 51 due to the Department ordered changes incorporated into the July 19, 2007 plans are deferred and shall be paid under a separate change order.

Estimated cost of Extra Work at Force Account $650,000.00

Estimated Cost: **Increase** ☑ **Decrease** ☐ **$650,000.00**

By reason of this order the time of completion will be adjusted as follows: Deferred

Submitted by

Signature	Resident Engineer BILL CASEY	Date 12-14-07

Approval Recommended by

Signature	Area Construction Manager DENNIS TURCHON	Date 12/14/07

Engineer Approval by

Signature	Area Construction Manager DENNIS TURCHON	Date 1/22/08

We the undersigned contractor, have given careful consideration to the change proposed and agree, if this proposal is approved, that we will provide all equipment, furnish the materials, except as may otherwise be noted above, and perform all services necessary for the work above specified, and will accept as full payment therefor the prices shown above.

NOTE: If you, the contractor, do not sign acceptance of this order, your attention is directed to the requirements of the specifications as to proceeding with the ordered work and filing a written protest within the time therein specified.

Contractor Acceptance by

Signature	(Print name and title) DANIEL E. HUMICK, PRESIDENT	Date 1/03/08

STATE OF CALIFORNIA - DEPARTMENT OF TRANSPORTATION

CONTRACT CHANGE ORDER MEMORANDUM

DATE: 12/10/2007 RECEIVED Page 1 of 2

TO: MIKE FORNER / DENNIS TURCHON

FROM: BILL CASEY

FILE: E.A. 04 - 0120R4
CO-RTE-PM SF-80-12.6/13.2 007138 MAR -4 08
FED. NO. ACBRIM-080-1(097)N

CCO#: **100**	SUPPLEMENT#: **0**	Category Code: **CHPA**	CONTINGENCY BALANCE (incl. this change) **$130,578,699.41**
COST: **$650,000.00**	INCREASE ☑ DECREASE ☐		HEADQUARTERS APPROVAL REQUIRED? ☑ YES ☐ NO
SUPPLEMENTAL FUNDS PROVIDED: **$0.00**			IS THIS REQUEST IN ACCORDANCE WITH ENVIRONMENTAL DOCUMENTS? ☑ YES ☐ NO

CCO DESCRIPTION:
Material Procurement Cost (Jul 07 Plans)

PROJECT DESCRIPTION:
CONSTRUCT ROUTE 80 TEMP BYPASS STRUCTURE

Original Contract Time:	Time Adj. This Change:	Previously Approved CCO Time Adjustments:	Percentage Time Adjusted: (including this change)	Total # of Unreconciled Deferred Time CCO(s): (including this change)
475 Day(s)	**DEF** Day(s)	**1195** Day(s)	**252** %	**8**

THIS CHANGE ORDER PROVIDES FOR:

The procurement of steel plates, angles and channels for Span 51 of the Viaduct structure.

This contract provides for the construction of a temporary detour for both eastbound and westbound I-80 traffic that allows for the tie in of the east span of the new San Francisco Oakland Bay Bridge (SFOBB) to Yerba Buena Island. The detour will allow for the construction of the permanent structure, the Yerba Buena Interim Transition Structure, which connects the signature SAS structure to Yerba Buena Island.

The detour consist of three main structures, the East Tie-In (ETI) to the bridge, the West Tie-In to the island and the viaduct structure between the two tie ins. The contract was awarded as a performance based project with the contractor responsible for meeting the design criteria specified in the contract.

A December 14, 2006 Department strategy memorandum, approved by Tony Anziano, Toll Bridge Program Manager, and Richard Land, Chief Engineer, recommended that the Department assume the design responsibility for the East Tie-In (ETI) structure. Based on this memorandum, the design of the structure was changed from a design that incorporated the existing steel truss bridge with the new structure to a design that replaces the existing structure with a new structure (roll out / roll in).

The new ETI design requires modifications to the eastern most span of the adjoining viaduct structure. These modifications were incorporated into the Contractor's viaduct design plans under Contract Change Order No. 67. This change order provides for the purchase of raw steel and accessories and the transport of this material to South Korea where the viaduct fabricator, Dongkuk S&C, will incorporate the materials into the fabrication of Span 51.

The material procurement is required immediately in order to avoid significant delays to the contract completion. Additional costs concerning the actual fabrication, post-fabrication transportation and the erection of the span shall are deferred and shall be paid under separate change orders.

The work shall be performed as extra work at force account at an estimated cost of $650,000.00 and shall be financed from the contract's contingency funds. A cost analysis is on file.

This change was requested by Tom Ostrom of the Office of Structures Design per Memorandum dated July 3, 2007.

Adjustment of contract time is deferred as the work may affect the controlling operation.

Maintenance concurrence is not required as this change order pertains to procurement of material only.

ADA Notice: For individuals with sensory disabilities, this document is available in alternate formats. For information call: (916) 654-6410 or TDD (916) 654-3880 or write Records and Forms Management, 1120 N Street, MS-89, Sacramento, CA 95814.

CONCURRED BY:		
Construction Engineer:	Mahantesh Anigol, Dist. Rep	Date
Bridge Engineer:	Tom Ostrom, OSD	Date 12/12/07
Project Engineer:	Hong Wong, PE	Date 12/11/07
Project Manager:	Alec Melkonians	Date 12/11/07
FHWA Rep.:		Date
Environmental:		Date
Other (specify):		Date
Other (specify):		Date
District Prior Approval By:		Date
HQ (Issue Approve) By:	Ken Darby, HQ CCO Engineer	Date 12/14/07
Resident Engineer's Signature:		Date

12-14-07

ESTIMATE OF COST

	THIS REQUEST	TOTAL TO DATE
ITEMS	$0.00	$0.00
FORCE ACCOUNT	$650,000.00	$650,000.00
AGREED PRICE	$0.00	$0.00
ADJUSTMENT	$0.00	$0.00
TOTAL	$650,000.00	$650,000.00

FEDERAL PARTICIPATION

☐ PARTICIPATING ☐ PARTICIPATING IN PART ☐ NONE
☐ NON-PARTICIPATING (MAINTENANCE) ☑ NON-PARTICIPATING

FEDERAL SEGREGATION (if more than one Funding Source or P.I.P. type)
☑ CCO FUNDED PER CONTRACT ☐ CCO FUNDED AS FOLLOWS

FEDERAL FUNDING SOURCE	PERCENT

ADA Notice: For individuals with sensory disabilities, this document is available in alternate formats. For information call: (916) 654-6410 or TDD (916) 654-3880 or write Records and Forms Management, 1120 N Street, MS-89, Sacramento, CA 95814.

CONTRACT CHANGE ORDER

Change Requested by: Engineer

CCO 101	Suppl. No. 0	Contract No. 04 - 0120R4	Road SF-80-12.6/13.2	FED. AID LOC.: ACBRIM-080-1(097)N

To: CC MYERS INC

You are directed to make the following changes from the plans and specifications or do the following described work not included in the plans and specifications for this contract. ***NOTE: This change order is not effective until approved by the Engineer.***

Description of work to be done, estimate of quantities and prices to be paid. (Segregate between additional work at contract price, agreed price and force account.) Unless otherwise stated, rates for rental of equipment cover only such time as equipment is actually used and no allowance will be made for idle time. This last percentage shown is the net accumulated increase or decrease from the original quantity in the Engineer's Estimate.

Extra Work at Lump Sum:

Perform all work shown on the plans and specifications of Pages No. 2 through 51 of this change order for the reconstruction of the Yerba Buena Island Viaduct Westbound Onramp.

For this work, the Contractor shall be compensated at a lump sum of $846,140.00. Except for the items of work specifically excluded below, this sum constitutes full and final compensation, including all markups, for all costs associated with the work of this change.

Total Cost of Extra Work at Lump Sum $846,140.00

The furnishing and installation of the lights standards, pull boxes, conduit, and other miscellaneous electrical items of work is not included under the scope of this change. Costs associated with these items shall be compensated separately from this change order.

All work associated with the implementation and maintenance of the Contractor's Storm Water Pollution Prevention Plan and erosion control shall be paid by the Department separately from this change order.

Flagging costs associated with this work shall be paid under Change Order No. 1 with these costs being paid at 50% by the Department. The remaining flagging costs are considered to be included in the lump sum payments made under this change order.

Should the Department require an engineered bridge removal plan or deck crack treatment for the work of this change, those costs shall be paid under a separate change order.

Any payment clauses contained within the specifications of this change order are superseded by the agreed lump sum payment provided above. All work shall be performed in accordance with the contract documents.

Estimated Cost: **Increase** ☑ **Decrease** ☐ **$846,140.00**

By reason of this order the time of completion will be adjusted as follows: 0 days

Submitted by

Signature	Resident Engineer	Date
	BILL CASEY	3-25-08

Approval Recommended by

Signature	Area Construction Manager	Date
	DENNIS TURCHON	3/27/08

Engineer Approval by

Signature	Area Construction Manager	Date
	DENNIS TURCHON	4/17/08

We the undersigned contractor, have given careful consideration to the change proposed and agree, if this proposal is approved, that we will provide all equipment, furnish the materials, except as may otherwise be noted above, and perform all services necessary for the work above specified, and will accept as full payment therefor the prices shown above.

NOTE: If you, the contractor, do not sign acceptance of this order, your attention is directed to the requirements of the specifications as to proceeding with the ordered work and filing a written protest within the time therein specified.

Contractor Acceptance by

Signature	(Print name and title)	Date
	DANIEL E. HMICK, PRESIDENT	4/14/08

CONTRACT NO. 04-0120R4

The special provisions contained herein have been prepared by or under the direction of the following Registered Persons.

STRUCTURES

Steve Margaris

REGISTERED CIVIL ENGINEER

CONTRACT NO. 04-0120R4

CONTRACT CHANGE ORDER NO 101

SHEET 2 OF 51

AMENDMENTS TO JULY 1999 STANDARD SPECIFICATIONS

8-2.__ PORTLAND CEMENT CONCRETE

Portland cement concrete shall conform to the provisions in Section 90, "Portland Cement Concrete," of the Standard Specifications and these special provisions.

References to Section 90-2.01, "Portland Cement," of the Standard Specifications shall mean Section 90-2.01, "Cement," of the Standard Specifications.

Mineral admixture shall be combined with cement in conformance with the provisions in Section 90-4.08, "Required Use of Mineral Admixtures," of the Standard Specifications for the concrete materials specified in Section 56-2, "Roadside Signs," of the Standard Specifications.

The requirements of Section 90-4.08, "Required Use of Mineral Admixture," of the Standard Specifications shall not apply to Section 19-3.025C, "Soil Cement Bedding," of the Standard Specifications.

The Department maintains a list of sources of fine and coarse aggregate that have been approved for use with a reduced amount of mineral admixture in the total amount of cementitious material to be used. A source of aggregate will be considered for addition to the approved list if the producer of the aggregate submits to the Transportation Laboratory certified test results from a qualified testing laboratory that verify the aggregate complies with the requirements. Prior to starting the testing, the aggregate test shall be registered with the Department. A registration number can be obtained by calling (916) 227-7228. The registration number shall be used as the identification for the aggregate sample in correspondence with the Department. Upon request, a split of the tested sample shall be provided to the Department. Approval of aggregate will depend upon compliance with the specifications, based on the certified test results submitted, together with any replicate testing the Department may elect to perform. Approval will expire 3 years from the date the most recent registered and evaluated sample was collected from the aggregate source.

Qualified testing laboratories shall conform to the following requirements:

A. Laboratories performing ASTM Designation: C 1293 shall participate in the Cement and Concrete Reference Laboratory (CCRL) Concrete Proficiency Sample Program and shall have received a score of 3 or better on all tests of the previous 2 sets of concrete samples.
B. Laboratories performing ASTM Designation: C 1260 shall participate in the Cement and Concrete Reference Laboratory (CCRL) Pozzolan Proficiency Sample Program and shall have received a score of 3 or better on the shrinkage and soundness tests of the previous 2 sets of pozzolan samples.

Aggregates on the list shall conform to one of the following requirements:

A. When the aggregate is tested in conformance with the requirements in California Test 554 and ASTM Designation: C 1293, the average expansion at one year shall be less than or equal to 0.040 percent; or
B. When the aggregate is tested in conformance with the requirements in California Test 554 and ASTM Designation: C 1260, the average of the expansion at 16 days shall be less than or equal to 0.15 percent.

The amounts of cement and mineral admixture used in cementitious material shall be sufficient to satisfy the minimum cementitious material content requirements specified in Section 90-1.01, "Description," or Section 90-4.05, "Optional Use of Chemical Admixtures," of the Standard Specifications and shall conform to the following:

A. The minimum amount of cement shall not be less than 75 percent by mass of the specified minimum cementitious material content.
B. The minimum amount of mineral admixture to be combined with cement shall be determined using one of the following criteria:

    1. When the calcium oxide content of a mineral admixture is equal to or less than 2 percent by mass, the amount of mineral admixture shall not be less than 15 percent by mass of the total amount of cementitious material to be used in the mix.
    2. When the calcium oxide content of a mineral admixture is greater than 2 percent by mass, and any of the aggregates used are not listed on the approved list as specified in these special provisions, then the amount of mineral admixture shall not be less than 25 percent by mass of the total amount of cementitious material to be used in the mix.
    3. When the calcium oxide content of a mineral admixture is greater than 2 percent by mass and the fine and coarse aggregates are listed on the approved list as specified in these special provisions, then the amount of mineral admixture shall not be less than 15 percent by mass of the total amount of cementitious material to be used in the mix.
    4. When a mineral admixture that conforms to the provisions for silica fume in Section 90-2.04, "Admixture Materials," of the Standard Specifications is used, the amount of mineral admixture shall not be less than 10 percent by mass of the total amount of cementitious material to be used in the mix.
    5. When a mineral admixture that conforms to the provisions for silica fume in Section 90-2.04, "Admixture Materials," of the Standard Specifications is used and the fine and coarse aggregates are listed on the approved list as specified in these special provisions, then the amount of mineral admixture shall not be less than 7 percent by mass of the total amount of cementitious material to be used in the mix.

C. The total amount of mineral admixture shall not exceed 35 percent by mass of the total amount of cementitious material to be used in the mix. Where Section 90-1.01, "Description," of the Standard Specifications specifies a maximum cementitious content in kilograms per cubic meter, the total mass of cement and mineral admixture per cubic meter shall not exceed the specified maximum cementitious material content.

CONTRACT NO. 04-0120K4 CONTRACT CHANGE ORDER NO 101
SHEET 5 OF 51

8-2.__ CORROSION CONTROL FOR PORTLAND CEMENT CONCRETE

Portland cement concrete in contact with soil or rock including that utilized for cast-in-drilled-hole concrete piles is considered to be in a corrosive environment and shall conform to the provisions in Section 90, "Portland Cement Concrete," of the Standard Specifications and these special provisions.

Cementitious material to be used in portland cement concrete shall conform to the provisions for cement and mineral admixtures in Section 90-2, "Materials," of the Standard Specifications, and shall be a combination of "Type II Modified" portland cement and mineral admixture.

Concrete in a corrosive environment shall contain not less than 400 kg of cementitous material per cubic meter.

No reduction in the cementitious material content specified or ordered, in conformance with the provisions in Section 90-4.05, "Optional Use of Chemical Admixtures," of the Standard Specifications, will be allowed for concrete in a corrosive environment.

Unless otherwise specified, for concrete in a corrosive environment, the amount of cement shall be 75 percent by mass, and the amount of mineral admixture to be combined with cement shall be 25 percent by mass, of the total amount of cementitious material to be used in the concrete mix. The calcium oxide content of mineral admixtures shall not exceed 10 percent.

Mineral admixture for concrete in a corrosive environment shall conform to ASTM Designation: C618 Class F or N.

The amount of free water used in concrete in a corrosive environment shall not exceed 160 kg/ m^3, plus 40 kg for each 100 kg of cementitious material in excess of 400 kg/ m^3.

Full compensation for conforming to the above requirements shall be considered as included in the contract prices paid for the various contract items of work and no additional compensation will be allowed therefor.

8-3.__ WELDING

GENERAL

Flux cored welding electrodes conforming to the requirements of AWS A5.20 E6XT-4 or E7XT-4 shall not be used to perform welding for this project.

Wherever reference is made to the following AWS welding codes in the Standard Specifications, on the plans, or in these special provisions, the year of adoption for these codes shall be as listed:

AWS Code	Year of Adoption
D1.1	2006
D1.4	2005
D1.5	2002
D1.6	1999

Requirements of the AWS welding codes shall apply unless otherwise specified in the Standard Specifications, on the plans, or in these special provisions. Wherever the abbreviation AWS is used, it shall be equivalent to the abbreviations ANSI/AWS or AASHTO/AWS.

Section 6.1.1.1 of AWS D1.5 is replaced with the following:

Quality Control (QC) shall be the responsibility of the Contractor. As a minimum, the Contractor shall perform inspection and testing of each weld joint prior to welding, during welding, and after welding as specified in this section and as necessary to ensure that materials and workmanship conform to the requirements of the contract documents.

Unless otherwise specified, Sections 6.1.3 through 6.1.4.3 of AWS D1.1, Section 7.1.2 of AWS D1.4, and Sections 6.1.1.2 through 6.1.3.3 of AWS D1.5 are replaced with the following:

The QC Inspector shall be the duly designated person who acts for and on behalf of the Contractor for inspection, testing, and quality related matters for all welding.

Quality Assurance (QA) is the prerogative of the Engineer. The QA Inspector is the duly designated person who acts for and on behalf of the Engineer.

The QC Inspector shall be responsible for quality control acceptance or rejection of materials and workmanship, and shall be currently certified as an AWS Certified Welding Inspector (CWI) in conformance with the requirements in AWS QC1, "Standard for AWS Certification of Welding Inspectors."

The QC Inspector may be assisted by an Assistant QC Inspector provided that this individual is currently certified as an AWS Certified Associate Welding Inspector (CAWI) in conformance with the requirements in AWS QC1, "Standard for AWS Certification of Welding Inspectors." The Assistant QC Inspector may perform inspection under the direct supervision of the QC Inspector provided the assistant is always within visible and audible range of the QC Inspector. The QC Inspector shall be responsible for signing all reports and for determining if welded materials conform to workmanship and acceptance criteria. The ratio of QC Assistants to QC Inspectors shall not exceed 5 to 1.

When the term "Inspector" is used without further qualification, it shall refer to the QC Inspector.

When any work is welded in conformance with the provisions in Section 75, "Miscellaneous Metal," of the Standard Specifications, not including Section 75-1.035, "Bridge Joint Restrainer Units," of the Standard Specifications, Section 6.1.4 of AWS D1.1 is replaced with the following:

The QC Inspector shall be responsible for quality control acceptance or rejection of materials and workmanship and shall be currently certified as an AWS CWI in conformance with the requirements in AWS QC1, "Standard for AWS Certification of Welding Inspectors," or as a Welding Inspector Specialist (WIS) in conformance with the requirements in AWS B5.2, "Specification for the Qualification of Welding Inspector Specialists and Welding Inspector Assistants."

Section 6.14.6, "Personnel Qualification," of AWS D1.1, Section 7.8, "Personnel Qualification," of AWS D1.4, and Section 6.1.3.4, "Personnel Qualification," of AWS D1.5 are replaced with the following:

Personnel performing nondestructive testing (NDT) shall be qualified and certified in conformance with the requirements of the American Society for Nondestructive Testing (ASNT) Recommended Practice No. SNT-TC-1A and the Written Practice of the NDT firm. The Written Practice of the NDT firm shall meet or exceed the guidelines of the ASNT Recommended Practice No. SNT-TC-1A. Individuals who perform NDT, review the results, and prepare the written reports shall be either:

A. Certified NDT Level II technicians, or;
B. Level III technicians who hold a current ASNT Level III certificate in that discipline and are authorized and certified to perform the work of Level II technicians.

Section 6.5.4 of AWS D1.5 is replaced with the following:

The QC Inspector shall inspect and approve each joint preparation, assembly practice, welding technique, joint fit-up, and the performance of each welder, welding operator, and tack welder to make certain that the applicable requirements of this code and the approved Welding Procedure Specification (WPS) are met. The QC Inspector shall examine the work to make certain that it meets the requirements of Sections 3 and 6.26. The size and contour of all welds shall be measured using suitable gages. Visual inspection for cracks in welds and base metal, and for other discontinuities shall be aided by strong light, magnifiers, or such other devices as may be helpful. Acceptance criteria different from those specified in this code may be used when approved by the Engineer.

Section 6.6.5, "Nonspecified NDT Other than Visual," of AWS D1.1, Section 7.6.5 of AWS D1.4 and Section 6.6.5 of AWS D1.5 shall not apply.

For any welding, the Engineer may direct the Contractor to perform NDT that is in addition to the visual inspection or NDT specified in the AWS or other specified welding codes, in the Standard Specifications, or in these special provisions. Except as provided for in these special provisions, additional NDT required by the Engineer, and associated repair work, will be paid for as extra work as provided in Section 4-1.03D, "Extra Work," of the Standard Specifications. Prior to release of welded material by the Engineer, if testing by NDT methods other than those originally specified discloses an attempt to defraud or reveals a gross nonconformance, all costs associated with the repair of the deficient area, including NDT of the weld and of the repair, and any delays caused by the repair, shall be at the Contractor's expense. A gross nonconformance is defined as the sum of planar type rejectable indications in more than 20 percent of the tested length.

When less than 100 percent of NDT is specified for any weld, it is expected that the entire length of weld meet the specified acceptance-rejection criteria. Should any welding deficiencies be discovered by additional NDT directed or performed by the Engineer that utilizes the same NDT method as that originally specified, all costs associated with the repair of the deficient area, including NDT of the weld and of the weld repair, and any delays caused by the repair, shall be at the Contractor's expense.

Repair work to correct welding deficiencies discovered by visual inspection directed or performed by the Engineer, and any associated delays or expenses caused to the Contractor by performing these repairs, shall be at the Contractor's expense.

The Engineer shall have the authority to verify the qualifications or certifications of any welder, QC Inspector, or NDT personnel to specified levels by retests or other means approved by the Engineer.

Inspection and approval of all joint preparations, assembly practices, joint fit-ups, welding techniques, and the performance of each welder, welding operator, and tack welder shall be documented by the QC Inspector on a daily basis for each day welding is performed. For each inspection, including fit-up, Welding Procedure Specification (WPS) verification, and final weld inspection, the QC Inspector shall confirm and document compliance with the requirements of the AWS or other specified code criteria and the requirements of these special provisions on all welded joints before welding, during welding, and after the completion of each weld.

In addition to the requirements specified in the applicable code, the period of effectiveness for a welder's or welding operator's qualification shall be a maximum of 3 years for the same weld process, welding position, and weld type. If welding will be performed without gas shielding, then qualification shall also be without gas shielding. Excluding welding of fracture critical members, a valid qualification at the beginning of work on a contract will be acceptable

for the entire period of the contract, as long as the welder's or welding operator's work remains satisfactory.

In addition to the requirements of AWS D1.1, welding procedures qualification for work welded in conformance with that code shall conform to the following requirements:

A. The travel speed, amperage, and voltage values that are used for tests conducted per AWS D1.1, Section 4.1.1, shall be consistent for each pass in a weld joint and shall in no case vary by more than ±10 percent for travel speed, ±10 percent for amperage, and ±7 percent for voltage as measured from a predetermined target value or average within each weld pass. The travel speed shall in no case vary by more than ±15 percent when using submerged arc welding.
B. When a nonstandard weld joint is to be made using a combination of WPSs, a single test may be conducted combining the WPSs to be used in production, provided the essential variables, including weld bead placement, of each process are limited to those established in Table 4.5.

In addition to the requirements of AWS D1.5, Section 5.12 or 5.13, welding procedures qualification for work welded in conformance with that code shall conform to the following requirements:

A. Unless considered prequalified, fillet welds shall be qualified in each position. The fillet weld soundness test shall be conducted using the essential variables of the WPS as established by the Procedure Qualification Record (PQR).
B. For qualification of joints that do not conform to Figures 2.4 and 2.5 of AWS D1.5, a minimum of two WPS qualification tests are required. The tests shall be conducted using both Figure 5.1 and Figure 5.3. The test conforming to Figure 5.1 shall be conducted in conformance with AWS D1.5, Section 5.12 or 5.13. The test conforming to Figure 5.3 shall be conducted using the welding electrical parameters that were established for the test conducted conforming to Figure 5.1. The ranges of welding electrical parameters established during welding per Figure 5.1 in conformance with AWS D1.5, Section 5.12, shall be further restricted according to the limits in Table 5.3 during welding per Figure 5.3.
C. Multiple zones within a weld joint may be qualified. The travel speed, amperage, and voltage values that are used for tests conducted per AWS D1.5 Section 5.13 shall be consistent for each pass in a weld joint, and shall in no case vary by more than ±10 percent for travel speed, ±10 percent for amperage, and ±7 percent for voltage as measured from a predetermined target value or average within each weld pass or zone. The travel speed shall in no case vary by more than ±15 percent when using submerged arc welding.
D. For a WPS qualified in conformance with AWS D1.5 Section 5.13, the values to be used for calculating ranges for current and voltage shall be based on the average of all weld passes made in the test. Heat input shall be calculated using the average of current and voltage of all weld passes made in the test for a WPS qualified in conformance with Section 5.12 or 5.13.
E. Macroetch tests are required for WPS qualification tests, and acceptance shall be per AWS D1.5 Section 5.19.3.
F. When a nonstandard weld joint is to be made using a combination of WPSs, a test conforming to Figure 5.3 may be conducted combining the WPSs to be used in

CONTRACT NO. 04-0120R4
CONTRACT CHANGE ORDER NO 101
SHEET 8 OF 51

production, provided the essential variables, including weld bead placement, of each process are limited to those established in Table 5.3.

G. Prior to preparing mechanical test specimens, the PQR welds shall be inspected by visual and radiographic tests. Backing bar shall be 75 mm in width and shall remain in place during NDT testing. Results of the visual and radiographic tests shall comply with AWS D1.5 Section 6.26.2, excluding Section 6.26.2.2. Test plates that do not comply with both tests shall not be used.

WELDING QUALITY CONTROL

Welding quality control shall conform to the requirements in the AWS or other specified welding codes, the Standard Specifications, and these special provisions.

Unless otherwise specified, welding quality control shall apply when any work is welded in conformance with the provisions in Section 49, "Piling," Section 52, "Reinforcement," Section 55, "Steel Structures," or Section 75-1.035, "Bridge Joint Restrainer Units," of the Standard Specifications.

All welding will require inspection by the Engineer. The Contractor shall request inspection at least 3 working days prior to the beginning of welding for locations within California and 5 working days for locations outside of California. The Contractor shall request inspection at:

http://www.dot.ca.gov/hq/esc/Translab/smbforms.htm

Continuous inspection shall be provided when any welding is being performed. Continuous inspection, as a minimum, shall include having a QC Inspector within such close proximity of all welders or welding operators so that inspections by the QC Inspector of each welding operation at each welding location does not lapse for a period exceeding 30 minutes.

When joint weld details that are not prequalified to the details of Section 3 of AWS D1.1 or to the details of Figure 2.4 or 2.5 of AWS D1.5 are proposed for use in the work, the joint details, their intended locations, and the proposed welding parameters and essential variables, shall be approved by the Engineer. The Contractor shall allow the Engineer 2 weeks to complete the review of the proposed joint detail locations. In the event the Engineer fails to complete the review within the time allowed, and if, in the opinion of the Engineer, completion of the work is delayed or interfered with by reason of the Engineer's delay in completing the review, the Contractor will be compensated for any resulting loss, and an extension of time will be granted, in the same manner as provided for in Section 8-1.09, "Right of Way Delays," of the Standard Specifications. Upon approval of the proposed joint detail locations and qualification of the proposed joint details, welders and welding operators using these details shall perform a qualification test plate using the WPS variables and the joint detail to be used in production. The test plate shall have the maximum thickness to be used in production and a minimum length of 460 mm. The test plate shall be mechanically and radiographically tested. Mechanical and radiographic testing and acceptance criteria shall be as specified in the applicable AWS codes.

The Engineer will witness all qualification tests for WPSs that were not previously approved by the Department. Unless otherwise specified, an approved independent third party will witness the qualification tests for welders or welding operators. The independent third party shall be a current CWI and shall not be an employee of the contractor performing the welding. The Contractor shall allow the Engineer 2 weeks to review the qualifications and copy of the current certification of the independent third party. In the event the Engineer fails to complete the review within the time allowed, and if, in the opinion of the Engineer, completion of the work is delayed or interfered with by reason of the Engineer's delay in completing the review, the Contractor will be compensated for any resulting loss, and an extension of time will be granted,

CONTRACT NO. ____
CONTRACT CHANGE ORDER NO 161
SHEET 9 OF 51

in the same manner as provided for in Section 8-1.09, "Right of Way Delays," of the Standard Specifications. The Contractor shall notify the Engineer one week prior to performing any qualification tests. Witnessing of qualification tests by the Engineer shall not constitute approval of the intended joint locations, welding parameters, or essential variables.

The Contractor shall designate in writing a welding Quality Control Manager (QCM). The QCM shall be responsible directly to the Contractor for the quality of welding, including materials and workmanship, performed by the Contractor and subcontractors.

The QCM shall be the sole individual responsible to the Contractor for submitting, receiving, reviewing, and approving all correspondence, required submittals, and reports to and from the Engineer. The QCM shall be a registered professional engineer or shall be currently certified as a CWI.

Unless the QCM is hired by a subcontractor providing only QC services, the QCM shall not be employed or compensated by any subcontractor, or by other persons or entities hired by subcontractors, who will provide other services or materials for the project. The QCM may be an employee of the Contractor.

Welding inspection personnel or NDT firms to be used in the work shall not be employed or compensated by any subcontractor, or by other persons or entities hired by subcontractors, who will provide other services or materials for the project, except for the following conditions:

A. The work is welded in conformance with AWS D1.5 and is performed at a permanent fabrication or manufacturing facility that is certified under the AISC Quality Certification Program, Category Cbr, Major Steel Bridges and Fracture Critical endorsement F, when applicable.
B. The welding is performed on pipe pile material at a permanent pipe manufacturing facility authorized to apply the American Petroleum Institute (API) monogram for API 5L pipe.

For welding performed at such facilities, the inspection personnel or NDT firms may be employed or compensated by the facility performing the welding provided the facility maintains a QC program that is independent from production.

Prior to submitting the Welding Quality Control Plan (WQCP) required herein, a prewelding meeting between the Engineer, the Contractor's QCM, and a representative from each entity performing welding or inspection for this project, shall be held to discuss the requirements for the WQCP.

The Contractor shall submit to the Engineer, in conformance with the provisions in Section 5-1.02, "Plans and Working Drawings," of the Standard Specifications, 2 copies of a separate WQCP for each subcontractor or supplier for each item of work for which welding is to be performed.

The Contractor shall allow the Engineer 2 weeks to review the WQCP submittal after a complete plan has been received. No welding shall be performed until the WQCP is approved in writing by the Engineer. In the event the Engineer fails to complete the review within the time allowed, and if, in the opinion of the Engineer, completion of the work is delayed or interfered with by reason of the Engineer's delay in completing the review, the Contractor will be compensated for any resulting loss, and an extension of time will be granted, in the same manner as provided for in Section 8-1.09, "Right of Way Delays," of the Standard Specifications.

An amended WQCP or any addendum to the approved WQCP shall be submitted to, and approved in writing by the Engineer, for proposed revisions to the approved WQCP. An amended WQCP or addendum will be required for revisions to the WQCP, including but not limited to a revised WPS; additional welders; changes in NDT firms, QC, or NDT personnel or

CONTRACT NO. 07 [illegible]
CONTRACT CHANGE ORDER NO 101
SHEET 10 OF 51

procedures; or updated systems for tracking and identifying welds. The Engineer shall have one week to complete the review of the amended WQCP or addendum. Work affected by the proposed revisions shall not be performed until the amended WQCP or addendum has been approved. In the event the Engineer fails to complete the review within the time allowed, and if, in the opinion of the Engineer, completion of the work is delayed or interfered with by reason of the Engineer's delay in completing the review, the Contractor will be compensated for any resulting loss, and an extension of time will be granted, in the same manner as provided for in Section 8-1.09, "Right of Way Delays," of the Standard Specifications.

Information regarding the contents, format, and organization of a WQCP, is available at the Transportation Laboratory and at:

http://www.dot.ca.gov/hq/esc/Translab/smbresources.htm

After final approval of the WQCP, amended WQCP, or addendum, the Contractor shall submit 7 copies to the Engineer of the approved documents. A copy of the Engineer approved document shall be available at each location where welding is to be performed.

A daily production log for welding shall be kept for each day that welding is performed. The log shall clearly indicate the locations of all welding. The log shall include the welders' names, amount of welding performed, any problems or deficiencies discovered, and any testing or repair work performed, at each location. The daily report from each QC Inspector shall also be included in the log.

The following items shall be included in a Welding Report that is to be submitted to the Engineer within 2 weeks following the performance of any welding:

A. A daily production log.
B. Reports of all visual weld inspections and NDT.
C. Radiographs and radiographic reports, and other required NDT reports.
D. A summary of welding and NDT activities that occurred during the reporting period.
E. Reports of each application of heat straightening.
F. A summarized log listing the rejected lengths of weld by welder, position, process, joint configuration, and piece number.
G. Documentation that the Contractor has evaluated all radiographs and other nondestructive tests and corrected all rejectable deficiencies, and that all repaired welds have been reexamined using the required NDT and found acceptable.

The following information shall be clearly written on the outside of radiographic envelopes: name of the QCM, name of the nondestructive testing firm, name of the radiographer, date, contract number, complete part description, and all included weld numbers, report numbers, and station markers or views, as detailed in the WQCP. In addition, all interleaves shall have clearly written on them the part description and all included weld numbers and station markers or views, as detailed in the WQCP. A maximum of 2 pieces of film shall be used for each interleave.

Reports of all visual inspections and NDT shall be signed by the inspector or technician and submitted daily to the QCM for review and signature prior to submittal to the Engineer. Corresponding names shall be clearly printed or typewritten next to all signatures. Reports of all NDT, whether specified, additional, or informational, performed by the Contractor shall be submitted to the Engineer.

The Engineer will review the Welding Report to determine if the Contractor is in conformance with the WQCP. Unless otherwise specified, the Engineer shall be allowed 2 weeks to review the report and respond in writing after the complete Welding Report has been

CONTRACT NO. 04 [illegible]
CONTRACT CHANGE ORDER NO 101
SHEET 11 OF 51

received. Prior to receiving notification from the Engineer of the Contractor's conformance with the WQCP, the Contractor may encase in concrete or cover welds for which the Welding Report has been submitted. However, should the Contractor elect to encase or cover those welds prior to receiving notification from the Engineer, it is expressly understood that the Contractor shall not be relieved of the responsibility for incorporating material in the work that conforms to the requirements of the plans and specifications. Material not conforming to these requirements will be subject to rejection. Should the Contractor elect to wait to encase or cover welds pending notification by the Engineer, and in the event the Engineer fails to complete the review within the time allowed, and if, in the opinion of the Engineer, completion of the work is delayed or interfered with by reason of the Engineer's delay in completing the review, the Contractor will be compensated for any resulting loss, and an extension of time will be granted, in the same manner as provided for in Section 8-1.09, "Right of Way Delays," of the Standard Specifications.

In addition to the requirements in AWS D1.1 and AWS D1.5, second-time excavations of welds or base metal to repair unacceptable discontinuities, regardless of NDT method, and all repairs of cracks require prior approval of the Engineer.

The Engineer shall be notified immediately in writing when welding problems, deficiencies, base metal repairs, or any other type of repairs not submitted in the WQCP are discovered, and also of the proposed repair procedures to correct them. For requests to perform second-time repairs or repairs of cracks, the Contractor shall include an engineering evaluation of the proposed repair. The engineering evaluation, at a minimum, shall address the following:

A. What is causing each defect?
B. Why the repair will not degrade the material properties?
C. What steps are being taken to prevent similar defects from happening again?

The Contractor shall allow the Engineer one week to review these procedures. No remedial work shall begin until the repair procedures are approved in writing by the Engineer. In the event the Engineer fails to complete the review within the time allowed, and if, in the opinion of the Engineer, completion of the work is delayed or interfered with by reason of the Engineer's delay in completing the review, the Contractor will be compensated for any resulting loss, and an extension of time will be granted, in the same manner as provided for in Section 8-1.09, "Right of Way Delays," of the Standard Specifications.

The QCM shall sign and furnish to the Engineer, a Certificate of Compliance in conformance with the provisions in Section 6-1.07, "Certificates of Compliance," of the Standard Specifications for each item of work for which welding was performed. The certificate shall state that all of the materials and workmanship incorporated in the work, and all required tests and inspections of this work, have been performed in conformance with the details shown on the plans, the Standard Specifications, and these special provisions.

CONTRACT NO. 07-[illegible]
CONTRACT CHANGE ORDER NO 101
SHEET 12 OF 51

10-1.__ EXISTING HIGHWAY FACILITIES

The work performed in connection with various existing highway facilities shall conform to the provisions in Section 15, "Existing Highway Facilities," of the Standard Specifications and these special provisions.

CONTRACT NO. 04-012024

CONTRACT CHANGE ORDER NO 101

SHEET 13 OF 51

BRIDGE REMOVAL (PORTION)

Removing bridges or portions of bridges shall conform to the provisions in Section 15-4, "Bridge Removal," of the Standard Specifications and these special provisions.

Bridge removal (portion) consists of removing portions of bridge and retaining wall including barrier and sidewalk and pavement and subbase materials as shown on the plans.

Removed materials that are not to be salvaged or used in the reconstruction shall become the property of the Contractor and shall be disposed of in conformance with the provisions in Section 7-1.13, "Disposal of Material Outside the Highway Right of Way," of the Standard Specifications.

The Contractor shall submit a complete bridge removal plan to the Engineer for each bridge listed above, detailing procedures, sequences, and all features required to perform the removal in a safe and controlled manner.

The bridge removal plan shall include, but not be limited to the following:

A. The removal sequence, including staging of removal operations.
B. Equipment locations on the structure during removal operations.
C. Temporary support shoring or temporary bracing.
D. Locations where work is to be performed over traffic, utilities, or railroad property.
E. Details, locations, and types of protective covers to be used.
F. Measures to assure that people, property, utilities, and improvements will not be endangered.
G. Details and measures for preventing material, equipment, and debris from falling onto public traffic, or railroad property.

The bridge removal plan shall conform to the provisions in Section 5-1.02, "Plans and Working Drawings," of the Standard Specifications. The number of sets of drawings, design calculations, and the time for reviewing bridge removal plans shall be the same as specified for falsework working drawings in Section 51-1.06A, "Falsework Design and Drawings," of the Standard Specifications.

CONTRACT NO. _____
CONTRACT CHANGE ORDER NO 161
SHEET 14 OF 51

10-1.__ EARTHWORK

Earthwork shall conform to the provisions in Section 19, "Earthwork," of the Standard Specifications and these special provisions.

CONTRACT NO. 04-0120K4
CONTRACT CHANGE ORDER NO 101
SHEET 15 OF 51

10-1.__ PILING

GENERAL

Piling shall conform to the provisions in Section 49, "Piling," of the Standard Specifications, and these special provisions.

Unless otherwise specified, welding of any work performed in conformance with the provisions in Section 49, "Piling," of the Standard Specifications, shall be in conformance with the requirements in AWS D1.1.

Foundation recommendations are included in the "Information Handout" available to the Contractor as provided for in Section 2-1.03, "Examination of Plans, Specifications, Contract, and Site of Work," of the Standard Specifications.

Attention is directed to "Welding" of these special provisions.

Difficult pile installation is anticipated due to the presence of weathered, fractured and decomposed bedrock, caving subsurface material , high ground water, , subsurface man-made debris and obstructions, the requirements of pile embedment into rock and the presence of adjacent structure foundations.

CAST-IN-DRILLED-HOLE CONCRETE PILES

Cast-in-drilled-hole concrete piling shall conform to the provisions in Section 49-4, "Cast-In-Place Concrete Piles," of the Standard Specifications and these special provisions.

The provisions of "Welding" of these special provisions shall not apply to temporary steel casings.

Cast-in-drilled-hole concrete piles 600 mm in diameter or larger may be constructed by excavation and depositing concrete under slurry.

Materials

Concrete deposited under slurry shall have a nominal penetration equal to or greater than 90 mm. Concrete shall be proportioned to prevent excessive bleed water and segregation.

Concrete deposited under slurry shall contain not less than 400 kg of cementitious material per cubic meter.

The combined aggregate grading used in concrete for cast-in-drilled-hole concrete piling shall be either the 25-mm maximum grading, the 12.5-mm maximum grading, or the 9.5-mm maximum grading and shall conform to the requirements in Section 90-3 "Aggregate Gradings," of the Standard Specifications.

Mineral Slurry

Mineral slurry shall be mixed and thoroughly hydrated in slurry tanks, and slurry shall be sampled from the slurry tanks and tested before placement in the drilled hole.

Slurry shall be recirculated or continuously agitated in the drilled hole to maintain the specified properties.

Recirculation shall include removal of drill cuttings from the slurry before discharging the slurry back into the drilled hole. When recirculation is used, the slurry shall be sampled and tested at least every 2 hours after beginning its use until tests show that the samples taken from the slurry tank and from near the bottom of the hole have consistent specified properties. Subsequently, slurry shall be sampled at least twice per shift as long as the specified properties remain consistent.

Slurry that is not recirculated in the drilled hole shall be sampled and tested at least every 2 hours after beginning its use. The slurry shall be sampled mid-height and near the bottom of

CONTRACT CHANGE ORDER NO 101
SHEET 16 OF 51

the hole. Slurry shall be recirculated when tests show that the samples taken from mid-height and near the bottom of the hole do not have consistent specified properties.

Slurry shall also be sampled and tested prior to final cleaning of the bottom of the hole and again just prior to placing concrete. Samples shall be taken from mid-height and near the bottom of the hole. Cleaning of the bottom of the hole and placement of the concrete shall not start until tests show that the samples taken from mid-height and near the bottom of the hole have consistent specified properties.

Mineral slurry shall be tested for conformance to the requirements shown in the following table:

MINERAL SLURRY		
PROPERTY	REQUIREMENT	TEST
Density (kg/m^3) - before placement in the drilled hole - during drilling - prior to final cleaning - immediately prior to placing concrete	1030* to 1110* 1030* to 1200*	Mud Weight (Density) API 13B-1 Section 1
Viscosity (seconds/liter) bentonite attapulgite	29 to 53 29 to 42	Marsh Funnel and Cup API 13B-1 Section 2.2
pH	8 to 10.5	Glass Electrode pH Meter or pH Paper
Sand Content (percent) - prior to final cleaning - immediately prior to placing concrete	less than or equal to 4.0	Sand API 13B-1 Section 5
*When approved by the Engineer, slurry may be used in salt water, and the allowable densities may be increased up to 32 kg/m^3. Slurry temperature shall be at least 4°C when tested.		

Any caked slurry on the sides or bottom of hole shall be removed before placing reinforcement. If concrete is not placed immediately after placing reinforcement, the reinforcement shall be removed and cleaned of slurry, the sides of the drilled hole cleaned of caked slurry, and the reinforcement again placed in the hole for concrete placement.

CONTRACT NO. 04-0120R4
CONTRACT CHANGE ORDER NO 101
SHEET 17 OF 51

CONTRACT NO. 04-012824
CONTRACT CHANGE ORDER NO 101
SHEET 18 OF 51

Synthetic Slurry

Synthetic slurries shall be used in conformance with the manufacturer's recommendations and these special provisions. The following synthetic slurries may be used:

PRODUCT	MANUFACTURER
SlurryPro CDP	KB Technologies Ltd. 3648 FM 1960 West Suite 107 Houston, TX 77068 (800) 525-5237
Super Mud	PDS Company c/o Champion Equipment Company 8140 East Rosecrans Ave. Paramount, CA 90723 (562) 634-8180
Shore Pac GCV	CETCO Drilling Products Group 1350 West Shure Drive Arlington Heights, IL 60004 (847) 392-5800
Novagel Polymer	Geo-Tech Drilling Fluids 220 N. Zapata Hwy, Suite 11A Laredo, TX 78043 (210) 587-4758

Inclusion of a synthetic slurry on the above list may be obtained by meeting the Department's requirements for synthetic slurries. The requirements can be obtained from the Office of Structure Design, P.O. Box 942874, Sacramento, CA 94274-0001.

Synthetic slurries listed may not be appropriate for a given site.

Synthetic slurries shall not be used in holes drilled in primarily soft or very soft cohesive soils as determined by the Engineer.

A manufacturer's representative, as approved by the Engineer, shall provide technical assistance for the use of their product, shall be at the site prior to introduction of the synthetic slurry into a drilled hole, and shall remain at the site until released by the Engineer.

Synthetic slurries shall be sampled and tested at both mid-height and near the bottom of the drilled hole. Samples shall be taken and tested during drilling as necessary to verify the control of the properties of the slurry. Samples shall be taken and tested when drilling is complete, but prior to final cleaning of the bottom of the hole. When samples are in conformance with the requirements shown in the following tables for each slurry product, the bottom of the hole shall be cleaned and any loose or settled material removed. Samples shall be obtained and tested after final cleaning and immediately prior to placing concrete.

SlurryPro CDP synthetic slurries shall be tested for conformance to the requirements shown in the following table:

SLURRYPRO CDP KB Technologies Ltd.		
PROPERTY	REQUIREMENT	TEST
Density (kg/m^3) - during drilling - prior to final cleaning - just prior to placing concrete	 less than or equal to 1075* less than or equal to 1025*	Mud Weight (Density) API 13B-1 Section 1
Viscosity (seconds/liter) - during drilling -prior to final cleaning - just prior to placing concrete	 53 to 127 less than or equal to 74	Marsh Funnel and Cup API 13B-1 Section 2.2
pH	6 to 11.5	Glass Electrode pH Meter or pH Paper
Sand Content (percent) - prior to final cleaning - just prior to placing concrete	 less than or equal to 0.5	Sand API 13B-1 Section 5
*When approved by the Engineer, slurry may be used in salt water, and the allowable densities may be increased up to 32 kg/m^3. Slurry temperature shall be at least 4°C when tested.		

CONTRACT NO. 04-612824
CONTRACT CHANGE ORDER NO 161
SHEET 19 OF 51

Super Mud synthetic slurries shall be tested for conformance to the requirements shown in the following table:

SUPER MUD PDS Company		
PROPERTY	REQUIREMENT	TEST
Density (kg/m^3) - prior to final cleaning - just prior to placing concrete	less than or equal to 1025*	Mud Weight (Density) API 13B-1 Section 1
Viscosity (seconds/liter) - during drilling - prior to final cleaning - just prior to placing concrete	34 to 64 less than or equal to 64	Marsh Funnel and Cup API 13B-1 Section 2.2
pH	8 to 10.0	Glass Electrode pH Meter or pH Paper
Sand Content (percent) - prior to final cleaning -just prior to placing concrete	less than or equal to 0.5	Sand API 13B-1 Section 5
*When approved by the Engineer, slurry may be used in salt water, and the allowable densities may be increased up to 32 kg/m^3. Slurry temperature shall be at least 4°C when tested.		

CONTRACT NO. 04-012047

CONTRACT CHANGE ORDER NO 101

SHEET 20 OF 51

Shore Pac GCV synthetic slurries shall be tested for conformance to the requirements shown in the following table:

Shore Pac GCV CETCO Drilling Products Group		
PROPERTY	REQUIREMENT	TEST
Density (kg/m^3) - prior to final cleaning - just prior to placing concrete	less than or equal to 1025*	Mud Weight (Density) API 13B-1 Section 1
Viscosity (seconds/liter) - during drilling - prior to final cleaning - just prior to placing concrete	35 to 78 less than or equal to 60	Marsh Funnel and Cup API 13B-1 Section 2.2
pH	8.0 to 11.0	Glass Electrode pH Meter or pH Paper
Sand Content (percent) - prior to final cleaning -just prior to placing concrete	less than or equal to 0.5	Sand API 13B-1 Section 5
*When approved by the Engineer, slurry may be used in salt water, and the allowable densities may be increased up to 32 kg/m^3. Slurry temperature shall be at least 4°C when tested.		

CONTRACT NO. 04-012024

CONTRACT CHANGE ORDER NO 101

SHEET 21 OF 51

Novagel Polymer synthetic slurries shall be tested for conformance to the requirements shown in the following table:

NOVAGEL POLYMER Geo-Tech Drilling Fluids		
PROPERTY	REQUIREMENT	TEST
Density (kg/m^3) - during drilling - prior to final cleaning - just prior to placing concrete	 less than or equal to 1075* less than or equal to 1025*	Mud Weight (Density) API 13B-1 Section 1
Viscosity (seconds/liter) - during drilling - prior to final cleaning - just prior to placing concrete	 48 to 110 less than or equal to 110	Marsh Funnel and Cup API 13B-1 Section 2.2
pH	6.0 to 11.5	Glass Electrode pH Meter or pH Paper
Sand Content (percent) - prior to final cleaning -just prior to placing concrete	 less than or equal to 0.5	Sand API 13B-1 Section 5
*When approved by the Engineer, slurry may be used in salt water, and the allowable densities may be increased up to 32 kg/m^3. Slurry temperature shall be at least 4°C when tested.		

CONTRACT NO. 04-012014

CONTRACT CHANGE ORDER NO 101

SHEET 22 OF 51

CONTRACT NO. 01 01 [illegible]
CONTRACT CHANGE ORDER NO 101
SHEET 23 OF 51

Water Slurry

At the option of the Contractor, water may be used as slurry when casing is used for the entire length of the drilled hole.

Water slurry shall be tested for conformance to the requirements shown in the following table:

WATER SLURRY		
PROPERTY	REQUIREMENT	TEST
Density (kg/m^3) - prior to final cleaning - just prior to placing concrete	1017 *	Mud Weight (Density) API 13B-1 Section 1
Sand Content (percent) - prior to final cleaning -just prior to placing concrete	less than or equal to 0.5	Sand API 13B-1 Section 5
*When approved by the Engineer, salt water slurry may be used, and the allowable densities may be increased up to 32 kg/m^3.		

Construction

The Contractor shall submit a placing plan to the Engineer for approval prior to producing the test batch for cast-in-drilled-hole concrete piling and at least 10 working days prior to constructing piling. The plan shall include complete descriptions, details, and supporting calculations as listed below:

A. Requirements for all cast-in-drilled hole concrete piling:

1. Concrete mix design, certified test data, and trial batch reports.
2. Drilling or coring methods and equipment.
3. Proposed method for casing installation and removal when necessary.
4. Plan view drawing of pile showing reinforcement and inspection pipes, if required.
5. Methods for placing, positioning, and supporting bar reinforcement.
6. Methods and equipment for accurately determining the depth of concrete and actual and theoretical volume placed, including effects on volume of concrete when any casings are withdrawn.
7. Methods and equipment for verifying that the bottom of the drilled hole is clean prior to placing concrete.
8. Methods and equipment for preventing upward movement of reinforcement, including the Contractor's means of detecting and measuring upward movement during concrete placement operations.

B. Additional requirements when concrete is placed under slurry:

1. Concrete batching, delivery, and placing systems, including time schedules and capacities therefor. Time schedules shall include the time required for each concrete placing operation at each pile.

2. Concrete placing rate calculations. When requested by the Engineer, calculations shall be based on the initial pump pressures or static head on the concrete and losses throughout the placing system, including anticipated head of slurry and concrete to be displaced.
3. Suppliers' test reports on the physical and chemical properties of the slurry and any proposed slurry chemical additives, including Material Safety Data Sheet.
4. Slurry testing equipment and procedures.
5. Methods of removal and disposal of excavation, slurry, and contaminated concrete, including removal rates.
6. Methods and equipment for slurry agitating, recirculating, and cleaning.

In addition to compressive strength requirements, the consistency of the concrete to be deposited under slurry shall be verified before use by producing a test batch. The test batch shall be produced and delivered to the project under conditions and in time periods similar to those expected during the placement of concrete in the piles. Concrete for the test batch shall be placed in an excavated hole or suitable container of adequate size to allow for testing as specified herein. Depositing of test batch concrete under slurry will not be required. In addition to meeting the specified nominal penetration, the test batch shall meet the following requirements:

A. For piles where the time required for each concrete placing operation, as submitted in the placing plan, will be 2 hours or less, the test batch shall demonstrate that the proposed concrete mix design achieves either a penetration of at least 50 mm or a slump of at least 125 mm after twice that time has elapsed.
B. For piles where the time required for each concrete placing operation, as submitted in the placing plan, will be more than 2 hours, the test batch shall demonstrate that the proposed concrete mix design achieves either a penetration of at least 50 mm or a slump of at least 125 mm after that time plus 2 hours has elapsed.

The time period shall begin at the start of placement. The concrete shall not be vibrated or agitated during the test period. Penetration tests shall be performed in conformance with the requirements in California Test 533. Slump tests shall be performed in conformance with the requirements in ASTM Designation: C 143. Upon completion of testing, the concrete shall be disposed of in conformance with the provisions in Section 7-1.13, "Disposal of Material Outside the Highway Right of Way," of the Standard Specifications.

The concrete deposited under slurry shall be carefully placed in a compact, monolithic mass and by a method that will prevent washing of the concrete. Concrete deposited under slurry need not be vibrated. Placing concrete shall be a continuous operation lasting not more than the time required for each concrete placing operation at each pile, as submitted in the placing plan, unless otherwise approved in writing by the Engineer. The concrete shall be placed with concrete pumps and delivery tube system of adequate number and size to complete the placing of concrete in the time specified. The delivery tube system shall consist of one of the following:

A. A tremie tube or tubes, each of which are at least 250 mm in diameter, fed by one or more concrete pumps.
B. One or more concrete pump tubes, each fed by a single concrete pump.

The delivery tube system shall consist of watertight tubes with sufficient rigidity to keep the ends always in the mass of concrete placed. If only one delivery tube is utilized to place the concrete, the tube shall be placed near the center of the drilled hole. Multiple tubes shall be

CONTRACT CHANGE ORDER NO 101
SHEET 24 OF 51

CONTRACT NO. 01-012241
CONTRACT CHANGE ORDER NO 101
SHEET 25 OF 51

uniformly spaced in the hole. Internal bracing for the steel reinforcing cage shall accommodate the delivery tube system. Tremies shall not be used for piles without space for a 250-mm tube.

Spillage of concrete into the slurry during concrete placing operations shall not be allowed. Delivery tubes shall be capped with a watertight cap, or plugged above the slurry level with a good quality, tight fitting, moving plug that will expel the slurry from the tube as the tube is charged with concrete. The cap or plug shall be designed to be released as the tube is charged. The pump discharge or tremie tube shall extend to the bottom of the hole before charging the tube with concrete. After charging the delivery tube system with concrete, the flow of concrete through a tube shall be induced by slightly raising the discharge end. During concrete placement, the tip of the delivery tube shall be maintained as follows to prevent reentry of the slurry into the tube. Until at least 3 m of concrete has been placed, the tip of the delivery tube shall be within 150 mm of the bottom of the drilled hole, and then the embedment of the tip shall be maintained at least 3 m below the top surface of the concrete. Rapid raising or lowering of the delivery tube shall not be permitted. If the seal is lost or the delivery tube becomes plugged and must be removed, the tube shall be withdrawn, the tube cleaned, the tip of the tube capped to prevent entrance of the slurry, and the operation restarted by pushing the capped tube 3 m into the concrete and then reinitiating the flow of concrete.

When slurry is used, a fully operational standby concrete pump, adequate to complete the work in the time specified, shall be provided at the site during concrete placement. The slurry level shall be maintained within 300 mm of the top of the drilled hole.

A log of concrete placement for each drilled hole shall be maintained by the Contractor when concrete is deposited under slurry. The log shall show the pile location, tip elevation, dates of excavation and concrete placement, total quantity of concrete deposited, length and tip elevation of any casing, and details of any hole stabilization method and materials used. The log shall include a 215 mm x 280 mm sized graph of the concrete placed versus depth of hole filled. The graph shall be plotted continuously throughout placing of concrete. The depth of drilled hole filled shall be plotted vertically with the pile tip oriented at the bottom and the quantity of concrete shall be plotted horizontally. Readings shall be made at least at each 1.5 m of pile depth, and the time of the reading shall be indicated. The graph shall be labeled with the pile location, tip elevation, cutoff elevation, and the dates of excavation and concrete placement. The log shall be delivered to the Engineer within one working day of completion of placing concrete in the pile.

After placing reinforcement and prior to placing concrete in the drilled hole, if drill cuttings settle out of the slurry, the bottom of the drilled hole shall be cleaned. The Contractor shall verify that the bottom of the drilled hole is clean.

If temporary casing is used, concrete placed under slurry shall be maintained at a level at least 1.5 m above the bottom of the casing. The withdrawal of casings shall not cause contamination of the concrete with slurry.

Material resulting from using slurry shall be disposed of in conformance with the provisions in Section 7-1.13, "Disposal of Material Outside the Highway Right of Way," of the Standard Specifications.

Acceptance Testing and Mitigation

Vertical inspection pipes for acceptance testing shall be provided in all cast-in-drilled-hole concrete piles that are 600 mm in diameter or larger, except when the holes are dry or when the holes are dewatered without the use of temporary casing to control ground water.

Inspection pipes shall be Schedule 40 polyvinyl chloride pipes with a nominal inside diameter of 50 mm. Each inspection pipe shall be capped top and bottom and shall have

watertight couplers to provide a clean, dry and unobstructed 50-mm diameter clear opening from 1.0 m above the pile cutoff down to the bottom of the reinforcing cage.

Inspection pipes shall be placed around the pile, inside the outermost spiral or hoop reinforcement, and 75 mm clear of the vertical reinforcement, at a uniform spacing not exceeding 840 mm measured along the circle passing through the centers of inspection pipes. A minimum of 2 inspection pipes per pile shall be used. When the vertical reinforcement is not bundled and each bar is not more than 26 mm in diameter, inspection pipes may be placed 50 mm clear of the vertical reinforcement. The inspection pipes shall be placed to provide the maximum diameter circle that passes through the centers of the inspection pipes while maintaining the clear spacing required herein. The pipes shall be installed in straight alignment, parallel to the main reinforcement, and securely fastened in place to prevent misalignment during installation of the reinforcement and placing of concrete in the hole.

The Contractor shall log the location of the inspection pipe couplers with respect to the plane of pile cut off, and these logs shall be delivered to the Engineer upon completion of the placement of concrete in the drilled hole.

After placing concrete and before requesting acceptance tests, each inspection pipe shall be tested by the Contractor in the presence of the Engineer by passing a 48.3-mm diameter rigid cylinder 610 mm long through the complete length of pipe. If the 48.3-mm diameter rigid cylinder fails to pass any of the inspection pipes, the Contractor shall attempt to pass a 32.0-mm diameter rigid cylinder 1.375 m long through the complete length of those pipes in the presence of the Engineer. If an inspection pipe fails to pass the 32.0-mm diameter cylinder, the Contractor shall immediately fill all inspection pipes in the pile with water.

The Contractor shall replace each inspection pipe that does not pass the 32.0-mm diameter cylinder with a 50.8-mm diameter hole cored through the concrete for the entire length of the pile. Cored holes shall be located as close as possible to the inspection pipes they are replacing and shall be no more than 150 mm inside the reinforcement. Coring shall not damage the pile reinforcement. Cored holes shall be made with a double wall core barrel system utilizing a split tube type inner barrel. Coring with a solid type inner barrel will not be allowed. Coring methods and equipment shall provide intact cores for the entire length of the pile concrete. The coring operation shall be logged by an Engineering Geologist or Civil Engineer licensed in the State of California and experienced in core logging. Coring logs shall include complete descriptions of inclusions and voids encountered during coring, and shall be delivered to the Engineer upon completion. Concrete cores shall be preserved, identified with the exact location the core was recovered from within the pile, and made available for inspection by the Engineer.

Acceptance tests of the concrete will be made by the Engineer, without cost to the Contractor. Acceptance tests will evaluate the homogeneity of the placed concrete. Tests will include gamma-gamma logging. Tests may also include crosshole sonic logging and other means of inspection selected by the Engineer. The Contractor shall not conduct operations within 8.0 m of the gamma-gamma logging operations. The Contractor shall separate reinforcing steel as necessary to allow the Engineer access to the inspection pipes to perform gamma-gamma logging or other acceptance testing. After requesting acceptance tests and providing access to the piling, the Contractor shall allow 3 weeks for the Engineer to conduct these tests and make determination of acceptance if the 48.3-mm diameter cylinder passed all inspection pipes, and 4 weeks if only the 32.0-mm diameter cylinder passed all inspection pipes. Should the Engineer fail to complete these tests within the time allowance, and if in the opinion of the Engineer, the Contractor's controlling operation is delayed or interfered with by reason of the delay in inspection, the delay will be considered a right of way delay as specified in Section 8-1.09, "Right of Way Delays," of the Standard Specifications.

All inspection pipes and cored holes in a pile shall be dewatered and filled with grout after notification by the Engineer that the pile is acceptable. Placement and removal of water in the inspection pipes shall be at the Contractor's expense. Grout shall conform to the provisions in Section 50-1.09, "Bonding and Grouting," of the Standard Specifications. The inspection pipes and holes shall be filled using grout tubes that extend to the bottom of the pipe or hole or into the grout already placed.

If acceptance testing performed by the Engineer determines that a pile does not meet the requirements of the specifications, then that pile will be rejected and all depositing of concrete under slurry or concrete placed using temporary casing for the purpose of controlling groundwater shall be suspended until written changes to the methods of pile construction are approved in writing by the Engineer.

The Contractor shall submit to the Engineer for approval a mitigation plan for repair, supplementation, or replacement for each rejected cast-in-drilled-hole concrete pile, and this plan shall conform to the provisions in Section 5-1.02, "Plans and Working Drawings," of the Standard Specifications. Prior to submitting this mitigation plan, the Engineer will hold a repair feasibility meeting with the Contractor to discuss the feasibility of repairing rejected piling. The Engineer will consider the size of the defect, the location of the defect, and the design information and corrosion protection considerations for the pile. This information will be made available to the Contractor, if appropriate, for the development of the mitigation plan. If the Engineer determines that it is not feasible to repair the rejected pile, the Contractor shall not include repair as a means of mitigation and shall proceed with the submittal of a mitigation plan for replacement or supplementation of the rejected pile.

If the Engineer determines that a rejected pile does not require mitigation due to structural, geotechnical, or corrosion concerns, the Contractor may elect to 1) repair the pile per the approved mitigation plan, or 2) not repair anomalies found during acceptance testing of that pile. For such unrepaired piles, the Contractor shall pay to the State, $400 per cubic meter for the portion of the pile affected by the anomalies. The volume, in cubic meters, of the portion of the pile affected by the anomalies, shall be calculated as the area of the cross-section of the pile affected by each anomaly, in square meters, as determined by the Engineer, multiplied by the distance, in meters, from the top of each anomaly to the specified tip of the pile. If the volume calculated for one anomaly overlaps the volume calculated for additional anomalies within the pile, the calculated volume for the overlap shall only be counted once. In no case shall the amount of the payment to the State for any such pile be less than $400. The Department may deduct the amount from any moneys due, or that may become due the Contractor under the contract.

Pile mitigation plans shall include the following:

A. The designation and location of the pile addressed by the mitigation plan.
B. A review of the structural, geotechnical, and corrosion design requirements of the rejected pile.
C. A step by step description of the mitigation work to be performed, including drawings if necessary.
D. An assessment of how the proposed mitigation work will address the structural, geotechnical, and corrosion design requirements of the rejected pile.
E. Methods for preservation or restoration of existing earthen materials.
F. A list of affected facilities, if any, with methods and equipment for protection of these facilities during mitigation.

G. The State assigned contract number, bridge number, full name of the structure as shown on the contract plans, District-County-Route-Kilometer Post, and the Contractor's (and Subcontractor's if applicable) name on each sheet.
H. A list of materials, with quantity estimates, and personnel, with qualifications, to be used to perform the mitigation work.
I. The seal and signature of an engineer who is licensed as a Civil Engineer by the State of California.

For rejected piles to be repaired, the Contractor shall submit a pile mitigation plan that contains the following additional information:

A. An assessment of the nature and size of the anomalies in the rejected pile.
B. Provisions for access for additional pile testing if required by the Engineer.

For rejected piles to be replaced or supplemented, the Contractor shall submit a pile mitigation plan that contains the following additional information:

A. The proposed location and size of additional piling.
B. Structural details and calculations for any modification to the structure to accommodate the replacement or supplemental piling.

All provisions for cast-in-drilled-hole concrete piling shall apply to replacement piling.

The Contractor shall allow the Engineer 3 weeks to review the mitigation plan after a complete submittal has been received.

Should the Engineer fail to review the complete pile mitigation submittal within the time specified, and if, in the opinion of the Engineer, the Contractor's controlling operation is delayed or interfered with by reason of the delay in reviewing the pile mitigation plan, an extension of time commensurate with the delay in completion of the work thus caused will be granted in conformance with the provisions in Section 8-1.09, "Right of Way Delays," of the Standard Specifications.

When repairs are performed, the Contractor shall submit a mitigation report to the Engineer within 10 days of completion of the repair. This report shall state exactly what repair work was performed and quantify the success of the repairs relative to the submitted mitigation plan. The mitigation report shall be stamped and signed by an engineer that is licensed as a Civil Engineer by the State of California. The mitigation report shall show the State assigned contract number, bridge number, full name of the structure as shown on the contract plans, District-County-Route-Kilometer Post, and the Contractor (and Subcontractor if applicable) name on each sheet. The Engineer will be the sole judge as to whether a mitigation proposal is acceptable, the mitigation efforts are successful, and to whether additional repairs, removal and replacement, or construction of a supplemental foundation is required.

MEASUREMENT AND PAYMENT (PILING)

Measurement and payment for the various types and classes of piles shall conform to the provisions in Sections 49-6.01, "Measurement," and 49-6.02, "Payment," of the Standard Specifications and these special provisions.

Payment for cast-in-place concrete piling shall conform to the provisions in Section 49-6.02, "Payment," of the Standard Specifications and these special provisions except that, when the diameter of cast-in-place concrete piling is shown on the plans as 600 mm or larger, reinforcement in the piling will be paid for by the kilogram as bar reinforcing steel (bridge).

CONTRACT CHANGE ORDER NO 101
SHEET 28 OF 51

Full compensation for slurry, depositing concrete under slurry, test batches, inspection pipes, filling inspection holes and pipes with grout, filling cave-ins with concrete, and redrilling through concrete, shall be considered as included in the contract prices paid per meter for cast-in-drilled-hole concrete piling of the types and sizes listed in the Engineer's Estimate, and no additional compensation will be allowed therefor.

CONTRACT NO. 04-012824

CONTRACT CHANGE ORDER NO 101

SHEET 29 OF 51

10-1.__ CONCRETE STRUCTURES

Portland cement concrete structures shall conform to the provisions in Section 51, "Concrete Structures," of the Standard Specifications and these special provisions.

GENERAL

Shotcrete shall not be used as an alternative construction method for reinforced concrete members unless otherwise specified.

When a roughened concrete surface is shown on the plans, the existing concrete surface shall be roughened to a full amplitude of approximately 6 mm by abrasive blasting, water blasting, or mechanical equipment.

Existing concrete surfaces to receive elastomeric bearing shall be clean, smooth and free of protrusions.

DECK CRACK TREATMENT

When methacrylate resin work is to be conducted within 31 meters of a residence, business, or public space, including sidewalks under a structure, the Contractor shall notify the public at least 7 days before starting work and monitor airborne emissions during the work. Public notification and monitoring of airborne emissions shall conform to the following:

A. The public safety plan required in Section 51-1.17A, "Deck Crack Treatment," of the Standard Specifications shall include a copy of the notification letter and a list of addresses and locations where the letter will be delivered and posted. The letter shall state the methacrylate resin work locations, dates, times, and what to expect. The letter shall be delivered to each residence and each business within 31 meters of the methacrylate resin work. The letter shall be delivered to local fire and police responders, and it shall be posted at the job site.

B. The public safety plan shall include an airborne emissions monitoring plan prepared by a certified industrial hygienist and a copy of the hygienist's certification. Airborne emissions shall be monitored at a minimum of 4 points including the point of mixing, the point of application, and the point of nearest public contact, as determined by the Engineer. At the completion of methacrylate resin work, a report by the certified industrial hygienist with results of the airborne emissions monitoring plan shall be submitted to the Engineer.

CONTRACT NO. 07-[illegible]
CONTRACT CHANGE ORDER NO 101
SHEET 30 OF 51

FALSEWORK

Falsework shall conform to the provisions in Section 51, "Concrete Structures," of the Standard Specifications and these special provisions.

The Contractor's engineer who signs the falsework drawings shall also certify in writing that the falsework is constructed in conformance with the approved drawings and the contract specifications prior to placing concrete. This certification shall include performing any testing necessary to verify the ability of the falsework members to sustain the stresses required by the falsework design. The engineer who signs the drawings may designate a representative to perform this certification. Where falsework contains openings for railroads, vehicular traffic, or pedestrians, the designated representative shall be qualified to perform this work, shall have at least three years of combined experience in falsework design or supervising falsework construction, and shall be registered as a Civil Engineer in the State of California. For other falsework, the designated representative shall be qualified to perform this work and shall have at least three years of combined experience in falsework design or supervising falsework construction. The Contractor shall certify the experience of the designated representative in writing and provide supporting documentation demonstrating the required experience if requested by the Engineer.

Welding and Nondestructive Testing

Welding of steel members, except for previously welded splices and except for when fillet welds are used where load demands are less than or equal to 175 N/mm for each 3 mm of fillet weld, shall conform to AWS D1.1 or other recognized welding standard. The welding standard to be utilized shall be specified by the Contractor on the working drawings. Previously welded splices for falsework members are defined as splices made prior to the member being shipped to the project site.

Splices made by field welding of steel beams at the project site shall undergo nondestructive testing (NDT). At the option of the Contractor, either ultrasonic testing (UT) or radiographic testing (RT) shall be used as the method of NDT for each field weld and any repair made to a previously welded splice in a steel beam. Testing shall be performed at locations selected by the Contractor. The length of a splice weld where NDT is to be performed, shall be a cumulative weld length equal to 25 percent of the original splice weld length. The cover pass shall be ground smooth at the locations to be tested. The acceptance criteria shall conform to the requirements of AWS D1.1, Section 6, for cyclically loaded nontubular connections subject to tensile stress. If repairs are required in a portion of the weld, additional NDT shall be performed on the repaired sections. The NDT method chosen shall be used for an entire splice evaluation including any required repairs.

For all field welded splices, the Contractor shall furnish to the Engineer a letter of certification which certifies that all welding and NDT, including visual inspection, are in conformance with the specifications and the welding standard shown on the approved working drawings. This letter of certification shall be signed by an engineer who is registered as a Civil Engineer in the State of California and shall be provided prior to placing any concrete for which the falsework is being erected to support.

For previously welded splices, the Contractor shall determine and perform all necessary testing and inspection required to certify the ability of the falsework members to sustain the stresses required by the falsework design. This welding certification shall (1) itemize the testing and inspection methods used, (2) include the tracking and identifying documents for previously

CONTRACT NO. 01 DIS 17
CONTRACT CHANGE ORDER NO 101
SHEET 31 OF 51

welded members, (3) be signed by an engineer who is registered as a Civil Engineer in the State of California, (4) and shall be provided prior to erecting the members.

CONTRACT NO. 04-012024

CONTRACT CHANGE ORDER NO 101

SHEET 32 OF 51

ELASTOMERIC BEARING PADS

Elastomeric bearing pads shall conform to the provisions in Section 51-1.12H, "Elastomeric Bearing Pads," of the Standard Specifications and these special provisions.

MEASUREMENT AND PAYMENT

Measurement and payment for concrete in structures shall conform to the provisions in Section 51-1.22, "Measurement," and Section 51-1.23, "Payment," of the Standard Specifications and these special provisions.

Full compensation for roughening existing concrete surfaces to a full amplitude of approximately 6 mm and cleaning and preparing existing concrete surfaces, where shown on the plans, shall be considered as included in the contract price paid per cubic meter for structural concrete, bridge and no separate payment will be made therefor.

10-1.__ DRILL AND BOND DOWELS

Drilling and bonding dowels shall conform to the details shown on the plans, the provisions in Section 83-2.02D(1), "General," of the Standard Specifications, and these special provisions.

Dowels shall conform to the provisions for bar reinforcement in "Reinforcement" of these special provisions.

If reinforcement is encountered during drilling before the specified depth is attained, the Engineer shall be notified. Unless the Engineer approves coring through the reinforcement, the hole will be rejected and a new hole, in which reinforcement is not encountered, shall be drilled adjacent to the rejected hole to the depth shown on the plans.

Unless otherwise provided, dowels to be bonded into drilled holes will be paid for as bar reinforcing steel (bridge).

Unless otherwise provided, drilling and bonding dowels will be measured and paid for by the meter determined by the number and the required depth of holes as shown on the plans or as ordered by the Engineer.

The contract price paid per meter for drill and bond dowel shall include full compensation for furnishing all labor, materials (except reinforcing steel dowels), tools, equipment, and incidentals, and for doing all the work involved in drilling the holes, including coring through reinforcement when approved by the Engineer, and bonding the dowels, complete in place, as shown on the plans, as specified in the Standard Specifications and these special provisions, and as directed by the Engineer.

10-1.__ SEALING JOINTS

Joints in concrete bridge decks and joints between concrete structures and concrete approach slabs must be sealed in conformance with the details shown on the plans, the provisions in Section 51, "Concrete Structures," of the Standard Specifications, and these special provisions.

When ordered by the Engineer, a joint seal larger than called for by the Movement Rating shown on the plans must be furnished and installed. Payment to the Contractor for furnishing the larger seal and for saw cutting the increment of additional depth of groove required will be determined as provided in Section 4-1.03, "Changes," of the Standard Specifications.

CONTRACT NO. 04-0J2814
CONTRACT CHANGE ORDER NO 101
SHEET 33 OF 51

CONTRACT NO. CONTRACT CHANGE ORDER NO 101
SHEET 24 OF 51

10-1.__ ASPHALT CONCRETE OVERLAY

Asphalt concrete shall be Type B and shall conform to the provisions in Section 39, "Asphalt Concrete," of the Standard Specifications and these special provisions.

The aggregate for Type B asphalt concrete shall conform to the 19 mm Maximum, Coarse grading specified in Section 39-2.02, "Aggregate," of the Standard Specifications.

The asphalt content of the asphalt mixture will be determined in conformance with the requirements in California Test 379, or in conformance with the requirements in California Test 382.

Paint binder (tack coat) shall be applied to existing surfaces to be surfaced and between layers of asphalt concrete, except when eliminated by the Engineer.

Paint binder (tack coat) shall be applied in the liter per square meter range limits specified for the surfaces to receive asphalt concrete in the tables below. The exact application rate within the range will be determined by the Engineer.

Full compensation for asphalt concrete shall be considered as included in the Contract Change Order agreed lump sump price and no separate payment will be made therefor.

10-1.__ REINFORCEMENT

Reinforcement shall conform to the provisions in Section 52, "Reinforcement," of the Standard Specifications and these special provisions.

The Department's mechanical splices prequalified list can be found at the following internet site:

http://www.dot.ca.gov/hq/esc/approved_products_list/

The provisions of "Welding Quality Control" of these special provisions shall not apply to resistance butt welding.

CONTRACT CHANGE ORDER NO 101
SHEET 35 OF 51

EPOXY-COATED PREFABRICATED REINFORCEMENT

Bar reinforcement to be epoxy-coated shall conform to the ASTM Designation and grade required or permitted by Section 52-1.02A, "Bar Reinforcement," of the Standard Specifications, for the location or type of structure involved. The coated bar reinforcement shall conform to the requirements in ASTM Designation: A 934/A 934M except as provided herein.

Wire reinforcement to be epoxy-coated shall conform to the ASTM Designation and grade required or permitted by Section 52-1.02D, "Reinforcing Wire," of the Standard Specifications for the location or type of structure involved. The coated wire reinforcement shall conform to the requirements for Class A, Type 2 coating of ASTM Designation: A 884/A 884M except as provided herein.

Appendices X1 and X2, "Guidelines For Job-Site Practices," of ASTM Designation: A 884/A 884M and A 934/A 934M, respectively, shall apply except as provided herein. The term "shall" shall replace the term "should" in these appendices. Section X1.2 of Appendix X1 and Section X2.2 of Appendix X2 shall not apply.

All coatings shall be purple or gray in color.

Except for field welding of butt splices, all welding of reinforcement shall be complete before epoxy coating the reinforcement.

Prior to epoxy coating, all resistance butt welds shall have the weld flash removed to produce a smooth profile free of any sharp edges that would prevent proper coating of the bar. The flash shall be removed such that the ultimate tensile strength and elongation properties of the bar are not reduced, and the outside radius of the flash, at any point along the circumference of the bar, is 1) not less than the nominal radius of the bar, nor 2) greater than 5 mm beyond the nominal radius of the bar.

A proposed weld flash removal process shall be submitted to and approved by the Engineer in writing prior to performing any removal work. The submittal shall demonstrate that the proposed flash removal process produces a smooth profile that can be successfully epoxy-coated in conformance with the requirements specified herein.

Bending of epoxy-coated reinforcement after the coating has been applied will not be allowed.

When any portion of a reinforcing bar or wire requires epoxy coating, the entire bar or wire shall be coated, except, when the bar or wire is spliced outside of the limits of epoxy coating shown on the plans, epoxy coating will not be required on the portion of bar or wire beyond the splice.

Within areas where epoxy-coated reinforcement is required, tie wire and bar chairs or other metallic devices used to secure or support the reinforcement shall be plastic-coated or epoxy-coated to prevent corrosion of the devices or damage to the coated reinforcement.

Prior to coating, the Contractor shall furnish to the Transportation Laboratory a representative 110 g sample from each batch of epoxy coating material to be used. Each sample shall be packaged in an airtight container identified with the manufacturer's name and batch number.

Two 700-mm long samples of coated bar or wire reinforcement from each size and from each load shipped to the jobsite shall be furnished to the Engineer for testing. These samples shall be representative of the material furnished. These samples, as well as any additional random samples taken by the Engineer, may be tested for specification compliance. Additional sampling, and all tests performed by the Engineer, may be performed at any location deemed appropriate by the Engineer. Failure of any sample to meet the requirements of the specifications will be cause for rejection.

If any bar tested for coating thickness or for adhesion of coating fails to meet the requirements for coated bars in Section 9 of ASTM Designation: A 934/A 934M, 2 retests on random samples taken from bars represented by the failed test will be conducted for each failed test. If the results of both retests meet the specified requirements, the coated bars represented by the samples may be certified as meeting the test requirements.

If any wire reinforcement tested for coating thickness or for flexibility fails to meet the requirements for coated wire in Section 8 of ASTM Designation: A 884/A 884M, 2 retests on random samples taken from wire represented by the failed test will be conducted for each failed test. If the results of both retests meet the specified requirements, the coated wire represented by the samples may be certified as meeting the test requirements.

Epoxy-coated reinforcement shall be covered with an opaque polyethylene sheeting or other suitable protective material to protect the reinforcement from exposure to sunlight, salt spray, and weather. For stacked bundles, the protective covering shall be draped around the perimeter of the stack. The covering shall be adequately secured; however, it should allow for air circulation around the reinforcement to prevent condensation under the covering. Epoxy-coated reinforcement shall not be stored within 300 m of ocean or tidal water for more than 2 months.

All visible damage to coatings caused by shipping, handling, or installation shall be repaired as required for repairing coating damaged prior to shipment conforming to the requirements in ASTM Designation: A 934/A 934M for bar reinforcement or ASTM Designation: A 884/A 884M for wire reinforcement. When the extent of coating damage prior to repair exceeds 2 percent of the bar or wire surface area in any 300-mm length, repair of the bar or wire will not be allowed, and the coated bar or wire will be rejected.

The patching material and process shall be suitable for field application. The patching material shall be prequalified as required for the coating material and shall be either identified on the container as a material compatible with the reinforcement coating, or shall be accompanied by a Certificate of Compliance certifying that the material is compatible with the reinforcement coating. Damaged areas shall be patched in conformance with the patching material manufacturer's recommendations.

With the exception of lap splices, all epoxy-coated reinforcement splices shall be coated with a corrosion protection covering included on the Department's list of approved products available from the Transportation Laboratory. The covering shall be installed in conformance with the manufacturer's recommendations and as directed by the Engineer.

A Certificate of Compliance conforming to the provisions in Section 6-1.07, "Certificates of Compliance," of the Standard Specifications, shall be furnished for each shipment of epoxy-coated bar or wire reinforcement certifying that the coated bars or wire conform to the requirements in ASTM Designation: A 934/A 934M for bars or A 884/A 884M for wire and Section 52-1.02B, "Epoxy-coated Reinforcement," of the Standard Specifications. This Certificate of Compliance shall include all the certifications specified in ASTM Designation: A 934/A 934M for bars or ASTM Designation: A 884/A 884M for wire. All qualification testing and certification shall be by an independent laboratory. The Department maintains a list of prequalified epoxy coatings. The prequalified list can be obtained by contacting the Transportation Laboratory and is available at:

http://www.dot.ca.gov/hq/esc/approved_products_list/

10-1.__ BRIDGE DECK DRAINAGE SYSTEM

Bridge deck drainage systems shall conform to the provisions for miscellaneous bridge metal in Section 75, "Miscellaneous Metal," of the Standard Specifications and these special provisions.

Self-tapping screws used for sleeve connections shall be hex-head stainless steel, installed in holes drilled to fit the self-tapping screws, conforming to the requirements of ASTM Designation: A 276, Type 316.

At the Contractor's option, fiberglass pipes and fittings with the same diameter and minimum bend radius as those shown on the plans, may be substituted for welded steel pipe in deck drain systems.

Fiberglass pipe and fittings shall conform to the requirements in ASTM Designation: D 2996, and shall have a minimum short-term rupture strength of 207 MPa. The adhesive type recommended by the manufacturer shall be used for joining pipe and fittings. Fiberglass pipe not enclosed in a box girder cell or encased in concrete shall be manufactured from ultraviolet-resistant resin pigmented with concrete-gray color, or be coated with a concrete-gray resin-rich exterior coating. Paint shall not be used. Fiberglass pipe treated with ultraviolet protection shall withstand a minimum of 2500 hours of accelerated weathering when tested in conformance with the requirements in ASTM Designation: G 154. Lamps shall be UV-B (313 nm wavelength). The resting cycle shall be 4 hours of ultraviolet exposure at 60°C, and then 4 hours of condensate exposure at 50°C. After testing, the surface of the pipe shall exhibit no fiber exposure, crazing, or checking, and only a slight chalking or color change.

Support spacing for fiberglass pipe shall be the same as shown on the plans for welded steel pipe. Pipe supports shall have a width of not less than 38 mm.

A Certificate of Compliance for fiberglass pipe and fittings shall be furnished to the Engineer in conformance with the provisions in Section 6-1.07, "Certificates of Compliance," of the Standard Specifications. The Certificate of Compliance shall include all laboratory test results conforming to the provisions specified herein.

For drainage piping NPS 8 or smaller, which is: (1) enclosed in a box girder cell and exposed for a length not greater than 6 m within the cell, or (2) encased in concrete, the Contractor shall have the option of substituting polyvinyl chloride (PVC) plastic pipe and fittings, with the same diameter and minimum bend radius as shown on the plans, for welded steel pipe.

The PVC plastic pipe and fittings shall be Schedule 40 conforming to the requirements of ASTM Designations: D 1785. The maximum support spacing for PVC plastic pipe shall be 2 m.

Couplings used to connect fiberglass pipe to steel shall be threaded or flanged. The sleeve connections shown on the plans shall not be used for fiberglass pipe.

If fiberglass pipe is substituted for welded steel pipe, the quantity of drainage piping will be computed on the basis of the dimensions and details shown on the plans, and no change in the quantities to be paid for will be made because of the use of fiberglass pipe.

Bridge deck drainage systems will be measured and paid for by the kilogram in the same manner specified for miscellaneous metal (bridge) in Section 75-1.06, "Measurement," and Section 75-1.07, "Payment," of the Standard Specifications.

CONTRACT NO. 04-0E8804
CONTRACT CHANGE ORDER NO 161
SHEET 37 OF 51

10-1.__ METAL BEAM GUARD RAILING

Metal beam guard railing shall be constructed in conformance with the provisions in Section 83-1, "Railings," of the Standard Specifications and these special provisions.

Line posts shall be wood, steel, or plastic. Blocks shall be wood or plastic.

Metal beam guard railing elements and required backup plates, terminal sections, end caps, and return caps shall conform to the requirements of Type 2 W-Beam as shown in AASHTO Designation: M 180.

CONTRACT NO. 04-0120124
CONTRACT CHANGE ORDER NO 101
SHEET 30 OF 51

10-1.__ CONCRETE BARRIER

Concrete barriers shall conform to the provisions in Section 83-2, "Barriers," of the Standard Specifications and these special provisions.

If reinforcement is encountered during drilling before the specified depth is attained, the Engineer shall be notified. Unless the Engineer approves coring through the reinforcement, the hole will be rejected and the Contractor shall drill a new hole adjacent to the rejected hole to the depth shown on the plans.

Bar reinforcing steel for use in concrete barriers shall conform to the provisions in "Epoxy-Coated Prefabricated Reinforcement," of these special provisions.

Concrete barriers on bridges or walls shall be cured in conformance with the provisions in Section 90-7.01A, "Water Method," of the Standard Specifications.

Full compensation for epoxy-coated bar reinforcement shall be considered as included in the contract price paid per meter for concrete barrier of the type or types listed in the Engineer's Estimate and no separate payment will be made therefor.

DIST	COUNTY	ROUTE	KILOMETER POST TOTAL PROJECT	SHEET No	TOTAL SHEETS
04	SF	80	12.6/13.2		

M J Cullen 10-30-07
REGISTERED CIVIL ENGINEER DATE

PLANS APPROVAL DATE

The State of California or its officers or agents shall not be responsible for the accuracy or completeness of electronic copies of this plan sheet.

REGISTERED PROFESSIONAL ENGINEER
W. J. CULLER
No. C 40620
Exp. 03-31-09
CIVIL
STATE OF CALIFORNIA

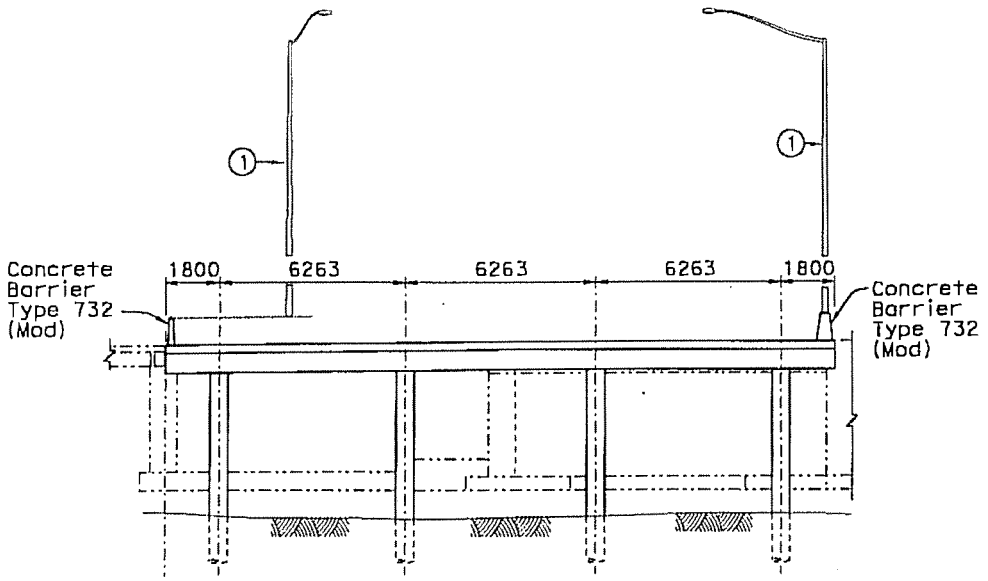

SECTION A-A
1:125

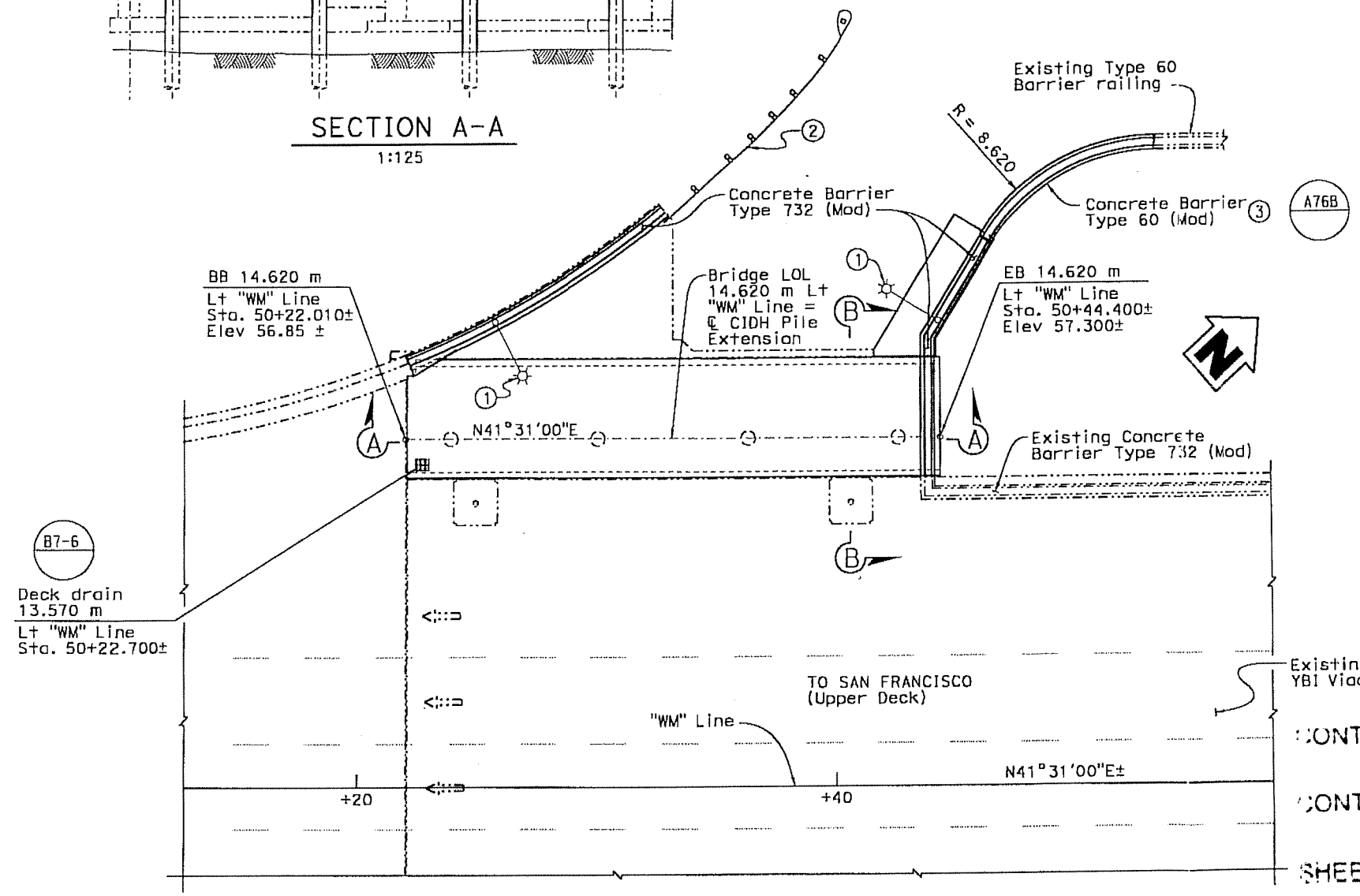

PLAN
1:125

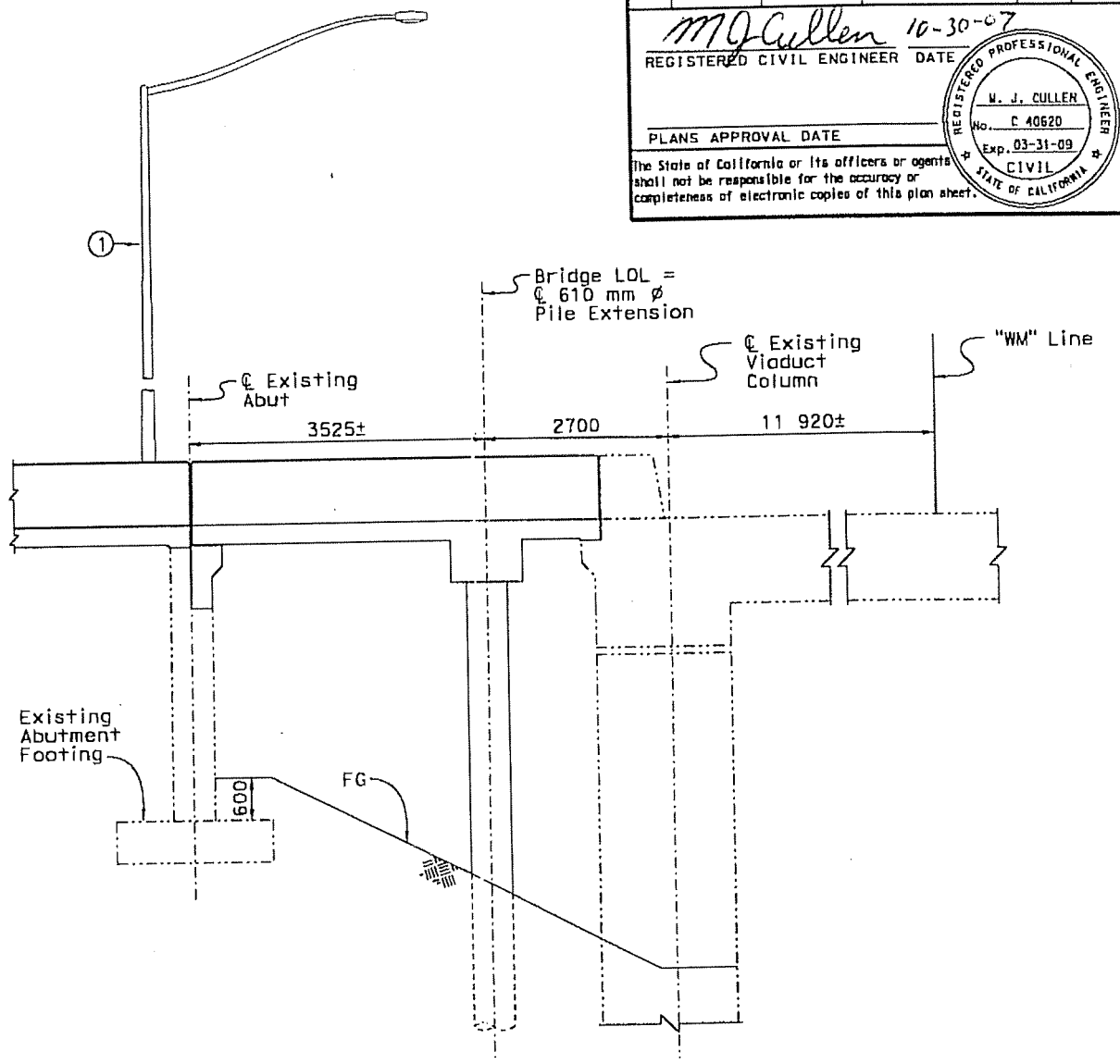

SECTION B-B
1:50

CONTRACT NO. 04-0120R4

CONTRACT CHANGE ORDER NO 101

SHEET 40 OF 51

INDEX TO PLANS

1. GENERAL PLAN
2. FOUNDATION PLAN
3. CIDH PILE DETAILS
4. DEMOLITION PLAN
5. ABUTMENT MODIFICATIONS NO. 1
6. ABUTMENT MODIFICATIONS NO. 2
7. SLAB AND BENT CAP DETAILS
8. CONCRETE BARRIER TYPE 732 (MOD)
9. MISCELLANEOUS DETAILS
10. LOG OF TEST BORINGS 1 OF 2
11. LOG OF TEST BORINGS 2 OF 2

NOTE:
① Light Standard Type 21 see Roadway Plans ES-6A 19.500 m Lt "WM" Line
② Metal Beam Guard Railing, see A77A1 A77B1 A77C1 A77C3 A77J4 A78C1
③ For additional details see "Miscellaneous Details" sheet

For General Notes see "CIDH Pile Details" sheet.

NOTE:
THE CONTRACTOR SHALL VERIFY ALL CONTROLLING FIELD DIMENSIONS BEFORE ORDERING OR FABRICATING ANY MATERIAL.

Caltrans Metric

DESIGN ENGINEER

	BY	CHECKED
DESIGN	G. Schuster	M. J. Cullen
DETAILS	G. M. Souza	M. J. Cullen
QUANTITIES	M. J. Cullen	H. Fong

LOAD & RESISTANCE FACTOR DESIGN — LIVE LOADING: HL93 W/"LOW-BOY"; PERMIT DESIGN VEHICLE

	BY	CHECKED
LAYOUT	G. Schuster	M. J. Cullen
SPECIFICATIONS	S. Margaris	PLANS AND SPECS COMPARED S. Margaris

ALL DIMENSIONS ARE IN METERS UNLESS OTHERWISE SHOWN

ORIGINAL SCALE IN MILLIMETERS FOR REDUCED PLANS 0 10 20 30 40 50 60 70 80 90 100

STATE OF CALIFORNIA
DEPARTMENT OF TRANSPORTATION

DIVISION OF ENGINEERING SERVICES
STRUCTURE DESIGN
DESIGN BRANCH 5

CU 04251
EA 0120P1

FILE => 01-34-0006-a-gp.dgn

BRIDGE NO. 34-0006
KILOMETER POST NA

DISREGARD PRINTS BEARING EARLIER REVISION DATES

REVISION DATES: 10-16-07 | 10-19-07 | 10-25-07 | 10-26-07 | 10-29-07

SHEET 1 OF 11

STRUCTURES DESIGN DETAIL SHEET (METRIC) (REV.03-17-04)

WEST TIE IN PHASE 1
YBI VIADUCT - WESTBOUND ONRAMP
GENERAL PLAN

USERNAME => dsouza
DATE PLOTTED => 30-OCT-2007
TIME PLOTTED => 11:03

DIST	COUNTY	ROUTE	KILOMETER POST TOTAL PROJECT	SHEET No	TOTAL SHEETS
04	SF	80	12.6/13.2		

Caltrans Metric

M J Cullen 10-29-07
REGISTERED CIVIL ENGINEER DATE

PLANS APPROVAL DATE

The State of California or its officers or agents shall not be responsible for the accuracy or completeness of electronic copies of this plan sheet.

REGISTERED PROFESSIONAL ENGINEER
M. J. CULLEN
No. C 40620
Exp. 03-31-09
CIVIL
STATE OF CALIFORNIA

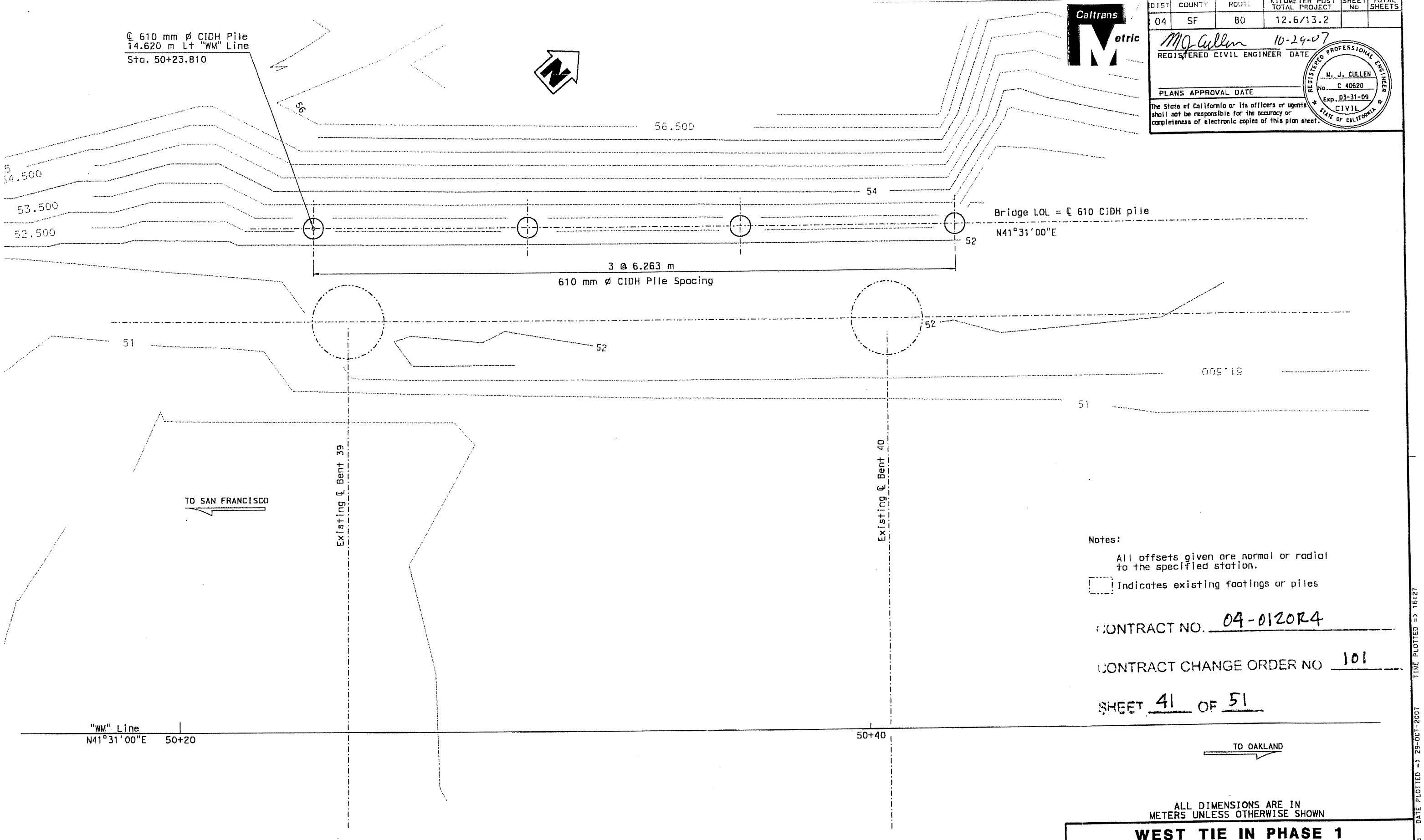

Notes:

All offsets given are normal or radial to the specified station.

[ ] Indicates existing footings or piles

CONTRACT NO. 04-0120R4

CONTRACT CHANGE ORDER NO 101

SHEET 41 OF 51

ALL DIMENSIONS ARE IN METERS UNLESS OTHERWISE SHOWN

WEST TIE IN PHASE 1

YBI VIADUCT - WESTBOUND ONRAMP

FOUNDATION PLAN

PRELIMINARY INVESTIGATION SECTION					
ALE	VERT.DATUM NGVD29	PHOTOGRAMMETRY AS OF:			
50	HORZ.DATUM NAD83	SURVEYED BY		DRAFTED BY	
IGNMENT TIES DIST.TRAVERSE SHEET		FIELD CHECKED BY		CHECKED BY	

DESIGN	BY C. W. Duan	CHECKED M. J. Cullen
DETAILS	BY G. Souza/A. Chen	CHECKED M. J. Cullen
QUANTITIES	BY C. W. Duan	CHECKED M. J. Cullen

STATE OF CALIFORNIA
DEPARTMENT OF TRANSPORTATION

DIVISION OF STRUCTURES
STRUCTURE DESIGN 5

BRIDGE NO. 34-0006
KILOMETER POST NA

CU 04
EA 0120R1

DISREGARD PRINTS BEARING EARLIER REVISION DATES →

REVISION DATES (PRELIMINARY STAGE ONLY)
10-16-07

SHEET 2 OF 11

UCTURES FOUNDATION PLAN SHEET (METRIC) (REV. 4/20/00)

ORIGINAL SCALE IN MILLIMETERS FOR REDUCED PLANS 0 10 20 30 40 50 60 70 80 90 100

FILE => 01-34-0006-e-foundation-plan50.dgn

USERNAME => dsouza DATE PLOTTED => 29-OCT-2007 TIME PLOTTED => 16:27

DIST	COUNTY	ROUTE	KILOMETER POST TOTAL PROJECT	SHEET No	TOTAL SHEETS
04	SF	80	12.6/13.2		

M. J. Cullen 12-12-07
REGISTERED CIVIL ENGINEER DATE

PLANS APPROVAL DATE

The State of California or its officers or agents shall not be responsible for the accuracy or completeness of electronic copies of this plan sheet.

REGISTERED PROFESSIONAL ENGINEER — W. J. CULLEN — No. C 40620 — Exp. 03-31-09 — CIVIL — STATE OF CALIFORNIA

CONTRACT NO. 04-0120R4

CONTRACT CHANGE ORDER NO 101

SHEET 42 OF 51

GENERAL NOTES
LOAD FACTOR DESIGN

DESIGN:
CALTRANS BRIDGE DESIGN SPECIFICATIONS
APRIL 2000 (LFD)
(1996 AASHTO with Interims and Revisions by CALTRANS)

SEISMIC DESIGN:
Caltrans Seismic Design Criteria
(Version 1.3 February 2004) and

LIVE LOADING:
HS20-44 and alternative and permit design load.

SEISMIC LOADING:
See ARS Curve below

REINFORCED CONCRETE:
f_y = 420 MPa
f'_c = 25 MPa
n = 9

REGISTERED PROFESSIONAL ENGINEER — W. J. Cullen — No. C 40620 — Exp. 03-31-09 — CIVIL — STATE OF CALIFORNIA

MARK	DATE	REVISION(S) DESCRIPTIONS	DES	CHK	DET
1	12-12-07	Change Spiral to Hoops (Ultimate Butt Splice)	CD	MC	GS

REGISTERED CIVIL ENGINEER: DATE:

CONTRACT CHANGE ORDER NO. 62
SHEET 1 OF 1

ARS CURVE
no scale

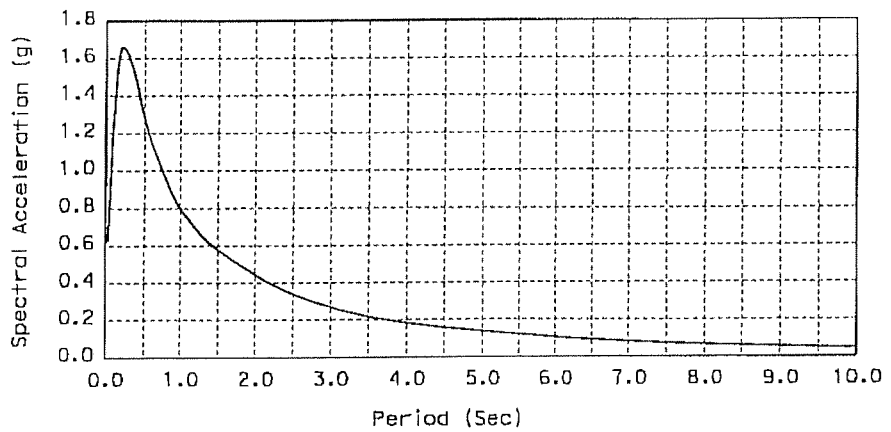

SAFTEY EVALUATION EARTHQUAKE (SEE)

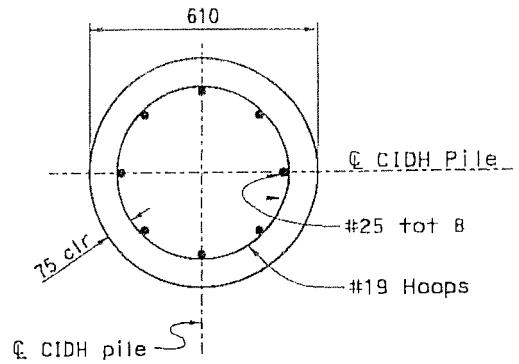

SECTION C-C
1:10

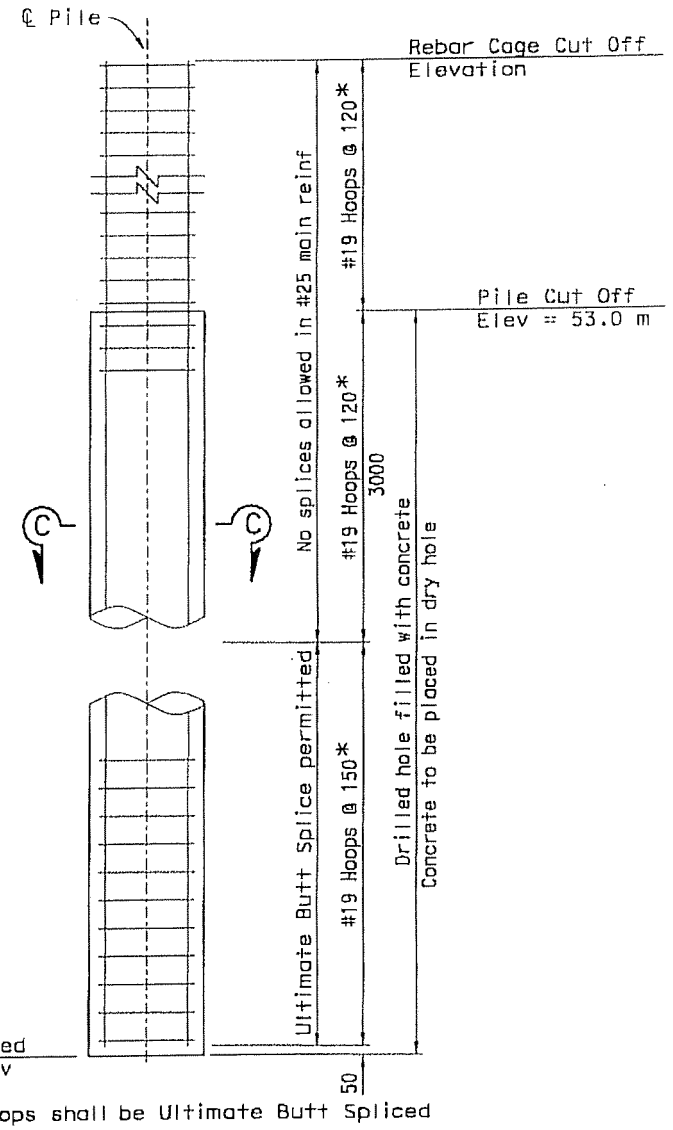

610 mm CIDH CONCRETE PILE ELEVATION BENT
1:20

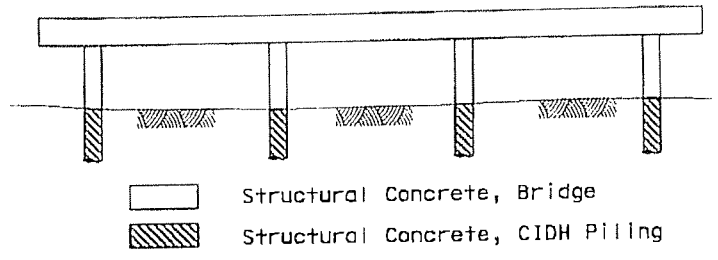

CONCRETE TYPE LIMITS
no scale

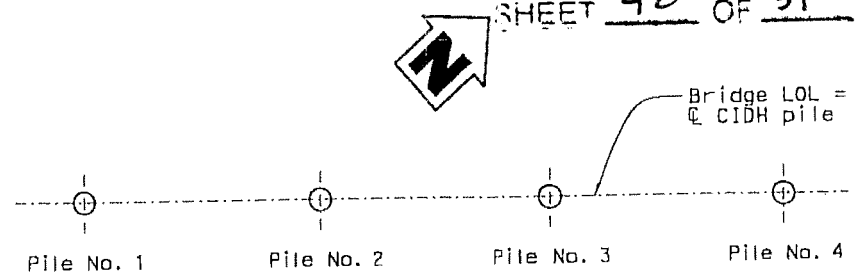

CIDH PILE PLAN
1:100

PILE DATA - 610 mm CIDH CONCRETE PILES

LOCATION	DESIGN LOADING (KN)	NOMINAL RESISTANCE (kN) COMPRESSION	NOMINAL RESISTANCE (kN) TENSION	CUT-OFF ELEVATION (m)	CIDH PILE DESIGN TIP ELEV (m)	CIDH SPECIFIED TIP ELEV (m)
Pile No. 1	1250	2500	N/A	53.0	42.000	42.000 (1)(3)
Pile No. 2	1250	2500	N/A	53.0	42.000	42.000 (1)(3)
Pile No. 3	1250	2500	N/A	53.0	39.000	39.000 (1)(3)
Pile No. 4	1250	2500	N/A	53.0	39.000	39.000 (1)(3)

Note:
Design Tip Elevation is controlled by the following demands:
(1) Compression. (2) Tension, (3) Lateral Loads

STANDARD PLANS DATED JULY 2004

A10A	ACRONYMS AND ABBREVIATIONS (A-L)
A10B	ACRONYMS AND ABBREVIATIONS (M-Z)
A62C	LIMITS OF PAYMENT FOR EXCAVATION AND BACKFILL - BRIDGE
A76B	CONCRETE BARRIER TYPE 60
B0-1	BRIDGE DETAILS
B0-3	BRIDGE DETAILS
B0-5	BRIDGE DETAILS
B7-6	DECK DRAINS - TYPE D-1 and D-2
B7-8	DECK DRAINAGE DETAILS
B11-56	CONCRETE BARRIER TYPE 732 (MOD)

Standard Plan sheet number
Detail number

NOTE:
THE CONTRACTOR SHALL VERIFY ALL CONTROLLING FIELD DIMENSIONS BEFORE ORDERING OR FABRICATING ANY MATERIAL.

Caltrans Metric

ALL DIMENSIONS ARE IN MILLIMETERS UNLESS OTHERWISE SHOWN

ORIGINAL SCALE IN MILLIMETERS FOR REDUCED PLANS 0 10 20 30 40 50 60 70 80 90 100

	BY	CHECKED
DESIGN	M. J. Cullen	G. Schuster
DETAILS	G. M. Souza	CHECKED
QUANTITIES	BY	CHECKED

STATE OF CALIFORNIA
DEPARTMENT OF TRANSPORTATION

DIVISION OF ENGINEERING SERVICES
STRUCTURE DESIGN
DESIGN BRANCH 5

CU 04251
EA 0120P1

FILE => 01-34-0006-e-pile-details-R1.dgn

BRIDGE NO. 34-0006
KILOMETER POST NA

WEST TIE IN PHASE 1
YBI VIADUCT - WESTBOUND ONRAMP
CIDH PILE DETAILS

DISREGARD PRINTS BEARING EARLIER REVISION DATES

REVISION DATES								SHEET	OF
10-16-07	10-19-07	10-25-07	10-26-07	12-13-07				3R1	11

STRUCTURES DESIGN DETAIL SHEET (METRIC) (REV.03-17-04)

USERNAME => gdouzo DATE PLOTTED => 12-DEC-2007 TIME PLOTTED => 13:28

DIST	COUNTY	ROUTE	KILOMETER POST TOTAL PROJECT	SHEET No	TOTAL SHEETS
04	SF	80	12.6/13.2		

REGISTERED CIVIL ENGINEER — 01-22-08 DATE

PLANS APPROVAL DATE

The State of California or its officers or agents shall not be responsible for the accuracy or completeness of electronic copies of this plan sheet.

REGISTERED PROFESSIONAL ENGINEER — M. J. CULLEN — No. C 40620 — Exp. 03-31-09 — CIVIL — STATE OF CALIFORNIA

CONTRACT NO. 04-0120R4

CONTRACT CHANGE ORDER NO 101

SHEET 43 OF 51

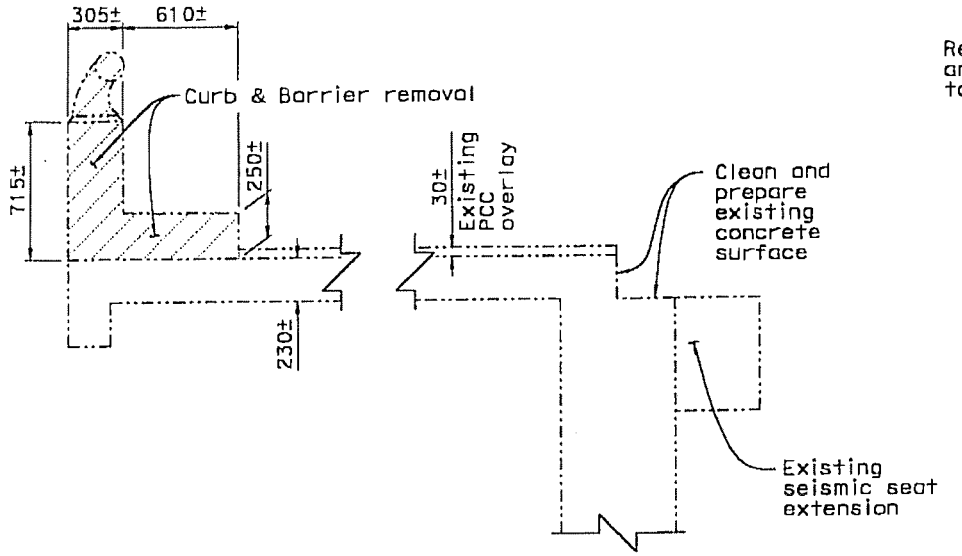

SECTION A-A
1:20

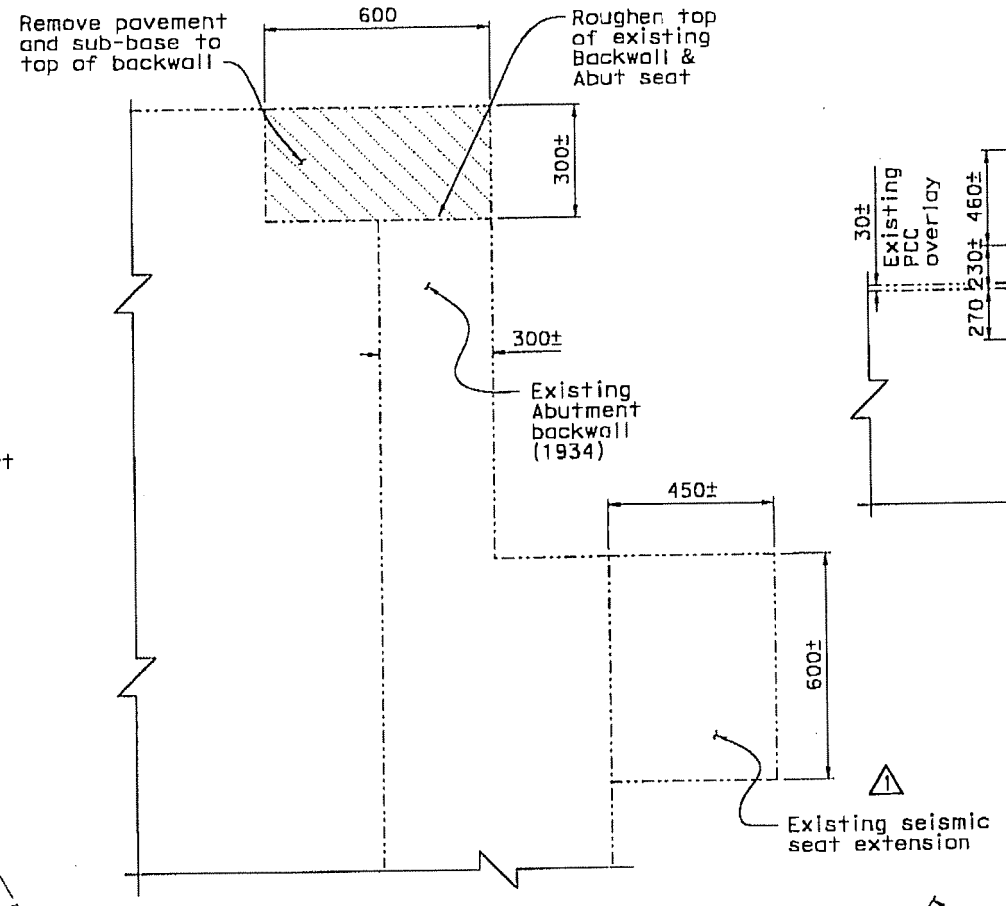

SECTION B-B
1:10

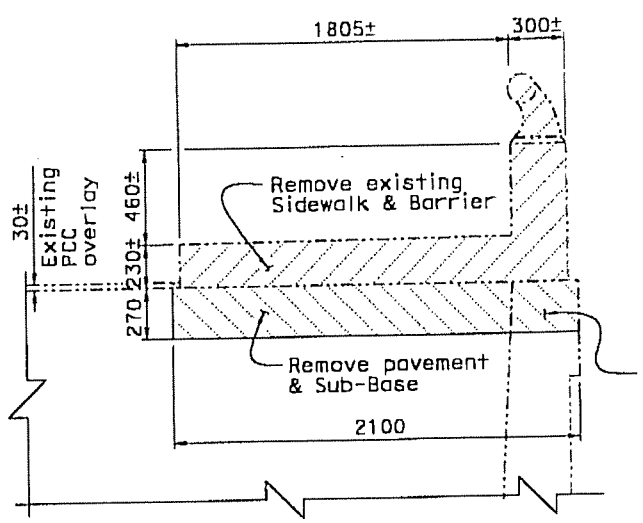

SECTION C-C
1:20

CONTRACT CHANGE ORDER NO. 101
SHEET 1 OF 3

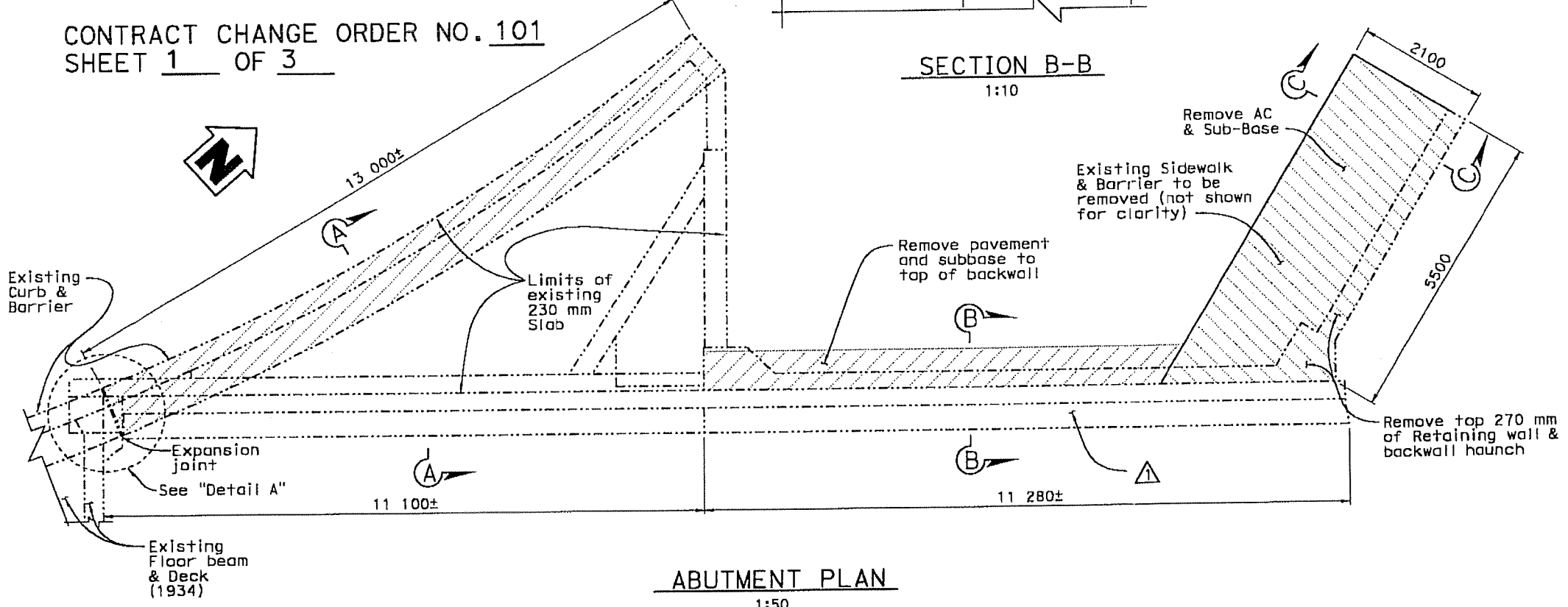

ABUTMENT PLAN
1:50

Notes:

Indicates Curb and Barrier removal

Indicates Girder stub and Slab removal

DETAIL A
1:25

NOTE:
THE CONTRACTOR SHALL VERIFY ALL CONTROLLING FIELD DIMENSIONS BEFORE ORDERING OR FABRICATING ANY MATERIAL.

MARK	DATE	REVISION(S) DESCRIPTIONS	DES	CHK	DET
1	02-28-08	Existing Seismic Seat Extension to remain	CD	MC	GS

REGISTERED CIVIL ENGINEER: DATE:

REGISTERED PROFESSIONAL ENGINEER — M. J. Cullen — No. C 40620 — Exp. 03-31-09 — CIVIL — STATE OF CALIFORNIA

	BY	CHECKED
DESIGN	W. J. Cullen	G. Schuster
DETAILS	G. M. Souza	G. Schuster
QUANTITIES	W. J. Cullen	H. Fang

Caltrans Metric

ALL DIMENSIONS ARE IN MILLIMETERS UNLESS OTHERWISE SHOWN

ORIGINAL SCALE IN MILLIMETERS FOR REDUCED PLANS 0 10 20 30 40 50 60 70 80 90 100

STATE OF CALIFORNIA
DEPARTMENT OF TRANSPORTATION

DIVISION OF ENGINEERING SERVICES
STRUCTURE DESIGN
DESIGN BRANCH 5

BRIDGE NO. 34-0006
KILOMETER POST NA

CU 04251
EA 0120P1

DISREGARD PRINTS BEARING EARLIER REVISION DATES →

REVISION DATES							SHEET	OF
10-25-07	10-26-07	10-26-07	10-26-07	01-22-08	02-28-08		4R1	11

FILE => 01-34-0006-f-abut-demo-plan-R1.dgn

STRUCTURES DESIGN DETAIL SHEET (METRIC) (REV.03-17-04)

WEST TIE IN PHASE 1
YBI VIADUCT - WESTBOUND ONRAMP
DEMOLITION PLAN

USERNAME => gsouza DATE PLOTTED => 26-FEB-2008 TIME PLOTTED => 09:30

04	SF	BO	12.6/13.2

REGISTERED CIVIL ENGINEER 01-22-08 DATE

PLANS APPROVAL DATE

The State of California or its officers or agents shall not be responsible for the accuracy or completeness of electronic copies of this plan sheet.

REGISTERED PROFESSIONAL ENGINEER M. J. CULLEN No. C 40620 Exp. 03-31-09 CIVIL STATE OF CALIFORNIA

CONTRACT NO. 04-0120R4

CONTRACT CHANGE ORDER NO 101

SHEET 44 OF 51

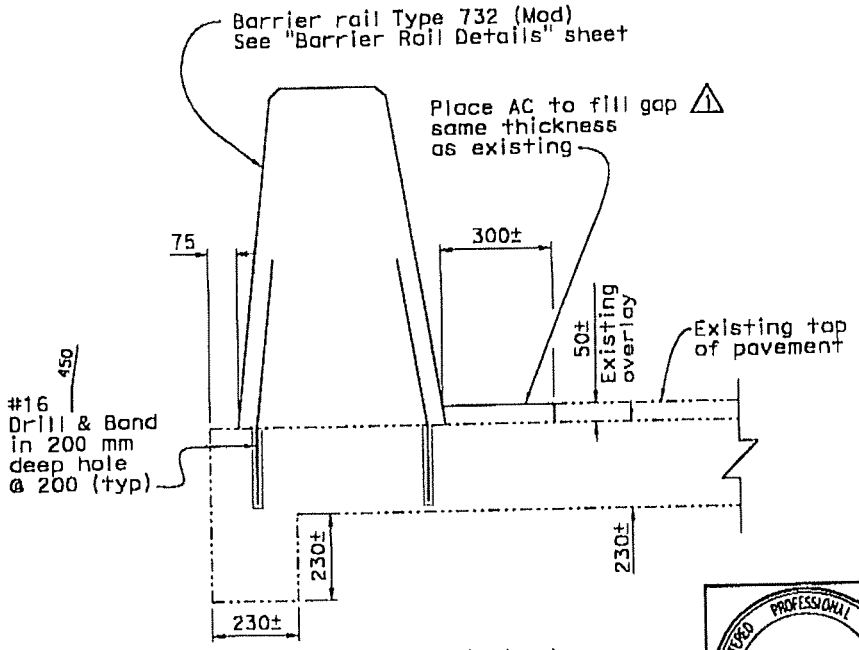

SECTION A-A
1:10

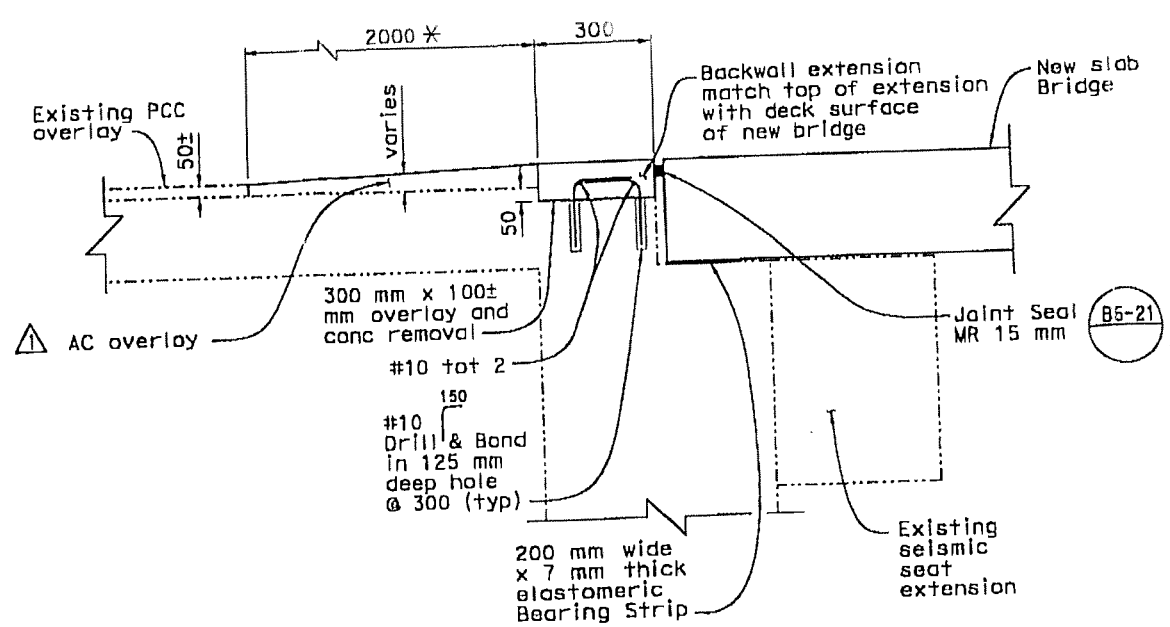

SECTION B-B
1:10

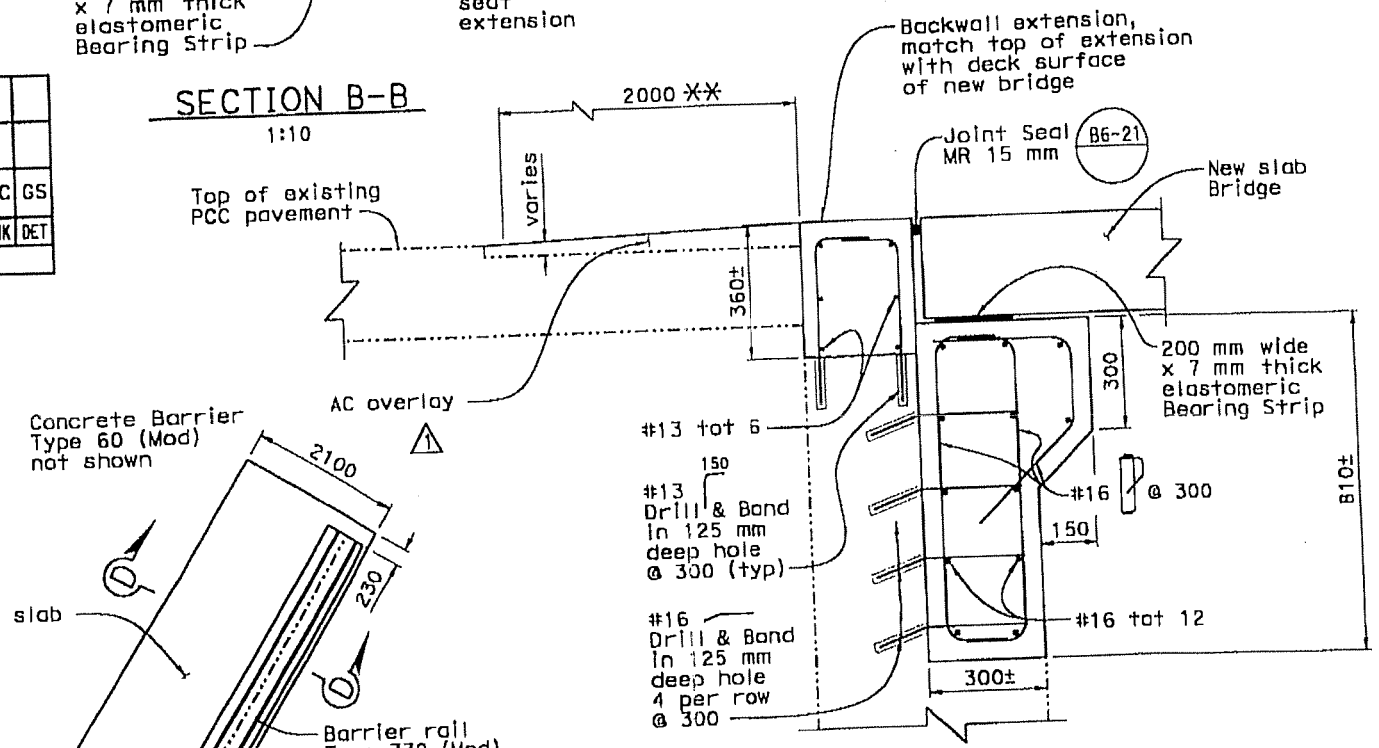

SECTION C-C
1:10

MARK	DATE	REVISION(S) DESCRIPTIONS	DES	CHK	DET
1	01-22-08	Change Polyester Concrete to AC	CD	MC	GS

REGISTERED CIVIL ENGINEER: DATE:

REGISTERED PROFESSIONAL ENGINEER M. J. Cullen No. C 40620 Exp. 03-31-09 CIVIL STATE OF CALIFORNIA

CONTRACT CHANGE ORDER NO. 101
SHEET 2 OF 3

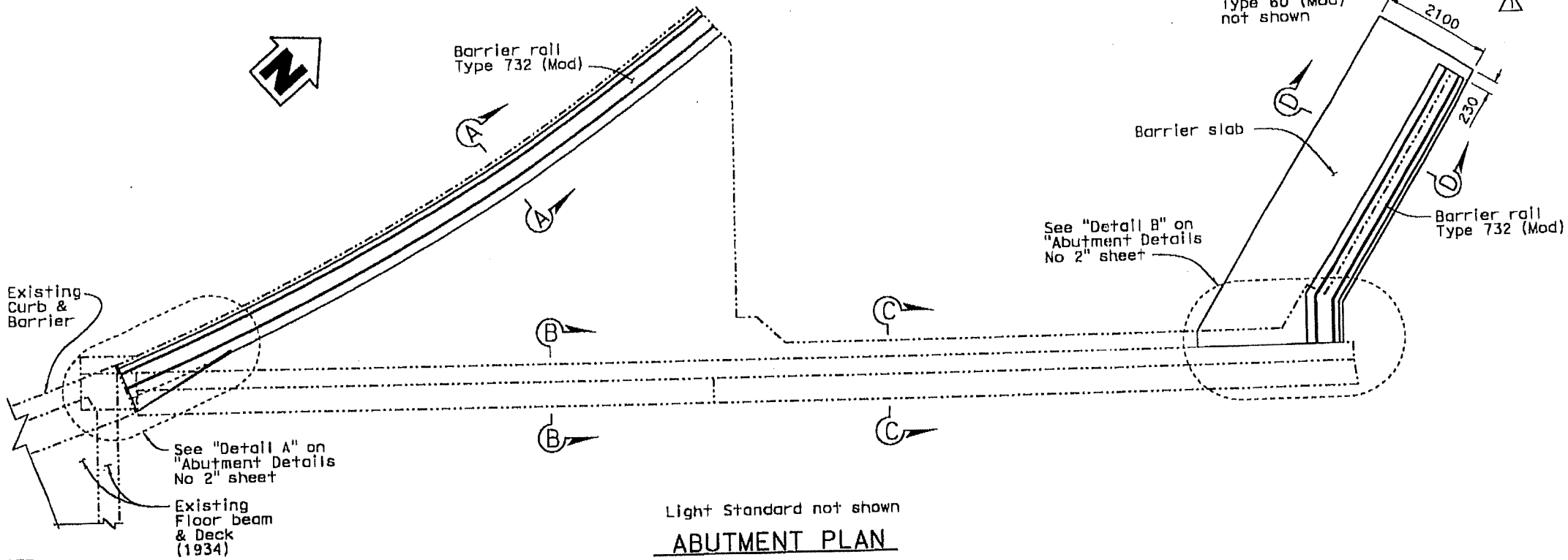

Light Standard not shown

ABUTMENT PLAN
1:50

Note:

For sections D-D, E-E and F-F see "Abutment Details No 2" sheet

1 * Remove existing PCC overlay, taper new AC overlay to match top of Backwall extension

1 ** Remove 50 mm existing pavement, taper new AC overlay to match top of Abutment Backwall extension

NOTE:
THE CONTRACTOR SHALL VERIFY ALL CONTROLLING FIELD DIMENSIONS BEFORE ORDERING OR FABRICATING ANY MATERIAL.

WEST TIE IN PHASE 1

YBI VIADUCT - WESTBOUND ONRAMP

ABUTMENT MODIFICATIONS NO 1

	BY	CHECKED
DESIGN	M. J. Cullen	G. Schuster
DETAILS	G. M. Souza	G. Schuster
QUANTITIES	M. J. Cullen	H. Fong

STATE OF CALIFORNIA
DEPARTMENT OF TRANSPORTATION

DIVISION OF ENGINEERING SERVICES
STRUCTURE DESIGN
DESIGN BRANCH 5

BRIDGE NO. 34-0006
KILOMETER POST NA

CU 04251
EA 0120P1

DISREGARD PRINTS DEARING EARLIER REVISION DATES

REVISION DATES 10-11-07 10-16-07 10-18-07 10-26-07 10-26-07 01-22-08

SHEET 5R1 OF 11

STRUCTURES DESIGN DETAIL SHEET (METRIC) (REV.03-17-04)

Caltrans Metric

ALL DIMENSIONS ARE IN MILLIMETERS UNLESS OTHERWISE SHOWN

ORIGINAL SCALE IN MILLIMETERS FOR REDUCED PLANS 0 10 20 30 40 50 60 70 80 90 100

FILE => 01-34-0006-f-abut-mod01-R1.dgn

USERNAME => qsouza DATE PLOTTED => 23-JAN-2008 TIME PLOTTED => 08:41

DIST	COUNTY	ROUTE	KILOMETER POST TOTAL PROJECT	SHEET NO	TOTAL SHEETS
04	SF	80	12.6/13.2		

MJ Cullen 10-29-07
REGISTERED CIVIL ENGINEER DATE

PLANS APPROVAL DATE

The State of California or its officers or agents shall not be responsible for the accuracy or completeness of electronic copies of this plan sheet.

REGISTERED PROFESSIONAL ENGINEER
W. J. CULLEN
No. C 40620
Exp. 03-31-09
CIVIL
STATE OF CALIFORNIA

CONTRACT NO. 04-0120R4

CONTRACT CHANGE ORDER NO 101

SHEET 45 OF 51

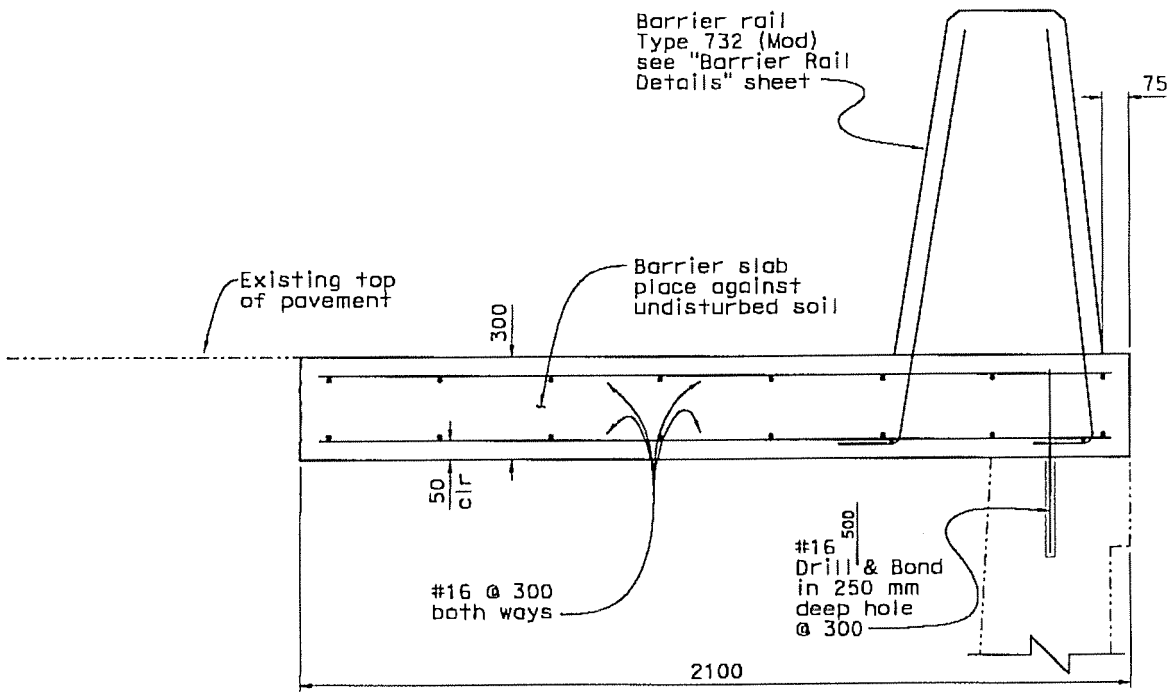

SECTION D-D
1:10

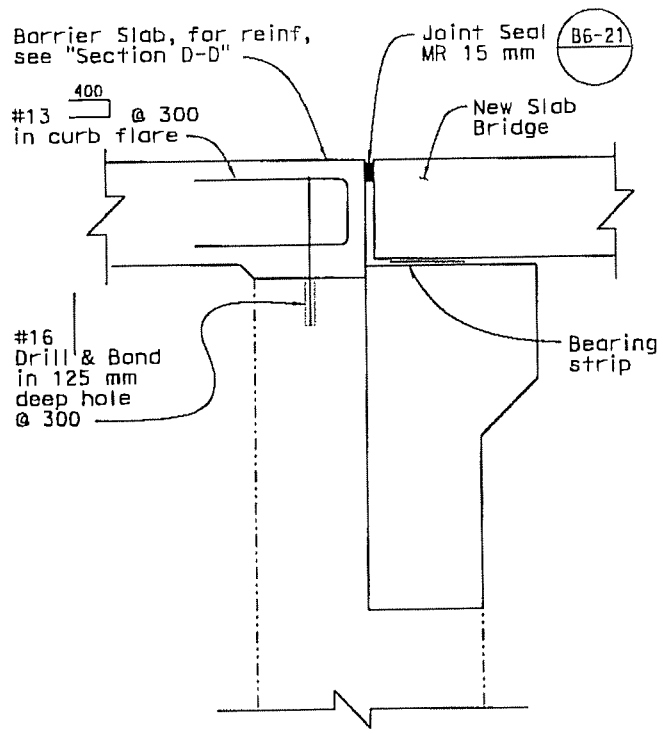

SECTION E-E
1:10

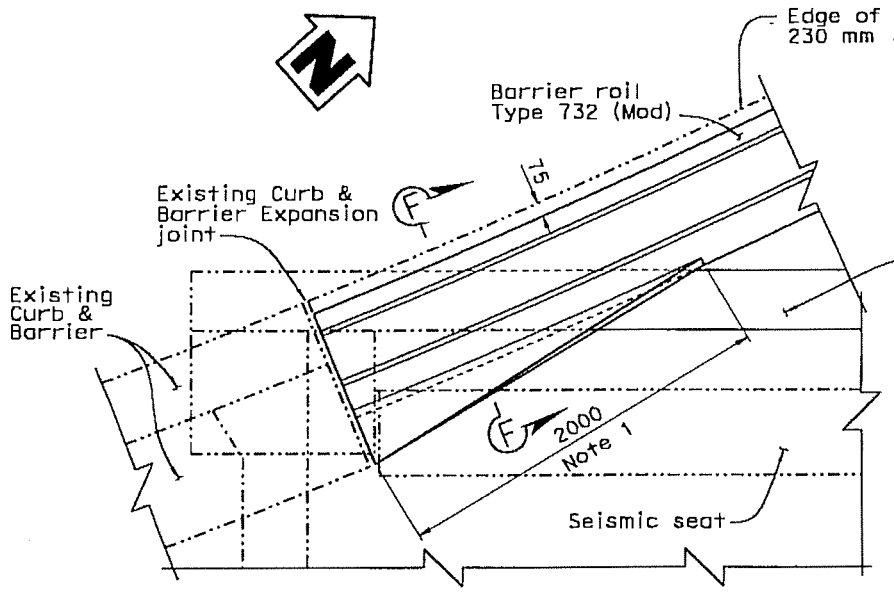

Note 1. Place curb flare on Barrier Type 732 (Mod) to match existing curb and barrier

DETAIL A
1:20

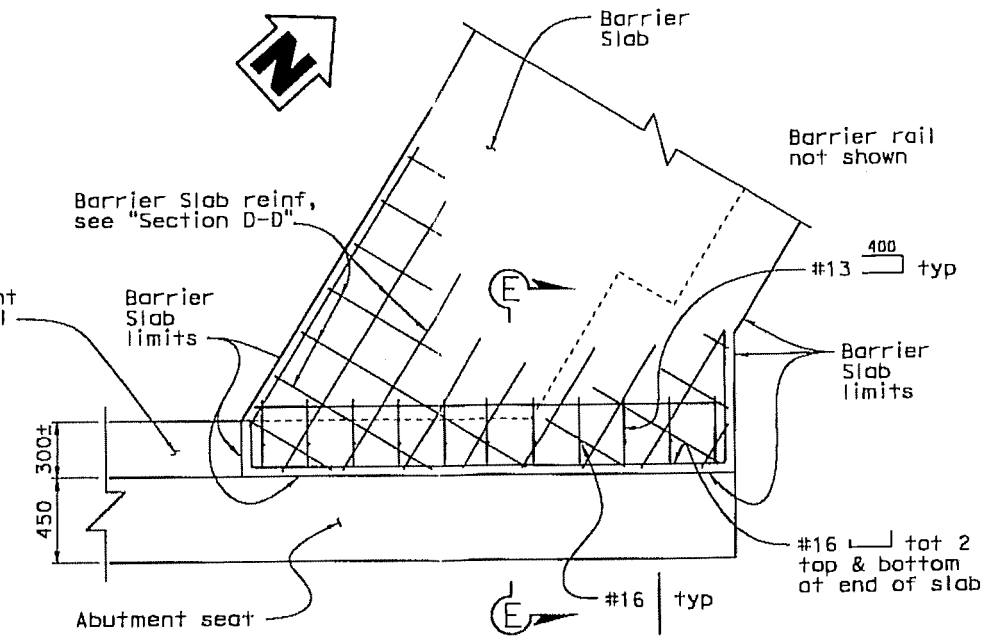

DETAIL B
1:25

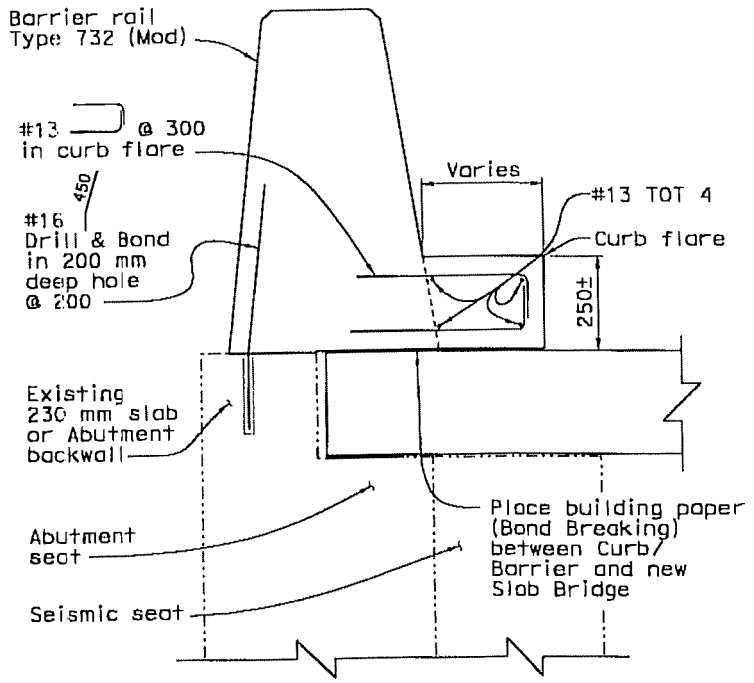

SECTION F-F
1:10

NOTE:
THE CONTRACTOR SHALL VERIFY ALL CONTROLLING FIELD DIMENSIONS BEFORE ORDERING OR FABRICATING ANY MATERIAL.

Caltrans Metric

	BY	CHECKED
DESIGN	M. J. Cullen	G. Schuster
DETAILS	G. M. Souza	G. Schuster
QUANTITIES	M. J. Cullen	H. Fong

STATE OF CALIFORNIA
DEPARTMENT OF TRANSPORTATION

DIVISION OF ENGINEERING SERVICES
STRUCTURE DESIGN
DESIGN BRANCH 5

BRIDGE NO. 34-0006
KILOMETER POST NA

CU 04251
EA 0120P1

ALL DIMENSIONS ARE IN MILLIMETERS UNLESS OTHERWISE SHOWN

ORIGINAL SCALE IN MILLIMETERS FOR REDUCED PLANS 0 10 20 30 40 50 60 70 80 90 100

DISREGARD PRINTS BEARING EARLIER REVISION DATES →

REVISION DATES: 10-09-07 | 10-19-07 | 10-25-07 | 10-26-07 | 10-29-07

SHEET 6 OF 11

FILE => 01-34-0006-f-abut-mod02.dgn

STRUCTURES DESIGN DETAIL SHEET (METRIC) (REV.03-17-04)

WEST TIE IN PHASE 1
YBI VIADUCT - WESTBOUND ONRAMP
ABUTMENT MODIFICATIONS NO 2

USERNAME => sbouza DATE PLOTTED => 29-OCT-2007 TIME PLOTTED => 15:27

DIST	COUNTY	ROUTE	TOTAL PROJECT		
04	SF	80	12.6/13.2		

REGISTERED CIVIL ENGINEER — 01-22-08 DATE

PLANS APPROVAL DATE

The State of California or its officers or agents shall not be responsible for the accuracy or completeness of electronic copies of this plan sheet.

REGISTERED PROFESSIONAL ENGINEER — M. J. CULLEN — No. C 40620 — Exp. 03-31-09 — CIVIL — STATE OF CALIFORNIA

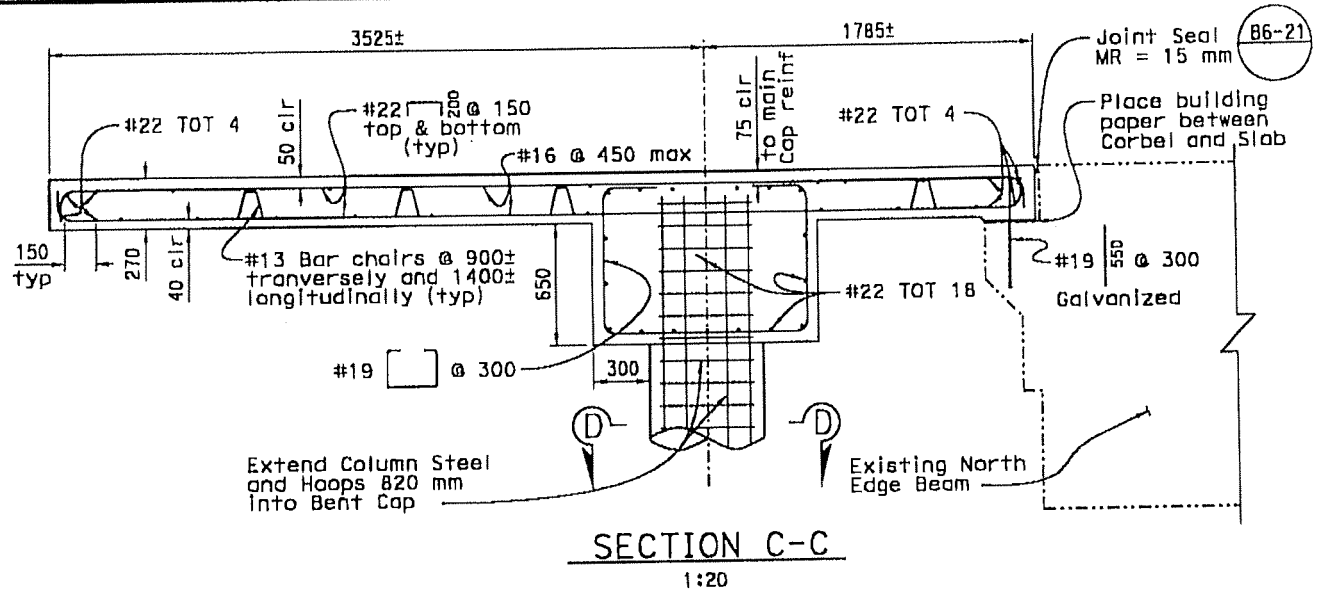

SECTION C-C
1:20

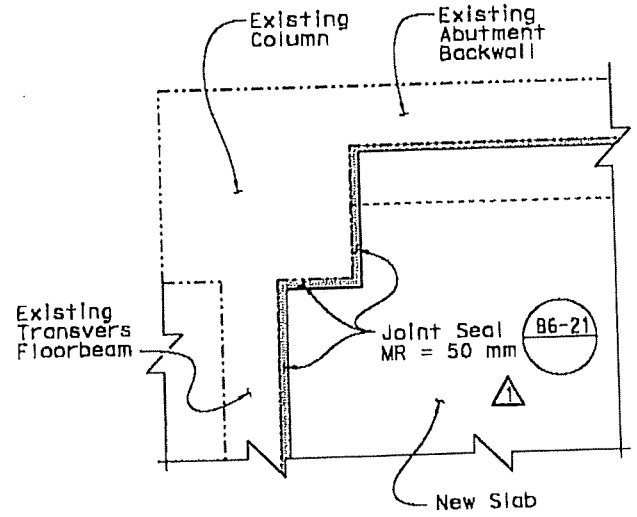

DETAIL A
1:20

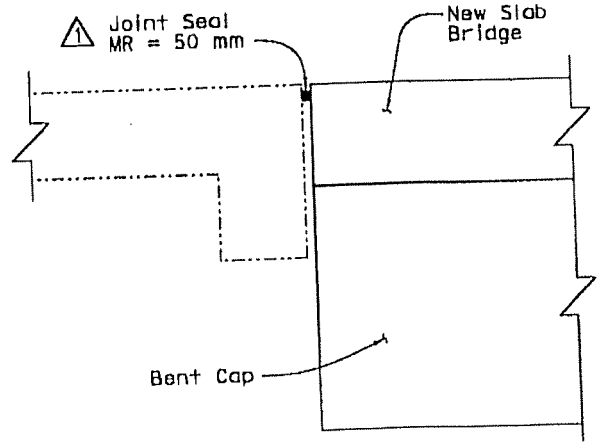

SECTION A-A
1:10

MARK	DATE	REVISION(S) DESCRIPTIONS	DES	CHK	DET
1	01-22-08	Change Joint Seal MR to 50 mm	CD	MC	GS

REGISTERED CIVIL ENGINEER: DATE:

REGISTERED PROFESSIONAL ENGINEER — M. J. Cullen — No. C 40620 — Exp. 03-31-09 — CIVIL — STATE OF CALIFORNIA

MBGR not shown

CONTRACT NO. 04-0120R4

CONTRACT CHANGE ORDER NO 101

SHEET 46 OF 51

CONTRACT CHANGE ORDER NO. 101
SHEET 3 OF 3

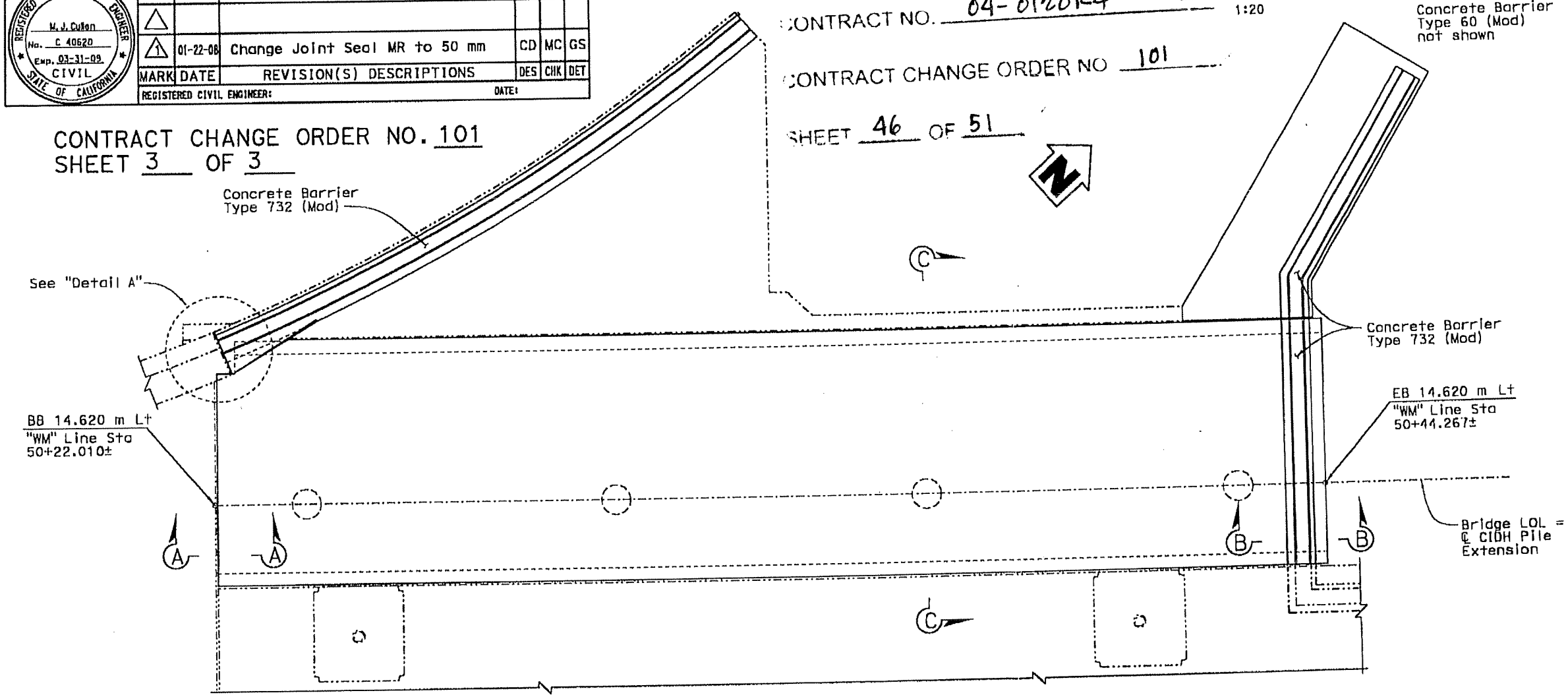

SLAB PLAN
1:50

Concrete Barrier Type 60 (Mod) not shown

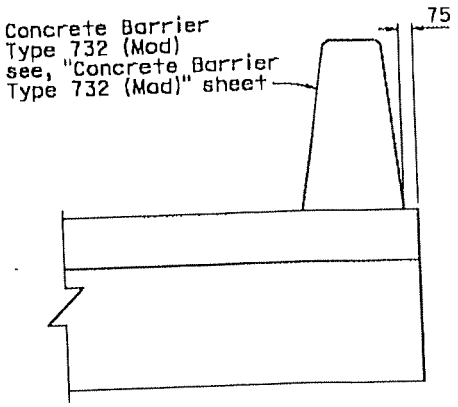

SECTION B-B
1:20

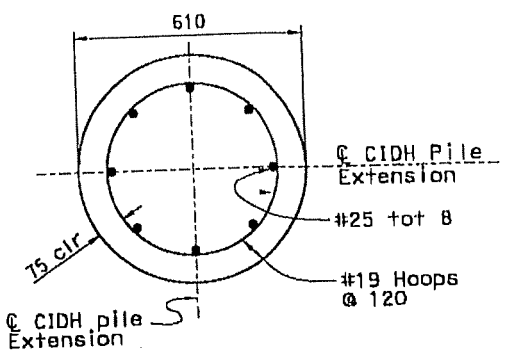

SECTION D-D
1:10

NOTE:
THE CONTRACTOR SHALL VERIFY ALL CONTROLLING FIELD DIMENSIONS BEFORE ORDERING OR FABRICATING ANY MATERIAL.

	BY	CHECKED
DESIGN	M. J. Cullen	G. Schuster
DETAILS	G. M. Souza	G. Schuster
QUANTITIES	M. J. Cullen	H. Fong

ALL DIMENSIONS ARE IN MILLIMETERS UNLESS OTHERWISE SHOWN

ORIGINAL SCALE: IN MILLIMETERS FOR REDUCED PLANS 0 10 20 30 40 50 60 70 80 90 100

STATE OF CALIFORNIA
DEPARTMENT OF TRANSPORTATION

DIVISION OF ENGINEERING SERVICES
STRUCTURE DESIGN
DESIGN BRANCH 5

CU 04251
EA 0120P1

FILE => 01-34-0006-k-slab-bent-details-R1.dgn

BRIDGE NO. 34-0006
KILOMETER POST NA

DISREGARD PRINTS BEARING EARLIER REVISION DATES

REVISION DATES: 10-16-07 | 10-25-07 | 01-22-08

SHEET 7R1 OF 11

WEST TIE IN PHASE 1
YBI VIADUCT - WESTBOUND ONRAMP
SLAB AND BENT CAP DETAILS

STRUCTURES DESIGN DETAIL SHEET (METRIC) (REV.03-17-04)

TIME PLOTTED => 08:32
DATE PLOTTED => 23-JAN-2008
USERNAME => dgouzo

DIST	COUNTY	ROUTE	TOTAL PROJECT		TOTAL SHEETS
04	SF	80	12.6/13.2		

M J Cullen 10-29-07
REGISTERED CIVIL ENGINEER DATE

PLANS APPROVAL DATE

The State of California or its officers or agents shall not be responsible for the accuracy or completeness of electronic copies of this plan sheet.

REGISTERED PROFESSIONAL ENGINEER — M. J. CULLEN — No. C 40620 — Exp. 03-31-09 — CIVIL — STATE OF CALIFORNIA

CONTRACT NO. 04-0120R4

CONTRACT CHANGE ORDER NO 101

SHEET 47 OF 51

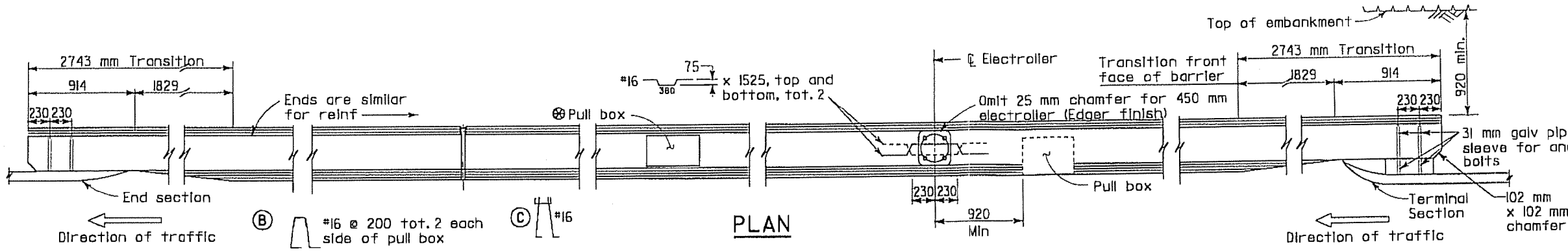

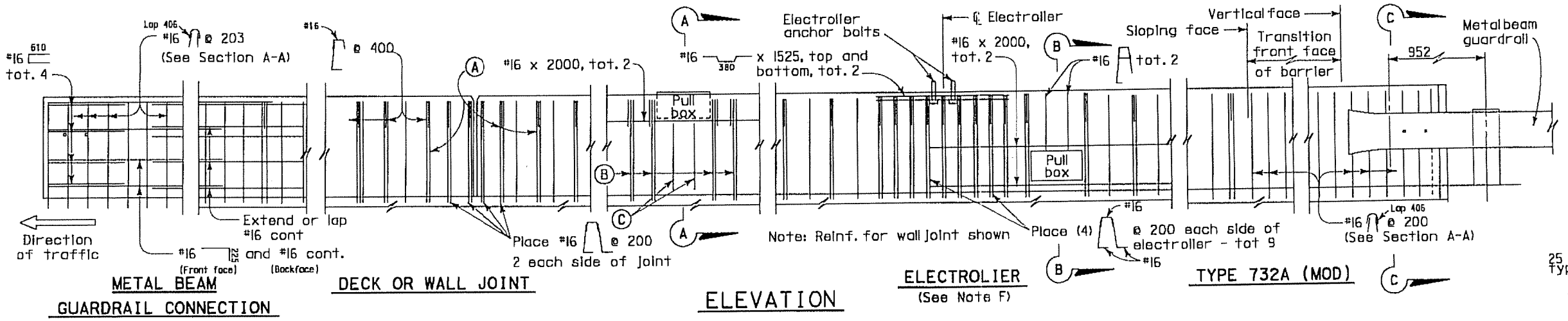

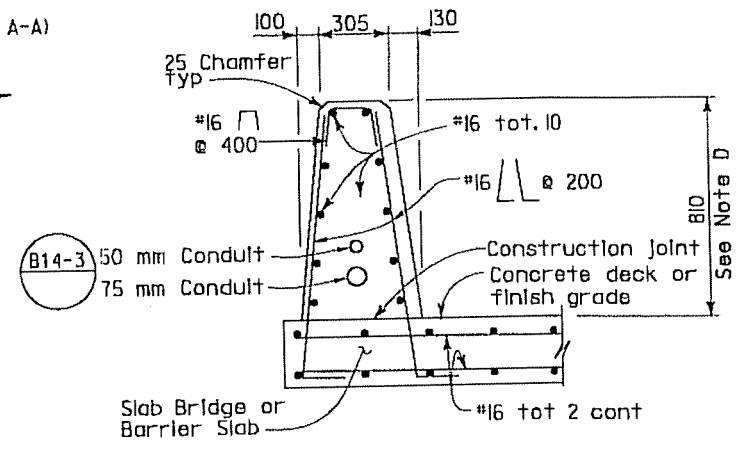

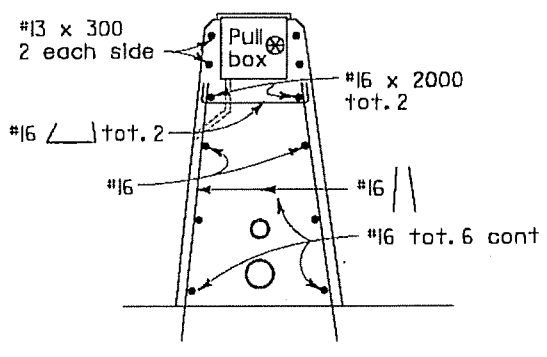

SECTION A-A

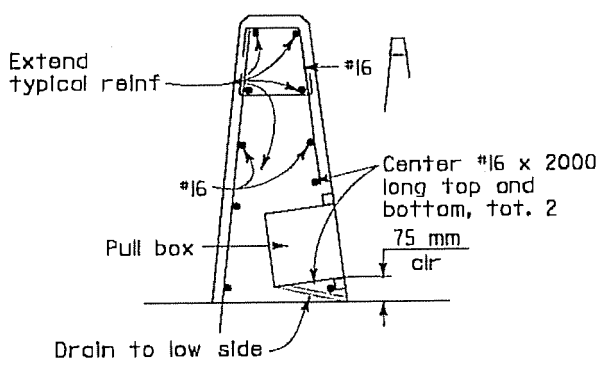

SECTION B-B

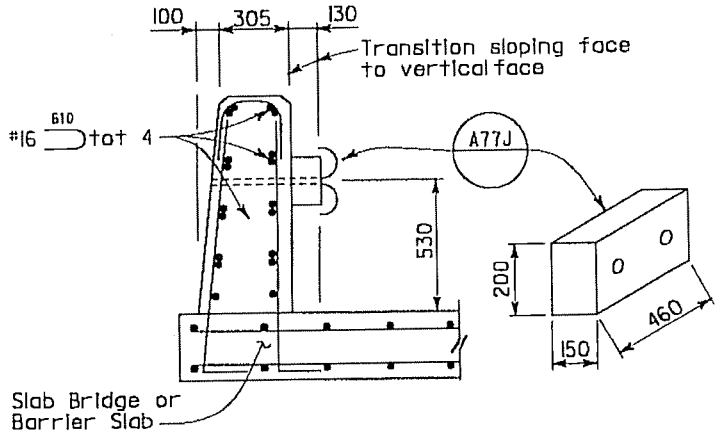

SECTION C-C

NOTES

A. Clearance to reinforcing steel in barrier to be 25 mm, except as noted. Longitudinal reinforcement to stop at all expansion joints.

B. Dimensions may vary with roadway cross slope and with certain thickness of surfacing. See Project Plans.

C. For Metal Beam Guardrail Connection details not shown, see Standard Plans.

NOTE:
THE CONTRACTOR SHALL VERIFY ALL CONTROLLING FIELD DIMENSIONS BEFORE ORDERING OR FABRICATING ANY MATERIAL.

DESIGN	BY M. J. Cullen	CHECKED G. Schuster	
DETAILS	BY Thuy-Mai Tran/G. Souza	CHECKED G. Schuster	
QUANTITIES	BY M. J. Cullen	CHECKED H. Fang	

Caltrans Metric

ALL DIMENSIONS ARE IN MILLIMETERS UNLESS OTHERWISE SHOWN

ORIGINAL SCALE IN MILLIMETERS FOR REDUCED PLANS 0 10 20 30 40 50 60 70 80 90 100

STATE OF CALIFORNIA
DEPARTMENT OF TRANSPORTATION

DIVISION OF ENGINEERING SERVICES
STRUCTURE DESIGN
DESIGN BRANCH 5

CU 04251
EA 0120P1

FILE => 01-34-0006-t-barrierdets.dgn

BRIDGE NO. 34-0006
KILOMETER POST NA

DISREGARD PRINTS BEARING EARLIER REVISION DATES

REVISION DATES: 07-06-07 | 10-16-07 | 10-25-07 | 10-26-07 | 10-29-07

SHEET 8 OF 11

STRUCTURES DESIGN DETAIL SHEET (METRIC) (REV.03-17-04)

WEST TIE IN PHASE 1
YBI VIADUCT - WESTBOUND ONRAMP
CONCRETE BARRIER TYPE 732 (MOD)

DATE PLOTTED => 29-OCT-2007 TIME PLOTTED => 16:27
USERNAME => GSOUZA

DIST	COUNTY	ROUTE	TOTAL PROJECT	No	SHEETS
04	SF	80	12.6/13.2		

M J Cullen 10-29-07
REGISTERED CIVIL ENGINEER DATE

PLANS APPROVAL DATE

The State of California or its officers or agents shall not be responsible for the accuracy or completeness of electronic copies of this plan sheet.

REGISTERED PROFESSIONAL ENGINEER
M. J. CULLEN
No. C 40620
Exp. 03-31-09
CIVIL
STATE OF CALIFORNIA

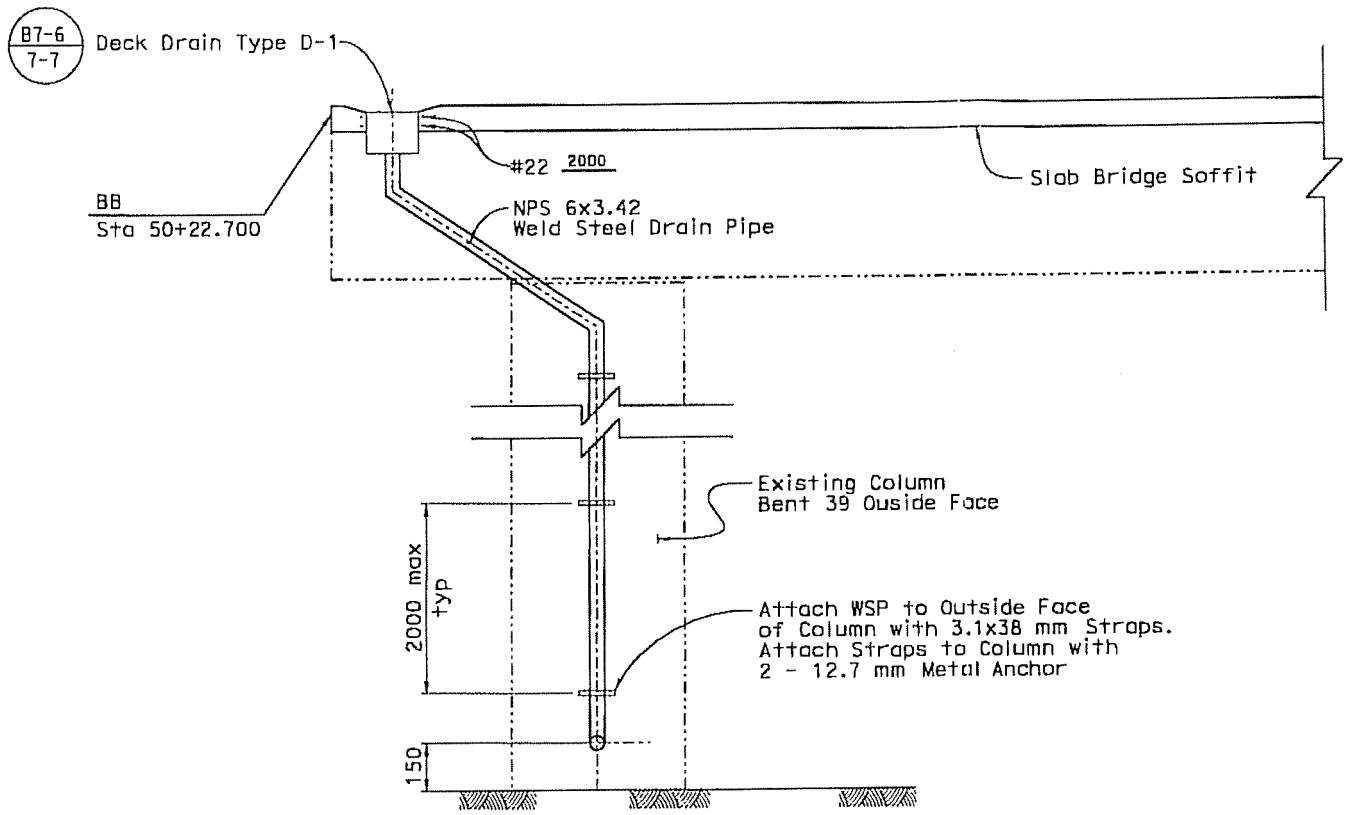

SECTION A-A
1:40

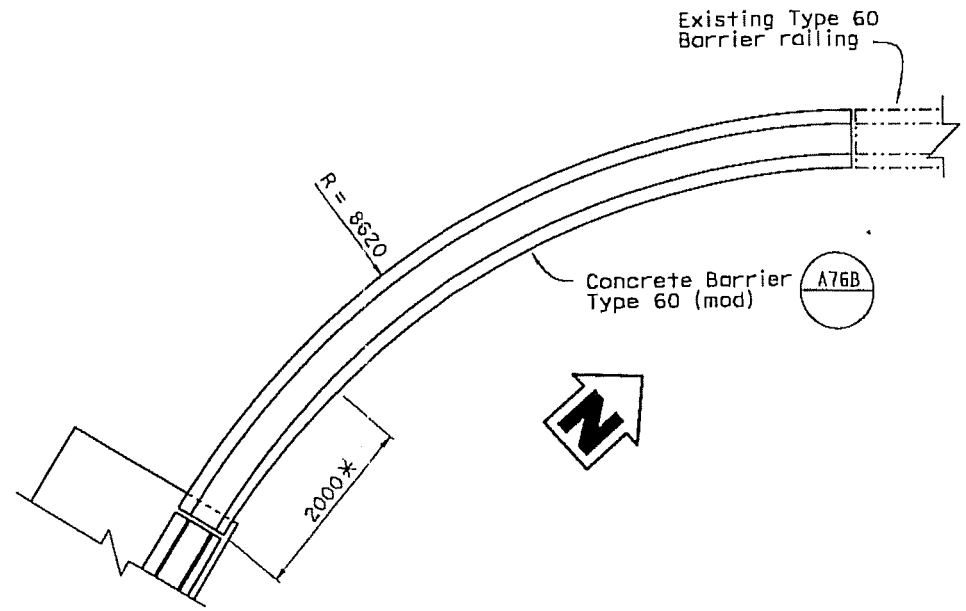

* Transition barrier shape from Concrete Barrier Type 732 (mod) to Concrete Barrier Type 60 (mod)

BARRIER TRANSITION DETAIL
1:40

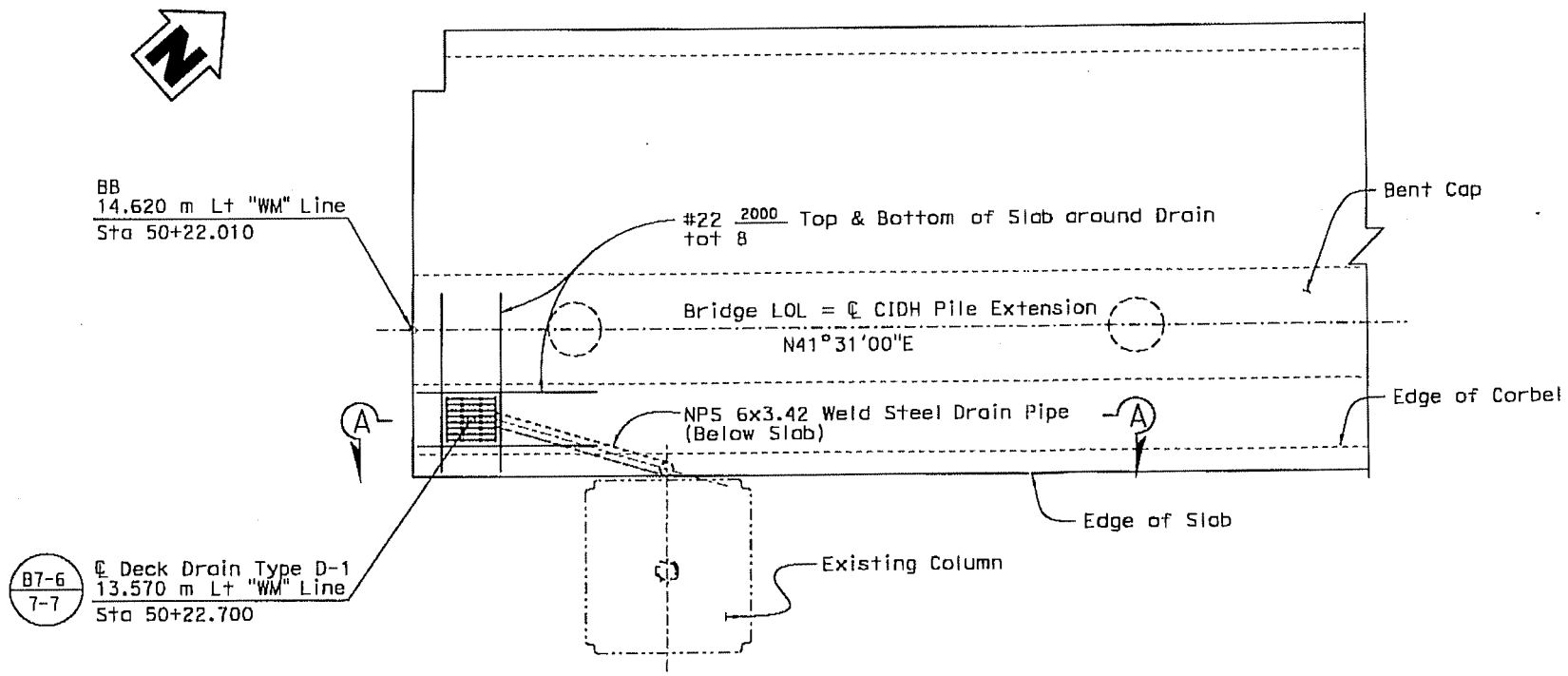

SLAB PART PLAN
1:40

CONTRACT NO. 04-0120R4

CONTRACT CHANGE ORDER NO 101

SHEET 48 OF 51

NOTE:
THE CONTRACTOR SHALL VERIFY ALL CONTROLLING FIELD DIMENSIONS BEFORE ORDERING OR FABRICATING ANY MATERIAL.

DESIGN	BY M. J. Cullen	CHECKED G. Schuster	
DETAILS	BY G. W. Souza/A. Chen	CHECKED G. Schuster	
QUANTITIES	BY M. J. Cullen	CHECKED J. Holman	

STATE OF CALIFORNIA
DEPARTMENT OF TRANSPORTATION

DIVISION OF ENGINEERING SERVICES
STRUCTURE DESIGN
DESIGN BRANCH 5

CU 04251
EA 0120P1

BRIDGE NO. 34-0006
KILOMETER POST NA

WEST TIE IN PHASE 1
YBI VIADUCT - WESTBOUND ONRAMP
MISCELLANEOUS DETAILS

ALL DIMENSIONS ARE IN MILLIMETERS UNLESS OTHERWISE SHOWN

ORIGINAL SCALE IN MILLIMETERS FOR REDUCED PLANS 0 10 20 30 40 50 60 70 80 90 100

DISREGARD PRINTS BEARING EARLIER REVISION DATES

REVISION DATES: 08-16-07 | 10-26-07 | 10-29-07

SHEET 9 OF 11

FILE => 01-34-0006-t-misc-det.dgn

STRUCTURES DESIGN DETAIL SHEET (METRIC) (REV.03-17-04)

USERNAME => gsouza DATE PLOTTED => 29-OCT-2007 TIME PLOTTED => 16:27

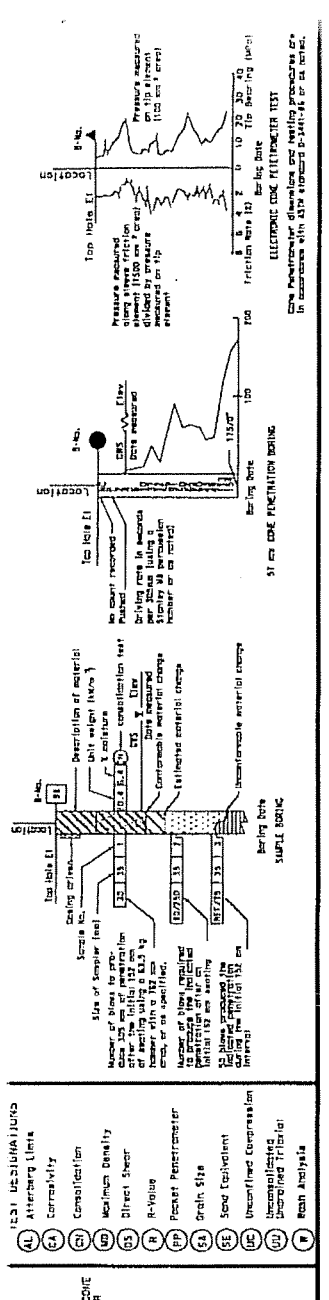

WEATHERING DESCRIPTORS

Modified from United States Bureau of Reclamation, Engineering Geology Field Manual.

Descriptors		Diagnostic features: Chemical weathering-Discoloration and/or oxidation		Mechanical weathering-Grain boundary conditions (disaggregation) primarily for granitics and some coarse-grained sediments	Texture and solutioning		General characteristics (strength, excavation, etc.) §
Alphanumeric descriptor	Descriptive term	Body of rock	Fracture surfaces†		Texture	Solutioning	
W1	Fresh	No discoloration, not oxidized.	No discoloration or oxidation.	No separation, intact (tight).	No change.	No solutioning.	Hammer rings when crystalline rocks are struck. Almost always rock excavation except for naturally weak or weakly cemented rocks such as siltstones or shales.
W2	Slightly weathered to fresh[C]						
W3	Slightly weathered	Discoloration or oxidation is limited to surface of, or short distance from, fractures; some feldspar crystals are dull.	Minor to complete discoloration or oxidation of most surfaces.	No visible separation, intact (tight).	Preserved.	Minor leaching of some soluble minerals may be noted.	Hammer rings when crystalline rocks are struck. Body of rock not weakened. With few exceptions, such as siltstones or shales, classified as rock excavation.
W4	Moderately to slightly weathered [D]						
W5	Moderately weathered	Discoloration or oxidation extends from fractures usually throughout; Fe-Mg minerals are "rusty," feldspar crystals are "cloudy."	All fracture surfaces are discolored or oxidized.	Partial separation of boundaries visible.	Generally preserved.	Soluble minerals may be mostly leached.	Hammer does not ring when rock is struck. Body of rock is slightly weakened. Depending on fracturing, usually is rock excavation except in naturally weak rocks such as siltstones or shales.
W6	Intensely to moderately weathered[C]						
W7	Intensely weathered	Discoloration or oxidation throughout; all feldspars and Fe-Mg minerals are altered to clay to some extent; or chemical alteration produces in-situ disaggregation, see grain boundary conditions.	All fracture surfaces are discolored or oxidized, surfaces friable.	Partial separation, rock is friable; in semiarid conditions granitics are disaggregated.	Texture altered by chemical disintegration (hydration, argillation).	Leaching of soluble minerals may be complete.	Dull sound when struck with hammer, usually can be broken with moderate to heavy manual pressure or by light hammer blow without reference to planes of weakness such as incipient or hairline fractures, or veinlets. Rock is significantly weakened. Usually common excavation.
W8	Very intensely weathered						
W9	Decomposed	Discolored or oxidized throughout, but resistant minerals such as quartz may be unaltered; all feldspars and Fe-Mg minerals are completely altered to clay.		Complete separation of grain boundaries (disaggregated).	Resembles a soil, partial or complete remnant rock structure may be preserved; leaching of soluble minerals usually complete.		Can be granulated by hand. Always common excavation. Resistant minerals such as quartz may be present as "stringers" or "dikes."

Note: This chart and its horizontal categories are more readily applied to rocks with feldspars and mafic minerals. Weathering in various sedimentary rocks, particularly limestones and poorly indurated sediments, will not always fit the categories established. This chart and weathering categories may have to be modified for particular site conditions or alteration such as hydrothermal effects; however, the basic framework and similar descriptors are to be used.

[C] Combination descriptors are permissible where equal distribution of both weathering characteristics are present over significant intervals or where characteristics present are "in between" the diagnostic feature. However, dual descriptors should not be used where significant, identifiable zones can be delineated. When given as a range only two adjacent terms may be combined. "Decomposed to slightly weathered," or "moderately weathered to fresh" are not acceptable.

† Does not include directional weathering along shears or faults and their associated features. For example, a shear zone that carried weathering to great depths into a fresh rock mass would not require the rock mass to be classified as weathered.

§ These are generalizations and should not be used as diagnostic features for weathering or excavation classification. These characteristics vary to a large extent based on naturally weak materials or cementation and type of excavation.

FRACTURE DENSITY

Modified from United States Bureau of Reclamation, Engineering Geology Field Manual.

FRACTURE DENSITY- Based on the spacing of all natural fractures in an exposure or core recovery lengths in boreholes; excludes mechanical breaks, shears, and shear zones; however, shear-disturbed zones (fracturing outside the shear) are included. Descriptors for fracture density apply to all rock exposures such as tunnel walls, dozer trenches, outcrops, or foundation cut slopes and inverts, as well as boreholes. Descriptive criteria presented below are based on borehole cores where lengths are measured along the core axis, for other exposures the criteria is distance measured between fractures (size of blocks).

UNFRACTURED (FD0): No fractures.

VERY SLIGHTLY FRACTURED (FD1): Core recovered mostly in lengths greater than 1 m.

SLIGHTLY TO VERY SLIGHTLY FRACTURED (FD2)*

SLIGHTLY FRACTURED (FD3): Core recovered mostly in lengths from 300 to 1000 mm, with few scattered lengths less than 300 mm or greater than 1000 mm.

MODERATELY TO SLIGHTLY FRACTURED (FD4)*

MODERATELY FRACTURED (FD5): Core recovered mostly in 100 to 300 mm lengths with most lengths about 200 mm.

INTENSELY TO MODERATELY FRACTURED (FD6)*

INTENSELY FRACTURED (FD7): Lengths average from 30 to 100 mm with scattered fragmented intervals. Core recovered mostly in lengths less than 100 mm.

VERY INTENSELY TO INTENSELY FRACTURED (FD8)*

VERY INTENSELY FRACTURED (FD9): Core recovered mostly as chips and fragments with a few scattered short core lengths.

* Combinations of fracture densities (e.g. very intensely to intensely fractured, or moderately to slightly fractured) are used where equal distribution of both fracture density characteristics are present over a significant interval or exposure, or where characteristics are "in between" the descriptor definitions.

ROCK HARDNESS DESCRIPTORS

Alphanumeric Descriptor	Descriptor	Criteria
H1	Extremely hard	Core, fragment, or exposure cannot be scratched with knife or sharp pick; can only be chipped with repeated heavy hammer blows.
H2	Very hard	Cannot be scratched with knife of sharp pick. Core or fragment breaks with repeated heavy hammer blows.
H3	Hard	Can be scratched with knife or sharp pick with difficulty (heavy pressure). Heavy hammer blow required to break specimen.
H4	Moderately hard	Can be scratched with knife or sharp pick with light or moderate pressure. Core or fragment breaks with moderate hammer blow.
H5	Moderately soft	Can be grooved 2 mm deep by knife or sharp pick with moderate or heavy pressure. Core or fragment breaks with light hammer blow or heavy manual pressure.
H6	Soft	Can be grooved or gouged easily by knife or sharp pick with light pressure, can be scratched with fingernail. Breaks with light to moderate manual pressure.
H7	Very soft	Can be readily incented, grooved or gouged with fingernail, or carved with a knife. Breaks with light manual pressure.

Any bedrock unit softer than H7, very soft, is to be described using ASTM D-2488 consistency descriptors.

Note: Although "sharp pick" is included in these definitions, descriptions of ability to be scratched, grooved or gouged by a knife is the preferred criteria.

Modified from United States Bureau of Reclamation, Engineering Geology Field Manual.

ROCK QUALITY DESIGNATION (RQD) & PERCENT RECOVERY (REC) LOGGING

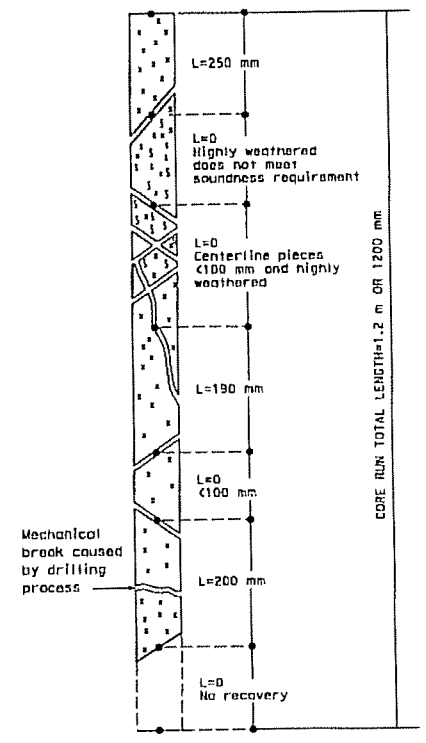

RQD (ROCK QUALITY DESIGNATION)	DESCRIPTION OF ROCK QUALITY
0 - 25%	VERY POOR
25 - 50%	POOR
50 - 75%	FAIR
75 - 90%	GOOD
90 - 100%	EXCELLENT

REC = Percent Core Recovery

$$REC = \frac{\sum \text{Length of all core pieces}}{\text{Total core run length}}$$

$$RQD = \frac{\sum \text{Length of sound core pieces} \geq 100\text{ mm}}{\text{Total core run length}}$$

$$RQD = \frac{250+190+200}{1200} \times 100\%$$

RQD = 53% (fair)

(No Scale)
After Deere & Deere, 1989

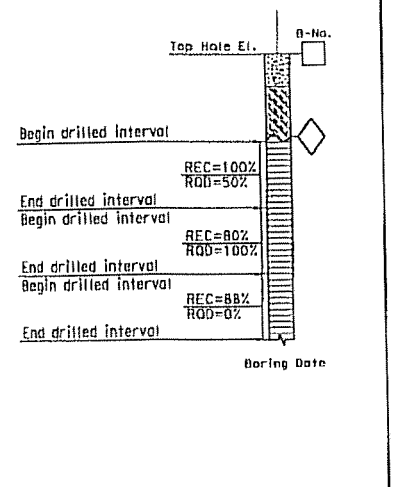

BEDDING, FOLIATION, OR FLOW TEXTURE DESCRIPTORS

Descriptors	Thickness / Spacing
Massive	Greater than 3 m
Very thickly (bedded, foliated, or banded)	1 to 3 m
Thickly	300 mm to 1 m
Moderately	100 to 300 mm
Thinly	30 to 100 mm
Very thinly	10 to 30 mm
Laminated (intensely foliated or banded)	Less than 10 mm

Modified from United States Bureau of Reclamation, Engineering Geology Field Manual.

DESIGN OVERSIGHT	DRAWN BY	J. CASTLE	11/28/06
SIGN OFF DATE	CHECKED BY	M. KAPUSKAR	11/28/06
	NA		
	FIELD INVESTIGATION BY:		
	DATE:	NA	

PREPARED FOR THE STATE OF CALIFORNIA DEPARTMENT OF TRANSPORTATION

M. KAPUSKAR
PROJECT ENGINEER

DIST	COUNTY	ROUTE	TOTAL PROJECT		
04	SF	80			

Caltrans Metric

CONTRACT NO. 04-0120R4

CONTRACT CHANGE ORDER NO 101

SHEET 49 OF 51

GEOTECHNICAL PROFESSIONAL 10/17/07

PLANS APPROVAL DATE

The State of California or its officers or agents shall not be responsible for the accuracy or completeness of electronic copies of this plan sheet.

REGISTERED PROFESSIONAL ENGINEER — MIKE KAPUSKAR — NO. GE 2564 EXP. 12-31-08 — GEOTECHNICAL — STATE OF CALIFORNIA

FUGRO-EARTH MECHANICS, J.V.
7750 Pardee Lane, Suite 120
Oakland, CA 94621

BRIDGE NO. 34-0006
KILOMETER POST

WEST TIE IN PHASE 1
YBI VIADUCT - WESTBOUND ONRAMP
LOG OF TEST BORINGS NO. 1

DISREGARD PRINTS BEARING EARLIER REVISION DATES →

REVISION DATES (PRELIMINARY STAGE ONLY)

SHEET 10 OF 12

ORIGINAL SCALE IN MILLIMETERS FOR REDUCED PLANS 0 10 20 30 40 50 60 70 80 90 100

CU 04251
EA 0120R1

FILE => 01-34-0006-z-lltb01.dgn

TECHNICAL LOG OF TEST BORINGS SHEET (METRIC) (REV 2/1/00)

USERNAME => gbouzo DATE PLOTTED => 29-OCT-2007 TIME PLOTTED => 15:27

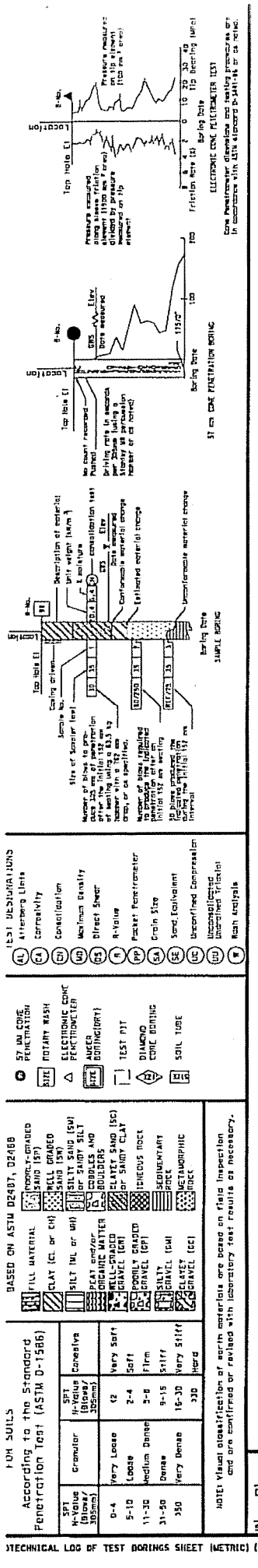

NOTE: Visual classification of earth materials are based on field inspection and are confirmed or revised with laboratory test results as necessary.

℄ WB On-Ramp Bent

TO SAN FRANCISCO

"WM" Line

50+00

06-1

06-2

51+00

"WB" Line

TO OAKLAND

℄ Bent 39

℄ Bent 40

℄ Bent 41

℄ Bent 42

℄ Bent 43

℄ Bent 44

PLAN
1:500

"WM" Line
STA 50+27.1±;11.9 m LT±

"WM" Line
STA 50+39.9±;11.9 m LT±

06-1

06-2

El. +57.2± m

El. +57.3± m

ELEVATION (m)

+58 +56 +54 +52 +50 +48 +46 +44 +42 +40 +38 +36 +34 +32 +30

+28

REC=0%

REC=22% RQD=0%

REC=65% RQD=0%

REC=73% RQD=0%

REC=100% RQD=0%

REC=100% RQD=7%

REC=100% RQD=17%

REC=100% RQD=15%

REC=100% RQD=0%

REC=90% RQD=15%

REC=85% RQD=7%

REC=100% RQD=33%

FRANCISCAN FORMATION (Jkf)
SANDSTONE (Graywacke) (Rx): brown-orange to blue-green-dark gray, decomposed sand and clay, soft, fine to medium grained, subangular to subrounded, no bedding

soft, dark brown to medium brown, fine to very fine grained SANDY CLAY

light yellowish brown, decomposed, highly weathered, soft, no bedding, 25 to 50 mm thick section of brown-orange to light brown, moderately weathered, hard, fine to medium grained SANDSTONE

light yellowish brown to orange brown, highly weathered, very soft to moderately soft, incipient fractures/fissures at 45°

light brown, moderately weathered, moderately hard to hard, moderately fractured, with zones of shearing and intense fracturing, smooth to rough, thin to moderately thin fractures with sand and clay filling

light brown to medium brown, fine to medium grained

light brown to greenish brown, highly to intensely fractured

brown to olive brown, hard to very hard, with subangular black siltstone clasts

olive brown to gray brown, hard, moderately fractured with intense fracture zones

green-blue gray, slightly weathered, hard, moderately fractured with zones of intense to moderate fracturing

Terminated at El. +33.7± m
Drilled on 11-08-06

REC=0%

REC=60% RQD=0%

REC=97% RQD=0%

REC=0%

REC=95% RQD=0%

REC=0%

REC=97% RQD=0%

REC=87% RQD=0%

REC=87% RQD=7%

REC=93% RQD=23%

REC=97% RQD=40%

REC=100% RQD=60%

REC=100% RQD=53%

FRANCISCAN FORMATION (Jkf)
SANDSTONE (Graywacke) (Rx): medium brown to light brown, decomposed loose to medium dense poorly graded sand with silt, fine to very fine grained, no bedding

light brown to orange, highly weathered, decomposed, very soft, healed clayey fractures, incipient joints

light brown to light orange brown, highly to very weathered, decomposed, very soft to moderately hard, rough fractures at 45° with thick clay filling

moderately weathered, hard, rough to stepped, moderately thin fractures

medium brown to olive gray, hard to very hard, rough with partially oxidized surfaces, jointing between 25°to 45°

brown to dark olive gray, slightly to moderately weathered, hard to very hard, rough to stepped jointing at 45°

olive to bluish gray, rough to stepped fractures filled with oxidized to thin organic clay, jointing between 45° to 65°

light to dark bluish gray, jointing at 45°

Terminated at El. +32.2± m
Drilled on 11-09-06

PROFILE
VERTICAL 1 : 100
HORIZONTAL 1 : 500

Stationing along "W" Line

50+00 51+00 52+00

Caltrans Metric

DIST	COUNTY	ROUTE	TOTAL PROJECT	NO	SHEETS
04	SF	80			

GEOTECHNICAL PROFESSIONAL 10/17/07

REGISTERED PROFESSIONAL ENGINEER MIKE KAPUSKAR NO. GE 2564 EXP. 12-31-08 GEOTECHNICAL STATE OF CALIFORNIA

PLANS APPROVAL DATE

The State of California or its officers or agents shall not be responsible for the accuracy or completeness of electronic copies of this plan sheet.

FUGRO-EARTH MECHANICS, J.V.
7750 Pardee Lane, Suite 120
Oakland, CA 94621

CONTRACT NO. 04-0120R4

CONTRACT CHANGE ORDER NO 101

SHEET 50 OF 51

DESIGN OVERSIGHT	DRAWN BY	J. FANG 10/16/07	C. DOMROSE	PREPARED FOR THE STATE OF CALIFORNIA DEPARTMENT OF TRANSPORTATION	M. KAPUSKAR PROJECT ENGINEER
SIGN OFF DATE	CHECKED BY	M. KAPUSKAR 10/17/07	FIELD INVESTIGATION BY: DATE: AS NOTED		

BRIDGE NO.	WEST TIE IN PHASE 1
34-0006	YBI VIADUCT - WESTBOUND ONRAMP
KILOMETER POST NA	LOG OF TEST BORINGS NO. 2

CU 04251
EA 0120R1

DISREGARD PRINTS BEARING EARLIER REVISION DATES →

REVISION DATES (PRELIMINARY STAGE ONLY)

SHEET 11 OF 12

TECHNICAL LOG OF TEST BORINGS SHEET (METRIC) (REV 2/1/00)

ALL DIMENSIONS ARE IN METERS UNLESS OTHERWISE SHOWN

ORIGINAL SCALE IN MILLIMETERS FOR REDUCED PLANS 0 10 20 30 40 50 60 70 80 90 100

FILE => 01-34-0006-z-lltb02.dgn

USERNAME => dsouza DATE PLOTTED => 29-OCT-2007 TIME PLOTTED => 16:27

YERBA BUENA ISLAND

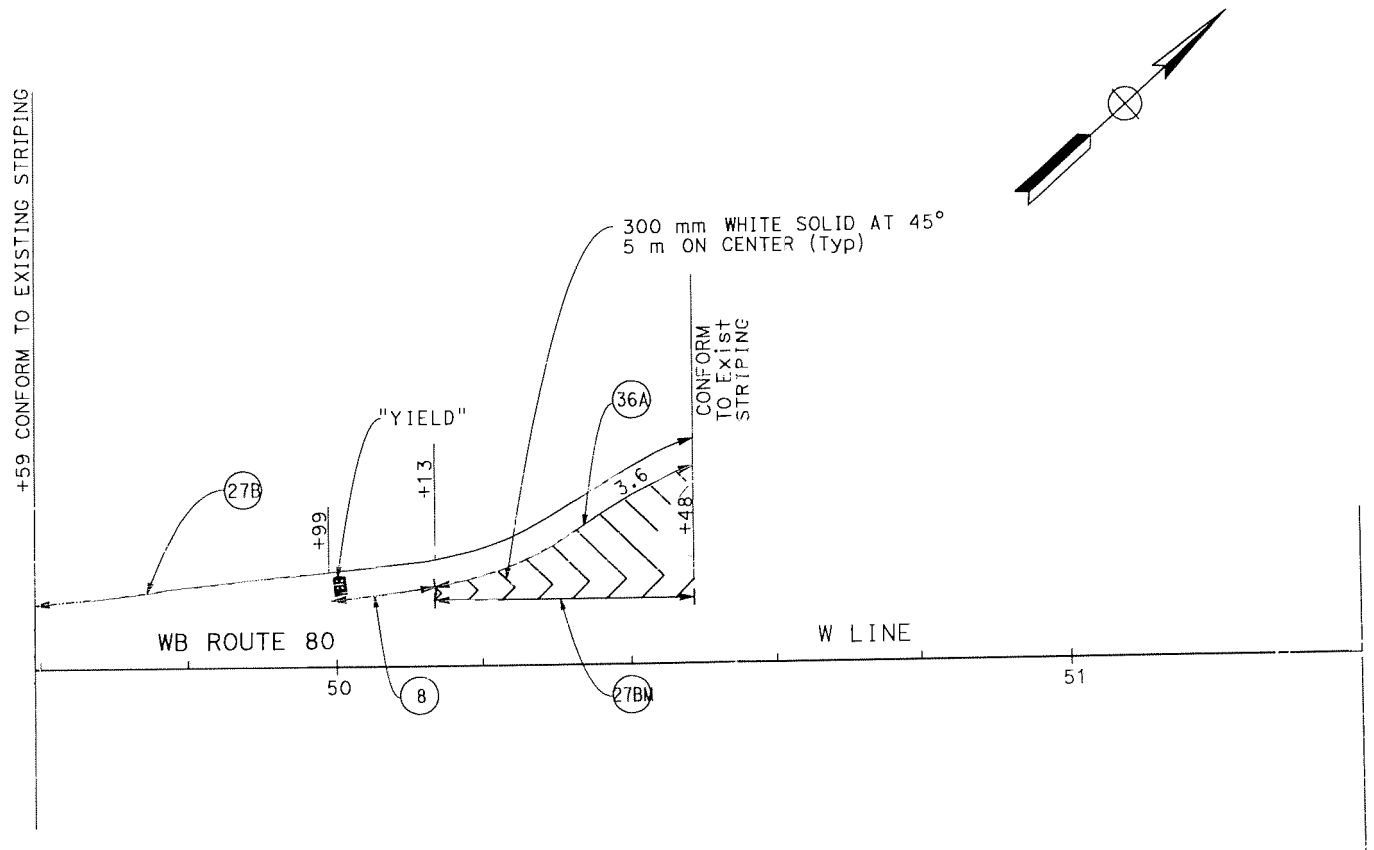

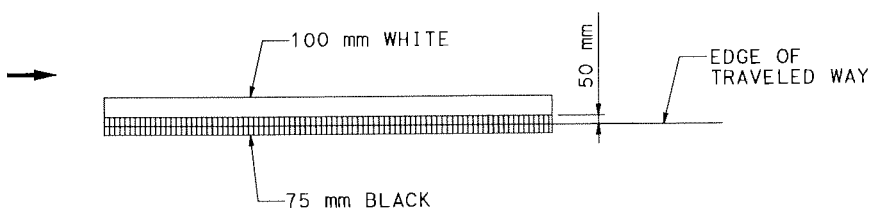

DETAIL 27BM
NO SCALE

PAVEMENT DELINEATION QUANTITIES

SHEET NO.	STATION LIMITS	DETAIL NO. OR PAVEMENT MARKING	PAVEMENT MARKERS RETROREFLECTIVE	THERMOPLASTIC TRAFFIC STRIPES 100 mm WHITE	PAINT TRAFFIC STRIPE (1-COAT) 75 mm	PAINT TRAFFIC STRIPE (2-COAT) 100 mm	PAINT TRAFFIC STRIPE (2-COAT) 200 mm	PAINT PAVEMENT MARKING (2-COAT)
			TYPE G	BROKEN 10.36-4.28	BLACK SOLID	WHITE SOLID	WHITE SOLID	
			EA	M	M	M	M	M2
PD-1	W 49+59 TO W 50+48	27B				93		
PD-1	W 50+13 TO W 50+48	27BM			35	35		
PD-1	W 50+13 TO W 50+48	36A	7				39	
PD-1	W 49+99 TO W 50+13	8		14				
PD-1	W 49+99	"YIELD"						2.23
PD-1	W 49+99 TO W 50+48	300 mm WHITE SOLID						25.63
		TOTAL	7	14	35	128	39	27.86

DIST	COUNTY	ROUTE	KILOMETER POST TOTAL PROJECT	SHEET No	TOTAL SHEETS
04	SF	80	12.6/13.9		

REGISTERED CIVIL ENGINEER DATE

REGISTERED PROFESSIONAL ENGINEER — JOHNNY KUO — No. 60036 — Exp. 06-30-08 — CIVIL — STATE OF CALIFORNIA

PLANS APPROVAL DATE

PB AMERICAS, INC.
303 Second St., Suite 700N
San Francisco, CA 94107-1317

The State of California or its officers or agents shall not be responsible for the accuracy or completeness of electronic copies of this plan sheet.

Caltrans now has a web site! To get to the web site, go to http://www.dot.ca.gov

CONTRACT NO. 04-0120R4

CONTRACT CHANGE ORDER NO 101

SHEET 51 OF 51

LEGEND:

(No.) PAVEMENT DELINEATION NUMBER

CHANGE IN PAVEMENT DELINEATION DETAIL

ALL DIMENSIONS ARE IN METERS UNLESS OTHERWISE SHOWN

PAVEMENT DELINEATION PLAN
West Bound On Ramp

SCALE: 1:500

THIS PLAN ACCURATE FOR PAVEMENT DELINEATION WORK ONLY

PD-1

DATE	REVISED BY	DATE REVISED

CALCULATED/DESIGNED BY
CHECKED BY

STATE OF CALIFORNIA - DEPARTMENT OF TRANSPORTATION
Caltrans

DESIGN OVERSIGHT
Bob Zandipour

LAST REVISION 00-00-00
DATE PLOTTED => $DATE
TIME PLOTTED => $TIME

FOR REDUCED PLANS ORIGINAL SCALE IS IN MILLIMETERS 0 20 40 60 80

DGN FILE => $REQUEST
USERNAME => $USER

CU 04251

EA 0120T1

STATE OF CALIFORNIA - DEPARTMENT OF TRANSPORTATION

CONTRACT CHANGE ORDER MEMORANDUM

DATE: 2/28/2008

RECEIVED

TO: MIKE FORNER / DENNIS TURCHON

FILE: E.A. 04 - 0120R4

CO-RTE-PM SF-80-12.6/13.2 007645 JUN 20 08

FROM: BILL CASEY

FED. NO. ACBRIM-080-1(097)N

CCO#: **101**	SUPPLEMENT#: **0**	Category Code: **AXZZ**	CONTINGENCY BALANCE (incl. this change) **$73,289,938.82**
COST: **$846,140.00**	INCREASE ☑ DECREASE ☐		HEADQUARTERS APPROVAL REQUIRED? ☑ YES ☐ NO
SUPPLEMENTAL FUNDS PROVIDED: **$0.00**			IS THIS REQUEST IN ACCORDANCE WITH ENVIRONMENTAL DOCUMENTS? ☑ YES ☐ NO

CCO DESCRIPTION:
WTI Phase 1 WB On-Ramp

PROJECT DESCRIPTION:
CONSTRUCT ROUTE 80 TEMP BYPASS STRUCTURE

Original Contract Time:	Time Adj. This Change:	Previously Approved CCO Time Adjustments:	Percentage Time Adjusted: (including this change)	Total # of Unreconciled Deferred Time CCO(s): (including this change)
475 Day(s)	**0** Day(s)	**1195** Day(s)	**252** %	**7**

THIS CHANGE ORDER PROVIDES FOR:

The reconstruction of the Yerba Buena Island Westbound I-80 onramp of the San Francisco Oakland Bay Bridge.

This project, the Temporary Bypass Structure (TBS), was awarded in March 2004 to construct a detour that will allow for the tie in of the new east span of the San Francisco Oakland Bay Bridge to Yerba Buena Island. The TBS encompasses three main structures, the East Tie-In (ETI) to the existing bridge, the West Tie-In (WTI) to Yerba Buena Island, and the Viaduct structure between the two tie ins.

The original contract was awarded as a performance based contract with the contractor responsible for the design of the structures based upon certain design criteria. The Department issued a December 14, 2006 memo entitled Strategy for South-South Detour Contract Completion which was approved by Tony Anziano - Toll Bridge Program Manager, Richard Land - Chief Engineer, and the Toll Bridge Program Oversight Committee (TBPOC). This memo recommended that the planned retrofit of the 350-foot section of the concrete deck approaching the Yerba Buena Island Tunnel be re-sequenced to be performed within this TBS project as opposed to being performed on a future contract after the traffic switch onto the new SFOBB east span.

The retrofit of this structure was performed under various other contract change orders which culminateed with the 2007 Labor Day Weekend closure of the SFOBB that allowed for the demolition of the existing structure and the roll in of the retrofitted structure. This change order shall complete the scope of the retrofit work by reconstructing the onramp from Yerba Buena Island onto westbound I-80. The onramp was demolished in order to allow for the construction of the retrofitted upper deck 350-foot section of bridge.

The work performed under this change order includes the demolition of portions of the remaining onramp structure, the placement of CIDH piles, bridge columns, and a concrete slab deck, along with the installation of concrete barriers, metal beam guard railing, asphalt concrete and pavement delineation. Electrical work associated with the onramp, including the installation of several light standards, shall be addressed under a separate change order as the design for this work is still being finalized.

Compensation for this work shall be paid as extra work at an agreed lump sum of $ 846,140.00, which shall be financed from the contract's contingency funds. A cost analysis is on file.

No adjustment of contract time is warranted as the change will not affect the controlling operation.

This change was concurred by Alec Melkonians - Asst. Project Manager, Hong Wong - Project Engineer, and Lina Ellis - Structures Maintenance, and Robert Kobal - HQ Assistant Construction Coordinator.

ADA Notice: For individuals with sensory cisabilities, this document is available in alternate formats. For information call: (916) 654-6410 or TDD (916) 654-3880 or write Records and Forms Management, 1120 N Street, MS-89, Sacramento, CA 95814.

CONCURRED BY:			
Construction Engineer:	Raoul Maltez, Senior TE	Date	
Bridge Engineer:		Date	
Project Engineer:	Hong Wong, PE	Date	3/19/08
Project Manager:	Alec Melkonians	Date	3/19/08
FHWA Rep.:		Date	
Environmental:		Date	
Other (specify):	Lina Ellis, Maintenance	Date	3/24/08
Other (specify):	Robert Kobal, HQ Asst.Const.Coor	Date	3/21/08
District Prior Approval By:		Date	
HQ (Issue Approve) By:	Ken Darby, HQ CCO Engineer	Date	
Resident Engineer's Signature:		Date	

3-25-08

ESTIMATE OF COST

	THIS REQUEST	TOTAL TO DATE
ITEMS	$0.00	$0.00
FORCE ACCOUNT	$0.00	$0.00
AGREED PRICE	$846,140.00	$846,140.00
ADJUSTMENT	$0.00	$0.00
TOTAL	$846,140.00	$846,140.00

FEDERAL PARTICIPATION

☐ PARTICIPATING ☐ PARTICIPATING IN PART ☐ NONE
☐ NON-PARTICIPATING (MAINTENANCE) ☑ NON-PARTICIPATING

FEDERAL SEGREGATION (if more than one Funding Source or P.I.P. type)
☑ CCO FUNDED PER CONTRACT ☐ CCO FUNDED AS FOLLOWS

FEDERAL FUNDING SOURCE	PERCENT

ADA Notice: For individuals with sensory cisabilities, this document is available in alternate formats. For information call: (916) 654-6410 or TDD (916) 654-3880 or write Records and Forms Management, 1120 N Street, MS-89, Sacramento, CA 95814.

STATE OF CALIFORNIA - DEPARTMENT OF TRANSPORTATION

CONTRACT CHANGE ORDER

Change Requested by: Engineer

CCO 101	Suppl. No. 1	Contract No. 04 - 0120R4	Road SF-80-12.6/13.2	FED. AID LOC.: ACBRIM-080-1(097)N

To: CC MYERS INC

You are directed to make the following changes from the plans and specifications or do the following described work not included in the plans and specifications for this contract. ***NOTE: This change order is not effective until approved by the Engineer.***

Description of work to be done, estimate of quantities and prices to be paid. (Segregate between additional work at contract price, agreed price and force account.) Unless otherwise stated, rates for rental of equipment cover only such time as equipment is actually used and no allowance will be made for idle time. This last percentage shown is the net accumulated increase or decrease from the original quantity in the Engineer's Estimate.

Extra Work at Lump Sum:

As authorized by the Engineer and as shown on Sheets 2 through 5 of this change, perform the following supplemental work not identified in the original Contract Change Order No. 101 for the construction of the Westbound I-80 Yerba Buena Island On-Ramp.

1. Grind and pave 1 1/2" asphalt concrete pavement to conform with the W/B Macalla Road bridge joint
2. Furnish and install electrical lighting
3. Construct a seat extension underneath the WB on-ramp
4. Reconstruct barrier rail @ WB on-ramp

For this work, the Contractor shall be compensated at a lump sum price of $ 149,560.00, which constitutes full and final compensation, for all costs associated with the work of this change.

Total Cost of Extra Work at Lump Sum $149,560.00

Estimated Cost: **Increase** ☑ **Decrease** ☐ **$149,560.00**

By reason of this order the time of completion will be adjusted as follows: 0 days

Submitted by

Signature	Resident Engineer	Date
	BILL CASEY	12-22-08

Approval Recommended by

Signature	Area Construction Manager	Date
Deanna Vilcheck	DEANNA VILCHECK	1/5/09

Engineer Approval by

Signature	Area Construction Manager	Date
Deanna Vilcheck	DEANNA VILCHECK	2/4/09

We the undersigned contractor, have given careful consideration to the change proposed and agree, if this proposal is approved, that we will provide all equipment, furnish the materials, except as may otherwise be noted above, and perform all services necessary for the work above specified, and will accept as full payment therefor the prices shown above.

NOTE: If you, the contractor, do not sign acceptance of this order, your attention is directed to the requirements of the specifications as to proceeding with the ordered work and filing a written protest within the time therein specified.

Contractor Acceptance by

Signature	(Print name and title)	Date
	DANIEL E. HIMICK, PRESIDENT	1/20/09

Revised 7-24-08

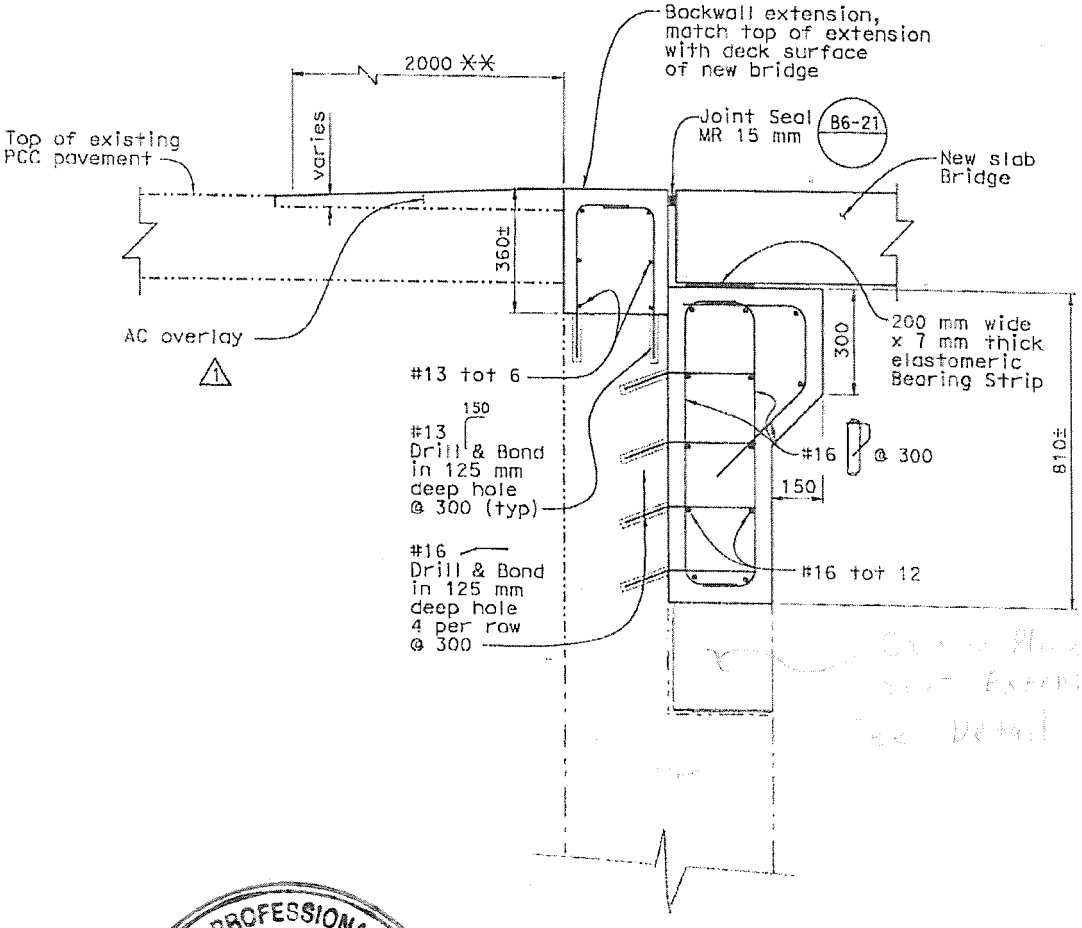

REGISTERED PROFESSIONAL ENGINEER
M. J. CULLEN
No. 040620
Exp. 3-31-09
CIVIL
STATE OF CALIFORNIA

CONTRACT NO. 04-0120R4

CONTRACT CHANGE ORDER NO 101-S1

SHEET 2 OF 5

Detail A

revised 7-24-08

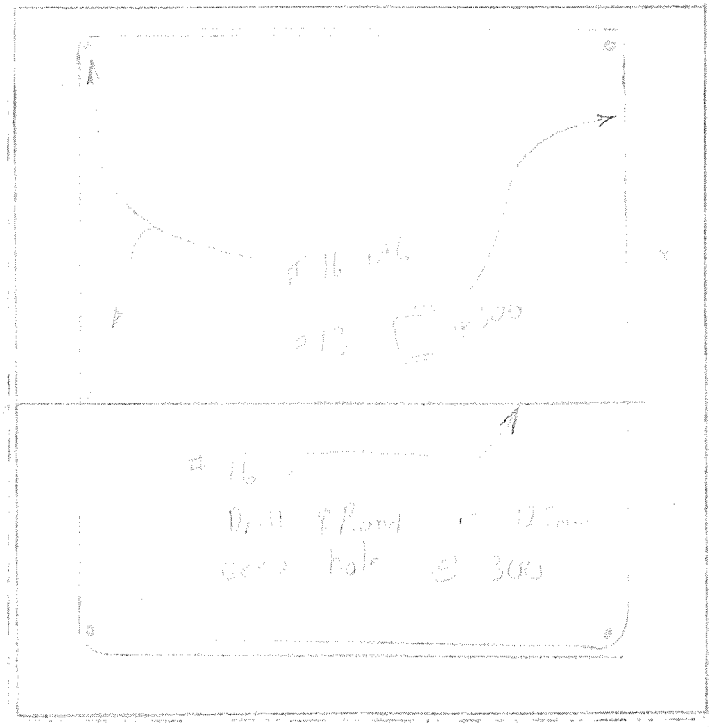

CONTRACT NO. 04-0120R4

CONTRACT CHANGE ORDER NO 101-S1

SHEET 3 OF 5

REGISTERED PROFESSIONAL ENGINEER
M. J. CULLEN
No. 040820
Exp. 3-31-09
CIVIL
STATE OF CALIFORNIA

SHEET INDEX

DRAWING No.	DRAWING TITLE
E-1	ELECTRICAL SHEET INDEX, SYMBOLS, ABBREVIATIONS AND NOTES WESTBOUND ONRAMP LIGHTING YBI VIADUCT-WEST TIE IN PHASE 1
E-2	WESTBOUND ONRAMP LIGHTING YBI VIADUCT-WEST TIE IN PHASE 1

ABBREVIATIONS

NOT LISTED IN CALTRANS STANDARD PLANS ES-1A AND ES-1B

Cont'd	Continued
EB	Eastbound
(E), Exist	Existing
G, GND, Gnd	Ground (ground cable)
GRS	Galvanized Rigid Steel
JB	Junction Box
LVCC	Low Voltage Control Center
LTS, lts	Light
LTFC	Liquid Tight Flexible Conduit
MFR	Manufacturer
mh	Mounting Height
N.E.C.	National Electrical Code
PR	Pair
PWR	Power
SFOBB	San Francisca Oakland Bay Bridge
Term	Terminal
V	Volt
W	Wire
WB	Westbound
YBI	Yerba Buena Island

Caltrans Metric

DIST	COUNTY	ROUTE	KILOMETER POST TOTAL PROJECT	SHEET No	TOTAL SHEETS
04	SF	80	12.6		

Carol Light — REGISTERED ELECTRICAL ENGINEER — 07/31/08 DATE

REGISTERED PROFESSIONAL ENGINEER — CAROL LIGHT — No. 10145 — EXP. 09/30/08 ELECTRICAL — STATE OF CALIFORNIA

PLANS APPROVAL DATE

Pb aMERICAS, INC.
303 Second St., Suite 700N
San Francisco, CA 94107-1317

SILVERMAN & LIGHT
1201 PARK AVENUE - SUITE 100
EMERYVILLE, CA 94608-3632

The State of California or its officers or agents shall not be responsible for the accuracy or completeness of electronic copies of this plan sheet.

Caltrans now has a web site! To get to the web site, go to http://www.dot.ca.gov

CONTRACT NO. 04 - 0120R4

CONTRACT CHANGE ORDER NO 101 SUP.1

SHEET 4 OF 5

GENERAL NOTES

1. Conduit routing is diagramatic. Pull box location shall be located as shown on plans. The contractor shall provide additional pull boxes as required. Exact locations of equipment and devices may be adjusted depending on field conditions or by the engineer.
2. Minimum size of conduit shall be 21C. Exposed conduit shall be PVC coated galvanized rigid steel, and conduits located inside girder shall be galvanized rigid steel.
3. All equipment and devices shall be provided with wire ground.
4. All feeders and branch circuits shall be provided with ground wire.
5. Contractor shall label all conductors and cables per wiring diagrams.
6. All E-sheets ore accurate for electrical work only.
7. All existing equipment shall remain in place unless otherwise noted.
8. Locations of conduits, pull boxes and other equipment shown on the plan are approximate and may be changed to suit field conditions.
9. The contractor shall call Underground Service Alert (USA) at (800) 642-2444, 48 hours prior to all excavation.
10. All exposed circuit or conductor connections shall be protected with a noncorrosion coating.
11. Contractor to verify in field existing circuit prior to cutting and splicing.

SYMBOLS

NOT LISTED IN CALTRANS STANDARD PLANS ES-1A, ES-2B AND ES-1C

- (1) — Sheet Notes, applicable only to the Drawing 1=Sequential number
- [1] — Project notes, applicable for all drawings.
- J — Junction Box, Conduit Fitting
- Call Box
- ——o — Conduit turned up
- ——• — Conduit turned down
- ——— — Conduit or Cable run, exposed
- – – – – Conduit run concealed in wall, concrete barrier, slab or routed underground duct bank
- ~~~ — Armored Cable

LIGHTING POLE IDENTIFICATION

243 - 01 — Roadway Ltg Pole
- 01 — Assigned sequential lighting pole number
- 243 — Assigned circuit number

ELECTRICAL SHEET INDEX, SYMBOLS, AND ABBREVIATIONS WESTBOUND ONRAMP LIGHTING YBI VIADUCT-WEST TIE IN PHASE 1

NO SCALE

E-1

DESIGN OVERSIGHT	CALCULATED/ DESIGNED BY	DRAWN BY	CHECKED BY	DATE REVISED	REVISED BY	DATE
Hong Wong			CL			BJ

STATE OF CALIFORNIA - DEPARTMENT OF TRANSPORTATION — Caltrans

LAST REVISION 00-00-00 — DATE PLOTTED => $DATE — TIME PLOTTED => $TIME

THIS PLAN ACCURATE FOR ELECTRICAL WORK ONLY

FOR REDUCED PLANS ORIGINAL SCALE IS IN MILLIMETERS 0 20 40 60 80

DGN FILE => $REQUEST
USERNAME => $USER

CU 04251

EA 0120P1

FILE: i:\v3\103ms\pss\electrical\com3v13103es1619.dgn
DATE: 11/14/2008 08:54:

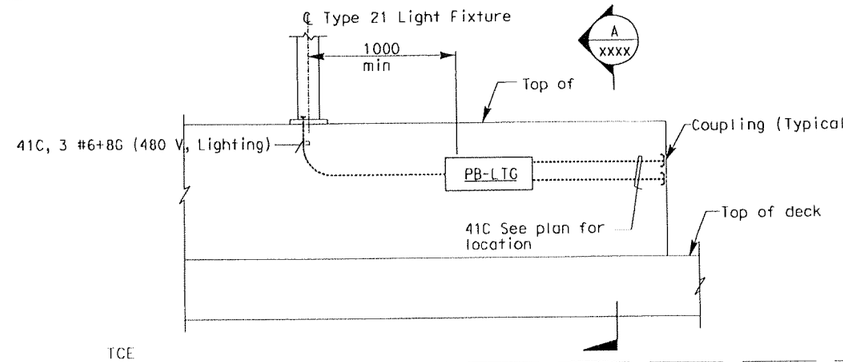

LONGITUDINAL SECTION

TYPICAL CONDUIT ROUTING INSIDE CONCRETE BARRIER
NO SCALE

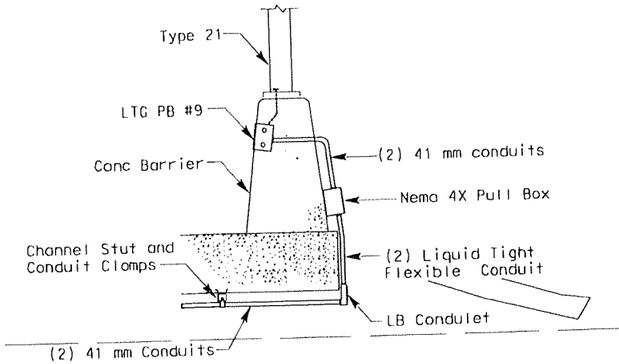

SECTION A

NO SCALE

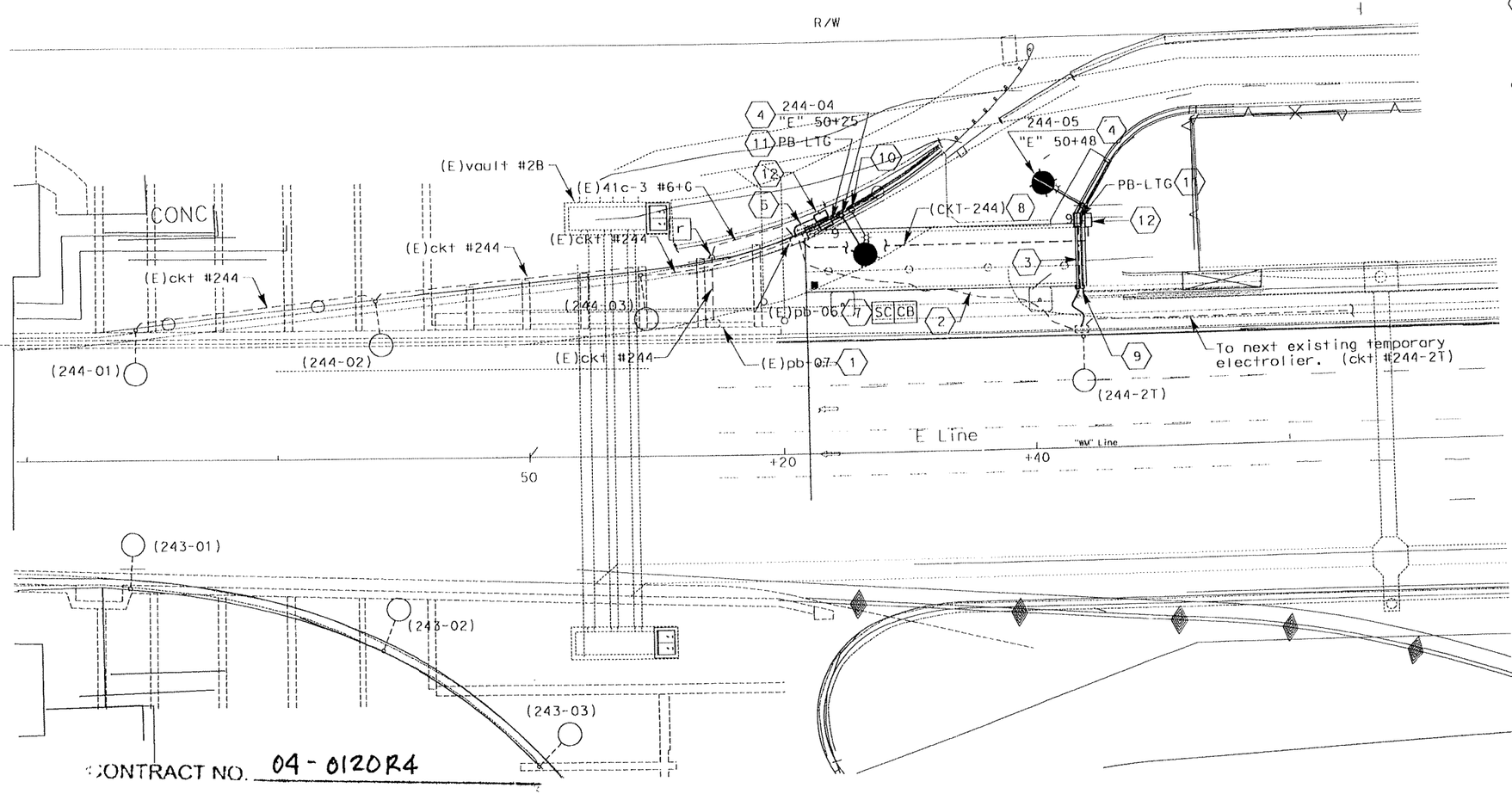

SHEET NOTES

1. Existing PB-07 and it is located on the north retaining wall near Bent #38.
2. Existing armored cable with 3 #6 +8G. At existing pb-06, remove and disconnect cable from existing ckt #244. Reroute existing armored cable to new 41mm conduit and connect to new CKT #244. See note #3 and #9.
3. Install two new 41mm empty conduits and terminate at New pull box #9. Provide conduit couplings flush to end face of the new concrete barrier for future extension. See Caltrans Standard Detail C an ES-9A.
4. Install new standard Type 21 light fixture with 2.4M mast arm mounted an barrier. 300w HPS with integral ballast. See Caltrans standard details ES-6A and ES-6B for more information. Install fused splice connectors in adjacent pull box #9. Install new state furnished numbers.
5. Install new 41mm Liquid Tight Flexible conduit with 3 #6+8G (480V, Lighting).
7. Existing PB-06 and it is located on top of existing concrete railing of upper deck at approximately Sta. "E" 50+25
8. Install new one 41mm conduit with 3 #6+8G (480V, Lighting) and one 41C spare. Route conduits below concrete slab. Securely fasten conduits with "Unistrut P3353" concrete insert and stainless steel conduit clamps. Space conduit support at 3.0 meters on centers.
9. Route existing temporary armored cable (480V, Lighting) ckt #244-2T via one of the two 41mm conduits and PB-LTG and connect to CKT #244.
10. Remove and scrap existing pole base.
11. Install new Type 9 pull box. See Caltrans Standard ES-9C and ES-9D for more information.
12. Install new Nemo Type 4X pull box on the outside face of the concrete railings. Securely fasten using concrete anchors. Install one 41C, 3 #6+8G and one 41C (spare) fram this pull box to pull box 9.

DIST	COUNTY	ROUTE	KILOMETER POST TOTAL PROJECT	SHEET No	TOTAL SHEETS
04	SF	80	12.6		

Carol Light — REGISTERED ELECTRICAL ENGINEER — 07/31/08 DATE

REGISTERED PROFESSIONAL ENGINEER — CAROL LIGHT — No. 10145 — EXP. 09/30/08 ELECTRICAL — STATE OF CALIFORNIA

PLANS APPROVAL DATE

Pb aMERICAS, INC.
303 Second St., Suite 700N
San Francisco, CA 94107-1317

SILVERMAN & LIGHT
1201PARK AVENUE - SUITE 100
EMERYVILLE, CA 94608-3632

The State of California or its officers or agents shall not be responsible for the accuracy or completeness of electronic copies of this plan sheet.

Caltrans now has a web site! To get to the web site, go to http://www.dot.ca.gov

DATE	REVISED BY	DATE REVISED
BJ		CL

CALCULATED/ DESIGNED BY
CHECKED BY

DESIGN OVERSIGHT
Hong Wong

STATE OF CALIFORNIA - DEPARTMENT OF TRANSPORTATION
Caltrans

CONTRACT NO. 04-0120R4

CONTRACT CHANGE ORDER NO 101 Sup. 1

SHEET 5 OF 5

WESTBOUND ONRAMP LIGHTING
YBI VIADUCT-WEST TIE IN PHASE 1

SCALE: 1:200

E-2R1

ALL DIMENSIONS ARE IN METERS UNLESS OTHERWISE SHOWN

THIS PLAN ACCURATE FOR ELECTRICAL WORK ONLY

FOR REDUCED PLANS ORIGINAL SCALE IS IN MILLIMETERS 0 20 40 60 80

DGN FILE => $REQUEST
USERNAME => $USER

CU 04251

EA 0120P1

LAST REVISION 00-00-00
DATE PLOTTED => $DATE
TIME PLOTTED => $TIME

STATE OF CALIFORNIA - DEPARTMENT OF TRANSPORTATION

CONTRACT CHANGE ORDER MEMORANDUM

DATE: 7/31/2008 Page 1 of 1

TO: MIKE FORNER / DEANNA VILCHECK	FILE: E.A. 04 - 0120R4
	CO-RTE-PM SF-80-12.6/13.2
FROM: BILL CASEY	FED. NO. ACBRIM-080-1(097)N
CCO#: 101 SUPPLEMENT#: 1 Category Code: CHPX	CONTINGENCY BALANCE (incl. this change) $80,552,062.14
COST: $149,560.00 INCREASE ☑ DECREASE ☐	HEADQUARTERS APPROVAL REQUIRED? ☐ YES ☑ NO
SUPPLEMENTAL FUNDS PROVIDED: $0.00	IS THIS REQUEST IN ACCORDANCE WITH ENVIRONMENTAL DOCUMENTS? ☑ YES ☐ NO
CCO DESCRIPTION: WB On-ramp Supplemental Work	**PROJECT DESCRIPTION:** CONSTRUCT ROUTE 80 TEMP BYPASS STRUCTURE

Original Contract Time:	Time Adj. This Change:	Previously Approved CCO Time Adjustments:	Percentage Time Adjusted: (including this change)	Total # of Unreconciled Deferred Time CCO(s): (including this change)
475 Day(s)	0 Day(s)	1195 Day(s)	252 %	7

THIS CHANGE ORDER PROVIDES FOR:

Performing supplemental work not identified in the original Contract Change Order No. 101 for the construction of the Westbound I-80 Yerba Buena Island On-Ramp. The work includes grinding and paving 1 1/2" asphalt concrete pavement; furnishing and installing electrical lighting; constructing a seat extension; and reconstructing barrier rail.

The Original Contract Change Order No. 101 calls for the reconstruction of the Yerba Buena Island WB I-80 on-ramp of the San Francisco - Oakland Bay Bridge (SFOBB). The existing on-ramp was demolished in order to allow for the roll in of the new upper deck 350 foot section of the SFOBB during the 2007 Labor Day Weekend closure.

This change is necessary to complete the final phase of the construction of westbound I-80 on-ramp. This scope of work was not identified in the original contract change order until construction of the ramp was already in progress.

The Contractor shall be compensated on Extra Work at Lump Sum price of $ 149,560.00, which shall be financed from the contract's contingency funds. A cost analysis is on file.

There will be no time adjustment due to this change since it does not affect the controlling operation of the project.

Patrick Treacy, HQ Const. Coordinator, Alec Melkonians, Project Manager, and Robert Kobal, District Senior Representative concurred on this change order.

CONCURRED BY:		
Construction Engineer:	Robert Kobal, Dist Senior Rep	Date 12/4/08
Bridge Engineer:		Date
Project Engineer:	Hong Wong, PE	Date 12/18/08
Project Manager:	Alec Melkonians	Date 12/3/08
FHWA Rep.:		Date
Environmental:		Date
Other (specify):	Patrick Treacy, HQ Asst.Const.Co	Date 12/6/08
Other (specify):		Date
District Prior Approval By:		Date
HQ (Issue Approve) By:		Date
Resident Engineer's Signature:		Date 1-2-09

ESTIMATE OF COST

	THIS REQUEST	TOTAL TO DATE
ITEMS	$0.00	$0.00
FORCE ACCOUNT	$0.00	$0.00
AGREED PRICE	$149,560.00	$995,700.00
ADJUSTMENT	$0.00	$0.00
TOTAL	$149,560.00	$995,700.00

FEDERAL PARTICIPATION

☐ PARTICIPATING ☐ PARTICIPATING IN PART ☑ NONE
☐ NON-PARTICIPATING (MAINTENANCE) ☐ NON-PARTICIPATING

FEDERAL SEGREGATION (if more than one Funding Source or P.I.P. type)
☐ CCO FUNDED PER CONTRACT ☐ CCO FUNDED AS FOLLOWS

FEDERAL FUNDING SOURCE	PERCENT

ADA Notice: For individuals with sensory disabilities, this document is available in alternate formats. For information call: (916) 654-6410 or TDD (916) 654-3880 or write Records and Forms Management, 1120 N Street, MS-89, Sacramento, CA 95814.

STATE OF CALIFORNIA - DEPARTMENT OF TRANSPORTATION

CONTRACT CHANGE ORDER

Change Requested by: Engineer

CCO 102	Suppl. No. 0	Contract No. 04 - 0120R4	Road SF-80-12.6/13.2	FED. AID LOC.: ACBRIM-080-1(097)N

To: CC MYERS INC

You are directed to make the following changes from the plans and specifications or do the following described work not included in the plans and specifications for this contract. ***NOTE: This change order is not effective until approved by the Engineer.***

Description of work to be done, estimate of quantities and prices to be paid. (Segregate between additional work at contract price, agreed price and force account.) Unless otherwise stated, rates for rental of equipment cover only such time as equipment is actually used and no allowance will be made for idle time. This last percentage shown is the net accumulated increase or decrease from the original quantity in the Engineer's Estimate.

Extra Work at Force Account:

As authorized by the Engineer and as shown on Sheets 2 through 6 of this change order, construct drainage measures at the northside (West Tie-In) of the existing San Francisico - Oakland Bay Bridge between Bents 39 and 48.

Compensation for this work will be paid for as extra work as provided for in Section 5-1.24 "Force Account Payment" of the Special Provisions, and Section 4-1.03D "Extra Work" of the Standard Specifications.

Estimated Cost of Extra Work at Force Account $60,000.00

RECEIVED 010666 JUL -3 08

RECEIVED 010635 JUN 29 08

Estimated Cost: Increase ☑ Decrease ☐ **$60,000.00**

By reason of this order the time of completion will be adjusted as follows: 0 days

Submitted by

Signature	Resident Engineer	Date
[signature]	BILL CASEY	3-4-08

Approval Recommended by

Signature	Area Construction Manager	Date
[signature]	DENNIS TURCHON	3/7/08

Engineer Approval by

Signature	Area Construction Manager	Date
[signature]	DENNIS TURCHON	4/4/08

We the undersigned contractor, have given careful consideration to the change proposed and agree, if this proposal is approved, that we will provide all equipment, furnish the materials, except as may otherwise be noted above, and perform all services necessary for the work above specified, and will accept as full payment therefor the prices shown above.

NOTE: If you, the contractor, do not sign acceptance of this order, your attention is directed to the requirements of the specifications as to proceeding with the ordered work and filing a written protest within the time therein specified.

Contractor Acceptance by

Signature	(Print name and title)	Date
[signature]	DEWEY C. LEE JR. Contract Manager	3/27/08

04	SF	80	12.6/13.2	

REGISTERED CIVIL ENGINEER

PLANS APPROVAL DATE

The State of California or its officers or agents shall not be responsible for the accuracy or completeness of electronic copies of this plan sheet.

To get to the Caltrans web site, go to: http://www.dot.ca.gov

Caltrans Metric

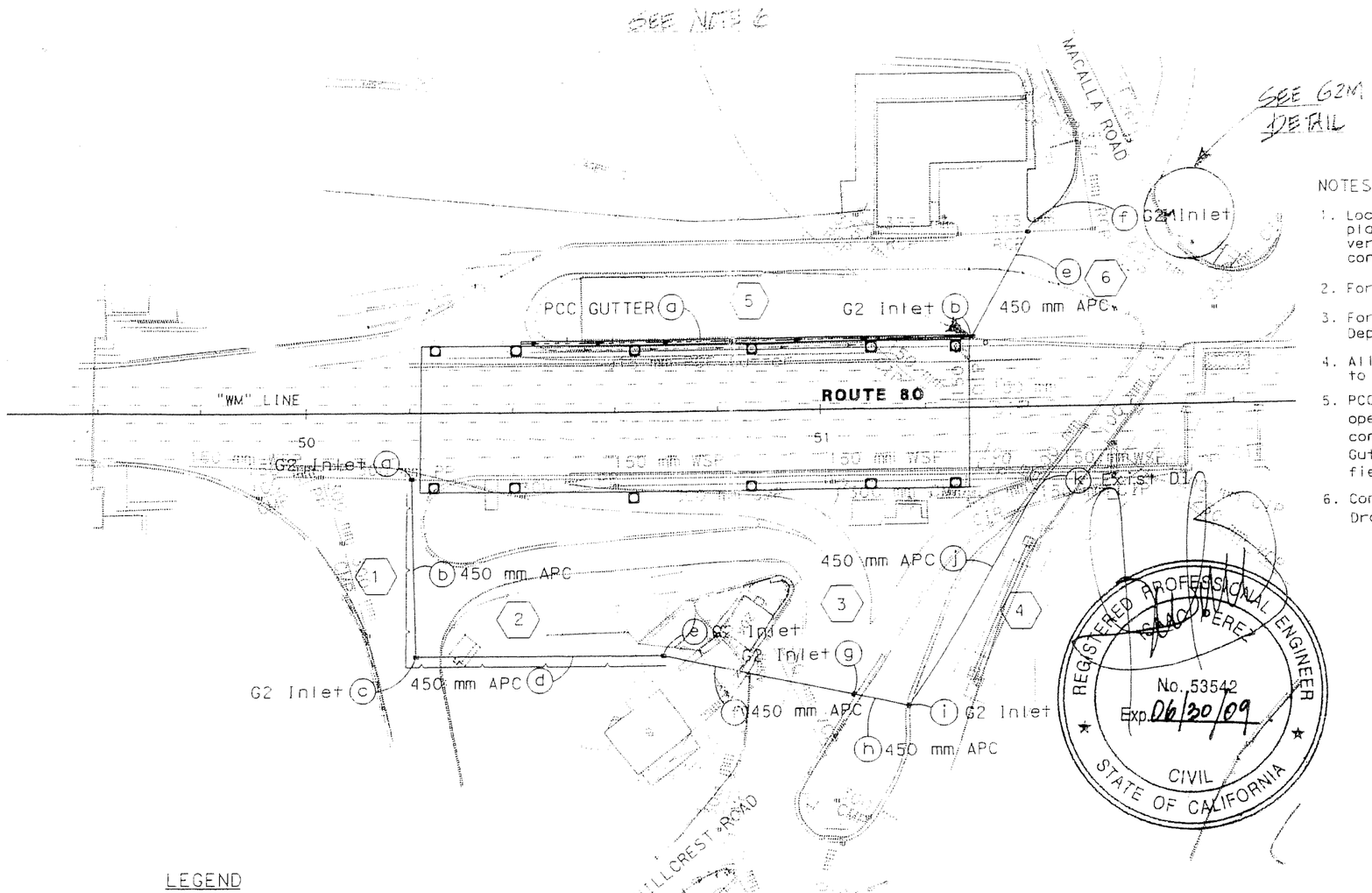

NOTES:

1. Location of existing utilities on these plans are approximate and shall be field verified by the Contractor prior to construction.
2. For details not shown see Standard Plans.
3. For inlets within the roadbed use Gutter Depression. See Standard Plan D78.
4. All DI ties are horizontal distances to the center of grate.
5. PCC Gutter (see D-5) shall begin at wall opening (11m ± Lt WM 50+20±) and connect to PCC Gutter (D.S. 5a) Gutter slope shall be dictated by exist field conditions.
6. Connect exist downspout from Bent 48 to Drain Item 5b (see D-5) at FL 49.000

REGISTERED PROFESSIONAL ENGINEER
No. 53542
Exp. 06/30/09
CIVIL
STATE OF CALIFORNIA

LEGEND

(X) DRAINAGE SYSTEM No.

(x) DRAINAGE UNIT No.

GUTTER FLOW LINE

DS DRAINAGE SYSTEM

CONTRACT NO. 04-0120R4

CONTRACT CHANGE ORDER NO 102

SHEET 2 OF 6

THIS PLAN ACCURATE FOR DRAINAGE WORK ONLY.

All Dimensions are in Meters unless otherwise shown

DRAINAGE PLAN

SCALE: 1:500

Contract Change Order No. ___

Sheet No. ___ Of ___

D-1

STATE OF CALIFORNIA - DEPARTMENT OF TRANSPORTATION

Caltrans

PROJECT ENGINEER C. HONG WONG

CALCULATED/DESIGNED BY | CHECKED BY

DATE | REVISED BY | DATE REVISED

U:\gf\PROJECTS\YB1\10-4-07\CCO-Drainage_070125 - Proposed drainage.dgn

RELATIVE BORDER SCALE 0 20 40 60 80

USERNAME => gtong

CU 00000

EA 0120R4

LAST REVISION 02-06-07 DATE PLOTTED => 18-OCT-2007

DIST	COUNT	ROUTE	KILOMETER POST TOTAL PROJECT	SHEET No.	TOTAL SHEETS
04	SF	80	12.6/13.2		

Caltrans Metric

REGISTERED CIVIL ENGINEER

PLANS APPROVAL DATE

The State of California or its officers or agents shall not be responsible for the accuracy or completeness of electronic copies of this plan sheet.

To get to the Caltrans web site, go to: http://www.dot.ca.gov

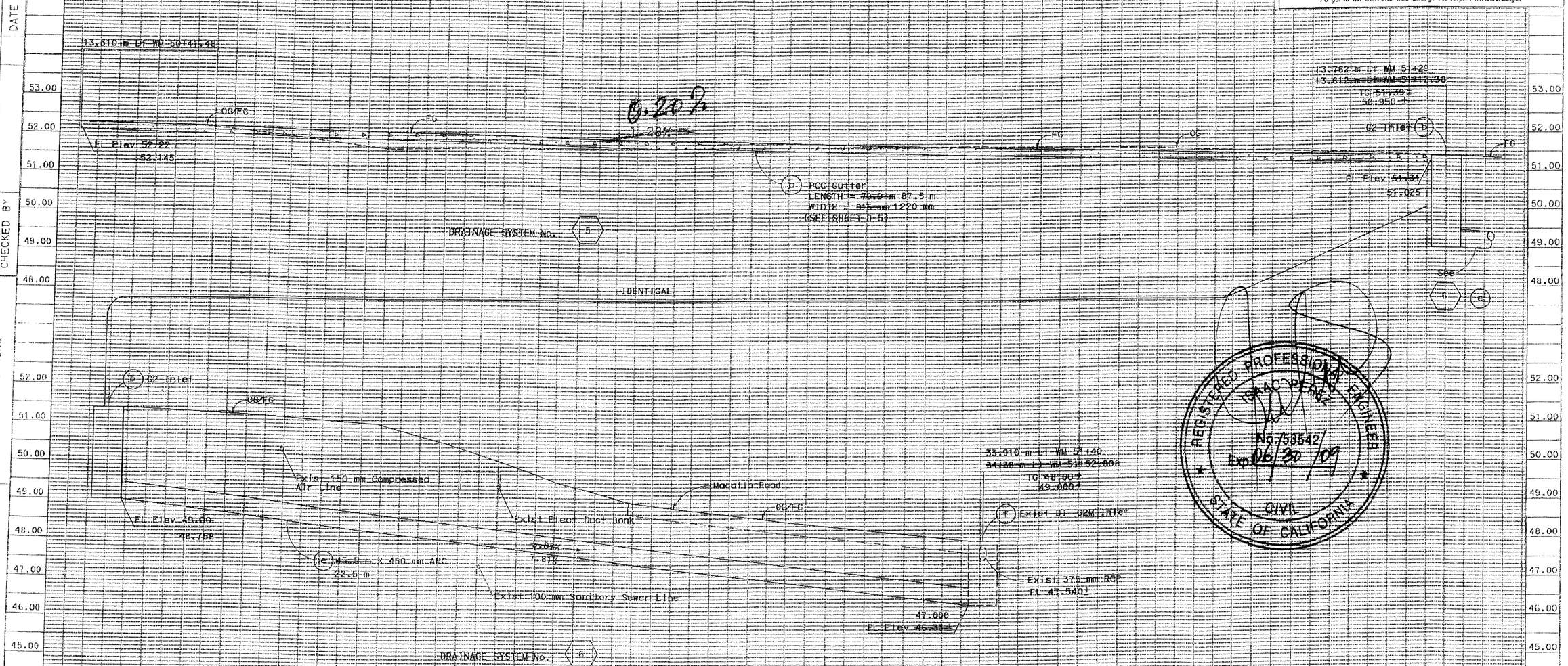

REGISTERED PROFESSIONAL ENGINEER
ISAAC PEREZ
No. 53542
Exp. 06/30/09
CIVIL
STATE OF CALIFORNIA

CONTRACT NO. 04-0120R4

CONTRACT CHANGE ORDER NO. 102

SHEET 3 OF 6

All Dimensions are in Meters unless otherwise shown

DRAINAGE PROFILES

SCALE: HORIZ 1:100
VERT 1:50

Contract Change Order No.
Sheet No. ___ of ___

D-4

STATE OF CALIFORNIA - DEPARTMENT OF TRANSPORTATION

Caltrans

PROJECT ENGINEER C. HONG WONG

CALCULATED/DESIGNED BY

CHECKED BY

DATE REVISED BY

DATE REVISED

Station

m³ Exc Emb

D:\gf\PROJECTS\YBI\10-3-07\Drainage_070129 - cco-Drainage profiles Sheets D2 D3 D4.dgn

RELATIVE BORDER SCALE IS IN MILLIMETERS 0 20 40 60 80

USERNAME => gfong
DGN FILE => Drainage_070129 - cco-Drainage profiles Sheets D2 D3 D4.dgn

CU 00000

EA 0120R4

LAST REVISION 01-30-07

DATE PLOTTED => 09-OCT-2007
TIME PLOTTED => 14:54

DIST.	DOCUMENT	ROUTE	SITEMETER POST TOTAL PROJECT	SHEET No.	TOTAL SHEETS
04	SF	80	12.6/13.2		

REGISTERED CIVIL ENGINEER

PLANS APPROVAL DATE

The State of California or its officers or agents shall not be responsible for the accuracy or completeness of electronic copies of this plan sheet.

To get to the Caltrans web site, go to: http://www.dot.ca.gov

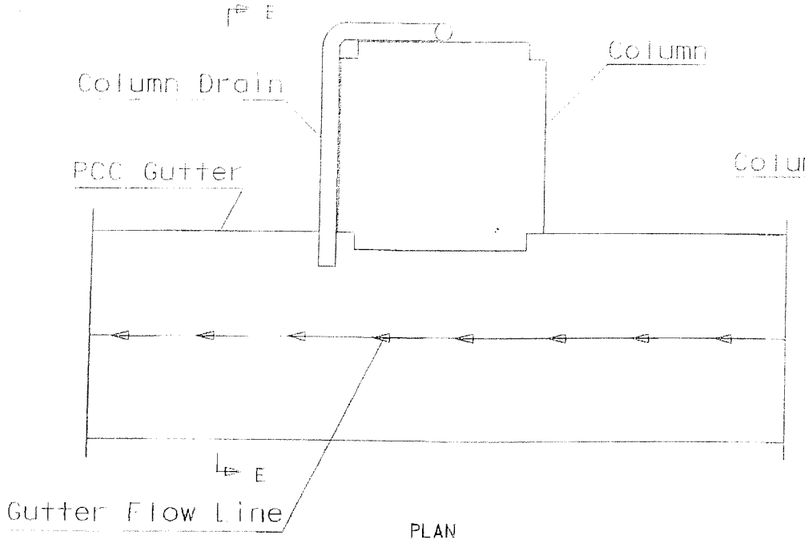

PLAN

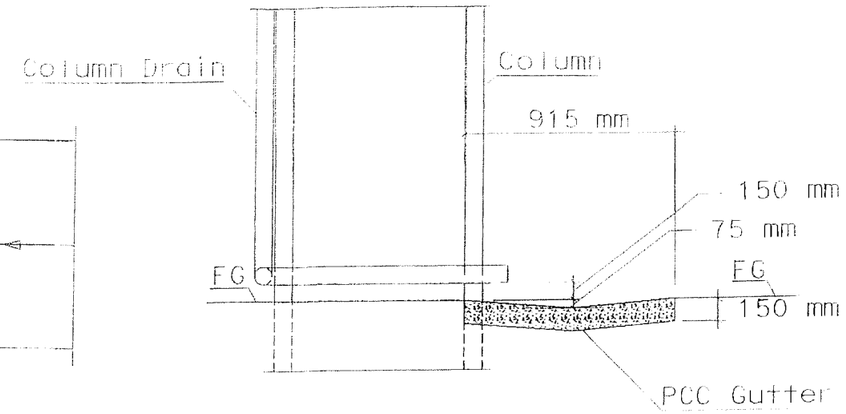

SECTION E-E

PCC GUTTER DETAIL

5 a

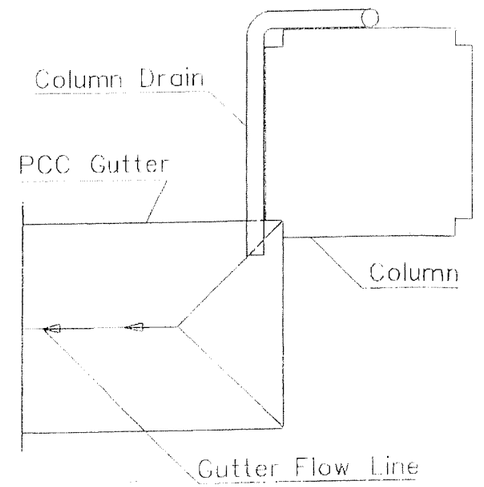

PCC GUTTER END DETAIL

5 a

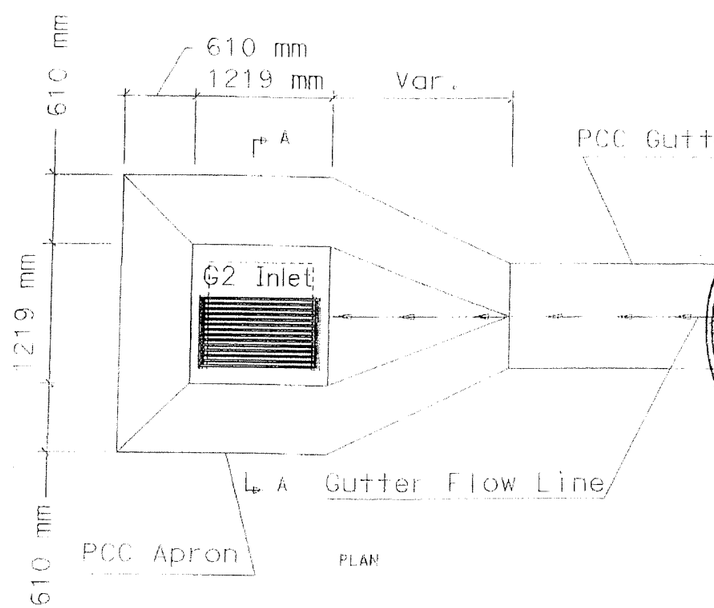

PLAN

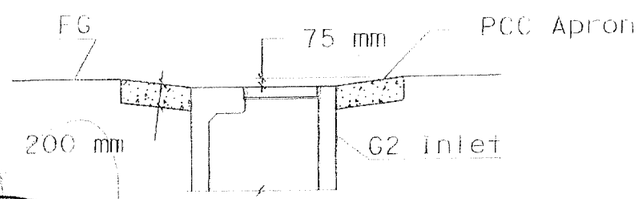

SECTION A-A

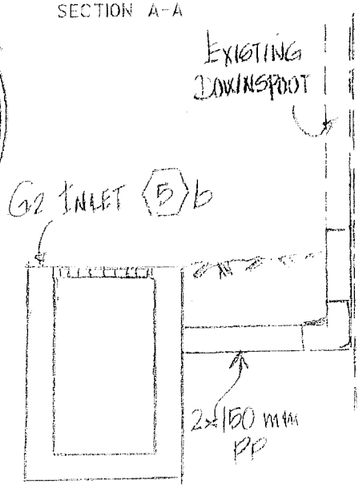

EXISTING COLUMN (BENT 4B)

PCC GUTTER TRANSITION TO G2 INLET

5 a b

EXISTING DOWNSPOUT CONNECTION TO PROPOSED INLET

5 b (NTS)

All Dimensions are in Meters unless otherwise shown

DRAINAGE DETAILS

NO SCALE

D-5

Contract Change Order No. ____

Sheet No. ____ Of ____

CONTRACT NO. 04-0120R4

CONTRACT CHANGE ORDER NO 102

SHEET 4 OF 6

REGISTERED PROFESSIONAL ENGINEER ISAAC PEREZ No. 53542 Exp. 06/30/09 CIVIL STATE OF CALIFORNIA

STATE OF CALIFORNIA - DEPARTMENT OF TRANSPORTATION

Caltrans

PROJECT ENGINEER C. HONG WONG

CALCULATED/DESIGNED BY | CHECKED BY | DATE | REVISED BY | DATE REVISED

D:\gf\PROJECTS\YBI\10-3-07\Drainage_070129 - Drainage Details Sheet D5.dgn

LAST REVISION 02-01-07 | DATE PLOTTED => 09-OCT-2007 | TIME PLOTTED => 10:23

RELATIVE BORDER SCALE IS IN MILLIMETERS 0 20 40 60 80

USERNAME => gfong | DGN FILE => Drainage_070129 - Drainage Details Sheet D5.dgn

CU 00000 | EA 0120R4

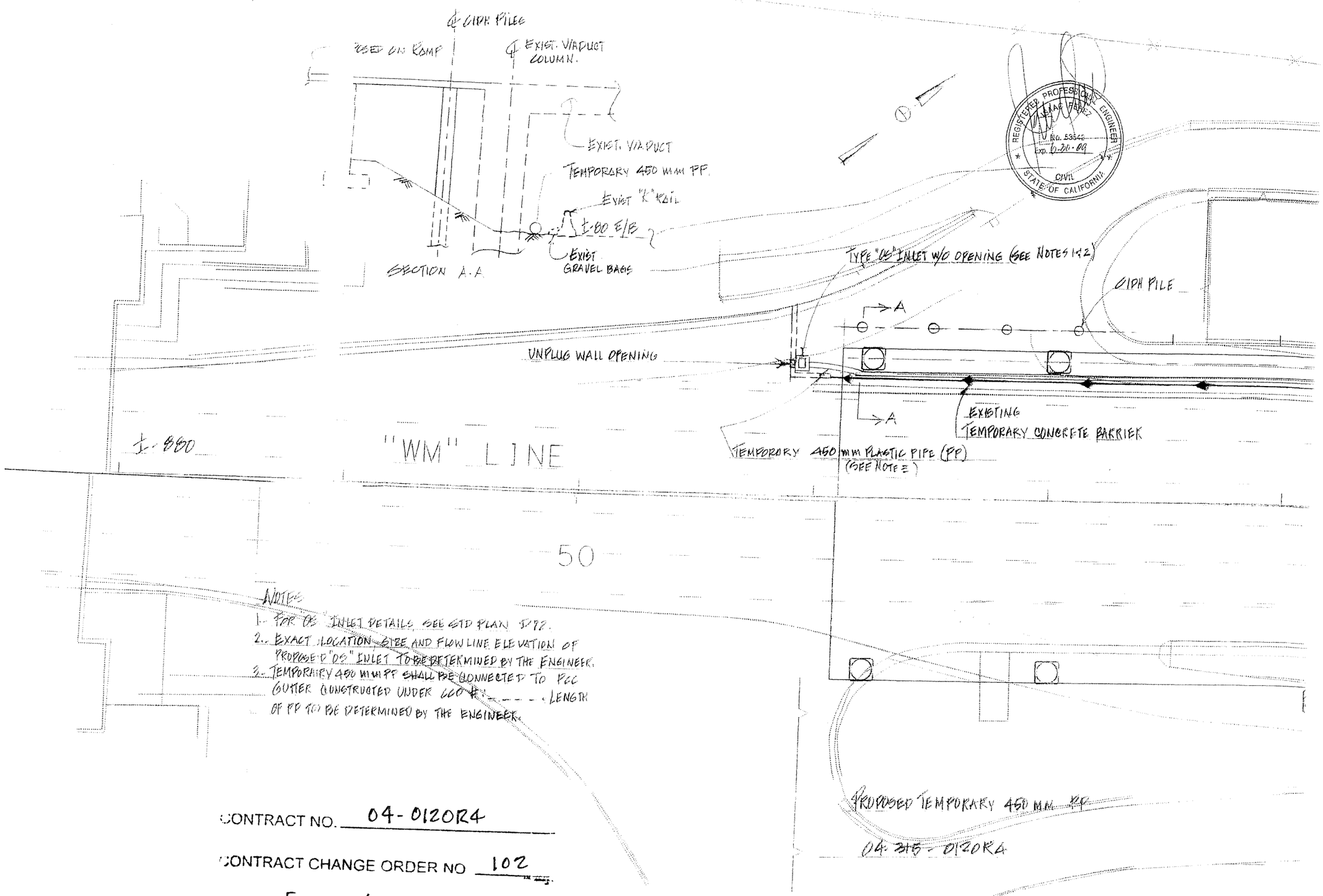

NOTES

1. FOR DS INLET DETAILS, SEE STD PLAN D75.
2. EXACT LOCATION, SIZE AND FLOW LINE ELEVATION OF PROPOSED "DS" INLET TO BE DETERMINED BY THE ENGINEER.
3. TEMPORARY 450 MM PP SHALL BE CONNECTED TO PCC GUTTER CONSTRUCTED UNDER 600 E. LENGTH OF PP TO BE DETERMINED BY THE ENGINEER.

CONTRACT NO. 04-0120R4

CONTRACT CHANGE ORDER NO 102

SHEET 5 OF 6

Caltrans Metric

REGISTERED CIVIL ENGINEER 11-27-06

Isaac Perez No. 53542 Exp. 06-30-07 CIVIL

PLANS APPROVAL DATE

The State of California or its officers or agents shall not be responsible for the accuracy or completeness of electronic copies of this plan sheet.

DATE REVISED | CHECKED BY

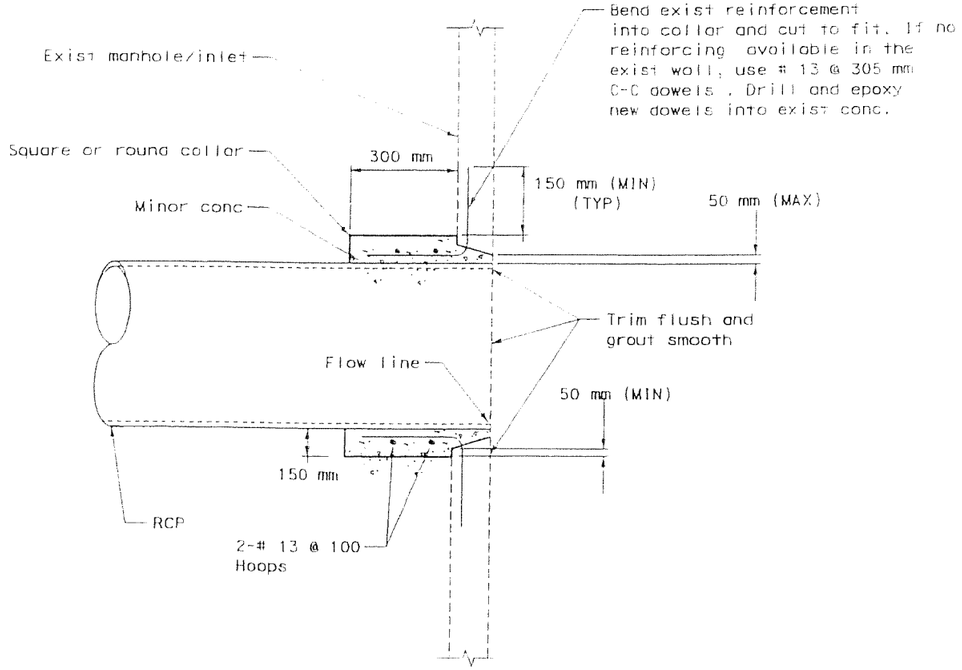

CONCRETE COLLAR PIPE CONNECTION TO EXISTING INLET

7 d

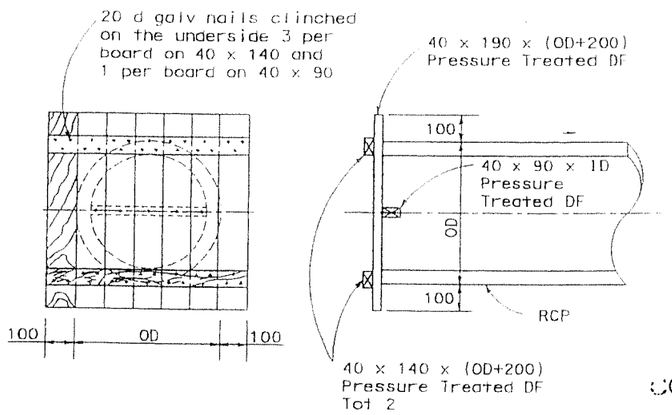

TIMBER BULKHEAD DETAIL

6

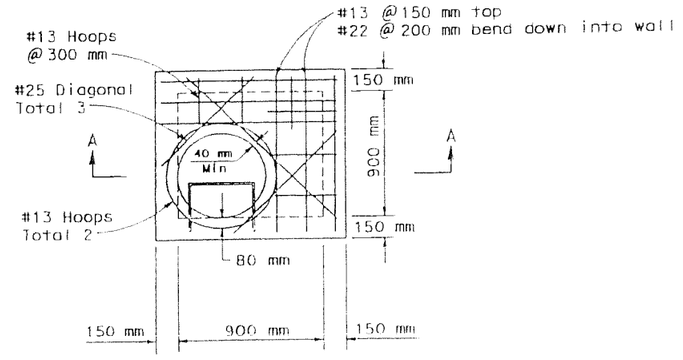

PLAN

NOTE: For details not shown, see Std Plan D73 - G2 Inlet.

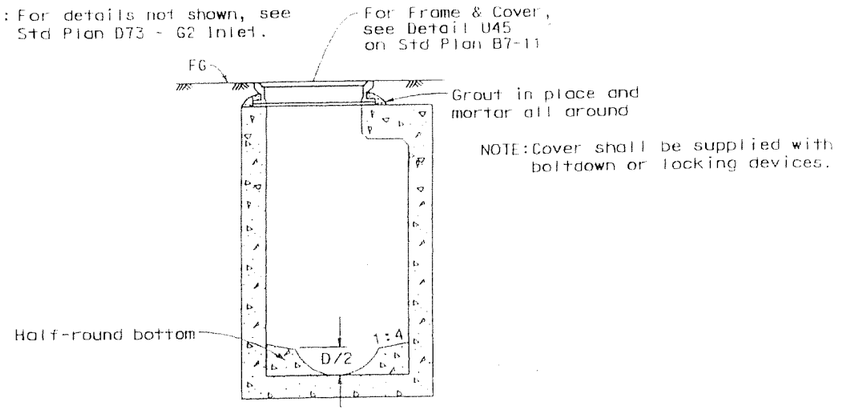

SECTION A-A

G2M INLET

1 5 6 7

CONTRACT NO. 04-0120R4

CONTRACT CHANGE ORDER NO 102

SHEET 6 OF 6

All Dimensions are in Millimeters unless otherwise shown

CONTRACT CHANGE ORDER NO.

SHEET ___ OF ___

DRAINAGE DETAILS

NO SCALE

DD-1

LAST REVISION 11-06-06 | DATE PLOTTED => 29-NOV-2006 | TIME PLOTTED => 11:44

STATE OF CALIFORNIA - DEPARTMENT OF TRANSPORTATION

CONTRACT CHANGE ORDER MEMORANDUM

RECEIVED

DATE: 2/19/2008

TO: MIKE FORNER / DENNIS TURCHON

FROM: BILL CASEY

FILE: E.A. 04 - 0120R4
CO-RTE-PM SF-80-12.6/13.2
FED. NO. ACBRIM-080-1(097)N

007652 JUN 20 8

CCO#: **102** | SUPPLEMENT#: **0** | Category Code: **CCPA**

CONTINGENCY BALANCE (incl. this change) **$76,122,996.82**

COST: **$60,000.00** INCREASE ☑ DECREASE ☐

HEADQUARTERS APPROVAL REQUIRED? ☐ YES ☑ NO

SUPPLEMENTAL FUNDS PROVIDED: **$0.00**

IS THIS REQUEST IN ACCORDANCE WITH ENVIRONMENTAL DOCUMENTS? ☑ YES ☐ NO

CCO DESCRIPTION:
WTI Phase 1 North Side Drainage

PROJECT DESCRIPTION:
CONSTRUCT ROUTE 80 TEMP BYPASS STRUCTURE

Original Contract Time:	Time Adj. This Change:	Previously Approved CCO Time Adjustments:	Percentage Time Adjusted: (including this change)	Total # of Unreconciled Deferred Time CCO(s): (including this change)
475 Day(s)	**0** Day(s)	**1195** Day(s)	**252** %	**7**

THIS CHANGE ORDER PROVIDES FOR:

Constructing drainage measures at the northside (West Tie-In) of the existing San Francisico - Oakland Bay Bridge (Bridge No. 33-0025) between Bents 39 and 48.

The project calls for the construction of a Temporary Bypass Structure in order to allow for the tie in of the new SFOBB east span to the existing Yerba Buena Island (YBI) concrete viaduct. The Department issued a December 14, 2006 memo entitled Strategy for South-South Detour Contract Completion which was approved by both Tony Anziano (Toll Bridge Program Manager) and Richard Land (Chief Engineer). This strategy memo provided for the retrofit of the existing upper deck of the YBI concrete viaduct at the western tie in of the Temporary Bypass Structure.

During Labor Day 2007, the existing WTI structure was removed and the replacement structure rolled-in. This roll-out / roll-in operation necessitated the removal of the existing northside (West Tie-In) drainage system. This change order is necessary to restore the north side (West Tie-In) drainage system.

The scope of work includes constructing a Type G2 inlet, PCC gutter, installling pipe, along with the required SWPPP support work. Contractor shall be compensated by Extra Work at Force Account at an estimated amount of $ 60,000.00, which will be financed by the contract's contingency funds. A cost analysis is in the project files.

Alec Melkonians - Asst. Project Manager for the SFOBB Toll Bridge Program requested this change per Memorandum dated February 27, 2008 and concurred by Lina Ellis - Structures Maintenance.

There is no time adjustment due to work of this change as it does not affect the controlling operation.

CONCURRED BY:			
Construction Engineer:		Date	3/4/08
Bridge Engineer:		Date	
Project Engineer:	Hong Wong, PE	Date	3/3/08
Project Manager:	Alec Melkonians	Date	2/27/08
FHWA Rep.:		Date	
Environmental:		Date	
Other (specify):	Lina Ellis, Maintenance	Date	3/3/08
Other (specify):		Date	
District Prior Approval By:		Date	
HQ (Issue Approve) By:		Date	
Resident Engineer's Signature:		Date	3-4-08

ESTIMATE OF COST

	THIS REQUEST	TOTAL TO DATE
ITEMS	$0.00	$0.00
FORCE ACCOUNT	$60,000.00	$60,000.00
AGREED PRICE	$0.00	$0.00
ADJUSTMENT	$0.00	$0.00
TOTAL	$60,000.00	$60,000.00

FEDERAL PARTICIPATION

☐ PARTICIPATING ☐ PARTICIPATING IN PART ☐ NONE
☐ NON-PARTICIPATING (MAINTENANCE) ☑ NON-PARTICIPATING

FEDERAL SEGREGATION (if more than one Funding Source or P.I.P. type)
☑ CCO FUNDED PER CONTRACT ☐ CCO FUNDED AS FOLLOWS

FEDERAL FUNDING SOURCE	PERCENT

ADA Notice: For individuals with sensory disabilities, this document is available in alternate formats. For information call: (916) 654-6410 or TDD (916) 654-3880 or write Records and Forms Management, 1120 N Street, MS-89, Sacramento, CA 95814.

CONTRACT CHANGE ORDER

Change Requested by: Engineer

CCO 102	Suppl. No. 1	Contract No. 04 - 0120R4	Road SF-80-12.6/13.2	FED. AID LOC.: ACBRIM-080-1(097)N

To: **CC MYERS INC**

You are directed to make the following changes from the plans and specifications or do the following described work not included in the plans and specifications for this contract. ***NOTE: This change order is not effective until approved by the Engineer.***

Description of work to be done, estimate of quantities and prices to be paid. (Segregate between additional work at contract price, agreed price and force account.) Unless otherwise stated, rates for rental of equipment cover only such time as equipment is actually used and no allowance will be made for idle time. This last percentage shown is the net accumulated increase or decrease from the original quantity in the Engineer's Estimate.

Extra Work at Lump Sum:

As authorized by the Engineer and as shown on Sheets 2 to 3 of this change order, construct additional permanent drainage measures at the northside (West Tie-In) of the existing San Francisco - Oakland Bay Bridge between Bents 39 and 48.

For this work, the Contractor shall be compensated at a lump sum price of $ 48,817.68. This sum shall constitutes full and final compensation including markups for the work of this change.

Total cost of Extra Work at Lump Sum $48,817.68

Connecting the bridge column drains to the drainage inlets will be paid for in the original Contract Change Order No. 102 Sup. 0 at Extra Work at Force Account.

Estimated Cost: **Increase** ☑ **Decrease** ☐ **$48,817.68**

By reason of this order the time of completion will be adjusted as follows: 0 days

Submitted by:

Signature	Resident Engineer BILL CASEY	Date 2-20-09

Approval Recommended by:

Signature Deanna Vilcheck	Area Construction Manager DEANNA VILCHECK	Date 2/23/09

Engineer Approval by:

Signature Deanna Vilcheck	Area Construction Manager DEANNA VILCHECK	Date 7/16/09

We the undersigned contractor, have given careful consideration to the change proposed and agree, if this proposal is approved, that we will provide all equipment, furnish the materials, except as may otherwise be noted above, and perform all services necessary for the work above specified, and will accept as full payment therefor the prices shown above.

NOTE: If you, the contractor, do not sign acceptance of this order, your attention is directed to the requirements of the specifications as to proceeding with the ordered work and filing a written protest within the time therein specified.

Contractor Acceptance by:

Signature	(Print name and title) STEVE FRANCIS, CHIEF ESTIMATOR	Date 7.3.09

TG ELEVATION @ INLETS NEXT TO COLUMNS ALONG SFOBB VIADUCT (NORTH SIDE) - YB1

0120 R3

08.07.08

ISAAC PEREZ

REGISTERED PROFESSIONAL ENGINEER
ISAAC PEREZ
No. 63542
Exp. 6-30-09
CIVIL
STATE OF CALIFORNIA

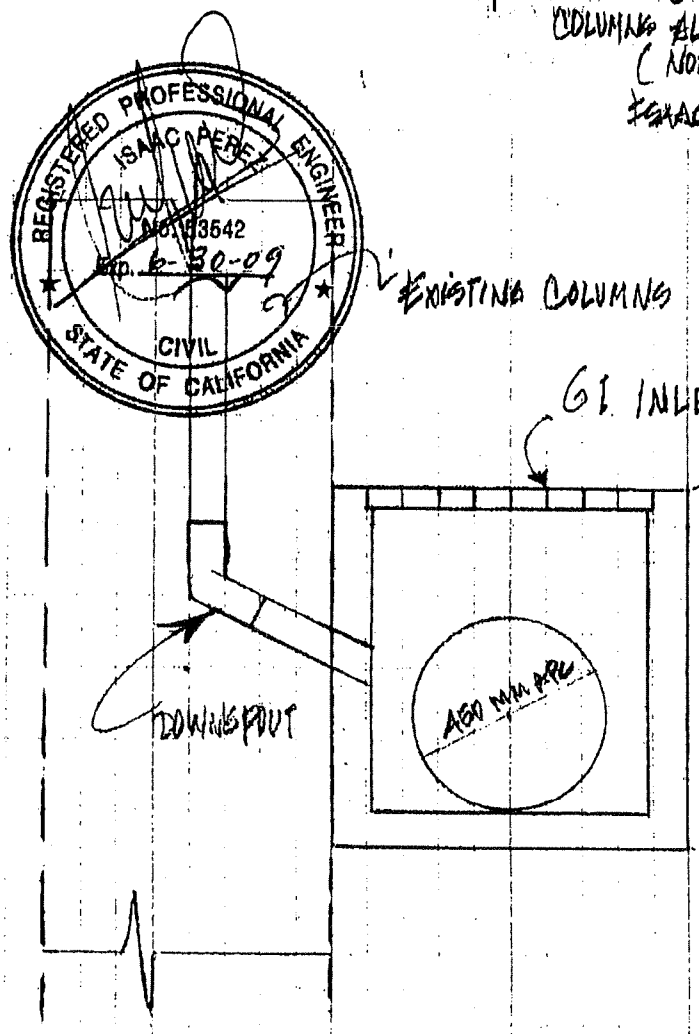

Note:

1.- GI INLETS FL, SHOULD MATCH FLOWLINE ELEV. OF 450 MM ARC THAT RUNS FROM BENT 39 TO BENT 48.

TG ELEVATION	BENT #
51.46	40
51.100	41
51.000	42
50.950	43

TABLE I

CONTRACT NO. 04-0120R4

CONTRACT CHANGE ORDER NO 102 SUP. 1

SHEET 2 OF 3

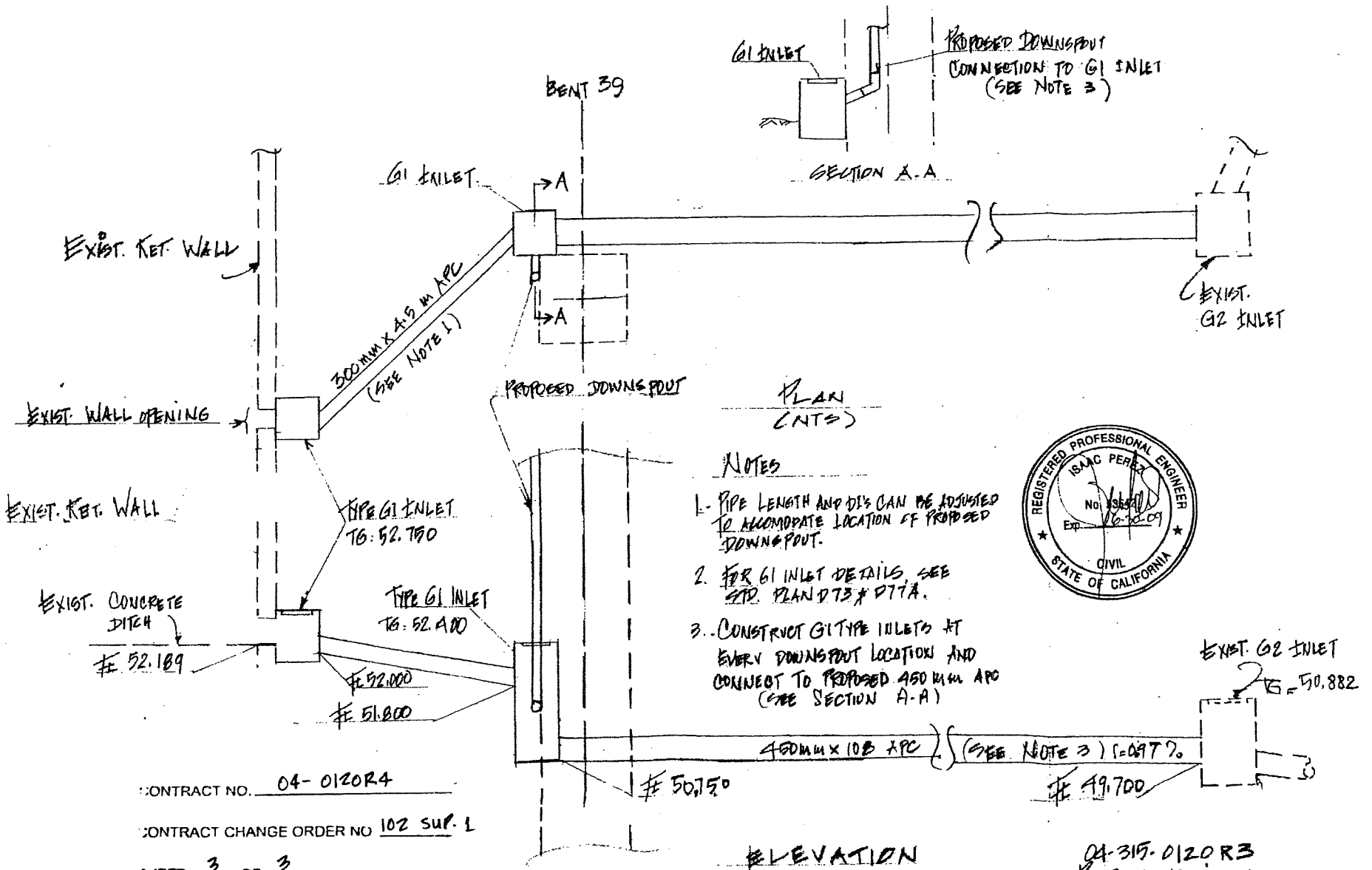

CONTRACT NO. 04-0120R4

CONTRACT CHANGE ORDER NO 102 SUP. 1

SHEET 3 OF 3

04-315-0120R3
PROPOSED DRAINAGE
NORTH SIDE OF SFOBB VIADUCT
YERBA BUENA ISLAND

STATE OF CALIFORNIA - DEPARTMENT OF TRANSPORTATION

CONTRACT CHANGE ORDER MEMORANDUM

DATE: 11/5/2008 Page 1 of 1

TO: MIKE FORNER / DEANNA VILCHECK	FILE: E.A. 04 - 0120R4
	CO-RTE-PM SF-80-12.6/13.2
FROM: BILL CASEY	FED. NO. ACBRIM-080-1(097)N
CCO#: 102 SUPPLEMENT#: 1 Category Code: CCPA	CONTINGENCY BALANCE (incl. this change) $71,629,382.05
COST: $48,817.68 INCREASE ☑ DECREASE ☐	HEADQUARTERS APPROVAL REQUIRED? ☐ YES ☑ NO
SUPPLEMENTAL FUNDS PROVIDED: $0.00	IS THIS REQUEST IN ACCORDANCE WITH ENVIRONMENTAL DOCUMENTS? ☑ YES ☐ NO
CCO DESCRIPTION: WTI North Drainage Addt'l Work	PROJECT DESCRIPTION: CONSTRUCT ROUTE 80 TEMP BYPASS STRUCTURE

Original Contract Time:	Time Adj. This Change:	Previously Approved CCO Time Adjustments:	Percentage Time Adjusted: (including this change)	Total # of Unreconciled Deferred Time CCO(s): (including this change)
475 Day(s)	0 Day(s)	1195 Day(s)	252 %	7

THIS CHANGE ORDER PROVIDES FOR:

Constructing additional permanent drainage measures at the northside (West Tie-In) of the existing San Francisico - Oakland Bay Bridge (Bridge No. 33-0025) between Bents 39 and 48.

The project calls for the construction of a Temporary Bypass Structure in order to allow for the tie in of the new SFOBB east span to the existing Yerba Buena Island (YBI) concrete viaduct. The Department issued a December 14, 2006 memo entitled Strategy for South-South Detour Contract Completion which was approved by both Tony Anziano (Toll Bridge Program Manager) and Richard Land (Chief Engineer). This strategy memo provided for the retrofit of the existing upper deck of the YBI concrete viaduct at the western tie in of the Temporary Bypass Structure.

The Original Contract Change Order 102 calls for permanent drainage measures at the northside West Tie-In area. However, when work was in progress it was determined that additional drainage measures were needed. This change order is necessary to complete the drainage system at the northside West Tie-In of the new SFOBB east span.

The scope of work includes constructing a Type G1 inlets, installling pipe, and other incidental work. The Contractor shall be compensated by Extra Work at Lump Sum price of $ 48,817.68, which will be financed by the contract's contingency funds. A cost analysis is in the project files.

There is no time adjustment due to work of this change as it does not affect the controlling operation.

This change was concurred by Alec Melkonians - Asst. Project Manager, Hong Wong - Project Engineer, and Lina Ellis - Structure Maintenance.

CONCURRED BY:			
Construction Engineer:	Mahantesh Anigol - Sr. TE	Date	
Bridge Engineer:		Date	
Project Engineer:	Hong Wong, PE	Date	1/27/09
Project Manager:	Alec Melkonians	Date	1/27/09
FHWA Rep.:		Date	
Environmental:		Date	
Other (specify):	Isaac Perez, Hydraulics	Date	1/27/09
Other (specify):	Lina Ellis, Maintenance	Date	2/19/09
District Prior Approval By:		Date	
HQ (Issue Approve) By:		Date	
Resident Engineer's Signature:		Date	

2-20-09

ESTIMATE OF COST	THIS REQUEST	TOTAL TO DATE
ITEMS	$0.00	$0.00
FORCE ACCOUNT	$0.00	$60,000.00
AGREED PRICE	$48,817.68	$48,817.68
ADJUSTMENT	$0.00	$0.00
TOTAL	$48,817.68	$108,817.68

FEDERAL PARTICIPATION

☐ PARTICIPATING ☐ PARTICIPATING IN PART ☑ NONE

☐ NON-PARTICIPATING (MAINTENANCE) ☐ NON-PARTICIPATING

FEDERAL SEGREGATION (if more than one Funding Source or P.I.P. type)

☐ CCO FUNDED PER CONTRACT ☐ CCO FUNDED AS FOLLOWS

FEDERAL FUNDING SOURCE	PERCENT

ADA Notice: For individuals with sensory disabilities, this document is available in alternate formats. For information call: (916) 654-6410 or TDD (916) 654-3880 or write Records and Forms Management, 1120 N Street, MS-89, Sacramento, CA 95814.

CONTRACT CHANGE ORDER

Change Requested by: Engineer

CCO 102	Suppl. No. 2	Contract No. 04 - 0120R4	Road SF-80-12.6/13.2	FED. AID LOC.: ACBRIM-080-1(097)N

To: **CC MYERS INC**

You are directed to make the following changes from the plans and specifications or do the following described work not included in the plans and specifications for this contract. ***NOTE: This change order is not effective until approved by the Engineer.***

Description of work to be done, estimate of quantities and prices to be paid. (Segregate between additional work at contract price, agreed price and force account.) Unless otherwise stated, rates for rental of equipment cover only such time as equipment is actually used and no allowance will be made for idle time. This last percentage shown is the net accumulated increase or decrease from the original quantity in the Engineer's Estimate.

Extra Work at Force Account:

Provide additional funds in constructing drainage measures at the northside (West Tie-In) of the existing San Francisico - Oakland Bay Bridge between Bents 39 and 48.

Compensation for this work will be paid for as extra work as provided for in Section 5-1.24 "Force Account Payment" of the Special Provisions, and Section 4-1.03D "Extra Work" of the Standard Specifications.

Estimated cost of Extra Work at Force Account $50,000.00

Estimated Cost: **Increase** ☑ **Decrease** ☐ **$50,000.00**

By reason of this order the time of completion will be adjusted as follows: 0 days

Submitted by:		
Signature	**Resident Engineer** BILL CASEY	**Date** 7-3-09
Recommended for Approval by:		
Signature Deanna Vilcheck	**Area Construction Manager** DEANNA VILCHECK	**Date** 7/6/09
Approved by:		
Signature Deanna Vilcheck	**Area Construction Manager** DEANNA VILCHECK	**Date** 7/16/09

We the undersigned contractor, have given careful consideration to the change proposed and agree, if this proposal is approved, that we will provide all equipment, furnish the materials, except as may otherwise be noted above, and perform all services necessary for the work above specified, and will accept as full payment therefor the prices shown above.

NOTE: If you, the contractor, do not sign acceptance of this order, your attention is directed to the requirements of the specifications as to proceeding with the ordered work and filing a written protest within the time therein specified.

Contractor Accepted by:		
Signature	**(Print name and title)** STEVE FRANCIS, CHIEF ESTIMATOR	**Date** 7.14.09

STATE OF CALIFORNIA - DEPARTMENT OF TRANSPORTATION

CONTRACT CHANGE ORDER MEMORANDUM

DATE: 6/30/2009 Page 1 of 1

TO: MIKE FORNER / DEANNA VILCHECK

FROM: BILL CASEY

FILE: E.A. 04 - 0120R4
CO-RTE-PM SF-80-12.6/13.2
FED. NO. ACBRIM-080-1(097)N

CCO#: **102** SUPPLEMENT#: **2** Category Code: **CCPV**

CONTINGENCY BALANCE (incl. this change) **$34,979,005.59**

COST: **$50,000.00** INCREASE ☑ DECREASE ☐

HEADQUARTERS APPROVAL REQUIRED? ☐ YES ☑ NO

SUPPLEMENTAL FUNDS PROVIDED: **$0.00**

IS THIS REQUEST IN ACCORDANCE WITH ENVIRONMENTAL DOCUMENTS? ☑ YES ☐ NO

CCO DESCRIPTION:
WTI Phase 1 Additional Drainage Work

PROJECT DESCRIPTION:
CONSTRUCT ROUTE 80 TEMP BYPASS STRUCTURE

Original Contract Time:	Time Adj. This Change:	Previously Approved CCO Time Adjustments:	Percentage Time Adjusted: (including this change)	Total # of Unreconciled Deferred Time CCO(s): (including this change)
475 Day(s)	**0** Day(s)	**1195** Day(s)	**252** %	**7**

THIS CHANGE ORDER PROVIDES FOR:

additional funds in constructing drainage measures at the northside (West Tie-In) of the existing San Francisico - Oakland Bay Bridge (Bridge No. 33-0025) between Bents 39 and 48.

This project, the Yerba Buena Island Detour (YBID), was awarded in March 2004 to construct a detour that will allow for the tie in of the new east span of the San Francisco Oakland Bay Bridge to Yerba Buena Island. The YBID encompasses three main structures, the East Tie-In to the existing bridge, the West Tie-In (WTI) to Yerba Buena Island, and the Viaduct structure between the two tie ins.

The original CCO No. 102 in the amount of $60,000.00 (Extra Work @ Force Account) was executed to cover the work originally contemplated. However, additional funds are required to compensate the Contractor for unforseen additional miscellaneous work identified by the Field Engineer during drainage construction.

The Contractor shall be compensated in Extra Work at Force Account to pay all oustanding extra work bills in the holding file at an estimated amount of $ 50,000.00, which will be financed by the contract's contingency funds.

Contractor's signature is not required for additional funds for Extra Work at Force Account change orders. Therefore, this change is being processed unilaterally.

There is no time adjustment due to work of this change as it does not affect the controlling operation.

This change was concurred with by Alec Melkonians - Asst. Project Manager and Hong Wong - Project Engineer.

CONCURRED BY:		
Construction Engineer:	Jeannie Balderramos	Date
Bridge Engineer:		Date
Project Engineer:	Hong Wong, PE	Date 7/1/09
Project Manager:	Alec Melkonians	Date 7/1/09
FHWA Rep.:		Date
Environmental:		Date
Other (specify):		Date
Other (specify):		Date
District Prior Approval By:		Date
HQ (Issue Approve) By:		Date
Resident Engineer's Signature:		Date

7-3-09

ESTIMATE OF COST

	THIS REQUEST	TOTAL TO DATE
ITEMS	$0.00	$0.00
FORCE ACCOUNT	$50,000.00	$110,000.00
AGREED PRICE	$0.00	$48,817.68
ADJUSTMENT	$0.00	$0.00
TOTAL	$50,000.00	$158,817.68

FEDERAL PARTICIPATION

☐ PARTICIPATING ☐ PARTICIPATING IN PART ☑ NONE
☐ NON-PARTICIPATING (MAINTENANCE) ☐ NON-PARTICIPATING

FEDERAL SEGREGATION (if more than one Funding Source or P.I.P. type)
☐ CCO FUNDED PER CONTRACT ☐ CCO FUNDED AS FOLLOWS

FEDERAL FUNDING SOURCE	PERCENT

ADA Notice: For individuals with sensory disabilities, this document is available in alternate formats. For information call: (916) 654-6410 or TDD (916) 654-3880 or write Records and Forms Management, 1120 N Street, MS-89, Sacramento, CA 95814.

STATE OF CALIFORNIA - DEPARTMENT OF TRANSPORTATION

CONTRACT CHANGE ORDER

Change Requested by: Engineer

CCO: 102	Suppl. No. 3	Contract No. 04 - 0120R4	Road SF-80-12.6/13.2	FED. AID LOC.:

To: **CC MYERS INC**

You are directed to make the following changes from the plans and specifications or do the following described work not included in the plans and specifications for this contract. ***NOTE: This change order is not effective until approved by the Engineer.***

Description of work to be done, estimate of quantities and prices to be paid. (Segregate between additional work at contract price, agreed price and force account.) Unless otherwise stated, rates for rental of equipment cover only such time as equipment is actually used and no allowance will be made for idle time. This last percentage shown is the net accumulated increase or decrease from the original quantity in the Engineer's Estimate.

Extra Work at Force Account:

Provide additional funds for the work specified under the original Change Order No. 102 and the connection of the column drains as specified under Change Order No.102, Supplement No. 1.

Estimated cost of Extra Work at Force Account $30,000.00

Estimated Cost: Increase ☑ Decrease ☐ **$30,000.00**

By reason of this order the time of completion will be adjusted as follows: 0 days

Submitted by		
Signature Jeannie Balderramos	Resident Engineer JEANNIE BALDERRAMOS	Date 6-22-10
Approval Recommended by		
Signature Jeannie Balderramos	Senior Resident Engineer JEANNIE BALDERRAMOS	Date 6-22-10
Approved by		
Signature Deanna Vilcheck	Area Construction Manager DEANNA VILCHECK	Date 6/22/10

We the undersigned contractor, have given careful consideration to the change proposed and agree, if this proposal is approved, that we will provide all equipment, furnish the materials, except as may otherwise be noted above, and perform all services necessary for the work above specified, and will accept as full payment therefor the prices shown above.

NOTE: If you, the contractor, do not sign acceptance of this order, your attention is directed to the requirements of the specifications as to proceeding with the ordered work and filing a written protest within the time therein specified.

Contractor Acceptance by		
Signature NOT REQUIRED	(Print name and title)	Date

CONTRACT CHANGE ORDER

Change Requested by: Engineer

CCO 103	Suppl. No. 0	Contract No. 04 - 0120R4	Road SF-80-12.6/13.2	FED. AID LOC.: ACBRIM-080-1(097)N

To: CC MYERS INC

You are directed to make the following changes from the plans and specifications or do the following described work not included in the plans and specifications for this contract. ***NOTE: This change order is not effective until approved by the Engineer.***

Description of work to be done, estimate of quantities and prices to be paid. (Segregate between additional work at contract price, agreed price and force account.) Unless otherwise stated, rates for rental of equipment cover only such time as equipment is actually used and no allowance will be made for idle time. This last percentage shown is the net accumulated increase or decrease from the original quantity in the Engineer's Estimate.

Adjustment of Compensation at Lump Sum:

Provide compensation to the Contractor for all outstanding costs associated with the West Tie-In Phase 1 move-in of the retrofitted upper deck structure. Compensation includes, but is not limited to, outstanding costs associated with the Department ordered contingencies (furnishing soffit covers and steel plates and providing backup asphalt concrete grinder and paving crew), furnishing additional temporary concrete railing along the eastbound YBI on ramp, and chipping and patching concrete for the installation of strain gauges.

For this work, the Contractor will be compensated a lump sum of $173,140.00. This sum constitutes full and final compensation for all outstanding costs, including all markups, associated with the work of this change.

Total Cost of Adjustment of Compensation at Lump Sum $173,140.00

Estimated Cost: Increase ☑ Decrease ☐ **$173,140.00**

By reason of this order the time of completion will be adjusted as follows: 0 days

Submitted by

Signature	Resident Engineer	Date
	BILL CASEY	2-11-08

Approval Recommended by

Signature	Area Construction Manager	Date
	DENNIS TURCHON	2/11/08

Engineer Approval by

Signature	Area Construction Manager	Date
	DENNIS TURCHON	2/20/08

We the undersigned contractor, have given careful consideration to the change proposed and agree, if this proposal is approved, that we will provide all equipment, furnish the materials, except as may otherwise be noted above, and perform all services necessary for the work above specified, and will accept as full payment therefor the prices shown above.

NOTE: If you, the contractor, do not sign acceptance of this order, your attention is directed to the requirements of the specifications as to proceeding with the ordered work and filing a written protest within the time therein specified.

Contractor Acceptance by

Signature	(Print name and title)	Date
	DANIEL E. HAMICK, PRESIDENT	3/19/08

STATE OF CALIFORNIA - DEPARTMENT OF TRANSPORTATION

CONTRACT CHANGE ORDER MEMORANDUM

DATE: 2/6/2008 RECEIVED Page 1 of 1

007144 MAR -4 08

TO: MIKE FORNER / DENNIS TURCHON

FROM: BILL CASEY

FILE: E.A. 04 - 0120R4
CO-RTE-PM SF-80-12.6/13.2
FED. NO. ACBRIM-080-1(097)N

CCO#: **103** SUPPLEMENT#: **0** Category Code: **CHPA**

CONTINGENCY BALANCE (incl. this change) **$88,554,165.82**

COST: **$173,140.00** INCREASE ☑ DECREASE ☐

HEADQUARTERS APPROVAL REQUIRED? ☐ YES ☑ NO

SUPPLEMENTAL FUNDS PROVIDED: **$0.00**

IS THIS REQUEST IN ACCORDANCE WITH ENVIRONMENTAL DOCUMENTS? ☑ YES ☐ NO

CCO DESCRIPTION:
2007 Labor Day Weekend Misc. Costs

PROJECT DESCRIPTION:
CONSTRUCT ROUTE 80 TEMP BYPASS STRUCTURE

Original Contract Time:	Time Adj. This Change:	Previously Approved CCO Time Adjustments:	Percentage Time Adjusted: (including this change)	Total # of Unreconciled Deferred Time CCO(s): (including this change)
475 Day(s)	**0** Day(s)	**1195** Day(s)	**252** %	**7**

THIS CHANGE ORDER PROVIDES FOR:

compensation to the contractor for costs associated with the West Tie-In Phase 1 move-in of the retrofitted upper deck structure

The West Tie-In Phase 1 retrofit was authorized by the Department's December 14, 2006 strategy memo that was approved by Tony Anziano, Toll Bridge Program Manager, and Richard Land, Chief Engineer. The retrofit calls for the construction of a new concrete box girder bridge for the upper deck structure that will transition westbound I-80 traffic from the Yerba Buena Tunnel to the new east span of the San Francisco-Oakland Bay Bridge.

The new bridge was constructed adjacent to the old structure and then rolled into place after the demolition of the old structure. This change order provides compensation for miscellaneous costs associated with this work that remain outstanding. These costs are comprised of ordered contingency work to include furnishing soffit covers and steel plates, providing backup paving equipment and crews for the roll-in work, and chipping and patching concrete in order to allow for the placement of strain gauges.

Compensation shall be paid as an adjustment of compensation at an agreed lump sum of $173,140.00 which shall be financed from the contract's contingency funds. A cost estimate is on file.

No adjustment of contract time is warranted as the work will not affect the controlling operation.

Maintenance concurrence is not required as this change concerns costs associated with the move-in only and doesn't affect any permanent roadway features.

CONCURRED BY:

Construction Engineer:		Date
Bridge Engineer:		Date
Project Engineer:		Date
Project Manager:	Alec Melkonians	Date 2/6/08
FHWA Rep.:		Date
Environmental:		Date
Other (specify):		Date
Other (specify):		Date
District Prior Approval By:		Date
HQ (Issue Approve) By:		Date
Resident Engineer's Signature:		Date

2-11-08

ESTIMATE OF COST

	THIS REQUEST	TOTAL TO DATE
ITEMS	$0.00	$0.00
FORCE ACCOUNT	$0.00	$0.00
AGREED PRICE	$0.00	$0.00
ADJUSTMENT	$173,140.00	$173,140.00
TOTAL	$173,140.00	$173,140.00

FEDERAL PARTICIPATION

☐ PARTICIPATING ☐ PARTICIPATING IN PART ☐ NONE
☐ NON-PARTICIPATING (MAINTENANCE) ☑ NON-PARTICIPATING

FEDERAL SEGREGATION (if more than one Funding Source or P.I.P. type)
☑ CCO FUNDED PER CONTRACT ☐ CCO FUNDED AS FOLLOWS

FEDERAL FUNDING SOURCE	PERCENT

ADA Notice: For individuals with sensory disabilities, this document is available in alternate formats. For information call: (916) 654-6410 or TDD (916) 654-3880 or write Records and Forms Management, 1120 N Street, MS-89, Sacramento, CA 95814.

STATE OF CALIFORNIA - DEPARTMENT OF TRANSPORTATION

CONTRACT CHANGE ORDER

Change Requested by: Engineer

CCO 104	Suppl. No. 0	Contract No. 04 - 0120R4	Road SF-80-12.6/13.2	FED. AID LOC.: ACBRIM-080-1(097)N

To: **CC MYERS INC**

You are directed to make the following changes from the plans and specifications or do the following described work not included in the plans and specifications for this contract. ***NOTE: This change order is not effective until approved by the Engineer.***

Description of work to be done, estimate of quantities and prices to be paid. (Segregate between additional work at contract price, agreed price and force account.) Unless otherwise stated, rates for rental of equipment cover only such time as equipment is actually used and no allowance will be made for idle time. This last percentage shown is the net accumulated increase or decrease from the original quantity in the Engineer's Estimate.

Extra Work at Force Account:

As authorized by the Engineer, provide access to Span YB-4 at both Pier E-1 and Pier YB-4 of the existing East Bay Bridge structure (Bridge No. 33-0025).

Estimated cost of Extra Work at Force Account $150,000.00

Estimated Cost: Increase ☑ Decrease ☐ **$150,000.00**

By reason of this order the time of completion will be adjusted as follows: 0 days

Submitted by

Signature	Resident Engineer	Date
	BILL CASEY	12-5-07

Approval Recommended by

Signature	Area Construction Manager	Date
	DENNIS TURCHON	12/6/07

Engineer Approval by

Signature	Area Construction Manager	Date
	DENNIS TURCHON	1/4/08

We the undersigned contractor, have given careful consideration to the change proposed and agree, if this proposal is approved, that we will provide all equipment, furnish the materials, except as may otherwise be noted above, and perform all services necessary for the work above specified, and will accept as full payment therefor the prices shown above.

NOTE: If you, the contractor, do not sign acceptance of this order, your attention is directed to the requirements of the specifications as to proceeding with the ordered work and filing a written protest within the time therein specified.

Contractor Acceptance by

Signature	(Print name and title)	Date
	DANIEL E. HINCK, PRESIDENT	12/19/07

STATE OF CALIFORNIA - DEPARTMENT OF TRANSPORTATION

CONTRACT CHANGE ORDER MEMORANDUM

RECEIVED
DATE: 11/20/2007 Page 1 of 2

TO: MIKE FORNER / DENNIS TURCHON	FILE: E.A. 04 - 0120R4 007141 MAR -4 08
FROM: BILL CASEY	CO-RTE-PM SF-80-12.6/13.2
	FED. NO. ACBRIM-080-1(097)N
CCO#: 104 SUPPLEMENT#: 0 Category Code: CHPA	CONTINGENCY BALANCE (incl. this change) $119,454,654.41
COST: $150,000.00 INCREASE ☑ DECREASE ☐	HEADQUARTERS APPROVAL REQUIRED? ☐ YES ☑ NO
SUPPLEMENTAL FUNDS PROVIDED: $0.00	IS THIS REQUEST IN ACCORDANCE WITH ENVIRONMENTAL DOCUMENTS? ☑ YES ☐ NO
CCO DESCRIPTION: Pier E-1 Access	**PROJECT DESCRIPTION:** CONSTRUCT ROUTE 80 TEMP BYPASS STRUCTURE

Original Contract Time:	Time Adj. This Change:	Previously Approved CCO Time Adjustments:	Percentage Time Adjusted: (including this change)	Total # of Unreconciled Deferred Time CCO(s): (including this change)
475 Day(s)	0 Day(s)	1195 Day(s)	252 %	7

THIS CHANGE ORDER PROVIDES FOR:

Providing access to the existing bridge piers at Span YB-4 as authorized by the engineer.

This contract provides for the construction of a temporary detour for both eastbound and westbound I-80 traffic that allows for the tie in of the east span of the new San Francisco Oakland Bay Bridge (SFOBB) to Yerba Buena Island. The detour will allow for the construction of the permanent structure, the Yerba Buena Island Transition Structure, which connects the signature SAS structure to Yerba Buena Island.

The detour consist of three main structures, the East Tie-In (ETI) to the bridge, the West Tie-In to the island and the Viaduct structure between the two tie ins. The contract was awarded as a performance based project with the contractor responsible for meeting the design criteria specified in the contract.

A December 14, 2006 Department strategy memorandum, approved by Tony Anziano, Toll Bridge Program Manager, and Richard Land, Chief Engineer, recommended that the Department assume the design responsibility for the East Tie-In (ETI) structure. Based on this memorandum, the design of the structure was changed from a design that incorporated the existing steel truss bridge with the new structure to a design that replaces the existing structure with a new structure (roll out / roll in).

This change order provides access to the 2 piers of the existing span that will be replaced (rolled out) as part of the ETI design. Access is required to investigate as-built conditions of the structure as part of the on-going design in order to insure the proper conform between the old and new structures. It will be provided from the ground approximately 110 feet below the top of the piers. Costs concerning this change include the installation and removal of the stair towers along with approximately 18 months of rental costs.

The work shall be performed as extra work at force account at an estimated cost of $150,000.00 and shall be financed from the contract's contingency funds. A cost analysis is on file.

This change was requested by Mike Whiteside, YBI Coordination Engineer, per Memorandum on August 21, 2007.

No adjustment of contract time is required as the work will not affect the controlling operation.

ADA Notice: For individuals with sensory disabilities, this document is available in alternate formats. For information call: (916) 654-6410 or TDD (916) 654-3880 or write Records and Forms Management, 1120 N Street, MS-89, Sacramento, CA 95814.

CONCURRED BY:			
Construction Engineer:	Mahantesh Anigol, Dist. Rep	Date	
Bridge Engineer:	Mike Whiteside, Toll Bridge Design	Date	8/21/07
Project Engineer:	Hong Wong, PE	Date	12/4/07
Project Manager:	Alec Melkonians	Date	11/27/07
FHWA Rep.:		Date	
Environmental:		Date	
Other (specify):	Lina Ellis, Maintenance	Date	11/28/07
Other (specify):		Date	
District Prior Approval By:		Date	
HQ (Issue Approve) By:		Date	
Resident Engineer's Signature:		Date	

12-5-07

ESTIMATE OF COST

	THIS REQUEST	TOTAL TO DATE
ITEMS	$0.00	$0.00
FORCE ACCOUNT	$150,000.00	$150,000.00
AGREED PRICE	$0.00	$0.00
ADJUSTMENT	$0.00	$0.00
TOTAL	$150,000.00	$150,000.00

FEDERAL PARTICIPATION

☐ PARTICIPATING ☐ PARTICIPATING IN PART ☐ NONE
☐ NON-PARTICIPATING (MAINTENANCE) ☑ NON-PARTICIPATING

FEDERAL SEGREGATION (if more than one Funding Source or P.I.P. type)
☑ CCO FUNDED PER CONTRACT ☐ CCO FUNDED AS FOLLOWS

FEDERAL FUNDING SOURCE	PERCENT

ADA Notice: For individuals with sensory disabilities, this document is available in alternate formats. For information call: (916) 654-6410 or TDD (916) 654-3880 or write Records and Forms Management, 1120 N Street, MS-89, Sacramento, CA 95814.

STATE OF CALIFORNIA - DEPARTMENT OF TRANSPORTATION

CONTRACT CHANGE ORDER

Change Requested by: Engineer

CCO 104	Suppl. No. 1	Contract No. 04 - 0120R4	Road SF-80-12.6/13.2	FED. AID LOC.:

To: **CC MYERS INC**

You are directed to make the following changes from the plans and specifications or do the following described work not included in the plans and specifications for this contract. ***NOTE: This change order is not effective until approved by the Engineer.***

Description of work to be done, estimate of quantities and prices to be paid. (Segregate between additional work at contract price, agreed price and force account.) Unless otherwise stated, rates for rental of equipment cover only such time as equipment is actually used and no allowance will be made for idle time. This last percentage shown is the net accumulated increase or decrease from the original quantity in the Engineer's Estimate.

Extra Work at Force Account:

Provide additional funds for access to Span YB-4 at both Pier E-1 and Pier YB-4 of the existing East Bay Bridge structure (Bridge No. 33-0025).

Estimated Cost of Extra Work at Force Account $45,000.00

RECEIVED
011474 JAN 21 09

Estimated Cost: Increase ☑ Decrease ☐ $45,000.00

By reason of this order the time of completion will be adjusted as follows: 0 days

Submitted by

Signature	Resident Engineer	Date
[signature]	BILL CASEY	12-11-09

Approval Recommended by

Signature	Area Construction Manager	Date
Deanna Vilcheck	DEANNA VILCHECK	12/14/09

Engineer Approval by

Signature	Area Construction Manager	Date
Deanna Vilcheck	DEANNA VILCHECK	12/14/09

We the undersigned contractor, have given careful consideration to the change proposed and agree, if this proposal is approved, that we will provide all equipment, furnish the materials, except as may otherwise be noted above, and perform all services necessary for the work above specified, and will accept as full payment therefor the prices shown above.

NOTE: If you, the contractor, do not sign acceptance of this order, your attention is directed to the requirements of the specifications as to proceeding with the ordered work and filing a written protest within the time therein specified.

Contractor Acceptance by

Signature	(Print name and title)	Date
N/A	N/A	N/A

STATE OF CALIFORNIA - DEPARTMENT OF TRANSPORTATION

CONTRACT CHANGE ORDER MEMORANDUM

TO: MIKE FORNER / DEANNA VILCHECK	FILE: **E.A.** 04 - 0120R4
	CO-RTE-PM SF-80-12.6/13.2
FROM: BILL CASEY	**FED. NO.**
CCO#: **104** SUPPLEMENT#: **1** Category Code: **CHPA**	CONTINGENCY BALANCE (incl. this change) **$44,144,346.59**
COST: **$45,000.00** INCREASE ☑ DECREASE ☐	HEADQUARTERS APPROVAL REQUIRED? ☐ YES ☑ NO
SUPPLEMENTAL FUNDS PROVIDED: **$0.00**	IS THIS REQUEST IN ACCORDANCE WITH ENVIRONMENTAL DOCUMENTS? ☑ YES ☐ NO
CCO DESCRIPTION: Add Funds for Pier E-1 Access	**PROJECT DESCRIPTION:** CONSTRUCT ROUTE 80 TEMP BYPASS STRUCTURE

Original Contract Time:	Time Adj. This Change:	Previously Approved CCO Time Adjustments:	Percentage Time Adjusted: (including this change)	Total # of Unreconciled Deferred Time CCO(s): (including this change)
475 Day(s)	**0** Day(s)	**1600** Day(s)	**337** %	**0**

THIS CHANGE ORDER PROVIDES FOR:

...providing additional funds for access to the existing bridge piers at Span YB-4 as authorized by the Engineer.

This project, the Yerba Buena Island Detour (YBID), was awarded in March 2004 to construct a detour that will allow for the tie in of the new east span of the San Francisco Oakland Bay Bridge to Yerba Buena Island. The YBID encompasses three main structures, the East Tie-In to the existing bridge, the West Tie-In (WTI) to Yerba Buena Island, and the Viaduct structure between the two tie ins.

Two separate Department strategy memorandums, dated December 14, 2006 and December 25, 2006, approved by Tony Anziano - Toll Bridge Program Manager and Richard Land - Chief Engineer, recommended that the Department assume responsibility for the designs of the East Tie-In (ETI) and West Tie-In (WTI) portions of this contract, and incorporated seismic retrofit work of the permanent Yerba Buena Island Transition Structure (YBITS) onto this project. The approval of these strategy memorandums extended the project completion date approximately 5 years.

This change order provides access to the 2 piers of the existing span that will be replaced (rolled out) as part of the ETI design. Access was required to investigate as-built conditions of the structure in order to insure the proper conform between the old and new structures. Access will be provided from the ground approximately 110 feet below the top of the piers. Costs concerning this change include the installation and removal of the stair towers along with monthly rental costs.

The work shall be performed as extra work at force account at an estimated cost of $45,000.00 and shall be financed from the contract's contingency funds. A cost analysis is on file.

The Contractor's signature is not required for additional funds for Extra Work at Force Account change orders. Therefore this change order is being issued unilaterally.

No adjustment of contract time is required as the work will not affect the controlling operation.

ADA Notice: For individuals with sensory disabilities, this document is available in alternate formats. For information call: (916) 654-6410 or TDD (916) 654-3880 or write Records and Forms Management, 1120 N Street, MS-89, Sacramento, CA 95814.

CONCURRED BY:		
Construction Engineer:	Bill Casey, Resident Engineer	Date 12-11-09
Bridge Engineer:		Date
Project Engineer:		Date
Project Manager:		Date
FHWA Rep.:		Date
Environmental:		Date
Other (specify):		Date
Other (specify):		Date
District Prior Approval By:		Date
HQ (Issue Approve) By:		Date
Resident Engineer's Signature:		Date
		12-11-09

ESTIMATE OF COST

	THIS REQUEST	TOTAL TO DATE
ITEMS	$0.00	$0.00
FORCE ACCOUNT	$45,000.00	$195,000.00
AGREED PRICE	$0.00	$0.00
ADJUSTMENT	$0.00	$0.00
TOTAL	$45,000.00	$195,000.00

FEDERAL PARTICIPATION

☐ PARTICIPATING ☐ PARTICIPATING IN PART ☑ NONE
☐ NON-PARTICIPATING (MAINTENANCE) ☐ NON-PARTICIPATING

FEDERAL SEGREGATION (if more than one Funding Source or P.I.P. type)
☐ CCO FUNDED PER CONTRACT ☐ CCO FUNDED AS FOLLOWS

FEDERAL FUNDING SOURCE	PERCENT

ADA Notice: For individuals with sensory disabilities, this document is available in alternate formats. For information call: (916) 654-6410 or TDD (916) 654-3880 or write Records and Forms Management, 1120 N Street, MS-89, Sacramento, CA 95814.

CONTRACT CHANGE ORDER

Change Requested by: Engineer

CCO: 104	Suppl. No. 2	Contract No. 04 - 0120R4	Road SF-80-12.6/13.2	FED. AID LOC.:

To: CC MYERS INC

You are directed to make the following changes from the plans and specifications or do the following described work not included in the plans and specifications for this contract. ***NOTE: This change order is not effective until approved by the Engineer.***

Description of work to be done, estimate of quantities and prices to be paid. (Segregate between additional work at contract price, agreed price and force account.) Unless otherwise stated, rates for rental of equipment cover only such time as equipment is actually used and no allowance will be made for idle time. This last percentage shown is the net accumulated increase or decrease from the original quantity in the Engineer's Estimate.

Extra Work at Force Account:

Provide additional funds for the work specified under the original Change Order No.104.

Estimated cost of Extra Work at Force Account $50,000.00

Estimated Cost: Increase ☑ Decrease ☐ **$50,000.00**

By reason of this order the time of completion will be adjusted as follows: 0 days

Submitted by		
Signature Jeannie Balderrama	**Resident Engineer** JEANNIE BALDERRAMOS	**Date** 6/24/10
Approved/Recommended by		
Signature Deanna Vilcheck	**Area Construction Manager** DEANNA VILCHECK	**Date** 6/24/10
Highway Approved by		
Signature Deanna Vilcheck	**Area Construction Manager** DEANNA VILCHECK	**Date** 7/2/10

We the undersigned contractor, have given careful consideration to the change proposed and agree, if this proposal is approved, that we will provide all equipment, furnish the materials, except as may otherwise be noted above, and perform all services necessary for the work above specified, and will accept as full payment therefor the prices shown above.

NOTE: If you, the contractor, do not sign acceptance of this order, your attention is directed to the requirements of the specifications as to proceeding with the ordered work and filing a written protest within the time therein specified.

Contractor Accepted by		
Signature N/A	**(Print name and title)** —	**Date** —

CONTRACT CHANGE ORDER

Change Requested by: Engineer

CCO 105	Suppl. No. 0	Contract No. 04 - 0120R4	Road SF-80-12.6/13.2	FED. AID LOC.: ACBRIM-080-1(097)N

To: **CC MYERS INC**

You are directed to make the following changes from the plans and specifications or do the following described work not included in the plans and specifications for this contract. ***NOTE: This change order is not effective until approved by the Engineer.***

Description of work to be done, estimate of quantities and prices to be paid. (Segregate between additional work at contract price, agreed price and force account.) Unless otherwise stated, rates for rental of equipment cover only such time as equipment is actually used and no allowance will be made for idle time. This last percentage shown is the net accumulated increase or decrease from the original quantity in the Engineer's Estimate.

Extra Work at Force Account:

As authorized by the Engineer, provide for the following post-fabrication modifications to the Viaduct steel truss as required due to the design enhancements incorporated into the approved Viaduct plans dated July 19, 2007:

1) Provide for the fabrication of the temporary lateral stringer and floor beam bracing, including sway brackets and mounting brackets.
2) Modify the Span 48 through 51 exterior stringers and floor beam connection and provide for the fabrication of the bent plate and seating connection for the modified exterior stringer connection to the floor beam.
3) Provide for the fabrication of the additional lateral bracing between Floor Beams No. 9 and No. 10 and modify the lateral bracing openings and the stiffeners at the lateral connections concerning floor beams No. 8, 9, 10, 15 and 16.
4) Provide for the review and approval of shop drawings by the Engineer of Record.

Payment will be in accordance with Section 4-1.03D, Extra Work, of the Standard Specifications, and Section 5-1.24, Force Account Payment, of the Special Provisions, and no other compensation will be allowed therefor.

Estimated Cost of Extra Work at Force Account $600,000.00

Adjustment of Compensation at Lump Sum:

Provide compensation to the Contractor for additional steel fabrication work to be performed by Dongkuk Structures & Construction Co., Ltd (Dongkuk) pertaining to Department ordered design enhancements to the steel truss of the Viaduct o the Temporary Bypass Structure (Bridge No. 34-0006 (TEMP)) that were incorporated into the approved Viaduct plans (Sheets 1 through 112) dated July 19, 2007.

The work to be performed by Dongkuk includes, but is not limited to, the modifications to Span 51 pertaining to the redesig of the cantilever section, modifications to the exterior stringer connection to the floor beam, modifications to the top lateral bracing, and the addition of support brackets and appurtenances to support the 300 NPS water line.

Except for the 2 excluded items of costs listed below, the Contractor will be compensated a lump sum of $1,540,640.00 for this work which will constitute as full compensation for all additional fabrication and delay costs incurred by Dongkuk, including all markups, due to all Department ordered design enhancements to the Viaduct structure pertaining to the approved Viaduct plans dated July 19, 2007.

The following 2 items are excluded from the compensation provided herein and shall be compensated separately from this change order:

1) Costs associated with the purchase and delivery of raw steel to the fabricator.
2) Costs associated with the shipment of the fabricated steel from South Korea to the project site.

Total Cost of Adjustment of Compensation at Lump Sum $1,540,640.00

CONTRACT CHANGE ORDER

Change Requested by: Engineer

CCO 105	Suppl. No. 0	Contract No. 04 - 0120R4	Road SF-80-12.6/13.2	FED. AID LOC.: ACBRIM-080-1(097)N

Estimated Cost: Increase ☑ Decrease ☐ $2,140,640.00

By reason of this order the time of completion will be adjusted as follows: Deferred

Submitted by

Signature	Resident Engineer	Date
	BILL CASEY	3-27-08

Approval Recommended by

Signature	SFOBB Construction Manager	Date
DM for:	MIKE FORNER	3/28/08

Engineer Approval by

Signature	SFOBB Construction Manager	Date
Michael Forner	MIKE FORNER	4-17-08

We the undersigned contractor, have given careful consideration to the change proposed and agree, if this proposal is approved, that we will provide all equipment, furnish the materials, except as may otherwise be noted above, and perform all services necessary for the work above specified, and will accept as full payment therefor the prices shown above.

NOTE: If you, the contractor, do not sign acceptance of this order, your attention is directed to the requirements of the specifications as to proceeding with the ordered work and filing a written protest within the time therein specified.

Contractor Acceptance by

Signature	(Print name and title)	Date
D E Himick	DANIEL E HIMICK, PRESIDENT	4/14/08

STATE OF CALIFORNIA - DEPARTMENT OF TRANSPORTATION

CONTRACT CHANGE ORDER MEMORANDUM

RECEIVED
DATE: 3/19/2008 Page 1 of 2

TO: MIKE FORNER / DENNIS TURCHON	FILE: E.A. 04 - 0120R4 CO-RTE-PM SF-80-12.6/13.2 FED. NO. ACBRIM-080-1(097)N
FROM: BILL CASEY	007646 JUN 20 8
CCO#: 105 SUPPLEMENT#: 0 Category Code: CHXX	CONTINGENCY BALANCE (incl. this change) $59,840,918.82
COST: $2,140,640.00 INCREASE ☑ DECREASE ☐	HEADQUARTERS APPROVAL REQUIRED? ☑ YES ☐ NO
SUPPLEMENTAL FUNDS PROVIDED: $0.00	IS THIS REQUEST IN ACCORDANCE WITH ENVIRONMENTAL DOCUMENTS? ☑ YES ☐ NO
CCO DESCRIPTION: Dongkuk Fabrication Costs July '07 Plans	**PROJECT DESCRIPTION:** CONSTRUCT ROUTE 80 TEMP BYPASS STRUCTURE

Original Contract Time:	Time Adj. This Change:	Previously Approved CCO Time Adjustments:	Percentage Time Adjusted: (including this change)	Total # of Unreconciled Deferred Time CCO(s): (including this change)
475 Day(s)	DEF Day(s)	1195 Day(s)	252 %	8

THIS CHANGE ORDER PROVIDES FOR:

compensation to the contractor for additional costs related to design enhancements implemented by the Department concerning the viaduct steel truss.

This contract was awarded to construct a temporary detour for both eastbound and westbound I-80 traffic that allows for the tie in of the east span of the new San Francisco Oakland Bay Bridge (SFOBB) to Yerba Buena Island. The detour consist of three main structures, the East Tie-In (ETI) to the bridge, the West Tie-In to the island, and the Viaduct structure between the two tie ins. The contract was awarded as a performance based project with the contractor responsible for meeting the design criteria specified in the contract.

The viaduct consists of 4 spans of a double deck steel truss approximately 20 meters wide and 320 meters long with a weight of over 4,300 metric tons. This change order concerns additional steel fabrication costs pertaining to Department design enhancements to the Viaduct structure that were incorporated into the approved Viaduct plans dated July 19, 2007. Change Order No. 79 provided compensation for Department ordered design changes to the Viaduct based on the approved plan sheets dated October 9, 2006. This change order provides compensation for Department ordered changes incorporated into the plans after the October 9, 2006 plans were issued.

The major design changes incorporated into the July 19, 2007 plans include a complete redesign of the Span 51 cantilever section that abuts the ETI structure to provide for an improved conform between those 2 structures, the addition of temporary bracing to account for stresses on the structure during the concrete deck placement, and various modifications to the structure's floor beams and stringers to provide for an improved structure performance.

The majority of the additional work shall be performed by the contractor's fabricator Dongkuk Structures & Construction Co., Ltd (Dongkuk), located in South Korea, prior to shipment of the steel to the project site. Some modification to the stringers and floor beams shall be performed after the steel has been delivered to the project site in order to avoid delays to the structure's erection. Fabrication of the temporary bracing shall be performed locally as well.

Compensation for the work performed by Dongkuk in South Korea shall be paid as an adjustment of compensation at an agreed lump sum of $1,540,640.00. Work concerning modifications made after shipment of the steel to the project and additional shop drawing review costs shall be paid as extra work at force account for an estimated cost of $600,000.00. The total estimated cost of $2,140,640.00 shall be financed from the contract's contingency funds. A cost estimate is on file.

Costs concerning the procurement of raw steel required for the work are being paid under the previously approved Change Order No. 100. Additional shipping cost pertaining to the changes shall also be paid separately.

Adjustment of contract time is deferred as the work may affect the controlling operation.

This change was requested by Tom Ostrom - Office Chief, Structures Design, per Memorandum on July 3, 2007 and concurred by Alec Melkonians - Asst. Project Manager, and Robert Kobal - HQ Assistant Construction Coordinator.

Maintenance concurrence is not required as the viaduct is a temporary structure and doesn't affect any permanent roadway features.

ADA Notice: For individuals with sensory disabilities, this document is available in alternate formats. For information call: (916) 654-6410 or TDD (916) 654-3880 or write Records and Forms Management, 1120 N Street, MS-89, Sacramento, CA 95814.

CONCURRED BY:			
Construction Engineer:		Date	
Bridge Engineer:	Tom Ostrom, OSD	Date	7/3/07
Project Engineer:		Date	
Project Manager:	Alec Melkonians	Date	3/25/08
FHWA Rep.:		Date	
Environmental:		Date	
Other (specify):	Robert Kobal, HQ Asst.Const.Coor	Date	3/28/08
Other (specify):		Date	
District Prior Approval By:		Date	
HQ (Issue Approve) By:	Ken Darby, HQ CCO Engineer	Date	
Resident Engineer's Signature:		Date	3-27-08

ESTIMATE OF COST

	THIS REQUEST	TOTAL TO DATE
ITEMS	$0.00	$0.00
FORCE ACCOUNT	$600,000.00	$600,000.00
AGREED PRICE	$0.00	$0.00
ADJUSTMENT	$1,540,640.00	$1,540,640.00
TOTAL	$2,140,640.00	$2,140,640.00

FEDERAL PARTICIPATION

☐ PARTICIPATING ☐ PARTICIPATING IN PART ☐ NONE
☐ NON-PARTICIPATING (MAINTENANCE) ☑ NON-PARTICIPATING

FEDERAL SEGREGATION (if more than one Funding Source or P.I.P. type)
☑ CCO FUNDED PER CONTRACT ☐ CCO FUNDED AS FOLLOWS

FEDERAL FUNDING SOURCE	PERCENT

ADA Notice: For individuals with sensory disabilities, this document is available in alternate formats. For information call: (916) 654-6410 or TDD (916) 654-3880 or write Records and Forms Management, 1120 N Street, MS-89, Sacramento, CA 95814.

STATE OF CALIFORNIA - DEPARTMENT OF TRANSPORTATION

CONTRACT CHANGE ORDER

Change Requested by: Engineer

CCO: 105	Suppl. No. 1	Contract No. 04 - 0120R4	Road SF-80-12.6/13.2	FED. AID LOC.:

To: **CC MYERS INC**

You are directed to make the following changes from the plans and specifications or do the following described work not included in the plans and specifications for this contract. ***NOTE: This change order is not effective until approved by the Engineer.***

Description of work to be done, estimate of quantities and prices to be paid. (Segregate between additional work at contract price, agreed price and force account.) Unless otherwise stated, rates for rental of equipment cover only such time as equipment is actually used and no allowance will be made for idle time. This last percentage shown is the net accumulated increase or decrease from the original quantity in the Engineer's Estimate.

Extra Work at Force Account:

Provide additional funds for the work specified to be performed as extra work at force account under the original Change Order No. 105.

Estimated Cost of Extra Work at Force Account $250,000.00

Estimated Cost: **Increase** ☑ **Decrease** ☐ **$250,000.00**

By reason of this order the time of completion will be adjusted as follows: 0 days

Submitted by

Signature	Resident Engineer JEANNIE BALDERRAMOS	Date 7/20/10

Approval Recommended by

Signature	SFOBB Construction Manager MIKE FORNER	Date 7/20/10

Engineer Approval by

Signature	SFOBB Construction Manager MIKE FORNER	Date 7/23/10

We the undersigned contractor, have given careful consideration to the change proposed and agree, if this proposal is approved, that we will provide all equipment, furnish the materials, except as may otherwise be noted above, and perform all services necessary for the work above specified, and will accept as full payment therefor the prices shown above.

NOTE: If you, the contractor, do not sign acceptance of this order, your attention is directed to the requirements of the specifications as to proceeding with the ordered work and filing a written protest within the time therein specified.

Contractor Acceptance by

Signature	(Print name and title)	Date
NOT REQUIRED		

STATE OF CALIFORNIA - DEPARTMENT OF TRANSPORTATION

CONTRACT CHANGE ORDER

Change Requested by: Engineer

CCO 107	Suppl. No. 0	Contract No. 04 - 0120R4	Road SF-80-12.6/13.2	FED. AID LOC.: ACBRIM-080-1(097)N

To: CC MYERS INC

You are directed to make the following changes from the plans and specifications or do the following described work not included in the plans and specifications for this contract. ***NOTE: This change order is not effective until approved by the Engineer.***

Description of work to be done, estimate of quantities and prices to be paid. (Segregate between additional work at contract price, agreed price and force account.) Unless otherwise stated, rates for rental of equipment cover only such time as equipment is actually used and no allowance will be made for idle time. This last percentage shown is the net accumulated increase or decrease from the original quantity in the Engineer's Estimate.

Adjustment of Compensation at Lump Sum:

In accordance with Section 4-1.03 "Changes" of the contract Standard Specifications and Change Order No. 80, provide compensation to the Contractor for all costs associated with furnishing and placing steel piles for the falsework tower foundations being used for the erection of the steel truss (Span No. 48 through 51) of the Viaduct of the Temporary Bypass Structure (Bridge No. 34-0006 (TEMP)).

For this work, the Contractor will be compensated an agreed lump sum of $855,190.00. This sum constitutes full and final compensation for all costs, including all markups, for furnishing and installing the falsework.

Total Cost of Adjustment of Compensation at Agreed Lump Sum $855,190.00

Any costs or credit associated with the removal of the piles and their salvage value or disposal cost is excluded from this change order.

Estimated Cost: Increase ☑ Decrease ☐ **$855,190.00**

By reason of this order the time of completion will be adjusted as follows: 0 days

Submitted by

Signature	Resident Engineer	Date
	BILL CASEY	7-29-08

Approval Recommended by

Signature	Area Construction Manager	Date
Deanna Vilcheck	DEANNA VILCHECK	8/4/08

Engineer Approval by

Signature	Area Construction Manager	Date
Deanna Vilcheck	DEANNA VILCHECK	9/3/08

We the undersigned contractor, have given careful consideration to the change proposed and agree, if this proposal is approved, that we will provide all equipment, furnish the materials, except as may otherwise be noted above, and perform all services necessary for the work above specified, and will accept as full payment therefor the prices shown above.

NOTE: If you, the contractor, do not sign acceptance of this order, your attention is directed to the requirements of the specifications as to proceeding with the ordered work and filing a written protest within the time therein specified.

Contractor Acceptance by

Signature	(Print name and title)	Date
	DANIEL E. HANCK, PRESIDENT	8/26/08

CONTRACT CHANGE ORDER

Change Requested by: Engineer

CCO 108	Suppl. No. 0	Contract No. 04 - 0120R4	Road SF-80-12.6/13.2	FED. AID LOC.: ACBRIM-080-1(097)N

To: **CC MYERS INC**

You are directed to make the following changes from the plans and specifications or do the following described work not included in the plans and specifications for this contract. ***NOTE: This change order is not effective until approved by the Engineer.***

Description of work to be done, estimate of quantities and prices to be paid. (Segregate between additional work at contract price, agreed price and force account.) Unless otherwise stated, rates for rental of equipment cover only such time as equipment is actually used and no allowance will be made for idle time. This last percentage shown is the net accumulated increase or decrease from the original quantity in the Engineer's Estimate.

Extra Work at Lump Sum:

Perform the following work for the construction of the West Tie-In Phase 2 substructure of the Temporary Bypass Structure (Bridge No. 34-0006 (TEMP)) as shown on the plans and specifications of Pages No. 3 through 267 of this change order:

1) Construct all concrete footings and columns for Bents 38 through 47B.

2) Construct Abutment 47A and wall at Bent 48A (excluding deck slab).

3) Construct the jacking corbels on Bents 40, 41A, 41B and 42 of the existing YBI Viaduct and Column 46L of the West Tie-In Phase 2 structure.

4) Furnish and install all prestress bars, bearing plates, elastomeric bearing pads, shim plates, column pins, XS and XX-Strong pipes and all appurtenances necessary for the construction of the Bent 38 through 47B columns and footings.

5) Perform all structural backfill.

6) Perform bridge removal (portion) of the existing retaining wall and barrier associated with the construction of Abutment 47A.

7) Perform bridge removal (portion) of the existing Columns 40, 42 and 43 associated with the construction of the jacking corbels at those columns.

For this work, the Contractor shall be compensated a lump sum of $5,378,800.00. Except for the items of work specifically excluded below, this sum constitutes full and final compensation, including all markups, for all costs associated with the work of this change.

All work associated with the implementation and maintenance of the Contractor's Storm Water Pollution Prevention Plan and erosion control, including concrete washouts, shall be paid by the Department separately from this change order.

Flagging costs associated with this work shall be paid under Change Order No. 1 with these costs being paid at 50% by the Department. The remaining flagging costs are considered to be included in the lump sum payment made under this change order.

Furnishing and installing the elastomeric bearing pads and sheet metal for the interface between the edge beam and the existing south edge beam are excluded from this change order.

Work associated with the construction of the West Tie-In Phase 2 superstructure, including column bent caps, deck slab, edge beam and the south edge beam on the existing YBI Viaduct, are excluded from this change order.

Total Cost of Extra Work at Agreed Lump Sum $5,378,800.00

All payment clauses contained within the specifications of this change order are superseded by the agreed lump sum and

CONTRACT CHANGE ORDER

Change Requested by: Engineer

CCO 108	Suppl. No. 0	Contract No. 04 - 0120R4	Road SF-80-12.6/13.2	FED. AID LOC.: ACBRIM-080-1(097)N

force account payment methods specified above.

Estimated Cost: Increase ☑ Decrease ☐ $5,378,800.00

By reason of this order the time of completion will be adjusted as follows: Deferred

Submitted by

Signature	Resident Engineer	Date
	BILL CASEY	6-18-08

Approval Recommended by

Signature	SFOBB Construction Manager	Date
DENNIS TURCHON for:	MIKE FORNER	6/18/08

Engineer Approval by

Signature	SFOBB Construction Manager	Date
Michael Forner	MIKE FORNER	6/19/08

We the undersigned contractor, have given careful consideration to the change proposed and agree, if this proposal is approved, that we will provide all equipment, furnish the materials, except as may otherwise be noted above, and perform all services necessary for the work above specified, and will accept as full payment therefor the prices shown above.

NOTE: If you, the contractor, do not sign acceptance of this order, your attention is directed to the requirements of the specifications as to proceeding with the ordered work and filing a written protest within the time therein specified.

Contractor Acceptance by

Signature	(Print name and title)	Date
	DANIEL E. HAMICK, PRESIDENT	6/18/08

SFOBB TEMPORARY BYPASS STRUCTURE

WEST TIE-IN PHASE II

100% STRUCTURE SPECIFICATIONS

BRIDGE NO. 34-0006 (TEMP)

Location: 04-SF-80-12.6/13.2
EA No.: 0120R4

Project Title: South/South Detour – San Francisco-Oakland Bay Bridge

February 25, 2008

1 CONTRACT NO. 04-0120R4

CONTRACT CHANGE ORDER NO 108

SHEET 3 OF 267

CONTRACT NO. 04-0120R4

The special provisions contained herein have been prepared by or under the direction of the following Registered Persons.

STRUCTURES

Steve Margaris

REGISTERED CIVIL ENGINEER

CONTRACT NO. 04-0120R4

CONTRACT CHANGE ORDER NO 106

SHEET 4 OF 267

AMENDMENTS TO JULY 1999 STANDARD SPECIFICATIONS

UPDATED JANUARY 4, 2008

SECTION 0: GLOBAL REVISIONS

Issue Date: August 17, 2007

SECTION 1: DEFINITIONS AND TERMS

Issue Date: October 19, 2007

Section 1-1.01, "General," of the Standard Specifications is amended by adding the following:

• The Department is gradually changing the style and language of the specifications. The new style and language includes:

1. Use of:

    1.1. Imperative mood
    1.2. Introductory modifiers
    1.3. Conditional clauses

2. Elimination of:

    2.1. Language variations
    2.2. Definitions for industry-standard terms
    2.3. Redundant specifications
    2.4. Needless cross-references

• The use of this new style does not change the meaning of a specification not yet using this style.

• The specifications are written to the Bidder before award and the Contractor after. Before award, interpret sentences written in the imperative mood as starting with "The Bidder must" and interpret "you" as "the Bidder" and "your" as "the Bidder's." After award, interpret sentences written in the imperative mood as starting with "The Contractor must" and interpret "you" as "the Contractor" and "your" as "the Contractor's."

• Unless an object or activity is specified to be less than the total, the quantity or amount is all of the object or activity.

• All items in a list apply unless the items are specified as choices.

• Interpret terms as defined in the Contract documents. A term not defined in the Contract documents has the meaning defined in Means Illustrated Construction Dictionary, Condensed Version, Second Edition.

CONTRACT NO. 04-012024

CONTRACT CHANGE ORDER NO 108

SHEET 5 OF 267

The 1st table in Section 1-1.02, "Abbreviations," of the Standard Specifications is amended by adding:

SSPC	The Society for Protective Coatings

Section 1, "Definitions and Terms," of the Standard Specifications is amended by adding the following sections:

1-1.082 BUSINESS DAY

- Day on the calendar except Saturday or holiday.

1-1.084 CALIFORNIA MANUAL ON UNIFORM TRAFFIC CONTROL DEVICES

- The California Manual on Uniform Traffic Control Devices for Streets and Highways (California MUTCD) is issued by the Department of Transportation and is the Federal Highway Administration's MUTCD 2003 Edition, as amended for use in California. Part 6 of the California MUTCD, "Temporary Traffic Control," supersedes the Department's Manual of Traffic Controls.

1-1.125 DEDUCTION

- Amount of money permanently taken from progress payment and final payment. Deductions are cumulative and are not retentions under Pub Cont Code § 7107.

1-1.205 FEDERAL-AID CONTRACT

- Contract that has a Federal-aid project number on the cover of the Notice to Contractors and Special Provisions.

1-1.245 HOLIDAY

1. Every Sunday
2. January 1st, New Year's Day
3. 3rd Monday in January, Birthday of Martin Luther King, Jr.
4. February 12th, Lincoln's Birthday
5. 3rd Monday in February, Washington's Birthday
6. March 31st, Cesar Chavez Day
7. Last Monday in May, Memorial Day
8. July 4th, Independence Day
9. 1st Monday in September, Labor Day
10. 2nd Monday in October, Columbus Day
11. November 11th, Veterans Day
12. 4th Thursday in November, Thanksgiving Day
13. 4th Friday in November, Day after Thanksgiving Day
14. December 25th, Christmas Day

- If January 1st, February 12th, March 31st, July 4th, November 11th, or December 25th falls on a Sunday, the Monday following is a holiday. If November 11th falls on a Saturday, the preceding Friday is a holiday.

1-1.475 WITHHOLD

• Money temporarily or permanently taken from progress payment. Withholds are cumulative and are not retentions under Pub Cont Code § 7107.

Section 1-1.25, "Laboratory," of the Standard Specifications is amended to read:

1-1.25 LABORATORY

• The Division of Engineering Services - Materials Engineering and Testing Services and Division of Engineering Services - Geotechnical Services of the Department of Transportation, or established laboratories of the various Districts of the Department, or other laboratories authorized by the Department to test materials and work involved in the contract. When a reference is made in the specifications to the "Transportation Laboratory," the reference shall mean Division of Engineering Services - Materials Engineering and Testing Services and Division of Engineering Services - Geotechnical Services, located at 5900 Folsom Boulevard, Sacramento, CA 95819, Telephone (916) 227-7000.

Section 1-1.255, "Legal Holidays," of the Standard Specifications is deleted.

Section 1-1.265, "Manual of Traffic Controls," of the Standard Specifications is deleted.

Section 1-1.275, "Office of Structure Design," of the Standard Specifications is amended to read:

1-1.275 OFFICES OF STRUCTURE DESIGN

• The Offices of Structure Design of the Department of Transportation. When the specifications require working drawings to be submitted to the Offices of Structure Design, the drawings shall be submitted to: Offices of Structure Design, Documents Unit, Mail Station 9-4/4I, 1801 30th Street, Sacramento, CA 95816, Telephone (916) 227-8252.

Section 1-1.39, "State," of the Standard Specifications is amended to read:

1-1.39 STATE

• The State of California, including its agencies, departments, or divisions, whose conduct or action is related to the work.

SECTION 2: PROPOSAL REQUIREMENTS AND CONDITIONS

Issue Date: June 19, 2003

Section 2-1.03, "Examination of Plans, Specifications, Contract, and Site of Work," of the Standard Specifications is amended to read:

2-1.03 Examination of Plans, Specifications, Contract, and Site of Work

• The bidder shall examine carefully the site of the work contemplated, the plans and specifications, and the proposal and contract forms therefor. The submission of a bid shall be conclusive evidence that the bidder has investigated and is satisfied as to the general and local conditions to be encountered, as to the character, quality and scope of work to be performed, the

ONTRACT NO. 04-012024

CONTRACT CHANGE ORDER NO 108

HEET 7 OF 267

quantities of materials to be furnished and as to the requirements of the proposal, plans, specifications and the contract.

- The submission of a bid shall also be conclusive evidence that the bidder is satisfied as to the character, quality and quantity of surface and subsurface materials or obstacles to be encountered insofar as this information was reasonably ascertainable from an inspection of the site and the records of exploratory work done by the Department as shown in the bid documents, as well as from the plans and specifications made a part of the contract.
- Where the Department has made investigations of site conditions including subsurface conditions in areas where work is to be performed under the contract, or in other areas, some of which may constitute possible local material sources, bidders or contractors may, upon written request, inspect the records of the Department as to those investigations subject to and upon the conditions hereinafter set forth.
- Where there has been prior construction by the Department or other public agencies within the project limits, records of the prior construction that are currently in the possession of the Department and which have been used by, or are known to, the designers and administrators of the project will be made available for inspection by bidders or contractors, upon written request, subject to the conditions hereinafter set forth. The records may include, but are not limited to, as-built drawings, design calculations, foundation and site studies, project reports and other data assembled in connection with the investigation, design, construction and maintenance of the prior projects.
- Inspection of the records of investigations and project records may be made at the office of the district in which the work is situated, or in the case of records of investigations related to structure work, at the Transportation Laboratory in Sacramento, California.
- When a log of test borings or other record of geotechnical data obtained by the Department's investigation of surface and subsurface conditions is included with the contract plans, it is furnished for the bidders' or Contractor's information and its use shall be subject to the conditions and limitations set forth in this Section 2-1.03.
- In some instances, information considered by the Department to be of possible interest to bidders or contractors has been compiled as "Materials Information." The use of the "Materials Information" shall be subject to the conditions and limitations set forth in this Section 2-1.03 and Section 6-2, "Local Materials."
- When cross sections are not included with the plans, but are available, bidders or contractors may inspect the cross sections and obtain copies for their use, at their expense.
- When cross sections are included with the contract plans, it is expressly understood and agreed that the cross sections do not constitute part of the contract, do not necessarily represent actual site conditions or show location, character, dimensions and details of work to be performed, and are included in the plans only for the convenience of bidders and their use is subject to the conditions and limitations set forth in this Section 2-1.03.
- When contour maps were used in the design of the project, the bidders may inspect those maps, and if available, they may obtain copies for their use.
- The availability or use of information described in this Section 2-1.03 is not to be construed in any way as a waiver of the provisions of the first paragraph in this Section 2-1.03 and bidders and contractors are cautioned to make independent investigations and examinations as they deem necessary to be satisfied as to conditions to be encountered in the performance of the work and, with respect to possible local material sources, the quality and quantity of material available from the property and the type and extent of processing that may be required in order to produce material conforming to the requirements of the specifications.

CONTRACT NO. 04-012024

CONTRACT CHANGE ORDER NO 108

SHEET 8 OF 267

• The Department assumes no responsibility for conclusions or interpretations made by a bidder or contractor based on the information or data made available by the Department. The Department does not assume responsibility for representation made by its officers or agents before the execution of the contract concerning surface or subsurface conditions, unless that representation is expressly stated in the contract.

• No conclusions or interpretations made by a bidder or contractor from the information and data made available by the Department will relieve a bidder or contractor from properly fulfilling the terms of the contract.

SECTION 3: AWARD AND EXECUTION OF CONTRACT

Issue Date: August 17, 2007

Section 3, "Award and Execution of Contract," of the Standard Specifications is amended by adding the following section after Section 3-1.02, "Contract Bonds":

3-1.025 INSURANCE POLICIES

• The successful bidder shall submit:

1. Copy of its commercial general liability policy and its excess policy or binder until such time as a policy is available, including the declarations page, applicable endorsements, riders, and other modifications in effect at the time of contract execution. Standard ISO form No. CG 0001 or similar exclusions are allowed if not inconsistent with Section 7-1.12, "Indemnification and Insurance." Allowance of additional exclusions is at the discretion of the Department.
2. Certificate of insurance showing all other required coverages. Certificates of insurance, as evidence of required insurance for the auto liability and any other required policy, shall set forth deductible amounts applicable to each policy and all exclusions that are added by endorsement to each policy. The evidence of insurance shall provide that no cancellation, lapse, or reduction of coverage will occur without 10 days prior written notice to the Department.
3. A declaration under the penalty of perjury by a certified public accountant certifying the accountant has applied Generally Accepted Accounting Principles (GAAP) guidelines confirming the successful bidder has sufficient funds and resources to cover any self-insured retentions if the self-insured retention is $50 000 or higher.

• If the successful bidder uses any form of self-insurance for workers compensation in lieu of an insurance policy, it shall submit a certificate of consent to self-insure in accordance with the provisions of Section 3700 of the Labor Code.

Section 3-1.03, "Execution of Contract," of the Standard Specifications is amended to read:

3-1.03 EXECUTION OF CONTRACT

• The contract shall be signed by the successful bidder and returned, together with the contract bonds and the documents identified in Section 3-1.025, "Insurance Policies," within 10 business days of receiving the contract for execution.

Section 3-1.04, "Failure to Execute Contract," of the Standard Specifications is amended to read:

3-1.04 FAILURE TO EXECUTE CONTRACT

• Failure of the lowest responsible bidder, the second lowest responsible bidder, or the third lowest responsible bidder to execute the contract as required in Section 3-1.03, "Execution of Contract," within 10 business days of receiving the contract for execution shall be just cause for the forfeiture of the proposal guaranty. The successful bidder may file with the Department a written notice, signed by the bidder or the bidder's authorized representative, specifying that the bidder will refuse to execute the contract if it is presented. The filing of this notice shall have the same force and effect as the failure of the bidder to execute the contract and furnish acceptable bonds within the time specified.

Section 3-1.05, "Return of Proposal Guaranties," of the Standard Specifications is amended to read:

3-1.05 RETURN OF PROPOSAL GUARANTIES

• The Department keeps the proposal guaranties of the 1st, 2nd and 3rd lowest responsible bidders until the contract has been executed. The other bidders' guaranties, other than bidders' bonds, are returned upon determination of the 1st, 2nd, and 3rd apparent lowest bidders, and their bidders' bonds are of no further effect.

SECTION 4: SCOPE OF WORK

Issue Date: August 17, 2007

Section 4-1.01, "Intent of Plans and Specifications," of the Standard Specifications is amended by adding the following:

• Nothing in the specifications voids the Contractor's public safety responsibilities.

SECTION 5: CONTROL OF WORK

Issue Date: October 19, 2007

Section 5, "Control of Work," of the Standard Specifications is amended by adding the following sections:

5-1.005 GENERAL

• Failure to comply with any specification part is a breach of the contract and a waiver of your right to time or payment adjustment.

• After contract approval, submit documents and direct questions to the Engineer. Orders, approvals, and requests to the Contractor are by the Engineer.

• The Engineer furnishes the following in writing:

1. Approvals
2. Notifications

CONTRACT NO. 04-012024

CONTRACT CHANGE ORDER NO 108

SHEET 10 OF 267

3. Orders

- The Contractor must furnish the following in writing:

1. Assignments
2. Notifications
3. Proposals
4. Requests, sequentially numbered
5. Subcontracts
6. Test results

- The Department rejects a form if it has any error or any omission.
- Convert foreign language documents to English.
- Use contract administration forms available at the Department's Web site.
- If the last day for submitting a document falls on a Saturday or holiday, it may be submitted on the next business day with the same effect as if it had been submitted on the day specified.

5-1.015 RECORD RETENTION, INSPECTION, COPYING, AND AUDITING

- Retain project records and make them available for inspection, copying, and auditing by State representatives from bid preparation through:

1. Final payment
2. Resolution of claims, if any

- For at least 3 years after the later of these, retain and make available for inspection, copying, and auditing cost records by State representatives including:

1. Records pertaining to bid preparation
2. Overhead
3. Payroll records and certified payroll
4. Payments to suppliers and subcontractors
5. Cost accounting records
6. Records of subcontractors and suppliers

- Maintain the records in an organized way in the original format, electronic and hard copy, conducive to professional review and audit.
- Before contract acceptance, the State representative notifies the Contractor, subcontractor, or supplier 5 days before inspection, copying, or auditing.
- If an audit is to start more than 30 days after contract acceptance, the State representative notifies the Contractor, subcontractor, or supplier when the audit is to start.

Section 5-1.01, "Authority of Engineer," of the Standard Specifications is amended by adding:

- Failure to enforce a contract provision does not waive enforcement of any contract provision.

CONTRACT NO. 04-012024

CONTRACT CHANGE ORDER NO 108

SHEET 11 OF 267

Section 5-1.02A, "Trench Excavation Safety Plans," of the Standard Specifications is amended to read:

5-1.02A Excavation Safety Plans

• The Construction Safety Orders of the Division of Occupational Safety and Health shall apply to all excavations. For all excavations 1.5 m or more in depth, the Contractor shall submit to the Engineer a detailed plan showing the design and details of the protective systems to be provided for worker protection from the hazard of caving ground during excavation. The detailed plan shall include any tabulated data and any design calculations used in the preparation of the plan. Excavation shall not begin until the detailed plan has been reviewed and approved by the Engineer.

• Detailed plans of protective systems for which the Construction Safety Orders require design by a registered professional engineer shall be prepared and signed by an engineer who is registered as a Civil Engineer in the State of California, and shall include the soil classification, soil properties, soil design calculations that demonstrate adequate stability of the protective system, and any other design calculations used in the preparation of the plan.

• No plan shall allow the use of a protective system less effective than that required by the Construction Safety Orders.

• If the detailed plan includes designs of protective systems developed only from the allowable configurations and slopes, or Appendices, contained in the Construction Safety Orders, the plan shall be submitted at least 5 days before the Contractor intends to begin excavation. If the detailed plan includes designs of protective systems developed from tabulated data, or designs for which design by a registered professional engineer is required, the plan shall be submitted at least 3 weeks before the Contractor intends to begin excavation.

• Attention is directed to Section 7-1.01E, "Trench Safety."

Section 5-1.04, "Coordination and Interpretation of Plans, Standard Specifications, and Special Provisions," of the Standard Specifications is amended to read:

5-1.04 CONTRACT COMPONENTS

• A component in one contract part applies as if appearing in each. The parts are complementary and describe and provide for a complete work.

• If a discrepancy exists:

1. The governing ranking of contract parts in descending order is:

    1.1. Special provisions
    1.2. Project plans
    1.3. Revised Standard Plans
    1.4. Standard Plans
    1.5. Amendments to the Standard Specifications
    1.6. Standard Specifications
    1.7. Project information

2. Written numbers and notes on a drawing govern over graphics
3. A detail drawing governs over a general drawing
4. A detail specification governs over a general specification

5. A specification in a section governs over a specification referenced by that section

- If a discrepancy is found or confusion arises, request correction or clarification.

Section 5-1.07, "Lines and Grades," of the Standard Specifications is replaced with the following:

5-1.07 LINES AND GRADES

- The Engineer places stakes and marks under Chapter 12, "Construction Surveys," of the Department's Surveys Manual.
- Submit your request for Department-furnished stakes:

1. On a Request for Construction Stakes form. Ensure:

   1.1. Requested staking area is ready for stakes
   1.2. You use the stakes in a reasonable time

2. A reasonable time before starting an activity using the stakes

- Establish priorities for stakes and note priorities on the request.
- Preserve stakes and marks placed by the Engineer. If the stakes or marks are destroyed, the Engineer replaces them at the Engineer's earliest convenience and deducts the cost.

SECTION 6: CONTROL OF MATERIALS

Issue Date: August 17, 2007

Section 6-1.05, "Trade Names and Alternatives," of the Standard Specifications is amended to read:

6-1.05 Specific Brand or Trade Name and Substitution

- A reference to a specific brand or trade name establishes a quality standard and is not intended to limit competition. You may use a product that is equal to or better than the specified brand or trade name if approved.
- Submit a substitution request within a time period that:

1. Follows Contract award
2. Allows 30 days for review
3. Causes no delay

- Include substantiating data with the substitution request that proves the substitution:

1. Is of equal or better quality and suitability
2. Causes no delay in product delivery and installation

Section 6, "Control of Materials," of the Standard Specifications is amended by adding the following sections:

CONTRACT NO. 04-012024

CONTRACT CHANGE ORDER NO 108

SHEET 13 OF 267

6-1.085 BUY AMERICA (23 CFR 635.410)

• For a Federal-aid contract, furnish steel and iron materials to be incorporated into the work that are produced in the United States except:

1. Foreign pig iron and processed, pelletized, and reduced iron ore may be used in the domestic production of the steel and iron materials [60 Fed Reg 15478 (03/24/1995)]
2. If the total combined cost of the materials does not exceed the greater of 0.1 percent of the total bid or $2 500, material produced outside the United States may be used

• Production includes:

1. Processing steel and iron materials, including smelting or other processes that alter the physical form or shape (such as rolling, extruding, machining, bending, grinding, and drilling) or chemical composition
2. Coating application, including epoxy coating, galvanizing, and painting, that protects or enhances the value of steel and iron materials

• For steel and iron materials to be incorporated into the work, submit a Certificate of Compliance under Section 6-1.07, "Certificates of Compliance," of the Standard Specifications that certifies all production processes occurred in the United States except for the above exceptions.

6-1.087 BUY AMERICA (PUB RES CODE § 42703(d))

• Furnish crumb rubber to be incorporated into the work that is produced in the United States and is derived from waste tires taken from vehicles owned and operated in the United States.

• For crumb rubber to be incorporated into the work, submit a Certificate of Compliance under Section 6-1.07, "Certificates of Compliance," of the Standard Specifications that certifies only crumb rubber manufactured in the United States and derived from waste tires taken from vehicles owned and operated in the United States is used.

The 7th and 8th paragraph of Section 6-2.01, "General," of the Standard Specifications are amended to read:

• Upon the Contractor's written request, the Department tests materials from an untested local source. If satisfactory material from that source is used in the work, the Department does not charge the Contractor for the tests; otherwise, the Department deducts the test cost.

The 2nd sentence of the 7th paragraph of Section 6-2.02, "Possible Local Material Sources," of the Standard Specifications is amended to read:

• The Department deducts the charges for the removed material.

SECTION 7: LEGAL RELATIONS AND RESPONSIBILITY

Issue Date: August 17, 2007

CONTRACT NO. 04-612024

CONTRACT CHANGE ORDER NO 108

SHEET 14 OF 267

Section 7-1.01, "Laws To Be Observed," of the Standard Specifications is amended to read:

7-1.01 LAWS TO BE OBSERVED

• Comply with laws, orders, decrees, and permits. Indemnify and defend the State against any claim or liability arising from the violation of a law, order, decree, or permit by you or your employees. Immediately report to the Engineer in writing a discrepancy or inconsistency between the contract and a law, order, decree, or permit.

The 3rd listed requirement of the 1st paragraph of Section 7-1.01A(2), "Prevailing Wage," of the Standard Specifications is amended to read:

3. Upon becoming aware of the subcontractor's failure to pay the specified prevailing rate of wages to the subcontractor's workers, the Contractor must diligently take corrective action to stop or rectify the failure, including withholding sufficient funds due the subcontractor for work performed on the public works project.

The 2nd paragraph of Section 7-1.01A(2), "Prevailing Wage," of the Standard Specifications is amended to read:

• Pursuant to Section 1775 of the Labor Code, the Division of Labor Standards Enforcement must notify the Contractor on a public works project within 15 days of the receipt by the Division of Labor Standards Enforcement of a complaint of the failure of a subcontractor on that public works project to pay workers the general prevailing rate of per diem wages. If the Division of Labor Standards Enforcement determines that employees of a subcontractor were not paid the general prevailing rate of per diem wages and if the Department did not withhold sufficient money under the contract to pay those employees the balance of wages owed under the general prevailing rate of per diem wages, the Contractor must withhold an amount of moneys due the subcontractor sufficient to pay those employees the general prevailing rate of per diem wages if requested by the Division of Labor Standards Enforcement. The Contractor must pay any money withheld from and owed to a subcontractor upon receipt of notification by the Division of Labor Standards Enforcement that the wage complaint has been resolved. If notice of the resolution of the wage complaint has not been received by the Contractor within 180 days of the filing of a valid notice of completion or acceptance of the public works project, whichever occurs later, the Contractor must pay all moneys withheld from the subcontractor to the Department. The Department withholds these moneys pending the final decision of an enforcement action.

The 2nd paragraph of Section 7-1.01A(3), "Payroll Records," of the Standard Specifications is amended to read:

• The Department withholds the penalties specified in subdivision (g) of Labor Code § 1776 for noncompliance with the requirements in Section 1776.

The 4th paragraph of Section 7-1.01A(3), "Payroll Records," of the Standard Specifications is amended to read:

• The Department withholds for delinquent or inadequate payroll records (Labor Code § 1771.5). If the Contractor has not submitted an adequate payroll record by the month's 15th day

for the period ending on or before the 1st of that month, the Department withholds 10 percent of the monthly progress estimate, exclusive of mobilization. The Department does not withhold more than $10 000 or less than $1000.

The 5th paragraph of Section 7-1.01A(3), "Payroll Records," of the Standard Specifications is deleted.

The eighth paragraph of Section 7-1.09, "Public Safety," of the Standard Specifications is amended to read:

• Signs, lights, flags, and other warning and safety devices and their use shall conform to the requirements set forth in Part 6 of the California MUTCD. Signs or other protective devices furnished and erected by the Contractor, at the Contractor's expense, as above provided, shall not obscure the visibility of, nor conflict in intent, meaning and function of either existing signs, lights and traffic control devices or any construction area signs and traffic control devices for which furnishing of, or payment for, is provided elsewhere in the specifications. Signs furnished and erected by the Contractor, at the Contractor's expense, shall be approved by the Engineer as to size, wording and location.

The fourteenth paragraph of Section 7-1.09, "Public Safety," of the Standard Specifications is amended to read:

• The Contractor shall notify the Engineer not less than 18 days and no more than 90 days prior to the anticipated start of an operation that will change the vertical or horizontal clearance available to public traffic (including shoulders).

The sixteenth paragraph of Section 7-1.09, "Public Safety," of the Standard Specifications is amended to read:

• When vertical clearance is temporarily reduced to 4.72 m or less, low clearance warning signs shall be placed in accordance with Part 2 of the California MUTCD and as directed by the Engineer. Signs shall conform to the dimensions, color, and legend requirements of the California MUTCD and these specifications except that the signs shall have black letters and numbers on an orange retroreflective background. W12-2P signs shall be illuminated so that the signs are clearly visible.

Section 7-1.01A(6), "Workers' Compensation," of the Standard Specifications is amended to read:

7-1.101A(6) (Blank)

The last sentence of the 2nd paragraph of Section 7-1.11, "Preservation of Property," of the Standard Specifications is amended to read:

• The cost of the repairs must be borne by the Contractor and will be deducted.

Section 7-1.12, "Indemnification and Insurance," of the Standard Specifications is amended to read:

CONTRACT NO. 04-012024

CONTRACT CHANGE ORDER NO 1086

SHEET 110 OF 267

7-1.12 INDEMNIFICATION AND INSURANCE

• The Contractor's obligations regarding indemnification of the State of California and the requirements for insurance shall conform to the provisions in Section 3-1.025, "Insurance Policies," and Sections 7-1.12A, "Indemnification," and 7-1.12B, "Insurance," of this Section 7-1.12.

7-1.12A Indemnification

• The Contractor shall defend, indemnify, and save harmless the State, including its officers, employees, and agents (excluding agents who are design professionals) from any and all claims, demands, causes of action, damages, costs, expenses, actual attorneys' fees, losses or liabilities, in law or in equity (Section 7-1.12A Claims) arising out of or in connection with the Contractor's performance of this contract for:

1. Bodily injury including, but not limited to, bodily injury, sickness or disease, emotional injury or death to persons, including, but not limited to, the public, any employees or agents of the Contractor, the State, or any other contractor; and
2. Damage to property of anyone including loss of use thereof; caused or alleged to be caused in whole or in part by any negligent or otherwise legally actionable act or omission of the Contractor or anyone directly or indirectly employed by the Contractor or anyone for whose acts the Contractor may be liable.

• Except as otherwise provided by law, these requirements apply regardless of the existence or degree of fault of the State. The Contractor is not obligated to indemnify the State for Claims arising from conduct delineated in Civil Code Section 2782 and to Claims arising from any defective or substandard condition of the highway that existed at or before the start of work, unless this condition has been changed by the work or the scope of the work requires the Contractor to maintain existing highway facilities and the Claim arises from the Contractor's failure to maintain. The Contractor's defense and indemnity obligation shall extend to Claims arising after the work is completed and accepted if the Claims are directly related to alleged acts or omissions by the Contractor that occurred during the course of the work. State inspection is not a waiver of full compliance with these requirements.

• The Contractor's obligation to defend and indemnify shall not be excused because of the Contractor's inability to evaluate liability or because the Contractor evaluates liability and determine that the Contractor is not liable. The Contractor shall respond within 30 days to the tender of any Claim for defense and indemnity by the State, unless this time has been extended by the State. If the Contractor fails to accept or reject a tender of defense and indemnity within 30 days, in addition to any other remedy authorized by law, the Department may withhold such funds the State reasonably considers necessary for its defense and indemnity until disposition has been made of the Claim or until the Contractor accepts or rejects the tender of defense, whichever occurs first.

• With respect to third-party claims against the Contractor, the Contractor waives all rights of any type to express or implied indemnity against the State, its officers, employees, or agents (excluding agents who are design professionals).

• Nothing in the Contract is intended to establish a standard of care owed to any member of the public or to extend to the public the status of a third-party beneficiary for any of these indemnification specifications.

7-1.12B Insurance

7-1.12B(1) General

• Nothing in the contract is intended to establish a standard of care owed to any member of the public or to extend to the public the status of a third-party beneficiary for any of these insurance specifications.

7-1.12B(2) Casualty Insurance

• The Contractor shall procure and maintain insurance on all of its operations with companies acceptable to the State as follows:

1. The Contractor shall keep all insurance in full force and effect from the beginning of the work through contract acceptance.
2. All insurance shall be with an insurance company with a rating from A.M. Best Financial Strength Rating of A- or better and a Financial Size Category of VII or better.
3. The Contractor shall maintain completed operations coverage with a carrier acceptable to the State through the expiration of the patent deficiency in construction statute of repose set forth in Code of Civil Procedure Section 337.1.

7-1.12B(3) Workers' Compensation and Employer's Liability Insurance

• In accordance with Labor Code Section 1860, the Contractor shall secure the payment of worker's compensation in accordance with Labor Code Section 3700.

• In accordance with Labor Code Section 1861, the Contractor shall submit to the Department the following certification before performing the work:

> I am aware of the provisions of Section 3700 of the Labor Code which require every employer to be insured against liability for workers' compensation or to undertake self-insurance in accordance with the provisions of that code, and I will comply with such provisions before commencing the performance of the work of this contract.

• Contract execution constitutes certification submittal.
• The Contractor shall provide Employer's Liability Insurance in amounts not less than:

1. $1 000 000 for each accident for bodily injury by accident
2. $1 000 000 policy limit for bodily injury by disease
3. $1 000 000 for each employee for bodily injury by disease

• If there is an exposure of injury to the Contractor's employees under the U.S. Longshoremen's and Harbor Workers' Compensation Act, the Jones Act, or under laws, regulations, or statutes applicable to maritime employees, coverage shall be included for such injuries or claims.

7-1.12B(4) Liability Insurance

7-1.12B(4)(a) General

• The Contractor shall carry General Liability and Umbrella or Excess Liability Insurance covering all operations by or on behalf of the Contractor providing insurance for bodily injury liability and property damage liability for the following limits and including coverage for:

CONTRACT NO. 04-0Q20R4

CONTRACT CHANGE ORDER NO 106

SHEET 16 OF 267

1. Premises, operations, and mobile equipment
2. Products and completed operations
3. Broad form property damage (including completed operations)
4. Explosion, collapse, and underground hazards
5. Personal injury
6. Contractual liability

7-1.12B(4)(b) Liability Limits/Additional Insureds

- The limits of liability shall be at least the amounts shown in the following table:

Total Bid	For Each Occurrence[1]	Aggregate for Products/Completed Operation	General Aggregate[2]	Umbrella or Excess Liability[3]
≤$1 000 000	$1 000 000	$2 000 000	$2 000 000	$5 000 000
>$1 000 000 ≤$5 000 000	$1 000 000	$2 000 000	$2 000 000	$10 000 000
>$5 000 000 ≤$25 000 000	$2 000 000	$2 000 000	$4 000 000	$15 000 000
>$25 000 000	$2 000 000	$2 000 000	$4 000 000	$25 000 000

1. Combined single limit for bodily injury and property damage.
2. This limit shall apply separately to the Contractor's work under this contract.
3. The umbrella or excess policy shall contain a clause stating that it takes effect (drops down) in the event the primary limits are impaired or exhausted.

- The Contractor shall not require certified Small Business subcontractors to carry Liability Insurance that exceeds the limits in the table above. Notwithstanding the limits specified herein, at the option of the Contractor, the liability insurance limits for certified Small Business subcontractors of any tier may be less than those limits specified in the table. For Small Business subcontracts, "Total Bid" shall be interpreted as the amount of subcontracted work to a certified Small Business.
- The State, including its officers, directors, agents (excluding agents who are design professionals), and employees, shall be named as additional insureds under the General Liability and Umbrella Liability Policies with respect to liability arising out of or connected with work or operations performed by or on behalf of the Contractor under this contract. Coverage for such additional insureds does not extend to liability:

1. Arising from any defective or substandard condition of the roadway which existed at or before the time the Contractor started work, unless such condition has been changed by the work or the scope of the work requires the Contractor to maintain existing roadway facilities and the claim arises from the Contractor's failure to maintain;
2. For claims occurring after the work is completed and accepted unless these claims are directly related to alleged acts or omissions of the Contractor that occurred during the course of the work; or
3. To the extent prohibited by Insurance Code Section 11580.04

- Additional insured coverage shall be provided by a policy provision or by an endorsement providing coverage at least as broad as Additional Insured (Form B) endorsement form CG 2010, as published by the Insurance Services Office (ISO), or other form designated by the Department.

CONTRACT NO. 04-012624

CONTRACT CHANGE ORDER NO 108

SHEET 19 OF 267

7-1.12B(4)(c) Contractor's Insurance Policy is Primary

• The policy shall stipulate that the insurance afforded the additional insureds applies as primary insurance. Any other insurance or self-insurance maintained by the State is excess only and shall not be called upon to contribute with this insurance.

7-1.12B(5) Automobile Liability Insurance

• The Contractor shall carry automobile liability insurance, including coverage for all owned, hired, and nonowned automobiles. The primary limits of liability shall be not less than $1 000 000 combined single limit each accident for bodily injury and property damage. The umbrella or excess liability coverage required under Section 7-1.12B(4)(b) also applies to automobile liability.

7-1.12B(6) Policy Forms, Endorsements, and Certificates

• The Contractor shall provide its General Liability Insurance under Commercial General Liability policy form No. CG0001 as published by the Insurance Services Office (ISO) or under a policy form at least as broad as policy form No. CG0001.

7-1.12B(7) Deductibles

• The State may expressly allow deductible clauses, which it does not consider excessive, overly broad, or harmful to the interests of the State. Regardless of the allowance of exclusions or deductions by the State, the Contractor is responsible for any deductible amount and shall warrant that the coverage provided to the State is in accordance with Section 7-1.12B, "Insurance."

7-1.12B(8) Enforcement

• The Department may assure the Contractor's compliance with its insurance obligations. Ten days before an insurance policy lapses or is canceled during the contract period, the Contractor shall submit to the Department evidence of renewal or replacement of the policy.

• If the Contractor fails to maintain any required insurance coverage, the Department may maintain this coverage and withhold or charge the expense to the Contractor or terminate the Contractor's control of the work in accordance with Section 8-1.08, "Termination of Control."

• The Contractor is not relieved of its duties and responsibilities to indemnify, defend, and hold harmless the State, its officers, agents, and employees by the Department's acceptance of insurance policies and certificates.

• Minimum insurance coverage amounts do not relieve the Contractor for liability in excess of such coverage, nor do they preclude the State from taking other actions available to it, including the withholding of funds under this contract.

7-1.12B(9) Self-Insurance

• Self-insurance programs and self-insured retentions in insurance policies are subject to separate annual review and approval by the State.

• If the Contractor uses a self-insurance program or self-insured retention, the Contractor shall provide the State with the same protection from liability and defense of suits as would be afforded by first-dollar insurance. Execution of the contract is the Contractor's acknowledgement that the Contractor will be bound by all laws as if the Contractor were an insurer as defined under

CONTRACT NO. 04-012024

CONTRACT CHANGE ORDER NO 108

SHEET 20 OF 267

Insurance Code Section 23 and that the self-insurance program or self-insured retention shall operate as insurance as defined under Insurance Code Section 22.

SECTION 8: PROSECUTION AND PROGRESS

Issue Date: August 17, 2007

The 2nd paragraph of Section 8-1.02, "Assignment," of the Standard Specifications is amended to read:

• If the Contractor assigns the right to receive contract payments, the Department accepts the assignment upon the Engineer's receipt of a notice. Assigned payments remain subject to deductions and withholds described in the contract. The Department may use withheld payments for work completion whether payments are assigned or not.

SECTION 9: MEASUREMENT AND PAYMENT

Issue Date: August 17, 2007

The last sentence of the 1st paragraph of Section 9-1.02, "Scope of Payment," of the Standard Specifications is amended to read:

• Neither the payment of any estimate nor of any retained percentage or withhold relieves the Contractor of any obligation to make good any defective work or material.

The third paragraph of Section 9-1.03, "Work Performed by Contractor," of the Standard Specifications is amended to read:

• The above markups shall constitute full compensation for all delay costs, overhead costs and profit which shall be deemed to include all items of expense not specifically designated as cost or equipment rental in Sections 9-1.03A(1), "Labor," 9-1.03A(2), "Materials," and 9-1.03A(3), "Equipment Rental." The total payment made as provided above shall be deemed to be the actual cost of the work and shall constitute full compensation therefor.

The 6th paragraph of Section 9-1.03C, "Records," of the Standard Specifications is deleted.

Section 9-1.04, "Notice of Potential Claim," of the Standard Specifications is amended to read:

9-1.04 NOTICE OF POTENTIAL CLAIM

• It is the intention of this section that disputes between the parties arising under and by virtue of the contract be brought to the attention of the Engineer at the earliest possible time in order that the matters may be resolved, if possible, or other appropriate action promptly taken.

• Disputes will not be considered unless the Contractor has first complied with specified notice or protest requirements, including Section 4-1.03, "Changes," Section 5-1.116, "Differing Site Conditions," Section 8-1.06, "Time of Completion," Section 8-1.07, "Liquidated Damages," and Section 8-1.10, "Utility and Non-Highway Facilities."

CONTRACT NO. 04-012204

CONTRACT CHANGE ORDER NO 108

SHEET 21 OF 267

- For disputes arising under and by virtue of the contract, including an act or failure to act by the Engineer, the Contractor shall provide a signed written initial notice of potential claim to the Engineer within 5 days from the date the dispute first arose. The initial notice of potential claim shall provide the nature and circumstances involved in the dispute which shall remain consistent through the dispute. The initial notice of potential claim shall be submitted on Form CEM-6201A furnished by the Department and shall be certified with reference to the California False Claims Act, Government Code Sections 12650-12655. The Contractor shall assign an exclusive identification number for each dispute, determined by chronological sequencing, based on the date of the dispute.
- The exclusive identification number for each dispute shall be used on the following corresponding documents:

1. Initial notice of potential claim
2. Supplemental notice of potential claim
3. Full and final documentation of potential claim
4. Corresponding claim included in the Contractor's written statement of claims

- The Contractor shall provide the Engineer the opportunity to examine the site of work within 5 days from the date of the initial notice of potential claim. The Contractor shall proceed with the performance of contract work unless otherwise specified or directed by the Engineer.
- Throughout the disputed work, the Contractor shall maintain records that provide a clear distinction between the incurred direct costs of disputed work and that of undisputed work. The Contractor shall allow the Engineer access to the Contractor's project records deemed necessary by the Engineer to evaluate the potential claim within 20 days of the date of the Engineer's written request.
- Within 15 days of submitting the initial notice of potential claim, the Contractor shall provide a signed supplemental notice of potential claim to the Engineer that provides the following information:

1. The complete nature and circumstances of the dispute which caused the potential claim
2. The contract provisions that provide the basis of claim
3. The estimated cost of the potential claim, including an itemized breakdown of individual costs and how the estimate was determined
4. A time impact analysis of the project schedule that illustrates the effect on the scheduled completion date due to schedule changes or disruptions where a request for adjustment of contract time is made

- The information provided in items 1 and 2 above shall provide the Contractor's complete reasoning for additional compensation or adjustments.
- The supplemental notice of potential claim shall be submitted on Form CEM-6201B furnished by the Department and shall be certified with reference to the California False Claims Act, Government Code Sections 12650-12655. The Engineer will evaluate the information presented in the supplemental notice of potential claim and provide a written response to the Contractor within 20 days of its receipt. If the estimated cost or effect on the scheduled completion date changes, the Contractor shall update information in items 3 and 4 above as soon as the change is recognized and submit this information to the Engineer.

• Within 30 days of the completion of work related to the potential claim, the Contractor shall provide the full and final documentation of potential claim to the Engineer that provides the following information:

1. A detailed factual narration of events fully describing the nature and circumstances that caused the dispute, including, but not limited to, necessary dates, locations, and items of work affected by the dispute
2. The specific provisions of the contract that support the potential claim and a statement of the reasons these provisions support and provide a basis for entitlement of the potential claim
3. When additional monetary compensation is requested, the exact amount requested calculated in conformance with Section 9-1.03, "Force Account Payment," or Section 8-1.09, "Right of Way Delays," including an itemized breakdown of individual costs. These costs shall be segregated into the following cost categories:

    3.1. Labor – A listing of individuals, classifications, regular hours and overtime hours worked, dates worked, and other pertinent information related to the requested reimbursement of labor costs
    3.2. Materials – Invoices, purchase orders, location of materials either stored or incorporated into the work, dates materials were transported to the project or incorporated into the work, and other pertinent information related to the requested reimbursement of material costs
    3.3. Equipment – Listing of detailed description (make, model, and serial number), hours of use, dates of use and equipment rates. Equipment rates shall be at the applicable State rental rate as listed in the Department of Transportation publication entitled "Labor Surcharge and Equipment Rental Rates," in effect when the affected work related to the dispute was performed.
    3.4. Other categories as specified by the Contractor or the Engineer

4. When an adjustment of contract time is requested the following information shall be provided:

    4.1. The specific dates for which contract time is being requested
    4.2. The specific reasons for entitlement to a contract time adjustment
    4.3. The specific provisions of the contract that provide the basis for the requested contract time adjustment
    4.4. A detailed time impact analysis of the project schedule. The time impact analysis shall show the effect of changes or disruptions on the scheduled completion date to demonstrate entitlement to a contract time adjustment.

5. The identification and copies of the Contractor's documents and the substance of oral communications that support the potential claim

• The full and final documentation of the potential claim shall be submitted on Form CEM-6201C furnished by the Department and shall be certified with reference to the California False Claims Act, Government Code Sections 12650-12655.

• Pertinent information, references, arguments, and data to support the potential claim shall be included in the full and final documentation of potential claim. Information submitted

subsequent to the full and final documentation submittal will not be considered. Information required in the full and final documentation of potential claim, as listed in items 1 to 5 above, that is not applicable to the dispute may be exempted as determined by the Engineer. No full and final documentation of potential claim will be considered that does not have the same nature and circumstances, and basis of claim as those specified on the initial and supplemental notices of potential claim.

- The Engineer will evaluate the information presented in the full and final documentation of potential claim and provide a written response to the Contractor within 30 days of its receipt unless otherwise specified. The Engineer's receipt of the full and final documentation of potential claim shall be evidenced by postal receipt or the Engineer's written receipt if delivered by hand. If the full and final documentation of potential claim is submitted by the Contractor after acceptance of the work by the Director, the Engineer need not provide a written response.
- Provisions in this section shall not apply to those claims for overhead costs and administrative disputes that occur after issuance of the proposed final estimate. Administrative disputes are disputes of administrative deductions or withholds, contract item quantities, contract item adjustments, interest payments, protests of contract change orders as provided in Section 4-1.03A, "Procedure and Protest," and protests of the Weekly Statement of Working Days as provided in Section 8-1.06, "Time of Completion." Administrative disputes that occur prior to issuance of the proposed final estimate shall follow applicable requirements of this section. Information listed in the supplemental notice and full and final documentation of potential claim that is not applicable to the administrative dispute may be exempted as determined by the Engineer.
- Unless otherwise specified in the special provisions, the Contractor may pursue the administrative claim process pursuant to Section 9-1.07B, "Final Payment and Claims," for any potential claim found by the Engineer to be without merit.
- Failure of the Contractor to conform to specified dispute procedures shall constitute a failure to pursue diligently and exhaust the administrative procedures in the contract, and is deemed as the Contractor's waiver of the potential claim and a waiver of the right to a corresponding claim for the disputed work in the administrative claim process in conformance with Section 9-1.07B, "Final Payment of Claims," and shall operate as a bar to arbitration pursuant to Section 10240.2 of the California Public Contract Code.

Section 9-1.05, "Stop Notices," of the Standard Specifications is amended to read:

9-1.05 STOP NOTICE WITHHOLDS

- The Department may withhold payments to cover claims filed under Civ Code § 3179 et seq.

Section 9, "Measurement and Payment," of the Standard Specifications is amended by adding the following sections:

Section 9-1.07B, "Final Payment and Claims," of the Standard Specifications is amended to read:

9-1.053 PERFORMANCE FAILURE WITHHOLDS

- During each estimate period you fail to comply with a contract part, including submittal of a document as specified, the Department withholds a part of the progress payment. The

documents include quality control plans, schedules, traffic control plans, and water pollution control submittals.

- For 1 performance failure, the Department withholds 25 percent of the progress payment but does not withhold more than 10 percent of the total bid.
- For multiple performance failures, the Department withholds 100 percent of the progress payment but does not withhold more than 10 percent of the total bid.
- The Department returns performance-failure withholds in the progress payment following the correction of noncompliance.

9-1.055 PENALTY WITHHOLDS

- Penalties include fines and damages that are proposed, assessed, or levied against you or the Department by a governmental agency or citizen lawsuit. Penalties are also payments made or costs incurred in settling alleged permit violations of Federal, State, or local laws, regulations, or requirements. The cost incurred may include the amount spent for mitigation or correcting a violation.
- If you or the Department is assessed a penalty, the Department may withhold the penalty amount until the penalty disposition has been resolved. The Department may withhold penalty funds and notify you within 15 days of the withhold. If the penalty amount is less than the amount being withheld from progress payments for retentions, the Department will not withhold the penalty amount.
- If the penalty is resolved for less than the amount withheld, the Department pays interest at a rate of 6 percent per year on the excess withhold. If the penalty is not resolved, the withhold becomes a deduction.
- Instead of the withhold, you may provide a bond payable to the Department of Transportation equal to the highest estimated liability for any disputed penalties proposed.

9-1.057 PROGRESS WITHHOLDS FOR FEDERAL-AID CONTRACTS

- Section 9-1.057, "Progress Withholds for Federal-Aid Contracts," applies to a Federal-aid contract.
- The Department withholds 10 percent of a partial payment for noncompliant progress. Noncompliant progress occurs when:

1. Total days to date exceed 75 percent of the revised contract working days
2. Percent of working days elapsed exceeds the percent of value of work completed by more than 15 percent

- The Engineer determines the percent of working days elapsed by dividing the total days to date by the revised contract working days and converting the quotient to a percentage.
- The Engineer determines the percent of value of work completed by summing payments made to date and the amount due on the current progress estimate, dividing this sum by the current total estimated value of the work, and converting the quotient to a percentage. These amounts are shown on the Progress Payment Voucher.
- When the percent of working days elapsed minus the percent of value of work completed is less than or equal to 15 percent, the Department returns the withhold in the next progress payment.

The 3rd paragraph of Section 9-1.06, "Partial Payments," of the Standard Specifications is amended to read:

• For a non-Federal-aid project, the Department retains 10 percent of the estimated value of the work done and 10 percent of the value of materials estimated to have been furnished and delivered and unused or furnished and stored as part security for the fulfillment of the contract by the Contractor, except that at any time after 20 percent of the work has been completed, if the Engineer finds that satisfactory progress is being made, the Department may reduce the total amount being retained from payment pursuant to the above requirements to 5 percent of the total estimated value of the work and materials and may also reduce the amount retained from any of the remaining partial payments to 5 percent of the estimated value of the work and materials. In addition, on any partial payment made after 95 percent of the work has been completed, the Department may reduce the amount retained from payment pursuant to the requirements of this Section 9-1.06, to such lesser amount as the Department determines is adequate security for the fulfillment of the balance of the work and other requirements of the contract, but in no event is that amount reduced to less than 125 percent of the estimated value of the work yet to be completed as determined by the Engineer. The reduction is made only upon the request of the Contractor and must be approved in writing by the surety on the performance bond and by the surety on the payment bond. The approval of the surety must be submitted to the Disbursing Officer of the Department; the signature of the person executing the approval for the surety must be properly acknowledged and the power of attorney authorizing the person to give that consent must either accompany the document or be on file with the Department. The retentions specified in this paragraph are those defined in Pub Cont Code § 7107(b).

The 1st sentence of the 4th paragraph of Section 9-1.06, "Partial Payments," of the Standard Specifications is amended to read:

• The Department shall pay monthly to the Contractor, while carrying on the work, the balance not retained, as aforesaid, after deducting therefrom all previous payments and all sums to be deducted or withheld under the provisions of the contract.

The title and 1st and 2nd paragraphs of Section 9-1.065, "Payment of Withheld Funds," of the Standard Specifications are amended to read:

9-1.065 RELEASE OF RETAINED FUNDS

• The Department releases retained funds if you:

1. Request release of the retention (Pub Cont Code § 10263) in writing
2. Deposit securities equivalent to the funds you want released into escrow with the State Treasurer or with a bank acceptable to the Department
3. Are the beneficial owner of and receive interest on the deposited securities substituted for the retained funds

The 2nd sentence Section 9-1.07A, "Payment Prior to Proposed Final Estimate," of the Standard Specifications is amended to read:

• The Department pays the balance due less previous payments, deductions, withholds, and retentions under the provisions of the contract and those further amounts that the Engineer determines to be necessary pending issuance of the proposed final estimate and payment thereon.

Section 9-1.07B, "Final Payment and Claims," of the Standard Specifications is amended to read:

9-1.07B Final Payment and Claims

• After acceptance by the Director, the Engineer makes a proposed final estimate of the total amount payable to the Contractor, including an itemization of the total amount, segregated by contract item quantities, extra work, and other basis for payment, and shows each deduction made or to be made for prior payments and amounts to be deducted, withheld, or retained under the provisions of the contract. Prior estimates and payments are subject to correction in the proposed final estimate. The Contractor must submit written approval of the proposed final estimate or a written statement of claims arising under or by virtue of the contract so that the Engineer receives the written approval or statement of claims no later than close of business of the 30th day after receiving the proposed final estimate. The Contractor's receipt of the proposed final estimate must be evidenced by postal receipt. The Engineer's receipt of the Contractor's written approval or statement of claims must be evidenced by postal receipt or the Engineer's written receipt if delivered by hand.

• On the Contractor's approval, or if the Contractor files no claim within the specified period of 30 days, the Engineer will issue a final estimate in writing in conformance with the proposed final estimate submitted to the Contractor, and within 30 days thereafter the State will pay the entire sum so found to be due. That final estimate and payment thereon shall be conclusive and binding against both parties to the contract on all questions relating to the amount of work done and the compensation payable therefor, except as otherwise provided in Sections 9-1.03C, "Records," and 9-1.09, "Clerical Errors."

• If the Contractor within the specified period of 30 days files claims, the Engineer will issue a semifinal estimate in conformance with the proposed final estimate submitted to the Contractor and within 30 days thereafter the State will pay the sum found to be due. The semifinal estimate and corresponding payment shall be conclusive and binding against both parties to the contract on each question relating to the amount of work done and the compensation payable therefor, except insofar as affected by the claims filed within the time and in the manner required hereunder and except as otherwise provided in Sections 9-1.03C, "Records," and 9-1.09, "Clerical Errors."

• Except for claims for overhead costs and administrative disputes that occur after issuance of the proposed final estimate, the Contractor shall only provide the following two items of information for each claim:

1. The exclusive identification number that corresponds to the supporting full and final documentation of potential claim
2. The final amount of requested additional compensation

• If the final amount of requested additional compensation is different than the amount of requested compensation included in the full and final documentation of potential claim, the Contractor shall provide in the written statement of claims the reasons for the changed amount, the specific provisions of the contract which support the changed amount, and a statement of the reasons the provisions support and provide a basis for the changed amount. If the Contractor's

CONTRACT NO. 04-012024

CONTRACT CHANGE ORDER NO 106

SHEET 27 OF 267

claim fails to provide an exclusive identification number or if there is a disparity in the provided exclusive identification number, the Engineer will notify the Contractor of the omission or disparity. The Contractor shall have 15 days after receiving notification from the Engineer to correct the omission or disparity. If after the 15 days has elapsed, there is still an omission or disparity of the exclusive identification number assigned to the claim, the Engineer will assign the number. No claim will be considered that has any of the following deficiencies:

1. The claim does not have the same nature, circumstances, and basis as the corresponding full and final documentation of potential claim.
2. The claim does not have a corresponding full and final documentation of potential claim.
3. The claim was not included in the written statement of claims.
4. The Contractor did not comply with applicable notice or protest requirements of Sections 4-1.03, "Changes," 5-1.116, "Differing Site Condition," 8-1.06, "Time of Completion," 8-1.07, "Liquidated Damages," 8-1.10, "Utility and Non-Highway Facilities," and 9-1.04, "Notice of Potential Claim."

• Administrative disputes that occur after issuance of the proposed final estimate shall be included in the Contractor's written statement of claims in sufficient detail to enable the Engineer to ascertain the basis and amounts of those claims.

• The Contractor shall keep full and complete records of the costs and additional time incurred for work for which a claim for additional compensation is made. The Engineer or designated claim investigators or auditors shall have access to those records and any other records as may be required by the Engineer to determine the facts or contentions involved in the claims. Failure to permit access to those records shall be sufficient cause for denying the claims.

CONTRACT NO. 04-012084

CONTRACT CHANGE ORDER NO 108

SHEET 28 OF 267

• The written statement of claims submitted by the Contractor shall be accompanied by a notarized certificate containing the following language:

> Under the penalty of law for perjury or falsification and with specific reference to the California False Claims Act, Government Code Section 12650 et. seq., the undersigned,
>
> _____ .
> *(name)*
> _____ *of*
> *(title)*
> _____ .
> *(company)*
>
> hereby certifies that the claim for the additional compensation and time, if any, made herein for the work on this contract is a true statement of the actual costs incurred and time sought, and is fully documented and supported under the contract between parties.
>
> Dated _____
>
> /s/ _____
>
> Subscribed and sworn before me this _____ day
>
> of _____ .
>
> _____
> *(Notary Public)*
> My Commission
> Expires _____

• Failure to submit the notarized certificate will be sufficient cause for denying the claim.

• Any claim for overhead, in addition to being certified as stated above, shall be supported and accompanied by an audit report of an independent Certified Public Accountant. Omission of a supporting audit report of an independent Certified Public Accountant shall result in denial of the claim and shall operate as a bar to arbitration, as to the claim, in conformance with the requirements in Section 10240.2 of the California Public Contract Code. Any claim for overhead shall be subject to audit by the State at its discretion. The costs of performing an audit examination and submitting the report shall be borne by the Contractor. The Department will deduct an offset amount for field and home office overhead paid on all added work from any claim for overhead as appropriate, as determined by the Department. The value of the added work equals the value of the work completed minus the total bid. The home office overhead offset equals 5 percent of the added work. The field office overhead offset equals 5-1/2 percent of the added work. The Certified Public Accountant's audit examination shall be performed in conformance with the requirements of the American Institute of Certified Public Accountants Attestation Standards. The audit examination and report shall depict the Contractor's project and company-wide financial records and shall specify the actual overall average daily rates for both field and home office overhead for the entire duration of the project, and whether the costs have been properly allocated. The rates of field and home office overhead shall exclude unallowable costs as determined in Title 48 of the Federal Acquisition Regulations, Chapter 1, Part 31. The audit examination and report shall determine if the rates of field and home office overhead are:

1. Allowable in conformance with the requirements in Title 48 of the Federal Acquisition Regulations, Chapter 1, Part 31.

2. Adequately supported by reliable documentation.
3. Related solely to the project under examination.

• Costs or expenses incurred by the State in reviewing or auditing claims that are not supported by the Contractor's cost accounting or other records shall be deemed to be damages incurred by the State within the meaning of the California False Claims Act.

• If the Engineer determines that a claim requires additional analysis, the Engineer will schedule a board of review meeting. The Contractor shall meet with the review board or person and make a presentation in support of the claim. Attendance by the Contractor at the board of review meeting shall be mandatory.

• The District Director of the District that administered the contract will make the final determination of any claims which remain in dispute after completion of claim review by the Engineer or board of review meeting.

The final determination of claims will be sent to the Contractor by hand delivery or deposit in the U.S. mail. The Engineer will then make and issue the Engineer's final estimate in writing and within 30 days thereafter the State will pay the entire sum, if any, found due thereon. That final estimate shall be conclusive and binding against both parties to the contract on all questions relating to the amount of work done and the compensation payable therefor, except as otherwise provided in Sections 9-1.03C, "Records," and 9-1.09, "Clerical Errors."

• Failure of the Contractor to conform to the specified dispute procedures shall constitute a failure to pursue diligently and exhaust the administrative procedures in the contract and shall operate as a bar to arbitration in conformance with the requirements in Section 10240.2 of the California Public Contract Code.

SECTION 12: CONSTRUCTION AREA TRAFFIC CONTROL DEVICES

Issue Date: October 6, 2006

The second paragraph of Section 12-1.01, "Description," of the Standard Specifications is amended to read:

• Attention is directed to Part 6 of the California MUTCD. Nothing in this Section 12 is to be construed as to reduce the minimum standards in these manuals.

Section 12-2.01, "Flaggers," of the Standard Specifications is amended to read:

• Flaggers while on duty and assigned to traffic control or to give warning to the public that the highway is under construction and of any dangerous conditions to be encountered as a result thereof, shall perform their duties and shall be provided with the necessary equipment in conformance with Part 6 of the California MUTCD. The equipment shall be furnished and kept clean and in good repair by the Contractor at the Contractor's expense.

The first paragraph of Section 12-3.01, "General," of the Standard Specifications is amended to read:

• In addition to the requirements in Part 6 of the California MUTCD, all devices used by the Contractor in the performance of the work shall conform to the provisions in this Section 12-3.

The fifth paragraph of Section 12-3.01, "General," of the Standard Specifications is amended to read:

• Retroreflective sheeting shall conform to the requirements in ASTM Designation: D 4956 and to the special provisions.

The first paragraph of Section 12-3.06, "Construction Area Signs," of the Standard Specifications is amended to read:

• The term "Construction Area Signs" shall include all temporary signs required for the direction of public traffic through or around the work during construction. Construction area signs are shown in or referred to in Part 6 of the California MUTCD.

The fourth paragraph of Section 12-3.06, "Construction Area Signs," of the Standard Specifications is amended to read:

• All construction area signs shall conform to the dimensions, color and legend requirements of the plans, Part 6 of the California MUTCD and these specifications. All sign panels shall be the product of a commercial sign manufacturer, and shall be as specified in these specifications.

The eighth paragraph of Section 12-3.06, "Construction Area Signs," of the Standard Specifications is amended to read:

• Used signs with the specified sheeting material will be considered satisfactory if they conform to the requirements for visibility and legibility and the colors conform to the requirements in Part 6 of the California MUTCD. A significant difference between day and nighttime retroreflective color will be grounds for rejecting signs.

Section 12-3.06A, "Stationary Mounted Signs," of the Standard Specifications is amended by deleting the third, fourth, fifth, and sixth paragraphs.

SECTION 15: EXISTING HIGHWAY FACILITIES

Issue Date: November 2, 2004

The sixth paragraph of Section 15-2.07, "Payment," of the Standard Specifications is amended to read:

• Full compensation for removing, salvaging, reconstructing, relocating or resetting end caps, return caps, terminal sections, and buried post anchors, for metal beam guard railings and thrie beam barriers, and for connecting reconstructed, relocated or reset railings and barriers to new and existing facilities, including connections to concrete, shall be considered as included in the contract price paid per meter for the type of railing or barrier work involved and no additional compensation will be allowed therefor.

SECTION 19: EARTHWORK

Issue Date: January 5, 2007

The third paragraph of Section 19-1.02, "Preservation of Property," of the Standard Specifications is amended to read:

• In addition to the provisions in Sections 5-1.02, "Plans and Working Drawings," and 5-1.02A, "Excavation Safety Plans," detailed plans of the protective systems for excavations on or affecting railroad property will be reviewed for adequacy of protection provided for railroad facilities, property, and traffic. These plans shall be submitted at least 9 weeks before the Contractor intends to begin excavation requiring the protective systems. Approval by the Engineer of the detailed plans for the protective systems will be contingent upon the plans being satisfactory to the railroad company involved.

The first paragraph of Section 19-3.025C, "Soil Cement Bedding," of the Standard Specifications is amended to read:

• Cementitious material used in soil cement bedding shall conform to the provisions in Section 90-2.01, "Cementitious Materials." Supplementary cementitious material will not be required.

The fourth paragraph of Section 19-3.025C, "Soil Cement Bedding," of the Standard Specifications is amended to read:

• The aggregate, cementitious material, and water shall be proportioned either by mass or by volume. Soil cement bedding shall contain not less than 175 kg of cementitious material per cubic meter. The water content shall be sufficient to produce a fluid, workable mix that will flow and can be pumped without segregation of the aggregate while being placed.

The first paragraph of Section 19-3.062, "Slurry Cement Backfill," of the Standard Specifications is amended to read:

• Slurry cement backfill shall consist of a fluid, workable mixture of aggregate, cementitious material, and water.

The fifth paragraph of Section 19-3.062, "Slurry Cement Backfill," of the Standard Specifications is amended to read:

• Cementitious material shall conform to the provisions in Section 90-2.01, "Cementitious Materials." Supplementary cementitious material will not be required.

The eighth paragraph of Section 19-3.062, "Slurry Cement Backfill," of the Standard Specifications is amended to read:

• The aggregate, cementitious material, and water shall be proportioned either by mass or by volume. Slurry cement backfill shall contain not less than 110 kg of cementitious material per

CONTRACT NO. 04-012024

CONTRACT CHANGE ORDER NO 108

SHEET 32 OF 267

cubic meter. The water content shall be sufficient to produce a fluid, workable mix that will flow and can be pumped without segregation of the aggregate while being placed.

SECTION 20: EROSION CONTROL AND HIGHWAY PLANTING

Issue Date: August 17, 2007

Section 20-2.03, "Soil Amendment," of the Standard Specifications is amended to read:

20-2.03 SOIL AMENDMENT

• Soil amendment shall comply with the requirements in the California Food and Agricultural Code.

• Soil amendment producers shall comply with the following:

1. Be fully permitted to produce compost as specified under the California Integrated Waste Management Board, Local Enforcement Agencies and any other State and Local Agencies that regulate Solid Waste Facilities. If exempt from State permitting requirements, the composting facility must certify that it follows guidelines and procedures for production of compost meeting the environmental health standards of Title 14, California Code of Regulations, Division 7, Chapter 3.1, Article 7.
2. Be a participant in United States Composting Council's Seal of Testing Assurance program.

• Soil amendment shall be composted and may be derived from any single, or mixture of any of the following feedstock materials:

1. Green material consisting of chipped, shredded, or ground vegetation; or clean processed recycled wood products
2. Biosolids
3. Manure
4. Mixed food waste

• Soil amendment feedstock materials shall be composted to reduce weed seeds, pathogens and deleterious materials as specified under Title 14, California Code of Regulations, Division 7, Chapter 3.1, Article 7, Section 17868.3.

• Soil amendment shall not be derived from mixed municipal solid waste and must be reasonably free of visible contaminates. Soil amendment must not contain paint, petroleum products, pesticides or any other chemical residues harmful to animal life or plant growth. Soil amendment must not possess objectionable odors.

• Metal concentrations in soil amendment must not exceed the maximum metal concentrations listed in Title 14, California Code of Regulations, Division 7, Chapter 3.1, Section 17868.2.

• Soil amendment must comply with the following:

Physical/Chemical Requirements

Property	Test Method	Requirement
pH	*TMECC 04.11-A, Elastometric pH 1:5 Slurry Method, pH Units	6.0–8.0
Soluble Salts	TMECC 04.10-A, Electrical Conductivity 1:5 Slurry Method dS/m (mmhos/cm)	0-10.0
Moisture Content	TMECC 03.09-A, Total Solids & Moisture at 70+/- 5 deg C, % Wet Weight Basis	30–60
Organic Matter Content	TMECC 05.07-A, Loss-On-Ignition Organic Matter Method (LOI), % Dry Weight Basis	30–65
Maturity	TMECC 05.05-A, Germination and Vigor Seed Emergence Seedling Vigor % Relative to Positive Control	 80 or Above 80 or Above
Stability	TMECC 05.08-B, Carbon Dioxide Evolution Rate mg CO_2-C/g OM per day	8 or below
Particle Size	TMECC 02.02-B Sample Sieving for Aggregate Size Classification % Dry Weight Basis	95% Passing 5/8 inch 70% Passing 3/8 inch
Pathogen	TMECC 07.01-B, Fecal Coliform Bacteria < 1000 MPN/gram dry wt.	Pass
Pathogen	TMECC 07.01-B, Salmonella < 3 MPN/4 grams dry wt.	Pass
Physical Contaminants	TMECC 02.02-C, Man Made Inert Removal and Classification: Plastic, Glass and Metal, % > 4mm fraction	Combined Total: < 1.0
Physical Contaminants	TMECC 02.02-C, Man Made Inert Removal and Classification: Sharps (Sewing needles, straight pins and hypodermic needles), % > 4mm fraction	None Detected

*TMECC refers to "Test Methods for the Examination of Composting and Compost," published by the United States Department of Agriculture and the United States Compost Council (USCC).

• Prior to application, the Contractor shall provide the Engineer with a copy of the soil amendment producer's Compost Technical Data Sheet and a copy of the compost producers STA certification. The Compost Technical Data Sheet shall include laboratory analytical test results, directions for product use, and a list of product ingredients.

• Prior to application, the Contractor shall provide the Engineer with a Certificate of Compliance in conformance with the provisions in Section 6-1.07, "Certificates of Compliance," of the Standard Specifications.

The last 3 paragraphs of Section 20-2.10, "Seed," of the Standard Specifications are deleted.

Section 20-2.25, "Backflow Preventers," of the Standard Specifications is amended to read:

20-2.25 BACKFLOW PREVENTERS

• Backflow preventers shall be one of the reduced pressure principle devices as specified in these specifications and the special provisions.

• Backflow preventers shall be factory assembled and shall include 2 check valves, one pressure differential relief valve, 2 shut-off valves and 4 test cocks. Backflow preventer and valves shall be the same size as the pipeline in which they are installed, unless otherwise shown on the plans.

CONTRACT NO. 04-012024

CONTRACT CHANGE ORDER NO 1086

SHEET 34 OF 267

• Backflow preventer shut-off valves shall be manufactured from iron or bronze and shall be either resilient wedged gate valves, resilient seated and fully ported ball valves, or resilient seated butterfly valves. Threaded type shut-off valves shall be provided with a union on one side of each valve. Unions shall be brass or malleable iron.

The last paragraph of Section 20-3.04A, "General," of the Standard Specifications is deleted.

Section 20-4.055, "Pruning," of the Standard Specifications is amended to read:

20-4.055 PRUNING

• Pruning of plants shall be consistent with American National Standards Institute (ANSI), "Tree, Shrub and Other Woody Plant Maintenance Standard Practices," ANSI 300 (Part 1)-2001 and "Best Management Practices Tree Pruning," 2002 (ISBN 1-881956318), published by the International Society of Arboriculture, P.O. Boc 3129, Champaign, IL 61826.

Section 20-5.03J, "Check and Test Backflow Preventers," of the Standard Specifications is amended to read:

20-5.03J Check and Test Backflow Preventers

• Backflow preventers shall be checked and tested for proper operation by a certified Backflow Preventer Tester. The tester shall hold a valid certification as a Backflow Preventer Tester from the local governing authority in which the device to be tested is located. The local governing authority shall be the county, city or water purveyor having the governing authority over testing of backflow preventers involved. If the local governing authority does not have a certification program for Backflow Preventer Testers, the tester shall have a certificate from one of the following:

A. The American Water Works Association.
B. A county which has a certification program for Backflow Preventer Testers.

• Tests for proper operation shall conform to the requirements of the governing authority.
• The Engineer shall be notified at least 5 days prior to testing backflow preventers.
• One copy of the test results for each backflow preventer tested shall be furnished to the Engineer.
• Backflow preventers, installed by the Contractor, failing required tests shall be repaired at the Contractor's expense.

SECTION 25: AGGREGATE SUBBASES

Issue Date: February 16, 2007

The first paragraph of Section 25-1.02A, "Class 1, Class 2, and Class 3 Aggregate Subbases," of the Standard Specifications is amended to read:

• Aggregate must be clean and free from organic matter and other deleterious substances. Aggregate must consist of any combination of:

1. Broken stone
2. Crushed gravel
3. Natural rough surfaced gravel
4. Sand
5. Up to 100 percent of any combination of processed:

    5.1. Asphalt concrete
    5.2. Portland cement concrete
    5.3. Lean concrete base
    5.4. Cement treated base

The first paragraph of Section 25-1.02B, "Class 4 Aggregate Subbase," of the Standard Specifications is amended to read:

• Aggregate must be clean and free from organic matter and other deleterious substances. Aggregate must consist of any combination of:

1. Broken stone
2. Crushed gravel
3. Natural rough surfaced gravel
4. Sand
5. Up to 100 percent of any combination of processed:

    5.1. Asphalt concrete
    5.2. Portland cement concrete
    5.3. Lean concrete base
    5.4. Cement treated base

SECTION 26: AGGREGATE BASE

Issue Date: February 16, 2007

The first paragraph of Section 26-1.02A, "Class 2 Aggregate Base," of the Standard Specifications is amended to read:

• Aggregate must be clean and free from organic matter and other deleterious substances. Aggregate must consist of any combination of:

1. Broken stone
2. Crushed gravel
3. Natural rough surfaced gravel
4. Sand
5. Up to 100 percent of any combination of processed:

    5.1. Asphalt concrete
    5.2. Portland cement concrete
    5.3. Lean concrete base
    5.4. Cement treated base

The first paragraph of Section 26-1.02B, "Class 3 Aggregate Base," of the Standard Specifications is amended to read:

• Aggregate must be clean and free from organic matter and other deleterious substances. Aggregate must consist of any combination of:

1. Broken stone
2. Crushed gravel
3. Natural rough surfaced gravel
4. Sand
5. Up to 100 percent of any combination of processed:

    5.1. Asphalt concrete
    5.2. Portland cement concrete
    5.3. Lean concrete base
    5.4. Cement treated base

SECTION 27: CEMENT TREATED BASES

Issue Date: January 5, 2007

The first paragraph of Section 27-1.02, "Materials," of the Standard Specifications is amended to read:

• Cement shall be Type II portland cement conforming to the provisions in Section 90-2.01A, "Cement."

The third paragraph of Section 27-1.02, "Materials," of the Standard Specifications is amended to read:

• Aggregate for use in Class A cement treated base shall be of such quality that when mixed with cement in an amount not to exceed 5 percent by mass of the dry aggregate and compacted at optimum moisture content, the compressive strength of a sample of the compacted mixture shall not be less than 5.2 MPa at 7 days, when tested by California Test 312.

The fourth paragraph of Section 27-1.02, "Materials," of the Standard Specifications is amended to read:

• Aggregate for use in Class B cement treated base shall have a Resistance (R-value) of not less than 60 before mixing with cement and a Resistance (R-value) of not less than 80 after mixing with cement in an amount not to exceed 2.5 percent by mass of the dry aggregate.

SECTION 28: LEAN CONCRETE BASE

Issue Date: January 5, 2007

The first paragraph of Section 28-1.02, "Materials," of the Standard Specifications is amended to read:

• Cement shall be Type II portland cement conforming to the provisions in Section 90-2.01A, "Cement."

The sixth paragraph of Section 28-1.02, "Materials," of the Standard Specifications is amended to read:

• Aggregate shall be of such quality that, when mixed with cement in an amount not to exceed 180 kg per cubic meter, and tested in conformance with the requirements in California Test 548, the compressive strength of a sample will be not less than 5.0 MPa at 7 days.

SECTION 29: TREATED PERMEABLE BASES

Issue Date: January 5, 2007

The fourth paragraph of Section 29-1.02A, "Asphalt Treated Permeable Base," of the Standard Specifications is amended to read:

• The type and grade of asphalt binder to be mixed with aggregate will be specified in the special provisions.

The second paragraph of Section 29-1.02B, "Cement Treated Permeable Base," of the Standard Specifications is amended to read:

• Cement shall be Type II portland cement conforming to the provisions in Section 90-2.01A, "Cement."

The second paragraph of Section 29-1.04B, "Cement Treated Permeable Base," of the Standard Specifications is amended to read:

• Cement treated permeable base shall contain not less than 170 kg of cement per cubic meter.

SECTION 37: BITUMINOUS SEALS

Issue Date: August 17, 2007

The fourth through sixth paragraphs in Section 37-1.03, "Maintaining Traffic," of the Standard Specifications are amended to read:

• On 2-lane two-way roadways, W8-7 "LOOSE GRAVEL" signs and W13-1 (35) speed advisory signs shall be furnished and placed adjacent to both sides of the traveled way where screenings are being spread on a traffic lane. The first W8-7 sign in each direction shall be placed where traffic first encounters loose screenings, regardless of which lane the screenings are being spread on. The W13-1 (35) signs need not be placed in those areas with posted speed

limits of less than 40 MPH. The signs shall be placed at maximum 600-m intervals along each side of the traveled way and at public roads or streets entering the seal coat area as directed by the Engineer.

• On multilane roadways (freeways, expressways and multilane conventional highways) where screenings are being spread on a traffic lane, W8-7 "LOOSE GRAVEL" signs and W13-1 (35) speed advisory signs shall be furnished and placed adjacent to the outside edge of the traveled way nearest to the lane being worked on. The first W8-7 sign shall be placed where the screenings begin with respect to the direction of travel on that lane. The W13-1 (35) signs need not be placed in those areas with posted speed limits of less than 40 MPH. The signs shall be placed at maximum 600-m intervals along the edge of traveled way and at on-ramps, public roads or streets entering the seal coat area as directed by the Engineer.

• The W8-7 and W13-1 signs shall be maintained in place at each location until final brooming of the seal coat surface at that location is completed. The W8-7 and W13-1 signs shall conform to the provisions for construction area signs in Section 12, "Construction Area Traffic Control Devices." The signs may be set on temporary portable supports with the W13-1 below the W8-7 or on barricades with the W13-1 sign alternating with the W8-7 sign.

The second paragraph in Section 37-1.09, "Payment," of the Standard Specifications is amended to read:

• The above prices and payments shall include full compensation for furnishing all labor, materials, tools, equipment and incidentals, and for doing all the work involved in applying seal coat, complete in place, including furnishing, placing, maintaining, and removing W8-7 and W13-1 signs, when required, and temporary supports or barricades for the signs, as shown on the plans, and as specified in these specifications and the special provisions, and as directed by the Engineer.

SECTION 39: ASPHALT CONCRETE

Issue Date: November 18, 2005

The fifth paragraph of Section 39-2.01, "Asphalts," of the Standard Specifications is amended to read:

• Paving asphalt to be used as a binder for pavement reinforcing fabric shall be a steam-refined paving asphalt conforming to the provisions in Section 92, "Asphalts," and shall be Grade PG 70-10.

SECTION 40: PORTLAND CEMENT CONCRETE PAVEMENT

Issue Date: January 5, 2007

Section 40-1.015, "Cement Content," is deleted.

Section 40-1.05, "Proportioning," of the Standard Specifications is amended to read:

• Aggregate and cementitious material proportioning shall conform to the provisions in Section 90-5, "Proportioning."

The first paragraph in Section 40-1.105, "Exit Ramp Termini," of the Standard Specifications is amended to read:

• Concrete pavement shall be constructed at the ends of exit ramps when required by the plans or the special provisions. Texturing for exit ramp termini shall be by means of heavy brooming in a direction normal to ramp centerline. The hardened surface shall have a coefficient of friction not less than 0.35 as determined by California Test 342. Minimum cementitious material content of concrete in pavement for exit ramp termini shall be 350 kg/m^3.

The fourth paragraph of Section 40-1.08, "Joints," of the Standard Specifications is amended to read:

• Straight tie bars shall be deformed reinforcing steel bars conforming to the requirements in ASTM Designation: A 615/A 615M, Grade 280 or 420; ASTM Designation: A 996/A 996M, Grade 350 or 420; or ASTM Designation: A 706/A 706M.

The first paragraph in Section 40-1.14, "Payment," of the Standard Specifications is amended to read:

• The contract price paid per cubic meter for concrete pavement shall include full compensation for furnishing all labor, materials (including cementitious material in the amount specified), tools, equipment, and incidentals, and for doing all the work involved in constructing the portland cement concrete pavement, complete in place, as shown on the plans, and as specified in these specifications and the special provisions, and as directed by the Engineer.

SECTION 41: PAVEMENT SUBSEALING AND JACKING

Issue Date: January 5, 2007

The second paragraph of Section 41-1.02, "Materials," of the Standard Specifications is amended to read:

• Cement for grout shall be Type II portland cement conforming to the provisions in Section 90-2.01A, "Cement."

The third paragraph of Section 41-1.02, "Materials," of the Standard Specifications is amended to read:

• Fly ash shall conform to the requirements in AASHTO Designation: M 295 for either Class C or for Class F. The brand of fly ash used in the work shall conform to the provisions for approval of admixture brands in Section 90-4.03, "Admixture Approval."

The fifth paragraph of Section 41-1.02, "Materials," of the Standard Specifications is amended to read:

CONTRACT NO. 04-012024

CONTRACT CHANGE ORDER NO 108

SHEET 40 OF 267

• Chemical admixtures and calcium chloride may be used. Chemical admixtures in the grout mix shall conform to the provisions in Section 90-4, "Admixtures." Calcium chloride shall conform to ASTM Designation: D 98.

SECTION 42: GROOVE AND GRIND PAVEMENT

Issue Date: December 31, 2001

The last sentence of the first subparagraph of the third paragraph in Section 42-2.02, "Construction," of the Standard Specifications is amended to read:

• After grinding has been completed, the pavement shall conform to the straightedge and profile requirements specified in Section 40-1.10, "Final Finishing."

SECTION 49: PILING

Issue Date: January 5, 2007

The first paragraph in Section 49-1.03, "Determination of Length," of the Standard Specifications is amended to read:

• Foundation piles of any material shall be of such length as is required to obtain the specified penetration, and to extend into the cap or footing block as shown on the plans, or specified in the special provisions.

The fourth paragraph in Section 49-1.03, "Determination of Length," of the Standard Specifications is amended to read:

• Modification to the specified installation methods and specified pile tip elevation will not be considered at locations where tension or lateral load demands control design pile tip elevations or when the plans state that specified pile tip elevation shall not be revised.

The sixth and seventh paragraphs in Section 49-1.03, "Determination of Length," of the Standard Specifications are amended to read:

• Indicator compression pile load testing shall conform to the requirements in ASTM Designation: D 1143-81. The pile shall sustain the first compression test load applied which is equal to the nominal resistance in compression, as shown on the plans, with no more than 13 mm total vertical movement at the top of the pile measured relative to the top of the pile prior to the start of compression load testing.

• Indicator tension pile load testing shall conform to the requirements in ASTM Designation: D 3689-90. The loading apparatus described as "Load Applied to Pile by Hydraulic Jack(s) Acting at One End of Test Beam(s) Anchored to the Pile" shall not be used. The pile shall sustain the first tension test load applied which is equal to the nominal resistance in tension, as shown on the plans, with no more than 13 mm total vertical movement at the top of the pile measured relative to the top of the pile prior to the start of tension load testing.

The ninth paragraph in Section 49-1.03, "Determination of Length," of the Standard Specifications is amended to read:

• For driven piling, the Contractor shall furnish piling of sufficient length to obtain the specified tip elevation shown on the plans or specified in the special provisions. For cast-in-drilled-hole concrete piling, the Contractor shall construct piling of such length to develop the nominal resistance in compression and to obtain the specified tip elevation shown on the plans or specified in the special provisions.

The tenth paragraph in Section 49-1.03, "Determination of Length," of the Standard Specifications is deleted.

The fourth paragraph in Section 49-1.04, "Load Test Piles," of the Standard Specifications is amended to read:

• Load test piles and anchor piles which are not to be incorporated in the completed structure shall be removed in conformance with the provisions in Section 15-4.02, "Removal Methods," and the remaining holes shall be backfilled with earth or other suitable material approved by the Engineer.

The fifth paragraph in Section 49-1.04, "Load Test Piles," of the Standard Specifications is amended to read:

• Load test anchorages in piles used as anchor piles shall conform to the following requirements:

A. High strength threaded steel rods shall conform to the provisions for bars in Section 50-1.05, "Prestressing Steel," except Type II bars shall be used.
B. High strength steel plates shall conform to the requirements in ASTM Designation: A 709/A 709M, Grade 345.
C. Anchor nuts shall conform to the provisions in the second paragraph in Section 50-1.06, "Anchorages and Distribution."

The sixth paragraph in Section 49-1.04, "Load Test Piles," of the Standard Specifications is amended to read:

• The Contractor may use additional cementitious material in the concrete for the load test and anchor piles.

The first paragraph in Section 49-1.05, "Driving Equipment," of the Standard Specifications is amended to read:

• Driven piles shall be installed with impact hammers that are approved in writing by the Engineer. Impact hammers shall be steam, hydraulic, air or diesel hammers. Impact hammers shall develop sufficient energy to drive the piles at a penetration rate of not less than 3 mm per blow at the specified nominal resistance.

The seventh paragraph in Section 49-1.05, "Driving Equipment," of the Standard Specifications is amended to read:

• When necessary to obtain the specified penetration and when authorized by the Engineer, the Contractor may supply and operate one or more water jets and pumps, or furnish the necessary drilling apparatus and drill holes not greater than the least dimension of the pile to the proper depth and drive the piles therein. Jets shall not be used at locations where the stability of embankments or other improvements would be endangered. In addition, for steel piles, steel shells, or steel casings, when necessary to obtain the specified penetration or to prevent damage to the pile during installation, the Contractor shall provide special driving tips or heavier pile sections or take other measures as approved by the Engineer.

• The use of followers or underwater hammers for driving piles will be permitted if authorized in writing by the Engineer. When a follower or underwater hammer is used, its efficiency shall be verified by furnishing the first pile in each bent or footing sufficiently long and driving the pile without the use of a follower or underwater hammer.

The second paragraph in Section 49-1.07, "Driving," of the Standard Specifications is amended to read:

• Timber piles shall be fresh-headed and square and when permitted by the Engineer, the heads of the piles may be protected by means of heavy steel or wrought iron rings. During driving operations timber piling shall be restrained from lateral movement at intervals not to exceed 6 m over the length between the driving head and the ground surface. During driving operations, the timber pile shall be kept moving by continuous operation of the hammer. When the blow count exceeds either 2 times the blow count required in 300 mm, or 3 times the blow count required in 75 mm for the nominal resistance as shown on the plans, computed in conformance with the provisions in Section 49-1.08, "Pile Driving Acceptance Criteria," additional aids shall be used to obtain the specified penetration. These aids may include the use of water jets or drilling, where permitted, or the use of a larger hammer employing a heavy ram striking with a low velocity.

Section 49-1.08, "Bearing Value and Penetration," of the Standard Specifications is amended to read:

49-1.08 PILE DRIVING ACCEPTANCE CRITERIA

• Except for piles to be load tested, driven piles shall be driven to a value of not less than the nominal resistance shown on the plans unless otherwise specified in the special provisions or permitted in writing by the Engineer. In addition, when a pile tip elevation is specified, driven piles shall penetrate at least to the specified tip elevation, unless otherwise permitted in writing by the Engineer. Piles to be load tested shall be driven to the specified tip elevation.

• When the pile nominal resistance is omitted from the plans or the special provisions, timber piles shall be driven to a nominal resistance of 800 kN, and steel and concrete piles shall be driven to a nominal resistance of 1250 kN.

• The nominal resistance for driven piles shall be determined from the following formula in which "R_u" is the nominal resistance in kilonewtons, "E_r" is the manufacturer's rating for joules

of energy developed by the hammer at the observed field drop height, and "N" is the number of hammer blows in the last 300 millimeters. (maximum value to be used for N is 100):

$R_u = (7 * (E_r)^{1/2} * \log_{10} (0.83 * N)) - 550$

The first paragraph in Section 49-2.03, "Requirements," of the Standard Specifications is amended to read:

• When preservative treatment of timber piles is required by the plans or specified in the special provisions, the treatment shall conform to the provisions in Section 58, "Preservative Treatment of Lumber, Timber and Piling," and the applicable AWPA Use Category.

The first paragraph in Section 49-2.04, "Treatment of Pile Heads," of the Standard Specifications is amended to read:

A. An application of wood preservative conforming to the provisions in Section 58-1.04, "Wood Preservative for Manual Treatment," shall first be applied to the head of the pile and a protective cap shall then be built up by applying alternate layers of loosely woven fabric and hot asphalt or tar similar to membrane waterproofing, using 3 layers of asphalt or tar and 2 layers of fabric. The fabric shall measure at least 150 mm more in each direction than the diameter of the pile and shall be turned down over the pile and the edges secured by binding with 2 turns of No. 10 galvanized wire. The fabric shall be wired in advance of the application of the final layer of asphalt or tar, which shall extend down over the wiring.
B. The sawed surface shall be covered with 3 applications of a hot mixture of 60 percent creosote and 40 percent roofing pitch, or thoroughly brushcoated with 3 applications of hot creosote and covered with hot roofing pitch. A covering of 3.50-mm nominal thickness galvanized steel sheet shall be placed over the coating and bent down over the sides of each pile to shed water.

Section 49-3.01, "Description," of the Standard Specifications is amended by deleting the fifth paragraph.

The sixth and seventh paragraphs in Section 49-3.01, "Description," of the Standard Specifications are amended to read:

• Except for precast prestressed concrete piles in a corrosive environment, lifting anchors used in precast prestressed concrete piles shall be removed, and the holes filled in conformance with the provisions in Section 51-1.18A, "Ordinary Surface Finish."
• Lifting anchors used in precast prestressed concrete piles in a corrosive environment shall be removed to a depth of at least 25 mm below the surface of the concrete, and the resulting hole shall be filled with epoxy adhesive before the piles are delivered to the job site. The epoxy adhesive shall conform to the provisions in Sections 95-1, "General," and 95-2.01, "Binder (Adhesive), Epoxy Resin Base (State Specification 8040-03)."

The first and second paragraphs in Section 49-4.01, "Description," of the Standard Specifications are amended to read:

- Cast-in-place concrete piles shall consist of one of the following:

  A. Steel shells driven permanently to the required nominal resistance and penetration and filled with concrete.
  B. Steel casings installed permanently to the required penetration and filled with concrete.
  C. Drilled holes filled with concrete.
  D. Rock sockets filled with concrete.

- The drilling of holes shall conform to the provisions in these specifications. Concrete filling for cast-in-place concrete piles is designated by compressive strength and shall have a minimum 28-day compressive strength of 25 MPa. At the option of the Contractor, the combined aggregate grading for the concrete shall be either the 25-mm maximum grading, the 12.5-mm maximum grading, or the 9.5-mm maximum grading. Concrete shall conform to the provisions in Section 90, "Portland Cement Concrete," and Section 51, "Concrete Structures." Reinforcement shall conform to the provisions in Section 52, "Reinforcement."

The fourth paragraph in Section 49-4.03, "Drilled Holes," of the Standard Specifications is amended to read:

- After placing reinforcement and prior to placing concrete in the drilled hole, if caving occurs or deteriorated foundation material accumulates on the bottom of the hole, the bottom of the drilled hole shall be cleaned. The Contractor shall verify that the bottom of the drilled hole is clean.

The first and second paragraphs in Section 49-4.04, "Steel Shells," of the Standard Specifications are amended to read:

- Steel shells shall be sufficiently watertight to exclude water during the placing of concrete. The shells may be cylindrical or tapered, step-tapered, or a combination of either, with cylindrical sections.

The first paragraph in Section 49-4.05, "Inspection," of the Standard Specifications is amended to read:

- After being driven and prior to placing reinforcement and concrete therein, the steel shells shall be examined for collapse or reduced diameter at any point. Any shell which is improperly driven or broken or shows partial collapse to such an extent as to materially decrease its nominal resistance will be rejected. Rejected shells shall be removed and replaced, or a new shell shall be driven adjacent to the rejected shell. Rejected shells which cannot be removed shall be filled with concrete by the Contractor at the Contractor's expense. When a new shell is driven to replace a rejected shell, the Contractor, at the Contractor's expense, shall enlarge the footing as determined necessary by the Engineer.

The third paragraph in Section 49-5.01, "Description," of the Standard Specifications is amended to read:

- Steel pipe piles shall conform to the following requirements:

1. Steel pipe piles less than 360 mm in diameter shall conform to the requirements in ASTM Designation: A 252, Grade 2 or 3.
2. Steel pipe piles 360 mm and greater in diameter shall conform to the requirements in ASTM Designation: A 252, Grade 3.
3. Steel pipe piles shall be of the nominal diameter and nominal wall thickness shown on the plans or specified in the special provisions.
4. The carbon equivalency (CE) of steel for steel pipe piles, as defined in AWS D 1.1, Section XI5.1, shall not exceed 0.45.
5. The sulfur content of steel for steel pipe piles shall not exceed 0.05-percent.
6. Seams in steel pipe piles shall be complete penetration welds.

The first paragraph in Section 49-6.01, "Measurement," of the Standard Specifications is amended to read:

• The length of timber, steel, and precast prestressed concrete piles, and of cast-in-place concrete piles consisting of driven shells filled with concrete, shall be the greater of the following:

A. The total length in place in the completed work, measured along the longest side, from the tip of the pile to the plane of pile cut-off.
B. The length measured along the longest side, from the tip elevation shown on the plans or the tip elevation ordered by the Engineer, to the plane of pile cut-off.

The third paragraph in Section 49-6.02, "Payment," of the Standard Specifications is amended to read:

• The contract price paid per meter for cast-in-drilled-hole concrete piling shall include full compensation for furnishing all labor, materials, tools, equipment, and incidentals, and for doing all work involved in drilling holes, disposing of material resulting from drilling holes, temporarily casing holes and removing water when necessary, furnishing and placing concrete and reinforcement, and constructing reinforced concrete extensions, complete in place, to the required penetration, as shown on the plans, as specified in these specifications and in the special provisions, and as directed by the Engineer.

The seventh paragraph in Section 49-6.02, "Payment," of the Standard Specifications is amended to read:

• The contract unit price paid for drive pile shall include full compensation for furnishing all labor, materials, tools, equipment, and incidentals, and for doing all the work involved in driving timber, concrete and steel piles, driving steel shells for cast-in-place concrete piles, placing filling materials for cast-in-place concrete piles and cutting off piles, all complete in place to the required nominal resistance and penetration as shown on the plans and as specified in these specifications and the special provisions, and as directed by the Engineer.

The ninth paragraph in Section 49-6.02, "Payment," of the Standard Specifications is amended to read:

• Full compensation for all jetting, drilling, providing special driving tips or heavier sections for steel piles or shells, or other work necessary to obtain the specified penetration and nominal resistance of the piles, for predrilling holes through embankment and filling the space remaining around the pile with sand or pea gravel, for disposing of material resulting from jetting, drilling or predrilling holes, and for all excavation and backfill involved in constructing concrete extensions as shown on the plans, and as specified in these specifications and the special provisions, and as directed by the Engineer shall be considered as included in the contract unit price paid for drive pile or in the contract price paid per meter for cast-in-drilled-hole concrete piling, and no additional compensation will be allowed therefor.

Section 49-6.02, "Payment," of the Standard Specifications is amended by adding the following paragraphs:

• Full compensation for furnishing and placing additional testing reinforcement, for load test anchorages, and for cutting off test piles, shall be considered as included in the contract price paid for piling of the type or class shown in the Engineer's Estimate, and no additional compensation will be allowed.

• No additional compensation or extension of time will be made for additional foundation investigation, installation and testing of indicator piling, cutting off piling and restoring the foundation investigation and indicator pile sites, and review of request by the Engineer.

SECTION 50: PRESTRESSING CONCRETE

Issue Date: January 4, 2008

Section 50-1.02, "Drawings," of the Standard Specifications is amended by adding the following paragraph after the second paragraph:

• Each working drawing submittal shall consist of plans for a single bridge or portion thereof. For multi-frame bridges, each frame shall require a separate working drawing submittal.

The eighth paragraph of Section 50-1.02, "Drawings," of the Standard Specifications is deleted.

Section 50-1.05, "Prestressing Steel," of the Standard Specifications is amended to read:

• Prestressing steel shall be high-tensile wire conforming to the requirements in ASTM Designation: A 421, including Supplement I; high-tensile seven-wire strand conforming to the requirements in ASTM Designation: A 416; or uncoated high-strength steel bars conforming to the requirements in ASTM Designation: A 722, including all supplementary requirements. The maximum mass requirement of ASTM Designation: A 722 will not apply.

• In addition to the requirements of ASTM Designation: A 722, for deformed bars, the reduction of area shall be determined from a bar from which the deformations have been removed. The bar shall be machined no more than necessary to remove the deformations over a length of 300 mm, and reduction will be based on the area of the machined portion.

CONTRACT NO. 04-012024

CONTRACT CHANGE ORDER NO 106

SHEET 47 OF 267

• In addition to the requirements specified herein, epoxy-coated seven-wire prestressing steel strand shall be grit impregnated and filled in conformance with the requirements in ASTM Designation: A 882/A 882M, including Supplement I, and the following:

A. The coating material shall be on the Department's list of approved coating materials for epoxy-coated strand, available from the Transportation Laboratory.
B. The film thickness of the coating after curing shall be 381 μm to 1143 μm.
C. Prior to coating the strand, the Contractor shall furnish to the Transportation Laboratory a representative 230-g sample from each batch of epoxy coating material to be used. Each sample shall be packaged in an airtight container identified with the manufacturer's name and batch number.
D. Prior to use of the epoxy-coated strand in the work, written certifications referenced in ASTM Designation: A 882/A 882M, including a representative load-elongation curve for each size and grade of strand to be used and a copy of the quality control tests performed by the manufacturer, shall be furnished to the Engineer.
E. In addition to the requirements in Section 50-1.10, "Samples for Testing," four 1.5-m long samples of coated strand and one 1.5-m long sample of uncoated strand of each size and reel shall be furnished to the Engineer for testing. These samples, as selected by the Engineer, shall be representative of the material to be used in the work.
F. Epoxy-coated strand shall be cut using an abrasive saw.
G. All visible damage to coatings caused by shipping and handling, or during installation, including cut ends, shall be repaired in conformance with the requirements in ASTM Designation: A 882/A 882M. The patching material shall be furnished by the manufacturer of the epoxy powder and shall be applied in conformance with the manufacturer's written recommendations. The patching material shall be compatible with the original epoxy coating material and shall be inert in concrete.

• All bars in any individual member shall be of the same grade, unless otherwise permitted by the Engineer.

• When bars are to be extended by the use of couplers, the assembled units shall have a tensile strength of not less than the manufacturer's minimum guaranteed ultimate tensile strength of the bars. Failure of any one sample to meet this requirement will be cause for rejection of the heat of bars and lot of couplers. The location of couplers in the member shall be subject to approval by the Engineer.

• Wires shall be straightened if necessary to produce equal stress in all wires or wire groups or parallel lay cables that are to be stressed simultaneously or when necessary to ensure proper positioning in the ducts.

• Where wires are to be button-headed, the buttons shall be cold formed symmetrically about the axes of the wires. The buttons shall develop the minimum guaranteed ultimate tensile strength of the wire. No cold forming process shall be used that causes indentations in the wire. Buttonheads shall not contain wide open splits, more than 2 splits per head, or splits not parallel with the axis of the wire.

• Prestressing steel shall be protected against physical damage and rust or other results of corrosion at all times from manufacture to grouting or encasing in concrete. Prestressing steel that has sustained physical damage at any time shall be rejected. The development of visible rust or other results of corrosion shall be cause for rejection, when ordered by the Engineer.

• Epoxy-coated prestressing steel strand shall be covered with an opaque polyethylene sheeting or other suitable protective material to protect the strand from exposure to sunlight, salt

CONTRACT NO. 04-012084

CONTRACT CHANGE ORDER NO 108

SHEET 48 OF 267

spray, and weather. For stacked coils, the protective covering shall be draped around the perimeter of the stack. The covering shall be adequately secured; however, it should allow for air circulation around the strand to prevent condensation under the covering. Epoxy-coated strand shall not be stored within 300 m of ocean or tidal water for more than 2 months.

- Prestressing steel shall be packaged in containers or shipping forms for the protection of the steel against physical damage and corrosion during shipping and storage. Except for epoxy-coated strand, a corrosion inhibitor which prevents rust or other results of corrosion, shall be placed in the package or form, or shall be incorporated in a corrosion inhibitor carrier type packaging material, or when permitted by the Engineer, may be applied directly to the steel. The corrosion inhibitor shall have no deleterious effect on the steel or concrete or bond strength of steel to concrete. Packaging or forms damaged from any cause shall be immediately replaced or restored to original condition.
- The shipping package or form shall be clearly marked with a statement that the package contains high-strength prestressing steel, and the type of corrosion inhibitor used, including the date packaged.
- Prestressing steel for post-tensioning which is installed in members prior to placing and curing of the concrete, and which is not epoxy-coated, shall be continuously protected against rust or other results of corrosion, until grouted, by means of a corrosion inhibitor placed in the ducts or applied to the steel in the duct. The corrosion inhibitor shall conform to the provisions specified herein.
- When steam curing is used, prestressing steel for post-tensioning shall not be installed until the steam curing is completed.
- Water used for flushing ducts shall contain either quick lime (calcium oxide) or slaked lime (calcium hydroxide) in the amount of 0.01-kg/L. Compressed air used to blow out ducts shall be oil free.
- When prestressing steel for post-tensioning is installed in the ducts after completion of concrete curing, and if stressing and grouting are completed within 10 days after the installation of the prestressing steel, rust which may form during those 10 days will not be cause for rejection of the steel. Prestressing steel installed, tensioned, and grouted in this manner, all within 10 days, will not require the use of a corrosion inhibitor in the duct following installation of the prestressing steel. Prestressing steel installed as above but not grouted within 10 days shall be subject to all the requirements in this section pertaining to corrosion protection and rejection because of rust. The requirements in this section pertaining to tensioning and grouting within 10 days shall not apply to epoxy-coated prestressing steel strand.
- Any time prestressing steel for pretensioning is placed in the stressing bed and is exposed to the elements for more than 36 hours prior to encasement in concrete, adequate measures shall be taken by the Contractor, as approved by the Engineer, to protect the steel from contamination or corrosion.
- After final fabrication of the seven-wire prestressing steel strand, no electric welding of any form shall be performed on the prestressing steel. Whenever electric welding is performed on or near members containing prestressing steel, the welding ground shall be attached directly to the steel being welded.
- Pretensioned prestressing steel shall be cut off flush with the end of the member. For epoxy-coated prestressing steel, only abrasive saws shall be used to cut the steel. The exposed ends of the prestressing steel and a 25-mm strip of adjoining concrete shall be cleaned and painted. Cleaning shall be by wire brushing or abrasive blast cleaning to remove all dirt and residue on the metal or concrete surfaces. Immediately after cleaning, the surfaces shall be covered with one application of unthinned zinc-rich primer (organic vehicle type) conforming to

CONTRACT NO. 04-012024

CONTRACT CHANGE ORDER NO 108

SHEET 49 OF 267

the provisions in Section 91, "Paint," except that 2 applications shall be applied to surfaces which will not be covered by concrete or mortar. Aerosol cans shall not be used. The paint shall be thoroughly mixed at the time of application and shall be worked into any voids in the prestressing tendons.

The 2nd paragraph in Section 50-1.07, "Ducts," of the Standard Specifications is amended to read:

• Ducts shall be fabricated with either welded or interlocked seams. Galvanizing of the welded seam will not be required. Ducts shall have sufficient strength to maintain their correct alignment during placing of concrete. Joints between sections of duct shall be positive metallic connections which do not result in angle changes at the joints. Waterproof tape shall be used at the connections. Ducts shall be bent without crimping or flattening. Transition couplings connecting the ducts to anchoring devices shall be either ferrous metal or polyolefin. Ferrous metal transition couplings need not be galvanized.

The seventh paragraph in Section 50-1.07, "Ducts," of the Standard Specifications is amended to read:

• All ducts with a total length of 120 m or more shall be vented. Vents shall be placed at intervals of not more than 120 m and shall be located within 2 m of every high point in the duct profile. Vents shall be 12 mm minimum diameter standard pipe or suitable plastic pipe. Connections to ducts shall be made with metallic or plastic structural fasteners. Plastic components, if selected, shall not react with the concrete or enhance corrosion of the prestressing steel and shall be free of water soluble chlorides. The vents shall be mortar tight, taped as necessary, and shall provide means for injection of grout through the vents and for sealing the vents. Ends of vents shall be removed 25 mm below the roadway surface after grouting has been completed.

The sixth paragraph of Section 50-1.08, "Prestressing," of the Standard Specifications is amended to read:

• The following formula and friction coefficients shall be used in calculating friction losses in tendons:

$To = Txe^{(\mu\alpha + KL)}$

Where:

To = steel stress at jacking end
Tx = steel stress at any point x
e = base of Naperian logarithms
μ = friction curvature coefficient
α = total angular change of prestressing steel profile in radians from jacking end to point x
K = friction wobble coefficient (=0.00066/m)
L = length of prestressing steel from jacking end to point x

CONTRACT NO. 04-012024

CONTRACT CHANGE ORDER NO 168

SHEET 50 OF 267

Type of Steel Tendon	Length of Tendon L(m)	Type of Duct	μ
Wire or Strand	0 to less than 183	Rigid or semi-rigid galvanized sheet metal	0.15
	183 to less than 275		0.20
	275 to less than 366		0.25
	Greater than or equal to 366		0.25*
Wire or Strand	All	Plastic	0.23
	All	Rigid Steel Pipes	0.25*
High Strength Bar	All	Rigid or semi-rigid galvanized sheet metal	0.30

* With the use of lubrication

The thirteenth and fourteenth paragraphs in Section 50-1.08, "Prestressing," of the Standard Specifications are amended to read:

- Prestressing steel in pretensioned members shall not be cut or released until the concrete in the member has attained a compressive strength of not less than the value shown on the plans or 28 MPa, whichever is greater. In addition to these concrete strength requirements, when epoxy-coated prestressing steel strand is used, the steel shall not be cut or released until the temperature of the concrete surrounding the strand is less than 65°C, and falling.
- When ordered by the Engineer, prestressing steel strands in pretensioned members, if tensioned individually, shall be checked by the Contractor for loss of prestress not more than 48 hours prior to placing concrete for the members. The method and equipment for checking the loss of prestress shall be subject to approval by the Engineer. Strands which show a loss of prestress in excess of 3 percent shall be retensioned to the original computed jacking stress.

Item 2 of the eleventh paragraph in Section 50-1.08, "Prestressing," of the Standard Specifications is amended to read:

2. When the concrete is designated by class or cementitious material content, either the concrete compressive strength shall have reached the strength shown on the plans at the time of stressing or at least 28 days shall have elapsed since the last concrete to be prestressed has been placed, whichever occurs first.

The second and third paragraphs in Section 50-1.09, "Bonding and Grouting," of the Standard Specifications are amended to read:

- Grout shall consist of cement and water and may contain an admixture if approved by the Engineer.
- Cement shall conform to the provisions in Section 90-2.01A, "Cement."

The fifth paragraph in Section 50-1.10, "Samples for Testing," of the Standard Specifications is amended to read:

• The following samples of materials and tendons, selected by the Engineer from the prestressing steel at the plant or jobsite, shall be furnished by the Contractor to the Engineer well in advance of anticipated use:

A. For wire or bars, one 2-m long sample and for strand, one 1.5-m long sample, of each size shall be furnished for each heat or reel.
B. For epoxy-coated strand, one 1.5-m long sample of uncoated strand of each size shall be furnished for each reel.
C. If the prestressing tendon is a bar, one 2-m long sample shall be furnished and in addition, if couplers are to be used with the bar, two 1.25-m long samples of bar, equipped with one coupler and fabricated to fit the coupler, shall be furnished.

The first paragraph in Section 50-1.11, "Payment," of the Standard Specifications is amended to read:

• No separate payment will be made for pretensioning precast concrete members. Payment for pretensioning precast concrete members shall be considered as included in the contract price paid for furnish precast members as provided for in Section 51, "Concrete Structures."

The second paragraph in Section 50-1.11, "Payment," of the Standard Specifications is amended to read:

• The contract lump sum prices paid for prestressing cast-in-place concrete of the types listed in the Engineer's Estimate shall include full compensation for furnishing all labor, materials, tools, equipment, and incidentals, and for doing all work involved in furnishing, placing, and tensioning the prestressing steel in cast-in-place concrete structures, complete in place, as shown on the plans, as specified in these specifications and the special provisions, and as directed by the Engineer.

SECTION 51: CONCRETE STRUCTURES

Issue Date: October 5, 2007

The eleventh paragraph in Section 51-1.05, "Forms," of the Standard Specifications is amended to read:

• Form panels for exposed surfaces shall be furnished and placed in uniform widths of not less than 0.9-m and in uniform lengths of not less than 1.8 m, except at the end of continuously formed surfaces where the final panel length required is less than 1.8 m. Where the width of the member formed is less than 0.9-m, the width of the panels shall be not less than the width of the member. Panels shall be arranged in symmetrical patterns conforming to the general lines of the structure. Except when otherwise provided herein or shown on the plans, panels for vertical surfaces shall be placed with the long dimension horizontal and with horizontal joints level and continuous. Form panels for curved surfaces of columns shall be continuous for a minimum of one quarter of the circumference, or 1.8 m. For walls with sloping footings which do not abut other walls, panels may be placed with the long dimension parallel to the footing. Form panels on each side of the panel joint shall be precisely aligned, by means of supports or fasteners

CONTRACT NO. 04-0120R4

CONTRACT CHANGE ORDER NO 109

SHEET 52 OF 267

common to both panels, to result in a continuous unbroken concrete plane surface. When prefabricated soffit panels are used, form filler panels joining prefabricated panels shall have a uniform minimum width of 0.3-m and shall produce a smooth uniform surface with consistent longitudinal joint lines between the prefabricated panels.

The first and second paragraph in Section 51-1.06A, "Falsework Design and Drawings," of the Standard Specifications are amended to read:

• The Contractor shall submit to the Engineer working drawings and design calculations for falsework proposed for use at bridges. For bridges where the height of any portion of the falsework, as measured from the ground line to the soffit of the superstructure, exceeds 4.25 m; or where any individual falsework clear span length exceeds 4.85 m; or where provision for vehicular, pedestrian, or railroad traffic through the falsework is made; the drawings shall be signed by an engineer who is registered as a Civil Engineer in the State of California. Six sets of the working drawings and 2 copies of the design calculations shall be furnished. Additional working drawings and design calculations shall be submitted to the Engineer when specified in "Railroad Relations and Insurance" of the special provisions.

• The falsework drawings shall include details of the falsework erection and removal operations showing the methods and sequences of erection and removal and the equipment to be used. The details of the falsework erection and removal operations shall demonstrate the stability of all or any portions of the falsework during all stages of the erection and removal operations.

The seventh paragraph in Section 51-1.06A, "Falsework Design and Drawings," of the Standard Specifications is amended to read:

• In the event that several falsework plans are submitted simultaneously, or an additional plan is submitted for review before the review of a previously submitted plan has been completed, the Contractor shall designate the sequence in which the plans are to be reviewed. In such event, the time to be provided for the review of any plan in the sequence shall be not less than the review time specified above for that plan, plus 2 weeks for each plan of higher priority which is still under review. A falsework plan submittal shall consist of plans for a single bridge or portion thereof. For multi-frame bridges, each frame shall require a separate falsework plan submittal.

Section 51-1.06A, "Falsework Design and Drawings," of the Standard Specifications is amended by adding the following paragraphs:

• If structural composite lumber is proposed for use, the falsework drawings shall clearly identify the structural composite lumber members by grade (E value), species, and type. The Contractor shall provide technical data from the manufacturer showing the tabulated working stress values of the composite lumber. The Contractor shall furnish a certificate of compliance as specified in Section 6-1.07, "Certificates of Compliance," for each delivery of structural composite lumber to the project site.

• For falsework piles with a calculated loading capacity greater than 900 kN, the falsework piles shall be designed by an engineer who is registered as either a Civil Engineer or a Geotechnical Engineer in the State of California, and the calculations shall be submitted to the Engineer.

The first paragraph in Section 51-1.06A(1), "Design Loads," of the Standard Specifications is amended to read:

• The design load for falsework shall consist of the sum of dead and live vertical loads, and an assumed horizontal load. The minimum total design load for any falsework, including members that support walkways, shall be not less than 4800 N/m² for the combined live and dead load regardless of slab thickness.

The eighth paragraph in Section 51-1.06A(1), "Design Loads," of the Standard Specifications is amended to read:

• In addition to the minimum requirements specified in this Section 51-1.06A, falsework for box girder structures with internal falsework bracing systems using flexible members capable of withstanding tensile forces only, shall be designed to include the vertical effects caused by the elongation of the flexible member and the design horizontal load combined with the dead and live loads imposed by concrete placement for the girder stems and connected bottom slabs. Falsework comprised of individual steel towers with bracing systems using flexible members capable of withstanding tensile forces only to resist overturning, shall be exempt from these additional requirements.

The third paragraph in Section 51-1.06B, "Falsework Construction," of the Standard Specifications is amended to read:

• When falsework is supported on piles, the piles shall be driven and the actual nominal resistance assessed in conformance with the provisions in Section 49, "Piling."

Section 51-1.06B, "Falsework Construction," of the Standard Specifications is amended by adding the following paragraphs:

• For falsework piles with a calculated nominal resistance greater than 1800 kN, the Contractor shall conduct dynamic monitoring of pile driving and generate field acceptance criteria based on a wave equation analysis. These analyses shall be signed by an engineer who is registered as a Civil Engineer in the State of California and submitted to the Engineer prior to completion of falsework erection.

• Prior to the placement of falsework members above the stringers, the final bracing system for the falsework shall be installed.

Section 51-1.06C, "Removing Falsework," of the Standard Specifications is amended by adding the following paragraph:

• The falsework removal operation shall be conducted in such a manner that any portion of the falsework not yet removed remains in a stable condition at all times.

The sixth paragraph in Section 51-1.09, "Placing Concrete," of the Standard Specifications is amended to read:

• Vibrators used to consolidate concrete containing epoxy-coated bar reinforcement or epoxy-coated prestressing steel shall have a resilient covering to prevent damage to the epoxy-coating on the reinforcement or prestressing steel.

The fourth paragraph in Section 51-1.12D, "Sheet Packing, Preformed Pads, and Board Fillers," of the Standard Specifications is amended to read:

• Expanded polystyrene shall be a commercially available polystyrene board. Expanded polystyrene shall have a minimum flexural strength of 240 kPa determined in conformance with the requirements in ASTM Designation: C 203 and a compressive yield strength of between 110 and 275 kPa at 5 percent compression. Surfaces of expanded polystyrene against which concrete is placed shall be faced with hardboard. Hardboard shall be 3 mm minimum thickness, conforming to ANSI A135.4, any class. Other facing materials may be used provided they furnish equivalent protection. Boards shall be held in place by nails, waterproof adhesive, or other means approved by the Engineer.

Section 51-1.12F, "Sealed Joints," of the Standard Specifications is amended by adding the following paragraph:

• The opening of the joints at the time of placing shall be that shown on the plans adjusted for temperature. Care shall be taken to avoid impairment of the clearance in any manner.

The first paragraph in Section 51-1.12F, "Sealed Joints," of the Standard Specifications is amended to read:

• Where shown on the plans, joints in structures shall be sealed with joint seals, joint seal assemblies, or seismic joints in conformance with the details shown on the plans, the provisions in these specifications, and the special provisions.

The 2nd paragraph of Section 51-1.12F, "Sealed Joints," of the Standard Specifications is amended to read:

• Type A and AL joint seals shall consist of a groove in the concrete that is filled with field-mixed silicone sealant.

The fourth paragraph in Section 51-1.12F, "Sealed Joints," of the Standard Specifications is amended to read:

• Joint seal assemblies and seismic joints shall consist of metal or metal and elastomeric assemblies which are anchored or cast into a recess in the concrete over the joint. Strip seal joint seal assemblies consist of only one joint cell. Modular unit joint seal assemblies consist of more than one joint cell.

The fifth paragraph in Section 51-1.12F, "Sealed Joints," of the Standard Specifications is amended to read:

• The Movement Rating (MR) shall be measured normal to the longitudinal axis of the joint. The type of seal to be used for the MR shown on the plans shall be as follows:

Movement Rating (MR)	Seal Type
MR ≤ 25 mm	Type A or Type B
25 mm < MR ≤ 50 mm	Type B
50 mm < MR ≤ 100 mm	Joint Seal Assembly (Strip Seal)
MR > 100 mm	Joint Seal Assembly (Modular Unit) or Seismic Joint

The 1st paragraph of Section 51-1.12F(3)(a), "Type A and AL Seal," of the Standard Specifications is amended to read:

- The sealant must consist of a 2-component silicone sealant that will withstand up to ±50 percent movement.

The 2nd paragraph of Section 51-1.12F(3)(a), "Type A and AL Seal," of the Standard Specifications is amended to read:

- Silicone sealants must be tested under California Test 435 and must comply with the following:

Specification	Requirement
Modulus at 150 percent elongation	35–520 kPa
Recovery	17 mm max.
Notch Test	Notched or loss of bond 6 mm, max.
Water Resistance	Notched or loss of bond 6 mm, max.
Ultraviolet Exposure ASTM Designation: G 154, Table X2.1,Cycle 2.	No more than slight checking or cracking.
Cone Penetration	4.5-12.0 mm

The 3rd paragraph of Section 51-1.12F(3)(a), "Type A and AL Seal," of the Standard Specifications is deleted.

The 8th paragraph of Section 51-1.12F(3)(a), "Type A and AL Seal," of the Standard Specifications is deleted.

The 10th paragraph of Section 51-1.12F(3)(a), "Type A and AL Seal," of the Standard Specifications is amended to read:

- A Certificate of Compliance accompanied by a certified test report must be furnished for each batch of silicone sealant in conformance with the provisions in Section 6-1.07, "Certificates of Compliance."

The 2nd paragraph of Section 51-1.12F(3)(b), "Type B Seal," of the Standard Specifications is amended to read:

- The preformed elastomeric joint seal must conform to the requirements in ASTM D 2628 and the following:

1. The seal must consist of a multichannel, nonporous, homogeneous material furnished in a finished extruded form.
2. The minimum depth of the seal measured at the contact surface must be at least 95 percent of the minimum uncompressed width of the seal as designated by the manufacturer.
3. When tested in conformance with the requirements in California Test 673 for Type B seals, joint seals must provide a movement rating (MR) of not less than that shown on the plans.
4. The top and bottom edges of the joint seal must maintain continuous contact with the sides of the groove over the entire range of joint movement.
5. The seal must be furnished full length for each joint with no more than 1 shop splice in any 18 m length of seal.
6. The Contractor must demonstrate the adequacy of the procedures to be used in the work before installing seals in the joints.
7. One field splice per joint may be made at locations and by methods approved by the Engineer. The seals are to be manufactured full length for the intended joint, then cut at the approved splice section and rematched before splicing. The Contractor must submit splicing details prepared by the joint seal manufacturer for approval before beginning splicing work.
8. Shop splices and field splices must have no visible offset of exterior surfaces and must show no evidence of bond failure.
9. At all open ends of the seal that would admit water or debris, each cell must be filled to a depth of 80 mm with commercial quality open cell polyurethane foam or closed by other means subject to approval by the Engineer.

The 7th paragraph of Section 51-1.12F(3)(b), "Type B Seal," of the Standard Specifications is amended to read:

- The joint seal must be installed full length for each joint with equipment that does not twist or distort the seal, elongate the seal longitudinally, or otherwise cause damage to the seal or to the concrete forming the groove.

Section 51-1.12F(3)(c), "Joint Seal Assemblies," of the Standard Specifications is amended to read:

(c) Joint Seal Assemblies and Seismic Joints

- Joint seal assemblies and seismic joints shall be furnished and installed in joints in bridge decks as shown on the plans and as specified in the special provisions.

The eighth paragraph in Section 51-1.12H(1), "Plain and Fabric Reinforced Elastomeric Bearing Pads," of the Standard Specifications is amended to read:

- The elastomer, as determined from test specimens, shall conform to the following:

Test	ASTM Designation	Requirement
Tensile strength, MPa	D 412	15.5 Min.
Elongation at break, percent	D 412	350 Min.
Compression set, 22 h at 70°C, percent	D 395 (Method B)	25 Max.
Tear strength, kN/m	D 624 (Die C)	31.5 Min.
Hardness (Type A)	D 2240 with 2 kg. mass	55 ±5
Ozone resistance 20% strain, 100 h at 40°C ±2°C	D 1149 (except 100 ±20 parts per 100 000 000)	No cracks
Instantaneous thermal stiffening at -40°C	D 1043	Shall not exceed 4 times the stiffness measured at 23°C
Low temperature brittleness at -40°C	D 746 (Procedure B)	Pass

The table in the ninth paragraph of Section 51-1.12H(1), "Plain and Fabric Reinforced Elastomeric Bearing Pads," of the Standard Specifications is amended to read:

Tensile strength, percent	-15
Elongation at break, percent	-40; but not less than 300% total elongation of the material
Hardness, points	+10

The first paragraph in Section 51-1.12H(2), "Steel Reinforced Elastomeric Bearings," of the Standard Specifications is amended to read:

• Steel reinforced elastomeric bearings shall conform to the requirements for steel-laminated elastomeric bearings in ASTM Designation: D 4014 and the following:

A. The bearings shall consist of alternating steel laminates and internal elastomer laminates with top and bottom elastomer covers. Steel laminates shall have a nominal thickness of 1.9 mm (14 gage). Internal elastomer laminates shall have a thickness of 12 mm, and top and bottom elastomer covers shall each have a thickness of 6 mm. The combined thickness of internal elastomer laminates and top and bottom elastomer covers shall be equal to the bearing pad thickness shown on the plans. The elastomer cover to the steel laminates at the sides of the bearing shall be 3 mm. If guide pins or other devices are used to control the side cover over the steel laminates, any exposed portions of the steel laminates shall be sealed by vulcanized patching. The length, width, or diameter of the bearings shall be as shown on the plans.
B. The total thickness of the bearings shall be equal to the thickness of elastomer laminates and covers plus the thickness of the steel laminates.
C. Elastomer for steel reinforced elastomeric bearings shall conform to the provisions for elastomer in Section 51-1.12H(1), "Plain and Fabric Reinforced Elastomeric Bearing Pads."
D. A Certificate of Compliance conforming to the provisions in Section 6-1.07, "Certificates of Compliance," shall be furnished to the Engineer certifying that the bearings to be furnished conform to all of the above provisions. The Certificate of Compliance shall be supported by a certified copy of the results of tests performed by the manufacturer on the bearings.

CONTRACT NO. 04-012024

CONTRACT CHANGE ORDER NO 108

SHEET 56 OF 267

E. One sample bearing shall be furnished to the Engineer from each lot of bearings to be furnished for the contract. Samples shall be available at least 3 weeks in advance of intended use. The sample bearing shall be one of the following:

Bearing Pad Thickness as Shown on the Plans	Sample Bearing
≤ 50 mm	Smallest complete bearing shown on the plans
> 50 mm	* 57 ± 3 mm thick sample not less than 200 mm x 305 mm in plan and cut by the manufacturer from the center of one of the thickest complete bearings

* The sample bearing plus remnant parts of the complete bearing shall be furnished to the Engineer.

F. A test specimen taken from the sample furnished to the Engineer will be tested in conformance with the requirements in California Test 663. Specimens tested shall show no indication of loss of bond between the elastomer and steel laminates.

The first paragraph in Section 51-1.135, "Mortar," of the Standard Specifications is amended to read:

• Mortar shall be composed of cementitious material, sand, and water proportioned and mixed as specified in this Section 51-1.135.

The third paragraph in Section 51-1.135, "Mortar," of the Standard Specifications is amended to read:

• The proportion of cementitious material to sand, measured by volume, shall be 1:2 unless otherwise specified.

The fourth paragraph in Section 51-1.14, "Waterstops," of the Standard Specifications is amended to read:

• Neoprene shall be manufactured from a vulcanized elastomeric compound containing neoprene as the sole elastomer and shall conform to the following:

CONTRACT NO. 04-0120R4

CONTRACT CHANGE ORDER NO 108

SHEET 59 OF 267

Test	ASTM Designation	Requirement
Tensile strength, MPa	D 412	13.8 Min.
Elongation at break, percent	D 412	300 Min.
Compression set, 22 h at 70°C, percent	D 395 (Method B)	30 Max.
Tear strength, kN/m	D 624 (Die C)	26.3 Min.
Hardness (Type A)	D 2240	55±5
Ozone resistance 20% strain, 100 h at 38°C ±1°C	D 1149 (except 100± 20 parts per 100 000 000)	No cracks
Low temperature brittleness at -40°C	D 746 (Procedure B)	Pass
Flame resistance	C 542	Must not propagate flame
Oil Swell, ASTM Oil #3, 70 h at 100°C, volume change, percent	D 471	80 Max.
Water absorption, immersed 7 days at 70°C, change in mass, percent	D 471	15 Max.

The first sentence of the fourth paragraph in Section 51-1.17, "Finish Bridge Decks," of the Standard Specifications is amended to read:

• The smoothness of completed roadway surfaces of structures, approach slabs and the adjacent 15 m of approach pavement, and the top surfaces of concrete decks which are to be covered with another material, will be tested by the Engineer with a bridge profilograph in conformance with the requirements in California Test 547 and the requirements herein.

Section 51-1.17, "Finishing Bridge Decks," of the Standard Specifications is amended by deleting the seventh, thirteenth and fourteenth paragraphs and adding the following subsection:

51-1.17A DECK CRACK TREATMENT

• The Contractor shall use all means necessary to minimize the development of shrinkage cracks.

• The Contractor shall remove all equipment and materials from the deck and clean the surface as necessary for the Engineer to measure the surface crack intensity. Surface crack intensity will be determined by the Engineer after completion of concrete cure, before prestressing, and before the release of falsework. In any 50 square meter portion of deck within the limits of the new concrete deck, should the intensity of cracking be such that there are more than 5 m of cracks whose width at any location exceeds 0.5 mm, the deck shall be treated with methacrylate resin. The area of deck to be treated shall have a width that extends for the entire width of new deck inside the concrete barriers and a length that extends at least 1.5 m beyond the furthest single continuous crack outside the 50 square meter portion, measured from where that crack exceeds 0.5 mm in width, as determined by the Engineer.

• Deck crack treatment shall include furnishing, testing, and application of methacrylate resin and sand. If grinding is required, deck treatment shall take place before grinding.

51-1.17A(1) Submittals

• Before starting deck treatment, the Contractor shall submit plans in conformance with Section 5-1.02, "Plans and Working Drawings," for the following:

1. Public safety plan for the use of methacrylate resin
2. Placement plan for the construction operation

• The plans shall identify materials, equipment, and methods to be used.

• The public safety plan for the use of methacrylate resin shall include details for the following:

1. Shipping
2. Storage
3. Handling
4. Disposal of residual methacrylate resin and the containers

• The placement plan for construction shall include the following:

1. Schedule of deck treatment for each bridge. The schedule shall be consistent with "Maintaining Traffic," of the special provisions and shall include time for the Engineer to perform California Test 342.
2. Methods and materials to be used, including the following:

    2.1. Description of equipment for applying the resin
    2.2. Description of equipment for applying the sand
    2.3. Gel time range and final cure time for the resin

• If the measures proposed in the safety plan are inadequate to provide for public safety associated with the use of methacrylate resin, the Engineer will reject the plan and direct the Contractor to revise the plan. Directions for revisions will be in writing and include detailed comments. The Engineer will notify the Contractor of the approval or rejection of a submitted or revised plan within 15 days of receipt of that plan.

• In the event the Engineer fails to complete the review within the time allowed, and if, in the opinion of the Engineer, completion of the work is delayed or interfered with by reason of the Engineer's delay in completing the review, the Contractor will be compensated for any resulting loss, and an extension of time will be granted, in the same manner as provided for in Section 8-1.09, "Right of Way Delays."

51-1.17A(2) Materials

• Before using methacrylate resin, a Material Safety Data Sheet shall be submitted for each shipment of resin.

• Methacrylate resin shall be low odor and have a high molecular weight. Before adding initiator, the resin shall have a maximum volatile content of 30 percent when tested in conformance with the requirements in ASTM Designation: D 2369, and shall conform to the following:

CONTRACT NO. 04-0120R4

CONTRACT CHANGE ORDER NO 108

SHEET 161 OF 267

PROPERTY	REQUIREMENT	TEST METHOD
* Viscosity	0.025 Pa·s, maximum, (Brookfield RVT with UL adaptor, 50 RPM at 25°C	ASTM D 2196
* Specific Gravity	0.90 minimum, at 25°C	ASTM D 1475
* Flash Point	82°C, minimum	ASTM D 3278
* Vapor Pressure	1.0 mm Hg, maximum, at 25°C	ASTM D 323
Tack-free Time	400 minutes, maximum, at 25°C	Specimen prepared per California Test 551
PCC Saturated Surface-Dry Bond Strength	3.5 MPa, minimum at 24 hours and 21±1°C	California Test 551
* Test shall be performed before adding initiator.		

51-1.17A(3) Testing

- The Contractor shall allow 20 days for sampling and testing by the Engineer of the methacrylate resin before proposed use. If bulk resin is to be used, the Contractor shall notify the Engineer in writing at least 15 days before the delivery of the bulk resin to the job site. Bulk resin is any resin stored in containers in excess of 209 liters.
- Before starting production treatment, the Contractor shall treat a test area of approximately 50 square meters that is within the project limits and at a location approved by the Engineer. When available the test area shall be outside of the traveled way. Weather and pavement conditions during the test treatment shall be similar to those expected on the deck. Equipment used for testing shall be similar to those used for deck treating operations.
- During test and production deck treatment, test tiles shall be used to evaluate the resin cure time. The Contractor shall coat at least one 102 mm x 102 mm commercial quality smooth glazed tile for each batch of methacrylate resin. The coated tile shall be placed adjacent to the corresponding treated area. Sand shall not be applied to the test tiles.
- The acceptance criteria for a treated area is as follows:

1. The test tiles are dry to the touch.
2. The treated deck surface is tack free (non-oily).
3. The sand cover adheres and resists brushing by hand.
4. Excess sand has been removed by vacuuming or sweeping.
5. The coefficient of friction is at least 0.35 when tested in conformance with California Test 342.

- If a test or production area fails to meet the acceptance criteria, as determined by the Engineer, the treatment will be rejected, and the treatment shall be removed and replaced until the area complies with the acceptance criteria.

CONTRACT NO. 04-012024

CONTRACT CHANGE ORDER NO 106

SHEET 62 OF 267

51-1.17A(4) Construction

- Equipment shall be fitted with suitable traps, filters, drip pans, or other devices as necessary to prevent oil or other deleterious material from being deposited on the deck.
- Before deck treatment with methacrylate resin, the bridge deck surface shall be cleaned by abrasive blasting, and all loose material shall be blown from visible cracks using high-pressure air. Concrete curing seals shall be cleaned from the deck surface to be treated, and the deck shall be dry when blast cleaning is performed. If the deck surface becomes contaminated at any time before placing the resin, the deck surface shall be cleaned by abrasive blasting.
- Where abrasive blasting is being performed within 3 m of a lane occupied by public traffic, the residue including dust shall be removed immediately after contact between the abrasive and the surface being treated. The removal shall be by a vacuum attachment operating concurrently with the abrasive blasting operation.
- A compatible promoter/initiator system shall be capable of providing the resin gel time range shown on the placement plan. Gel time shall be adjusted to compensate for the changes in temperature throughout treatment application.
- Resin shall be applied by machine and by using a two-part resin system with a promoted resin for one part and an initiated resin for the other part. This two-part resin system shall be combined at equal volumes to the spray bars through separate positive displacement pumps. Combining of the 2 components shall be by either static in-line mixers or by external intersecting spray fans. The pump pressure at the spray bars shall not be great enough to cause appreciable atomization of the resin. Compressed air shall not be used to produce the spray. A shroud shall be used to enclose the spray bar apparatus.
- At the Contractor's option, manual application may be used. For manual application, (1) the quantity of resin mixed with promoter and initiator shall be limited to 20 L at a time, and (2) the resin shall be distributed by squeegees and brooms within 10 minutes after application.
- The Contractor shall apply methacrylate resin only to the specified area. Barriers, railing, joints, and drainage facilities shall be adequately protected to prevent contamination by the treatment material. Contaminated items shall be repaired at the Contractor's expense.
- The relative humidity shall be less than 90 percent at the time of treatment. The prepared area shall be dry and the surface temperature shall be at least 10°C , and not more than 38°C when the resin is applied. The rate of application of promoted/initiated resin shall be 2.2 square meter per liter; the exact rate shall be determined by the Engineer.
- The deck surfaces to be treated shall be completely covered with resin so the resin penetrates and fills all cracks. The resin shall be applied within 5 minutes after complete mixing. A significant increase in viscosity shall be cause for rejection. Excess material shall be redistributed by squeegees or brooms within 10 minutes after application. For textured deck surfaces, including grooved surfaces, excess material shall be removed from the texture indentations.
- After the resin has been applied, at least 20 minutes shall elapse before applying sand. The sand shall be commercial quality dry blast sand. At least 95 percent of the sand shall pass the 2.36-mm sieve and at least 95 percent shall be retained on the 850-µm sieve. The sand shall be applied at a rate of approximately one kilogram per square meter or until refusal as determined by the Engineer.
- Traffic will not be allowed on treated areas until the acceptance criteria has been met as determined by the Engineer.

The second paragraph in Section 51-1.18C, "Class 2 Surface Finish (Gun Finish)," of the Standard Specifications is amended to read:

CONTRACT NO. 04-0A2024

CONTRACT CHANGE ORDER NO 108

SHEET 63 OF 267

• When Class 2 surface finish (gun finish) is specified, ordinary surface finish shall first be completed. The concrete surfaces shall then be abrasive blasted to a rough texture and thoroughly washed down with water. While the washed surfaces are damp, but not wet, a finish coating of machine applied mortar, approximately 6 mm thick, shall be applied in not less than 2 passes. The coating shall be pneumatically applied and shall consist of either (1) sand, cementitious material, and water mechanically mixed prior to its introduction to the nozzle or (2) premixed sand and cementitious material to which water is added prior to its expulsion from the nozzle. The use of admixtures shall be subject to the approval of the Engineer as provided in Section 90, "Portland Cement Concrete." Unless otherwise specified, supplementary cementitious materials will not be required. The proportion of cementitious material to sand shall be not less than one to 4, unless otherwise directed by the Engineer. Sand shall be of a grading suitable for the purpose intended. The machines shall be operated and the coating shall be applied in conformance with standard practice. The coating shall be firmly bonded to the concrete surfaces on which it is applied.

The fifth paragraph in Section 51-1.18C, "Class 2 Surface Finish (Gun Finish)," of the Standard Specifications is amended to read:

• When surfaces to be finished are in pedestrian undercrossings, the sand shall be silica sand and the cementitious material shall be standard white portland cement.

The fourteenth paragraph in Section 51-1.23, "Payment," of the Standard Specifications is amended by deleting "and injecting epoxy in cracks".

Section 51-1.23, "Payment," of the Standard Specifications is amended by adding the following:

• Full compensation for deck crack treatment, including execution of the public safety plan, shall be considered as included in the contract price paid per cubic yard for structural concrete, bridge, and no additional compensation will be allowed therefor.

SECTION 52: REINFORCEMENT

Issue Date: December 7, 2007

The first paragraph in Section 52-1.02A, "Bar Reinforcement," of the Standard Specifications is amended to read:

• Reinforcing bars shall be low-alloy steel deformed bars conforming to the requirements in ASTM Designation: A 706/A 706M, except that deformed or plain billet-steel bars conforming to the requirements in ASTM Designation: A 615/A 615M, Grade 280 or 420, may be used as reinforcement in the following 5 categories:

A. Slope and channel paving,
B. Minor structures,
C. Sign and signal foundations (pile and spread footing types),
D. Roadside rest facilities, and

E. Concrete barrier Type 50 and Type 60 series and temporary railing.

The third paragraph in Section 52-1.04, "Inspection," of the Standard Specifications is amended to read:

• A Certificate of Compliance conforming to the provisions in Section 6-1.07, "Certificates of Compliance," shall also be furnished for each shipment of epoxy-coated bar reinforcement or wire reinforcement certifying that the coated reinforcement conforms to the requirements in ASTM Designation: A 775/A 775M or A 884/A 884M respectively, and the provisions in Section 52-1.02B, "Epoxy-coated Reinforcement." The Certificate of Compliance shall include all of the certifications specified in ASTM Designation: A 775/A 775M or A 884/A 884M respectively.

The third paragraph of Section 52-1.06, "Bending," of the Standard Specifications is amended to read:

• Hooks and bends shall conform to the provisions of the Building Code Requirements for Structural Concrete of the American Concrete Institute.

Section 52-1.07 "Placing," of the Standard Specifications is amended by deleting item C of the third paragraph.

The eleventh paragraph in Section 52-1.07, "Placing," of the Standard Specifications is amended to read:

• Attention is directed to the provisions in Section 7-1.09, "Public Safety." Whenever a portion of an assemblage of bar reinforcing steel that is not encased in concrete exceeds 6 m in height, the Contractor shall submit to the Engineer for approval, in accordance with the provisions in Section 5-1.02, "Plans and Working Drawings," working drawings and design calculations for the temporary support system to be used. The working drawings and design calculations shall be signed by an engineer who is registered as a Civil Engineer in the State of California. The temporary support system shall be designed to resist all expected loads and shall be adequate to prevent collapse or overturning of the assemblage. If the installation of forms or other work requires revisions to or temporary release of any portion of the temporary support system, the working drawings shall show the support system to be used during each phase of construction. The minimum horizontal wind load to be applied to the bar reinforcing steel assemblage, or to a combined assemblage of reinforcing steel and forms, shall be the sum of the products of the wind impact area and the applicable wind pressure value for each height zone. The wind impact area is the total projected area of the cage normal to the direction of the applied wind. Wind pressure values shall be determined from the following table:

Height Zone (Meters above ground)	Wind Pressure Value (Pa)
0-9.0	960
9.1-15.0	1200
15.1-30.0	1440
Over 30	1675

Section 52-1.08 "Splicing," of the Standard Specifications is amended to read:

52-1.08 SPLICING

• Splices of reinforcing bars shall consist of lap splices, service splices, or ultimate butt splices.

• Splicing of reinforcing bars will not be permitted at a location designated on the plans as a "No-Splice Zone." At the option of the Contractor, reinforcing bars may be continuous at locations where splices are shown on the plans. The location of splices, except where shown on the plans, shall be determined by the Contractor using available commercial lengths where practicable.

• Unless otherwise shown on the plans, splices in adjacent reinforcing bars at any particular section shall be staggered. The minimum distance between staggered lap splices or mechanical lap splices shall be the same as the length required for a lap splice in the largest bar. The minimum distance between staggered butt splices shall be 600 mm, measured between the midpoints of the splices along a line which is centered between the axes of the adjacent bars.

52-1.08A Lap Splicing Requirements

• Splices made by lapping shall consist of placing reinforcing bars in contact and wiring them together, maintaining the alignment of the bars and the minimum clearances. Should the Contractor elect to use a butt welded or mechanical splice at a location not designated on the plans as requiring a service or ultimate butt splice, this splice shall conform to the testing requirements for service splice.

• Reinforcing bars shall not be spliced by lapping at locations where the concrete section is not sufficient to provide a minimum clear distance of 50 mm between the splice and the nearest adjacent bar. The clearance to the surface of the concrete specified in Section 52-1.07, "Placing," shall not be reduced.

• Reinforcing bars Nos. 43 and 57 shall not be spliced by lapping.

• Where ASTM Designations: A 615/A 615M, Grade 420 or A 706/A 706M reinforcing bars are required, the length of lap splices shall be as follows: Reinforcing bars No. 25 or smaller shall be lapped at least 45 diameters of the smaller bar joined; and reinforcing bars Nos. 29, 32, and 36 shall be lapped at least 60 diameters of the smaller bar joined, except when otherwise shown on the plans.

• Where ASTM Designation: A 615/A 615M, Grade 280 reinforcing bars are permitted, the length of lap splices shall be as follows: Reinforcing bars No. 25 or smaller shall be lapped at least 30 diameters of the smaller bar joined; and reinforcing bars Nos. 29, 32, and 36 shall be lapped at least 45 diameters of the smaller bar joined, except when otherwise shown on the plans.

• Splices in bundled bars shall conform to the following:

A In bundles of 2 bars, the length of the lap splice shall be the same as the length of a single bar lap splice.

B. In bundles of 3 bars, the length of the lap splice shall be 1.2 times the length of a single bar lap splice.

• Welded wire fabric shall be lapped such that the overlap between the outermost cross wires is not less than the larger of:

A. 150 mm,

B. The spacing of the cross wires plus 50 mm, or
C. The numerical value of the longitudinal wire size (MW-Size Number) times 370 divided by the spacing of the longitudinal wires in millimeters.

52-1.08B Service Splicing and Ultimate Butt Splicing Requirements

• Service splices and ultimate butt splices shall be either butt welded or mechanical splices, shall be used at the locations shown on the plans, and shall conform to the requirements of these specifications and the special provisions.

52-1.08B(1) Mechanical Splices

• Mechanical splices to be used in the work shall be on the Department's current prequalified list before use. The prequalified list can be obtained from the Department's internet site listed in the special provisions or by contacting the Transportation Laboratory directly.

• When tested in conformance with the requirements in California Test 670, the total slip shall not exceed the values listed in the following table:

Reinforcing Bar Number	Total Slip (μm)
13	250
16	250
19	250
22	350
25	350
29	350
32	450
36	450
43	600
57	750

• Slip requirements shall not apply to mechanical lap splices, splices that are welded, or splices that are used on hoops.

• Splicing procedures shall be in conformance with the manufacturer's recommendations, except as modified in this section. Splices shall be made using the manufacturer's standard equipment, jigs, clamps, and other required accessories.

• Splice devices shall have a clear coverage of not less than 40 mm measured from the surface of the concrete to the outside of the splice device. Stirrups, ties, and other reinforcement shall be adjusted or relocated, and additional reinforcement shall be placed, if necessary, to provide the specified clear coverage to reinforcement.

• The Contractor shall furnish the following information for each shipment of splice material in conformance with the provisions in Section 6-1.07, "Certificates of Compliance:"

A. The type or series identification of the splice material including tracking information for traceability.
B. The bar grade and size number to be spliced.
C. A copy of the manufacturer's product literature giving complete data on the splice material and installation procedures.
D. A statement that the splicing systems and materials used in conformance with the manufacturer's installation procedures will develop the required tensile strengths, based on the nominal bar area, and will conform to the total slip requirements and the other requirements in these specifications.

CONTRACT NO. 04-0120R4

CONTRACT CHANGE ORDER NO 108

SHEET 67 OF 267

E. A statement that the splice material conforms to the type of mechanical splice in the Department's current prequalified list.

52-1.08B(2) Butt Welded Splices

- Except for resistance butt welds, butt welded splices of reinforcing bars shall be complete joint penetration butt welds conforming to the requirements in AWS D 1.4, and these specifications.
- Welders and welding procedures shall be qualified in conformance with the requirements in AWS D 1.4.
- Only the joint details and dimensions as shown in Figure 3.2, "Direct Butt Joints," of AWS D 1.4, shall be used for making complete joint penetration butt welds of bar reinforcement. Split pipe backing shall not be used.
- Butt welds shall be made with multiple weld passes using a stringer bead without an appreciable weaving motion. The maximum stringer bead width shall be 2.5 times the diameter of the electrode and slagging shall be performed between each weld pass. Weld reinforcement shall not exceed 4 mm in convexity.
- Electrodes used for welding shall meet the minimum Charpy V-notch impact requirement of 27°J at –20°C.
- For welding of bars conforming to the requirements of ASTM Designation: A 615/A 615M, Grade 280 or Grade 420, the requirements of Table 5.2, "Minimum Preheat and Interpass Temperatures," of AWS D 1.4 are superseded by the following:

  The minimum preheat and interpass temperatures shall be 200°C for Grade 280 bars and 300°C for Grade 420 bars. Immediately after completing the welding, at least 150 mm of the bar on each side of the splice shall be covered by an insulated wrapping to control the rate of cooling. The insulated wrapping shall remain in place until the bar has cooled below 90°C.

- When welding different grades of reinforcing bars, the electrode shall conform to Grade 280 bar requirements and the preheat shall conform to the Grade 420 bar requirements.
- In the event that any of the specified preheat, interpass, and post weld cooling temperatures are not met, all weld and heat affected zone metal shall be removed and the splice rewelded.
- Welding shall be protected from air currents, drafts, and precipitation to prevent loss of heat or loss of arc shielding. The method of protecting the welding area from loss of heat or loss of arc shielding shall be subject to approval by the Engineer.
- Reinforcing bars shall not be direct butt spliced by thermite welding.
- Procedures to be used in making welded splices in reinforcing bars, and welders employed to make splices in reinforcing bars, shall be qualified by tests performed by the Contractor on sample splices of the type to be used, before making splices to be used in the work.

52-1.08B(3) Resistance Butt Welds

- Shop produced resistance butt welds shall be produced by a fabricator who is approved by the Transportation Laboratory. The list of approved fabricators can be obtained from the Department's internet site or by contacting the Transportation Laboratory directly.

CONTRACT NO. 04-0120R4

CONTRACT CHANGE ORDER NO 108

SHEET 68 OF 267

• Before manufacturing hoops using resistance butt welding, the Contractor shall submit to the Engineer the manufacturer's Quality Control (QC) manual for the fabrication of hoops. As a minimum, the QC manual shall include the following:

A. The pre-production procedures for the qualification of material and equipment.
B. The methods and frequencies for performing QC procedures during production.
C. The calibration procedures and calibration frequency for all equipment.
D. The welding procedure specification (WPS) for resistance welding.
E. The method for identifying and tracking lots.

52-1.08C Service Splice and Ultimate Butt Splice Testing Requirements

• The Contractor shall designate in writing a splicing Quality Control Manager (QCM). The QCM shall be responsible directly to the Contractor for 1) the quality of all service and ultimate butt splicing including the inspection of materials and workmanship performed by the Contractor and all subcontractors; and 2) submitting, receiving, and approving all correspondence, required submittals, and reports regarding service and ultimate splicing to and from the Engineer.

• The QCM shall not be employed or compensated by any subcontractor, or by other persons or entities hired by subcontractors, who will provide other services or materials for the project. The QCM may be an employee of the Contractor.

• Testing on prequalification and production sample splices shall be performed at the Contractor's expense, at an independent qualified testing laboratory. The laboratory shall not be employed or compensated by any subcontractor, or by other persons or entities hired by subcontractors who will provide other services or materials for the project, and shall have the following:

A. Proper facilities, including a calibrated tensile testing machine capable of breaking the largest size of reinforcing bar to be tested.
B. A device for measuring the total slip of the reinforcing bars across the splice to the nearest 25 μm, that, when placed parallel to the longitudinal axis of the bar is able to simultaneously measure movement across the splice at 2 locations 180 degrees apart.
C. Operators who have received formal training for performing the testing requirements of ASTM Designation: A 370 and California Test 670.
D. A record of annual calibration of testing equipment performed by an independent third party that has 1) standards that are traceable to the National Institute of Standards and Technology, and 2) a formal reporting procedure, including published test forms.

• The Contractor shall provide samples for quality assurance testing in conformance with the provisions in these specifications and the special provisions.

• Prequalification and production sample splices and testing shall conform to California Test 670 and these specifications.

• The Contractor shall ensure that sample splices are properly secured and transported to the testing laboratory in such a manner that no alterations to the physical conditions occur during transportation. Sample splices shall be tested in the same condition as received. No modifications to the sample splices shall be made before testing.

• Each set or sample splice, as defined herein, shall be identified as representing either a prequalification or production test sample splice.

CONTRACT NO. 04-012024

CONTRACT CHANGE ORDER NO 106

SHEET 69 OF 267

• For the purpose of production testing, a lot of either service splices or ultimate butt splices is defined as 1) 150, or fraction thereof, of the same type of mechanical splices used for each bar size and each bar deformation pattern that is used in the work, or 2) 150, or fraction thereof, of complete joint penetration butt welded splices or resistance butt welded splices for each bar size used in the work. If different diameters of hoop reinforcement are shown on the plans, separate lots shall be used for each different hoop diameter.

• Whenever a lot of splices is rejected, the rejected lot and subsequent lots of splices shall not be used in the work until 1) the QCM performs a complete review of the Contractor's quality control process for these splices, 2) a written report is submitted to the Engineer describing the cause of failure for the splices in this lot and provisions for preventing similar failures in future lots, and 3) the Engineer has provided the Contractor with written notification that the report is acceptable. The Engineer shall have 3 working days after receipt of the report to provide notification to the Contractor. In the event the Engineer fails to provide notification within the time allowed, and if, in the opinion of the Engineer, completion of the work is delayed or interfered with by reason of the Engineer's delay in providing notification, the Contractor will be compensated for any resulting loss, and an extension of time will be granted in the same manner as provided for in Section 8-1.09, "Right of Way Delays."

52-1.08C(1) Splice Prequalification Report

• Before using any service splices or ultimate butt splices in the work, the Contractor shall submit a Splice Prequalification Report. The report shall include splice material information, names of the operators who will be performing the splicing, and descriptions of the positions, locations, equipment, and procedures that will be used in the work.

• The Splice Prequalification Report shall also include certifications from the fabricator for prequalifications of operators and procedures based on sample tests performed no more than 2 years before submitting the report. Each operator shall be certified by performing 2 sample splices for each bar size of each splice type that the operator will be performing in the work. For deformation-dependent types of splice devices, each operator shall be certified by performing 2 additional samples for each bar size and deformation pattern that will be used in the work.

• Prequalification sample splices shall be tested by an independent qualified testing laboratory and shall conform to the appropriate production test criteria and slip requirements specified herein. When epoxy-coated reinforcement is required, resistance butt welded sample splices shall have the weld flash removed by the same procedure as will be used in the work, before coating and testing. The Splice Prequalification Report shall include the certified test results for all prequalification sample splices.

• The QCM shall review and approve the Splice Prequalification Report before submitting it to the Engineer for approval. The Contractor shall allow 2 weeks for the review and approval of a complete report before performing any service splicing or ultimate butt splicing in the work. In the event the Engineer fails to complete the review within the time allowed, and in the opinion of the Engineer, completion of the work is delayed or interfered with by reason of the Engineer's delay in completing the review, the Contractor will be compensated for any resulting loss, and an extension of time will be granted, in the same manner as provided for in Section 8-1.09, "Right of Way Delays."

CONTRACT NO. 04-012024

CONTRACT CHANGE ORDER NO 106

SHEET 70 OF 267

52-1.08C(2) Service Splice Test Criteria

• Service production and quality assurance sample splices shall be tensile tested in conformance with the requirements in ASTM Designation: A 370 and California Test 670 and shall develop a minimum tensile strength of not less than 550 MPa.

52-1.08C(2)(a) Production Test Requirements for Service Splices

• Production tests shall be performed by the Contractor's independent laboratory for all service splices used in the work. A production test shall consist of testing 4 sample splices prepared for each lot of completed splices. The samples shall be prepared by the Contractor using the same splice material, position, operators, location, and equipment, and following the same procedure as used in the work.

• At least one week before testing, the Contractor shall notify the Engineer in writing of the date when and the location where the testing of the samples will be performed.

• The 4 samples from each production test shall be securely bundled together and identified with a completed sample identification card before shipment to the independent laboratory. The card will be furnished by the Engineer. Bundles of samples containing fewer than 4 samples of splices shall not be tested.

• Before performing any tensile tests on production test sample splices, one of the 4 samples shall be tested for, and shall conform to, the requirements for total slip. Should this sample not meet the total slip requirements, one retest, in which the 3 remaining samples are tested for total slip, will be allowed. Should any of the 3 remaining samples not conform to the total slip requirements, all splices in the lot represented by this production test will be rejected.

• If 3 or more sample splices from a production test conform to the provisions in this Section 52-1.08C(2),"Service Splice Test Criteria," all splices in the lot represented by this production test will be considered acceptable.

• Should only 2 sample splices from a production test conform to the provisions in this Section 52-1.08C(2), "Service Splice Test Criteria," one additional production test shall be performed on the same lot of splices. This additional production test shall consist of testing 4 samples splices that have been randomly selected by the Engineer and removed by the Contractor from the actual completed lot of splices. Should any of the 4 splices from this additional test fail to conform to these provisions, all splices in the lot represented by these production tests will be rejected.

• If only one sample splice from a production test conforms to the provisions in this Section 52-1.08C(2), "Service Splice Test Criteria," all splices in the lot represented by this production test will be rejected.

• If a production test for a lot fails, the Contractor shall repair or replace all reinforcing bars from which sample splices were removed before the Engineer selects additional splices from this lot for further testing.

52-1.08C(2)(b) Quality Assurance Test Requirements for Service Splices

• For the first production test performed, and for at least one, randomly selected by the Engineer, of every 5 subsequent production tests, or portion thereof, the Contractor shall concurrently prepare 4 additional service quality assurance sample splices. These service quality assurance sample splices shall be prepared in the same manner as specified herein for service production sample splices.

• These 4 additional quality assurance sample splices shall be shipped to the Transportation Laboratory for quality assurance testing. The 4 sample splices shall be securely bundled together

CONTRACT NO. 04-012024

CONTRACT CHANGE ORDER NO 108

SHEET 71 OF 267

and identified by location and contract number with weatherproof markings before shipment. Bundles containing fewer than 4 samples of splices will not be tested. Sample splices not accompanied by the supporting documentation required in Section 52-1.08B(1), for mechanical splices, or in Section 52-1.08B(3), for resistance butt welds, will not be tested.

- Quality assurance testing will be performed in conformance with the requirements for service production sample splices in Section 52-1.08C(2)(a), "Production Test Requirements for Service Splices."

52-1.08C(3) Ultimate Butt Splice Test Criteria

- Ultimate production and quality assurance sample splices shall be tensile tested in conformance with the requirements described in ASTM Designation: A 370 and California Test 670.
- A minimum of 1 control bar shall be removed from the same bar as, and adjacent to, all ultimate prequalification, production, and quality assurance sample splices. The lengths of control bars shall conform to the lengths specified for sample splices in California Test 670. The portion of adjacent bar remaining in the work shall also be identified with weatherproof markings that correspond to its adjacent control bar.
- Each sample splice and its associated control bar shall be identified and marked as a set. Each set shall be identified as representing a prequalification, production, or quality assurance sample splice.
- The portion of hoop reinforcing bar, removed to obtain a sample splice and control bar, shall be replaced using a prequalified ultimate mechanical butt splice, or the hoop shall be replaced in kind.
- Reinforcing bars, other than hoops, from which sample splices are removed, shall be repaired using ultimate mechanical butt splices conforming to the provisions in Section 52-1.08C(1), "Splice Prequalification Report," or the bars shall be replaced in kind. These bars shall be repaired or replaced such that no splices are located in any "No Splice Zone" shown on the plans.
- Ultimate production and quality assurance sample splices shall rupture in the reinforcing bar either: 1) outside of the affected zone or 2) within the affected zone, provided that the sample splice has achieved at least 95 percent of the ultimate tensile strength of the control bar associated with the sample splice. In addition, necking of the bar, as defined in California Test 670, shall occur at rupture regardless of whether the bar breaks inside or outside the affected zone.
- The affected zone is the portion of the reinforcing bar where any properties of the bar, including the physical, metallurgical, or material characteristics, have been altered by fabrication or installation of the splice.
- The ultimate tensile strength shall be determined for all control bars by tensile testing the bars to rupture, regardless of where each sample splice ruptures. If 2 control bars are tested for one sample splice, the bar with the lower ultimate tensile strength shall be considered the control bar.

52-1.08C(3)(a) Production Test Requirements for Ultimate Butt Splices

- Production tests shall be performed for all ultimate butt splices used in the work. A production test shall consist of testing 4 sets of sample splices and control bars removed from each lot of completed splices, except when quality assurance tests are performed.

CONTRACT NO. 04-0120R4

CONTRACT CHANGE ORDER NO 108

SHEET 72 OF 267

- After the splices in a lot have been completed, and the bars have been epoxy-coated when required, the QCM shall notify the Engineer in writing that the splices in this lot conform to the specifications and are ready for testing. Except for hoops, sample splices will be selected by the Engineer at the job site. Sample splices for hoops will be selected by the Engineer either at the job site or a fabrication facility.
- After notification has been received, the Engineer will randomly select the 4 sample splices to be removed from the lot and place tamper-proof markings or seals on them. The Contractor shall select the adjacent control bar for each sample splice bar, and the Engineer will place tamper-proof markings or seals on them. These ultimate production sample splices and control bars shall be removed by the Contractor, and tested by an independent qualified testing laboratory.
- At least one week before testing, the Contractor shall notify the Engineer in writing of the date when and the location where the testing of the samples will be performed.
- A sample splice or control bar from any set will be rejected if a tamper-proof marking or seal is disturbed before testing.
- The 4 sets from each production test shall be securely bundled together and identified with a completed sample identification card before shipment to the independent laboratory. The card will be furnished by the Engineer. Bundles of samples containing fewer than 4 sets of splices shall not be tested.
- Before performing any tensile tests on production test sample splices, one of the 4 sample splices shall be tested for, and shall conform to, the requirements for total slip. Should this sample splice not meet these requirements, one retest, in which the 3 remaining sample splices are tested for total slip, will be allowed. Should any of the 3 remaining sample splices not conform to these requirements, all splices in the lot represented by this production test will be rejected.
- If 3 or more sample splices from a production test conform to the provisions in Section 52-1.08C(3), "Ultimate Butt Splice Test Criteria," all splices in the lot represented by this production test will be considered acceptable.
- Should only 2 sample splices from a production test conform to the provisions in Section 52-1.08C(3), "Ultimate Butt Splice Test Criteria," one additional production test shall be performed on the same lot of splices. Should any of the 4 sample splices from this additional test fail to conform to these provisions, all splices in the lot represented by these production tests will be rejected.
- If only one sample splice from a production test conforms to the provisions in Section 52-1.08C(3), "Ultimate Butt Splice Test Criteria," all splices in the lot represented by this production test will be rejected.
- If a production test for a lot fails, the Contractor shall repair or replace all reinforcing bars from which sample splices were removed, complete in place, before the Engineer selects additional splices from this lot for further testing.
- Production tests will not be required on repaired splices from a lot, regardless of the type of prequalified ultimate mechanical butt splice used to make the repair. However, should an additional production test be required, the Engineer may select any repaired splice for the additional production test.

52-1.08C(3)(b) Quality Assurance Test Requirements for Ultimate Butt Splices

- For the first production test performed, and for at least one, randomly selected by the Engineer, of every 5 subsequent production tests, or portion thereof, the Contractor shall

CONTRACT NO. 04-012024

CONTRACT CHANGE ORDER NO 108

SHEET 73 OF 207

concurrently prepare 4 additional ultimate quality assurance sample splices along with associated control bars.

- Each time 4 additional ultimate quality assurance sample splices are prepared, 2 of these quality assurance sample splice and associated control bar sets and 2 of the production sample splice and associated control bar sets, together, shall conform to the requirements for ultimate production sample splices in Section 52-1.08C(3)(a),"Production Test Requirements for Ultimate Butt Splices."
- The 2 remaining quality assurance sample splice and associated control bar sets, along with the 2 remaining production sample splice and associated control bar sets shall be shipped to the Transportation Laboratory for quality assurance testing. The 4 sets shall be securely bundled together and identified by location and contract number with weatherproof markings before shipment. Bundles containing fewer than 4 sets will not be tested.
- Quality assurance testing will be performed in conformance with the requirements for ultimate production sample splices in Section 52-1.08C(3)(a), "Production Test Requirements for Ultimate Butt Splices."

52-1.08C(3)(c) Nondestructive Splice Tests

- When the specifications allow for welded sample splices to be taken from other than the completed lot of splices, the Contractor shall meet the following additional requirements.
- Except for resistance butt welded splices, radiographic examinations shall be performed on 25 percent of all complete joint penetration butt welded splices from a production lot. The size of a production lot will be a maximum of 150 splices. The Engineer will select the splices which will compose the production lot and also the splices within each production lot to be radiographically examined.
- All required radiographic examinations of complete joint penetration butt welded splices shall be performed by the Contractor in conformance with the requirements in AWS D 1.4 and these specifications.
- Before radiographic examination, welds shall conform to the requirements in Section 4.4, "Quality of Welds," of AWS D 1.4.
- Should more than 12 percent of the splices which have been radiographically examined in any production lot be defective, an additional 25 percent of the splices, selected by the Engineer from the same production lot, shall be radiographically examined. Should more than 12 percent of the cumulative total of splices tested from the same production lot be defective, all remaining splices in the lot shall be radiographically examined.
- Additional radiographic examinations performed due to the identification of defective splices shall be at the Contractor's expense.
- All defects shall be repaired in conformance with the requirements in AWS D 1.4.
- The Contractor shall notify the Engineer in writing 48 hours before performing any radiographic examinations.
- The radiographic procedure used shall conform to the requirements in AWS D1.1, AWS D1.4, and the following:

A. Two exposures shall be made for each complete joint penetration butt welded splice. For each of the 2 exposures, the radiation source shall be centered on each bar to be radiographed. The first exposure shall be made with the radiation source placed at zero degrees from the top of the weld and perpendicular to the weld root and identified with a station mark of "0." The second exposure shall be at 90 degrees to the "0" station mark and shall be identified with a station mark of "90." When obstructions prevent a

CONTRACT NO. 04-012024

CONTRACT CHANGE ORDER NO 108

SHEET 74 OF 267

90 degree placement of the radiation source for the second exposure, and when approved in writing by the Engineer, the source may be rotated, around the centerline of the reinforcing bar, a maximum of 25 degrees.

B. For field produced complete joint penetration butt welds, no more than one weld shall be radiographed during one exposure. For shop produced complete joint penetration butt welds, if more than one weld is to be radiographed during one exposure, the angle between the root line of each weld and the direction to the radiation source shall be not less than 65 degrees.

C. Radiographs shall be made by either X-ray or gamma ray. Radiographs made by X-ray or gamma rays shall have densities of not less than 2.3 nor more than 3.5 in the area of interest. A tolerance of 0.05 in density is allowed for densitometer variations. Gamma rays shall be from the iridium 192 isotope and the emitting specimen shall not exceed 4.45 mm in the greatest diagonal dimension.

D. The radiographic film shall be placed perpendicular to the radiation source at all times; parallel to the root line of the weld unless source placement determines that the film must be turned; and as close to the root of the weld as possible.

E. The minimum source to film distance shall be maintained so as to ensure that all radiographs maintain a maximum geometric unsharpness of 0.020 at all times, regardless of the size of the reinforcing bars.

F. Penetrameters shall be placed on the source side of the bar and perpendicular to the radiation source at all times. One penetrameter shall be placed in the center of each bar to be radiographed, perpendicular to the weld root, and adjacent to the weld. Penetrameter images shall not appear in the weld area.

G. When radiography of more than one weld is being performed per exposure, each exposure shall have a minimum of one penetrameter per bar, or 3 penetrameters per exposure. When 3 penetrameters per exposure are used, one penetrameter shall be placed on each of the 2 outermost bars of the exposure, and the remaining penetrameter shall be placed on a centrally located bar.

H. An allowable weld buildup of 4 mm may be added to the total material thickness when determining the proper penetrameter selection. No image quality indicator equivalency will be accepted. Wire penetrameters or penetrameter blocks shall not be used.

I. Penetrameters shall be sufficiently shimmed using a radiographically identical material. Penetrameter image densities shall be a minimum of 2.0 and a maximum of 3.6.

J. Radiographic film shall be Class 1, regardless of the size of reinforcing bars.

K. Radiographs shall be free of film artifacts and processing defects, including, but not limited to, streaks, scratches, pressure marks or marks made for the purpose of identifying film or welding indications.

L. Each splice shall be clearly identified on each radiograph and the radiograph identification and marking system shall be established between the Contractor and the Engineer before radiographic inspection begins. Film shall be identified by lead numbers only; etching, flashing or writing in identifications of any type will not be permitted. Each piece of film identification information shall be legible and shall include, as a minimum, the following information: Contractor's name, date, name of nondestructive testing firm, initials of radiographer, contract number, part number and weld number. The letter "R" and repair number shall be placed directly after the weld number to designate a radiograph of a repaired weld.

CONTRACT NO. 04-0120R4

CONTRACT CHANGE ORDER NO 108

SHEET 75 OF 267

M. Radiographic film shall be developed within a time range of one minute less to one minute more than the film manufacturer's recommended maximum development time. Sight development will not be allowed.

N. Processing chemistry shall be done with a consistent mixture and quality, and processing rinses and tanks shall be clean to ensure proper results. Records of all developing processes and any chemical changes to the developing processes shall be kept and furnished to the Engineer upon request. The Engineer may request, at any time, that a sheet of unexposed film be processed in the presence of the Engineer to verify processing chemical and rinse quality.

O. The results of all radiographic interpretations shall be recorded on a signed certification and a copy kept with the film packet.

P. Technique sheets prepared in conformance with the requirements in ASME Boiler and Pressure Vessels Code, Section V, Article 2 Section T-291 shall also contain the developer temperature, developing time, fixing duration and all rinse times.

52-1.08D Reporting Test Results

• A Production Test Report for all testing performed on each lot shall be prepared by the independent testing laboratory performing the testing and submitted to the QCM for review and approval. The report shall be signed by an engineer who represents the laboratory and is registered as a Civil Engineer in the State of California. The report shall include, as a minimum, the following information for each test: contract number, bridge number, lot number and location, bar size, type of splice, length of mechanical splice, length of test specimen, physical condition of test sample splice and any associated control bar, any notable defects, total measured slip, ultimate tensile strength of each splice, and for ultimate butt splices, limits of affected zone, location of visible necking area, ultimate tensile strength and 95 percent of this ultimate tensile strength for each control bar, and a comparison between 95 percent of the ultimate tensile strength of each control bar and the ultimate tensile strength of its associated splice.

• The QCM must review, approve, and forward each Production Test Report to the Engineer for review before the splices represented by the report are encased in concrete. The Engineer will have 3 working days to review each Production Test Report and respond in writing after a complete report has been received. Should the Contractor elect to encase any splices before receiving notification from the Engineer, it is expressly understood that the Contractor will not be relieved of the responsibility for incorporating material in the work that conforms to the requirements of the plans and specifications. Material not conforming to these requirements will be subject to rejection. Should the Contractor elect to wait to encase splices pending notification by the Engineer, and in the event the Engineer fails to complete the review and provide notification within the time allowed, and if, in the opinion of the Engineer, the work is delayed or interfered with by reason of the Engineer's delay in completing the review, the Contractor will be compensated for any resulting loss, and an extension of time will be granted, in the same manner as provided for in Section 8-1.09, "Right of Way Delays."

• Quality assurance test results for each bundle of 4 sets or 4 samples of splices will be reported in writing to the Contractor within 3 working days after receipt of the bundle by the Transportation Laboratory. In the event that more than one bundle is received on the same day, 2 additional working days shall be allowed for providing test results for each additional bundle received. A test report will be made for each bundle received. Should the Contractor elect to encase splices before receiving notification from the Engineer, it is expressly understood that the Contractor will not be relieved of the responsibility for incorporating material in the work that conforms to the requirements of the plans and specifications. Material not conforming to these

CONTRACT NO. 04-012024

CONTRACT CHANGE ORDER NO 1085

SHEET 76 OF 267

requirements will be subject to rejection. Should the Contractor elect to wait to encase splices pending notification by the Engineer, and in the event the Engineer fails to complete the review within the time allowed, and in the opinion of the Engineer, completion of the work is delayed or interfered with by reason of the Engineer's delay in completing the review, the Contractor will be compensated for any resulting loss, and an extension of time will be granted, in the same manner as provided for in Section 8-1.09, "Right of Way Delays."

Section 52-1.11, "Payment," of the Standard Specifications is amended by adding the following paragraph after the seventh paragraph:

• If a portion or all of the reinforcing steel is epoxy-coated more than 480 air line kilometers from both Sacramento and Los Angeles, additional shop inspection expenses will be sustained by the State. Whereas it is and will be impracticable and extremely difficult to ascertain and determine the actual increase in these expenses, it is agreed that payment to the Contractor for furnishing the epoxy-coated reinforcement will be reduced $5000 for each epoxy-coating facility located more than 480 air line kilometers from both Sacramento and Los Angeles and an additional $3000 ($8000 total) for each epoxy-coating facility located more than 4800 air line kilometers from both Sacramento and Los Angeles.

SECTION 53: SHOTCRETE

Issue Date: November 2, 2007

The third paragraph in Section 53-1.01, "Description," of the Standard Specifications is amended to read:

• The dry-mix process shall consist of delivering dry mixed aggregate and cementitious material pneumatically or mechanically to the nozzle body and adding water and mixing the materials in the nozzle body. The wet-mix process shall consist of delivering mixed aggregate, cement, and water pneumatically to the nozzle and adding any admixture at the nozzle.

The first through fourth paragraphs in Section 53-1.02, "Materials," of the Standard Specifications is amended to read:

• Cementitious material, fine aggregate, and mixing water shall conform to the provisions in Section 90, "Portland Cement Concrete."

• Shotcrete to be mixed and applied by the dry-mix process shall consist of one part cementitious material to not more than 4.5 parts fine aggregate, thoroughly mixed in a dry state before being charged into the machine. Measurement may be either by volume or by mass. The fine aggregate shall contain not more than 6 percent moisture by mass.

• Shotcrete to be mixed and applied by the wet-mix process shall consist of cementitious material, fine aggregate, and water and shall contain not less than 375 kilograms of cementitious material per cubic meter. A maximum of 30 percent pea gravel may be substituted for fine aggregate. The maximum size of pea gravel shall be such that 100 percent passes the 12.5 mm screen and at least 90 percent passes the 9.5 mm screen.

• Admixtures may be added to shotcrete and shall conform to the provisions in Section 90-4, "Admixtures."

The third subparagraph of the third paragraph in Section 53-1.04, "Placing Shotcrete," of the Standard Specifications is amended to read:

Aggregate and cementitious material that have been mixed for more than 45 minutes shall not be used unless otherwise permitted by the Engineer.

Section 53-1.07, "Measurement," of the Standard Specifications is amended to read:

• Quantities of shotcrete will be measured by the cubic meter computed from measurements, along the slope, of actual areas placed and the theoretical thickness shown on the plans. The Department does not pay for shotcrete placed outside the dimensions shown on the plans or to fill low foundation.

Section 53-1.08, "Payment," of the Standard Specifications is amended to read:

• The contract price paid per cubic meter for shotcrete shall include full compensation for furnishing all labor, materials, tools, equipment, and incidentals, and for doing all the work involved in placing shotcrete, including preparing the foundation, wire reinforcement, structure backfill, joint filling material, and if required by the plans, drains with sacked pervious backfill material, as shown on the plans, as specified in these specifications and the special provisions, and as directed by the Engineer.

SECTION 55: STEEL STRUCTURES

Issue Date: January 5, 2007

The third and fourth paragraphs of Section 55-1.01, "Description," of the Standard Specifications are amended to read:

• Details of connections for highway bridges selected for use by the Contractor shall conform to the AASHTO LRFD Bridge Design Specifications with Caltrans Amendments.
• Details of design selected by the Contractor, fabrication and workmanship, for steel railway bridges shall conform to the requirements of the Specifications for Steel Railway Bridges, for Fixed Spans Not Exceeding 400 Feet in Length of the AREMA, as set forth in the special provisions.

The third paragraph of Section 55-1.05, "Falsework," of the Standard Specifications is amended to read:

• Construction methods and equipment employed by the Contractor shall conform to the provisions in Section 7-1.02, "Load Limitations." Loads imposed on existing, new or partially completed structures shall not exceed the load carrying capacity of the structure, or portion of structure, as determined by the AASHTO LRFD Bridge Design Specifications with Caltrans Amendments.

The fourth and fifth paragraphs of Section 55-2.01, "Description," of the Standard Specifications are amended to read:

CONTRACT NO. 04-012ORY4

CONTRACT CHANGE ORDER NO 108

SHEET 78 OF 267

• All structural steel plate used for the fabrication of tension members, tension flanges, eyebars and hanger plates and for splice plates of tension members, tension flanges and eyebars shall meet the longitudinal Charpy V-notch impact value requirements specified herein. Sampling procedures shall conform to the requirements in ASTM Designation: A 673. The H (Heat) frequency of testing shall be used for structural steels conforming to the requirements in ASTM Designations: A 709/A 709M, Grades 36 [250], 50 [345], 50W [345W], and HPS 50W [345W]. The P (Piece) frequency of testing shall be used for structural steel conforming to the requirements in ASTM Designation: A 709/A 709M, Grades HPS 70W [485W], 100 [690], and 100W [690W]. Charpy V-notch impact values shall be determined in conformance with the requirements in ASTM Designation: E 23.

• Charpy V-notch (CVN) impact values shall conform to the following minimum values for non fracture critical members:

CONTRACT NO. 04-012024

CONTRACT CHANGE ORDER NO 106

SHEET 79 OF 267

Material Conforming to ASTM Designation: A 709/A 709M	CVN Impact Value (Joules at Temp.)
Grade 36 [250]	20 at 4°C
Grade 50 [345]* (50 mm and under in thickness)	20 at 4°C
Grade 50W [345W]* (50 mm and under in thickness)	20 at 4°C
Grade 50 [345]* (Over 50 mm to 100 mm in thickness)	27 at 4°C
Grade 50W [345W]* (Over 50 mm to 100 mm in thickness)	27 at 4°C
Grade HPS 50W [345W]* (100 mm and under in thickness)	27 at -12°C
Grade HPS 70W [485]* (100 mm and under in thickness)	34 at -23°C
Grade 100 [490] (65 mm and under in thickness)	34 at -18°C
Grade 100W [490W] (Over 65 mm to 100 mm in thickness)	48 at -18°C

* If the yield point of the material exceeds 450 MPa, the temperature for the CVN impact value for acceptability shall be reduced 8°C for each increment of 70 MPa above 450 MPa.

Structural Steel Materials

Material	Specification
Structural steel:	
Carbon steel	ASTM: A 709/A 709M, Grade 36 [250] or {A 36/A 36M}a
High strength low alloy columbium vanadium steel	ASTM: A 709/A 709M, Grade 50 [345]or {A 572/A 572M, Grade 50 [345]}a
High strength low alloy structural steel	ASTM: A 709/A 709M, Grade 50W [345W], Grade HPS 50W [HSP 345W], or {A 588/A 588M}a
High strength low alloy structural steel plate	ASTM: A 709/A 709M, Grade HPS 70W [HPS 485W]
High-yield strength, quenched and tempered alloy steel plate suitable for welding	ASTM: A 709/A 709M, Grade 100 [690] and Grade 100W [690W], or {A 514/A 514M}a
Steel fastener components for general applications:	
Bolts and studs	ASTM: A 307
Headed anchor bolts	ASTM: A 307, Grade B, including S1 supplementary requirements
Nonheaded anchor bolts	ASTM: A 307, Grade C, including S1 supplementary requirements and S1.6 of AASHTO: M 314 supplementary requirements or AASHTO: M 314, Grade 36 or 55, including S1 supplementary requirements
High-strength bolts and studs	ASTM: A 449, Type 1
High-strength threaded rods	ASTM: A 449, Type 1
High-strength nonheaded anchor bolts	ASTM: A 449, Type 1
Nuts	ASTM: A 563, including Appendix X1b
Washers	ASTM: F 844

CONTRACT NO. 04-012024

CONTRACT CHANGE ORDER NO 108

SHEET 80 OF 207

Components of high-strength steel fastener assemblies for use in structural steel joints:	
Bolts	ASTM: A 325, Type 1
Tension control bolts	ASTM: F 1852, Type 1
Nuts	ASTM: A 563, including Appendix X1b
Hardened washers	ASTM : F 436, Type 1, Circular, including S1 supplementary requirements
Direct tension indicators	ASTM: F 959, Type 325, zinc-coated
Carbon steel for forgings, pins and rollers	ASTM: A 668/A 668M, Class D
Alloy steel for forgings	ASTM: A 668/A 668M, Class G
Pin nuts	ASTM: A 36/A 36M
Carbon-steel castings	ASTM: A 27/A 27M, Grade 65-35, Class 1
Malleable iron castings	ASTM: A 47, Grade 32510 or A 47M, Grade 22010
Gray iron castings	ASTM: A 48, Class 30B
Carbon steel structural tubing	ASTM: A 500, Grade B or A 501
Steel pipe (Hydrostatic testing will not apply)	ASTM: A 53, Type E or S, Grade B; A 106, Grade B; or A 139, Grade B
Stud connectors	ASTM: A 108 and AASHTO/AWS D1.5

a Grades that may be substituted for the equivalent ASTM Designation: A 709 steel, at the Contractor's option, subject to the modifications and additions specified and to the requirements of A 709.

b Zinc-coated nuts that will be tightened beyond snug or wrench tight shall be furnished with a dry lubricant conforming to Supplementary Requirement S2 in ASTM Designation: A 563.

The first sentence of the first paragraph of Section 55-2.02, "Structural Steel," of the Standard Specifications is amended to read:

• Unless otherwise specified or shown on the plans, all structural steel plates, shapes, and bars shall conform to ASTM Designation: A 709/A 709M, Grade 50 [345].

The first paragraph in Section 55-3.05, "Flatness of Faying and Bearing Surfaces," of the Standard Specifications is amended to read:

• Surfaces of bearing and base plates and other metal surfaces that are to come in contact with each other or with ground concrete surfaces or with asbestos sheet packing shall be flat to within one mm tolerance in 305 mm and to within 2 mm tolerance overall. Surfaces of bearing and base plates and other metal bearing surfaces that are to come in contact with preformed fabric pads, elastomeric bearing pads, or mortar shall be flat to within 3 mm tolerance in 305 mm and to within 5 mm tolerance overall.

Section 55-3.14, "Bolted Connections," of the Standard Specifications is amended by adding the following after the ninth paragraph:

• If a torque multiplier is used in conjunction with a calibrated wrench as a method for tightening fastener assemblies to the required tension, both the multiplier and the wrench shall be calibrated together as a system. The same length input and output sockets and extensions that will be used in the work shall also be included in the calibration of the system. The

CONTRACT NO. 04-0120R4

CONTRACT CHANGE ORDER NO 108

SHEET 81 OF 267

manufacturer's torque multiplication ratio shall be adjusted during calibration of the system, such that when this adjusted ratio is multiplied by the actual input calibrated wrench reading, the product is a calculated output torque that is within 2 percent of the true output torque. When this system is used in the work to perform any installation tension testing, rotational capacity testing, fastener tightening, or tension verification, it shall be used, intact as calibrated.

The second paragraph of Section 55-3.17, "Welding," of the Standard Specifications is amended to read:

• The minimum size of all fillet welds, except those to reinforce groove welds, shall be as shown in the following table:

Base Metal Thickness of the Thicker Part Joined (Millimeters)	*Minimum Size of Fillet Weld (Millimeters)
To 19 inclusive	6
Over 19	8

* Except that the weld size need not exceed the thickness of the thinner part joined.

The third paragraph in Section 55-3.19, "Bearings and Anchorages," of the Standard Specifications is amended to read:

• Immediately before setting bearing assemblies or masonry plates directly on ground concrete surfaces, the Contractor shall thoroughly clean the surfaces of the concrete and the metal to be in contact and shall apply a coating of nonsag polysulfide or polyurethane caulking conforming to the requirements in ASTM Designation: C 920 to contact areas to provide full bedding.

The fifth paragraph in Section 55-3.19, "Bearings and Anchorages," of the Standard Specifications is amended to read:

• Mortar to be placed below masonry plates or bearing plates of the bearing assemblies and in anchor bolt sleeves or canisters shall conform to the provisions in Section 51-1.135, "Mortar," except that the proportion of cementitious material to sand shall be 1:3.

The sixth paragraph of Section 55-4.02, "Payment," of the Standard Specifications is amended to read:

• If a portion or all of the structural steel is fabricated more than 480 air line kilometers from both Sacramento and Los Angeles, additional shop inspection expenses will be sustained by the State. Whereas it is and will be impracticable and extremely difficult to ascertain and determine the actual increase in these expenses, it is agreed that payment to the Contractor for furnishing the structural steel from each fabrication site located more than 480 air line kilometers from both Sacramento and Los Angeles will be reduced $5000 or by an amount computed at $0.044 per kilogram of structural steel fabricated, whichever is greater, or in the case of each fabrication site located more than 4800 air line kilometers from both Sacramento and Los Angeles, payment will be reduced $8000 or by $0.079 per kilogram of structural steel fabricated, whichever is greater.

CONTRACT NO. 04-012024

CONTRACT CHANGE ORDER NO 108

SHEET 82 OF 267

SECTION 56: SIGNS

Issue Date: March 16, 2007

Section 56-1.01, "Description," of the Standard Specifications is amended by deleting the third paragraph.

Section 56-1.02A, "Bars, Plates and Shapes," of the Standard Specifications is amended to read:

56-1.02A Bars, Plates, Shapes, and Structural Tubing

- Bars, plates, and shapes shall be structural steel conforming to the requirements in ASTM Designation: A 36/A 36M, except, at the option of the Contractor, the light fixture mounting channel shall be continuous-slot steel channel conforming to the requirements in ASTM Designation: A 1011/A 1011M, Designation SS, Grade 33[230], or aluminum Alloy 6063-T6 extruded aluminum conforming to the requirements in ASTM Designation: B 221 or B 221M.
- Structural tubing shall be structural steel conforming to the requirements in ASTM Designation: A 500, Grade B.
- Removable sign panel frames shall be constructed of structural steel conforming to the requirements in ASTM Designation: A 36/A 36M.

Section 56-1.02B, "Sheets," of the Standard Specifications is amended to read:

56-1.02B Sheets

- Sheets shall be carbon-steel sheets conforming to the requirements in ASTM Designation: A 1011/A 1011M, Designation SS, Grade 33[230].
- Ribbed sheet metal for box beam-closed truss sign structures shall be fabricated from galvanized sheet steel conforming to the requirements in ASTM Designation: A 653/A 653M, Designation SS, Grade 33[230]. Sheet metal panels shall be G 165 coating designation in conformance with the requirements in ASTM Designation: A 653/A 653M.

Section 56-1.02F, "Steel Walkway Gratings," of the Standard Specifications is amended to read:

56-1.02F Steel Walkway Gratings

- Steel walkway gratings shall be furnished and installed in conformance with the details shown on the plans and the following provisions:

A. Gratings shall be the standard product of an established grating manufacturer.
B. Material for gratings shall be structural steel conforming to the requirements in ASTM Designation: A 1011/A 1011M, Designation CS, Type B.
C. For welded type gratings, each joint shall be full resistance welded under pressure, to provide a sound, completely beaded joint.
D. For mechanically locked gratings, the method of fabrication and interlocking of the members shall be approved by the Engineer, and the fabricated grating shall be equal in strength to the welded type.

CONTRACT NO. 04-0120R4

CONTRACT CHANGE ORDER NO 108

SHEET 83 OF 267

E. Gratings shall be accurately fabricated and free from warps, twists, or other defects affecting their appearance or serviceability. Ends of all rectangular panels shall be square. The tops of the bearing bars and cross members shall be in the same plane. Gratings distorted by the galvanizing process shall be straightened.

The fifth paragraph in Section 56-1.03, "Fabrication," of the Standard Specifications is amended to read:

• Clips, eyes, or removable brackets shall be affixed to all signs and all posts and shall be used to secure the sign during shipping and for lifting and moving during erection as necessary to prevent damage to the finished galvanized or painted surfaces. Brackets on tubular sign structures shall be removed after erection. Details of the devices shall be shown on the working drawings.

The sixth through the thirteenth paragraphs in Section 56-1.03, "Fabrication," of the Standard Specifications are amended to read:

• High-strength bolted connections, where shown on the plans, shall conform to the provisions in Section 55-3.14, "Bolted Connections," except that only fastener assemblies consisting of a high-strength bolt, nut, hardened washer, and direct tension indicator shall be used.

• High-strength fastener assemblies, and any other bolts, nuts, and washers attached to sign structures shall be zinc-coated by the mechanical deposition process.

• Nuts for high-strength bolts designated as snug-tight shall not be lubricated.

• An alternating snugging and tensioning pattern for anchor bolts and high-strength bolted splices shall be used. Once tensioned, high-strength fastener components and direct tension indicators shall not be reused.

• For bolt diameters less than 10 mm, the diameter of the bolt hole shall be not more than 0.80-mm larger than the nominal bolt diameter. For bolt diameters greater than or equal to 10 mm, the diameter of the bolt hole shall be not more than 1.6 mm larger than the nominal bolt diameter.

• Sign structures shall be fabricated into the largest practical sections prior to galvanizing.

• Ribbed sheet metal panels for box beam closed truss sign structures shall be fastened to the truss members by cap screws or bolts as shown on the plans, or by 4.76 mm stainless steel blind rivets conforming to Industrial Fasteners Institute, Standard IFI-114, Grade 51. The outside diameter of the large flange rivet head shall be not less than 15.88 mm in diameter. Web splices in ribbed sheet metal panels may be made with similar type blind rivets of a size suitable for the thickness of material being connected.

• Spalling or chipping of concrete structures shall be repaired by the Contractor at the Contractor's expense.

• Overhead sign supports shall have an aluminum identification plate permanently attached near the base, adjacent to the traffic side on one of the vertical posts, using either stainless steel rivets or stainless steel screws. As a minimum, the information on the plate shall include the name of the manufacturer, the date of manufacture and the contract number.

The fourth paragraph of Section 56-1.10, "Payment," of the Standard Specifications is amended to read:

CONTRACT NO. 04-0120R4

CONTRACT CHANGE ORDER NO 108

SHEET 84 OF 267

• The contract price paid per kilogram for install sign structure of the type or types designated in the Engineer's Estimate shall include full compensation for furnishing all labor, materials, tools, equipment and incidentals, and for doing all the work involved in installing sign structures, complete in place, including installing anchor bolt assemblies, removable sign panel frames, and sign panels and performing any welding, painting or galvanizing required during installation, as shown on the plans, as specified in these specifications and the special provisions, and as directed by the Engineer.

The fifth paragraph of Section 56-2.02B, "Wood Posts," of the Standard Specifications is amended to read:

• Douglas fir and Hem-Fir posts shall be treated in conformance with the provisions in Section 58, "Preservative Treatment of Lumber, Timber and Piling," and in conformance with AWPA Use Category System: UC4A, Commodity Specification A. Posts shall be incised and the minimum retention of preservative shall be as specified in AWPA Standards.

The fourth paragraph in Section 56-2.03, "Construction," of the Standard Specifications is amended to read:

• Backfill material for metal posts shall consist of minor concrete conforming to the provisions in Section 90-10, "Minor Concrete," and shall contain not less than 275 kilograms of cementitious material per cubic meter.

SECTION 57: TIMBER STRUCTURES

Issue Date: October 12, 2004

The second paragraph of Section 57-1.02A, "Structural Timber and Lumber," of the Standard Specifications is amended to read:

• When preservative treatment of timber and lumber is required, the treatment shall conform to the provisions in Section 58, "Preservative Treatment of Lumber, Timber and Piling," and AWPA's Use Category 4B. The type of treatment to be used will be shown on the plans or specified in the special provisions.

SECTION 58: PRESERVATIVE TREATMENT OF LUMBER, TIMBER AND PILING

Issue Date: November 18, 2005

The first paragraph of Section 58-1.02, "Treatment and Retention," of the Standard Specifications is amended to read:

• Timber, lumber, and piling shall be pressure treated after millwork is completed. Preservatives, treatment, and results of treatment shall conform to the requirements in AWPA Standards U1 and T1. Treatment of lumber and timber shall conform to the specified AWPA Use Category cited in the special provisions, on the plans, or elsewhere in these specifications.

The second paragraph of Section 58-1.02, "Treatment and Retention," of the Standard Specifications is deleted.

SECTION 59: PAINTING

Issue Date: January 19, 2007

The first paragraph of Section 59-1.02, "Weather Conditions," of the Standard Specifications is amended to read:

• Paint shall be applied only on thoroughly dry surfaces and during periods of favorable weather. Blast cleaning or application of solvent-borne paint will not be permitted when the atmospheric or surface temperature is at or below 2°C or above 38°C, or when the relative humidity exceeds 85 percent at the site of the work. Application of water-borne paint will not be permitted when the atmospheric or surface temperature is at or below 10°C, or above 38°C, or when the relative humidity exceeds 75 percent at the site of the work. Application of paint will not be permitted when the steel surface temperature is less than 3°C above the dew point, or when freshly painted surfaces may become damaged by rain, fog or condensation, or when it can be anticipated that the atmospheric temperature or relative humidity will not remain within the specified application conditions during the drying period, except as provided in the following paragraph for enclosures. If uncured paint is damaged by the elements, it shall be replaced or repaired by the Contractor at the Contractor's expense.

The second paragraph of Section 59-1.05, "Protection Against Damage," of the Standard Specifications is amended to read:

• Paint or paint stains on surfaces not designated to be painted shall be removed by the Contractor at the Contractor's expense and to the satisfaction of the Engineer.

Section 59-2.01, "General," of the Standard Specifications is amended by adding the following paragraphs after the first paragraph:

• Unless otherwise specified, no painting Contractors or subcontractors will be permitted to commence work without having the following current "SSPC: The Society for Protective Coatings" (formerly the Steel Structures Painting Council) certifications in good standing:

A. For cleaning and painting structural steel in the field, certification in conformance with the requirements in Qualification Procedure No. 1, "Standard Procedure For Evaluating Painting Contractors (Field Application to Complex Industrial Structures)" (SSPC-QP 1).
B. For removing paint from structural steel, certification in conformance with the requirements in Qualification Procedure No. 2, "Standard Procedure For Evaluating Painting Contractors (Field Removal of Hazardous Coatings from Complex Structures)" (SSPC-QP 2).
C. For cleaning and painting structural steel in a permanent painting facility, certification in conformance with the requirements in Qualification Procedure No. 3, "Standard Procedure For Evaluating Qualifications of Shop Painting Applicators" (SSPC-QP 3). The AISC's Sophisticated Paint Endorsement (SPE) quality program will be considered equivalent to SSPC-QP 3.

CONTRACT NO. 04-012024

CONTRACT CHANGE ORDER NO 108

SHEET 80 OF 267

The third paragraph of Section 59-2.03, "Blast Cleaning," of the Standard Specifications is amended to read:

• Exposed steel or other metal surfaces to be blast cleaned shall be cleaned in conformance with the requirements in Surface Preparation Specification No. 6, "Commercial Blast Cleaning," of the "SSPC: The Society for Protective Coatings." Blast cleaning shall leave all surfaces with a dense, uniform, angular anchor pattern of not less than 35 µm as measured in conformance with the requirements in ASTM Designation: D 4417.

The first paragraph of Section 59-2.06, "Hand Cleaning," of the Standard Specifications is amended to read:

• Dirt, loose rust and mill scale, or paint which is not firmly bonded to the surfaces shall be removed in conformance with the requirements in Surface Preparation Specification No. 2, "Hand Tool Cleaning," of the "SSPC: The Society for Protective Coatings." Edges of old remaining paint shall be feathered.

The third and fourth paragraphs of Section 59-2.12, "Painting," of the Standard Specifications are amended to read:

• Contact surfaces of stiffeners, railings, built up members or open seam exceeding 6 mils in width that would retain moisture, shall be caulked with polysulfide or polyurethane sealing compound conforming to the requirements in ASTM Designation: C 920, Type S, Grade NS, Class 25, Use O, or other approved material.

• The dry film thickness of the paint will be measured in place with a calibrated Type 2 magnetic film thickness gage in conformance with the requirements in SSPC-PA 2, "Measurement of Dry Coating Thickness with Magnetic Gages," of the "SSPC: The Society for Protective Coatings," except that there shall be no limit to the number or location of spot measurements to verify compliance with specified thickness requirements.

The third paragraph of Section 59-2.13, "Application of Zinc-Rich Primer," of the Standard Specifications is amended to read:

• Mechanical mixers shall be used in mixing the primer. After mixing, the zinc-rich primer shall be strained through a 0.6 to 0.25 mm screen or a double layer of cheesecloth immediately prior to or during pouring into the spray pot.

SECTION 64: PLASTIC PIPE

Issue Date: January 5, 2007

The first paragraph of Section 64-1.06, "Concrete Backfill," of the Standard Specifications is amended to read:

• At locations where pipe is to be backfilled with concrete as shown on the plans, the concrete backfill shall be constructed of minor concrete or Class 4 concrete conforming to the provisions in Section 90, "Portland Cement Concrete." Minor concrete shall contain not less

CONTRACT NO. 04-012024

CONTRACT CHANGE ORDER NO 108

SHEET 87 OF 267

than 250 kg of cementitious material per cubic meter. The concrete to be used will be designated in the contract item or shown on the plans.

SECTION 65: REINFORCED CONCRETE PIPE

Issue Date: January 5, 2007

The first paragraph of Section 65-1.02, "Materials," of the Standard Specifications is amended to read:

• Cementitious material and aggregate shall conform to the provisions in Section 90-2, "Materials," except that mortar strengths relative to Ottawa sand and grading requirements shall not apply to the aggregate. Use of supplemental cementitious material shall conform to AASHTO Designation: M 170M.

Subparagraph "c" of the eleventh paragraph of Section 65-1.02A(1) "Circular Reinforced Concrete Pipe (Designated or Selected by Class)," of the Standard Specifications is amended to read:

c. Cementitious material and aggregate for non-reinforced concrete pipe shall conform to the provisions in Section 65-1.02, "Materials."

The first paragraph of Section 65-1.035, "Concrete Backfill," of the Standard Specifications is amended to read:

• At locations where pipe is to be backfilled with concrete as shown on the plans, the concrete backfill shall be constructed of minor concrete or Class 4 concrete in conformance with the provisions in Section 90, "Portland Cement Concrete." Minor concrete shall contain not less than 225 kg of cementitious material per cubic meter. The concrete to be used will be designated in the contract item.

The first subparagraph of the second paragraph of Section 65-1.06, "Joints," of the Standard Specifications is amended to read:

• Cement Mortar.- Mortar shall be composed of one part cementitious material and 2 parts sand by volume. Supplementary cementitious material will not be required.

SECTION 66: CORRUGATED METAL PIPE

Issue Date: January 5, 2007

The first paragraph of Section 66-1.045, "Concrete Backfill," of the Standard Specifications is amended to read:

• At locations where pipe is to be backfilled with concrete as shown on the plans, the concrete backfill shall be constructed of minor concrete or Class 4 concrete conforming to the provisions in Section 90, "Portland Cement Concrete." Minor concrete shall contain not less

CONTRACT NO. 04-0120R4

CONTRACT CHANGE ORDER NO 108

SHEET 88 OF 267

than 225 kg of cementitious material per cubic meter. The concrete to be used will be designated in the contract item or shown on the plans.

SECTION 68: SUBSURFACE DRAINS

Issue Date: January 5, 2007

The first and second paragraphs of Section 68-3.02D, "Miscellaneous," of the Standard Specifications are amended to read:

- Concrete for splash pads shall be produced from minor concrete conforming to the provisions in Section 90-10, "Minor Concrete." Minor concrete shall contain not less than 275 kg of cementitious material per cubic meter.
- Mortar placed where edge drain outlets and vents connect to drainage pipe and existing drainage inlets shall conform to the provisions in Section 51-1.135, "Mortar."

SECTION 70: MISCELLANEOUS FACILITIES

Issue Date: January 5, 2007

The second paragraph of Section 70-1.02C, "Flared End Sections," of the Standard Specifications is amended to read:

- Precast concrete flared end sections shall conform to the requirements for Class III Reinforced Concrete Pipe in AASHTO Designation: M 170M. Cementitious materials and aggregate shall conform to the provisions in Section 90-2, "Materials," except that mortar strengths relative to Ottawa sand and grading requirements shall not apply to the aggregate. Use of supplementary cementitious material shall conform to the requirements in AASHTO Designation: M 170M. The area of steel reinforcement per meter of flared end section shall be at least equal to the minimum steel requirements for circular reinforcement in circular pipe for the internal diameter of the circular portion of the flared end section. The basis of acceptance of the precast concrete flared end section shall conform to the requirements of Section 5.1.2 of AASHTO Designation: M 170M.

The first paragraph of Section 70-1.02H, "Precast Concrete Structures," of the Standard Specifications is amended to read:

- Precast concrete pipe risers and pipe reducers, and precast concrete pipe sections, adjustment rings and tapered sections for pipe energy dissipators, pipe inlets and pipe manholes shall conform to the requirements in AASHTO Designation: M 199M, except that the cementitious material and aggregate shall conform to the provisions in Section 90-2, "Materials," except that mortar strengths relative to Ottawa sand and grading requirements shall not apply to the aggregate. Use of supplementary cementitious material shall conform to the requirements in AASHTO Designation: M 170M.

The second paragraph of Section 70-1.03, "Installation," of the Standard Specifications is amended to read:

CONTRACT NO. 04-0120V4

CONTRACT CHANGE ORDER NO 108

SHEET 89 OF 267

• Cutoff walls for precast concrete flared end sections shall be constructed of minor concrete conforming to the provisions in Section 90-10, "Minor Concrete." Minor concrete shall contain not less than 275 kg of cementitious material per cubic meter.

SECTION 72: SLOPE PROTECTION

Issue Date: November 18, 2005

The sixth paragraph of Section 72-4.04, "Construction," of the Standard Specifications is amended to read:

• Pervious backfill material, if required by the plans, shall be placed as shown. A securely tied sack containing 0.03-m^3 of pervious backfill material shall be placed at each weep hole and drain hole. The sack material shall conform to the provisions in Section 88-1.03, "Filter Fabric."

SECTION 73: CONCRETE CURBS AND SIDEWALKS

Issue Date: January 5, 2007

The second subparagraph of the second paragraph of Section 73-1.01, "Description," of the Standard Specifications is amended to read:

2. Minor concrete shall contain not less than 275 kg of cementitious material per cubic meter except that when extruded or slip-formed curbs are constructed using 9.5-mm maximum size aggregate, minor concrete shall contain not less than 325 kg of cementitious material per cubic meter.

SECTION 75: MISCELLANEOUS METAL

Issue Date: January 4, 2008

The table in the tenth paragraph of Section 75-1.02, "Miscellaneous Iron and Steel," of the Standard Specifications is amended to read:

CONTRACT NO. 04-0120R4

CONTRACT CHANGE ORDER NO 108

SHEET 90 OF 267

Material	Specification
Steel bars, plates and shapes	ASTM Designation: A 36/A 36M or A 575, A 576 (AISI or M Grades 1016 through 1030)
Steel fastener components for general applications:	
Bolts and studs	ASTM Designation: A 307
Headed anchor bolts	ASTM Designation: A 307, Grade B, including S1 supplementary requirements
Nonheaded anchor bolts	ASTM Designation: A 307, Grade C, including S1 supplementary requirements and S1.6 of AASHTO Designation: M 314 supplementary requirements or AASHTO Designation: M 314, Grade 36 or 55, including S1 supplementary requirements
High-strength bolts and studs, threaded rods, and nonheaded anchor bolts	ASTM Designation: A 449, Type 1
Nuts	ASTM Designation: A 563, including Appendix X1*
Washers	ASTM Designation: F 844
Components of high-strength steel fastener assemblies for use in structural steel joints:	
Bolts	ASTM Designation: A 325, Type 1
Tension control bolts	ASTM Designation: F 1852, Type 1
Nuts	ASTM Designation: A 563, including Appendix X1*
Hardened washers	ASTM Designation: F 436, Type 1, Circular, including S1 supplementary requirements
Direct tension indicators	ASTM Designation: F 959, Type 325, zinc-coated
Stainless steel fasteners (Alloys 304 & 316) for general applications:	
Bolts, screws, studs, threaded rods, and nonheaded anchor bolts	ASTM Designation: F 593 or F 738M
Nuts	ASTM Designation: F 594 or F 836M
Washers	ASTM Designation: A 240/A 240M and ANSI B 18.22M
Carbon-steel castings	ASTM Designation: A 27/A 27M, Grade 65-35 [450-240], Class 1
Malleable iron castings	ASTM Designation: A 47, Grade 32510 or A 47M, Grade 22010
Gray iron castings	ASTM Designation: A 48, Class 30B
Ductile iron castings	ASTM Designation: A 536, Grade 65-45-12
Cast iron pipe	Commercial quality
Steel pipe	Commercial quality, welded or extruded
Other parts for general Applications	Commercial quality

* Zinc-coated nuts that will be tightened beyond snug or wrench tight shall be furnished with a dyed dry lubricant conforming to Supplementary Requirement S2 in ASTM Designation: A 563.

The second paragraph in Section 75-1.03, "Miscellaneous Bridge Metal," of the Standard Specifications is amended to read:

CONTRACT NO. 04-0120R4

CONTRACT CHANGE ORDER NO 108

SHEET 91 OF 267

• Miscellaneous bridge metal shall consist of the following, except as further provided in Section 51-1.19, "Utility Facilities," and in the special provisions:

A. Bearing assemblies, equalizing bolts and expansion joint armor in concrete structures.
B. Expansion joint armor in steel structures.
C. Manhole frames and covers, frames and grates, ladder rungs, guard posts and access door assemblies.
D. Deck drains, area drains, retaining wall drains, and drainage piping, except drainage items identified as "Bridge Deck Drainage System" in the special provisions.

The seventh paragraph of Section 75-1.03, "Miscellaneous Bridge Metal," of the Standard Specifications is amended to read:

• Sheet steel for access doors shall be galvanized sheet conforming to the requirements in ASTM Designation: A 653/A 653M, Coating Designation Z600 {G210}.

The 13th paragraph of Section 75-1.03, "Miscellaneous Bridge Metal," of the Standard Specifications is amended to read:

• Concrete anchorage devices shall be mechanical expansion or resin capsule types installed in drilled holes or cast-in-place insert types. The anchorage devices shall be selected from the Department's Pre-Qualified Products List at:

http://www.dot.ca.gov/hq/esc/approved_products_list

• The anchorage devices shall be a complete system, including threaded studs, hex nuts, and cut washers. Thread dimensions for externally threaded concrete anchorage devices prior to zinc coating, shall conform to the requirements in ANSI Standard: B1.1 having Class 2A tolerances or ANSI Standard: B1.13M having Grade 6g tolerances. Thread dimensions for internally threaded concrete anchorage devices shall conform to the requirements in ASTM A 563.

The 18th paragraph of Section 75-1.03, "Miscellaneous Bridge Metal," of the Standard Specifications is amended to read:

• Mechanical expansion anchors shall, when installed in accordance with the manufacturer's instructions and these specifications and tested in conformance with the requirements in California Test 681, withstand the application of a sustained tension test load of at least the following values for at least 48 hours with a movement not greater than 0.90 mm:

CONTRACT NO. 04-012024

CONTRACT CHANGE ORDER NO 108

SHEET 92 OF 267

Stud Diameter (millimeters)	Sustained Tension Test Load (kilonewtons)
29.01-33.00	137.9
23.01-29.00	79.6
21.01-23.00	64.1
*18.01-21.00	22.2
15.01-18.00	18.2
12.01-15.00	14.2
9.01-12.00	9.34
6.00-9.00	4.23

* Maximum stud diameter permitted for mechanical expansion anchors.

• Resin capsule anchors shall, when installed in accordance with the manufacturer's instructions and these specifications and tested in conformance with the requirements in California Test 681, withstand the application of a sustained tension test load of at least the following values for at least 48 hours with a movement not greater than 0.25 mm:

Stud Diameter (millimeters)	Sustained Tension Test Load (kilonewtons)
29.01-33.00	137.9
23.01-29.00	79.6
21.01-23.00	64.1
*18.01-21.00	22.2
15.01-18.00	18.2
12.01-15.00	14.2
9.01-12.00	9.34
6.00-9.00	4.23

* Maximum stud diameter permitted for mechanical expansion anchors.

• At least 25 days before use, the Contractor shall submit one sample of each resin capsule anchor per lot to the Transportation Laboratory for testing. A lot of resin capsule anchors is 100 units, or fraction thereof, of the same brand and product name.

The table in the nineteenth paragraph of Section 75-1.03, "Miscellaneous Bridge Metal," of the Standard Specifications is amended to read:

CONTRACT NO. 04-0120R4

CONTRACT CHANGE ORDER NO 108

SHEET 93 OF 267

Stud Diameter (millimeters)	Ultimate Tensile Load (kilonewtons)
30.01-33.00	112.1
27.01-30.00	88.1
23.01-27.00	71.2
20.01-23.00	51.6
16.01-20.00	32.0
14.01-16.00	29.4
12.00-14.00	18.7

The 20th paragraph of Section 75-1.03, "Miscellaneous Bridge Metal," of the Standard Specifications is amended to read:

• The Pre-Qualified Products List for concrete anchorage devices has been developed from data previously furnished by suppliers or manufacturers for each type and size. Approval of additional anchorage device types and sizes is contingent upon the Contractor submitting to the Engineer one sample of each type of concrete anchorage device, manufacturer's installation instructions, and certified results of tests, either by a private testing laboratory or the manufacturer, indicating compliance with the above requirements.

The table in the twenty-second paragraph of Section 75-1.03, "Miscellaneous Bridge Metal," of the Standard Specifications is amended to read:

Installation Torque Values, (newton meters)

Stud Diameter (millimeters)	Shell Type Mechanical Expansion Anchors	Integral Stud Type Mechanical Expansion Anchors	Resin Capsule Anchors and Cast-in-Place Inserts
29.01-33.00	—	—	540
23.01-29.00	—	—	315
21.01-23.00	—	—	235
18.01-21.00	110	235	200
15.01-18.00	45	120	100
12.01-15.00	30	65	40
9.01-12.00	15	35	24
6.00-9.00	5	10	—

The twenty-fourth paragraph of Section 75-1.03, "Miscellaneous Bridge Metal," of the Standard Specifications is amended to read:

• Sealing compound, for caulking and adhesive sealing, shall be a polysulfide or polyurethane material conforming to the requirements in ASTM Designation: C 920, Type S, Grade NS, Class 25, Use O.

The third paragraph in Section 75-1.035, "Bridge Joint Restrainer Units," of the Standard Specifications is amended to read:

• Cables shall be 19 mm preformed, 6 x 19, wire strand core or independent wire rope core (IWRC), galvanized in conformance with the requirements in Federal Specification RR-W-410, right regular lay, manufactured of improved plow steel with a minimum breaking strength of

CONTRACT NO. 04-0120R4

CONTRACT CHANGE ORDER NO 106

SHEET 94 OF 267

200 kN. Two certified copies of mill test reports of each manufactured length of cable used shall be furnished to the Engineer.

The twelfth paragraph in Section 75-1.035, "Bridge Joint Restrainer Units," of the Standard Specifications is amended to read:

• Concrete for filling cable drum units shall conform to the provisions in Section 90-10, "Minor Concrete," or at the option of the Contractor, may be a mix with 9.5 mm maximum size aggregate and not less than 400 kilograms of cementitious material per cubic meter.

The second paragraph in Section 75-1.05, "Galvanizing," of the Standard Specifications is amended to read:

• At the option of the Contractor, material thinner than 3.2 mm shall be galvanized either before fabrication in conformance with the requirements of ASTM Designation: A 653/A 653M, Coating Designation Z600, or after fabrication in conformance with the requirements of ASTM Designation: A 123, except that the weight of zinc coating shall average not less than 365 g per square meter of actual surface area with no individual specimen having a coating weight of less than 305 g per square meter.

SECTION 80: FENCES

Issue Date: January 5, 2007

The second paragraph of Section 80-3.01B(2), "Treated Wood Posts and Braces," of the Standard Specifications is amended to read:

• Posts and braces to be treated shall be pressure treated in conformance with the provisions in Section 58, "Preservative Treatment of Lumber, Timber and Piling," and AWPA Use Category System: UC4A, Commodity Specification A or B.

The fourth paragraph of Section 80-3.01F, "Miscellaneous," of the Standard Specifications is amended to read:

• Portland cement concrete for metal post and brace footings and for deadmen shall be minor concrete conforming to the provisions in Section 90-10, "Minor Concrete." Minor concrete shall contain not less than 275 kg of cementitious material per cubic meter.

The fourth paragraph of Section 80-4.01C, "Miscellaneous," of the Standard Specifications is amended to read:

• Portland cement concrete for metal post and for deadmen shall be produced from minor concrete conforming to the provisions in Section 90-10, "Minor Concrete." Minor concrete shall contain not less than 275 kg of cementitious material per cubic meter.

SECTION 81: MONUMENTS

CONTRACT NO. 64-0120R4

CONTRACT CHANGE ORDER NO 108

SHEET 95 OF 267

Issue Date: June 30, 2006

The fifth paragraph of Section 81-1.02, "Materials," of the Standard Specifications is amended to read:

• At the option of the Contractor, the frame and cover for Type B and Type D survey monuments shall be fabricated from either cast steel or gray cast iron. The covers shall fit into the frames without rocking.

The seventh paragraph of Section 81-1.02, "Materials," of the Standard Specifications is amended to read:

• Granular material for Type B and Type D survey monuments shall be gravel, crushed gravel, crushed rock or any combination thereof. Granular material shall not exceed 37.5 mm in greatest dimension.

SECTION 82: MARKERS AND DELINEATORS

Issue Date: June 30, 2006

The first paragraph of Section 82-1.02B, "Metal Posts," of the Standard Specifications is amended to read:

• Steel for metal posts shall conform to the requirements in ASTM Designation: A 36/A 36M. The posts shall be galvanized in conformance with the requirements in Section 75-1.05, "Galvanizing."

The third paragraph of Section 82-1.02D, "Target Plates," of the Standard Specifications is amended to read:

• The zinc-coated steel sheet shall conform to the requirements in ASTM Designation: A 653/A 653M, Classification: Commercial Steel (CS Types A, B and C). The steel sheets shall be galvanized in conformance with the requirements in Section 75-1.05, "Galvanizing." The zinc-coated surface shall be prepared for painting in a manner designed to produce optimum paint adherence. The surface preparation shall be accomplished without damaging or removing the zinc coating. Any evidence of damage or removal of the zinc coating shall be cause for rejection of the entire lot.

The eleventh paragraph of Section 82-1.02D, "Target Plates," of the Standard Specifications is amended to read:

• When tested in conformance with the requirements in California Test 671, the painted metal target plates shall, in general, have satisfactory resistance to weathering, humidity, salt spray and chemicals; the enamel coating shall have satisfactory adherence and impact resistance, a pencil lead hardness of HB minimum, 60° specular gloss of 80 percent minimum, an excitation purity of 3 percent maximum as received and after 1000 hours in an artificial weathering device in conformance with the requirements in ASTM Designation: G 155, Table X3.1, Cycle 1, and a daylight luminous directional reflectance ("Y" value) of 70 minimum.

The second paragraph of Section 82-1.02F, "Reflectors," of the Standard Specifications is amended to read:

• Reflectors for flexible target plates on Type K object markers and target plates on Class 2 delineators, and reflectors for Class 1 delineators shall be made from impact resistant retroreflective sheeting as specified in the special provisions. The color of the retroreflective sheeting shall conform to the color designated on the plans and the Chromaticity Coordinates specified in ASTM Designation: D 4956, or the PR color number specified by the Federal Highway Administration's Color Tolerance Chart.

The fourth paragraph of Section 82-1.02F, "Reflectors," of the Standard Specifications is amended to read:

The instrumental method of determining color shall conform to the requirements specified in ASTM Designation: D 4956. In the event of any dispute concerning the test results of instrumental testing, the visual test shall prevail.

SECTION 83: RAILINGS AND BARRIERS

Issue Date: August 17, 2007

The seventh paragraph in Section 83-1.02, "Materials and Construction," of the Standard Specifications is amended to read:

• Mortar shall conform to the provisions in Section 51-1.135, "Mortar," and shall consist of one part by volume of cementitious material and 3 parts of clean sand.

The first paragraph of Section 83-1.02B, "Metal Beam Guard Railing," of the Standard Specifications is amended to read:

• The rail elements, backup plates, terminal sections, end and return caps, bolts, nuts and other fittings shall conform to the requirements in AASHTO Designation: M 180, except as modified in this Section 83-1.02B and as specified in Section 83-1.02. The rail elements, backup plates, terminal sections, end and return caps shall conform to Class A, Type 1 W-Beam guard railing as shown in AASHTO Designation: M 180. The edges and center of the rail element shall contact each post block. Rail element joints shall be lapped not less than 316 mm and bolted. The rail metal, in addition to conforming to the requirements in AASHTO Designation: M 180, shall withstand a cold bend, without cracking, of 180 degrees around a mandrel of a diameter equal to 2.5 times the thickness of the plate.

The ninth paragraph in Section 83-1.02B, "Metal Beam Guard Railing," of the Standard Specifications is amended to read:

• The grades and species of wood posts and blocks shall be No. 1 timbers (also known as No. 1 structural) Douglas fir or No. 1 timbers Southern yellow pine. Wood posts and blocks shall be graded in conformance with the provisions in Section 57-2, "Structural Timber," of the

CONTRACT NO. 04-012024

CONTRACT CHANGE ORDER NO 108

SHEET 97 OF 267

Standard Specifications, except allowances for shrinkage after mill cutting shall in no case exceed 5 percent of the American Lumber Standards minimum sizes, at the time of installation.

The eleventh paragraph in Section 83-1.02B, "Metal Beam Guard Railing," of the Standard Specifications is amended to read:

• After fabrication, wood posts and blocks shall be pressure treated in conformance with Section 58, "Preservative Treatment of Lumber, Timber and Piling," and AWPA Use Category System: UC4A, Commodity Specification A.

The twelfth paragraph in Section 83-1.02B, "Metal Beam Guard Railing," of the Standard Specifications is amended to read:

• If copper naphthenate, ammoniacal copper arsenate, chromated copper arsenate, ammoniacal copper zinc arsenate, ammoniacal copper quat or copper azole is used to treat the wood posts and blocks, the bolt holes shall be treated as follows:

A. Before the bolts are inserted, bolt holes shall be filled with a grease, recommended by the manufacturer for corrosion protection, which will not melt or run at a temperature of 65°C.

The 24th paragraph of Section 83-1.02B, "Metal Beam Guard Railing," of the Standard Specifications is amended to read:

• End anchor assemblies and rail tensioning assemblies for metal beam guard railing shall be constructed as shown on the plans and shall conform to the following provisions:

1. An end anchor assembly (Type SFT) for metal beam guard railing shall consist of an anchor cable, an anchor plate, a wood post, a steel foundation tube, a steel soil plate and hardware.
2. An end anchor assembly (Type CA) for metal beam guard railing shall consist of an anchor cable, an anchor plate, a single anchor rod or double anchor rods, hardware and one concrete anchor.
3. A rail tensioning assembly for metal beam guard railing shall consist of an anchor cable, an anchor plate, and hardware.
4. The anchor plate, metal plates, steel foundation tubes and steel soil plate shall be fabricated of steel conforming to the requirements in ASTM Designation: A 36/A 36M.
5. The anchor rods shall be fabricated of steel conforming to the requirements in ASTM Designation: A 36/A 36M, A 441 or A 572, or ASTM Designation: A 576, Grades 1018, 1019, 1021 or 1026. The eyes shall be hot forged or formed with full penetration welds. After fabrication, anchor rods with eyes that have been formed with any part of the eye below 870°C during the forming operation or with eyes that have been closed by welding shall be thermally stress relieved prior to galvanizing. The completed anchor rod, after galvanizing, shall develop a strength of 220 kN.
6. In lieu of built-up fabrication of anchor plates as shown on the plans, anchor plates may be press-formed from steel plate, with or without welded seams.
7. All bolts and nuts shall conform to the requirements in ASTM Designation: A 307, unless otherwise specified in the special provisions or shown on the plans.

CONTRACT NO. 04-012024

CONTRACT CHANGE ORDER NO 108

SHEET 96 OF 267

8. Anchor cable shall be 19 mm preformed, 6 x 19, wire strand core or independent wire rope core (IWRC), galvanized in conformance with the requirements in Federal Specification RR-W-410, right regular lay, manufactured of improved plow steel with a minimum breaking strength of 200 kN. Two certified copies of mill test reports of each manufactured length of cable used shall be furnished to the Engineer. The overall length of each cable anchor assembly shall be as shown on the plans, but shall be a minimum of 2 m.
9. Where shown on the plans, cable clips and a cable thimble shall be used to attach cable to the anchor rod. Thimbles shall be commercial quality, galvanized steel. Cable clips shall be commercial quality drop forged galvanized steel.
10. The swaged fitting shall be machined from hot-rolled bars of steel conforming to AISI Designation: C 1035, and shall be annealed suitable for cold swaging. The swaged fitting shall be galvanized before swaging. A lock pin hole to accommodate a 6 mm, plated, spring steel pin shall be drilled through the head of the swage fitting to retain the stud in proper position. The manufacturer's identifying mark shall be stamped on the body of the swage fitting.
11. The 25 mm nominal diameter stud shall conform to the requirements in ASTM Designation: A 449 after galvanizing. Prior to galvanizing, a 10 mm slot for the locking pin shall be milled in the stud end.
12. The swaged fittings, stud and nut assembly shall develop the specified breaking strength of the cable.
13. The cable assemblies shall be shipped as a complete unit including stud and nut.
14. Clevises shall be drop forged galvanized steel and shall develop the specified breaking strength of the cable.
15. One sample of cable properly fitted with swaged fitting and right hand thread stud at both ends as specified above, including a clevis when shown on the plans, one meter in total length, shall be furnished the Engineer for testing.
16. The portion of the anchor rod to be buried in earth shall be coated with a minimum 0.5 mm thickness of coal tar enamel conforming to AWWA Standard: C203 or a coal tar epoxy conforming to the requirements in Steel Structures Painting Council Paint Specification No. 16, Coal-Tar Epoxy-Polymide Black Paint or Corps of Engineers Specification, Formula C-200a, Coal-Tar Epoxy Paint.
17. Metal components of the anchor assembly shall be fabricated in conformance with good shop practice and shall be hot-dip galvanized in conformance with the provisions in Section 75-1.05, "Galvanizing."
18. Anchor cables shall be tightened after the concrete anchor has cured for at least 5 days.
19. Concrete used to construct anchors for end anchor assemblies shall be Class 3 or minor concrete conforming to the provisions in Section 90, "Portland Cement Concrete."
20. Concrete shall be placed against undisturbed material of the excavated holes for end anchors. The top 300 mm of holes shall be formed, if required by the Engineer.
21. Reinforcing steel in concrete anchors for end anchor assemblies shall conform to the provisions in Section 52, "Reinforcement."

The second paragraph in Section 83-1.02D, "Steel Bridge Railing," of the Standard Specifications is amended to read:

CONTRACT NO. 04-012024

CONTRACT CHANGE ORDER NO 108

SHEET 99 OF 267

• Structural shapes, tubing, plates, bars, bolts, nuts, and washers shall be structural steel conforming to the provisions in Section 55-2, "Materials." Other fittings shall be commercial quality.

The second and third paragraphs in Section 83-1.02E, "Cable Railing," of the Standard Specifications are replaced with the following paragraph:

• Pipe for posts and braces shall be standard steel pipe or pipe that conforms to the provisions in Section 80-4.01A, "Posts and Braces."

The 2nd sentence of the 7th paragraph of Section 83-1.02E, "Cable Railing," of the Standard Specifications is amended to read:

Cable shall be galvanized in conformance with the requirements in Federal Specification RR-W-410.

The 5th paragraph of Section 83-1.02I, "Chain Link Railing." of the Standard Specifications is amended to read:

Where shown on the plans, cables used in the frame shall be 8 mm in diameter, wire rope, with a minimum breaking strength of 22 kN and shall be galvanized in conformance with the requirements in Federal Specification RR-W-410.

The 14th paragraph of Section 83-1.02I, "Chain Link Railing," of the Standard Specifications is amended to read:

Chain link fabric shall be either 11-gage Type I zinc-coated fabric conforming to the requirements in AASHTO M 181 or 11-gage Type IV polyvinyl chloride (PVC) coated fabric conforming to the requirements in Federal Specification RR-F-191/1.

The second paragraph of Section 83-1.03, "Measurement," of the Standard Specifications is amended to read:

• Except for metal beam guard railing within the pay limits of a terminal system end treatment or transition railing (Type WB), metal beam guard railing will be measured by the meter along the face of the rail element from end post to end post of the completed railing at each installation. The point of measurement at each end post will be the center of the bolt attaching the rail element to the end post.

The seventh paragraph of Section 83-1.03, "Measurement," of the Standard Specifications is amended to read:

• The quantities of end anchor assemblies (Type SFT or Type CA) and rail tensioning assemblies will be measured as units determined from actual count. An end anchor assembly (Type CA) with 2 cables attached to one concrete anchor will be counted as one terminal anchor assembly (Type CA) for measurement and payment.

The eighth paragraph of Section 83-1.03, "Measurement," of the Standard Specifications is amended to read:

• The quantities of return and end caps and the various types of terminal sections for metal beam guard railing will be determined as units from actual count.

The third paragraph of Section 83-1.04, "Payment," of the Standard Specifications is amended to read:

• The contract unit prices paid for end anchor assembly (Type SFT), end anchor assembly (Type CA), and rail tensioning assembly shall include full compensation for furnishing all labor, materials, tools, equipment, and incidentals, and for doing all work involved in constructing the end anchor assemblies, complete in place, including drilling anchor plate bolt holes in rail elements, driving steel foundation tubes, excavating for concrete anchor holes and disposing of surplus material, as shown on the plans, as specified in these specifications and the special provisions, and as directed by the Engineer.

The fourth paragraph of Section 83-1.04, "Payment," of the Standard Specifications is amended to read:

• The contract unit prices paid for return caps, end caps, and the various types of terminal sections for metal beam guard railing shall include full compensation for furnishing all labor, materials, tools, equipment, and incidentals, and for doing all the work involved in installing terminal sections, return and end caps, complete in place, as shown on the plans, as specified in these specifications and the special provisions, and as directed by the Engineer.

The second paragraph of Section 83-2.02B, "Thrie Beam Barrier," of the Standard Specifications is amended to read:

• Rail elements, backup plates, terminal connectors, terminal sections, and return caps shall conform to Class A, Type 1 thrie beam guard railing as shown in AASHTO Designation: M 180.

The fourteenth paragraph of Section 83-2.02B, "Thrie Beam Barrier," of the Standard Specifications is amended to read:

• All metal work shall be fabricated in the shop, and no punching, cutting or welding will be permitted in the field. Rail elements shall be lapped so that the exposed ends will not face approaching traffic. Terminal sections and return caps shall be installed in conformance with the manufacturer's recommendation.

The first paragraph in Section 83-2.02D(2), "Materials," of the Standard Specifications is amended to read:

• Type 50 and 60 series concrete barriers shall be constructed of minor concrete conforming to the provisions in Section 90-10, "Minor Concrete," except as follows:

CONTRACT NO. 04-012024

CONTRACT CHANGE ORDER NO 108

SHEET 101 OF 267

a. The maximum size of aggregate used for extruded or slip-formed concrete barriers shall be at the option of the Contractor, but in no case shall the maximum size be larger than 37.5-mm or smaller than 9.5-mm.
b. If the 9.5 mm maximum size aggregate grading is used to construct extruded or slip-formed concrete barriers, the cementitious material content of the minor concrete shall be not less than 400 kilograms per cubic meter.

The third paragraph in Section 83-2.02D(2), "Materials," of the Standard Specifications is amended to read:

• The concrete paving between the tops of the 2 walls of concrete barrier (Types 50E, 60E, 60GE, and 60SE) and the optional concrete slab at the base between the 2 walls of concrete barrier (Types 50E, 60E, 60GE, and 60SE) shall be constructed of minor concrete conforming to the provisions of Section 90-10, "Minor Concrete," except that the minor concrete shall contain not less than 300 kilograms of cementitious material per cubic meter.

The first paragraph of Section 83-2.03, "Measurement," of the Standard Specifications is amended to read:

• Except for single thrie beam barrier within the pay limits of transition railing (Type STB), single thrie beam barrier will be measured by the meter from end post to end post along the face of the rail element of the installed barrier. Single thrie beam barriers constructed on each side of piers under structures or other obstructions will be measured for payment along each line of the installed barrier.

The second paragraph of Section 83-2.03, "Measurement," of the Standard Specifications is amended to read:

• Except for double thrie beam barrier within the pay limits of transition railing (Type DTB), double thrie beam barrier will be measured by the meter from end post to end post along the center line of the installed barrier.

The fifth paragraph of Section 83-2.03, "Measurement," of the Standard Specifications is amended to read:

• The quantity of return caps, terminal connectors and the various types of terminal sections for single and double thrie beam barriers will be determined as units from actual count.

The sixth paragraph of Section 83-2.03, "Measurement," of the Standard Specifications is amended to read:

• The quantity of end anchor assemblies will be paid for as units determined from actual count.

The first paragraph of Section 83-2.04, "Payment," of the Standard Specifications is amended to read:

• The various types of thrie beam barrier, measured as specified in Section 83-2.03, "Measurement," will be paid for at the contract price per meter for single or double thrie beam barrier, whichever applies, and the contract unit price or prices for end anchor assemblies, return caps, terminal connectors and the various types of terminal sections.

The second paragraph of Section 83-2.04, "Payment," of the Standard Specifications is amended to read:

• The above prices and payments shall include full compensation for furnishing all labor, materials, tools, equipment and incidentals, and for doing all the work involved in constructing the barrier, complete in place, including drilling holes for wood posts, driving posts, backfilling the space around posts, excavating and backfilling end anchor assembly holes, connecting thrie beam barrier to concrete surfaces and disposing of surplus excavated material, and for furnishing, placing, removing and disposing of the temporary railing for closing the gap between existing barrier and the barrier being constructed as shown on the plans, and as specified in these specifications and the special provisions, and as directed by the Engineer.

The fourth paragraph in Section 83-2.04, "Payments," of the Standard Specifications is amended to read:

• Steel plate barrier attached to concrete barrier at overhead sign foundations, electroliers, drainage structures, and other locations shown on the plans will be measured and paid for as the type of concrete barrier attached thereto.

SECTION 84: TRAFFIC STRIPES AND PAVEMENT MARKINGS

Issue Date: July 21, 2006

The first paragraph of Section 84-2.02, "Materials," of the Standard Specifications is amended to read:

• The thermoplastic material shall conform to State Specification PTH-02SPRAY, PTH-02HYDRO or PTH-02ALKYD. Glass beads to be applied to the surface of the molten thermoplastic material shall conform to the requirements of State Specification 8010-004 (Type II).

The first paragraph of Section 84-3.02, "Materials," of the Standard Specifications is amended to read:

• Paint for traffic stripes and pavement markings shall conform to the following State Specifications:

CONTRACT NO. 04-0120R4

CONTRACT CHANGE ORDER NO 105

SHEET 103 OF 267

Paint Type	Color	State Specification No.
Waterborne Traffic Line	White, Yellow and Black	PTWB-01
Acetone-Based	White, Yellow and Black	PT-150VOC(A)
Waterborne Traffic Line for disabled persons' parking, and other curb markings	Blue, Red and Green	Federal Specification No. TT-P-1952D

The fourth paragraph of Section 84-3.02, "Materials," of the Standard Specifications is amended to read:

- The kind of paint to be used (waterborne or acetone-based) shall be determined by the Contractor based on the time of year the paint is applied and local air pollution control regulations.

The first paragraph of Section 84-3.05, "Application," of the Standard Specifications is amended to read:

Traffic stripes and pavement markings shall be applied only on dry surfaces and only during periods of favorable weather. Painting shall not be performed when the atmospheric temperature is below 5°C when using acetone-based paint or below 10°C when using water borne paint; when freshly painted surfaces may become damaged by rain, fog, or condensation; nor when it can be anticipated that the atmospheric temperature will drop below the aforementioned 5°C or 10°C temperatures during the drying period.

The third paragraph of Section 84-3.05, "Application," of the Standard Specifications is deleted.

The tenth paragraph of Section 84-3.05, "Application," of the Standard Specifications is amended to read:

- Paint to be applied in 2 coats shall be applied approximately as follows:

Paint Type	Square Meter Coverage Per Liter	
	First Coat	Second Coat
Waterborne Paint	6	6
Acetone-Based Paint	10	5

SECTION 85: PAVEMENT MARKERS

Issue Date: August 17, 2007

The second through fifth paragraphs in Section 85-1.03, "Sampling, Tolerances and Packaging," of the Standard Specifications are amended to read:

CONTRACT NO. 04-012024

CONTRACT CHANGE ORDER NO 108

SHEET 164 OF 267

Sampling

- Twenty markers selected at random will constitute a representative sample for each lot of markers.
- The lot size shall not exceed 25 000 markers.

Tolerances

- Three test specimens will be randomly selected from the sample for each test and tested in conformance with these specifications. Should any one of the 3 specimens fail to conform with the requirements in these specifications, 6 additional specimens will be tested. The failure of any one of these 6 specimens shall be cause for rejection of the entire lot or shipment represented by the sample.
- The entire sample of retroreflective pavement markers will be tested for reflectance. The failure of 10 percent or more of the original sampling shall be cause for rejection.

Section 85-1.04, "Non-Reflective Pavement Markers," of the Standard Specifications is amended to read:

85-1.04 Non-Reflective Pavement Markers

- Non-reflective pavement markers (Types A and AY) shall be, at the option of the Contractor, either ceramic or plastic conforming to these specifications.
- The top surface of the marker shall be convex with a gradual change in curvature. The top, bottom and sides shall be free of objectionable marks or discoloration that will affect adhesion or appearance.
- The bottom of markers shall have areas of integrally formed protrusions or indentations, which will increase the effective bonding surface area of adhesive. The bottom surface of the marker shall not deviate more than 1.5 mm from a flat surface. The areas of protrusion shall have faces parallel to the bottom of the marker and shall project approximately one mm from the bottom.

The second through fourth paragraphs of Section 85-1.04A, "Non-Reflective Pavement Markers (Ceramic)," of the Standard Specifications are deleted.

The table in the fifth paragraph in Section 85-1.04A, "Non-Reflective Pavement Markers (Ceramic)," of the Standard Specifications is amended to read:

Testing

- Tests shall be performed in conformance with the requirements in California Test 669.

CONTRACT NO. 04-012024

CONTRACT CHANGE ORDER NO 106

SHEET 105 OF 267

Test	Test Description	Requirement
a	Bond strength	4.8 MPa, min.
b	Glaze thickness	180 µm, min.
c	Hardness	6 Moh, min.
d	Luminance factor, Type A, white markers only, glazed surface	75, min.
e	Yellowness index, Type A, white markers only, glazed surface	7, max.
f	Color-yellow, Type AY, yellow markers only. The chromaticity coordinates shall be within a color box defined in CTM 669	Pass
g	Compressive strength	6700 N, min.
h	Water absorption	2.0 %, max.
i	Artificial weathering, 500 hours exposure, yellowness index	20, max.

Section 85-1.04B, "Non-Reflective Pavement Markers (Plastic)," of the Standard Specifications is amended to read:

85-1.04B Non-Reflective Pavement Markers (Plastic)

- Plastic non-reflective pavement markers Types A and AY shall be, at the option of the Contractor, either polypropylene or acrylonitrile-butadiene-styrene (ABS) plastic type.
- Plastic markers shall conform to the testing requirements specified in Section 85-1.04A, "Non-Reflective Pavement Markers (Ceramic)," except that Tests a, b, c, and h shall not apply. The plastic markers shall not be coated with substances that interfere with the ability of the adhesive bonding to the marker.

The sixth and seventh paragraphs in Section 85-1.05, "Retroreflective Pavement Markers," of the Standard Specifications are amended to read:

Testing

- Tests shall be performed in conformance with the requirements in California Test 669.

CONTRACT NO. 04-0120R4

CONTRACT CHANGE ORDER NO 108

SHEET 106 OF 267

Test Description	Requirement		
Bond strength[a]	3.4 MPa, min.		
Compressive strength[b]	8900 N, min.		
Abrasion resistance, marker must meet the respective specific intensity minimum requirements after abrasion.	Pass		
Water Soak Resistance	No delamination of the body or lens system of the marker nor loss of reflectance		
	Specific Intensity		
Reflectance	Clear	Yellow	Red
0° Incidence Angle, min.	3.0	1.5	0.75
20° Incidence Angle, min.	1.2	0.60	0.30
After one year field evaluation	0.30	0.15	0.08

a. Failure of the marker body or filler material prior to reaching 3.4 MPa shall constitute a failing bond strength test.

b. Deformation of the marker of more than 3 mm at a load of less than 8900 N or delamination of the shell and the filler material of more than 3 mm regardless of the load required to break the marker shall be cause for rejection of the markers as specified in Section 85-1.03, "Sampling, Tolerances and Packaging."

• Pavement markers to be placed in pavement recesses shall conform to the above requirements for retroreflective pavement markers except that the minimum compressive strength requirement shall be 5338 N.

The eighth paragraph of Section 85-1.05, "Retroreflective Pavement Markers," of the Standard Specifications is deleted.

The eighth paragraph in Section 85-1.06, "Placement," of the Standard Specifications is amended to read:

• Epoxy adhesive shall not be used to apply non-reflective plastic pavement markers.

The seventh sentence of the fourteenth paragraph of Section 85-1.06, "Placement," of the Standard Specifications is amended to read:

• Soft rags moistened with mineral spirits conforming to Army Mil-PRF-680A(1) or kerosene may be used, if necessary, to remove adhesive from exposed faces of pavement markers.

SECTION 86: SIGNALS, LIGHTING AND ELECTRICAL SYSTEMS

Issue Date: January 5, 2007

The second paragraph of Section 86-1.01, "Description," of the Standard Specifications is amended to read:

CONTRACT NO. 04-012024

CONTRACT CHANGE ORDER NO 1086

SHEET 107 OF 267

• The locations of signals, beacons, standards, lighting fixtures, signs, controls, services and appurtenances shown on the plans are approximate and the exact locations will be approved by the Engineer in the field.

The tenth paragraph of Section 86-1.06, "Maintaining Existing and Temporary Electrical Systems," of the Standard Specifications is amended to read:

• These provisions will not relieve the Contractor in any manner of the Contractor's responsibilities as provided in Section 7-1.12, "Indemnification and Insurance," and Section 7-1.16, "Contractor's Responsibility for the Work and Materials."

The first paragraph of Section 86-2.03, "Foundations," of the Standard Specifications is amended to read:

• Except for concrete for cast-in-drilled-hole concrete pile foundations, portland cement concrete shall conform to Section 90-10, "Minor Concrete."

The fourth paragraph in Section 86-2.03, "Foundations," of the Standard Specifications is amended to read:

• After each post, standard, and pedestal on structures is in proper position, mortar shall be placed under the base plate as shown on the plans. The exposed portions shall be formed to present a neat appearance. Mortar shall conform to Section 51-1.135, "Mortar," except the mortar shall consist of one part by volume of cementitious material and 3 parts of clean sand and shall contain only sufficient moisture to permit packing. Mortar shall be cured by keeping it damp for 3 days.

The fifth paragraph of Section 86-2.03, "Foundations," of the Standard Specifications is amended to read:

• Reinforced cast-in-drilled-hole concrete pile foundations for traffic signal and lighting standards shall conform to the provisions in Section 49, "Piling," with the following exceptions: 1) Material resulting from drilling holes shall be disposed of in conformance with the provisions in Section 86-2.01, "Excavating and Backfilling," and 2) Concrete filling for cast-in-drilled-hole concrete piles will not be considered as designated by compressive strength.

The seventh paragraph of Section 86-2.03, "Foundations," of the Standard Specifications is amended to read:

• Forms shall be true to line and grade. Tops of foundations for posts and standards, except special foundations, shall be finished to curb or sidewalk grade or as directed by the Engineer. Forms shall be rigid and securely braced in place. Conduit ends and anchor bolts shall be placed in proper position and to proper height, and anchor bolts shall be held in place by means of rigid top and bottom templates. The bottom template shall be made of steel. The bottom template shall provide proper spacing and alignment of the anchor bolts near their bottom embedded end. The bottom template shall be installed before placing footing concrete. Anchor bolts shall not be installed more than 1:40 from vertical.

CONTRACT NO. 04-012024

CONTRACT CHANGE ORDER NO 108

SHEET 106 OF 267

Section 86-2.03, "Foundations," of the Standard Specifications is amended by deleting the eighth paragraph.

The twelfth paragraph of Section 86-2.03, "Foundations," of the Standard Specifications is amended to read:

• Plumbing of the standards shall be accomplished by adjusting the leveling nuts before placing the mortar or before the foundation is finished to final grade. Shims or other similar devices shall not be used for plumbing or raking of posts, standards, or pedestals. After final adjustments of both top nuts and leveling nuts on anchorage assemblies have been made, firm contact shall exist between all bearing surfaces of the anchor bolt nuts, washers, and the base plates.

The first paragraph of Section 86-2.04, "Standards, Steel Pedestals and Posts," of the Standard Specifications is amended to read:

• Bolts, nuts and washers, and anchor bolts for use in signal and lighting support structures shall conform to the provisions in Section 55-2, "Materials." Except when bearing-type connections or slipbases are specified, high-strength bolted connections shall conform to the provisions in Section 55-3.14, "Bolted Connections." Welding, nondestructive testing (NDT) of welds, and acceptance and repair criteria for NDT of steel members shall conform to the requirements of AWS D1.1 and the special provisions.

The second paragraph of Section 86-2.04, "Standards, Steel Pedestals and Posts," of the Standard Specifications is amended to read:

• On each lighting standard except Type 1, one rectangular corrosion resistant metal identification tag shall be permanently attached above the hand hole, near the base of the standard, using stainless steel rivets. On each signal pole support, two corrosion resistant metal identification tags shall be attached, one above the hand hole near the base of the vertical standard and one on the underside of the signal mast arm near the arm plate. As a minimum, the information on each identification tag shall include the name of the manufacturer, the date of manufacture, the identification number as shown on the plans, the contract number, and a unique identification code assigned by the fabricator. This number shall be traceable to a particular contract and the welds on that component, and shall be readable after the support structure is coated and installed. The lettering shall be a minimum of 7 mm high. The information may be either depressed or raised, and shall be legible.

The fourth paragraph of Section 86-2.04, "Standards, Steel Pedestals and Posts," of the Standard Specifications is amended to read:

• Ferrous metal parts of standards, with shaft length of 4.6 m and longer, shall conform to the details shown on the plans, the provisions in Section 55-2, "Materials," except as otherwise noted, and the following requirements:

A. Except as otherwise specified, standards shall be fabricated from sheet steel of weldable grade having a minimum yield strength, after fabrication, of 276 MPa.

B. Certified test reports which verify conformance to the minimum yield strength requirements shall be submitted to the Engineer. The test reports may be the mill test reports for the as-received steel or, when the as-received steel has a lower yield strength than required, the Contractor shall provide supportive test data which provides assurance that the Contractor's method of cold forming will consistently increase the tensile properties of the steel to meet the specified minimum yield strength. The supportive test data shall include tensile properties of the steel after cold forming for specific heats and thicknesses.

C. When a single-ply 8-mm thick pole is specified, a 2-ply pole with equivalent section modulus may be substituted.

D. Standards may be fabricated of full-length sheets or shorter sections. Each section shall be fabricated from not more than 2 pieces of sheet steel. Where 2 pieces are used, the longitudinal welded seams shall be directly opposite one another. When the sections are butt-welded together, the longitudinal welded seams on adjacent sections shall be placed to form continuous straight seams from base to top of standard.

E. Butt-welded circumferential joints of tubular sections requiring CJP groove welds shall be made using a metal sleeve backing ring inside each joint. The sleeve shall be 3-mm nominal thickness, or thicker, and manufactured from steel having the same chemical composition as the steel in the tubular sections to be joined. When the sections to be joined have different specified minimum yield strengths, the steel in the sleeve shall have the same chemical composition as the tubular section having the higher minimum yield strength. The width of the metal sleeve shall be consistent with the type of NDT chosen and shall be a minimum width of 25 mm. The sleeve shall be centered at the joint and be in contact with the tubular section at the point of the weld at time of fit-up.

F. Welds shall be continuous.

G. The weld metal at the transverse joint shall extend to the sleeve, making the sleeve an integral part of the joint.

H. During fabrication, longitudinal seams on vertical tubular members of cantilevered support structures shall be centered on and along the side of the pole that the pole plate is located. Longitudinal seams on horizontal tubular members, including signal and luminaire arms, shall be within +/-45 degrees of the bottom of the arm.

I. The longitudinal seam welds in steel tubular sections may be made by the electric resistance welding process.

J. Longitudinal seam welds shall have 60 percent minimum penetration, except that within 150 mm of circumferential welds, longitudinal seam welds shall be CJP groove welds. In addition, longitudinal seam welds on lighting support structures having telescopic pole segment splices shall be CJP groove welds on the female end for a length on each end equal to the designated slip fit splice length plus 150 mm.

K. Exposed circumferential welds, except fillet and fatigue-resistant welds, shall be ground flush (-0, +2 mm) with the base metal prior to galvanizing or painting.

L. Circumferential welds and base plate-to-pole welds may be repaired only one time without written permission from the Engineer.

M. Exposed edges of the plates that make up the base assembly shall be finished smooth and exposed corners of the plates shall be broken unless otherwise shown on the plans. Shafts shall be provided with slip-fitter shaft caps.

N. Flatness of surfaces of 1) base plates that are to come in contact with concrete, grout, or washers and leveling nuts; 2) plates in high-strength bolted connections; 3) plates in

CONTRACT NO. 04-0120R4

CONTRACT CHANGE ORDER NO 108

SHEET 110 OF 267

joints where cap screws are used to secure luminaire and signal arms; and 4) plates used for breakaway slip base assemblies shall conform to the requirements in ASTM A6.

O. Standards shall be straight, with a permissive variation not to exceed 25 mm measured at the midpoint of a 9-m or 11-m standard and not to exceed 20 mm measured at the midpoint of a 5-m through 6-m standard. Variation shall not exceed 25 mm at a point 4.5 m above the base plate for Type 35 and Type 36 standards.

P. Zinc-coated nuts used on fastener assemblies having a specified preload (obtained by specifying a prescribed tension, torque value, or degree of turn) shall be provided with a colored lubricant that is clean and dry to the touch. The color of the lubricant shall be in contrast to the zinc coating on the nut so that the presence of the lubricant is visually obvious. In addition, either the lubricant shall be insoluble in water, or fastener components shall be shipped to the job site in a sealed container.

Q. No holes shall be made in structural members unless the holes are shown on the plans or are approved in writing by the Engineer.

R. Standards with an outside diameter of 300 mm or less shall be round. Standards with an outside diameter greater than 300 mm shall be round or multisided. Multisided standards shall have a minimum of 12 sides which shall be convex and shall have a minimum bend radius of 100 mm.

S. Mast arms for standards shall be fabricated from material as specified for standards, and shall conform to the dimensions shown on the plans.

T. The cast steel option for slip bases shall be fabricated from material conforming to the requirements in ASTM Designation: A 27/A 27M, Grade 70-40. Other comparable material may be used if written permission is given by the Engineer. The casting tolerances shall be in conformance with the Steel Founder's Society of America recommendations (green sand molding).

U. One casting from each lot of 50 castings or less shall be subject to radiographic inspection, in conformance with the requirements in ASTM Designation: E 94. The castings shall comply with the acceptance criteria severity level 3 or better for the types and categories of discontinuities in conformance with the requirements in ASTM Designations: E 186 and E 446. If the one casting fails to pass the inspection, 2 additional castings shall be radiographed. Both of these castings shall pass the inspection, or the entire lot of 50 will be rejected.

V. Material certifications, consisting of physical and chemical properties, and radiographic films of the castings shall be filed at the manufacturer's office. These certifications and films shall be available for inspection upon request.

W. High-strength bolts, nuts, and flat washers used to connect slip base plates shall conform to the requirements in ASTM Designation: A 325 or A 325M and shall be galvanized in conformance with the provisions in Section 75-1.05, "Galvanizing."

X. Plate washers shall be fabricated by saw cutting and drilling steel plate conforming to the requirements in AISI Designation: 1018, and be galvanized in conformance with the provisions in Section 75-1.05, "Galvanizing." Prior to galvanizing, burrs and sharp edges shall be removed and holes shall be chamfered sufficiently on each side to allow the bolt head to make full contact with the washer without tension on the bolt.

Y. High-strength cap screws shown on the plans for attaching arms to standards shall conform to the requirements in ASTM Designation: A 325, A 325M, or A 449, and shall comply with the mechanical requirements in ASTM Designation: A 325 or A 325M after galvanizing. The cap screws shall be galvanized in conformance with the provisions in Section 75-1.05, "Galvanizing." The threads of the cap screws shall be coated with a

CONTRACT NO. 04-012024

CONTRACT CHANGE ORDER NO 108

SHEET 111 OF 267

colored lubricant that is clean and dry to the touch. The color of the lubricant shall be in contrast to the color of the zinc coating on the cap screw so that presence of the lubricant is visually obvious. In addition, either the lubricant shall be insoluble in water, or fastener components shall be shipped to the job site in a sealed container.

Z. Unless otherwise specified, bolted connections attaching signal or luminaire arms to poles shall be considered slip critical. Galvanized faying surfaces on plates on luminaire and signal arms and matching plate surfaces on poles shall be roughened by hand using a wire brush prior to assembly and shall conform to the requirements for Class C surface conditions for slip-critical connections in "Specification for Structural Joints Using ASTM A 325 or A 490 Bolts," a specification approved by the Research Council on Structural Connections (RCSC) of the Engineering Foundation. For faying surfaces required to be painted, the paint shall be an approved type, brand, and thickness that has been tested and approved according to the RCSC Specification as a Class B coating.

AA. Samples of fastener components will be randomly taken from each production lot by the Engineer and submitted, along with test reports required by appropriate ASTM fastener specifications, for QA testing and evaluation. Sample sizes for each fastener component shall be as determined by the Engineer.

The seventh paragraph of Section 86-2.04, "Standards, Steel Pedestals and Posts," of the Standard Specifications is amended to read:

• To avoid interference of arm plate-to-tube welds with cap screw heads, and to ensure cap screw heads can be turned using conventional installation tools, fabricators shall make necessary adjustments to details prior to fabrication and properly locate the position of arm tubes on arm plates during fabrication.

The fourth subparagraph of the eighteenth paragraph in Section 86-2.05C, "Installation," of the Standard Specifications is amended to read:

• The conduit shall be placed in the bottom of the trench, and the trench shall be backfilled with minor concrete conforming to the provisions in Section 90-10, "Minor Concrete." Minor concrete shall contain not less than 350 kilograms of cementitious material per cubic meter. Concrete backfill shall be placed to the pavement surface except, when the trench is in asphalt concrete pavement and additional pavement is not being placed, the top 30 mm of the trench shall be backfilled with asphalt concrete produced from commercial quality paving asphalt and aggregates.

The third subparagraph of the twenty-third paragraph in Section 86-2.05C, "Installation," of the Standard Specifications is amended to read:

• Precast concrete conduit cradles shall conform to the dimensions shown on the plans and shall be constructed of minor concrete and commercial quality welded wire fabric. Minor concrete shall conform to the provisions in Section 90-10, "Minor Concrete," and shall contain not less than 350 kilograms of cementitious material per cubic meter. The cradles shall be moist cured for not less than 3 days.

The seventh subparagraph of the twenty-third paragraph in Section 86-2.05C, "Installation," of the Standard Specifications is amended to read:

• The space around conduits through bridge abutment walls shall be filled with mortar conforming to the provisions in Section 51-1.135, "Mortar," except that the proportion of cementitious material to sand shall be 1:3.

The fifth paragraph in Section 86-2.07, "Traffic Pull Boxes," of the Standard Specifications is amended to read:

• Concrete placed around and under traffic pull boxes as shown on the plans shall be minor concrete conforming to the provisions in Section 90-10, "Minor Concrete."

The traffic signal controller cabinet requirement in the table in Section 86-2.08A, "Conductor Identification," of the Standard Specifications is amended to read:

Traffic Signal Controller Cabinet	Ungrounded Circuit Conductor	Blk	None	CON-1	6
	Grounded Circuit Conductor	Wht	None	CON-2	6

The second paragraph of Section 86-2.08B, "Multiple Circuit Conductors," of the Standard Specifications is amended to read by the following 2 paragraphs:

• At any point, the minimum insulation thickness of any Type USE, RHH, or RHW insulation shall be 1.0 mm for conductor sizes No. 14 to No. 10, inclusive; and 1.3 mm for No. 8 to No. 2, inclusive.
• At any point, the minimum insulation thickness of any Type THW or TW wires shall be 0.7 mm for conductor sizes No. 14 to No. 10, inclusive; 1.0 mm for No. 8; and 1.4 mm for No. 6 to No. 2, inclusive.

The sixth and seventh paragraphs of 86-2.12, "Wood Poles," of the Standard Specifications are amended to read:

• After fabrication, wood poles shall be pressure treated in conformance with the provisions in Section 58, "Preservative Treatment of Lumber, Timber and Piling," and AWPA Use Category System: UC4B, Commodity Specification D.
• Wood poles, when specified in the special provisions to be painted, shall be treated with waterborne wood preservatives.

The first paragraph of Section 86-2.15, "Galvanizing," of the Standard Specifications is amended to read:

• Galvanizing shall be in conformance with the provisions in Section 75-1.05, "Galvanizing," except that cabinets may be constructed of material galvanized prior to fabrication in conformance with the requirements in ASTM Designation: A 653/653M, Coating Designation G 90, in which case all cut or damaged edges shall be painted with at least 2 applications of approved unthinned zinc-rich primer (organic vehicle type) conforming to the provisions in Section 91, "Paint." Aerosol cans shall not be used. Other types of protective coating must be approved by the Engineer prior to installation.

Item B of the thirteenth paragraph of Section 86-2.16, "Painting," of the Standard Specifications is amended to read:

CONTRACT NO. 04-012024

CONTRACT CHANGE ORDER NO 108

SHEET 113 OF 267

B. Salt Spray Resistance - The undercutting of the film of the coating system shall not exceed 3 mm average, from lines scored diagonally and deep enough to expose the base metal, after 336 hours exposure in a salt spray cabinet in conformance with the requirements in ASTM Designation: B 117.

The first paragraph of Section 86-4.01, "Vehicle Signal Faces," of the Standard Specifications is amended to read:

• Each vehicle signal face shall be of the adjustable type conforming to the requirements in Institute of Transportation Engineers (ITE) Publication: ST-017B, "Vehicle Traffic Control Signal Heads."

Subparagraphs 1 and 3 of the first paragraph of Section 86-4.01A, "Optical Units," of the Standard Specifications are amended to read:

- Lenses, reflectors, reflector assemblies, lamp receptacles, lamps, wiring and light distribution shall conform to the requirements in ITE Publication: ST-017B.

- All reflectors shall conform to the requirements in ITE Publication: ST-017B except that reflectors shall be made of silvered glass or of specular aluminum with an anodic coating. Reflector ring holder shall be made of cast aluminum.

The first paragraph of Section 86-4.01B, "Signal Sections," of the Standard Specifications is amended to read:

• Each signal section housing shall be either die-cast or permanent mold-cast aluminum conforming to ITE Publication: ST-017B or, when specified in the special provisions, shall be structural plastic.

The first paragraph of Section 86-4.01C, "Electrical Components," of the Standard Specifications is amended to read:

• Lamp receptacles and wiring shall conform to ITE Publication: ST-017B. The metal portion of the medium base lamp socket shall be brass, copper or phosphor bronze.

The first paragraph of Section 86-4.01D, "Visors," of the Standard Specifications is amended to read:

• Each signal section shall be provided with a removable visor conforming to the requirements in ITE Publication: ST-017B. Visors are classified, on the basis of lens enclosure, as full circle, tunnel (bottom open), or cap (bottom and lower sides open). Unless otherwise specified, visors shall be the tunnel type.

The first paragraph of Section 86-4.02A, "Physical and Mechanical Requirements," of the Standard Specifications is amended to read:

• Light emitting diode signal modules shall be designed as retrofit replacements for optical units of standard traffic signal sections and shall not require special tools for installation. Light emitting diode signal modules shall fit into existing traffic signal section housings built in conformance with the requirements in the Institute of Transportation Engineers (ITE) publication ST-017B, "Vehicle Traffic Control Signal Heads (VTCSH)" without modification to the housing.

The seventh paragraph of Section 86-4.02A, "Physical and Mechanical Requirements," of the Standard Specifications is amended to read:

• Light emitting diode signal modules shall be protected against dust and moisture intrusion in conformance with the requirements in NEMA Standard 250 for Type 4 enclosures to protect the internal components.

The first paragraph of Section 86-4.02B, "Photometric Requirements," of the Standard Specifications is amended to read:

• The minimum initial luminous intensity values for light emitting diode signal modules shall conform to the requirements in Section 11.04 of the Institute of Transportation Engineers (ITE) publication ST-017B, "Vehicle Traffic Control Signal Heads (VTCSH)" at 25°C.

The third paragraph of Section 86-4.02C, "Electrical," of the Standard Specifications is amended to read:

• The light emitting diode signal module on-board circuitry shall include voltage surge protection to withstand high-repetition noise transients as specified in Section 2.1.6 of NEMA Standard TS2.

Subparagraph 7 of the fourth paragraph of Section 86-4.02D(1), "Design Qualification Testing," of the Standard Specifications is amended to read:

• Moisture resistance testing shall be performed on light emitting diode signal modules in conformance with the requirements in NEMA Standard 250 for Type 4 enclosures. Evidence of internal moisture after testing shall be cause for rejection.

The second paragraph of Section 86-4.05, "Programmed Visibility Vehicle Signal Faces," of the Standard Specifications is amended to read:

• Each programmed visibility signal section shall provide a nominal 300-mm diameter circular or arrow indication. Color and arrow configuration shall conform to the requirements in ITE Publication: ST-017B.

The first paragraph of Section 86-4.06, "Pedestrian Signal Faces," of the Standard Specifications is amended to read:

• Message symbols for pedestrian signal faces shall be white WALKING PERSON and Portland orange UPRAISED HAND conforming to the requirements in the Institute of Transportation Engineers Standards: "Pedestrian Traffic Control Signal Indications" and

CONTRACT NO. 64-012024

CONTRACT CHANGE ORDER NO 108

SHEET 113 OF 267

"California MUTCD." The height of each symbol shall be not less than 250 mm and the width of each symbol shall be not less than 165 mm.

Subparagraph 3 of the first paragraph of Section 86-4.06A, "Types," of the Standard Specifications is amended to read:

- Each reflector assembly shall consist of a double reflector or 2 single reflectors. Each reflector shall be made of either aluminum or plastic. Reflectors shall conform to the requirements in Institute of Transportation Engineers Publication: ST-017B, "Vehicle Traffic Control Signal Heads." Plastic reflectors shall consist of molded or vacuum-formed plastic with a vacuum-deposited aluminum reflecting surface. The plastic material shall not distort when the reflector is used with the lamp of the wattage normally furnished with the signal. In addition, the UL nonmechanical loading temperature of the material shall exceed, by at least 10°C, the maximum temperature in the signal section with the lamp "ON" and measured in an ambient air temperature of 25°C in conformance with the requirements in UL Publication UL 746B. Each completed reflector shall, when operated with the appropriate lamp and lens, provide the message brightness specified.

The tenth paragraph of Section 86-4.07, "Light Emitting Diode Pedestrian Signal Face 'Upraised Hand' Module," of the Standard Specifications is amended to read:

- The luminance of the "UPRAISED HAND" symbol shall be 3750 cd/m^2 minimum. The color of "UPRAISED HAND" shall be Portland orange conforming to the requirements of the Institute of Transportation Engineers Standards: "Pedestrian Traffic Control Signal Indications" and "California MUTCD." The height of each symbol shall be not less than 250 mm and the width of each symbol shall be not less than 165 mm.

The second paragraph of Section 86-4.07C, "Electrical," of the Standard Specifications is amended to read:

- On-board circuitry of the light emitting diode pedestrian signal modules shall include voltage surge protection to withstand high-repetition noise transients as stated in Section 2.1.6 of NEMA Standard TS2.

The second paragraph of Section 86-4.07D(1), "Design Qualification Testing," of the Standard Specifications is amended to read:

- A quantity of 2 units for each design shall be submitted for Design Qualification Testing. Test units shall be submitted to the Transportation Laboratory, after manufacturer's testing is complete.

Subparagraphs 5 and 7 of the fourth paragraph of Section 86-4.07D(1), "Design Qualification Testing," of the Standard Specifications are amended to read:

- Mechanical vibration testing shall be in conformance with the requirements in Military Specification MIL-STD-883, Test Method 2007, using three 4-minute cycles along each x, y and z axis, at a force of 2.5 Gs, with a frequency sweep from 2 Hz to

120 Hz. The loosening of the lens or of internal components, or other physical damage shall be cause for rejection.

- Moisture resistance testing shall be performed on modules mounted in a standard pedestrian signal housing in conformance to the requirements in NEMA Standard 250 for Type 4 enclosures. Evidence of internal moisture after testing shall be cause for rejection.

The cone penetration, flow, and resilience requirements in the table in the second paragraph under "Hot-Melt Rubberized Asphalt Sealant" of Section 86-5.01A(5), "Installation Details," of the Standard Specifications is amended to read:

Cone Penetration, 25°C, 150 g, 5 s	D 5329, Sec. 6	3.5 mm, max.
Flow, 60°C	D 5329, Sec. 8	5 mm, max.
Resilience, 25°C	D 5329, Sec. 12	25%, min.

The first paragraph in Section 86-5.01D, "Removing or Abandoning Existing Pressure-Sensitive Detectors," of the Standard Specifications is amended to read:

- When a foundation for a pressure-sensitive vehicle detector is to be removed, the hole left by removing the detector frame and foundation shall be filled with minor concrete, except the roadway surface shall be reconstructed with material to match existing surfacing. Minor concrete shall conform to the provisions in Section 90-10, "Minor Concrete," except that the concrete shall contain not less than 250 kilograms of cementitious material per cubic meter for asphalt concrete surfaced roadways and not less than 350 kilograms of cementitious material per cubic meter for portland cement concrete surfaced roadways.

The third paragraph under "Mounting Assemblies" of Section 86-6.065, "Internally Illuminated Street Name Signs," of the Standard Specifications is amended to read:

- At least 4.9 m of clearance shall be provided between the bottom of the fixture and the roadway.

The first paragraph of Section 86-8.01, "Payment," of the Standard Specifications is amended to read:

- The contract lump sum price or prices paid for signal, ramp metering, flashing beacon, lighting, sign illumination, traffic monitoring station, highway advisory radio systems, closed circuit television systems, or combinations thereof; for modifying or removing those systems; for temporary systems; or the lump sum or unit prices paid for various units of those systems; or the lump sum or per meter price paid for conduit of the various sizes, types and installation methods listed in the Engineer's Estimate shall include full compensation for furnishing all labor, materials, tools, equipment and incidentals, and for doing all the work involved in furnishing and installing, modifying, or removing the systems, combinations or units thereof, as shown on the plans, as specified in these specifications and the special provisions, and as directed by the Engineer, including any necessary pull boxes (except when the type required is shown as a separate contract item); excavation and backfill; concrete foundations (except when shown as a separate contract item); pedestrian barricades; furnishing and installing illuminated street name

CONTRACT NO. 04-012024

CONTRACT CHANGE ORDER NO 108

SHEET 117 OF 267

signs; installing sign panels on pedestrian barricades, on flashing beacon standards, and on traffic signal mast arms; restoring sidewalk, pavement and appurtenances damaged or destroyed during construction; salvaging existing materials; and making all required tests.

Section 86-8.01, "Payment," of the Standard Specifications is amended by adding the following paragraph after the first paragraph:

• If a portion or all of the poles for signal, lighting and electrical systems pursuant to Standard Specification Section 86, "Signals, Lighting and Electrical Systems," is fabricated more than 480 air line kilometers from both-Sacramento and Los Angeles, additional shop inspection expenses will be sustained by the State. Whereas it is and will be impracticable and extremely difficult to ascertain and determine the actual increase in such expenses, it is agreed that payment to the Contractor for furnishing such items from each fabrication site located more than 480 air line kilometers from both Sacramento and Los Angeles will be reduced $5000; in addition, in the case where a fabrication site is located more than 4800 air line kilometers from both Sacramento and Los Angeles, payment will be reduced an additional $3000 per each fabrication site ($8000 total per site).

SECTION 88: ENGINEERING FABRIC

Issue Date: January 15, 2002

Section 88-1.02, "Pavement Reinforcing Fabric," of the Standard Specifications is amended to read:

• Pavement reinforcing fabric shall be 100 percent polypropylene staple fiber fabric material, needle-punched, thermally bonded on one side, and conform to the following:

Specification	Requirement
Weight, grams per square meter ASTM Designation: D 5261	140
Grab tensile strength (25-mm grip), kilonewtons, min. in each direction ASTM Designation: D 4632	0.45
Elongation at break, percent min. ASTM Designation: D 4632	50
Asphalt retention by fabric, grams per square meter. (Residual Minimum) ASTM Designation: D 6140	900

Note: Weight, grab, elongation and asphalt retention are based on Minimum Average Roll Value (MARV)

SECTION 90: PORTLAND CEMENT CONCRETE

Issue Date: March 16, 2007

Section 90, "Portland Cement Concrete," of the Standard Specifications is amended to read:

CONTRACT NO. 04-012024

CONTRACT CHANGE ORDER NO 108

SHEET 115 OF 207

SECTION 90: PORTLAND CEMENT CONCRETE

90-1 GENERAL

90-1.01 DESCRIPTION

• Portland cement concrete shall be composed of cementitious material, fine aggregate, coarse aggregate, admixtures if used, and water, proportioned and mixed as specified in these specifications.

• The Contractor shall determine the mix proportions for concrete in conformance with these specifications.

• Class 1 concrete shall contain not less than 400 kg of cementitious material per cubic meter.

• Class 2 concrete shall contain not less than 350 kg of cementitious material per cubic meter.

• Class 3 concrete shall contain not less than 300 kg of cementitious material per cubic meter.

• Class 4 concrete shall contain not less than 250 kg of cementitious material per cubic meter.

• Minor concrete shall contain not less than 325 kg of cementitious material per cubic meter unless otherwise specified in these specifications or the special provisions.

• Unless otherwise designated on the plans or specified in these specifications or the special provisions, the amount of cementitious material used per cubic meter of concrete in structures or portions of structures shall conform to the following:

Use	Cementitious Material Content (kg/m^3)
Concrete designated by compressive strength:	
Deck slabs and slab spans of bridges	400 min., 475 max.
Roof sections of exposed top box culverts	400 min., 475 max.
Other portions of structures	350 min., 475 max.
Concrete not designated by compressive strength:	
Deck slabs and slab spans of bridges	400 min.
Roof sections of exposed top box culverts	400 min.
Prestressed members	400 min.
Seal courses	400 min.
Other portions of structures	350 min.
Concrete for precast members	350 min., 550 max.

• Whenever the 28-day compressive strength shown on the plans is greater than 25 MPa, the concrete shall be designated by compressive strength. If the plans show a 28-day compressive strength that is 28 MPa or greater, an additional 14 days will be allowed to obtain the specified strength. The 28-day compressive strengths shown on the plans that are 25 MPa or less are shown for design information only and are not a requirement for acceptance of the concrete.

• Concrete designated by compressive strength shall be proportioned such that the concrete will attain the strength shown on the plans or specified in the special provisions.

• Before using concrete for which the mix proportions have been determined by the Contractor, or in advance of revising those mix proportions, the Contractor shall submit in writing to the Engineer a copy of the mix design.

• Compliance with cementitious material content requirements will be verified in conformance with procedures described in California Test 518 for cement content. For testing

CONTRACT NO. 04-012024

CONTRACT CHANGE ORDER NO 1085

SHEET 119 OF 267

purposes, supplementary cementitious material shall be considered to be cement. Batch proportions shall be adjusted as necessary to produce concrete having the specified cementitious material content.

• If any concrete has a cementitious material, portland cement, or supplementary cementitious material content that is less than the minimum required, the concrete shall be removed. However, if the Engineer determines that the concrete is structurally adequate, the concrete may remain in place and the Contractor shall pay to the State $0.55 for each kilogram of cementitious material, portland cement, or supplementary cementitious material that is less than the minimum required. The Department may deduct the amount from any moneys due, or that may become due, the Contractor under the contract. The deductions will not be made unless the difference between the contents required and those actually provided exceeds the batching tolerances permitted by Section 90-5, "Proportioning." No deductions will be made based on the results of California Test 518.

• The requirements of the preceding paragraph shall not apply to minor concrete or commercial quality concrete.

90-2 MATERIALS

90-2.01 CEMENTITIOUS MATERIALS

• Unless otherwise specified, cementitious material shall be either a combination of Type II or Type V portland cement and a supplementary cementitious material, or a blended cement.

• Cementitious materials used in cast-in-place concrete for exposed surfaces of like elements of a structure shall be from the same sources and of the same proportions.

• Cementitious materials shall be protected from moisture until used. Sacked cementitious materials shall be piled to permit access for tallying, inspecting, and identifying each shipment.

• Facilities shall be provided to ensure that cementitious materials meeting this Section 90-2.01 are kept separate from other cementitious materials. Sampling cementitious materials shall be in conformance with California Test 125.

• The Contractor shall furnish a Certificate of Compliance for cementitious materials in conformance with the provisions in Section 6-1.07, "Certificates of Compliance." The Certificate of Compliance shall indicate the source by name and location (including country, state, and city). If cementitious material is delivered directly to the job site, the Certificate of Compliance shall be signed by the cementitious material supplier. If the cementitious material is used in ready-mixed concrete or in precast concrete products purchased as such by the Contractor, the Certificate of Compliance shall be signed by the manufacturer of the concrete or product.

90-2.01A CEMENT

• Portland cement shall conform to the requirements in ASTM Designation: C 150 except, using a 10-sample moving average, limestone shall not exceed 2.5 percent. The C_3S content of Type II cement shall not exceed 65 percent.

• Blended cement shall conform to the requirements for Portland Blast-Furnace Slag, Cement Type IS (MS) or Portland-Pozzolan Cement, Type IP (MS) in AASHTO Designation: M 240 and shall be comprised of an intimate and uniform blend of Type II or Type V cement and supplementary cementitious material in an amount conforming to the requirements in Section 90-2.01C, "Required Use of Supplementary Cementitious Materials."

• In addition, blended cement, Type II portland cement, and Type V portland cement shall conform to the following requirements:

CONTRACT NO. 04-0120R4

CONTRACT CHANGE ORDER NO 108

SHEET 120 OF 267

A. The cement shall not contain more than 0.60-percent by mass of alkalies, calculated as the percentage of Na_2O plus 0.658 times the percentage of K_2O, when determined by methods as required in AASHTO Designation: T 105;
B. The autoclave expansion shall not exceed 0.50-percent; and
C. Mortar, containing the cement to be used and Ottawa sand, when tested in conformance with California Test 527, shall not expand in water more than 0.010-percent and shall not contract in air more than 0.048-percent, except that when cement is to be used for precast prestressed concrete piling, precast prestressed concrete members, or steam cured concrete products, the mortar shall not contract in air more than 0.053-percent.

• Type III portland cement shall be used only as specified in the special provisions or with the approval of the Engineer. Type III portland cement shall conform to the additional requirements listed above for Type II portland cement, except when tested in conformance with California Test 527, mortar containing Type III portland cement shall not contract in air more than 0.075-percent.

90-2.01B SUPPLEMENTARY CEMENTITIOUS MATERIALS (SCM)

• Fly ash shall conform to the requirements in AASHTO Designation: M 295, Class F, and the following:

A. Calcium oxide content shall not exceed 10 percent.
B. The available alkali, as sodium oxide equivalent, shall not exceed 1.5 percent when determined in conformance with the requirements in ASTM Designation: C 311 or the total alkali, as sodium oxide equivalent, shall not exceed 5.0 percent when determined in conformance with the requirements in AASHTO Designation: T 105.
C. Commingling of fly ash from different sources at uncontrolled ratios is permissible only if the following criteria are satisfied:

1. Sources of fly ash to be commingled shall be on the approved list of materials for use in concrete.
2. Testing of the commingled product is the responsibility of the fly ash supplier.
3. Each fly ash's running average of density shall not differ from any other by more than $0.25 g/cm^3$ at the time of commingling.
4. Each fly ash's running average of loss on ignition shall not differ from any other by more than one percent at the time of commingling.
5. The final product of commingled fly ash shall conform to the requirement in AASHTO Designation: M 295.

• Raw or calcined natural pozzolans shall conform to the requirements in AASHTO Designation: M 295, Class N and the following requirements:

A. Calcium oxide content shall not exceed 10 percent.
B. The available alkali, as sodium oxide equivalent, shall not exceed 1.5 percent when determined in conformance with the requirements in ASTM Designation: C 311 or the total alkali, as sodium oxide equivalent, shall not exceed 5.0 percent when determined in conformance with the requirements in AASHTO Designation: T 105.

CONTRACT NO. 04-012024

CONTRACT CHANGE ORDER NO 108

SHEET 121 OF 267

• Ground Granulated Blast Furnace Slag (GGBFS) shall conform to the requirements in AASHTO Designation: M 302, Grade 100 or Grade 120.

• Silica Fume shall conform to the requirements of AASHTO Designation: M 307 with reduction in mortar expansion of 80 percent, minimum, using the cement from the proposed mix design.

90-2.01C REQUIRED USE OF SUPPLEMENTARY CEMENTITIOUS MATERIALS

• The amount of portland cement and SCM used in portland cement concrete shall conform to the minimum cementitious material content provisions in Section 90-1.01, "Description," or Section 90-4.05, "Optional Use of Chemical Admixtures," and the following:

A. If a blended cement conforming to the provisions in Section 90-2.01A, "Cement," is used, the minimum amount of SCM incorporated into the cement shall conform to the provisions in this Section 90-2.01C.
B. Fly ash or natural pozzolan, silica fume, or GGBFS shall not be used with Type IP or Type IS cements.

• Use of SCMs shall conform to the following:

A. If fly ash or natural pozzolan is used:

1. The minimum amount of portland cement shall not be less than 75 percent by mass of the specified minimum cementitious material content.
2. The minimum amount of fly ash or natural pozzolan shall be:
   a. Fifteen percent by mass of the total amount of cementitious material if the calcium oxide content of fly ash or natural pozzolan is equal to or less than 2 percent by mass;
   b. Twenty-five percent by mass of the total amount of cementitious material if the calcium oxide content of fly ash or natural pozzolan is greater than 2 percent by mass.

B. The total amount of fly ash or natural pozzolan shall not exceed 35 percent by mass of the total amount of cementitious material to be used in the mix. If Section 90-1.01, "Description," specifies a maximum cementitious material content in kilograms per cubic meter, the total mass of portland cement and fly ash or natural pozzolan per cubic meter shall not exceed the specified maximum cementitious material content.
C. If silica fume is used:

1. The amount of silica fume shall not be less than 10 percent by mass of the total amount of cementitious material.
2. The amount of portland cement shall not be less than 75 percent by mass of the specified minimum cementitious material content.
3. If Section 90-1.01, "Description," specifies a maximum cementitious material content in kilograms per cubic meter, the total mass of portland cement and silica fume per cubic meter shall not exceed the specified maximum cementitious material content.

D. If GGBFS is used:

1. The minimum amount of GGBFS shall be either:
   a. Forty percent of the total cementitious material to be used, if the aggregates used in the concrete are on the Department's list

CONTRACT NO. 04-012024

CONTRACT CHANGE ORDER NO 108

SHEET 122 OF 267

of "Approved Aggregates For Use in Concrete with Reduced Fly Ash."

b. No less than 50 percent.

2. The amount of GGBFS shall not exceed 60 percent by mass of the total amount of cementitious materials to be used.

90-2.02 AGGREGATES

• Aggregates shall be free from deleterious coatings, clay balls, roots, bark, sticks, rags, and other extraneous material.

• The Contractor shall provide safe and suitable facilities, including necessary splitting devices for obtaining samples of aggregates, in conformance with California Test 125.

• Aggregates shall be of such character that it will be possible to produce workable concrete within the limits of water content provided in Section 90-6.06, "Amount of Water and Penetration."

• Aggregates shall have not more than 10 percent loss when tested for soundness in conformance with the requirements in California Test 214. The soundness requirement for fine aggregate will be waived, provided that the durability index, D_f, of the fine aggregate is 60 or greater when tested for durability in conformance with California Test 229.

• If the results of any one or more of the Cleanness Value, Sand Equivalent, or aggregate grading tests do not meet the requirements specified for "Operating Range" but all meet the "Contract Compliance" requirements, the placement of concrete shall be suspended at the completion of the current pour until tests or other information indicate that the next material to be used in the work will comply with the requirements specified for "Operating Range."

• If the results of either or both the Cleanness Value and coarse aggregate grading tests do not meet the requirements specified for "Contract Compliance," the concrete that is represented by the tests shall be removed. However, if the Engineer determines that the concrete is structurally adequate, the concrete may remain in place, and the Contractor shall pay to the State $4.60 per cubic meter for paving concrete and $7.20 per cubic meter for all other concrete for the concrete represented by these tests and left in place. The Department may deduct the amount from any moneys due, or that may become due, the Contractor under the contract.

• If the results of either or both the Sand Equivalent and fine aggregate grading tests do not meet the requirements specified for "Contract Compliance," the concrete that is represented by the tests shall be removed. However, if the Engineer determines that the concrete is structurally adequate, the concrete may remain in place and the Contractor shall pay to the State $4.60 per cubic meter for paving concrete and $7.20 per cubic meter for all other concrete for the concrete represented by these tests and left in place. The Department may deduct the amount from any moneys due, or that may become due, the Contractor under the contract.

• The 2 preceding paragraphs apply individually to the "Contract Compliance" requirements for coarse aggregate and fine aggregate. When both coarse aggregate and fine aggregate do not conform to the "Contract Compliance" requirements, both paragraphs shall apply. The payments specified in those paragraphs are in addition to any payments made in conformance with the provisions in Section 90-1.01, "Description."

• No single Cleanness Value, Sand Equivalent, or aggregate grading test shall represent more than 250 m^3 of concrete or one day's pour, whichever is smaller.

• When the source of an aggregate is changed, the Contractor shall adjust the mix proportions and submit in writing to the Engineer a copy of the mix design before using the aggregates.

CONTRACT NO. 04-0L2014

CONTRACT CHANGE ORDER NO 108

SHEET 123 OF 267

90-2.02A COARSE AGGREGATE

• Coarse aggregate shall consist of gravel, crushed gravel, crushed rock, reclaimed aggregate, crushed air-cooled iron blast furnace slag or combinations thereof. Crushed air-cooled blast furnace slag shall not be used in reinforced or prestressed concrete.

• Reclaimed aggregate is aggregate that has been recovered from plastic concrete by washing away the cementitious material. Reclaimed aggregate shall conform to all aggregate requirements.

• Coarse aggregate shall conform to the following quality requirements:

Tests	California Test	Requirements
Loss in Los Angeles Rattler (after 500 revolutions)	211	45% max.
Cleanness Value		
Operating Range	227	75 min.
Contract Compliance	227	71 min.

• In lieu of the above Cleanness Value requirements, a Cleanness Value "Operating Range" limit of 71, minimum, and a Cleanness Value "Contract Compliance" limit of 68, minimum, will be used to determine the acceptability of the coarse aggregate if the Contractor furnishes a Certificate of Compliance, as provided in Section 6-1.07, "Certificates of Compliance," certifying that:

A. Coarse aggregate sampled at the completion of processing at the aggregate production plant had a Cleanness Value of not less than 82 when tested in conformance with the requirements in California Test 227; and

B. Prequalification tests performed in conformance with the requirements in California Test 549 indicated that the aggregate would develop a relative strength of not less than 95 percent and would have a relative shrinkage not greater than 105 percent, based on concrete.

90-2.02B FINE AGGREGATE

• Fine aggregate shall consist of natural sand, manufactured sand produced from larger aggregate or a combination thereof. Manufactured sand shall be well graded.

• Fine aggregate shall conform to the following quality requirements:

Test	California Test	Requirements
Organic Impurities	213	Satisfactory[a]
Mortar Strengths Relative to Ottawa Sand	515	95%, min.
Sand Equivalent:		
Operating Range	217	75, min.
Contract Compliance	217	71, min.

a Fine aggregate developing a color darker than the reference standard color solution may be accepted if it is determined by the Engineer, from mortar strength tests, that a darker color is acceptable.

• In lieu of the above Sand Equivalent requirements, a Sand Equivalent "Operating Range" limit of 71, minimum, and a Sand Equivalent "Contract Compliance" limit of 68, minimum, will be used to determine the acceptability of the fine aggregate if the Contractor furnishes a

CONTRACT NO. 04-0A2024

CONTRACT CHANGE ORDER NO 108

SHEET 124 OF 267

Certificate of Compliance, as provided in Section 6-1.07, "Certificates of Compliance," certifying that:

A. Fine aggregate sampled at the completion of processing at the aggregate production plant had a Sand Equivalent value of not less than 82 when tested by California Test 217; and
B. Prequalification tests performed in conformance with California Test 549 indicated that the aggregate would develop a relative strength of not less than 95 percent and would have a relative shrinkage not greater than 105 percent, based on concrete.

90-2.03 WATER

• In conventionally reinforced concrete work, the water for curing, for washing aggregates, and for mixing shall be free from oil and shall not contain more than 1000 parts per million of chlorides as Cl, when tested in conformance with California Test 422, nor more than 1300 parts per million of sulfates as SO_4, when tested in conformance with California Test 417. In prestressed concrete work, the water for curing, for washing aggregates, and for mixing shall be free from oil and shall not contain more than 650 parts per million of chlorides as Cl, when tested in conformance with California Test 422, nor more than 1300 parts per million of sulfates as SO_4, when tested in conformance with California Test 417. In no case shall the water contain an amount of impurities that will cause either: 1) a change in the setting time of cement of more than 25 percent when tested in conformance with the requirements in ASTM Designation: C 191 or ASTM Designation: C 266 or 2) a reduction in the compressive strength of mortar at 14 days of more than 5 percent, when tested in conformance with the requirements in ASTM Designation: C 109, when compared to the results obtained with distilled water or deionized water, tested in conformance with the requirements in ASTM Designation: C 109.

• In nonreinforced concrete work, the water for curing, for washing aggregates and for mixing shall be free from oil and shall not contain more than 2000 parts per million of chlorides as Cl, when tested in conformance with California Test 422, or more than 1500 parts per million of sulfates as SO_4, when tested in conformance with California Test 417.

• In addition to the above provisions, water for curing concrete shall not contain impurities in a sufficient amount to cause discoloration of the concrete or produce etching of the surface.

• Water reclaimed from mixer wash-out operations may be used in mixing concrete. The water shall not contain coloring agents or more than 300 parts per million of alkalis ($Na_2O + 0.658\ K_2O$) as determined on the filtrate. The specific gravity of the water shall not exceed 1.03 and shall not vary more than ±0.010 during a day's operations.

90-2.04 ADMIXTURE MATERIALS

• Admixture materials shall conform to the requirements in the following ASTM Designations:

A. Chemical Admixtures—ASTM Designation: C 494.
B. Air-entraining Admixtures—ASTM Designation: C 260.

90-3 AGGREGATE GRADINGS

90-3.01 GENERAL

• Before beginning concrete work, the Contractor shall submit in writing to the Engineer the gradation of the primary aggregate nominal sizes that the Contractor proposes to furnish. If a primary coarse aggregate or the fine aggregate is separated into 2 or more sizes, the proposed

CONTRACT NO. 04-012024

CONTRACT CHANGE ORDER NO 108

SHEET 125 OF 267

gradation shall consist of the gradation for each individual size, and the proposed proportions of each individual size, combined mathematically to indicate one proposed gradation. The proposed gradation shall meet the grading requirements shown in the table in this section, and shall show the percentage passing each of the sieve sizes used in determining the end result.

• The Engineer may waive, in writing, the gradation requirements in this Section 90-3.01 and in Sections 90-3.02, "Coarse Aggregate Grading," 90-3.03, "Fine Aggregate Grading," and 90-3.04, "Combined Aggregate Gradings," if, in the Engineer's opinion, furnishing the gradation is not necessary for the type or amount of concrete work to be constructed.

• Gradations proposed by the Contractor shall be within the following percentage passing limits:

Primary Aggregate Nominal Size	Sieve Size	Limits of Proposed Gradation
37.5-mm x 19-mm	25-mm	19 - 41
25-mm x 4.75-mm	19-mm	52 - 85
25-mm x 4.75-mm	9.5-mm	15 - 38
12.5-mm x 4.75-mm	9.5-mm	40 - 78
9.5-mm x 2.36-mm	9.5-mm	50 - 85
Fine Aggregate	1.18-mm	55 - 75
Fine Aggregate	600-µm	34 - 46
Fine Aggregate	300-µm	16 - 29

• Should the Contractor change the source of supply, the Contractor shall submit in writing to the Engineer the new gradations before their intended use.

90-3.02 COARSE AGGREGATE GRADING

• The grading requirements for coarse aggregates are shown in the following table for each size of coarse aggregate:

Sieve Sizes	Percentage Passing Primary Aggregate Nominal Sizes							
	37.5-mm x 19-mm		25-mm x 4.75-mm		12.5-mm x 4.75-mm		9.5-mm x 2.36-mm	
	Operating Range	Contract Compliance	Operating Range	Contract Compliance	Operating Range	Contract Compliance	Operating Range	Contract Compliance
50-mm	100	100	—	—	—	—	—	—
37.5-mm	88 - 100	85 - 100	100	100	—	—	—	—
25-mm	X ±18	X ±25	88 - 100	86 - 100	—	—	—	—
19-mm	0 - 17	0 - 20	X ±15	X ±22	100	100	—	—
12.5-mm	—	—	—	—	82 - 100	80 - 100	100	100
9.5-mm	0 - 7	0 - 9	X ±15	X ±22	X ±15	X ±22	X ±15	X ±20
4.75-mm	—	—	0 - 16	0 - 18	0 - 15	0 - 18	0 - 25	0 - 28
2.36-mm	—	—	0 - 6	0 - 7	0 - 6	0 - 7	0 - 6	0 - 7

• In the above table, the symbol X is the gradation that the Contractor proposes to furnish for the specific sieve size as provided in Section 90-3.01, "General."

• Coarse aggregate for the 37.5-mm, maximum, combined aggregate grading as provided in Section 90-3.04, "Combined Aggregate Gradings," shall be furnished in 2 or more primary aggregate nominal sizes. Each primary aggregate nominal size may be separated into 2 sizes and stored separately, provided that the combined material conforms to the grading requirements for that particular primary aggregate nominal size.

CONTRACT NO. 04-012024

CONTRACT CHANGE ORDER NO 108

SHEET 126 OF 267

• When the 25-mm, maximum, combined aggregate grading as provided in Section 90-3.04, "Combined Aggregate Gradings," is to be used, the coarse aggregate may be separated into 2 sizes and stored separately, provided that the combined material shall conform to the grading requirements for the 25-mm x 4.75-mm primary aggregate nominal size.

90-3.03 FINE AGGREGATE GRADING

• Fine aggregate shall be graded within the following limits:

Sieve Sizes	Percentage Passing	
	Operating Range	Contract Compliance
9.5-mm	100	100
4.75-mm	95 - 100	93 - 100
2.36-mm	65 - 95	61 - 99
1.18-mm	X ±10	X ±13
600-µm	X ±9	X ±12
300-µm	X ±6	X ±9
150-µm	2 - 12	1 - 15
75-µm	0 - 8	0 - 10

• In the above table, the symbol X is the gradation that the Contractor proposes to furnish for the specific sieve size as provided in Section 90-3.01, "General."

• In addition to the above required grading analysis, the distribution of the fine aggregate sizes shall be such that the difference between the total percentage passing the 1.18-mm sieve and the total percentage passing the 600-µm sieve shall be between 10 and 40, and the difference between the percentage passing the 600-µm and 300-µm sieves shall be between 10 and 40.

• Fine aggregate may be separated into 2 or more sizes and stored separately, provided that the combined material conforms to the grading requirements specified in this Section 90-3.03.

90-3.04 COMBINED AGGREGATE GRADINGS

• Combined aggregate grading limits shall be used only for the design of concrete mixes. Concrete mixes shall be designed so that aggregates are combined in proportions that shall produce a mixture within the grading limits for combined aggregates as specified herein.

• The combined aggregate grading, except when otherwise specified in these specifications or the special provisions, shall be either the 37.5-mm, maximum grading, or the 25-mm, maximum grading, at the option of the Contractor.

CONTRACT NO. 04-012024

CONTRACT CHANGE ORDER NO 108

SHEET 127 OF 267

Grading Limits of Combined Aggregates

Sieve Sizes	Percentage Passing			
	37.5-mm Max.	25-mm Max.	12.5-mm Max.	9.5-mm Max.
50-mm	100	—	—	—
37.5-mm	90 - 100	100	—	—
25-mm	50 - 86	90 - 100	—	—
19-mm	45 - 75	55 - 100	100	—
12.5-mm	—	—	90-100	100
9.5-mm	38 - 55	45 - 75	55 - 86	50 - 100
4.75-mm	30 - 45	35 - 60	45 - 63	45 - 63
2.36-mm	23 - 38	27 - 45	35 - 49	35 - 49
1.18-mm	17 - 33	20 - 35	25 - 37	25 - 37
600-µm	10 - 22	12 - 25	15 - 25	15 - 25
300-µm	4 - 10	5 - 15	5 - 15	5 - 15
150-µm	1 - 6	1 - 8	1 - 8	1 - 8
75-µm	0 - 3	0 - 4	0 - 4	0 - 4

• Changes from one grading to another shall not be made during the progress of the work unless permitted by the Engineer.

90-4 ADMIXTURES

90-4.01 GENERAL

• Admixtures used in portland cement concrete shall conform to and be used in conformance with the provisions in this Section 90-4 and the special provisions. Admixtures shall be used when specified or ordered by the Engineer and may be used at the Contractor's option as provided herein.

• Chemical admixtures and air-entraining admixtures containing chlorides as Cl in excess of one percent by mass of admixture, as determined by California Test 415, shall not be used.

• Admixtures shall be uniform in properties throughout their use in the work. Should it be found that an admixture as furnished is not uniform in properties, its use shall be discontinued.

• If more than one admixture is used, the admixtures shall be compatible with each other so that the desirable effects of all admixtures used will be realized.

• Chemical admixtures shall be used in conformance with the manufacturer's written recommendations.

90-4.02 MATERIALS

• Admixture materials shall conform to the provisions in Section 90–2.04, "Admixture Materials."

90-4.03 ADMIXTURE APPROVAL

• No admixture brand shall be used in the work unless it is on the Department's current list of approved brands for the type of admixture involved.

• Admixture brands will be considered for addition to the approved list if the manufacturer of the admixture submits to the Transportation Laboratory a sample of the admixture accompanied by certified test results demonstrating that the admixture complies with the requirements in the appropriate ASTM Designation and these specifications. The sample shall be sufficient to permit performance of all required tests. Approval of admixture brands will be dependent upon a determination as to compliance with the requirements, based on the certified test results submitted, together with tests the Department may elect to perform.

CONTRACT NO. 04-0120Q4

CONTRACT CHANGE ORDER NO 108

SHEET 126 OF 267

• If the Contractor proposes to use an admixture of a brand and type on the current list of approved admixture brands, the Contractor shall furnish a Certificate of Compliance from the manufacturer, as provided in Section 6-1.07, "Certificates of Compliance," certifying that the admixture furnished is the same as that previously approved. If a previously approved admixture is not accompanied by a Certificate of Compliance, the admixture shall not be used in the work until the Engineer has had sufficient time to make the appropriate tests and has approved the admixture for use. The Engineer may take samples for testing at any time, whether or not the admixture has been accompanied by a Certificate of Compliance.

90-4.04 REQUIRED USE OF CHEMICAL ADMIXTURES

• If the use of a chemical admixture is specified, the admixture shall be used at the dosage specified, except that if no dosage is specified, the admixture shall be used at the dosage normally recommended by the manufacturer of the admixture.

90-4.05 OPTIONAL USE OF CHEMICAL ADMIXTURES

• The Contractor may use Type A or F, water-reducing; Type B, retarding; or Type D or G, water-reducing and retarding admixtures as described in ASTM Designation: C 494 to conserve cementitious material or to facilitate any concrete construction application subject to the following conditions:

A. If a water-reducing admixture or a water-reducing and retarding admixture is used, the cementitious material content specified or ordered may be reduced by a maximum of 5 percent by mass, except that the resultant cementitious material content shall be not less than 300 kilograms per cubic meter; and
B. When a reduction in cementitious material content is made, the dosage of admixture used shall be the dosage used in determining approval of the admixture.

• Unless otherwise specified, a Type C accelerating chemical admixture conforming to the requirements in ASTM Designation: C 494, may be used in portland cement concrete. Inclusion in the mix design submitted for approval will not be required provided that the admixture is added to counteract changing conditions that contribute to delayed setting of the portland cement concrete, and the use or change in dosage of the admixture is approved in writing by the Engineer.

90-4.06 REQUIRED USE OF AIR-ENTRAINING ADMIXTURES

• When air-entrainment is specified or ordered by the Engineer, the air-entraining admixture shall be used in amounts to produce a concrete having the specified air content as determined by California Test 504.

90-4.07 OPTIONAL USE OF AIR-ENTRAINING ADMIXTURES

• When air-entrainment has not been specified or ordered by the Engineer, the Contractor will be permitted to use an air-entraining admixture to facilitate the use of any construction procedure or equipment provided that the average air content, as determined by California Test 504, of 3 successive tests does not exceed 4 percent, and no single test value exceeds 5.5 percent. If the Contractor elects to use an air-entraining admixture in concrete for pavement, the Contractor shall so indicate at the time the Contractor designates the source of aggregate.

CONTRACT NO. 04-0120R4

CONTRACT CHANGE ORDER NO 1056

SHEET 129 OF 267

90-4.08 BLANK

90-4.09 BLANK

90-4.10 PROPORTIONING AND DISPENSING LIQUID ADMIXTURES

• Chemical admixtures and air-entraining admixtures shall be dispensed in liquid form. Dispensers for liquid admixtures shall have sufficient capacity to measure at one time the prescribed quantity required for each batch of concrete. Each dispenser shall include a graduated measuring unit into which liquid admixtures are measured to within ±5 percent of the prescribed quantity for each batch. Dispensers shall be located and maintained so that the graduations can be accurately read from the point at which proportioning operations are controlled to permit a visual check of batching accuracy prior to discharge. Each measuring unit shall be clearly marked for the type and quantity of admixture.

• Each liquid admixture dispensing system shall be equipped with a sampling device consisting of a valve located in a safe and readily accessible position such that a sample of the admixture may be withdrawn slowly by the Engineer.

• If more than one liquid admixture is used in the concrete mix, each liquid admixture shall have a separate measuring unit and shall be dispensed by injecting equipment located in such a manner that the admixtures are not mixed at high concentrations and do not interfere with the effectiveness of each other. When air-entraining admixtures are used in conjunction with other liquid admixtures, the air-entraining admixture shall be the first to be incorporated into the mix, unless it is demonstrated that a different sequence improves performance.

• When automatic proportioning devices are required for concrete pavement, dispensers for liquid admixtures shall operate automatically with the batching control equipment. The dispensers shall be equipped with an automatic warning system in good operating condition that will provide a visible or audible signal at the point at which proportioning operations are controlled when the quantity of admixture measured for each batch of concrete varies from the preselected dosage by more than 5 percent, or when the entire contents of the measuring unit are not emptied from the dispenser into each batch of concrete.

• Unless liquid admixtures are added to premeasured water for the batch, their discharge into the batch shall be arranged to flow into the stream of water so that the admixtures are well dispersed throughout the batch, except that air-entraining admixtures may be dispensed directly into moist sand in the batching bins provided that adequate control of the air content of the concrete can be maintained.

• Liquid admixtures requiring dosages greater than 2.5 L/m^3 shall be considered to be water when determining the total amount of free water as specified in Section 90-6.06, "Amount of Water and Penetration."

90-4.11 BLANK

90-5 PROPORTIONING

90-5.01 STORAGE OF AGGREGATES

• Aggregates shall be stored or stockpiled in such a manner that separation of coarse and fine particles of each size shall be avoided and the various sizes shall not become intermixed before proportioning.

• Aggregates shall be stored or stockpiled and handled in a manner that prevent contamination by foreign materials. In addition, storage of aggregates at batching or mixing

CONTRACT NO. 04-012024

CONTRACT CHANGE ORDER NO 108

SHEET 130 OF 267

facilities that are erected subsequent to the award of the contract and that furnish concrete to the project shall conform to the following:

A. Intermingling of the different sizes of aggregates shall be positively prevented. The Contractor shall take the necessary measures to prevent intermingling. The preventive measures may include, but are not necessarily limited to, physical separation of stockpiles or construction of bulkheads of adequate length and height; and
B. Contamination of aggregates by contact with the ground shall be positively prevented. The Contractor shall take the necessary measures to prevent contamination. The preventive measures shall include, but are not necessarily limited to, placing aggregates on wooden platforms or on hardened surfaces consisting of portland cement concrete, asphalt concrete, or cement treated material.

• In placing aggregates in storage or in moving the aggregates from storage to the weigh hopper of the batching plant, any method that may cause segregation, degradation, or the combining of materials of different gradings that will result in any size of aggregate at the weigh hopper failing to meet the grading requirements shall be discontinued. Any method of handling aggregates that results in excessive breakage of particles shall be discontinued. The use of suitable devices to reduce impact of falling aggregates may be required by the Engineer.

90-5.02 PROPORTIONING DEVICES

• Weighing, measuring, or metering devices used for proportioning materials shall conform to the requirements in Section 9-1.01, "Measurement of Quantities," and this Section 90-5.02. In addition, automatic weighing systems shall comply with the requirements for automatic proportioning devices in Section 90-5.03A, "Proportioning for Pavement." Automatic devices shall be automatic to the extent that the only manual operation required for proportioning the aggregates, cement, and supplementary cementitious material for one batch of concrete is a single operation of a switch or starter.

• Proportioning devices shall be tested as frequently as the Engineer may deem necessary to ensure their accuracy.

• Weighing equipment shall be insulated against vibration or movement of other operating equipment in the plant. When the plant is in operation, the mass of each batch of material shall not vary from the mass designated by the Engineer by more than the tolerances specified herein.

• Equipment for cumulative weighing of aggregate shall have a zero tolerance of ±0.5 percent of the designated total batch mass of the aggregate. For systems with individual weigh hoppers for the various sizes of aggregate, the zero tolerance shall be ±0.5 percent of the individual batch mass designated for each size of aggregate. Equipment for cumulative weighing of cement and supplementary cementitious material shall have a zero tolerance of ±0.5 percent of the designated total batch mass of the cement and supplementary cementitious material. Equipment for weighing cement or supplementary cementitious material separately shall have a zero tolerance of ±0.5 percent of their designated individual batch masses. Equipment for measuring water shall have a zero tolerance of ±0.5 percent of its designated mass or volume.

• The mass indicated for any batch of material shall not vary from the preselected scale setting by more than the following:

A. Aggregate weighed cumulatively shall be within 1.0 percent of the designated total batch mass of the aggregate. Aggregates weighed individually shall be within 1.5 percent of their respective designated batch masses; and

CONTRACT NO. 04-0120R4

CONTRACT CHANGE ORDER NO 108

SHEET 131 OF 267

B. Cement shall be 99 to 102 percent of its designated batch mass. When weighed individually, supplementary cementitious material shall be 99 to 102 percent of its designated batch mass. When supplementary cementitious material and cement are permitted to be weighed cumulatively, cement shall be weighed first to 99 to 102 percent of its designated batch mass, and the total for cement and supplementary cementitious material shall be 99 to 102 percent of the sum of their designated batch masses; and
C. Water shall be within 1.5 percent of its designated mass or volume.

• Each scale graduation shall be approximately 0.001 of the total capacity of the scale. The capacity of scales for weighing cement, supplementary cementitious material, or cement plus supplementary cementitious material and aggregates shall not exceed that of commercially available scales having single graduations indicating a mass not exceeding the maximum permissible mass variation above, except that no scale shall be required having a capacity of less than 500 kg, with 0.5-kg graduations.

90-5.03 PROPORTIONING

• Proportioning shall consist of dividing the aggregates into the specified sizes, each stored in a separate bin, and combining them with cementitious material and water as provided in these specifications. Aggregates shall be proportioned by mass.

• At the time of batching, aggregates shall have been dried or drained sufficiently to result in a stable moisture content such that no visible separation of water from aggregate will take place during transportation from the proportioning plant to the point of mixing. In no event shall the free moisture content of the fine aggregate at the time of batching exceed 8 percent of its saturated, surface-dry mass.

• Should separate supplies of aggregate material of the same size group, but of different moisture content or specific gravity or surface characteristics affecting workability, be available at the proportioning plant, withdrawals shall be made from one supply exclusively and the materials therein completely exhausted before starting upon another.

• Bulk Type IP (MS) cement shall be weighed in an individual hopper and shall be kept separate from the aggregates until the ingredients are released for discharge into the mixer.

• Bulk cement and supplementary cementitious material may be weighed in separate, individual weigh hoppers or may be weighed in the same weigh hopper and shall be kept separate from the aggregates until the ingredients are released for discharge into the mixer. If the cement and supplementary cementitious material are weighed cumulatively, the cement shall be weighed first.

• If cement and supplementary cementitious material are weighed in separate weigh hoppers, the weigh systems for the proportioning of the aggregate, the cement, and the supplementary cementitious material shall be individual and distinct from all other weigh systems. Each weigh system shall be equipped with a hopper, a lever system, and an indicator to constitute an individual and independent material weighing device. The cement and the supplementary cementitious material shall be discharged into the mixer simultaneously with the aggregate.

• The scales and weigh hoppers for bulk weighing cement, supplementary cementitious material, or cement plus supplementary cementitious material shall be separate and distinct from the aggregate weighing equipment.

• For batches of one cubic meter or more, the batching equipment shall conform to one of the following combinations:

CONTRACT NO. 04-012024

CONTRACT CHANGE ORDER NO 108

SHEET 132 OF 267

A. Separate boxes and separate scale and indicator for weighing each size of aggregate.
B. Single box and scale indicator for all aggregates.
C. Single box or separate boxes and automatic weighing mechanism for all aggregates.

• In order to check the accuracy of batch masses, the gross mass and tare mass of batch trucks, truck mixers, truck agitators, and non-agitating hauling equipment shall be determined when ordered by the Engineer. The equipment shall be weighed on scales designated by the Engineer.

90-5.03A PROPORTIONING FOR PAVEMENT

• Aggregates and bulk supplementary cementitious material for use in pavement shall be proportioned by mass by means of automatic proportioning devices of approved type conforming to these specifications.

• The Contractor shall install and maintain in operating condition an electronically actuated moisture meter that will indicate, on a readily visible scale, changes in the moisture content of the fine aggregate as it is batched within a sensitivity of 0.5 percent by mass of the fine aggregate.

• The batching of cement, supplementary cementitious material, or cement plus supplementary cementitious material and aggregate shall be interlocked so that a new batch cannot be started until all weigh hoppers are empty, the proportioning devices are within zero tolerance, and the discharge gates are closed. The interlock shall permit no part of the batch to be discharged until all aggregate hoppers and the cement and supplementary cementitious material hoppers or the cement plus supplementary cementitious material hopper are charged with masses that are within the tolerances specified in Section 90-5.02, "Proportioning Devices."

• If interlocks are required for cement and supplementary cementitious material charging mechanisms and cement and supplementary cementitious material are weighed cumulatively, their charging mechanisms shall be interlocked to prevent the introduction of mineral admixture until the mass of cement in the cement weigh hopper is within the tolerances specified in Section 90-5.02, "Proportioning Devices."

• If concrete is completely mixed in stationary paving mixers, the supplementary cementitious materials shall be weighed in a separate weigh hopper and the supplementary cementitious material and cement shall be introduced simultaneously into the mixer proportionately with the aggregate. If the Contractor provides certification that the stationary mixer is capable of mixing the cement, supplementary cementitious material, aggregates, and water uniformly before discharge, weighing the supplementary cementitious material cumulatively with the cement is permitted. Certification shall contain the following:

A. Test results for 2 compressive strength test cylinders of concrete taken within the first one-third and 2 compressive strength test cylinders of concrete taken within the last one-third of the concrete discharged from a single batch from the stationary paving mixer. Strength tests and cylinder preparation will be in conformance with the provisions of Section 90-9, "Compressive Strength";
B. Calculations demonstrating that the difference in the averages of 2 compressive strengths taken in the first one-third is no greater than 7.5 percent different than the averages of 2 compressive strengths taken in the last one-third of the concrete discharged from a single batch from the stationary paving mixer. Strength tests and cylinder preparation will be in conformance with the provisions of Section 90-9, "Compressive Strength;" and

CONTRACT NO. 04-012024

CONTRACT CHANGE ORDER NO 1085

SHEET 133 OF 267

C. The mixer rotation speed and time of mixing before discharge that are required to produce a mix that meets the requirements above.

- The discharge gate on the cement and supplementary cementitious material hoppers or the cement plus supplementary cementitious material hopper shall be designed to permit regulating the flow of cement, supplementary cementitious material, or cement plus supplementary cementitious material into the aggregate as directed by the Engineer.
- If separate weigh boxes are used for each size of aggregate, the discharge gates shall permit regulating the flow of each size of aggregate as directed by the Engineer.
- Material discharged from the several bins shall be controlled by gates or by mechanical conveyors. The means of withdrawal from the several bins, and of discharge from the weigh box, shall be interlocked so that not more than one bin can discharge at a time, and so that the weigh box cannot be tripped until the required quantity from each of the several bins has been deposited therein. Should a separate weigh box be used for each size of aggregate, all may be operated and discharged simultaneously.
- If the discharge from the several bins is controlled by gates, each gate shall be actuated automatically so that the required mass is discharged into the weigh box, after which the gate shall automatically close and lock.
- The automatic weighing system shall be designed so that all proportions required may be set on the weighing controller at the same time.

90-6 MIXING AND TRANSPORTING

90-6.01 GENERAL

- Concrete shall be mixed in mechanically operated mixers, except that when permitted by the Engineer, batches not exceeding 0.25-m^3 may be mixed by hand methods in conformance with the provisions in Section 90-6.05, "Hand-Mixing."
- Equipment having components made of aluminum or magnesium alloys that would have contact with plastic concrete during mixing, transporting, or pumping of portland cement concrete shall not be used.
- Concrete shall be homogeneous and thoroughly mixed, and there shall be no lumps or evidence of undispersed cementitious material.
- Uniformity of concrete mixtures will be determined by differences in penetration as determined by California Test 533, or slump as determined by ASTM Designation: C 143, and by variations in the proportion of coarse aggregate as determined by California Test 529.
- When the mix design specifies a penetration value, the difference in penetration, determined by comparing penetration tests on 2 samples of mixed concrete from the same batch or truck mixer load, shall not exceed 10 mm. When the mix design specifies a slump value, the difference in slump, determined by comparing slump tests on 2 samples of mixed concrete from the same batch or truck mixer load, shall not exceed the values given in the table below. Variation in the proportion of coarse aggregate will be determined by comparing the results of tests of 2 samples of mixed concrete from the same batch or truck mixer load and the difference between the 2 results shall not exceed 100 kg per cubic meter of concrete.

Average Slump	Maximum Permissible Difference
Less than 100-mm	25-mm
100-mm to 150-mm	38-mm
Greater than 150-mm to 225-mm	50-mm

CONTRACT NO. 04-012024

CONTRACT CHANGE ORDER NO 108

SHEET 134 OF 267

• The Contractor shall furnish samples of the freshly mixed concrete and provide satisfactory facilities for obtaining the samples.

90-6.02 MACHINE MIXING

• Concrete mixers may be of the revolving drum or the revolving blade type, and the mixing drum or blades shall be operated uniformly at the mixing speed recommended by the manufacturer. Mixers and agitators that have an accumulation of hard concrete or mortar shall not be used.

• The temperature of mixed concrete, immediately before placing, shall be not less than 10°C or more than 32°C. Aggregates and water shall be heated or cooled as necessary to produce concrete within these temperature limits. Neither aggregates nor mixing water shall be heated to exceed 65°C. If ice is used to cool the concrete, discharge of the mixer will not be permitted until all ice is melted.

• The batch shall be so charged into the mixer that some water will enter in advance of cementitious materials and aggregates. All water shall be in the drum by the end of the first one-fourth of the specified mixing time.

• Cementitious materials shall be batched and charged into the mixer by means that will not result either in loss of cementitious materials due to the effect of wind, in accumulation of cementitious materials on surfaces of conveyors or hoppers, or in other conditions that reduce or vary the required quantity of cementitious material in the concrete mixture.

• Paving and stationary mixers shall be operated with an automatic timing device. The timing device and discharge mechanism shall be interlocked so that during normal operation no part of the batch will be discharged until the specified mixing time has elapsed.

• The total elapsed time between the intermingling of damp aggregates and all cementitious materials and the start of mixing shall not exceed 30 minutes.

• The size of batch shall not exceed the manufacturer's guaranteed capacity.

• When producing concrete for pavement or base, suitable batch counters shall be installed and maintained in good operating condition at job site batching plants and stationary mixers. The batch counters shall indicate the exact number of batches proportioned and mixed.

• Concrete shall be mixed and delivered to the job site by means of one of the following combinations of operations:

A. Mixed completely in a stationary mixer and the mixed concrete transported to the point of delivery in truck agitators or in nonagitating hauling equipment (central-mixed concrete).
B. Mixed partially in a stationary mixer, and the mixing completed in a truck mixer (shrink-mixed concrete).
C. Mixed completely in a truck mixer (transit-mixed concrete).
D. Mixed completely in a paving mixer.

• Agitators may be truck mixers operating at agitating speed or truck agitators. Each mixer and agitator shall have attached thereto in a prominent place a metal plate or plates on which is plainly marked the various uses for which the equipment is designed, the manufacturer's guaranteed capacity of the drum or container in terms of the volume of mixed concrete and the speed of rotation of the mixing drum or blades.

• Truck mixers shall be equipped with electrically or mechanically actuated revolution counters by which the number of revolutions of the drum or blades may readily be verified.

• When shrink-mixed concrete is furnished, concrete that has been partially mixed at a central plant shall be transferred to a truck mixer and all requirements for transit-mixed concrete

CONTRACT NO. 04-0120R4

CONTRACT CHANGE ORDER NO 108

SHEET 135 OF 267

shall apply. No credit in the number of revolutions at mixing speed will be allowed for partial mixing in a central plant.

90-6.03 TRANSPORTING MIXED CONCRETE

- Mixed concrete may be transported to the delivery point in truck agitators or truck mixers operating at the speed designated by the manufacturer of the equipment as agitating speed, or in nonagitating hauling equipment, provided the consistency and workability of the mixed concrete upon discharge at the delivery point is suitable for adequate placement and consolidation in place, and provided the mixed concrete after hauling to the delivery point conforms to the provisions in Section 90-6.01, "General."
- Truck agitators shall be loaded not to exceed the manufacturer's guaranteed capacity and shall maintain the mixed concrete in a thoroughly mixed and uniform mass during hauling.
- Bodies of nonagitating hauling equipment shall be constructed so that leakage of the concrete mix, or any part thereof, will not occur at any time.
- Concrete hauled in open-top vehicles shall be protected during hauling against rain or against exposure to the sun for more than 20 minutes when the ambient temperature exceeds 24°C.
- No additional mixing water shall be incorporated into the concrete during hauling or after arrival at the delivery point, unless authorized by the Engineer. If the Engineer authorizes additional water to be incorporated into the concrete, the drum shall be revolved not less than 30 revolutions at mixing speed after the water is added and before discharge is commenced.
- The rate of discharge of mixed concrete from truck mixer-agitators shall be controlled by the speed of rotation of the drum in the discharge direction with the discharge gate fully open.
- If a truck mixer or agitator is used for transporting concrete to the delivery point, discharge shall be completed within 1.5 hours or before 250 revolutions of the drum or blades, whichever occurs first, after the introduction of the cement to the aggregates. Under conditions contributing to quick stiffening of the concrete, or if the temperature of the concrete is 30°C or above, the time allowed may be less than 1.5 hours. If an admixture is used to retard the set time, the temperature of the concrete shall not exceed 30°C, the time limit shall be 2 hours, and the revolution limitation shall be 300.
- If nonagitating hauling equipment is used for transporting concrete to the delivery point, discharge shall be completed within one hour after the addition of the cement to the aggregates. Under conditions contributing to quick stiffening of the concrete, or when the temperature of the concrete is 30°C or above, the time between the introduction of cement to the aggregates and discharge shall not exceed 45 minutes.
- Each load of concrete delivered at the job site shall be accompanied by a weighmaster certificate showing the mix identification number, nonrepeating load number, date and time at which the materials were batched, the total amount of water added to the load, and for transit-mixed concrete, the reading of the revolution counter at the time the truck mixer is charged with cement. This weighmaster certificate shall also show the actual scale masses (kilograms) for the ingredients batched. Theoretical or target batch masses shall not be used as a substitute for actual scale masses.
- Weighmaster certificates shall be provided in printed form, or if approved by the Engineer, the data may be submitted in electronic media. Electronic media shall be presented in a tab-delimited format on a 90 mm diskette with a capacity of at least 1.4 megabytes. Captured data, for the ingredients represented by each batch shall be "line feed, carriage return" (LFCR) and "one line, separate record" with allowances for sufficient fields to satisfy the amount of data required by these specifications.

CONTRACT NO. 04-012024

CONTRACT CHANGE ORDER NO 108

SHEET 130 OF 267

• The Contractor may furnish a weighmaster certificate accompanied by a separate certificate that lists the actual batch masses or measurements for a load of concrete provided that both certificates are imprinted with the same nonrepeating load number that is unique to the contract and delivered to the job site with the load.

• Weighmaster certificates furnished by the Contractor shall conform to the provisions in Section 9-1.01, "Measurement of Quantities."

90-6.04 TIME OR AMOUNT OF MIXING

• Mixing of concrete in paving or stationary mixers shall continue for the required mixing time after all ingredients, except water and admixture, if added with the water, are in the mixing compartment of the mixer before any part of the batch is released. Transfer time in multiple drum mixers shall not be counted as part of the required mixing time.

• The required mixing time, in paving or stationary mixers, of concrete used for concrete structures, except minor structures, shall be not less than 90 seconds or more than 5 minutes, except that when directed by the Engineer in writing, the requirements of the following paragraph shall apply.

• The required mixing time, in paving or stationary mixers, except as provided in the preceding paragraph, shall be not less than 50 seconds or more than 5 minutes.

• The minimum required revolutions at the mixing speed for transit-mixed concrete shall not be less than that recommended by the mixer manufacturer, but in no case shall the number of revolutions be less than that required to consistently produce concrete conforming to the provisions for uniformity in Section 90-6.01, "General."

• When a high range water-reducing admixture is added to the concrete at the job site, the total number of revolutions shall not exceed 300.

90-6.05 HAND-MIXING

• Hand-mixed concrete shall be made in batches of not more than 0.25-m^3 and shall be mixed on a watertight, level platform. The proper amount of coarse aggregate shall be measured in measuring boxes and spread on the platform and the fine aggregate shall be spread on this layer, the 2 layers being not more than 0.3-meters in total depth. On this mixture shall be spread the dry cementitious materials and the whole mass turned no fewer than 2 times dry; then sufficient clean water shall be added, evenly distributed, and the whole mass again turned no fewer than 3 times, not including placing in the carriers or forms.

90-6.06 AMOUNT OF WATER AND PENETRATION

• The amount of water used in concrete mixes shall be regulated so that the penetration of the concrete as determined by California Test 533 or the slump of the concrete as determined by ASTM Designation: C 143 is within the nominal values shown in the following table. When the penetration or slump of the concrete is found to exceed the nominal values listed, the mixture of subsequent batches shall be adjusted to reduce the penetration or slump to a value within the nominal range shown. Batches of concrete with a penetration or slump exceeding the maximum values listed shall not be used in the work. If Type F or Type G chemical admixtures are added to the mix, the penetration requirements shall not apply and the slump shall not exceed 225 mm after the chemical admixtures are added.

CONTRACT NO. 04-0V2024

CONTRACT CHANGE ORDER NO 108

SHEET 137 OF 267

Type of Work	Nominal		Maximum	
	Penetration (mm)	Slump (mm)	Penetration (mm)	Slump (mm)
Concrete Pavement	0 - 25	—	40	—
Non-reinforced concrete facilities	0 - 35	—	50	—
Reinforced concrete structures				
Sections over 300-mm thick	0 - 35	—	65	—
Sections 300-mm thick or less	0 - 50	—	75	—
Concrete placed under water	—	150 - 200	—	225
Cast-in-place concrete piles	65 - 90	130 - 180	100	200

• The amount of free water used in concrete shall not exceed 183 kg/m^3, plus 20 kg for each required 100 kg of cementitious material in excess of 325 kg/m^3.

• The term free water is defined as the total water in the mixture minus the water absorbed by the aggregates in reaching a saturated surface-dry condition.

• If there are adverse or difficult conditions that affect the placing of concrete, the above specified penetration and free water content limitations may be exceeded providing the Contractor is granted permission by the Engineer in writing to increase the cementitious material content per cubic meter of concrete. The increase in water and cementitious material shall be at a ratio not to exceed 30 kg of water per added 100 kg of cementitious material per cubic meter. Full compensation for additional cementitious material and water added under these conditions shall be considered as included in the contract price paid for the concrete work involved and no additional compensation will be allowed therefor.

• The equipment for supplying water to the mixer shall be constructed and arranged so that the amount of water added can be measured accurately. Any method of discharging water into the mixer for a batch shall be accurate within 1.5 percent of the quantity of water required to be added to the mix for any position of the mixer. Tanks used to measure water shall be designed so that water cannot enter while water is being discharged into the mixer and discharge into the mixer shall be made rapidly in one operation without dribbling. All equipment shall be arranged so as to permit checking the amount of water delivered by discharging into measured containers.

90-7 CURING CONCRETE

90-7.01 METHODS OF CURING

• Newly placed concrete shall be cured by the methods specified in this Section 90-7.01 and the special provisions.

90-7.01A WATER METHOD

• The concrete shall be kept continuously wet by the application of water for a minimum curing period of 7 days after the concrete has been placed.

• Cotton mats, rugs, carpets, or earth or sand blankets may be used as a curing medium to retain the moisture during the curing period.

• If a curing medium consisting of cotton mats, rugs, carpets, polyethylene sheeting, polyethylene sheeting on burlap, or earth or sand blankets is to be used to retain the moisture, the entire surface of the concrete shall be kept damp by applying water with a nozzle that so atomizes the flow that a mist and not a spray is formed, until the surface of the concrete is covered with the curing medium. The moisture from the nozzle shall not be applied under pressure directly upon the concrete and shall not be allowed to accumulate on the concrete in a

CONTRACT NO. 04-0K204R4

CONTRACT CHANGE ORDER NO 1058

SHEET 136 OF 267

quantity sufficient to cause a flow or wash the surface. At the expiration of the curing period, the concrete surfaces shall be cleared of all curing media.

• At the option of the Contractor, a curing medium consisting of white opaque polyethylene sheeting extruded onto burlap may be used to cure concrete structures. The polyethylene sheeting shall have a minimum thickness of 100 µm, and shall be extruded onto 283.5-gram burlap.

• At the option of the Contractor, a curing medium consisting of polyethylene sheeting may be used to cure concrete columns. The polyethylene sheeting shall have a minimum thickness of 250 µm achieved in a single layer of material.

• If the Contractor chooses to use polyethylene sheeting or polyethylene sheeting on burlap as a curing medium, these media and any joints therein shall be secured as necessary to provide moisture retention and shall be within 75 mm of the concrete at all points along the surface being cured. When these media are used, the temperature of the concrete shall be monitored during curing. If the temperature of the concrete cannot be maintained below 60°C, use of these curing media shall be disallowed.

• When concrete bridge decks and flat slabs are to be cured without the use of a curing medium, the entire surface of the bridge deck or slab shall be kept damp by the application of water with an atomizing nozzle as specified above, until the concrete has set, after which the entire surface of the concrete shall be sprinkled continuously with water for a period of not less than 7 days.

90-7.01B CURING COMPOUND METHOD

• Surfaces of the concrete that are exposed to the air shall be sprayed uniformly with a curing compound.

• Curing compounds to be used shall be as follows:

1. Pigmented curing compound conforming to the requirements in ASTM Designation: C 309, Type 2, Class B, except the resin type shall be poly-alpha-methylstyrene.
2. Pigmented curing compound conforming to the requirements in ASTM Designation: C 309, Type 2, Class B.
3. Pigmented curing compound conforming to the requirements in ASTM Designation: C 309, Type 2, Class A.
4. Nonpigmented curing compound conforming to the requirements in ASTM Designation: C 309, Type 1, Class B.
5. Nonpigmented curing compound conforming to the requirements in ASTM Designation: C 309, Type 1, Class A.
6. Nonpigmented curing compound with fugitive dye conforming to the requirements in ASTM Designation: C 309, Type 1-D, Class A.

• The infrared scan for the dried vehicle from curing compound (1) shall match the infrared scan on file at the Transportation Laboratory.

• The loss of water for each type of curing compound, when tested in conformance with the requirements in California Test 534, shall not be more than 0.15-kg/m^2 in 24 hours.

• The curing compound to be used will be specified elsewhere in these specifications or in the special provisions.

• If the use of curing compound is required or permitted elsewhere in these specifications or in the special provisions and no specific kind is specified, any of the curing compounds listed above may be used.

CONTRACT NO. 04-012024

CONTRACT CHANGE ORDER NO 108

SHEET 139 OF 207

- Curing compound shall be applied at a nominal rate of 3.7 m^2/L, unless otherwise specified.
- At any point, the application rate shall be within ±1.2 m^2/L of the nominal rate specified, and the average application rate shall be within ±0.5 m^2/L of the nominal rate specified when tested in conformance with the requirements in California Test 535. Runs, sags, thin areas, skips, or holidays in the applied curing compound shall be evidence that the application is not satisfactory.
- Curing compounds shall be applied using power operated spray equipment. The power operated spraying equipment shall be equipped with an operational pressure gage and a means of controlling the pressure. Hand spraying of small and irregular areas that are not reasonably accessible to mechanical spraying equipment, in the opinion of the Engineer, may be permitted.
- The curing compound shall be applied to the concrete following the surface finishing operation, immediately before the moisture sheen disappears from the surface, but before any drying shrinkage or craze cracks begin to appear. In the event of any drying or cracking of the surface, application of water with an atomizing nozzle as specified in Section 90-7.01A, "Water Method," shall be started immediately and shall be continued until application of the compound is resumed or started; however, the compound shall not be applied over any resulting freestanding water. Should the film of compound be damaged from any cause before the expiration of 7 days after the concrete is placed in the case of structures and 72 hours in the case of pavement, the damaged portion shall be repaired immediately with additional compound.
- At the time of use, compounds containing pigments shall be in a thoroughly mixed condition with the pigment uniformly dispersed throughout the vehicle. A paddle shall be used to loosen all settled pigment from the bottom of the container, and a power driven agitator shall be used to disperse the pigment uniformly throughout the vehicle.
- Agitation shall not introduce air or other foreign substance into the curing compound.
- The manufacturer shall include in the curing compound the necessary additives for control of sagging, pigment settling, leveling, de-emulsification, or other requisite qualities of a satisfactory working material. Pigmented curing compounds shall be manufactured so that the pigment does not settle badly, does not cake or thicken in the container, and does not become granular or curdled. Settlement of pigment shall be a thoroughly wetted, soft, mushy mass permitting the complete and easy vertical penetration of a paddle. Settled pigment shall be easily redispersed, with minimum resistance to the sideways manual motion of the paddle across the bottom of the container, to form a smooth uniform product of the proper consistency.
- Curing compounds shall remain sprayable at temperatures above 4°C and shall not be diluted or altered after manufacture.
- The curing compound shall be packaged in clean 1040-L totes, 210-L barrels, or 19-L pails, or shall be supplied from a suitable storage tank located at the job site. The containers shall comply with "Title 49, Code of Federal Regulations, Hazardous Materials Regulations." The 1040-L totes and the 210-L barrels shall have removable lids and airtight fasteners. The 19-L pails shall be round and have standard full open head and bail. Lids with bungholes will not be permitted. Settling or separation of solids in containers, except tanks, must be completely redispersed with low speed mixing prior to use, in conformance with these specifications and the manufacturer's recommendations. Mixing shall be accomplished either manually by use of a paddle or by use of a mixing blade driven by a drill motor, at low speed. Mixing blades shall be the type used for mixing paint. On-site storage tanks shall be kept clean and free of contaminants. Each tank shall have a permanent system designed to completely redisperse settled material without introducing air or other foreign substances.

CONTRACT NO. 04-012024

CONTRACT CHANGE ORDER NO 108

SHEET 140 OF 267

- Steel containers and lids shall be lined with a coating that will prevent destructive action by the compound or chemical agents in the air space above the compound. The coating shall not come off the container or lid as skins. Containers shall be filled in a manner that will prevent skinning. Plastic containers shall not react with the compound.
- Each container shall be labeled with the manufacturer's name, kind of curing compound, batch number, volume, date of manufacture, and volatile organic compound (VOC) content. The label shall also warn that the curing compound containing pigment shall be well stirred before use. Precautions concerning the handling and the application of curing compound shall be shown on the label of the curing compound containers in conformance with the Construction Safety Orders and General Industry Safety Orders of the State.
- Containers of curing compound shall be labeled to indicate that the contents fully comply with the rules and regulations concerning air pollution control in the State.
- When the curing compound is shipped in tanks or tank trucks, a shipping invoice shall accompany each load. The invoice shall contain the same information as that required herein for container labels.
- Curing compound will be sampled by the Engineer at the source of supply, at the job site, or at both locations.
- Curing compound shall be formulated so as to maintain the specified properties for a minimum of one year. The Engineer may require additional testing before use to determine compliance with these specifications if the compound has not been used within one year or whenever the Engineer has reason to believe the compound is no longer satisfactory.
- Tests will be conducted in conformance with the latest ASTM test methods and methods in use by the Transportation Laboratory.

90-7.01C WATERPROOF MEMBRANE METHOD

- The exposed finished surfaces of concrete shall be sprayed with water, using a nozzle that so atomizes the flow that a mist and not a spray is formed, until the concrete has set, after which the curing membrane, shall be placed. The curing membrane shall remain in place for a period of not less than 72 hours.
- Sheeting material for curing concrete shall conform to the requirements in AASHTO Designation: M 171 for white reflective materials.
- The sheeting material shall be fabricated into sheets of such width as to provide a complete cover for the entire concrete surface. Joints in the sheets shall be securely cemented together in such a manner as to provide a waterproof joint. The joint seams shall have a minimum lap of 100 mm.
- The sheets shall be securely weighted down by placing a bank of earth on the edges of the sheets or by other means satisfactory to the Engineer.
- Should any portion of the sheets be broken or damaged before the expiration of 72 hours after being placed, the broken or damaged portions shall be immediately repaired with new sheets properly cemented into place.
- Sections of membrane that have lost their waterproof qualities or have been damaged to such an extent as to render them unfit for curing the concrete shall not be used.

90-7.01D FORMS-IN-PLACE METHOD

- Formed surfaces of concrete may be cured by retaining the forms in place. The forms shall remain in place for a minimum period of 7 days after the concrete has been placed, except

CONTRACT NO. 04-012024

CONTRACT CHANGE ORDER NO 108

SHEET 141 OF 267

that for members over 0.5-m in least dimension the forms shall remain in place for a minimum period of 5 days.

• Joints in the forms and the joints between the end of forms and concrete shall be kept moisture tight during the curing period. Cracks in the forms and cracks between the forms and the concrete shall be resealed by methods subject to the approval of the Engineer.

90-7.02 CURING PAVEMENT

• The entire exposed area of the pavement, including edges, shall be cured by the waterproof membrane method, or curing compound method using curing compound (1) or (2) as the Contractor may elect. Should the side forms be removed before the expiration of 72 hours following the start of curing, the exposed pavement edges shall also be cured. If the pavement is cured by means of the curing compound method, the sawcut and all portions of the curing compound that have been disturbed by sawing operations shall be restored by spraying with additional curing compound.

• Curing shall commence as soon as the finishing process provided in Section 40-1.10, "Final Finishing," has been completed. The method selected shall conform to the provisions in Section 90-7.01, "Methods of Curing."

• When the curing compound method is used, the compound shall be applied to the entire pavement surface by mechanical sprayers. Spraying equipment shall be of the fully atomizing type equipped with a tank agitator that provides for continual agitation of the curing compound during the time of application. The spray shall be adequately protected against wind, and the nozzles shall be so oriented or moved mechanically transversely as to result in the minimum specified rate of coverage being applied uniformly on exposed faces. Hand spraying of small and irregular areas, and areas inaccessible to mechanical spraying equipment, in the opinion of the Engineer, will be permitted. When the ambient air temperature is above 15°C, the Contractor shall fog the surface of the concrete with a fine spray of water as specified in Section 90-7.01A, "Water Method." The surface of the pavement shall be kept moist between the hours of 10:00 a.m. and 4:30 p.m. on the day the concrete is placed. However, the fogging done after the curing compound has been applied shall not begin until the compound has set sufficiently to prevent displacement. Fogging shall be discontinued if ordered in writing by the Engineer.

90-7.03 CURING STRUCTURES

• Newly placed concrete for cast-in-place structures, other than highway bridge decks, shall be cured by the water method, the forms-in-place method, or, as permitted herein, by the curing compound method, in conformance with the provisions in Section 90-7.01, "Methods of Curing."

• The curing compound method using a pigmented curing compound may be used on concrete surfaces of construction joints, surfaces that are to be buried underground, and surfaces where only ordinary surface finish is to be applied and on which a uniform color is not required and that will not be visible from a public traveled way. If the Contractor elects to use the curing compound method on the bottom slab of box girder spans, the curing compound shall be curing compound (1).

• The top surface of highway bridge decks shall be cured by both the curing compound method and the water method. The curing compound shall be curing compound (1).

• Concrete surfaces of minor structures, as defined in Section 51-1.02, "Minor Structures," shall be cured by the water method, the forms-in-place method or the curing compound method.

• When deemed necessary by the Engineer during periods of hot weather, water shall be applied to concrete surfaces being cured by the curing compound method or by the

CONTRACT NO. 04-0120R4

CONTRACT CHANGE ORDER NO 108

SHEET 142 OF 267

forms-in-place method, until the Engineer determines that a cooling effect is no longer required. Application of water for this purpose will be paid for as extra work as provided in Section 4-1.03D, "Extra Work."

90-7.04 CURING PRECAST CONCRETE MEMBERS

• Precast concrete members shall be cured in conformance with any of the methods specified in Section 90-7.01, "Methods of Curing." Curing shall be provided for the minimum time specified for each method or until the concrete reaches its design strength, whichever is less. Steam curing may also be used for precast members and shall conform to the following provisions:

A. After placement of the concrete, members shall be held for a minimum 4-hour presteaming period. If the ambient air temperature is below 10°C, steam shall be applied during the presteaming period to hold the air surrounding the member at a temperature between 10°C and 32°C.
B. To prevent moisture loss on exposed surfaces during the presteaming period, members shall be covered as soon as possible after casting or the exposed surfaces shall be kept wet by fog spray or wet blankets.
C. Enclosures for steam curing shall allow free circulation of steam about the member and shall be constructed to contain the live steam with a minimum moisture loss. The use of tarpaulins or similar flexible covers will be permitted, provided they are kept in good repair and secured in such a manner as to prevent the loss of steam and moisture.
D. Steam at the jets shall be at low pressure and in a saturated condition. Steam jets shall not impinge directly on the concrete, test cylinders, or forms. During application of the steam, the temperature rise within the enclosure shall not exceed 22°C per hour. The curing temperature throughout the enclosure shall not exceed 65°C and shall be maintained at a constant level for a sufficient time necessary to develop the required transfer strength. Control cylinders shall be covered to prevent moisture loss and shall be placed in a location where temperature is representative of the average temperature of the enclosure.
E. Temperature recording devices that will provide an accurate, continuous, permanent record of the curing temperature shall be provided. A minimum of one temperature recording device per 60 m of continuous bed length will be required for checking temperature.
F. Members in pretension beds shall be detensioned immediately after the termination of steam curing while the concrete and forms are still warm, or the temperature under the enclosure shall be maintained above 15°C until the stress is transferred to the concrete.
G. Curing of precast concrete will be considered completed after termination of the steam curing cycle.

90-7.05 CURING PRECAST PRESTRESSED CONCRETE PILES

• Newly placed concrete for precast prestressed concrete piles shall be cured in conformance with the provisions in Section 90-7.04, "Curing Precast Concrete Members," except that piles in a corrosive environment shall be cured as follows:

A. Piles shall be either steam cured or water cured. If water curing is used, the piles shall be kept continuously wet by the application of water in conformance with the provisions in Section 90-7.01A, "Water Method."

CONTRACT NO. 04-012024

CONTRACT CHANGE ORDER NO 108

SHEET 143 OF 267

B. If steam curing is used, the steam curing provisions in Section 90-7.04, "Curing Precast Concrete Members," shall apply except that the piles shall be kept continuously wet for their entire length for a period of not less than 3 days, including the holding and steam curing periods.

90-7.06 CURING SLOPE PROTECTION

• Concrete slope protection shall be cured in conformance with any of the methods specified in Section 90-7.01, "Methods of Curing."

• Concreted-rock slope protection shall be cured in conformance with any of the methods specified in Section 90-7.01, "Methods of Curing," with a blanket of earth kept wet for 72 hours, or by sprinkling with a fine spray of water every 2 hours during the daytime for a period of 3 days.

90-7.07 CURING MISCELLANEOUS CONCRETE WORK

• Exposed surfaces of curbs shall be cured by pigmented curing compounds as specified in Section 90-7.01B, "Curing Compound Method."

• Concrete sidewalks, gutter depressions, island paving, curb ramps, driveways, and other miscellaneous concrete areas shall be cured in conformance with any of the methods specified in Section 90-7.01, "Methods of Curing."

• Shotcrete shall be cured for at least 72 hours by spraying with water, by a moist earth blanket, or by any of the methods provided in Section 90-7.01, "Methods of Curing."

• Mortar and grout shall be cured by keeping the surface damp for 3 days.

• After placing, the exposed surfaces of sign structure foundations, including pedestal portions, if constructed, shall be cured for at least 72 hours by spraying with water, by a moist earth blanket, or by any of the methods provided in Section 90-7.01, "Methods of Curing."

90-8 PROTECTING CONCRETE

90-8.01 GENERAL

• In addition to the provisions in Section 7-1.16, "Contractor's Responsibility for the Work and Materials," the Contractor shall protect concrete as provided in this Section 90-8. If required by the Engineer, the Contractor shall submit a written outline of the proposed methods for protecting the concrete.

• The Contractor shall protect concrete from damage from any cause, which shall include, but not be limited to: rain, heat, cold, wind, Contractor's actions, and actions of others.

• Concrete shall not be placed on frozen or ice-coated ground or subgrade nor on ice-coated forms, reinforcing steel, structural steel, conduits, precast members, or construction joints.

• Under rainy conditions, placing of concrete shall be stopped before the quantity of surface water is sufficient to damage surface mortar or cause a flow or wash of the concrete surface, unless the Contractor provides adequate protection against damage.

• Concrete that has been frozen or damaged by other causes, as determined by the Engineer, shall be removed and replaced by the Contractor at the Contractor's expense.

90-8.02 PROTECTING CONCRETE STRUCTURES

• Structure concrete and shotcrete used as structure concrete shall be maintained at a temperature of not less than 7°C for 72 hours after placing and at not less than 4°C for an additional 4 days.

CONTRACT NO. 04-012024

CONTRACT CHANGE ORDER NO 108

SHEET 144 OF 267

90-8.03 PROTECTING CONCRETE PAVEMENT

• Pavement concrete shall be maintained at a temperature of not less than 4°C for 72 hours.

• Except as provided in Section 7-1.08, "Public Convenience," the Contractor shall protect concrete pavement against construction and other activities that abrade, scar, discolor, reduce texture depth, lower coefficient of friction, or otherwise damage the surface. Stockpiling, drifting, or excessive spillage of soil, gravel, petroleum products, and concrete or asphalt mixes on the surface of concrete pavement is prohibited unless otherwise specified in these specifications, the special provisions or permitted by the Engineer.

• If ordered by the Engineer or shown on the plans or specified in the special provisions, pavement crossings shall be constructed for the convenience of public traffic. The material and work necessary for the construction of the crossings, and their subsequent removal and disposal, will be paid for at the contract unit prices for the items of work involved and if there are no contract items for the work involved, payment for pavement crossings will be made by extra work as provided in Section 4-1.03D, "Extra Work.". Where public traffic will be required to cross over the new pavement, Type III portland cement may be used in concrete, if permitted in writing by the Engineer. The pavement may be opened to traffic as soon as the concrete has developed a modulus of rupture of 3.8 MPa. The modulus of rupture will be determined by California Test 523.

• No traffic or Contractor's equipment, except as hereinafter provided, will be permitted on the pavement before a period of 10 days has elapsed after the concrete has been placed, nor before the concrete has developed a modulus of rupture of at least 3.8 MPa. Concrete that fails to attain a modulus of rupture of 3.8 MPa within 10 days shall not be opened to traffic until directed by the Engineer.

• Equipment for sawing weakened plane joints will be permitted on the pavement as specified in Section 40-1.08B, "Weakened Plane Joints."

• When requested in writing by the Contractor, the tracks on one side of paving equipment will be permitted on the pavement after a modulus of rupture of 2.4 MPa has been attained, provided that:

A. Unit pressure exerted on the pavement by the paver shall not exceed 135 kPa;
B. Tracks with cleats, grousers, or similar protuberances shall be modified or shall travel on planks or equivalent protective material, so that the pavement is not damaged; and
C. No part of the track shall be closer than 0.3-m from the edge of pavement.

• In case of visible cracking of, or other damage to the pavement, operation of the paving equipment on the pavement shall be immediately discontinued.

• Damage to the pavement resulting from early use of pavement by the Contractor's equipment as provided above shall be repaired by the Contractor.

• The State will furnish the molds and machines for testing the concrete for modulus of rupture, and the Contractor, at the Contractor's expense, shall furnish the material and whatever labor the Engineer may require.

90-9 COMPRESSIVE STRENGTH

90-9.01 GENERAL

• Concrete compressive strength requirements consist of a minimum strength that shall be attained before various loads or stresses are applied to the concrete and, for concrete designated by strength, a minimum strength at the age of 28 days or at the age otherwise allowed in

CONTRACT NO. 04-012024

CONTRACT CHANGE ORDER NO 108

SHEET 145 OF 207

Section 90-1.01, "Description." The various strengths required are specified in these specifications or the special provisions or are shown on the plans.

- The compressive strength of concrete will be determined from test cylinders that have been fabricated from concrete sampled in conformance with the requirements of California Test 539. Test cylinders will be molded and initially field cured in conformance with California Test 540. Test cylinders will be cured and tested after receipt at the testing laboratory in conformance with the requirements of California Test 521. A strength test shall consist of the average strength of 2 cylinders fabricated from material taken from a single load of concrete, except that, if any cylinder should show evidence of improper sampling, molding, or testing, that cylinder shall be discarded and the strength test shall consist of the strength of the remaining cylinder.
- When concrete compressive strength is specified as a prerequisite to applying loads or stresses to a concrete structure or member, test cylinders for other than steam cured concrete will be cured in conformance with Method 1 of California Test 540. The compressive strength of concrete determined for these purposes will be evaluated on the basis of individual tests.
- When concrete is designated by 28-day compressive strength rather than by cementitious material content, the concrete strength to be used as a basis for acceptance of other than steam cured concrete will be determined from cylinders cured in conformance with Method 1 of California Test 540. If the result of a single compressive strength test at the maximum age specified or allowed is below the specified strength but is 95 percent or more of the specified strength, the Contractor shall make corrective changes, subject to approval of the Engineer, in the mix proportions or in the concrete fabrication procedures, before placing additional concrete, and shall pay to the State $14 for each in-place cubic meter of concrete represented by the deficient test. If the result of a single compressive strength test at the maximum age specified or allowed is below 95 percent of the specified strength, but is 85 percent or more of the specified strength, the Contractor shall make the corrective changes specified above, and shall pay to the State $20 for each in place cubic meter of concrete represented by the deficient test. In addition, such corrective changes shall be made when the compressive strength of concrete tested at 7 days indicates, in the judgment of the Engineer, that the concrete will not attain the required compressive strength at the maximum age specified or allowed. Concrete represented by a single test that indicates a compressive strength of less than 85 percent of the specified 28-day compressive strength will be rejected in conformance with the provisions in Section 6-1.04, "Defective Materials."
- If the test result indicates that the compressive strength at the maximum curing age specified or allowed is below the specified strength, but is 85 percent or more of the specified strength, payments to the State as required above shall be made, unless the Contractor, at the Contractor's expense, obtains and submits evidence acceptable to the Engineer that the strength of the concrete placed in the work meets or exceeds the specified 28-day compressive strength. If the test result indicates a compressive strength at the maximum curing age specified or allowed below 85 percent, the concrete represented by that test will be rejected, unless the Contractor, at the Contractor's expense, obtains and submits evidence acceptable to the Engineer that the strength and quality of the concrete placed in the work are acceptable. If the evidence consists of tests made on cores taken from the work, the cores shall be obtained and tested in conformance with the requirements in ASTM Designation: C 42.
- No single compressive strength test shall represent more than 250 m^3.
- If a precast concrete member is steam cured, the compressive strength of the concrete will be determined from test cylinders that have been handled and stored in conformance with Method 3 of California Test 540. The compressive strength of steam cured concrete will be

CONTRACT NO. 04-012024

CONTRACT CHANGE ORDER NO 108

SHEET 146 OF 267

evaluated on the basis of individual tests representing specific portions of production. If the concrete is designated by 28-day compressive strength rather than by cementitious material content, the concrete shall be considered to be acceptable whenever its compressive strength reaches the specified 28-day compressive strength provided that strength is reached in not more than the maximum number of days specified or allowed after the member is cast.

- When concrete is specified by compressive strength, prequalification of materials, mix proportions, mixing equipment, and procedures proposed for use will be required prior to placement of the concrete. Prequalification shall be accomplished by the submission of acceptable certified test data or trial batch reports by the Contractor. Prequalification data shall be based on the use of materials, mix proportions, mixing equipment, procedures, and size of batch proposed for use in the work.
- Certified test data, in order to be acceptable, shall indicate that not less than 90 percent of at least 20 consecutive tests exceed the specified strength at the maximum number of cure days specified or allowed, and none of those tests are less than 95 percent of specified strength. Strength tests included in the data shall be the most recent tests made on concrete of the proposed mix design and all shall have been made within one year of the proposed use of the concrete.
- Trial batch test reports, in order to be acceptable, shall indicate that the average compressive strength of 5 consecutive concrete cylinders, taken from a single batch, at not more than 28 days (or the maximum age allowed) after molding shall be at least 4 MPa greater than the specified 28-day compressive strength, and no individual cylinder shall have a strength less than the specified strength at the maximum age specified or allowed. Data contained in the report shall be from trial batches that were produced within one year of the proposed use of specified strength concrete in the project. Whenever air-entrainment is required, the air content of trial batches shall be equal to or greater than the air content specified for the concrete without reduction due to tolerances.
- Tests shall be performed in conformance with either the appropriate California Test methods or the comparable ASTM test methods. Equipment employed in testing shall be in good condition and shall be properly calibrated. If the tests are performed during the life of the contract, the Engineer shall be notified sufficiently in advance of performing the tests in order to witness the test procedures.
- The certified test data and trial batch test reports shall include the following information:

A. Date of mixing.
B. Mixing equipment and procedures used.
C. The size of batch in cubic meters and the mass, type, and source of all ingredients used.
D. Penetration or slump (if the concrete will be placed under water or placed in cast-in-place concrete piles) of the concrete.
E. The air content of the concrete if an air-entraining admixture is used.
F. The age at time of testing and strength of all concrete cylinders tested.

- Certified test data and trial batch test reports shall be signed by an official of the firm that performed the tests.
- When approved by the Engineer, concrete from trial batches may be used in the work at locations where concrete of a lower quality is required and the concrete will be paid for as the type or class of concrete required at that location.
- After materials, mix proportions, mixing equipment, and procedures for concrete have been prequalified for use, additional prequalification by testing of trial batches will be required

CONTRACT NO. 04-012024

CONTRACT CHANGE ORDER NO 108

SHEET 147 OF 267

prior to making changes that, in the judgment of the Engineer, could result in a strength of concrete below that specified.

• The Contractor's attention is directed to the time required to test trial batches and the Contractor shall be responsible for production of trial batches at a sufficiently early date so that the progress of the work is not delayed.

• When precast concrete members are manufactured at the plant of an established manufacturer of precast concrete members, the mix proportions of the concrete shall be determined by the Contractor, and a trial batch and prequalification of the materials, mix proportions, mixing equipment, and procedures will not be required.

90-10 MINOR CONCRETE

90-10.01 GENERAL

• Concrete for minor structures, slope paving, curbs, sidewalks and other concrete work, when designated as minor concrete on the plans, in the specifications, or in the contract item, shall conform to the provisions specified herein.

• The Engineer, at the Engineer's discretion, will inspect and test the facilities, materials and methods for producing the concrete to ensure that minor concrete of the quality suitable for use in the work is obtained.

90-10.02 MATERIALS

• Minor concrete shall conform to the following requirements:

90-10.02A CEMENTITIOUS MATERIAL

• Cementitious material shall conform to the provisions in Section 90-1.01, "Description."

90-10.02B AGGREGATE

• Aggregate shall be clean and free from deleterious coatings, clay balls, roots, and other extraneous materials.

• Use of crushed concrete or reclaimed aggregate is acceptable only if the aggregate satisfies all aggregate requirements.

• The Contractor shall submit to the Engineer for approval, a grading of the combined aggregate proposed for use in the minor concrete. After acceptance of the grading, aggregate furnished for minor concrete shall conform to that grading, unless a change is authorized in writing by the Engineer.

• The Engineer may require the Contractor to furnish periodic test reports of the aggregate grading furnished. The maximum size of aggregate used shall be at the option of the Contractor, but in no case shall the maximum size be larger than 37.5 mm or smaller than 19 mm.

• The Engineer may waive, in writing, the gradation requirements in this Section 90-10.02B, if, in the Engineer's opinion, the furnishing of the gradation is not necessary for the type or amount of concrete work to be constructed.

90-10.02C WATER

• Water used for washing, mixing, and curing shall be free from oil, salts, and other impurities that would discolor or etch the surface or have an adverse affect on the quality of the concrete.

CONTRACT NO. 04-012024

CONTRACT CHANGE ORDER NO 1086

SHEET 145 OF 267

90-10.02D ADMIXTURES

- The use of admixtures shall conform to the provisions in Section 90-4, "Admixtures."

90-10.03 PRODUCTION

- Cementitious material, water, aggregate, and admixtures shall be stored, proportioned, mixed, transported, and discharged in conformance with recognized standards of good practice that will result in concrete that is thoroughly and uniformly mixed, that is suitable for the use intended, and that conforms to requirements specified herein. Recognized standards of good practice are outlined in various industry publications such as are issued by American Concrete Institute, AASHTO, or the Department.
- The cementitious material content of minor concrete shall conform to the provisions in Section 90-1.01, "Description."
- The amount of water used shall result in a consistency of concrete conforming to the provisions in Section 90-6.06, "Amount of Water and Penetration." Additional mixing water shall not be incorporated into the concrete during hauling or after arrival at the delivery point, unless authorized by the Engineer.
- Discharge of ready-mixed concrete from the transporting vehicle shall be made while the concrete is still plastic and before stiffening occurs. An elapsed time of 1.5 hours (one hour in nonagitating hauling equipment), or more than 250 revolutions of the drum or blades, after the introduction of the cementitious material to the aggregates, or a temperature of concrete of more than 32°C will be considered conditions contributing to the quick stiffening of concrete. The Contractor shall take whatever action is necessary to eliminate quick stiffening, except that the addition of water will not be permitted.
- The required mixing time in stationary mixers shall be not less than 50 seconds or more than 5 minutes.
- The minimum required revolutions at mixing speed for transit-mixed concrete shall be not less than that recommended by the mixer manufacturer, and shall be increased, if necessary, to produce thoroughly and uniformly mixed concrete.
- When a high range water-reducing admixture is added to the concrete at the job site, the total number of revolutions shall not exceed 300.
- Each load of ready-mixed concrete shall be accompanied by a weighmaster certificate that shall be delivered to the Engineer at the discharge location of the concrete, unless otherwise directed by the Engineer. The weighmaster certificate shall be clearly marked with the date and time of day when the load left the batching plant and, if hauled in truck mixers or agitators, the time the mixing cycle started.
- A Certificate of Compliance conforming to the provisions in Section 6–1.07, "Certificates of Compliance," shall be furnished to the Engineer, prior to placing minor concrete from a source not previously used on the contract, stating that minor concrete to be furnished meets contract requirements, including minimum cementitious material content specified.

90-10.04 CURING MINOR CONCRETE

- Curing minor concrete shall conform to the provisions in Section 90-7, "Curing Concrete."

CONTRACT NO. 04-012024

CONTRACT CHANGE ORDER NO 108

SHEET 149 OF 267

90-10.05 PROTECTING MINOR CONCRETE

• Protecting minor concrete shall conform to the provisions in Section 90-8, "Protecting Concrete," except the concrete shall be maintained at a temperature of not less than 4°C for 72 hours after placing.

90-10.06 MEASUREMENT AND PAYMENT

• Minor concrete will be measured and paid for in conformance with the provisions specified in the various sections of these specifications covering concrete construction when minor concrete is specified in the specifications, shown on the plans, or indicated by contract item in the Engineer's Estimate.

90-11 MEASUREMENT AND PAYMENT

90-11.01 MEASUREMENT

• Portland cement concrete will be measured in conformance with the provisions specified in the various sections of these specifications covering construction requiring concrete.

• For concrete measured at the mixer, the volume in cubic meters shall be computed as the total mass of the batch in kilograms divided by the density of the concrete in kilograms per cubic meter. The total mass of the batch shall be calculated as the sum of all materials, including water, entering the batch. The density of the concrete will be determined in conformance with the requirements in California Test 518.

90-11.02 PAYMENT

• Portland cement concrete will be paid for in conformance with the provisions specified in the various sections of these specifications covering construction requiring concrete.

• Full compensation for furnishing and incorporating admixtures required by these specifications or the special provisions will be considered as included in the contract prices paid for the concrete involved and no additional compensation will be allowed therefor.

• Should the Engineer order the Contractor to incorporate any admixtures in the concrete when their use is not required by these specifications or the special provisions, furnishing the admixtures and adding them to the concrete will be paid for as extra work as provided in Section 4-1.03D, "Extra Work."

• Should the Contractor use admixtures in conformance with the provisions in Section 90-4.05, "Optional Use of Chemical Admixtures," or Section 90-4.07, "Optional Use of Air-entraining Admixtures," or should the Contractor request and obtain permission to use other admixtures for the Contractor's benefit, the Contractor shall furnish those admixtures and incorporate them into the concrete at the Contractor's expense and no additional compensation will be allowed therefor.

SECTION 91: PAINT

Issue Date: November 18, 2005

Section 91-3, "Paints for Timber," of the Standard Specifications is amended to read:

CONTRACT NO. 04-0120R4

CONTRACT CHANGE ORDER NO 108

SHEET 150 OF 267

91-3 PAINTS FOR TIMBER

91-3.01 WOOD PRIMER, LATEX-BASE

Classification:

• This specification covers a ready-mixed priming paint for use on unpainted wood or exterior woodwork. It shall conform with the requirements in the Detailed Performance Standards of the Master Painters Institute (MPI) for exterior wood primers, and be listed on the Exterior Latex Wood Primer MPI List Number 6.

91-3.02 PAINT; LATEX-BASE FOR EXTERIOR WOOD, WHITE AND TINTS

Classification:

• This specification covers a ready-mixed paint for use on wood surfaces subject to outside exposures. This paint shall conform to the requirements in the Detailed Performance Standards of the Master Painters Institute (MPI) for Paint, Latex, Exterior, and shall be listed on the following MPI Approved Products List:

A. Exterior Latex, Flat MPI Gloss Level 1, MPI List Number 10.
B. Exterior Latex, Semi-Gloss, MPI Gloss Level 5, MPI List Number 11.
C. Exterior Latex, Gloss, MPI Gloss Level 6, MPI List Number 119.

• Unpainted wood shall first be primed with wood primer conforming to the provisions in Section 91-3.01, "Wood Primer, Latex-Base."

Section 91-4, "Miscellaneous Paints," of the Standard Specifications is amended to read:

91-4 MISCELLANEOUS PAINTS

91-4.01 THROUGH 91-4.04 (BLANK)

91-4.05 PAINT; ACRYLIC EMULSION, EXTERIOR WHITE AND LIGHT AND MEDIUM TINTS

Classification:

• This specification covers an acrylic emulsion paint designed for use on exterior masonry. This paint shall conform to the requirements in the Detailed Performance Standards of the Master Painters Institute (MPI) for Paint, Latex, Exterior, and shall be listed on the following MPI Approved Products Lists:

A. Exterior Latex, Flat MPI Gloss Level 1, MPI List Number 10.
B. Exterior Latex, Semi-Gloss, MPI Gloss Level 5, MPI List Number 11.
C. Exterior Latex, Gloss, MPI Gloss Level 6, MPI List Number 119.

• This paint may be tinted by using "universal" or "all purpose" concentrates.

SECTION 92: ASPHALTS

Issue Date: February 2, 2007

Section 92, "Asphalts," of the Standard Specifications is amended to read:

CONTRACT NO. 04-012024

CONTRACT CHANGE ORDER NO 108

SHEET 151 OF 267

92-1.01 DESCRIPTION

• Asphalt is refined petroleum or a mixture of refined liquid asphalt and refined solid asphalt that are prepared from crude petroleum. Asphalt is:

1. Free from residues caused by the artificial distillation of coal, coal tar, or paraffin
2. Free from water
3. Homogeneous

92-1.02 MATERIALS

GENERAL

• Furnish asphalt under the Department's "Certification Program for Suppliers of Asphalt." The Department maintains the program requirements, procedures, and a list of approved suppliers at:

http://www.dot.ca.gov/hq/esc/Translab/fpmcoc.htm

• Transport, store, use, and dispose of asphalt safely.

• Prevent the formation of carbonized particles caused by overheating asphalt during manufacturing or construction.

GRADES

• Performance graded (PG) asphalt binder is:

CONTRACT NO. 04-0K20R4

CONTRACT CHANGE ORDER NO 105

SHEET 152 OF 267

Performance Graded Asphalt Binder

Property	AASHTO Test Method	Specification Grade PG 58-22 [a]	PG 64-10	PG 64-16	PG 64-28	PG 70-10
Original Binder						
Flash Point, Minimum °C	T 48	230	230	230	230	230
Solubility, Minimum % [b]	T 44	99	99	99	99	99
Viscosity at 135°C, [c] Maximum, Pa·s	T 316	3.0	3.0	3.0	3.0	3.0
Dynamic Shear, Test Temp. at 10 rad/s, °C Minimum G*/sin(delta), kPa	T 315	58 1.00	64 1.00	64 1.00	64 1.00	70 1.00
RTFO Test, [e] Mass Loss, Maximum, %	T 240	1.00	1.00	1.00	1.00	1.00
RTFO Test Aged Binder						
Dynamic Shear, Test Temp. at 10 rad/s, °C Minimum G*/sin(delta), kPa	T 315	58 2.20	64 2.20	64 2.20	64 2.20	70 2.20
Ductility at 25°C Minimum, cm	T 51	75	75	75	75	75
PAV [f] Aging, Temperature, °C	R 28	100	100	100	100	110
RTFO Test and PAV Aged Binder						
Dynamic Shear, Test Temp. at 10 rad/s, °C Maximum G*sin(delta), kPa	T 315	22 [d] 5000	31 [d] 5000	28 [d] 5000	22 [d] 5000	34 [d] 5000
Creep Stiffness, Test Temperature, °C Maximum S-value, Mpa Minimum M-value	T 313	-12 300 0.300	0 300 0.300	-6 300 0.300	-18 300 0.300	0 300 0.300

Notes:

a. Use as asphalt rubber base stock for high mountain and high desert area.

b. The Engineer waives this specification if the supplier is a Quality Supplier as defined by the Department's "Certification Program for Suppliers of Asphalt."

c. The Engineer waives this specification if the supplier certifies the asphalt binder can be adequately pumped and mixed at temperatures meeting applicable safety standards.

d. Test the sample at 3°C higher if it fails at the specified test temperature. G*sin(delta) remains 5000 kPa maximum.

e. "RTFO Test" means the asphaltic residue obtained using the Rolling Thin Film Oven Test, AASHTO Test Method T 240 or ASTM Designation: D 2872. The residue from mass change determination may be used for other tests.

f. "PAV" means Pressurized Aging Vessel.

- Performance graded polymer modified asphalt binder (PG Polymer Modified) is:

CONTRACT NO. 04-012ORY

CONTRACT CHANGE ORDER NO 108

SHEET 153 OF 267

Performance Graded Polymer Modified Asphalt Binder [a]

Property	AASHTO Test Method	Specification Grade		
		PG 58-34 PM	PG 64-28 PM	PG 76-22 PM
Original Binder				
Flash Point, Minimum °C	T 48	230	230	230
Solubility, Minimum % [b]	T 44[c]	98.5	98.5	98.5
Viscosity at 135°C, [d] Maximum, Pa·s	T 316	3.0	3.0	3.0
Dynamic Shear, Test Temp. at 10 rad/s, °C Minimum G*/sin(delta), kPa	T 315	58 1.00	64 1.00	76 1.00
RTFO Test , Mass Loss, Maximum, %	T 240	1.00	1.00	1.00
RTFO Test Aged Binder				
Dynamic Shear, Test Temp. at 10 rad/s, °C Minimum G*/sin(delta), kPa	T 315	58 2.20	64 2.20	76 2.20
Dynamic Shear, Test Temp. at 10 rad/s, °C Maximum (delta), %	T 315	Note e 80	Note e 80	Note e 80
Elastic Recovery[f], Test Temp., °C Minimum recovery, %	T 301	25 75	25 75	25 65
PAV[g] Aging, Temperature, °C	R 28	100	100	110
RTFO Test and PAV Aged Binder				
Dynamic Shear, Test Temp. at 10 rad/s, °C Maximum G*sin(delta), kPa	T 315	16 5000	22 5000	31 5000
Creep Stiffness, Test Temperature, °C Maximum S-value, MPa Minimum M-value	T 313	-24 300 0.300	-18 300 0.300	-12 300 0.300

Notes:

a. Do not modify PG Polymer Modified using acid modification.

b. The Engineer waives this specification if the supplier is a Quality Supplier as defined by the Department's "Certification Program for Suppliers of Asphalt."

c. The Department allows ASTM D 5546 instead of AASHTO T 44

d. The Engineer waives this specification if the supplier certifies the asphalt binder can be adequately pumped and mixed at temperatures meeting applicable safety standards.

e. Test temperature is the temperature at which G*/sin(delta) is 2.2 kPa. A graph of log G*/sin(delta) plotted against temperature may be used to determine the test temperature when G*/sin(delta) is 2.2 kPa. A graph of (delta) versus temperature may be used to determine delta at the temperature when G*/sin(delta) is 2.2 kPa. The Engineer also accepts direct measurement of (delta) at the temperature when G*/sin(delta) is 2.2 kPa.

f. Tests without a force ductility clamp may be performed.

g. "PAV" means Pressurized Aging Vessel.

SAMPLING

- Provide a sampling device in the asphalt feed line connecting the plant storage tanks to the asphalt weighing system or spray bar. Make the sampling device accessible between 600 and 750 mm above the platform. Provide a receptacle for flushing the sampling device.
- Include with the sampling device a valve:

CONTRACT NO. 04-0120R4

CONTRACT CHANGE ORDER NO 108

SHEET 134 OF 267

1. Between 10 and 20 mm in diameter
2. Manufactured in a manner that a one-liter sample may be taken slowly at any time during plant operations
3. Maintained in good condition

- Replace failed valves.
- In the Engineer's presence, take 2 one-liter samples per operating day. Provide round, friction top, one-liter containers for storing samples.

92-1.03 EXECUTION

- If asphalt is applied, you must comply with the heating and application specifications for liquid asphalt in Section 93, "Liquid Asphalts."

92-1.04 MEASUREMENT

- If the contract work item for asphalt is paid by mass, the Department measures asphalt tonnes by complying with the specifications for mass determination of liquid asphalt in Section 93, "Liquid Asphalts."
- The Engineer determines the asphalt mass from volumetric measurements if you:

1. Use a partial asphalt load.
2. Use asphalt at a location other than a mixing plant and no scales within 35 km are available and suitable.
3. Deliver asphalt in either of the following:

    3.1. A calibrated truck with each tank accompanied by its measuring stick and calibration card.
    3.2. A truck equipped with a calibrated thermometer that determines the asphalt temperature at the delivery time and with a vehicle tank meter complying with the specifications for weighing, measuring, and metering devices in Section 9-1.01, "Measurement of Quantities."

- If you furnish asphalt concrete from a mixing plant producing material for only one project, the Engineer determines the asphalt quantity by measuring the volume in the tank at the project's start and end provided the tank is calibrated and equipped with its measuring stick and calibration card.

- The Engineer determines pay quantities from volumetric measurements as follows:

1. Before converting the volume to mass, the Engineer reduces the measured volume to that which the asphalt would occupy at 15°C.
2. The Engineer uses 981 L/tonne and 1020 g/L for the average mass and volume for PG and PG Polymer Modified asphalt grades at 15°C.
3. The Engineer uses the Conversion Table in Section 93, "Liquid Asphalts."

SECTION 93: LIQUID ASPHALTS

CONTRACT NO. 04-012024

CONTRACT CHANGE ORDER NO 108

SHEET 155 OF 207

Issue Date: November 3, 2006

The ninth paragraph of Section 93-1.04, "Measurement," of the Standard Specifications is amended to read:

• The following Legend and Conversion Table is to be used for converting volumes of liquid asphalt products, Grades 70 to 3000, inclusive, and paving asphalt Grades PG 58-22, PG 64-10, PG 64-16, PG 64-28, and PG 70-10, and Grades PG 58-34 PM, PG 64-28 PM, and PG 76-22 PM.

SECTION 95: EPOXY

Issue Date: March 16, 2007

Section 95, "Epoxy," of the Standard Specifications is amended to read:

95-1 GENERAL

95-1.01 DESCRIPTION

• These specifications are intended to specify epoxy that will meet service requirements for highway construction.

• Epoxy shall be furnished as 2 components, which shall be mixed together at the site of the work.

95-1.02 SAMPLING AND TESTING

• Epoxy shall not be used prior to sampling and testing unless its use is permitted prior to sampling and testing in conformance with the provisions in Section 6-1.07, "Certificates of Compliance."

• Tests will be conducted in conformance with the latest test methods of the American Society for Testing and Materials, and California Test Methods in use by the Transportation Laboratory.

• Epoxy components shall be formulated to maintain the specified properties for a minimum of one year. The Engineer may require additional testing of any epoxy component that has not been used within one year of manufacture.

95-1.03 PACKAGING, LABELING AND STORING

• Each component shall be packaged in containers of size proportional to the amount of that component in the mix so that one container of each component is used in mixing one batch of epoxy. The containers shall be of such design that all of the contents may be readily removed and shall be well sealed to prevent leakage. The containers and labeling shall meet U.S. Department of Transportation Hazardous Material Shipping Regulations, and the containers shall be of a material, or lined with a material, of such character as to resist any action by the components. Each container shall be clearly labeled with the ASTM Designation: C881 Class and Type; designation (Component A or B); manufacturer's name; date of manufacture; batch number (a batch shall consist of a single charge of all components in a mixing chamber); all directions for use (as specified elsewhere) and such warning or precautions concerning the contents as may be required by State or Federal Laws and Regulations. The manufacturer of the finished epoxy components shall furnish a Certificate of Compliance in conformance with the

CONTRACT NO. 04-012024

CONTRACT CHANGE ORDER NO 108

SHEET 156 OF 267

provisions in Section 6-1.07, "Certificates of Compliance," and a copy of the label for each material. The certificate shall include a list, by Title and Section, of the State and Federal packaging and labeling laws and regulations that the manufacturer has complied with.

• Attention is directed to the characteristic of some epoxy components to crystallize or thicken excessively prior to use when stored at temperatures below 2°C. Any material which shows evidence of crystallization or a permanent increase in viscosity or settling of pigments which cannot be readily redispersed with a paddle shall not be used.

95-1.04 DIRECTIONS FOR USE

• At the time of mixing, components A and B shall be at a temperature between 15°C and 30°C, unless otherwise specified. Any heating of the adhesive components shall be done by application of indirect heat. Immediately prior to mixing, each component shall be thoroughly mixed with a paddle. Separate paddles shall be used to stir each component. Immediately prior to use, the 2 components shall be thoroughly mixed together in the specified ratios. No solvent shall be added to any epoxy.

• After mixing, epoxies shall be placed in the work and any overlaying or inserted material which is to be bonded to the work by the epoxy shall also be placed before thickening of the epoxy has begun. Surfaces upon which epoxy is to be placed shall be free of rust, paint, grease, asphalt, and loose and deleterious material. When epoxy is used as a binder to make epoxy concrete or mortar, the 2 components of epoxy shall be thoroughly mixed together before the aggregate is added and, unless otherwise specified, the mix proportions shall consist of one part of binder to approximately 4 parts of aggregate, by volume. Aggregate for use in epoxy concrete and mortar shall be clean and shall have a moisture content of not more than 0.50-percent when tested by California Test 226. Surfaces against which epoxy concrete and mortar are to be placed shall be primed with a coat of the epoxy used just prior to placing the concrete or mortar.

95-2 TYPES OF EPOXIES

95-2.01 BINDER (ADHESIVE), EPOXY RESIN BASE

Classification:

• This specification covers a low viscosity epoxy formulated primarily for use in making high-strength epoxy concrete and epoxy mortar and in pressure grouting of cracks in concrete. For load bearing applications, use ASTM Designation: C 881, Type IV, Grade 1, Class B or C. Class B or C shall be used depending on the substrate and ambient temperatures. Use Grade B for atmospheric and surface temperatures as low as 4°C. Use Class C when temperatures are 15°C or higher. For non-load bearing applications use ASTM Designation: C881, Type I, Grade 1, Class B or C. Apply no thicker than recommended by the manufacturer. Thick sections of this epoxy are not suitable for use in freeze thaw environments. In a freeze-thaw environment, increase the aggregate loading to improve the properties of the epoxy concrete.

Directions for Use:

• Mix in conformance with the manufacturer's written recommendations. No more material shall be mixed than can be used within the pot-life from the time mixing operations are started.

95-2.02 (BLANK)

CONTRACT NO. 04-012 ORH

CONTRACT CHANGE ORDER NO 168

SHEET 157 OF 267

95-2.03 EPOXY RESIN ADHESIVE FOR BONDING NEW CONCRETE TO OLD CONCRETE

Classification:

• This specification covers a low viscosity paste epoxy formulated primarily for use in bonding new portland cement concrete to hardened portland cement concrete. The epoxy shall meet the specification requirements of ASTM Designation: C 881, Type V, Grade 2. This epoxy is available in 2 Classes: Class C for general use at temperature greater than 15°C and Class B for use when cure temperatures are below 15°C and above 4°C, or when a faster cure is required.

Directions for Use:

• The mixing ratio and use shall be in conformance with the manufacturer's written recommendations. When measuring as individual Components A and B, stir and tap the measuring containers to remove possible air voids. The ingredients in Components A and B shall be thoroughly dispersed such that each component forms a uniform paste. Do not mix more material than can be spread within the pot life from the time mixing operations are started. The spreading rate shall be sufficient to thoroughly coat the surface. Spread the mixed adhesive by brush or roller over blast-cleaned concrete at a rate recommended by the manufacturer. The new concrete shall be placed against the adhesive coating on the old concrete before the adhesive has set. If the adhesive has set and is not tacky prior to placing the new concrete, a new coating of adhesive shall be applied.

95-2.04 RAPID SET EPOXY ADHESIVE FOR PAVEMENT MARKERS

Classification:

• This specification covers a high viscosity paste, rapid set epoxy formulated primarily for use in bonding pavement markers to portland cement concrete and asphalt concrete. The adhesive shall meet ASTM Designation: C 881, Type IV, Grade 3, Class B and C except that the gel time may be shorter than 30 minutes. The adhesive shall conform to these requirements and the following.

Characteristics of Combined Components:

• All tests shall be performed in conformance with the requirements in California Test 434.

CONTRACT NO. 04-012024

CONTRACT CHANGE ORDER NO 1085

SHEET 158 OF 267

Property	Requirement
Gel time, minutes, maximum, at 25°C	30
Bond Strength to Concrete, Time, minutes (maximum) to reach not less than 1.4 MPa	
at 25°C ±1°C	35
at 10°C ±1°C	45
Slant Shear Strength	
2 days at 25°C ±1°C, MPa	7
14 days at 25°C ±1°C, plus water soak, MPa	10.5
Tensile Adhesion and Cohesion	
Ceramic marker bottom, MPa	4.8 min.
Ceramic marker bottom, including post cure, MPa	4.8 min.
Retroreflective pavement marker bottom, MPa	3.4 min.
Color of mixed epoxy	gray
Glass transition temperature, Tg, samples conditioned at 25°C for 24 hours, ASTM Designation: D 4065	30°C min.

Directions for Use:

- Components A and B shall be mixed in conformance with the manufacturer's written recommendations. When an automatic proportioning and mixing machine is used, the temperature of the components shall be maintained by indirect heating or cooling, so that the adhesive will meter, mix and extrude properly. The maximum temperature shall be such that after proper mixing no excess adhesive shall flow from under the marker other than that specified in Section 85-1.06, "Placement."

95-2.05 STANDARD SET EPOXY ADHESIVE FOR PAVEMENT MARKERS

Classification:

- This specification covers a high viscosity paste standard set epoxy formulated primarily for use in bonding pavement markers to portland cement concrete and asphalt concrete. The epoxy shall meet ASTM Designation: C 881, Type IV, Viscosity Grade 3, Classes B or C, except that the gel time may be shorter than 30 minutes.

Characteristics of Combined Components:

- All tests shall be performed in conformance with the requirements in California Test 434.

CONTRACT NO. 04-012024

CONTRACT CHANGE ORDER NO 108

SHEET 159 OF 267

Property	Requirement
Gel time, minutes, maximum, at 25°C	30
Bond Strength to Concrete, Time (maximum) to reach not less than 1.4 MPa	
at 25°C ±1°C	3.5 hours
at 13°C ±1°C	24 hours
Slant Shear Strength	
2 days at 25°C ±1°C, MPa	7 min.
14 days at 25°C ±1°C, plus water soak, MPa	10.5 min.
Tensile Adhesion and Cohesion	
Ceramic marker bottom, MPa	4.8 min.
Ceramic marker bottom, including post cure, MPa	4.8 min.
Reflective pavement marker bottom, MPa	3.4 min.
Color of Mixed Components	gray
Glass transition temperature, Tg, samples conditioned at 25°C for 24 hours, ASTM Designation: D 4065	30°C min.

Directions for Use:

• Components A and B shall be mixed in conformance with the manufacturer's written recommendations. When an automatic proportioning and mixing machine is used, the temperature of the components shall be maintained by indirect heating or cooling, so that the adhesive will meter, mix and extrude properly. The maximum temperature shall be such that after proper mixing no excess adhesive shall flow from under the marker other than that specified in Section 85-1.06, "Placement."

95-2.06 (BLANK)

95-2.07 (BLANK)

95-2.08 (BLANK)

95-2.09 EPOXY SEALANT FOR INDUCTIVE LOOPS

Classification:

• This specification covers a high viscosity liquid epoxy formulated primarily for use in sealing inductive wire loops and leads imbedded in asphalt concrete and portland cement concrete for traffic signal controls and vehicle counters. This epoxy is to be used for repair work on existing spalls, cracks and other deformations in and around saw cuts housing inductor loops and leads. The rapid cure allows minimum traffic delay. This sealant is suitable for use in freeze-thaw areas. The epoxy shall meet ASTM Designation: C 881, Type I, Grade 2 and the following requirements.

Characteristics of Combined Components:

• All tests shall be performed in conformance with the requirements in California Test 434.

CONTRACT NO. 04-012024

CONTRACT CHANGE ORDER NO 108

SHEET 160 OF 267

Property	Requirement
Gel time, minutes, maximum	30
On 3-mm cast sheet, cured 18 hours at 25°C, + 5 hours at 70°C	
Tensile Strength, MPa	2.7 min.
Elongation, percent	90 min.
Shore D Hardness	45 min.

Directions for Use:

- Saw cuts shall be cleaned with compressed air to remove all excess moisture and debris. For repairing damaged saw cuts, all loose spalled material shall be cleaned away from the saw cut, chipping back to sound asphalt concrete or portland cement concrete and all loose material cleaned from loop wires.
- The mixing ratio shall be in conformance with the manufacturer's recommendations. No more material shall be mixed than can be used within the gel time from the time mixing operations are started.
- When automatic mixing equipment is used for mixing the sealant, the provisions in the twelfth paragraph in Section 85-1.06, "Placement," shall apply.

95-2.10 (BLANK)

95-2.11 EPOXY RESIN ADHESIVE FOR INJECTION GROUTING OF PORTLAND CEMENT CONCRETE PAVEMENTS

Directions for Use:

- Both components and the mixed material shall contain no solvents. The mixing ratio of the components in terms of volume and mass shall be clearly stated. The material shall be suitable for use in the mixing equipment used by the applicator. Epoxy adhesive samples shall be furnished to the Engineer for testing at least 12 days before the expected time of use.

CONTRACT NO. 04-012024

CONTRACT CHANGE ORDER NO 1058

SHEET 161 OF 267

Characteristics of Adhesive:

Test[a]	California Test	Requirement
Brookfield Viscosity, No. 3 Spindle at 20 rpm, Pa·s at 25°C	434, Part 4	0.9 max.
Gel time, minutes	434, Part 1	2 to 15
Slant Shear Strength on Dry Concrete, MPa, after 4 days of cure in air at 25°C ±1°C	434, Part 5[b]	41.4 min.
Slant Shear Strength on Wet Concrete, MPa, after 4 days of cure in air at 25°C ±1°C	434, Part 5[b]	21.1 min.
Tensile Strength, Mpa	434, Part 7, except test after 4 days of cure at 25°C ±1°C	31.0 min.
Elongation, %	434, Part 7, except test after 4 days of cure at 25°C ±1°C	10 max.

a The mixing ratio used will be that recommended by the manufacturer.

b For slant shear strength on concrete, delete Sections B-1 and B-5 of California Test 434, Part 5. For dry concrete, use Step "2" below only. For wet concrete, use both Steps "1" & "2":

1 Soak blocks in water for 24 hours at 25°C ±1°C. Remove and wipe off excess water.

2 Mix epoxy as described in California Test 434, Part 1, and apply a coat approximately 250 µm thick to each diagonal surface. Place four 3-mm square pieces of shim stock 305 µm thick on one block to control final film thickness. Before pressing the coated surfaces together, leave the blocks so that the coated surfaces are horizontal until the epoxy reacts slightly to prevent excessive flow.

END OF AMENDMENTS

CONTRACT NO. 04-0120R4

CONTRACT CHANGE ORDER NO 108

SHEET 162 OF 267

5-1.01 WORKING DRAWINGS

Working drawings shall conform to the requirements in Section 5-1.02 " Plans and Working Drawings," of the Standard Specifications and these special provisions. Working drawings shall include supplements and calculations that are in addition to drawings.

Working drawings shall be submitted to the following location:

California Department of Transportation
Office of the Resident Engineer, Contract 04-0120F4
345 Burma Rd.
Oakland, CA 94607

Working drawings shall conform to the following:

A. For initial review, 6 sets of the working drawings, shall be submitted. After the Engineer has determined that a submittal is complete, 12 additional sets shall be submitted.
B. Drawings shall be 559 mm x 864 mm or 279 mm x 432 mm in size. Supplements and calculations shall be 215 mm x 280 mm in size.
C. For drawings, text size shall be nominally 2.8 mm high, minimum. For supplement and calculations, font size shall be 12, minimum.
D. Each working drawing sheet and each page of supplement or calculation, shall include the jobsite name of the structure as shown on the contract plans, District-County-Route-Kilometer Post, bridge number and contract number.
E. Text and details shall be legible and suitable for photocopying and reduction.
F. In addition to the paper copies of the working drawings, electronic files shall be submitted. Electronic files shall be portable document format (PDF) and shall be submitted on compact disk (CD) media. Each plan sheet shall be a separate PDF file on the CD. The electronic copy of the calculations and supplement shall be made into separate PDF files so that no more than 50 pages are included in a single file on the CD. The CD shall contain an index consisting of the file names and a description of the corresponding file contents. The files shall be listed in the sequence of: 1) index, 2) drawings, 3) supplement, and 4) calculations. If more than one CD is used for a given working drawing submittal, the index shall be included on each CD.
G. Microfilms are required for approved shop drawings and shall be only a 24x reduction. The edge of the corrected original tracing image shall be clearly visible and visually parallel with the edges of the page. A clear, legible symbol shall be provided on the upper left side of each page to show the amount of reduction, and a horizontal and vertical scale shall be provided on each reduced print to facilitate enlargement to original scale.
H. At the completion of the contract, one compiled set of all approved working drawings (in electronic form and including all corrections and revisions) shall be furnished to the Engineer. The index shall be the first file on the CD.
I. At the completion of the contract, one set of reduced prints on 75-g/m2 (minimum) bond paper, 279 mm x 432 mm in size, of the corrected original tracings of all approved working drawings, including all corrections and revisions shall be furnished to the Engineer. Reduced prints that are common to more than one structure shall be submitted

CONTRACT NO. 04-0120F4
CONTRACT CHANGE ORDER NO 108
SHEET 163 OF 267

for each structure. An index prepared specifically for the drawings for each structure containing sheet numbers and titles shall be included on the first reduced print in the set for each structure. Reduced prints for each structure shall be arranged in the order of drawing numbers shown in the index

Working drawings shall be stamped and signed by an engineer who is registered as a Civil Engineer in the State of California. When independently checked calculations are required, these calculations shall be stamped and signed by another engineer who is registered as a Civil Engineer in the State of California.

Working drawings shall be submitted sufficiently in advance of the start of the affected work to allow time for review by the Engineer and correction by the Contractor of the drawings without delaying the work. The time shall be proportional to the complexity of the work, but in no case shall the time be less than the review time as specified for the type of working drawings as required elsewhere in these special provisions.

The Engineer will review a working drawing submittal for completeness. Within three working days of the receipt of the submittal by the Engineer, the Engineer will notify the Contractor in writing if the submittal is determined to be incomplete. If the submittal is determined to be complete, twenty working days from the day of receipt shall be allowed for approval or return for correction of each submittal or resubmittal, unless specified otherwise in the special provisions.

Should the Engineer fail to review the complete working drawing submittal within the time specified, and the Contractor's controlling operation on the critical path is delayed (as determined by the Engineer) by the Engineer's failure to review within the time specified, an extension of time will be granted in conformance with the provisions in Section 8-1.07, "Liquidated Damages," of the Standard Specifications and in "Progress Schedule (Critical Path Method)," of these special provisions. Should the Engineer fail to review the complete working drawing submittal within the time specified, compensation, if any, will be made in accordance with Section 8-1.09, "Right of Way Delays," of the Standard Specifications, and "Time Related Overhead," of these special provisions.

5-1.__ PAYMENTS

Attention is directed to Sections 9-1.06, "Partial Payments," and 9-1.07, "Payment After Acceptance," of the Standard Specifications and these special provisions.

In determining the partial payments to be made to the Contractor, only the following listed materials will be considered for inclusion in the payment as materials furnished but not incorporated in the work:

A. Prestressing Steel (sealed containers only)
B. Bar Reinforcing Steel_
C. Miscellaneous Metal
D. Bridge Deck Drainage
E. Joint Seal

5-1.__ PROJECT INFORMATION

The information in this section has been compiled specifically for this project and is made available for bidders and Contractors. Other information referenced in the Standard Specifications and these special provisions do not appear in this section. The information is

CONTRACT NO. 04-0120Y4

CONTRACT CHANGE ORDER NO 108

SHEET 164 OF 267

subject to the conditions and limitations set forth in Section 2-1.03, "Examination of Plans, Specifications, Contract, and Site of Work," and Section 6-2, "Local Materials," of the Standard Specifications. Bidders and Contractors shall be responsible for knowing the procedures for obtaining information.

As-built plans of the existing San Francisco-Oakland Bay Bridge, existing Temporary Bypass Structure (Bridge No. 34-0006 TEMP), Route 80 Detour Structures, and Advance Construction Plans (Contract Change Order Nos. 64 and 75) are available for inspection, upon written request, at the Duty Senior at the District 4 Office, 111 Grand Avenue, Oakland, CA 94612, email: duty_senior_district04@dot.ca.gov, telephone number (510) 286-5209, and fax number (510) 622-1805. Requests shall be made on company letterhead and shall include the information requested, the purpose for the information (include contract or permit numbers), and contact information.

Plans of the existing bridges available to bidders and Contractors are reproductions of the original contract plans, with significant changes noted, and working drawings, and do not necessarily show normal construction tolerances and variances. Where dimensions of new construction required by this contract are dependent on the dimensions of the existing bridges, the Contractor shall verify the controlling field dimensions and shall be responsible for adjusting dimensions of the work to fit existing conditions.

10-1.__ SHORING TOWERS

Shoring towers shall be designed, constructed, maintained and removed in conformance with the details shown on the plans, the requirements in Section 51-1.06, "Falsework," of the Standard Specifications and these special provisions.

Shoring towers shall include all assemblies and appurtenant items necessary to jack and support the structure.

Attention is directed to the sections "Order of Work" and "Maintaining Traffic" of these special provisions.

Approval by the Engineer of the shoring tower working drawings will in no way relieve the Contractor of full responsibility for the shoring towers.

WORKING DRAWINGS

The Contractor shall submit to the Engineer working drawings and design calculations for the shoring towers. Such drawings and design calculations shall be signed by an engineer who is registered as a Civil Engineer in the State of California. The shoring tower working drawings and design calculations shall conform to the requirements in Section 5-1.02, "Plans and Working Drawings," of the Standard Specifications. The number of sets of drawings and design calculations and times for review for shoring towers shall be the same as specified for falsework working drawings in Section 51-1.06A, "Falsework Design and Drawings," of the Standard Specifications.

The shoring tower working drawings shall include descriptions and values of all loads, a summary of computed stresses, descriptions of equipment to be used, erection methods and removal plans and complete details and calculations for jacking and shimming the existing structure.

When footing type foundations are to be used, the Contractor shall determine the bearing value of the soil and shall show the values assumed in the design of the shoring towers on the shoring tower drawings. Anticipated shoring tower foundation settlement shall be shown on the shoring tower drawings.

SHORING TOWER DESIGN

The shoring towers shall be designed to minimize the live load deflection of the YBI South Edge Beam. Pre-loading of the shoring tower is required to remove initial settlement and seat the spread footing. After initial settlement has been removed, the shoring tower shall be capable of carrying a 450 kN axial load with no more than 3 mm of deflection. The total load capacity of the shoring tower shall be a minimum of 1320 kN.

Manufactured Assemblies

Manufactured assemblies shall conform to the provisions in Section 51-1.06A(2) "Design Stresses, Loadings, and Deflections," of the Standard Specifications and these special provisions.

All jacks shall be equipped with a load cell for determining the jacking force. Pressure gages shall have an accurately reading dial at least 150 mm in diameter. Each jack shall be calibrated by a private laboratory approved by the Transportation Laboratory within 6 months prior to use and after each repair, unless otherwise directed. Each jack and its gage shall be calibrated as a unit with the cylinder extension in the approximate position that it will be at final jacking force and shall be accompanied by a certified calibration chart. Load cells shall be calibrated and provided with an indicator by which the jacking force is determined.

Jacks for shoring towers shall be load-rated for at least 125% of the design service loads.

CONSTRUCTION

The construction of shoring towers at each location shall not begin until the Engineer has reviewed and approved the drawings for that location.

Prior to jacking, an engineer for the Contractor who is registered as a Civil Engineer in the State of California shall inspect the shoring towers including jacking systems, for conformity with the working drawings. The Contractor's registered engineer shall certify in writing that the temporary supports, including jacking, conform to the working drawings, and that the material and workmanship are satisfactory for the purpose intended. A copy of this certification shall be available at the site of the work at all times.

The Contractor's registered engineer shall be present at the bridge site at all times when jacking operations or adjustments are in progress.

Pre-Loading of Shoring Towers

A force of 900 kN shall be jacked onto the shoring tower and held for at least 24 hours or until all initial compression and settlement have occurred. During this period, the jacks shall be monitored and adjusted to ensure the jacking load remains constant. Prior to placing the shim plates, the Contractor shall reduce the jacking force on the shoring tower to 90 kN. The Contractor shall monitor the shims daily until load transfer is completed to ensure snugness for the duration of the reconstruction work. If a gap develops between the shims and the edge beam, the Contractor shall place additional shims snug tight to fill the gap.

Adequate means shall be employed to prevent unplanned lateral and longitudinal movement of the shoring tower during jacking and shimming operations. The jacking and support system and the superstructure shall be stable during all phases of the operation.

Should unanticipated displacements, cracking or other damage occur, the operation shall be discontinued until corrective measures satisfactory to the Engineer are performed. Damage to the structure as a result of the Contractor's operations shall be repaired by the Contractor in conformance with the provisions in Section 7-1.11, "Preservation of Property," of the Standard Specifications.

CONTRACT NO. 04-0120R4

CONTRACT CHANGE ORDER NO 108

SHEET 1100 OF 2677

When no longer required, shoring towers and associated jacking assemblies shall be completely removed, unless otherwise directed by the Engineer. Shoring tower foundation shall be removed at least 1.0 meter below the original ground.

PAYMENT

The contract lump sum price paid for shoring towers, shall include full compensation for furnishing all labor, materials, tools, equipment and incidentals, and for doing all the work involved in shoring towers, including jacking and shimming the existing structure, as shown on the plans, as specified in the Standard Specifications and these special provisions, and as directed by the Engineer.

SCAFFOLDING

Scaffolding shall be defined in accordance with and shall conform to the Construction Safety Orders of the Division of Occupational Safety and Health and these special provisions.

If scaffolding is constructed for this project over or adjacent to traffic, or suspended from the traveled way, the Contractor shall submit to the Engineer working drawings for scaffolding systems in conformance with Section 5-1.02, "Plans and Working Drawings'" of the Standard Specifications, and these special provisions.

Scaffolding working drawings shall include the following:

A. Descriptions, calculations, and values for all loads anticipated during the erection, use, and removal of scaffolding.
B. Methods and equipment for erecting, moving, and removing scaffolding.
C. Design details including bolt layouts, welding details, and any connections to existing structures.
D. Stress sheets including a summary of computed stresses in the (1) scaffolding, (2) connections between scaffolding and any existing structures and (3) existing load supporting members. The computed stresses shall include the effects of erection, movement, and removal of the scaffolding.

If manufactured scaffolding is used, the manufacturer's name, address, and phone number shall be shown on the working drawings.

The working drawings shall be stamped and signed by an engineer who is registered as a Civil Engineer. In addition, prior to submitting the working drawings to the Engineer, the working drawings shall be stamped and signed by an independent reviewer who is registered as a Civil Engineer in the State of California. The independent reviewer shall not be employed by the same entity preparing the working drawings.

The Contractor shall allow 21 days for the review of a complete submittal for scaffolding working drawings. In the event the Engineer fails to complete the review within the time allowed, and if, in the opinion of the Engineer, completion of the work is delayed or interfered with by reason of the Engineer's delay in completing the review, the Contractor will be compensated for any resulting loss, and an extension of time will be granted, in the same manner as provided for in Section 8-1.09, "Right of Way Delays," of the Standard Specifications.

Welding for the manufacturing and erection of scaffolding shall conform to the requirements in AWS D1.1 or D1.2 for steel or aluminum construction respectively.

Full compensation for conforming to the above requirements shall be considered as included in the contract prices paid for the various contract items of work, and no additional compensation will be allowed therefor.

CONTRACT NO. 04-012024

CONTRACT CHANGE ORDER NO 108

SHEET 167 OF 267

SECTION 8. MATERIALS

8-1.01 SUBSTITUTION OF NON-METRIC MATERIALS AND PRODUCTS

Only materials and products conforming to the requirements of the specifications shall be incorporated in the work. When metric materials and products are not available, and when approved by the Engineer, and at no cost to the State, materials and products in the United States Standard Measures which are of equal quality and of the required properties and characteristics for the purpose intended, may be substituted for the equivalent metric materials and products, subject to the following provisions:

A. Materials and products shown on the plans or in the special provisions as being equivalent may be substituted for the metric materials and products specified or detailed on the plans.

B. Before other non-metric materials and products will be considered for use, the Contractor shall furnish, at the Contractor's expense, evidence satisfactory to the Engineer that the materials and products proposed for use are equal to or better than the materials and products specified or detailed on the plans. The burden of proof as to the quality and suitability of substitutions shall be upon the Contractor and the Contractor shall furnish necessary information as required by the Engineer. The Engineer will be the sole judge as to the quality and suitability of the substituted materials and products and the Engineer's decision will be final.

C. When the Contractor elects to substitute non-metric materials and products, including materials and products shown on the plans or in the special provisions as being equivalent, the list of sources of material specified in Section 6-1.01, "Source of Supply and Quality of Materials," of the Standard Specification shall include a list of substitutions to be made and contract items involved. In addition, for a change in design or details, the Contractor shall submit plans and working drawings in conformance with the provisions in Section 5-1.02, "Plans and Working Drawings," of the Standard Specifications. The plans and working drawings shall be submitted at least 7 days before the Contractor intends to begin the work involved.

Unless otherwise specified, the following substitutions of materials and products will be allowed:

CONTRACT NO. 04-0X2624

CONTRACT CHANGE ORDER NO 108

SHEET 168 OF 267

SUBSTITUTION TABLE FOR PLAIN WIRE REINFORCEMENT
ASTM Designation: A 82

METRIC SIZE SHOWN ON THE PLANS mm^2	SIZE TO BE SUBSTITUTED $inch^2 \times 100$
MW9	W1.4
MW10	W1.6
MW13	W2.0
MW15	W2.3
MW19	W2.9
MW20	W3.1
MW22	W3.5
MW25	W3.9, except W3.5 in piles only
MW26	W4.0
MW30	W4.7
MW32	W5.0
MW35	W5.4
MW40	W6.2
MW45	W6.5
MW50	W7.8
MW55	W8.5, except W8.0 in piles only
MW60	W9.3
MW70	W10.9, except W11.0 in piles only
MW80	W12.4
MW90	W14.0
MW100	W15.5

SUBSTITUTION TABLE FOR BAR REINFORCEMENT

METRIC BAR DESIGNATION NUMBER[1] SHOWN ON THE PLANS	BAR DESIGNATION NUMBER[2] TO BE SUBSTITUTED
10	3
13	4
16	5
19	6
22	7
25	8
29	9
32	10
36	11
43	14
57	18

[1]Bar designation numbers approximate the number of millimeters of the nominal diameter of the bars.

[2]Bar numbers are based on the number of eighths of an inch included in the nominal diameter of the bars.

No adjustment will be required in spacing or total number of reinforcing bars due to a difference in minimum yield strength between metric and non-metric bars.

CONTRACT NO. 04-092024

CONTRACT CHANGE ORDER NO 108

SHEET 169 OF 267

SUBSTITUTION TABLE FOR SIZES OF:

(1) STEEL FASTENERS FOR GENERAL APPLICATIONS (ASTM Designation: A 307 or AASHTO Designation: M 314, Grade 36 or 55), and

(2) HIGH STRENGTH STEEL FASTENERS (ASTM Designation: A 325 or A 449)

METRIC SIZE SHOWN ON THE PLANS mm	SIZE TO BE SUBSTITUTED inch
6 or 6.35	1/4
8 or 7.94	5/16
10 or 9.52	3/8
11 or 11.11	7/16
13, 12.70, or M12	1/2
14 or 14.29	9/16
16, 15.88, or M16	5/8
19, 19.05, or M20	3/4
22, 22.22, or M22	7/8
24, 25, 25.40, or M24	1
29, 28.58, or M27	1-1/8
32, 31.75, or M30	1-1/4
35 or 34.93	1-3/8
38, 38.10, or M36	1-1/2
44 or 44.45	1-3/4
51 or 50.80	2
57 or 57.15	2-1/4
64 or 63.50	2-1/2
70 or 69.85	2-3/4
76 or 76.20	3
83 or 82.55	3-1/4
89 or 88.90	3-1/2
95 or 95.25	3-3/4
102 or 101.60	4

CONTRACT NO. 04-0120R4

CONTRACT CHANGE ORDER NO 108

SHEET 170 OF 267

SUBSTITUTION TABLE FOR NOMINAL THICKNESS OF SHEET METAL

UNCOATED HOT AND COLD ROLLED SHEETS		HOT-DIPPED ZINC COATED SHEETS (GALVANIZED)	
METRIC THICKNESS SHOWN ON THE PLANS mm	GAGE TO BE SUBSTITUTED inch	METRIC THICKNESS SHOWN ON THE PLANS mm	GAGE TO BE SUBSTITUTED inch
7.94	0.3125	4.270	0.1681
6.07	0.2391	3.891	0.1532
5.69	0.2242	3.510	0.1382
5.31	0.2092	3.132	0.1233
4.94	0.1943	2.753	0.1084
4.55	0.1793	2.372	0.0934
4.18	0.1644	1.994	0.0785
3.80	0.1495	1.803	0.0710
3.42	0.1345	1.613	0.0635
3.04	0.1196	1.461	0.0575
2.66	0.1046	1.311	0.0516
2.28	0.0897	1.158	0.0456
1.90	0.0747	1.006 or 1.016	0.0396
1.71	0.0673	0.930	0.0366
1.52	0.0598	0.853	0.0336
1.37	0.0538	0.777	0.0306
1.21	0.0478	0.701	0.0276
1.06	0.0418	0.627	0.0247
0.91	0.0359	0.551	0.0217
0.84	0.0329	0.513	0.0202
0.76	0.0299	0.475	0.0187
0.68	0.0269	--------	--------
0.61	0.0239	--------	--------
0.53	0.0209	--------	--------
0.45	0.0179	--------	--------
0.42	0.0164	--------	--------
0.38	0.0149	--------	--------

CONTRACT NO. 04-012024

CONTRACT CHANGE ORDER NO 1108

SHEET 171 OF 267

SUBSTITUTION TABLE FOR WIRE

METRIC THICKNESS SHOWN ON THE PLANS mm	WIRE THICKNESS TO BE SUBSTITUTED inch	GAGE NO.
6.20	0.244	3
5.72	0.225	4
5.26	0.207	5
4.88	0.192	6
4.50	0.177	7
4.11	0.162	8
3.76	0.148	9
3.43	0.135	10
3.05	0.120	11
2.69	0.106	12
2.34	0.092	13
2.03	0.080	14
1.83	0.072	15
1.57	0.062	16
1.37	0.054	17
1.22	0.048	18
1.04	0.041	19
0.89	0.035	20

SUBSTITUTION TABLE FOR PIPE PILES

METRIC SIZE SHOWN ON THE PLANS mm x mm	SIZE TO BE SUBSTITUTED inch x inch
PP 360 x 4.55	NPS 14 x 0.179
PP 360 x 6.35	NPS 14 x 0.250
PP 360 x 9.53	NPS 14 x 0.375
PP 360 x 11.12	NPS 14 x 0.438
PP 406 x 12.70	NPS 16 x 0.500
PP 460 x T	NPS 18 x T"
PP 508 x T	NPS 20 x T"
PP 559 x T	NPS 22 x T"
PP 610 x T	NPS 24 x T"
PP 660 x T	NPS 26 x T"
PP 711 x T	NPS 28 x T"
PP 762 x T	NPS 30 x T"
PP 813 x T	NPS 32 x T"
PP 864 x T	NPS 34 x T"
PP 914 x T	NPS 36 x T"
PP 965 x T	NPS 38 x T"
PP 1016 x T	NPS 40 x T"
PP 1067 x T	NPS 42 x T"
PP 1118 x T	NPS 44 x T"
PP 1219 x T	NPS 48 x T"
PP 1524 x T	NPS 60 x T"

The thickness in millimeters (T) represents an exact conversion of the thickness in inches (T").

CONTRACT NO. 04-012024

CONTRACT CHANGE ORDER NO 106

SHEET 172 OF 267

SUBSTITUTION TABLE FOR CIDH CONCRETE PILING

METRIC SIZE SHOWN ON THE PLANS	ACTUAL AUGER SIZE TO BE SUBSTITUTED inches
350 mm	14
400 mm	16
450 mm	18
600 mm	24
750 mm	30
900 mm	36
1.0 m	42
1.2 m	48
1.5 m	60
1.8 m	72
2.1 m	84
2.4 m	96
2.7 m	108
3.0 m	120
3.3 m	132
3.6 m	144
4.0 m	156

SUBSTITUTION TABLE FOR STRUCTURAL TIMBER AND LUMBER

METRIC MINIMUM DRESSED DRY, SHOWN ON THE PLANS mm x mm	METRIC MINIMUM DRESSED GREEN, SHOWN ON THE PLANS mm x mm	NOMINAL SIZE TO BE SUBSTITUTED inch x inch
19x89	20x90	1x4
38x89	40x90	2x4
64x89	65x90	3x4
89x89	90x90	4x4
140x140	143x143	6x6
140x184	143x190	6x8
184x184	190x190	8x8
235x235	241x241	10x10
286x286	292x292	12x12

CONTRACT NO. 04-012024

CONTRACT CHANGE ORDER NO 108

SHEET 173 OF 267

SUBSTITUTION TABLE FOR NAILS AND SPIKES

METRIC COMMON NAIL, SHOWN ON THE PLANS Length, mm Diameter, mm	METRIC BOX NAIL, SHOWN ON THE PLANS Length, mm Diameter, mm	METRIC SPIKE, SHOWN ON THE PLANS Length, mm Diameter, mm	SIZE TO BE SUBSTITUTED Penny-weight
50.80 2.87	50.80 2.51	———	6d
63.50 3.33	63.50 2.87	———	8d
76.20 3.76	76.20 3.25	76.20 4.88	10d
82.55 3.76	82.55 3.25	82.55 4.88	12d
88.90 4.11	88.90 3.43	88.90 5.26	16d
101.60 4.88	101.60 3.76	101.60 5.72	20d
114.30 5.26	114.30 3.76	114.30 6.20	30d
127.00 5.72	127.00 4.11	127.00 6.68	40d
———	———	139.70 7.19	50d
———	———	152.40 7.19	60d

CONTRACT NO. 04-012024

CONTRACT CHANGE ORDER NO 108

SHEET 174 OF 267

SUBSTITUTION TABLE FOR IRRIGATION COMPONENTS

METRIC WATER METERS, TRUCK LOADING STANDPIPES, VALVES, BACKFLOW PREVENTERS, FLOW SENSORS, WYE STRAINERS, FILTER ASSEMBLY UNITS, PIPE SUPPLY LINES, AND PIPE IRRIGATION SUPPLY LINES SHOWN ON THE PLANS DIAMETER NOMINAL (DN) mm	NOMINAL SIZE TO BE SUBSTITUTED inch
15	1/2
20	3/4
25	1
32	1-1/4
40	1-1/2
50	2
65	2-1/2
75	3
100	4
150	6
200	8
250	10
300	12
350	14
400	16

Unless otherwise specified, substitutions of United States Standard Measures standard structural shapes corresponding to the metric designations shown on the plans and in conformance with the requirements in ASTM Designation: A 6/A 6M, Annex 2, will be allowed.

SECTION 8-2. CONCRETE

8-2.__ PORTLAND CEMENT CONCRETE

Portland cement concrete shall conform to the provisions in Section 90, "Portland Cement Concrete," of the Standard Specifications and these special provisions.

References to Section 90-2.01, "Portland Cement," of the Standard Specifications shall mean Section 90-2.01, "Cement," of the Standard Specifications.

Mineral admixture shall be combined with cement in conformance with the provisions in Section 90-4.08, "Required Use of Mineral Admixtures," of the Standard Specifications for the concrete materials specified in Section 56-2, "Roadside Signs," of the Standard Specifications.

The requirements of Section 90-4.08, "Required Use of Mineral Admixture," of the Standard Specifications shall not apply to Section 19-3.025C, "Soil Cement Bedding," of the Standard Specifications.

The Department maintains a list of sources of fine and coarse aggregate that have been approved for use with a reduced amount of mineral admixture in the total amount of cementitious material to be used. A source of aggregate will be considered for addition to the approved list if

CONTRACT NO. 04-0120R4

CONTRACT CHANGE ORDER NO 1095

SHEET 175 OF 267

the producer of the aggregate submits to the Transportation Laboratory certified test results from a qualified testing laboratory that verify the aggregate complies with the requirements. Prior to starting the testing, the aggregate test shall be registered with the Department. A registration number can be obtained by calling (916) 227-7228. The registration number shall be used as the identification for the aggregate sample in correspondence with the Department. Upon request, a split of the tested sample shall be provided to the Department. Approval of aggregate will depend upon compliance with the specifications, based on the certified test results submitted, together with any replicate testing the Department may elect to perform. Approval will expire 3 years from the date the most recent registered and evaluated sample was collected from the aggregate source.

Qualified testing laboratories shall conform to the following requirements:

A. Laboratories performing ASTM Designation: C 1293 shall participate in the Cement and Concrete Reference Laboratory (CCRL) Concrete Proficiency Sample Program and shall have received a score of 3 or better on all tests of the previous 2 sets of concrete samples.
B. Laboratories performing ASTM Designation: C 1260 shall participate in the Cement and Concrete Reference Laboratory (CCRL) Pozzolan Proficiency Sample Program and shall have received a score of 3 or better on the shrinkage and soundness tests of the previous 2 sets of pozzolan samples.

Aggregates on the list shall conform to one of the following requirements:

A. When the aggregate is tested in conformance with the requirements in California Test 554 and ASTM Designation: C 1293, the average expansion at one year shall be less than or equal to 0.040 percent; or
B. When the aggregate is tested in conformance with the requirements in California Test 554 and ASTM Designation: C 1260, the average of the expansion at 16 days shall be less than or equal to 0.15 percent.

The amounts of cement and mineral admixture used in cementitious material shall be sufficient to satisfy the minimum cementitious material content requirements specified in Section 90-1.01, "Description," or Section 90-4.05, "Optional Use of Chemical Admixtures," of the Standard Specifications and shall conform to the following:

A. The minimum amount of cement shall not be less than 75 percent by mass of the specified minimum cementitious material content.
B. The minimum amount of mineral admixture to be combined with cement shall be determined using one of the following criteria:

    1. When the calcium oxide content of a mineral admixture is equal to or less than 2 percent by mass, the amount of mineral admixture shall not be less than 15 percent by mass of the total amount of cementitious material to be used in the mix.
    2. When the calcium oxide content of a mineral admixture is greater than 2 percent by mass, and any of the aggregates used are not listed on the approved list as specified in these special provisions, then the amount of mineral admixture shall not be less than 25 percent by mass of the total amount of cementitious material to be used in the mix.
    3. When the calcium oxide content of a mineral admixture is greater than 2 percent by mass and the fine and coarse aggregates are listed on the approved list as specified in

CONTRACT NO. 04-012024

CONTRACT CHANGE ORDER NO 108

SHEET 176 OF 267

these special provisions, then the amount of mineral admixture shall not be less than 15 percent by mass of the total amount of cementitious material to be used in the mix.

4. When a mineral admixture that conforms to the provisions for silica fume in Section 90-2.04, "Admixture Materials," of the Standard Specifications is used, the amount of mineral admixture shall not be less than 10 percent by mass of the total amount of cementitious material to be used in the mix.
5. When a mineral admixture that conforms to the provisions for silica fume in Section 90-2.04, "Admixture Materials," of the Standard Specifications is used and the fine and coarse aggregates are listed on the approved list as specified in these special provisions, then the amount of mineral admixture shall not be less than 7 percent by mass of the total amount of cementitious material to be used in the mix.

C. The total amount of mineral admixture shall not exceed 35 percent by mass of the total amount of cementitious material to be used in the mix. Where Section 90-1.01, "Description," of the Standard Specifications specifies a maximum cementitious content in kilograms per cubic meter, the total mass of cement and mineral admixture per cubic meter shall not exceed the specified maximum cementitious material content.

SECTION 8-3. WELDING

8-3.__ WELDING

GENERAL

Flux cored welding electrodes conforming to the requirements of AWS A5.20 E6XT-4 or E7XT-4 shall not be used to perform welding for this project.

Wherever reference is made to the following AWS welding codes in the Standard Specifications, on the plans, or in these special provisions, the year of adoption for these codes shall be as listed:

AWS Code	Year of Adoption
D1.1	2006
D1.4	2005
D1.5	2002
D1.6	1999

Requirements of the AWS welding codes shall apply unless otherwise specified in the Standard Specifications, on the plans, or in these special provisions. Wherever the abbreviation AWS is used, it shall be equivalent to the abbreviations ANSI/AWS or AASHTO/AWS.

Section 6.1.1.1 of AWS D1.5 is replaced with the following:

Quality Control (QC) shall be the responsibility of the Contractor. As a minimum, the Contractor shall perform inspection and testing of each weld joint prior to welding, during welding, and after welding as specified in this section and as necessary to ensure that materials and workmanship conform to the requirements of the contract documents.

Unless otherwise specified, Sections 6.1.3 through 6.1.4.3 of AWS D1.1, Section 7.1.2 of AWS D1.4, and Sections 6.1.1.2 through 6.1.3.3 of AWS D1.5 are replaced with the following:

CONTRACT NO. 04-012024

CONTRACT CHANGE ORDER NO 108

SHEET 177 OF 267

The QC Inspector shall be the duly designated person who acts for and on behalf of the Contractor for inspection, testing, and quality related matters for all welding.

Quality Assurance (QA) is the prerogative of the Engineer. The QA Inspector is the duly designated person who acts for and on behalf of the Engineer.

The QC Inspector shall be responsible for quality control acceptance or rejection of materials and workmanship, and shall be currently certified as an AWS Certified Welding Inspector (CWI) in conformance with the requirements in AWS QC1, "Standard for AWS Certification of Welding Inspectors."

The QC Inspector may be assisted by an Assistant QC Inspector provided that this individual is currently certified as an AWS Certified Associate Welding Inspector (CAWI) in conformance with the requirements in AWS QC1, "Standard for AWS Certification of Welding Inspectors." The Assistant QC Inspector may perform inspection under the direct supervision of the QC Inspector provided the assistant is always within visible and audible range of the QC Inspector. The QC Inspector shall be responsible for signing all reports and for determining if welded materials conform to workmanship and acceptance criteria. The ratio of QC Assistants to QC Inspectors shall not exceed 5 to 1.

When the term "Inspector" is used without further qualification, it shall refer to the QC Inspector.

When any work is welded in conformance with the provisions in Section 75, "Miscellaneous Metal," of the Standard Specifications, not including Section 75-1.035, "Bridge Joint Restrainer Units," of the Standard Specifications, Section 6.1.4 of AWS D1.1 is replaced with the following:

The QC Inspector shall be responsible for quality control acceptance or rejection of materials and workmanship and shall be currently certified as an AWS CWI in conformance with the requirements in AWS QC1, "Standard for AWS Certification of Welding Inspectors," or as a Welding Inspector Specialist (WIS) in conformance with the requirements in AWS B5.2, "Specification for the Qualification of Welding Inspector Specialists and Welding Inspector Assistants."

Section 6.14.6, "Personnel Qualification," of AWS D1.1, Section 7.8, "Personnel Qualification," of AWS D1.4, and Section 6.1.3.4, "Personnel Qualification," of AWS D1.5 are replaced with the following:

Personnel performing nondestructive testing (NDT) shall be qualified and certified in conformance with the requirements of the American Society for Nondestructive Testing (ASNT) Recommended Practice No. SNT-TC-1A and the Written Practice of the NDT firm. The Written Practice of the NDT firm shall meet or exceed the guidelines of the ASNT Recommended Practice No. SNT-TC-1A. Individuals who perform NDT, review the results, and prepare the written reports shall be either:

A. Certified NDT Level II technicians, or;
B. Level III technicians who hold a current ASNT Level III certificate in that discipline and are authorized and certified to perform the work of Level II technicians.

Section 6.5.4 of AWS D1.5 is replaced with the following:

CONTRACT NO. 04-012024

CONTRACT CHANGE ORDER NO 1058

SHEET 178 OF 267

The QC Inspector shall inspect and approve each joint preparation, assembly practice, welding technique, joint fit-up, and the performance of each welder, welding operator, and tack welder to make certain that the applicable requirements of this code and the approved Welding Procedure Specification (WPS) are met. The QC Inspector shall examine the work to make certain that it meets the requirements of Sections 3 and 6.26. The size and contour of all welds shall be measured using suitable gages. Visual inspection for cracks in welds and base metal, and for other discontinuities shall be aided by strong light, magnifiers, or such other devices as may be helpful. Acceptance criteria different from those specified in this code may be used when approved by the Engineer.

Section 6.6.5, "Nonspecified NDT Other than Visual," of AWS D1.1, Section 7.6.5 of AWS D1.4 and Section 6.6.5 of AWS D1.5 shall not apply.

For any welding, the Engineer may direct the Contractor to perform NDT that is in addition to the visual inspection or NDT specified in the AWS or other specified welding codes, in the Standard Specifications, or in these special provisions. Except as provided for in these special provisions, additional NDT required by the Engineer, and associated repair work, will be paid for as extra work as provided in Section 4-1.03D, "Extra Work," of the Standard Specifications. Prior to release of welded material by the Engineer, if testing by NDT methods other than those originally specified discloses an attempt to defraud or reveals a gross nonconformance, all costs associated with the repair of the deficient area, including NDT of the weld and of the repair, and any delays caused by the repair, shall be at the Contractor's expense. A gross nonconformance is defined as the sum of planar type rejectable indications in more than 20 percent of the tested length.

When less than 100 percent of NDT is specified for any weld, it is expected that the entire length of weld meet the specified acceptance-rejection criteria. Should any welding deficiencies be discovered by additional NDT directed or performed by the Engineer that utilizes the same NDT method as that originally specified, all costs associated with the repair of the deficient area, including NDT of the weld and of the weld repair, and any delays caused by the repair, shall be at the Contractor's expense.

Repair work to correct welding deficiencies discovered by visual inspection directed or performed by the Engineer, and any associated delays or expenses caused to the Contractor by performing these repairs, shall be at the Contractor's expense.

The Engineer shall have the authority to verify the qualifications or certifications of any welder, QC Inspector, or NDT personnel to specified levels by retests or other means approved by the Engineer.

Inspection and approval of all joint preparations, assembly practices, joint fit-ups, welding techniques, and the performance of each welder, welding operator, and tack welder shall be documented by the QC Inspector on a daily basis for each day welding is performed. For each inspection, including fit-up, Welding Procedure Specification (WPS) verification, and final weld inspection, the QC Inspector shall confirm and document compliance with the requirements of the AWS or other specified code criteria and the requirements of these special provisions on all welded joints before welding, during welding, and after the completion of each weld.

In addition to the requirements specified in the applicable code, the period of effectiveness for a welder's or welding operator's qualification shall be a maximum of 3 years for the same weld process, welding position, and weld type. If welding will be performed without gas shielding, then qualification shall also be without gas shielding. Excluding welding of fracture critical members, a valid qualification at the beginning of work on a contract will be acceptable

CONTRACT NO. 04-012024

CONTRACT CHANGE ORDER NO 108

SHEET 179 OF 267

for the entire period of the contract, as long as the welder's or welding operator's work remains satisfactory.

In addition to the requirements of AWS D1.1, welding procedures qualification for work welded in conformance with that code shall conform to the following requirements:

A. The travel speed, amperage, and voltage values that are used for tests conducted per AWS D1.1, Section 4.1.1, shall be consistent for each pass in a weld joint and shall in no case vary by more than ±10 percent for travel speed, ±10 percent for amperage, and ±7 percent for voltage as measured from a predetermined target value or average within each weld pass. The travel speed shall in no case vary by more than ±15 percent when using submerged arc welding.
B. When a nonstandard weld joint is to be made using a combination of WPSs, a single test may be conducted combining the WPSs to be used in production, provided the essential variables, including weld bead placement, of each process are limited to those established in Table 4.5.

In addition to the requirements of AWS D1.5, Section 5.12 or 5.13, welding procedures qualification for work welded in conformance with that code shall conform to the following requirements:

A. Unless considered prequalified, fillet welds shall be qualified in each position. The fillet weld soundness test shall be conducted using the essential variables of the WPS as established by the Procedure Qualification Record (PQR).
B. For qualification of joints that do not conform to Figures 2.4 and 2.5 of AWS D1.5, a minimum of two WPS qualification tests are required. The tests shall be conducted using both Figure 5.1 and Figure 5.3. The test conforming to Figure 5.1 shall be conducted in conformance with AWS D1.5, Section 5.12 or 5.13. The test conforming to Figure 5.3 shall be conducted using the welding electrical parameters that were established for the test conducted conforming to Figure 5.1. The ranges of welding electrical parameters established during welding per Figure 5.1 in conformance with AWS D1.5, Section 5.12, shall be further restricted according to the limits in Table 5.3 during welding per Figure 5.3.
C. Multiple zones within a weld joint may be qualified. The travel speed, amperage, and voltage values that are used for tests conducted per AWS D1.5 Section 5.13 shall be consistent for each pass in a weld joint, and shall in no case vary by more than ±10 percent for travel speed, ±10 percent for amperage, and ±7 percent for voltage as measured from a predetermined target value or average within each weld pass or zone. The travel speed shall in no case vary by more than ±15 percent when using submerged arc welding.
D. For a WPS qualified in conformance with AWS D1.5 Section 5.13, the values to be used for calculating ranges for current and voltage shall be based on the average of all weld passes made in the test. Heat input shall be calculated using the average of current and voltage of all weld passes made in the test for a WPS qualified in conformance with Section 5.12 or 5.13.
E. Macroetch tests are required for WPS qualification tests, and acceptance shall be per AWS D1.5 Section 5.19.3.
F. When a nonstandard weld joint is to be made using a combination of WPSs, a test conforming to Figure 5.3 may be conducted combining the WPSs to be used in

CONTRACT NO. 04-012024

CONTRACT CHANGE ORDER NO 1058

SHEET 180 OF 267

production, provided the essential variables, including weld bead placement, of each process are limited to those established in Table 5.3.

G. Prior to preparing mechanical test specimens, the PQR welds shall be inspected by visual and radiographic tests. Backing bar shall be 75 mm in width and shall remain in place during NDT testing. Results of the visual and radiographic tests shall comply with AWS D1.5 Section 6.26.2, excluding Section 6.26.2.2. Test plates that do not comply with both tests shall not be used.

WELDING QUALITY CONTROL

Welding quality control shall conform to the requirements in the AWS or other specified welding codes, the Standard Specifications, and these special provisions.

Unless otherwise specified, welding quality control shall apply when any work is welded in conformance with the provisions in Section 49, "Piling," Section 52, "Reinforcement," Section 55, "Steel Structures," or Section 75-1.035, "Bridge Joint Restrainer Units," of the Standard Specifications.

All welding will require inspection by the Engineer. The Contractor shall request inspection at least 3 working days prior to the beginning of welding for locations within California and 5 working days for locations outside of California. The Contractor shall request inspection at:

http://www.dot.ca.gov/hq/esc/Translab/smbforms.htm

Continuous inspection shall be provided when any welding is being performed. Continuous inspection, as a minimum, shall include having a QC Inspector within such close proximity of all welders or welding operators so that inspections by the QC Inspector of each welding operation at each welding location does not lapse for a period exceeding 30 minutes.

When joint weld details that are not prequalified to the details of Section 3 of AWS D1.1 or to the details of Figure 2.4 or 2.5 of AWS D1.5 are proposed for use in the work, the joint details, their intended locations, and the proposed welding parameters and essential variables, shall be approved by the Engineer. The Contractor shall allow the Engineer 2 weeks to complete the review of the proposed joint detail locations. In the event the Engineer fails to complete the review within the time allowed, and if, in the opinion of the Engineer, completion of the work is delayed or interfered with by reason of the Engineer's delay in completing the review, the Contractor will be compensated for any resulting loss, and an extension of time will be granted, in the same manner as provided for in Section 8-1.09, "Right of Way Delays," of the Standard Specifications. Upon approval of the proposed joint detail locations and qualification of the proposed joint details, welders and welding operators using these details shall perform a qualification test plate using the WPS variables and the joint detail to be used in production. The test plate shall have the maximum thickness to be used in production and a minimum length of 460 mm. The test plate shall be mechanically and radiographically tested. Mechanical and radiographic testing and acceptance criteria shall be as specified in the applicable AWS codes.

The Engineer will witness all qualification tests for WPSs that were not previously approved by the Department. Unless otherwise specified, an approved independent third party will witness the qualification tests for welders or welding operators. The independent third party shall be a current CWI and shall not be an employee of the contractor performing the welding. The Contractor shall allow the Engineer 2 weeks to review the qualifications and copy of the current certification of the independent third party. In the event the Engineer fails to complete the review within the time allowed, and if, in the opinion of the Engineer, completion of the work is delayed or interfered with by reason of the Engineer's delay in completing the review, the Contractor will

be compensated for any resulting loss, and an extension of time will be granted, in the same manner as provided for in Section 8-1.09, "Right of Way Delays," of the Standard Specifications. The Contractor shall notify the Engineer one week prior to performing any qualification tests. Witnessing of qualification tests by the Engineer shall not constitute approval of the intended joint locations, welding parameters, or essential variables.

The Contractor shall designate in writing a welding Quality Control Manager (QCM). The QCM shall be responsible directly to the Contractor for the quality of welding, including materials and workmanship, performed by the Contractor and subcontractors.

The QCM shall be the sole individual responsible to the Contractor for submitting, receiving, reviewing, and approving all correspondence, required submittals, and reports to and from the Engineer. The QCM shall be a registered professional engineer or shall be currently certified as a CWI.

Unless the QCM is hired by a subcontractor providing only QC services, the QCM shall not be employed or compensated by any subcontractor, or by other persons or entities hired by subcontractors, who will provide other services or materials for the project. The QCM may be an employee of the Contractor.

Welding inspection personnel or NDT firms to be used in the work shall not be employed or compensated by any subcontractor, or by other persons or entities hired by subcontractors, who will provide other services or materials for the project, except for the following conditions:

A. The work is welded in conformance with AWS D1.5 and is performed at a permanent fabrication or manufacturing facility that is certified under the AISC Quality Certification Program, Category Cbr, Major Steel Bridges and Fracture Critical endorsement F, when applicable.
B. The welding is performed on pipe pile material at a permanent pipe manufacturing facility authorized to apply the American Petroleum Institute (API) monogram for API 5L pipe.

For welding performed at such facilities, the inspection personnel or NDT firms may be employed or compensated by the facility performing the welding provided the facility maintains a QC program that is independent from production.

Prior to submitting the Welding Quality Control Plan (WQCP) required herein, a prewelding meeting between the Engineer, the Contractor's QCM, and a representative from each entity performing welding or inspection for this project, shall be held to discuss the requirements for the WQCP.

The Contractor shall submit to the Engineer, in conformance with the provisions in Section 5-1.02, "Plans and Working Drawings," of the Standard Specifications, 2 copies of a separate WQCP for each subcontractor or supplier for each item of work for which welding is to be performed.

The Contractor shall allow the Engineer 2 weeks to review the WQCP submittal after a complete plan has been received. No welding shall be performed until the WQCP is approved in writing by the Engineer. In the event the Engineer fails to complete the review within the time allowed, and if, in the opinion of the Engineer, completion of the work is delayed or interfered with by reason of the Engineer's delay in completing the review, the Contractor will be compensated for any resulting loss, and an extension of time will be granted, in the same manner as provided for in Section 8-1.09, "Right of Way Delays," of the Standard Specifications.

An amended WQCP or any addendum to the approved WQCP shall be submitted to, and approved in writing by the Engineer, for proposed revisions to the approved WQCP. An

CONTRACT NO. 04-0\20\24

CONTRACT CHANGE ORDER NO 108

SHEET 182 OF 267

amended WQCP or addendum will be required for revisions to the WQCP, including but not limited to a revised WPS; additional welders; changes in NDT firms, QC, or NDT personnel or procedures; or updated systems for tracking and identifying welds. The Engineer shall have one week to complete the review of the amended WQCP or addendum. Work affected by the proposed revisions shall not be performed until the amended WQCP or addendum has been approved. In the event the Engineer fails to complete the review within the time allowed, and if, in the opinion of the Engineer, completion of the work is delayed or interfered with by reason of the Engineer's delay in completing the review, the Contractor will be compensated for any resulting loss, and an extension of time will be granted, in the same manner as provided for in Section 8-1.09, "Right of Way Delays," of the Standard Specifications.

Information regarding the contents, format, and organization of a WQCP, is available at the Transportation Laboratory and at:

http://www.dot.ca.gov/hq/esc/Translab/smbresources.htm

After final approval of the WQCP, amended WQCP, or addendum, the Contractor shall submit 7 copies to the Engineer of the approved documents. A copy of the Engineer approved document shall be available at each location where welding is to be performed.

A daily production log for welding shall be kept for each day that welding is performed. The log shall clearly indicate the locations of all welding. The log shall include the welders' names, amount of welding performed, any problems or deficiencies discovered, and any testing or repair work performed, at each location. The daily report from each QC Inspector shall also be included in the log.

The following items shall be included in a Welding Report that is to be submitted to the Engineer within 2 weeks following the performance of any welding:

A. A daily production log.
B. Reports of all visual weld inspections and NDT.
C. Radiographs and radiographic reports, and other required NDT reports.
D. A summary of welding and NDT activities that occurred during the reporting period.
E. Reports of each application of heat straightening.
F. A summarized log listing the rejected lengths of weld by welder, position, process, joint configuration, and piece number.
G. Documentation that the Contractor has evaluated all radiographs and other nondestructive tests and corrected all rejectable deficiencies, and that all repaired welds have been reexamined using the required NDT and found acceptable.

The following information shall be clearly written on the outside of radiographic envelopes: name of the QCM, name of the nondestructive testing firm, name of the radiographer, date, contract number, complete part description, and all included weld numbers, report numbers, and station markers or views, as detailed in the WQCP. In addition, all interleaves shall have clearly written on them the part description and all included weld numbers and station markers or views, as detailed in the WQCP. A maximum of 2 pieces of film shall be used for each interleave.

Reports of all visual inspections and NDT shall be signed by the inspector or technician and submitted daily to the QCM for review and signature prior to submittal to the Engineer. Corresponding names shall be clearly printed or typewritten next to all signatures. Reports of all NDT, whether specified, additional, or informational, performed by the Contractor shall be submitted to the Engineer.

The Engineer will review the Welding Report to determine if the Contractor is in conformance with the WQCP. Unless otherwise specified, the Engineer shall be allowed 2 weeks to review the report and respond in writing after the complete Welding Report has been received. Prior to receiving notification from the Engineer of the Contractor's conformance with the WQCP, the Contractor may encase in concrete or cover welds for which the Welding Report has been submitted. However, should the Contractor elect to encase or cover those welds prior to receiving notification from the Engineer, it is expressly understood that the Contractor shall not be relieved of the responsibility for incorporating material in the work that conforms to the requirements of the plans and specifications. Material not conforming to these requirements will be subject to rejection. Should the Contractor elect to wait to encase or cover welds pending notification by the Engineer, and in the event the Engineer fails to complete the review within the time allowed, and if, in the opinion of the Engineer, completion of the work is delayed or interfered with by reason of the Engineer's delay in completing the review, the Contractor will be compensated for any resulting loss, and an extension of time will be granted, in the same manner as provided for in Section 8-1.09, "Right of Way Delays," of the Standard Specifications.

In addition to the requirements in AWS D1.1 and AWS D1.5, second-time excavations of welds or base metal to repair unacceptable discontinuities, regardless of NDT method, and all repairs of cracks require prior approval of the Engineer.

The Engineer shall be notified immediately in writing when welding problems, deficiencies, base metal repairs, or any other type of repairs not submitted in the WQCP are discovered, and also of the proposed repair procedures to correct them. For requests to perform second-time repairs or repairs of cracks, the Contractor shall include an engineering evaluation of the proposed repair. The engineering evaluation, at a minimum, shall address the following:

A. What is causing each defect?
B. Why the repair will not degrade the material properties?
C. What steps are being taken to prevent similar defects from happening again?

The Contractor shall allow the Engineer one week to review these procedures. No remedial work shall begin until the repair procedures are approved in writing by the Engineer. In the event the Engineer fails to complete the review within the time allowed, and if, in the opinion of the Engineer, completion of the work is delayed or interfered with by reason of the Engineer's delay in completing the review, the Contractor will be compensated for any resulting loss, and an extension of time will be granted, in the same manner as provided for in Section 8-1.09, "Right of Way Delays," of the Standard Specifications.

The QCM shall sign and furnish to the Engineer, a Certificate of Compliance in conformance with the provisions in Section 6-1.07, "Certificates of Compliance," of the Standard Specifications for each item of work for which welding was performed. The certificate shall state that all of the materials and workmanship incorporated in the work, and all required tests and inspections of this work, have been performed in conformance with the details shown on the plans, the Standard Specifications, and these special provisions.

PAYMENT

Full compensation for conforming to the requirements of "Welding" shall be considered as included in the contract prices paid for the various items of work involved and no additional compensation will be allowed therefor.

CONTRACT NO. 04-012024

CONTRACT CHANGE ORDER NO 108

SHEET 184 OF 267

SECTION 9. DESCRIPTION OF BRIDGE WORK

The bridge work to be done consists, in general, of constructing the following bridge, shoring and jacking the existing bridge and removing portions of the existing bridge as shown on the plans:

WEST TIE IN PHASE 2
(Bridge No 34-0006)

SECTION 10. CONSTRUCTION DETAILS

SECTION 10-1. GENERAL

10-1.01 ORDER OF WORK

Order of work shall conform to the provisions in Section 5-1.05, "Order of Work," of the Standard Specifications and these special provisions.

Bridge construction, jacking and removal sequence shall be according to the sequence shown on the plans.

10-1.__ EXISTING HIGHWAY FACILITIES

The work performed in connection with various existing highway facilities shall conform to the provisions in Section 15, "Existing Highway Facilities," of the Standard Specifications and these special provisions.

10-1.__JACK BRIDGE

Jack bridge shall consist of jacking bridge superstructure at jacking corbels and at Right Columns in conformance with the details shown on the plans and these special provisions.

The Contractor shall design, furnish, operate, monitor and remove the jacking and support system with appurtenant items as necessary to jack and shim the structure in a controlled manner.

The construction sequence and application of jacking loads shall be as shown on the plans. Proposed changes to the construction sequence and application of jacking loads shall be subject to the Engineer's approval.

Attention is directed to Section "Maintaining Traffic" and "Falsework" of these special provisions.

The Contractor shall provide a designated field engineer who is registered as a Civil Engineer in the State California. The Contractor's designated field engineer shall be present at the jobsite throughout the jacking operations.

Load Monitoring

The Contractor shall provide load cells at each jack capable of continuously reporting accurate loadings for the duration the jack is in operation. The load cells shall be approved by the Engineer.

CONTRACT NO. 04-0120R4

CONTRACT CHANGE ORDER NO 108

SHEET 185 OF 267

WORKING DRAWINGS

The Contractor shall submit to the Engineer working drawings and design calculations for jacking bridge. Such drawings and design calculations shall be signed by an engineer who is registered as a Civil Engineer in the State of California.

In addition to the requirements in Section 51-1.06A, "Falsework Design and Drawings," of the Standard Specifications, bridge jacking working drawings shall include the following:

A. Complete description and details of methods, equipment and sequence for jacking the structure in a safe and controlled manner.
B. Complete details of methods, equipment and sequence of operations to achieve final lines and grades relative to the existing structure as shown on the plans
C. Description, location, and value of all loads including construction equipment loads
D. Details for:
    1. Jacking system with appurtenant items
    2. Vertical displacement monitoring system
    3. Jacking load monitoring plan
    4. Bent cap adjustment procedure as shown on the plans

After complete working drawings and all supporting data are submitted, the Contractor shall allow 3 weeks for the Engineer's review of each submittal.

The design load for jacking bridge shall consist of the largest combined load demand from the following:

A. The dead load of the superstructure and horizontal loads
B. The proposed jacking forces
C. Live loads plus impact
D. The dead loads and live loads due to the Contractor's equipment and operations

Approval by the Engineer of the bridge jacking working drawings or bridge inspection performed by the Engineer will in no way relieve the Contractor of full responsibility for jacking bridge.

CONSTRUCTION

The Contractor's registered engineer shall be present at the bridge site at all times when jacking operations or adjustments are in progress. Should an unplanned event occur, the Contractor's registered engineer shall submit immediately to the Engineer for approval, the procedure or proposed operation to correct or remedy the occurrence.

The Contractor shall perform an initial survey as part of the displacement monitoring system to record the location of the existing structure prior to commencement of any work. Two copies of the survey shall be signed by an engineer who is registered as a Civil Engineer in the State of California, and submitted to the Engineer.

Vandal-resistant displacement monitoring equipment shall be provided and maintained. Vertical displacements of the existing structure shall be monitored continuously during jacking operations and shall be accurately measured and recorded daily during reconstruction work. As a minimum, elevations shall be taken prior to the start of jacking operations, immediately after jacking is complete, after prestressing the Right Columns, after each jacking adjustment until

CONTRACT NO. 04-0120R4

CONTRACT CHANGE ORDER NO 1 08

SHEET 186 OF 267

successful load transfer is attained and 60 days after successful load transfer, as shown on the plans. As a minimum, the existing structure shall be monitored at the bent and at mid span. Control points at each location shall be located at the edge of the superstructure. The records of vertical displacement shall be signed by an engineer who is registered as a Civil Engineer in the State of California and available to the Engineer at the jobsite during normal working hours, and a copy of the record shall be delivered to the Engineer at the completion of the work.

Manufactured Assemblies

Manufactured assemblies shall conform to the provisions in Section 51-1.06A(2), "Design Stresses, Loadings, and Deflections," of the Standard Specifications and these special provisions.

Each jack shall be equipped with a pressure gage and a load cell for determining the jacking force. Pressure gages shall have an accuracy reading dial at least 150 mm in diameter. Each jack shall be calibrated by a private laboratory approved by the Transportation Laboratory within 6 months prior to use and after each repair. Each jack and its gage shall be calibrated as a unit with the cylinder extension in the approximate position that it will be at final jacking force and shall be accompanied by a certified calibration chart. Load cells shall be calibrated and provided with an indicator by which the jacking force is determined.

JACKING OPERATIONS

Jacking operations shall be carefully controlled and monitored to ensure that the jacking loads are applied simultaneously to prevent distortion and excessive stresses that would damage the structure. The superstructure shall be jacked as necessary to maintain the total vertical displacements at control points to the values shown on the plans.

A redundant system of supports shall be provided during the entire jacking operations for backup should any of the jacks fail. The redundant system shall include stacks of steel plates added as necessary to maintain the redundant supports at each jack location within 6 mm of the jacking sill or corbels.

Adequate means shall be employed to prevent unplanned lateral and longitudinal movement of the superstructure. The jacking and support system and the superstructure shall be stable during all phases of the operation.

Should unanticipated displacements, cracking or other damage occur, the construction shall be discontinued until corrective measures satisfactory to the Engineer are performed. Damage to the structure as a result of the Contractor's operations shall be repaired by the Contractor in conformance with the provisions in Section 7-1.11, "Preservation of Property," of the Standard Specifications.

Jacking assemblies shall remain in place as necessary to support the structure until successful load transfer has been attained as shown on the plans.

After post-tensioning of WTI Bents 40 through 45B, the Contractor shall perform jacking adjustments at the WTI Right Columns, as necessary, to achieve successful load transfer. Successful load transfer is achieved when target loads are within the range shown on the plans and the Edge Beam profile is acceptable to the Engineer.

When no longer needed, attachments shall be removed from the structure and concrete surfaces restored to original conditions, except where permanent alterations are shown on the plans.

When jacking assemblies are no longer needed, they shall become the property of the Contractor and shall be disposed of in conformance with the provisions in Section 7-1.13, "Disposal of Material Outside the Highway Right of Way," of the Standard Specifications.

CONTRACT NO. 04-0K2024

CONTRACT CHANGE ORDER NO 108

SHEET 187 OF 267

PAYMENT

The contract lump sum price paid for jack bridge shall include full compensation for furnishing all labor, materials, tools, equipment and incidentals, and for doing all the work involved in designing, constructing, maintaining, and removing the bridge jacking system, including monitoring jacking loads, performing jacking adjustments and monitoring displacements, as shown on the plans, as specified in the Standard Specifications and these special provisions, and as directed by the Engineer.

BRIDGE REMOVAL (PORTION)

Removing bridges or portions of bridges shall conform to the provisions in Section 15-4, "Bridge Removal," of the Standard Specifications and these special provisions.

Remove existing columns, retaining wall, soil nail wall, PCC slab, metal railing, steel casing and filled materials as shown on the plans.

WEST TIE IN PHASE 2
(Bridge No. 34-0006 L/R)

Removed materials that are not to be salvaged or used in the reconstruction shall become the property of the Contractor and shall be disposed of in conformance with the provisions in Section 7-1.13, "Disposal of Material Outside the Highway Right of Way," of the Standard Specifications.

Full compensation for cleaning out soil from inside pipe casing where shown on the plans shall be considered as included in the contract lump sum price paid for bridge removal (portion) and no additional compensation will be allowed therefor.

The Contractor shall submit a complete bridge removal plan to the Engineer for each bridge listed above, detailing procedures, sequences, and all features required to perform the removal in a safe and controlled manner.

The bridge removal plan shall include, but not be limited to the following:

A. The removal sequence, including staging of removal operations.
B. Equipment locations on the structure during removal operations.
C. Temporary support shoring or temporary bracing.
D Locations where work is to be performed over traffic or utilities.
E. Details, locations, and types of protective covers to be used.
F. Measures to assure that people, property, utilities, and improvements will not be endangered.
G. Details and measures for preventing material, equipment, and debris from falling onto public traffic.

When protective covers are required for removal of portions of a bridge, or when superstructure removal works on bridges are involved, the Contractor shall submit working drawings, with design calculations, to the Engineer for the proposed bridge removal plan, and the bridge removal plan shall be prepared and signed by an engineer who is registered as a Civil Engineer in the State of California. The design calculations shall be adequate to demonstrate the stability of the structure during all stages of the removal operations. Calculations shall be

CONTRACT NO. 04-012024

CONTRACT CHANGE ORDER NO 108

SHEET 188 OF 267

provided for each stage of bridge removal and shall include dead and live load values assumed in the design of protective covers. At a minimum, a stage will be considered to be removal of the deck, the soffit, or the girders, in any span; or walls, bent caps, or columns at support locations.

Temporary support shoring, temporary bracing, and protective covers, as required, shall be designed and constructed in conformance with the provisions in Section 51-1.06, "Falsework," of the Standard Specifications and these special provisions.

The assumed horizontal load to be resisted by the temporary support shoring and temporary bracing, for removal operations only, shall be the sum of the actual horizontal loads due to equipment, construction sequence or other causes, and an allowance for wind, but in no case shall the assumed horizontal load to be resisted in any direction be less than 5 percent of the total dead load of the structure to be removed.

Temporary support shoring, temporary bracing, and protective covers shall not encroach closer than 2.4 m horizontally from the edge or 4.6 m vertically above any traffic lane or shoulder that is open to public traffic.

The bridge removal plan shall conform to the provisions in Section "Working Drawings" of these special provisions. The number of sets of drawings, design calculations, and unless otherwise specified in the following table, the time for reviewing bridge removal plans shall be the same as specified for falsework working drawings in Section 51-1.06A, "Falsework Design and Drawings," of the Standard Specifications.

For bridge removal that requires the Contractor's registered engineer to prepare and sign the bridge removal plan, the Contractor's registered engineer shall be present at all times when bridge removal operations are in progress. The Contractor's registered engineer shall inspect the bridge removal operation and report in writing on a daily basis the progress of the operation and the status of the remaining structure. A copy of the daily report shall be available at the site of the work at all times. Should an unplanned event occur or the bridge operation deviate from the approved bridge removal plan, the Contractor's registered engineer shall submit immediately to the Engineer for approval, the procedure of operation proposed to correct or remedy the occurrence.

10-1.__ EARTHWORK

Earthwork shall conform to the provisions in Section 19, "Earthwork," of the Standard Specifications and these special provisions.

Surplus excavated material shall become the property of the Contractor and shall be disposed of in conformance with the provisions in Section 7-1.13, "Disposal of Material Outside the Highway Right of Way," of the Standard Specifications.

10-1.__ PRESTRESSING CONCRETE

Prestressing concrete shall conform to the provisions in Section 50, "Prestressing Concrete," of the Standard Specifications and these special provisions.

Attention is directed to Sections "Working Drawings," "Order of Work," and "Falsework," of these special provisions.

Prestressing concrete shall consist of the following items as listed in the Engineer's Estimate:

A. Prestressing Cast-In-Place Concrete, Location A:
   Prestressing cast-in-place bent caps and footing
B. Prestressing Cast-In-Place Concrete, Location B:
   Prestressing cast-in-place hinge corbels, jacking corbels and Right Columns.

CONTRACT NO. 04-012024

CONTRACT CHANGE ORDER NO 108

SHEET 189 OF 267

The prestressing sequence shall conform to the requirements shown on the plans.

The contract lump sum price paid for prestressing concrete of the types listed in Engineer's Estimate shall include full compensation for furnishing all labor, materials, tools, equipment and incidentals, and for doing all work involved in furnishing, placing and tensionsing the prestressing in cast-in-place concrete structure, complete in place, as shown on the plans, as specified in the Standard Specifications and these special provisions, and as directed by the Engineer.

Attention is directed to "Jack Bridge" of these special provisions for provisions and payment for top of Right Column jacking assembly.

After installation, all exposed prestress bar anchorages, except where galvanized, shall be cleaned by wire brushing or other hand method acceptable to the Engineer to remove dirt, loose rust or mill scale. Cleaned surfaces shall be painted with 2 applications of unthinned commercial quality zinc-rich primer. Spray cans shall not be used.

Full compensation for hand cleaning and painting the exposed surfaces of prestress bar anchorages shall be considered as included in the contract lump sum price paid for prestressing cast-in-place-concrete, Location B and no separate payment will be made therefor.

10-1.__ CONCRETE STRUCTURES

Portland cement concrete structures shall conform to the provisions in Section 51, "Concrete Structures," of the Standard Specifications and these special provisions.

When a roughened concrete surface is shown on the plans, the existing concrete surface shall be roughened to a full amplitude of approximately 6 mm by abrasive blasting, water blasting, or mechanical equipment.

Neoprene strip shall be furnished and installed in conformance with the details shown on the plans, the provisions in the Standard Specifications, and these special provisions.

Furnishing and installing neoprene strip shall conform to the requirements for strip waterstops as provided in Section 51-1.145, "Strip Waterstops," of the Standard Specifications, except that the protective board will not be required.

At least 30 days prior to beginning work on hinge corbel construction, the Contractor shall submit to the Engineer for approval a hinge corbel construction plan. The hinge corbel construction plan shall include a detailed description of the construction sequence and the estimated time required for completion of each item of work.

Fast Setting Hydraulic Cement Concrete

Fast setting hydraulic cement concrete shall be used for high early strength concrete at hinge corbels as shown on the plans and shall conform to the provisions in Section 51, "Concrete Structures," of the Standard Specifications and these special provisions.

Attention is directed to Section "Maintaining Traffic" of these special provisions regarding lane closure requirements prior to placement of hinge corbel concrete.

Fast Setting Hydraulic Cement Concrete (FSHCC) shall consist of hydraulic cement conforming to the requirements below, aggregate, and any admixtures used. The combined aggregate grading used in FSHCC shall be any of the maximum size grading limits specified in Section 90-3.04, "Combined Aggregate Gradings" of the Standard Specifications. The minimum 3 hour compressive strength shall be 14 MPa and the minimum 28 day compressive strength shall be 35 MPa.

CONTRACT NO. 64-0120R4

CONTRACT CHANGE ORDER NO 108

SHEET 190 OF 267

FSHCC shall conform to the provisions in Section 90, "Portland Cement Concrete," of the Standard Specifications, except that any cement meeting the requirements specified in ASTM Designation: C 219 and conforming to the following requirements may be used.

Test Description	Test Method	Requirement
Contraction in Air	California Test 527,W/C Ratio = 0.39 ± 0.010	0.053 %, max.
Mortar Expansion in Water	ASTM Designation: C 1038	0.04 %, max.
Soluble Chloride*	California Test 422	0.05 %, max.
Soluble Sulfates*	California Test 417	0.30 %, max.
Thermal Stability	California Test 553	90 %, min.
Compressive Strength @ 3 days	ASTM Designation: C 109	17 MPa

*Test is to be done on a cube specimen, fabricated in conformance with the requirements in ASTM Designation: C 109, cured at least 14 days and then pulverized to 100% passing the 300-µm sieve

Type C accelerating chemical admixtures conforming to the provisions in Section 90-4, "Admixtures," of the Standard Specifications may be used. In addition to the admixtures listed on the Department's current list of approved admixtures, citric acid or borax may be used if requested in writing by the cement manufacturer and a sample is submitted to the Engineer. Chemical admixtures, if used, shall be included in the testing for requirements listed in the table above.

Penetration requirements in Section 90-6.06, "Amount of Water and Penetration," of the Standard Specifications shall not apply.

The Contractor shall submit mix designs that include the following:

A. Compressive Strength. at 3 hours, 24 hours, 3 days, 7 days, 28 days and 56 days.
B. Proposed aggregate grading
C. Mix proportions of hydraulic cement, aggregate and water
D. Types and amounts of chemical admixtures, if used
E. Initial and Final set time of a 300mm x 300mm x 138mm concrete block curing at 21 + 5°C ambient temperature.
F. Range of ambient temperatures over which the mix design will achieve the required minimum 3 hour and 56 day compressive strengths.

At the Contractor's option, more than one mix design may be submitted to account for ambient temperature variations that exceed the ranges specified herein

FSHCC shall be proportioned and placed by volumetric continuous mixers capable of proportioning cement, water, aggregate and admixtures by volume. Identifying numbers or letters of volumetric continuous mixers shall be located on the front or rear of the equipment. Calibration of the volumetric continuous mixers shall be performed demonstrating that the equipment is capable of delivering the proportioned concrete material per the approved mix design. The volumetric continuous mixers shall produce a log of production data, at no less then 20 minute intervals, showing the proportions of cement, aggregate and water dispatched.

The Contractor shall furnish aggregate moisture determinations per California Test Method 223. During actual placement the percent fine aggregate moisture content to be used shall be limited to a maximum value of 2% more then moisture content determined during calibration.

The aggregate and cement proportioning calibrations shall be determined by weight.

The first 3 volumetric continuous mixers to be used during actual production at the site shall be loaded with all material at least 4 hours prior to placement. A trial mix to be disposed of by

CONTRACT NO. 04-012024

CONTRACT CHANGE ORDER NO 1058

SHEET 191 OF 267

the Contractor shall be batched for the Engineer's inspection. The mix size shall be from a minimum 20 second operation of the mixer. At 3 hours after discharge the batched material shall be visibly hard indicating at least a final set.

After the calibration and acceptance of the use of a volumetric continuous mixer, water to account for any allowable change in fine aggregate moisture content may be adjusted just prior to placement. Only the water reducer admixtures, if used, may be adjusted during actual placement.

A Certificate of Compliance in conformance with the provisions in Section 6-1.07, "Certificates of Compliance," of the Standard Specifications shall be furnished with each delivery of aggregate, cement, and admixtures used for calibration tests and shall be submitted to the Engineer with a certified copy of the mass of each delivery.

The concrete curing method shall be as recommended by the manufacturer of the cement and as approved by the Engineer.

Fast Setting Hydraulic Cement Concrete will be measured and paid for as structural concrete, bridge.

FALSEWORK

Falsework shall conform to the provisions in Section 51, "Concrete Structures," of the Standard Specifications and these special provisions.

Attention is directed to "Railroad Relations and Insurance" of these special provisions for additional requirements for falsework over railroads.

Welding and Nondestructive Testing

Welding of steel members, except for previously welded splices and except for when fillet welds are used where load demands are less than or equal to 175 N/mm for each 3 mm of fillet weld, shall conform to AWS D1.1 or other recognized welding standard. The welding standard to be utilized shall be specified by the Contractor on the working drawings. Previously welded splices for falsework members are defined as splices made prior to the member being shipped to the project site.

Splices made by field welding of steel beams at the project site shall undergo nondestructive testing (NDT). At the option of the Contractor, either ultrasonic testing (UT) or radiographic testing (RT) shall be used as the method of NDT for each field weld and any repair made to a previously welded splice in a steel beam. Testing shall be performed at locations selected by the Contractor. The length of a splice weld where NDT is to be performed, shall be a cumulative weld length equal to 25 percent of the original splice weld length. The cover pass shall be ground smooth at the locations to be tested. The acceptance criteria shall conform to the requirements of AWS D1.1, Section 6, for cyclically loaded nontubular connections subject to tensile stress. If repairs are required in a portion of the weld, additional NDT shall be performed on the repaired sections. The NDT method chosen shall be used for an entire splice evaluation including any required repairs.

For all field welded splices, the Contractor shall furnish to the Engineer a letter of certification which certifies that all welding and NDT, including visual inspection, are in conformance with the specifications and the welding standard shown on the approved working drawings. This letter of certification shall be signed by an engineer who is registered as a Civil Engineer in the State of California and shall be provided prior to placing any concrete for which the falsework is being erected to support.

For previously welded splices, the Contractor shall determine and perform all necessary testing and inspection required to certify the ability of the falsework members to sustain the

CONTRACT NO. 04-012024

CONTRACT CHANGE ORDER NO 1058

SHEET 192 OF 267

stresses required by the falsework design. This welding certification shall be in writing, shall be signed by an engineer who is registered as a Civil Engineer in the State of California, and shall be provided prior to placing any concrete for which the falsework is being erected to support.

The Contractor's engineer who signs the falsework drawings shall also certify in writing that the falsework is constructed in conformance with the approved drawings and the contract specifications prior to placing concrete. This certification shall include performing any testing necessary to verify the ability of the falsework members to sustain the stresses required by the falsework design. The engineer who signs the drawings may designate a representative to perform this certification. Where falsework contains openings for railroads, vehicular traffic, or pedestrians, the designated representative shall be qualified to perform this work, shall have at least three years of combined experience in falsework design or supervising falsework construction, and shall be registered as a Civil Engineer in the State of California. For other falsework, the designated representative shall be qualified to perform this work and shall have at least three years of combined experience in falsework design or supervising falsework construction. The Contractor shall certify the experience of the designated representative in writing and provide supporting documentation demonstrating the required experience if requested by the Engineer.

SLIDING BEARINGS

Sliding bearings consisting of elastomeric bearing pads lubricated with grease and covered with sheet metal shall conform to the following requirements:

A. Grease shall conform to the requirements of Military Specification: MIL-S-8660. A uniform film of grease shall be applied to the upper surface of the pads prior to placing the sheet metal.
B. Sheet metal shall be commercial quality galvanized sheet steel. The sheet metal shall be smooth and free of kinks, bends, or burrs.
C. Construction methods and procedures shall prevent grout or concrete seepage into the sliding bearing assembly.

ELASTOMERIC BEARING PADS

Elastomeric bearing pads shall conform to the provisions in Section 51-1.12H, "Elastomeric Bearing Pads," of the Standard Specifications and these special provisions.

10-1.__ PTFE BEARING

PTFE bearings, consisting of polytetrafluoro-ethylene (PTFE) and stainless steel bearing surfaces, structural steel plates and anchors, shall conform to the details shown on the plans, the provisions in Section 51, "Concrete Structures," of the Standard Specifications, and these special provisions.

PTFE bearings shall be the fixed type with curved bearing surfaces.

The manufacturer of the PTFE bearings shall show evidence that PTFE bearings furnished by the same manufacturer and used in conditions similar to this application have had at least 3 years of satisfactory service at each of 2 projects.

A qualified representative of the manufacturer shall be present during installation of the first bearing and shall be available for advice during any remaining installations.

The Contractor shall submit working drawings of the PTFE bearings to the Engineer for approval in conformance with the provisions in Section 5-1.02, "Plans and Working Drawings,"

CONTRACT NO. 04-0120R4

CONTRACT CHANGE ORDER NO 105

SHEET 193 OF 267

of the Standard Specifications. For initial review 4 sets of such drawings shall be submitted. After review, 6 sets shall be submitted for final approval and for use during construction.

The working drawings for PTFE bearings shall include a description of the method of mechanical interlocking of the PTFE fabric to the metallic substrate and details of temporary support for the PTFE bearing during concrete placement.

Working drawings shall be 279 mm x 432 mm or 559 mm x 864 mm in size and each drawing and calculation sheet shall include the name of the structure as shown on the contract plans, District-County-Route, bridge number, and contract number.

Working drawings shall be submitted sufficiently in advance of the start of the affected work to allow time for review by the Engineer and correction by the Contractor of the drawings without delaying the work. The time shall be proportional to the complexity of the work but in no case shall the time be less than 30 days after complete drawings and all support data are submitted.

At the completion of each structure on the contract, one set of 279 mm x 432 mm prints on 75-g/m^2 (minimum) bond paper of the corrected original tracings of all working drawings for each structure shall be furnished to the Engineer. Reduced prints of drawings that are common to more than one structure shall be submitted for each structure. An index prepared specifically for the drawings for each structure containing sheet numbers and titles shall be included on the first reduced print in the set for each structure. Reduced prints for each structure shall be arranged in the order of drawing numbers shown in the index.

The edge of the corrected original tracing image shall be clearly visible and visually parallel with the edges of the page. A clear, legible symbol shall be provided as near to the upper left side of each page as is feasible within the original print to show the amount of reduction and a horizontal and vertical scale shall be provided on each reduced print to facilitate enlargement to original scale.

PTFE bearings shall be installed on surfaces prepared in conformance with the provisions in Section 55-3.19, "Bearings and Anchorages," of the Standard Specifications.

The manufacturer shall furnish Certificates of Compliance in conformance with the provisions in Section 6-1.07, "Certificates of Compliance," of the Standard Specifications for all material used in the PTFE bearings. The certification shall be supported by a copy of the results of all proof tests performed on the bearings.

PTFE surfaces of PTFE bearings shall be unfilled PTFE fabric made from virgin PTFE oriented multifilament and other fibers. The resin in the filaments shall be virgin PTFE material (not reprocessed) in conformance with the requirements of ASTM Designation: D 4441.

At the highest point of substrate and after compression, the PTFE fabric shall have a minimum thickness of 1.6 mm and a maximum thickness of 3.2 mm.

Flat stainless steel surfaces shall be a weld overlay on structural steel plate, or solid or sheet stainless steel conforming to the requirements of ASTM Designation: A 240, Type 304 with a minimum thickness of 3.2 mm.

Curved stainless steel surfaces shall be solid stainless steel conforming to the requirements of ASTM Designation: A 240, Type 304.

Curved stainless steel surfaces with dimensions shown on the plans exceeding 101.6 mm in thickness shall be either a weld overlay on structural steel plate or solid stainless steel conforming to the requirements of ASTM Designation: A 240, Type 304. Stainless steel sheet will not be allowed.

When a weld overlay is used for stainless steel surfacing, the overlay shall be placed by submerged arc welding using Type 309L electrodes. The finished overlay shall have a 2.38 mm minimum thickness after welding, grinding, and polishing.

CONTRACT NO. 04-012024

CONTRACT CHANGE ORDER NO 108

SHEET 194 OF 267

When stainless steel sheets are used for stainless steel surfacing, the sheets shall be attached by perimeter arc welding using Type 309L electrodes. After completion of the weld operation, the stainless steel surface shall be smooth and free from waves.

Steel plates, except stainless steel, shall conform to the requirements of ASTM Designation: A 709/A 709M, Grade 250, 345 or 345W.

Stud connectors shall conform to the provisions in Section 55-2, "Materials," of the Standard Specifications.

Welding of structural steel shall conform to the requirements of AWS D1.1. Welding of structural steel to stainless steel shall conform to the requirements of AWS D1.6.

Convex plate radius dimension tolerances shall be 0.000 to -250 μm. Concave plate radius dimensions shall be +250 to 0.000 μm.

The bearing manufacturer shall have full size convex and concave metal templates for the 2 curved surfaces of each bearing radius. The templates shall be available to the inspector during all bearing inspections.

The PTFE fabric on curved or sliding bearing surfaces shall be epoxy bonded and mechanically interlocked to the steel substrate. All bonding shall be done under controlled factory conditions. The mechanical interlock on the concave surface must be integrally machined into the steel substrate. Welded retention grids will not be allowed on the concave surface. Any edges other than the selvage shall be oversown or recessed so that no cut fabric edges are exposed.

After completion of the bonding operation the PTFE surface shall be smooth and free from bubbles.

The surface of the bearing elements shall be controlled such that upon completion of the bearing assembly the PTFE to stainless steel interface shall be in full bearing.

Metal surfaces of bearings exposed to the atmosphere and in contact with the structure of the completed work, except stainless steel surfaces, shall be cleaned by wire brushing or other hand method acceptable to the Engineer to remove dirt, loose rust or mill scale. Cleaned surfaces shall be painted with 2 applications of unthinned commercial quality zinc-rich primer. Spray cans shall not be used.

PTFE bearing assemblies shall be assembled at the factory. Each assembly shall be shipped as a unit and remain intact when uncrated and installed. Bearing dismantling will only be allowed under the direction and in the presence of the Engineer.

During fabrication, the maximum temperature of bonded PTFE surfaces shall be 150°C.

Damaged bearings and bearings with scratched mating surfaces shall be returned to the factory for replacement or resurfacing.

PTFE bearing sole plates shall be temporarily supported during concrete placement. Temporary supports shall prevent the rotation or displacement of the bearing during concrete placing operations. Temporary supports shall not inhibit the functioning of the PTFE bearing after concrete is placed. Temporary supports shall not restrict the movement at bridge joints due to temperature changes and shortening from prestress forces. Materials for temporary supports within the limits for placing concrete shall conform to the requirements for form fasteners.

PTFE bearing concave surface shall be coated with grease conforming to the requirements in "Sliding Bearings" of these special provisions. .

Prior to proof testing, all bearings shall be permanently die-stamped on 2 of 4 sides with markings consisting of bearing number and contract number. Each bearing shall have a unique bearing number and match marks on plate edges to insure correct assembly at the job site.

Full sized PTFE bearings shall be proof tested and evaluated for compression in the presence of the Engineer. The proof tests shall be performed on samples randomly selected by the

CONTRACT NO. 04-0120R4

CONTRACT CHANGE ORDER NO 108

SHEET 195 OF 267

Engineer from the production bearings to be used in the work. Proof testing shall be performed by the Contractor at the manufacturer's plant or at an approved laboratory. If proof tests cannot be performed at the specified load, the Contractor shall submit to the Engineer for review and approval a testing plan listing additional physical tests. These tests shall be performed in the presence of the Engineer and shall demonstrate that the requirements for proof testing at the specified load are satisfied. The Contractor shall give the Engineer at least 7 days notice before beginning proof testing. Proof testing of PTFE bearings shall conform to the following requirements:

A. One bearing per lot of production bearings shall be proof tested. A lot is defined as 25 bearings or fraction thereof of the same type, within a load category. Bearings in 2 load categories with vertical load capacities within 800 kN of each other will be considered in one load category for testing.

B. Proof tests for compression: The bearing shall be held at the design rotation or 0.02 radians, whichever is greater, for one hour at 1.5 times the maximum vertical load shown on the plans for the bearing. The device shall be in a rotated position during the test. The rotation may be imposed on the bearing by inserting a beveled plate between the bearing and the restraining surface prior to loading.
C. The bearing surfaces shall be cleaned prior to proof testing.
D. Proof testing of bearings shall be done after conditioning specimens for 12 hours at 21°±8°C.
E. The proof tested bearings shall show no visible sign of: (1) bond failure of bearing surfaces, (2) separation or lift-off of plates from each other or from PTFE surfaces, or (3) other defects. When a proof tested bearing fails to comply with these specifications, all bearings in that lot shall be individually tested for acceptance.
F. Proof test results shall be certified correct and signed by the testing laboratory personnel who conducted the test and interpreted the test results. Proof test results shall include the bearing numbers of the bearings tested.

Quantities of PTFE bearings will be determined as units from actual count in the completed work. A PTFE bearing with more than one PTFE surface shall be considered a single PTFE bearing.

The contract unit price paid for PTFE bearing shall include full compensation for furnishing all labor, materials, tools, equipment, and incidentals, and for doing all the work involved in constructing the bearing, complete in place, including anchor bolts and sleeves, mortaring of bolts, temporary supports, proof testing, and cleaning and painting of PTFE bearings, as shown on the plans, as specified in the Standard Specifications and these special provisions, and as directed by the Engineer.

10-1.__ DRILL AND BOND DOWEL (EPOXY CARTRIDGE)

Drilling and bonding dowels with epoxy cartridges shall conform to the details shown on the plans and these special provisions.

Reinforcing steel dowels shall conform to the provisions in "Reinforcement" of these special provisions.

Threaded rods used as dowels shall conform to the provisions in Section 75-1.03, "Miscellaneous Bridge Metal," of the Standard Specifications. The threaded rods shall be installed in conformance with these requirements for dowels specified herein.

The Contractor shall select an epoxy cartridge system which has passed the testing requirements of the International Conference of Building Officials (ICBO) document - AC58 and additional test requirements as specified in the Caltrans Augmentation/Revisions to ICBO AC58. Testing shall be performed by an independent testing facility and the results will be reviewed and approved by the Transportation Laboratory. The Caltrans Augmentation/Revisions to ICBO AC58 document may be obtained by contacting the Transportation Laboratory, telephone: (916) 227-7000.

The epoxy cartridge system used shall be appropriate for the ambient concrete temperature and installation conditions at the time of installation in conformance with the manufacturer's specifications.

Epoxy cartridges shall be accompanied by a Certificate of Compliance as provided in Section 6-1.07, "Certificates of Compliance," of the Standard Specifications. The certificate shall state that the material complies in all respects to the requirements of ICBO AC58 and Caltrans Augmentation/Revisions to ICBO AC58.

Each epoxy cartridge shall be clearly and permanently marked with the manufacturer's name, model number of the epoxy cartridge system, manufacturing date, and lot number. Each carton of epoxy cartridges shall contain the manufacturer's recommended installation procedures, minimum cure time, and such warning or precautions concerning the contents as may be required by State or Federal Laws and Regulations.

The holes shall be drilled by methods that will not shatter or damage the concrete adjacent to the holes. If reinforcement is encountered during drilling, before the specified depth is attained, the Engineer shall be notified. Unless the Engineer approves, in writing, coring through the reinforcement, the hole will be rejected and a new hole, in which reinforcement is not encountered, shall be drilled adjacent to the rejected hole to the depth recommended by the manufacturer.

The drilled holes shall be cleaned in conformance with the manufacturer's instructions and shall be dry at the time of placing the epoxy cartridge bonding material and the steel dowels. The bonding material shall be a 2-component epoxy system contained in a cartridge having 2 separate chambers and shall be inserted into the hole using a dispensing gun and replaceable mixing nozzle approved by the manufacturer. Unless otherwise specified, the depth of hole and the installation procedure shall be as recommended by the manufacturer. A copy of the manufacturer's recommended installation procedure shall be provided to the Engineer at least 2 days prior to the start of work.

Immediately after inserting the dowels into the epoxy, the dowels shall be supported as necessary to prevent movement during curing and shall remain undisturbed until the epoxy has cured a minimum time as specified by the manufacturer. Dowels that are improperly bonded, as determined by the Engineer, will be rejected. Adjacent new holes shall be drilled, and new dowels shall be placed and securely bonded to the concrete. All work necessary to correct improperly bonded dowels shall be performed at the Contractor's expense.

Unless otherwise provided, drilling and bonding dowels with epoxy cartridges will be measured and paid for by the unit as drill and bond dowel (epoxy cartridge). The number of units to be paid for will be determined from actual count of the completed units in place.

The contract unit price paid for drill and bond dowel (epoxy cartridge) shall include full compensation for furnishing all labor, materials (except dowels), tools, equipment, and incidentals, and for doing all the work involved in drilling the holes and bonding dowels with epoxy cartridges, including coring through reinforcement when approved by the Engineer, complete in place, as shown on the plans, as specified in the Standard Specifications and these special provisions, and as directed by the Engineer.

10-1. CORE CONCRETE

Coring concrete shall consist of coring holes through reinforced concrete bridge members as shown on the plans and in conformance with these special provisions.

For cored holes greater than 3000 mm in length, the following shall apply:

A. Prior to coring, the Contractor shall submit, in conformance with the provisions in Section 5-1.02, "Plans and Working Drawings," of the Standard Specifications, the methods and equipment to be used in the coring operations.
B. The deviation in alignment of cored holes from that shown on the plans shall not be more than 13 mm per 3000 mm of cored hole length with a maximum deviation of not more than 75 mm.

The holes shall be cored by methods that will not shatter or damage the concrete adjacent to the holes.

Water for core drilling operations shall be from the local domestic water supply or shall not contain more than 1000 parts per million of chlorides as Cl, nor more than 1300 parts per million of sulfates as SO_4, nor shall the water contain any impurities in a sufficient amount to cause discoloration of the concrete or produce etching of the surface.

Water from core drilling operations shall not be permitted to fall on public traffic, to flow across shoulders or lanes occupied by public traffic, or to flow into gutters or other drainage facilities.

Coring concrete will be measured by the meter as core concrete of the sizes listed in the Engineer's Estimate. The cored concrete will be measured along the centerline of the hole without deduction for expansion joints.

The contract price paid per meter for core concrete of the sizes listed in the Engineer's Estimate shall include full compensation for furnishing all labor, materials, tools, equipment, and incidentals, and for doing all the work involved in coring the holes, including control of water from core drilling, as shown on the plans, as specified in these special provisions, and as directed by the Engineer.

10-1. HIGH STRENGTH GROUT

High strength grout shall conform to the requirements of either ASTM Designation: C 1107, Grade B, or ASTM Designation: C 845, Type K, and shall provide a minimum compressive strength of 34.5 MPa at 28 days when tested by California Test 551. The grout shall be mixed in accordance with the manufacturer's recommendations. Water shall conform to the provisions for water for prestressed concrete work in Section 90-2.03, "Water," of the Standard Specifications.

Admixtures shall not contain more than 500 parts per million of chlorides as Cl, when tested by California Test 422, and shall not contain more than 2500 parts per million of sulfates as SO_4, when tested by California Test 417.

The Contractor shall ensure that the area to be grouted is completely filled with grout without voids.

Full compensation for grouting pipes as shown on the plans shall be considered as included in the contract price paid per cubic meter for structural concrete, bridge and no separate payment will be made therefore.

CONTRACT NO. 04-0120R4

CONTRACT CHANGE ORDER NO 108

SHEET 196 OF 267

10-1.__ SEALING JOINTS

Joints in concrete bridge decks and joints between concrete structures and concrete approach slabs shall be sealed in conformance with the details shown on the plans, the provisions in Section 51, "Concrete Structures," of the Standard Specifications, and these special provisions.

Where polyurethane seals are shown on the plans, a silicone sealant conforming to the provisions in Section 51–1.12F, "Sealed Joints," of the Standard Specifications may be used.

When ordered by the Engineer, a joint seal larger than called for by the Movement Rating shown on the plans shall be furnished and installed. Payment to the Contractor for furnishing the larger seal and for saw cutting the increment of additional depth of groove required will be determined as provided in Section 4-1.03, "Changes," of the Standard Specifications.

10-1.__ REINFORCEMENT

Reinforcement shall conform to the provisions in Section 52, "Reinforcement," of the Standard Specifications and these special provisions.

The Department's mechanical splices prequalified list can be found at the following internet site:

http://www.dot.ca.gov/hq/esc/approved_products_list/

The provisions of "Welding Quality Control" of these special provisions shall not apply to resistance butt welding.

EPOXY-COATED PREFABRICATED REINFORCEMENT

Bar reinforcement to be epoxy-coated shall conform to the ASTM Designation and grade required or permitted by Section 52-1.02A, "Bar Reinforcement," of the Standard Specifications, for the location or type of structure involved. The coated bar reinforcement shall conform to the requirements in ASTM Designation: A 934/A 934M except as provided herein.

Wire reinforcement to be epoxy-coated shall conform to the ASTM Designation and grade required or permitted by Section 52-1.02D, "Reinforcing Wire," of the Standard Specifications for the location or type of structure involved. The coated wire reinforcement shall conform to the requirements for Class A, Type 2 coating of ASTM Designation: A 884/A 884M except as provided herein.

Appendices X1 and X2, "Guidelines For Job-Site Practices," of ASTM Designation: A 884/A 884M and A 934/A 934M, respectively, shall apply except as provided herein. The term "shall" shall replace the term "should" in these appendices. Section X1.2 of Appendix X1 and Section X2.2 of Appendix X2 shall not apply.

All coatings shall be purple or gray in color.

Except for field welding of butt splices, all welding of reinforcement shall be complete before epoxy coating the reinforcement.

Prior to epoxy coating, all resistance butt welds shall have the weld flash removed to produce a smooth profile free of any sharp edges that would prevent proper coating of the bar. The flash shall be removed such that the ultimate tensile strength and elongation properties of the bar are not reduced, and the outside radius of the flash, at any point along the circumference of the bar, is 1) not less than the nominal radius of the bar, nor 2) greater than 5 mm beyond the nominal radius of the bar.

A proposed weld flash removal process shall be submitted to and approved by the Engineer in writing prior to performing any removal work. The submittal shall demonstrate that the

CONTRACT NO. 04-0K2024

CONTRACT CHANGE ORDER NO 1086

SHEET 199 OF 267

proposed flash removal process produces a smooth profile that can be successfully epoxy-coated in conformance with the requirements specified herein.

Bending of epoxy-coated reinforcement after the coating has been applied will not be allowed.

When any portion of a reinforcing bar or wire requires epoxy coating, the entire bar or wire shall be coated, except, when the bar or wire is spliced outside of the limits of epoxy coating shown on the plans, epoxy coating will not be required on the portion of bar or wire beyond the splice.

Within areas where epoxy-coated reinforcement is required, tie wire and bar chairs or other metallic devices used to secure or support the reinforcement shall be plastic-coated or epoxy-coated to prevent corrosion of the devices or damage to the coated reinforcement.

Prior to coating, the Contractor shall furnish to the Transportation Laboratory a representative 110 g sample from each batch of epoxy coating material to be used. Each sample shall be packaged in an airtight container identified with the manufacturer's name and batch number.

Two 700-mm long samples of coated bar or wire reinforcement from each size and from each load shipped to the jobsite shall be furnished to the Engineer for testing. These samples shall be representative of the material furnished. These samples, as well as any additional random samples taken by the Engineer, may be tested for specification compliance. Additional sampling, and all tests performed by the Engineer, may be performed at any location deemed appropriate by the Engineer. Failure of any sample to meet the requirements of the specifications will be cause for rejection.

If any bar tested for coating thickness or for adhesion of coating fails to meet the requirements for coated bars in Section 9 of ASTM Designation: A 934/A 934M, 2 retests on random samples taken from bars represented by the failed test will be conducted for each failed test. If the results of both retests meet the specified requirements, the coated bars represented by the samples may be certified as meeting the test requirements.

If any wire reinforcement tested for coating thickness or for flexibility fails to meet the requirements for coated wire in Section 8 of ASTM Designation: A 884/A 884M, 2 retests on random samples taken from wire represented by the failed test will be conducted for each failed test. If the results of both retests meet the specified requirements, the coated wire represented by the samples may be certified as meeting the test requirements.

Epoxy-coated reinforcement shall be covered with an opaque polyethylene sheeting or other suitable protective material to protect the reinforcement from exposure to sunlight, salt spray, and weather. For stacked bundles, the protective covering shall be draped around the perimeter of the stack. The covering shall be adequately secured; however, it should allow for air circulation around the reinforcement to prevent condensation under the covering. Epoxy-coated reinforcement shall not be stored within 300 m of ocean or tidal water for more than 2 months.

All visible damage to coatings caused by shipping, handling, or installation shall be repaired as required for repairing coating damaged prior to shipment conforming to the requirements in ASTM Designation: A 934/A 934M for bar reinforcement or ASTM Designation: A 884/A 884M for wire reinforcement. When the extent of coating damage prior to repair exceeds 2 percent of the bar or wire surface area in any 300-mm length, repair of the bar or wire will not be allowed, and the coated bar or wire will be rejected.

The patching material and process shall be suitable for field application. The patching material shall be prequalified as required for the coating material and shall be either identified on the container as a material compatible with the reinforcement coating, or shall be accompanied by a Certificate of Compliance certifying that the material is compatible with the reinforcement

CONTRACT NO. 04-012024

CONTRACT CHANGE ORDER NO 108

SHEET 200 OF 267

coating. Damaged areas shall be patched in conformance with the patching material manufacturer's recommendations.

With the exception of lap splices, all epoxy-coated reinforcement splices shall be coated with a corrosion protection covering included on the Department's list of approved products available from the Transportation Laboratory. The covering shall be installed in conformance with the manufacturer's recommendations and as directed by the Engineer.

A Certificate of Compliance conforming to the provisions in Section 6-1.07, "Certificates of Compliance," of the Standard Specifications, shall be furnished for each shipment of epoxy-coated bar or wire reinforcement certifying that the coated bars or wire conform to the requirements in ASTM Designation: A 934/A 934M for bars or A 884/A 884M for wire and Section 52-1.02B, "Epoxy-coated Reinforcement," of the Standard Specifications. This Certificate of Compliance shall include all the certifications specified in ASTM Designation: A 934/A 934M for bars or ASTM Designation: A 884/A 884M for wire. All qualification testing and certification shall be by an independent laboratory. The Department maintains a list of prequalified epoxy coatings. The prequalified list can be obtained by contacting the Transportation Laboratory and is available at:

http://www.dot.ca.gov/hq/esc/approved_products_list/

Any portion of bar or wire reinforcement extending beyond the limits for epoxy-coated reinforcement shown on the plans will be measured and paid for as bar reinforcing steel (bridge).

10-1.__ MISCELLANEOUS METAL (BRIDGE)

Miscellaneous metal (bridge) shall conform to the provisions for miscellaneous bridge metal in Section 75, "Miscellaneous Metal," of the Standard Specifications and these special provisions.

Attention is directed to "Welding" of these special provisions.

Miscellaneous metal (bridge) shall consist of the miscellaneous bridge metal items listed in Section 75-1.03, "Miscellaneous Bridge Metal," of the Standard Specifications, and the following:

A. xx-strong pipe and x-strong pipe with studs

Full compensation for filling x-strong pipes with high strength grout or concrete as shown on the plans shall be considered as included in the contract price paid per cubic meter for structural concrete, bridge and no separate payment will be allowed therefor.

Full compensation for coating x-strong pipes with grease and wrapping with building paper as shown on the plans shall be considered as included in the contract price paid per kilogram for miscellaneous metal, bridge and no separate payment will be allowed therefor.

10-1.__ MISCELLANEOUS METAL (RESTRAINER-BAR TYPE)

Miscellaneous metal (restrainer-bar type) units, consisting of high strength bars, bearing plates, couplers, anchorage devices, and incidentals, shall conform to the details shown on the plans, the provisions in Section 75-1.035, "Bridge Joint Restrainer Units," of the Standard Specifications, and these special provisions.

Bar assemblies shall conform to the materials and sampling provisions for prestressing steel in Section 50, "Prestressing Concrete," of the Standard Specifications and the following:

CONTRACT NO. 04-012024

CONTRACT CHANGE ORDER NO 105

SHEET 201 OF 267

A. The high strength bars shall conform to the requirements of ASTM Designation: A 722, including all supplementary requirements.
B. All exposed new metal surfaces of bar type restrainer units shall be cleaned by wire brushing or other hand method acceptable to the Engineer to remove dirt, loose rust or mill scale. Cleaned surfaces shall be painted with 2 applications of unthinned commercial quality zinc-rich primer. Spray cans shall not be used.
C. Anchorage devices and couplers, conforming to the requirements specified herein, shall be of a type selected by the Contractor and shall include locking devices to prevent turning or loosening.
D. The anchorage device and coupler shall develop the specified minimum ultimate tensile strength of the steel bar.
E. The Contractor shall be responsible for determining the required lengths of the bar assemblies.
F. The bar assemblies shall be shipped as a complete unit including anchorage device and coupler.

Bearing plates shall conform to the requirements of ASTM Designation: A 36/A 36M.

New concrete adjacent to restrainers shall be placed prior to installing restrainers.

Elastomeric pads shall be bonded to bearing plates with adhesive conforming to the requirements in Federal Specification MMM-A-121.

Miscellaneous metal (restrainer-bar type) will be measured and paid for by the kilogram in the same manner specified for miscellaneous metal (restrainer) in Sections 75-1.06, "Measurement," and 75-1.07, "Payment," of the Standard Specifications.

Full compensation for cleaning and painting of bar type restrainer units shall be considered as included in the contract price paid per kilogram for miscellaneous metal (restrainer-bar type) and no additional compensation will be allowed therefor.

10-1.__ BRIDGE DECK DRAINAGE SYSTEM

This work shall consist of furnishing and installing bridge deck drainage system as shown on the plans, in conformance to the provisions in Section 75, "Miscellaneous Metal," of the Standard Specifications and these special provisions.

Attention is directed to "Welding" of these special provisions.

Self-tapping screws used for sleeve connections shall be hex-head stainless steel, installed in holes drilled to fit the self-tapping screws, conforming to the requirements of ASTM Designation: A 276, Type 316.

At the Contractor's option, fiberglass pipes and fittings with the same diameter and minimum bend radius as those shown on the plans, may be substituted for welded steel pipe in deck drain systems.

Fiberglass pipe and fittings shall conform to the requirements in ASTM Designation: D 2996, and shall have a minimum short-term rupture strength of 207 MPa. The adhesive type recommended by the manufacturer shall be used for joining pipe and fittings. Fiberglass pipe not enclosed in a box girder cell or encased in concrete shall be manufactured from ultraviolet-resistant resin pigmented with concrete-gray color, or be coated with a concrete-gray resin-rich exterior coating. Paint shall not be used. Fiberglass pipe treated with ultraviolet protection shall withstand a minimum of 2500 hours of accelerated weathering when tested in conformance with the requirements in ASTM Designation: G 154. Lamps shall be UV-B (313 nm wavelength). The resting cycle shall be 4 hours of ultraviolet (UV) exposure at 60°C, and then 4 hour of

CONTRACT NO. 04-0K2-0R4

CONTRACT CHANGE ORDER NO 105

SHEET 202 OF 267

condensate exposure at 50°C. After testing, the surface of the pipe shall exhibit no fiber exposure, crazing, or checking, and only a slight chalking or color change.

Support spacing for fiberglass pipe shall be the same as shown on the plans for welded steel pipe. Pipe supports shall have a width of not less than 38 mm.

A Certificate of Compliance for fiberglass pipe and fittings shall be furnished to the Engineer in conformance with the provisions in Section 6-1.07, "Certificates of Compliance," of the Standard Specifications. The Certificate of Compliance shall include all laboratory test results conforming to the provisions specified herein.

Couplings used to connect fiberglass pipe to steel shall be threaded or flanged. The sleeve connections shown on the plans shall not be used for fiberglass pipe.

If fiberglass pipe is substituted for welded steel pipe, the quantity of drainage piping will be computed on the basis of the dimensions and details shown on the plans, and no change in the quantities to be paid for will be made because of the use of fiberglass pipe.

Cast-in-place inserts shall be the ferrule loop type.

Metal parts of concrete anchorage devices shall be fabricated from stainless steel conforming to the requirements of ASTM Designation: A 276, Type 316.

MEASUREMENT AND PAYMENT

Bridge deck drainage system will be measured and paid for as lump sum.

The contract lump sum price paid for bridge deck drainage system shall include full compensation for furnishing all labor, materials, tools, equipment and incidentals, and for doing all the work involved in furnishing and installing bridge deck drainage system, complete in place, as shown on the plans, as specified in the Standard Specifications and these special provisions, and as directed by the Engineer.

10-1.__ CONCRETE BARRIER

Concrete barriers shall conform to the provisions in Section 83-2, "Barriers," of the Standard Specifications and these special provisions.

Bar reinforcing steel for use in concrete barriers shall conform to the provisions in "Epoxy-Coated Prefabricated Reinforcement," of these special provisions.

Full compensation for epoxy-coated bar reinforcement shall be considered as included in the contract price paid per meter for concrete barrier of the type or types listed in the Engineer's Estimate and no separate payment will be made therefor.

CONTRACT NO. 04-0120 R4

CONTRACT CHANGE ORDER NO 108

SHEET 203 OF 267

STATE OF CALIFORNIA - DEPARTMENT OF TRANSPORTATION

CONTRACT CHANGE ORDER

Change Requested by: Engineer

CCO 109	Suppl. No. 0	Contract No. 04 - 0120R4	Road SF-80-12.6/13.2	FED. AID LOC.: ACBRIM-080-1(097)N

To: CC MYERS INC

You are directed to make the following changes from the plans and specifications or do the following described work not included in the plans and specifications for this contract. ***NOTE: This change order is not effective until approved by the Engineer.***

Description of work to be done, estimate of quantities and prices to be paid. (Segregate between additional work at contract price, agreed price and force account.) Unless otherwise stated, rates for rental of equipment cover only such time as equipment is actually used and no allowance will be made for idle time. This last percentage shown is the net accumulated increase or decrease from the original quantity in the Engineer's Estimate.

Extra Work at Force Account:

As authorized by the Engineer, provide the following advanced planning services for the Department's mechanical, electrical, and piping design work of the East Tie-In (ETI) and West Tie-In (WTI):

1) Meet, coordinate, and provide constructability input to the Department as required to assist with interfacing the mechanical, electrical, and piping design work of the WTI and ETI with the Viaduct.

2) Prepare and submit necessary submittals in advance of the final design being issued in order to expedite the work.

Estimated cost of Extra Work at Force Account $100,000.00

Estimated Cost: Increase ☑ Decrease ☐ **$100,000.00**

By reason of this order the time of completion will be adjusted as follows: 0 days

Submitted by

Signature	Resident Engineer	Date
	BILL CASEY	12-5-07

Approval Recommended by

Signature	Area Construction Manager	Date
	DENNIS TURCHON	12/6/07

Engineer Approval by

Signature	Area Construction Manager	Date
	DENNIS TURCHON	1/4/08

We the undersigned contractor, have given careful consideration to the change proposed and agree, if this proposal is approved, that we will provide all equipment, furnish the materials, except as may otherwise be noted above, and perform all services necessary for the work above specified, and will accept as full payment therefor the prices shown above.

NOTE: If you, the contractor, do not sign acceptance of this order, your attention is directed to the requirements of the specifications as to proceeding with the ordered work and filing a written protest within the time therein specified.

Contractor Acceptance by

Signature	(Print name and title)	Date
	DANIEL E. Hanick, PRESIDENT	12/19/07

STATE OF CALIFORNIA - DEPARTMENT OF TRANSPORTATION

CONTRACT CHANGE ORDER MEMORANDUM

RECEIVED
DATE: 11/28/2007 Page 1 of 1

TO: MIKE FORNER / DENNIS TURCHON

FROM: BILL CASEY

FILE: E.A. 04 - 0120R4
CO-RTE-PM SF-80-12.6/13.2
FED. NO. ACBRIM-080-1(097)N

2007140 MAR -4 08

CCO#: 109 | SUPPLEMENT#: 0 | Category Code: CBSA

CONTINGENCY BALANCE (incl. this change) $131,328,699.41

COST: $100,000.00 INCREASE ☑ DECREASE ☐

HEADQUARTERS APPROVAL REQUIRED? ☐ YES ☑ NO

SUPPLEMENTAL FUNDS PROVIDED: $0.00

IS THIS REQUEST IN ACCORDANCE WITH ENVIRONMENTAL DOCUMENTS? ☑ YES ☐ NO

CCO DESCRIPTION:
MEP Coordination

PROJECT DESCRIPTION:
CONSTRUCT ROUTE 80 TEMP BYPASS STRUCTURE

Original Contract Time:	Time Adj. This Change:	Previously Approved CCO Time Adjustments:	Percentage Time Adjusted: (including this change)	Total # of Unreconciled Deferred Time CCO(s): (including this change)
475 Day(s)	0 Day(s)	1195 Day(s)	252 %	7

THIS CHANGE ORDER PROVIDES FOR:

Compensating the Contractor for planning and preparation work in providing assistance with interfacing the mechanical, electrical, and piping design work of the West Tie-In and East Tie-In with the Viaduct. This work includes, but is not limited to, meeting to coordinate work between the contractor and the designer, reviewing design plans to give input on construction details and procedures, and prepare the necessary submittals in advance to expedite construction.

This Contract originally required that a Temporary Bypass Structure (TBS) be designed and constructed to facilitate the completion of the San Francisco-Oakland Bay Bridge corridor projects by the winter of 2006. The primary goal of the corridor projects is to achieve seismic safety as soon as possible. Due to extensions in the corridor schedule, the TBS will not be required to be in service until 2009. As part of this extension the Department issued CCO 52 which directed the Contractor to cease work on the East and West Tie-Ins and informed the Contractor that the Department will be taking over responsibility of providing plans and specifications for the construction of the Tie-In structures. The designs are currently in process. To mitigate potential delays in completing the work, the Contractor is being compensated to coordinate with the Department's design team to advance the work. This course of action follows the recommendations found in the approved memorandum titled, "San Francisco-Oakland Bay Bridge Corridor Schedule Mitigation - Strategy for South-South Detour Completion," dated December 14, 2006 and is attached to this Change Order.

For this work, the Contractor will be compensated at Extra Work at Force Account for an estimated cost of $100,000.00, which can be financed from existing contingency funds.

Maintenance concurrence is not required, as this work involves the planning stage only.

Approval of this change order is recommended by the Resident Engineer.

CONCURRED BY:		
Construction Engineer:	Raoul Maltez, Senior TE	Date
Bridge Engineer:		Date
Project Engineer:	Hong Wong, PE	Date 12/4/07
Project Manager:	Alec Melkonians	Date 12/5/07
FHWA Rep.:		Date
Environmental:		Date
Other (specify):		Date
Other (specify):		Date
District Prior Approval By:		Date
HQ (Issue Approve) By:		Date
Resident Engineer's Signature:		Date 12-5-07

ESTIMATE OF COST

	THIS REQUEST	TOTAL TO DATE
ITEMS	$0.00	$0.00
FORCE ACCOUNT	$100,000.00	$100,000.00
AGREED PRICE	$0.00	$0.00
ADJUSTMENT	$0.00	$0.00
TOTAL	$100,000.00	$100,000.00

FEDERAL PARTICIPATION

☐ PARTICIPATING ☐ PARTICIPATING IN PART ☐ NONE
☐ NON-PARTICIPATING (MAINTENANCE) ☑ NON-PARTICIPATING

FEDERAL SEGREGATION (if more than one Funding Source or P.I.P. type)
☑ CCO FUNDED PER CONTRACT ☐ CCO FUNDED AS FOLLOWS

FEDERAL FUNDING SOURCE	PERCENT

ADA Notice: For individuals with sensory disabilities, this document is available in alternate formats. For information call: (916) 654-6410 or TDD (916) 654-3880 or write Records and Forms Management, 1120 N Street, MS-89, Sacramento, CA 95814.

CONTRACT CHANGE ORDER

Change Requested by: Engineer

CCO 110	Suppl. No. 0	Contract No. 04 - 0120R4	Road SF-80-12.6/13.2	FED. AID LOC.: ACBRIM-080-1(097)N

To: **CC MYERS INC**

You are directed to make the following changes from the plans and specifications or do the following described work not included in the plans and specifications for this contract. ***NOTE: This change order is not effective until approved by the Engineer.***

Description of work to be done, estimate of quantities and prices to be paid. (Segregate between additional work at contract price, agreed price and force account.) Unless otherwise stated, rates for rental of equipment cover only such time as equipment is actually used and no allowance will be made for idle time. This last percentage shown is the net accumulated increase or decrease from the original quantity in the Engineer's Estimate.

Extra Work at Force Account:

As authorized by the Engineer and as shown on Sheet 2 of 2 of this change order, provide geotechnical exploration support work to meet the following special requirements:

1. Construct a 4' x 10' minimum working pad for drilling, with at least 3 feet in cut. The upslope shall be stable to prevent erosion and water shall be diverted away from the cut using SWPPP BMPs.
2. Install a catchment fence at the downslope side of the pad for worker's protection.
3. Provide access to the pads for drill crew and State use.
4. Provide haul-off and disposal of drill waste in 55-gal receiving drums. At least 10 - 55 gallons will be use.
5. Restore all cut slope per contract requirements.

Estimated Cost of Extra Work at Force Account $150,000.00

Estimated Cost: **Increase** ☑ **Decrease** ☐ **$150,000.00**

By reason of this order the time of completion will be adjusted as follows: 0 days

Submitted by

Signature	Resident Engineer BILL CASEY	Date 1-29-08

Approval Recommended by

Signature	Area Construction Manager DENNIS TURCHON	Date 1/29/08

Engineer Approval by

Signature	Area Construction Manager DENNIS TURCHON	Date 2/20/08

We the undersigned contractor, have given careful consideration to the change proposed and agree, if this proposal is approved, that we will provide all equipment, furnish the materials, except as may otherwise be noted above, and perform all services necessary for the work above specified, and will accept as full payment therefor the prices shown above.

NOTE: If you, the contractor, do not sign acceptance of this order, your attention is directed to the requirements of the specifications as to proceeding with the ordered work and filing a written protest within the time therein specified.

Contractor Acceptance by

Signature	(Print name and title) DANIEL E. HAMUCK, PRESIDENT	Date 2/08/08

DIST	COUNTY	ROUTE	KILOMETER POST TOTAL PROJECT	SHEET No	TOTAL SHEETS
04	SF	80			

GEOTECHNICAL PROFESSIONAL 01/13/08

PLANS APPROVAL DATE

REGISTERED PROFESSIONAL ENGINEER — MIKE KAPUSKAR — NO. GE 2564 EXP. 12-31-08 — GEOTECHNICAL — STATE OF CALIFORNIA

The State of California or its officers or agents shall not be responsible for the accuracy or completeness of electronic copies of this plan sheet.

FUGRO-EARTH MECHANICS, J.V.
7750 Pardee Lane, Suite 120
Oakland, CA 94621

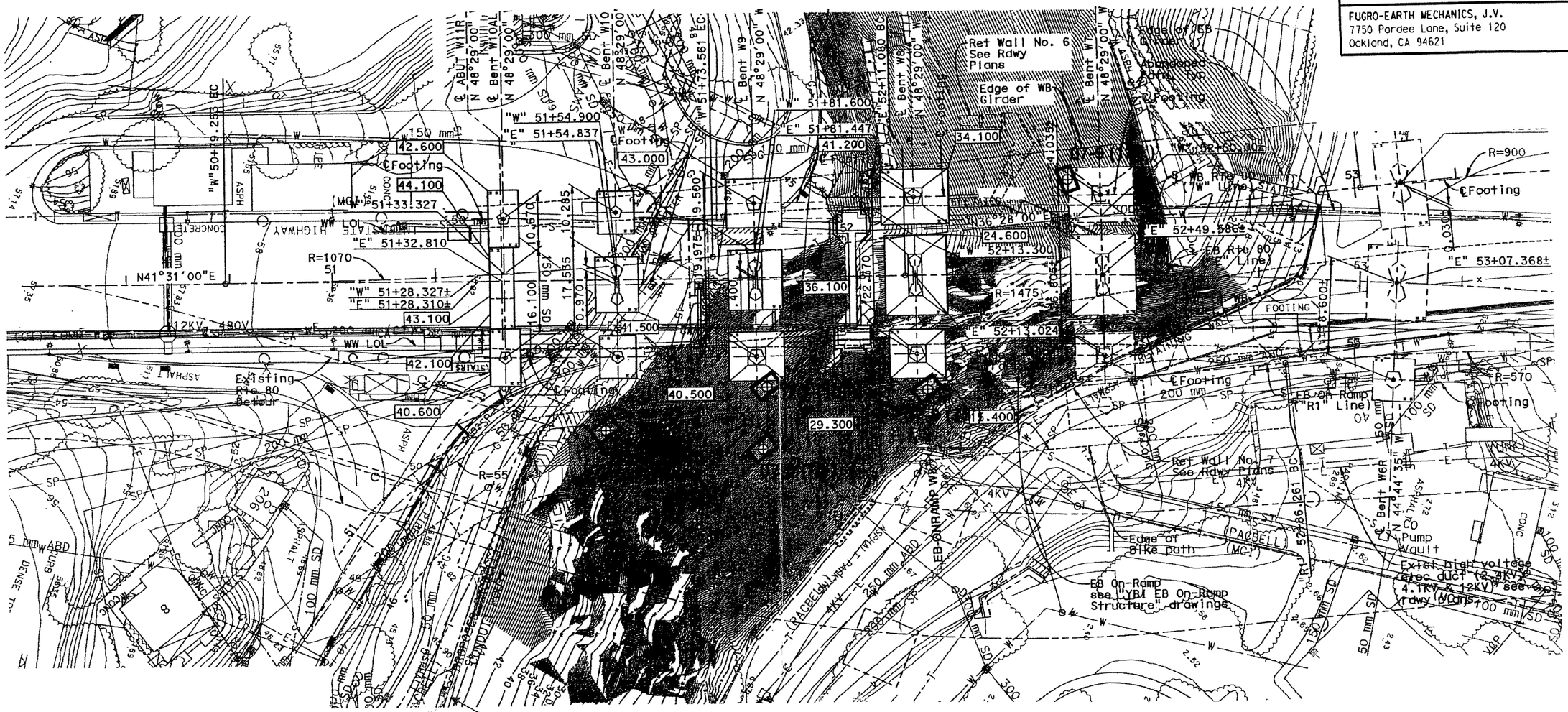

LEGEND

- Proposed Boreholes (Max. target depth)
- Workpad (min. 4.5' x10' size)
- Truck parking space (min. 10'x40') with access paths 30" wide with handrails (2H:1V to 3H:1V gradient), leading to and/or between workpads

PLAN 1:400

CONTRACT NO. 04-0120R4

CONTRACT CHANGE ORDER NO 110

SHEET 2 OF 2

DRAWN BY	M. KAPUSKAR 01/13/08	PREPARED FOR THE STATE OF CALIFORNIA DEPARTMENT OF TRANSPORTATION	M. KAPUSKAR PROJECT ENGINEER	BRIDGE NO. 34-0006	YBI GOAT SLOPE
CHECKED BY				KILOMETER POST	PROP. BOREHOLE LOCATION PLAN
ORIGINAL SCALE IN MILLIMETERS FOR REDUCED PLANS 0 10 20 30 40 50 60 70 80 90 100			CU EA	DISREGARD PRINTS BEARING EARLIER REVISION DATES →	REVISION DATES (PRELIMINARY STAGE ONLY) SHEET OF

STATE OF CALIFORNIA - DEPARTMENT OF TRANSPORTATION

CONTRACT CHANGE ORDER MEMORANDUM

RECEIVED
DATE: 1/7/2008

TO: MIKE FORNER / DENNIS TURCHON

FROM: BILL CASEY

FILE: E.A. 04 - 0120R4 007147 MAR-4 8
CO-RTE-PM SF-80-12.6/13.2
FED. NO. ACBRIM-080-1(097)N

CCO#: **110** | SUPPLEMENT#: **0** | Category Code: **CHXX**

CONTINGENCY BALANCE (incl. this change) **$120,752,774.41**

COST: **$150,000.00** INCREASE ☑ DECREASE ☐

HEADQUARTERS APPROVAL REQUIRED? ☐ YES ☑ NO

SUPPLEMENTAL FUNDS PROVIDED: **$0.00**

IS THIS REQUEST IN ACCORDANCE WITH ENVIRONMENTAL DOCUMENTS? ☑ YES ☐ NO

CCO DESCRIPTION:
Geotech Exploration Pads

PROJECT DESCRIPTION:
CONSTRUCT ROUTE 80 TEMP BYPASS STRUCTURE

Original Contract Time:	Time Adj. This Change:	Previously Approved CCO Time Adjustments:	Percentage Time Adjusted: (including this change)	Total # of Unreconciled Deferred Time CCO(s): (including this change)
475 Day(s)	**0** Day(s)	**1195** Day(s)	**252** %	**7**

THIS CHANGE ORDER PROVIDES FOR:

Providing Geotechnical Exploration support work in the area of the steep "goat" slopes adjacent to USCG premises south of the existing bridge.

This change was requested by Mike Whiteside, YBI Coordination Engineer, per his memo dated December 7, 2007. This change is necessary to verify actual soils and rock conditions and strengths used for the advanced Yerba Buena Island Transition Structure currently being designed.

The scope of work includes constructing a 4' x 10' minimum working pad for drilling, installing a catchment fence at the downslope side of the pad for worker's protection, providing access to the pads for drill crew and State use, providing haul-off and disposal of drill waste, and finally restoring all cut slopes.

The Contractor shall be compensated by Extra Work at Force Account at an estimated cost of $ 150,000.00, which will be financed by the contract's contingency funds. A cost analysis is in the record and in the project files.

There will be no time adjustment by reason of this change since the work involved did not affect the controlling operation.

Maintenance concurrence is not required as the work doesn't affect any permanent roadway features.

This change was cocurred by Alec Melkonians - Asst. Project Manager and Hong Wong - Project Engineer.

CONCURRED BY:		
Construction Engineer:		Date
Bridge Engineer:		Date
Project Engineer:	Hong Wong, PE	Date 1/24/08
Project Manager:	Alec Melkonians	Date 1/24/08
FHWA Rep.:		Date
Environmental:		Date
Other (specify):	Saba Mohan, Geotechnical Design	Date 10/30/07
Other (specify):	Mike Whiteside, Toll Bridge Design	Date 12/7/07
District Prior Approval By:		Date
HQ (Issue Approve) By:		Date
Resident Engineer's Signature:		Date

1-29-08

ESTIMATE OF COST

	THIS REQUEST	TOTAL TO DATE
ITEMS	$0.00	$0.00
FORCE ACCOUNT	$150,000.00	$150,000.00
AGREED PRICE	$0.00	$0.00
ADJUSTMENT	$0.00	$0.00
TOTAL	$150,000.00	$150,000.00

FEDERAL PARTICIPATION

☐ PARTICIPATING ☐ PARTICIPATING IN PART ☐ NONE
☐ NON-PARTICIPATING (MAINTENANCE) ☑ NON-PARTICIPATING

FEDERAL SEGREGATION (if more than one Funding Source or P.I.P. type)
☑ CCO FUNDED PER CONTRACT ☐ CCO FUNDED AS FOLLOWS

FEDERAL FUNDING SOURCE	PERCENT

ADA Notice: For individuals with sensory disabilities, this document is available in alternate formats. For information call: (916) 654-6410 or TDD (916) 654-3880 or write Records and Forms Management, 1120 N Street, MS-89, Sacramento, CA 95814.

CONTRACT CHANGE ORDER

Change Requested by: Engineer

CCO 111	Suppl. No. 0	Contract No. 04 - 0120R4	Road SF-80-12.6/13.2	FED. AID LOC.: ACBRIM-080-1(097)N

To: **CC MYERS INC**

You are directed to make the following changes from the plans and specifications or do the following described work not included in the plans and specifications for this contract. ***NOTE: This change order is not effective until approved by the Engineer.***

Description of work to be done, estimate of quantities and prices to be paid. (Segregate between additional work at contract price, agreed price and force account.) Unless otherwise stated, rates for rental of equipment cover only such time as equipment is actually used and no allowance will be made for idle time. This last percentage shown is the net accumulated increase or decrease from the original quantity in the Engineer's Estimate.

Extra Work at Force Account:

As authorized by the Engineer and as shown on Sheet 2 of 3 of this change, design and install a canopy within the United States Coast Guard's parking lot.

A Contractor-Designed canopy with specifications shall be submitted to the State for review and approval prior to construction. Any deviation or changes on the design shall be submitted in writing to the State for approval prior to implementation.

Estimated cost of Extra Work at Force Account $80,000.00

Extra Work at Lump Sum:

As authorized by the Engineer and as shown on Sheet 3 of 3 of this change, construct a parking lot within the United States Coast Guard's area.

For this work, the Contractor agrees to accept a lump sum price of $ 83,223.00. This sum constitutes full and complete compensation including all markups and incidental work for the work of this change. .

Total cost of Extra Work at Lump Sum $83,223.00

Estimated Cost: **Increase** ☑ **Decrease** ☐ **$163,223.00**

By reason of this order the time of completion will be adjusted as follows: 0 days

Submitted by

Signature	Resident Engineer	Date
	BILL CASEY	3-3-08

Approval Recommended by

Signature	Area Construction Manager	Date
	DENNIS TURCHON	3/7/08

Engineer Approval by

Signature	Area Construction Manager	Date
	DENNIS TURCHON	

We the undersigned contractor, have given careful consideration to the change proposed and agree, if this proposal is approved, that we will provide all equipment, furnish the materials, except as may otherwise be noted above, and perform all services necessary for the work above specified, and will accept as full payment therefor the prices shown above.

NOTE: If you, the contractor, do not sign acceptance of this order, your attention is directed to the requirements of the specifications as to proceeding with the ordered work and filing a written protest within the time therein specified.

Contractor Acceptance by

Signature	(Print name and title)	Date
	DANIEL E. HAMICK, PRESIDENT	3/13/08

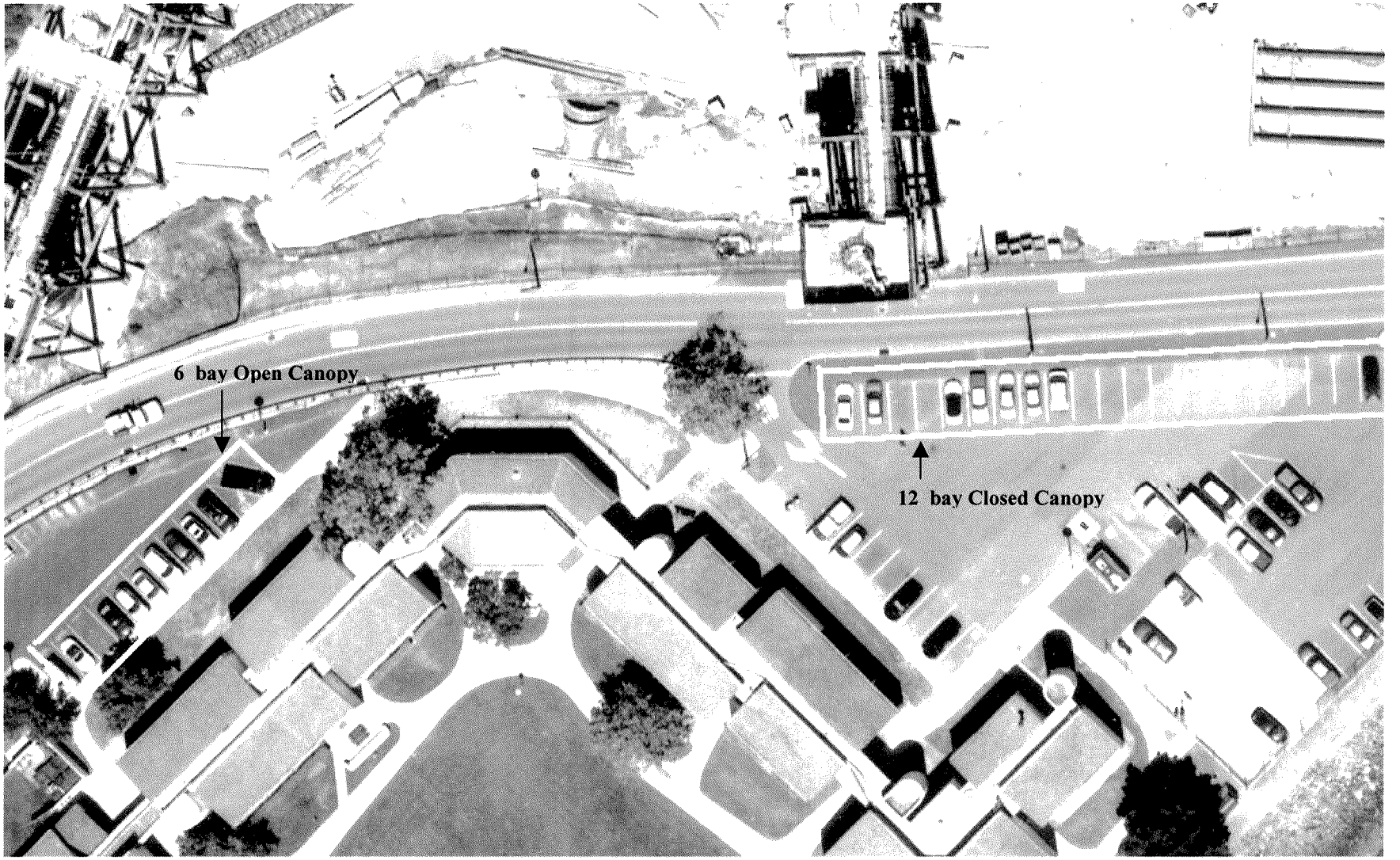
6 bay Open Canopy
12 bay Closed Canopy

CONTRACT NO. 04-0120R4

CONTRACT CHANGE ORDER NO 111

SHEET 3 OF 3

STATE OF CALIFORNIA - DEPARTMENT OF TRANSPORTATION

Caltrans

TOLL BRIDGE

PROJECT ENGINEER

CALCULATED/ DESIGNED BY | DATE | REVISED BY

CHECKED BY | DATE REVISED

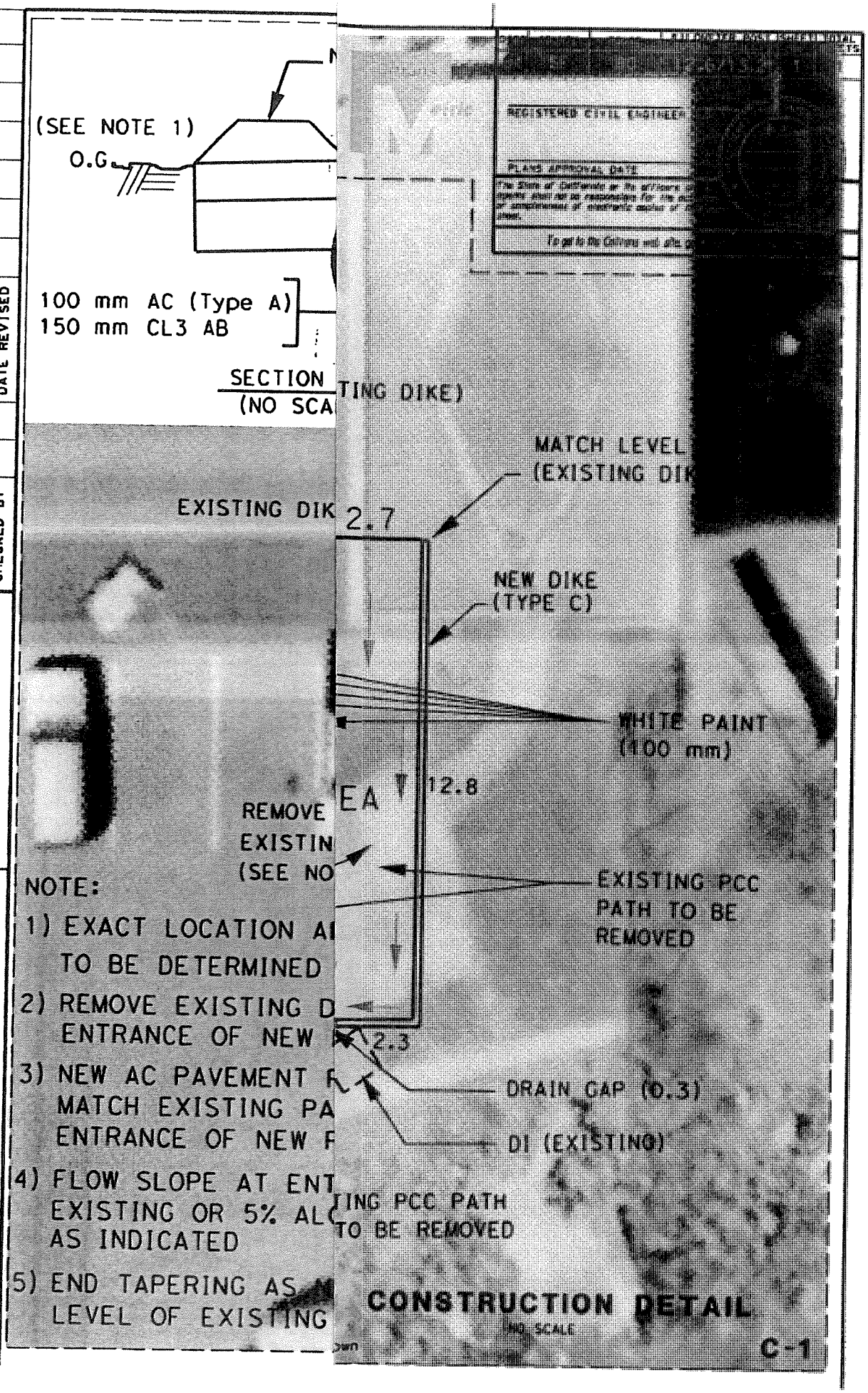

STATE OF CALIFORNIA - DEPARTMENT OF TRANSPORTATION

CONTRACT CHANGE ORDER MEMORANDUM

DATE: 2/14/2008 Page 1 of 1

TO: MIKE FORNER / DENNIS TURCHON

FROM: BILL CASEY

FILE: **E.A.** 04 - 0120R4
CO-RTE-PM SF-80-12.6/13.2
FED. NO. ACBRIM-080-1(097)N

CCO#: **111** SUPPLEMENT#: **0** Category Code: **AEZZ**

CONTINGENCY BALANCE (incl. this change) **$74,378,284.82**

COST: **$163,223.00** INCREASE ☑ DECREASE ☐

HEADQUARTERS APPROVAL REQUIRED? ☐ YES ☑ NO

SUPPLEMENTAL FUNDS PROVIDED: **$0.00**

IS THIS REQUEST IN ACCORDANCE WITH ENVIRONMENTAL DOCUMENTS? ☑ YES ☐ NO

CCO DESCRIPTION:
USCG Parking & Canopy

PROJECT DESCRIPTION:
CONSTRUCT ROUTE 80 TEMP BYPASS STRUCTURE

Original Contract Time:	Time Adj. This Change:	Previously Approved CCO Time Adjustments:	Percentage Time Adjusted: (including this change)	Total # of Unreconciled Deferred Time CCO(s): (including this change)
475 Day(s)	**0** Day(s)	**1195** Day(s)	**252** %	**7**

THIS CHANGE ORDER PROVIDES FOR:

Designing and installing a canopy and constructing a parking lot within the United States Coast Guard's (USCG) area.

The canopy change order work is necessary to protect USCG vehicles parked inside of the construction zone from potential falling debris and to mitigate disruptions to the USCG as a result of construction activities at the Viaduct structure. Addtionally, the parking lot change order is necessary to replace parking spaces taken during construction of Bent 48.

The scope of work includes clearing the area, placing aggregate base course, hot mix asphalt paving, striping, and installing a contractor-designed canopy.

The Contractor shall be compensated by two payment methods as follows: (1) Extra Work at Lump Sum price of $ 83,223.00 to pay for the USCG parking lot construction, and (2) Extra Work at Force Account for an estimated cost of $ 80,000.00 to pay for the installation of a Contractor-Designed canopy. The total cost of $ 163,223.00 can be financed by the contract's contingency funds. A cost analysis is in the record and in the project files.

There will be no time adjustment due to this CCO work since it does not affect the controlling operation.

CW03 Greg Ressio, USCG Liaison, concurred on this change since it affect permanent facilities in the USCG area.

Alec Melkonians - Asst. Project Manager for the SFOBB Toll Bridge Program requested this change per Memorandum dated January 18, 2008.

This change was concurred by Greg Ressio - USCG Liaison and Amy Fowler - CT Environmental Manager.

CT Maintenance concurrence is not required since the facilitiy will be maintained by the United States Coast Guard.

CONCURRED BY:			
Construction Engineer:		Date	
Bridge Engineer:		Date	
Project Engineer:	Alec Melkonians	Date	1/18/08
Project Manager:		Date	
FHWA Rep.:		Date	
Environmental:	Courtney Cacace, Biologist	Date	1/23/08
Other (specify):	Rafael Montes, BCDC	Date	1/9/08
Other (specify):	Gregory Ressio, USCG	Date	1/30/08
District Prior Approval By:		Date	
HQ (Issue Approve) By:		Date	
Resident Engineer's Signature:		Date	3-3-08

ESTIMATE OF COST

	THIS REQUEST	TOTAL TO DATE
ITEMS	$0.00	$0.00
FORCE ACCOUNT	$80,000.00	$80,000.00
AGREED PRICE	$83,223.00	$83,223.00
ADJUSTMENT	$0.00	$0.00
TOTAL	$163,223.00	$163,223.00

FEDERAL PARTICIPATION

☐ PARTICIPATING ☐ PARTICIPATING IN PART ☐ NONE
☐ NON-PARTICIPATING (MAINTENANCE) ☑ NON-PARTICIPATING

FEDERAL SEGREGATION (if more than one Funding Source or P.I.P. type)
☑ CCO FUNDED PER CONTRACT ☐ CCO FUNDED AS FOLLOWS

FEDERAL FUNDING SOURCE	PERCENT

ADA Notice: For individuals with sensory disabilities, this document is available in alternate formats. For information call: (916) 654-6410 or TDD (916) 654-3880 or write Records and Forms Management, 1120 N Street, MS-89, Sacramento, CA 95814.

STATE OF CALIFORNIA - DEPARTMENT OF TRANSPORTATION

CONTRACT CHANGE ORDER

Change Requested by:

CCO 111 | Suppl. No. 1 | Contract No. 04 - 0120R4 | Road SF-80-12.6/13.2 | FED. AID LOC.: ACBRIM-080-1(097)N

To: CC MYERS INC

You are directed to make the following changes from the plans and specifications or do the following described work not included in the plans and specifications for this contract. ***NOTE: This change order is not effective until approved by the Engineer.***

Description of work to be done, estimate of quantities and prices to be paid. (Segregate between additional work at contract price, agreed price and force account.) Unless otherwise stated, rates for rental of equipment cover only such time as equipment is actually used and no allowance will be made for idle time. This last percentage shown is the net accumulated increase or decrease from the original quantity in the Engineer's Estimate.

Extra Work at Lump Sum:

Compensate the Contractor for the additional cost incurred in constructing 50 square meters of additional parking lot space on March 14, 2008 within the United States Coast Guard's area as per Engineer's direction on site.

For this work, the Contractor agrees to accept a lum sum price of $8,940.00. This sum constitutes full and complete compensation including all markups and incidental work for the work of this change.

Total cost of Extra Work at Lump Sum $8,940.00

Estimated Cost: Increase ☑ Decrease ☐ $8,940.00

By reason of this order the time of completion will be adjusted as follows: 0 days

Submitted by

Signature	Resident Engineer	Date
	BILL CASEY	5-14-08

Approval Recommended by

Signature	Area Construction Manager	Date
	DENNIS TURCHON	5/16/08

Engineer Approval by

Signature	Area Construction Manager	Date
	DENNIS TURCHON	7/2/08

We the undersigned contractor, have given careful consideration to the change proposed and agree, if this proposal is approved, that we will provide all equipment, furnish the materials, except as may otherwise be noted above, and perform all services necessary for the work above specified, and will accept as full payment therefor the prices shown above.

NOTE: If you, the contractor, do not sign acceptance of this order, your attention is directed to the requirements of the specifications as to proceeding with the ordered work and filing a written protest within the time therein specified.

Contractor Acceptance by

Signature	(Print name and title)	Date
Dewey C Lee Jr	DEWEY C. LEE JR. Contract Manager	6/3/08

STATE OF CALIFORNIA - DEPARTMENT OF TRANSPORTATION

CONTRACT CHANGE ORDER MEMORANDUM

DATE: 4/2/2009 Page 1 of 1

TO: MIKE FORNER / DEANNA VILCHECK	FILE: E.A. 04 - 0120R4
FROM: BILL CASEY	CO-RTE-PM SF-80-12.6/13.2
	FED. NO. ACBRIM-080-1(097)N
CCO#: 111 SUPPLEMENT#: 2 Category Code: AXZZ	CONTINGENCY BALANCE (incl. this change) $59,339,602.55
COST: $120,000.00 INCREASE ☑ DECREASE ☐	HEADQUARTERS APPROVAL REQUIRED? ☑ YES ☐ NO
SUPPLEMENTAL FUNDS PROVIDED: $0.00	IS THIS REQUEST IN ACCORDANCE WITH ENVIRONMENTAL DOCUMENTS? ☑ YES ☐ NO
CCO DESCRIPTION: Additional Funds for USCG Carport Canopy	PROJECT DESCRIPTION: CONSTRUCT ROUTE 80 TEMP BYPASS STRUCTURE

Original Contract Time:	Time Adj. This Change:	Previously Approved CCO Time Adjustments:	Percentage Time Adjusted: (including this change)	Total # of Unreconciled Deferred Time CCO(s): (including this change)
475 Day(s)	0 Day(s)	1195 Day(s)	252 %	7

THIS CHANGE ORDER PROVIDES FOR:

Providing additional funds for constructing a carport canopy within the United States Coast Guard's (USCG) area.

This project, the Temporary Bypass Structure (TBS), was awarded in March 2004 to construct a detour that will allow for the tie in of the new east span of the San Francisco Oakland Bay Bridge to Yerba Buena Island. The TBS encompasses three main structures, the East Tie-In (ETI) to the existing bridge, the West Tie-In (WTI) to Yerba Buena Island and the Viaduct structure between the two tie ins.

The canopy change order work is necessary to protect USCG vehicles parked inside of the construction zone from potential falling debris and to mitigate disruptions to the USCG as a result of construction activities at the Viaduct structure.

The Contractor shall be compensated in a Extra Work at Force Account with an estimated cost of $ 120,000.00, which can be financed on the contract's contingency fund, bringing the total cost to be $292,163.00. A cost analysis is in the project files.

The Contractor's signature is not required for additional funds for Extra Work at Force Account change orders. Therefore this change order is being issued unilaterally.

No adjustment of the contract time is warranted, as this change does not affect the controlling operation.

This change has been concurred with by Alec Melkonians - Asst. Project Manager and Hong Wong - Project Engineer.

CT Maintenance concurrence is not required since the facilitiy is not a part of the permanent work of this project.

CONCURRED BY:			
Construction Engineer:		Date	
Bridge Engineer:		Date	
Project Engineer:	Hong Wong, PE	Date	4/3/09
Project Manager:	Alec Melkonians	Date	4/2/09
FHWA Rep.:		Date	
Environmental:		Date	
Other (specify):		Date	
Other (specify):		Date	
District Prior Approval By:		Date	
HQ (Issue Approve) By:	Bob Molera, HQ CCO Engineer	Date	
Resident Engineer's Signature:		Date	4-11-09

ESTIMATE OF COST

	THIS REQUEST	TOTAL TO DATE
ITEMS	$0.00	$0.00
FORCE ACCOUNT	$120,000.00	$200,000.00
AGREED PRICE	$0.00	$92,163.00
ADJUSTMENT	$0.00	$0.00
TOTAL	$120,000.00	$292,163.00

FEDERAL PARTICIPATION

☐ PARTICIPATING ☐ PARTICIPATING IN PART ☑ NONE
☐ NON-PARTICIPATING (MAINTENANCE) ☐ NON-PARTICIPATING

FEDERAL SEGREGATION (if more than one Funding Source or P.I.P. type)
☐ CCO FUNDED PER CONTRACT ☐ CCO FUNDED AS FOLLOWS

FEDERAL FUNDING SOURCE	PERCENT

ADA Notice: For individuals with sensory disabilities, this document is available in alternate formats. For information call: (916) 654-6410 or TDD (916) 654-3880 or write Records and Forms Management, 1120 N Street, MS-89, Sacramento, CA 95814.

STATE OF CALIFORNIA - DEPARTMENT OF TRANSPORTATION

CONTRACT CHANGE ORDER

Change Requested by: Engineer

CCO 111	Suppl. No. 3	Contract No. 04 - 0120R4	Road SF-80-12.6/13.2	FED. AID LOC.: ACBRIM-080-1(097)N

To: CC MYERS INC

You are directed to make the following changes from the plans and specifications or do the following described work not included in the plans and specifications for this contract. ***NOTE: This change order is not effective until approved by the Engineer.***

Description of work to be done, estimate of quantities and prices to be paid. (Segregate between additional work at contract price, agreed price and force account.) Unless otherwise stated, rates for rental of equipment cover only such time as equipment is actually used and no allowance will be made for idle time. This last percentage shown is the net accumulated increase or decrease from the original quantity in the Engineer's Estimate.

Extra Work at Force Account:

Provide additional funds for installing a carport canopy within the United States Coast Guard's parking lot.

Estimated cost of Extra Work at Force Account $80,000.00

RECEIVED
011044 SEP 23 09

Estimated Cost: Increase ☑ Decrease ☐ **$80,000.00**

By reason of this order the time of completion will be adjusted as follows: 0 days

Submitted by

Signature	Resident Engineer	Date
[signature]	BILL CASEY	9-15-09

Approval Recommended by

Signature	Area Construction Manager	Date
Deanna Vilcheck	DEANNA VILCHECK	9/15/09

Engineer Approval by

Signature	Area Construction Manager	Date
Deanna Vilcheck	DEANNA VILCHECK	9/17/09

We the undersigned contractor, have given careful consideration to the change proposed and agree, if this proposal is approved, that we will provide all equipment, furnish the materials, except as may otherwise be noted above, and perform all services necessary for the work above specified, and will accept as full payment therefor the prices shown above.

NOTE: If you, the contractor, do not sign acceptance of this order, your attention is directed to the requirements of the specifications as to proceeding with the ordered work and filing a written protest within the time therein specified.

Contractor Acceptance by

Signature	(Print name and title)	Date
N/A	N/A	N/A

STATE OF CALIFORNIA - DEPARTMENT OF TRANSPORTATION

CONTRACT CHANGE ORDER MEMORANDUM

DATE: 9/9/2009 Page 1 of 1

TO: MIKE FORNER / DEANNA VILCHECK	FILE: E.A. 04 - 0120R4
FROM: BILL CASEY	CO-RTE-PM SF-80-12.6/13.2
	FED. NO. ACBRIM-080-1(097)N
CCO#: 111 SUPPLEMENT#: 3 Category Code: AEZZ	CONTINGENCY BALANCE (incl. this change) $55,650,420.59
COST: $80,000.00 INCREASE ☑ DECREASE ☐	HEADQUARTERS APPROVAL REQUIRED? ☑ YES ☐ NO
SUPPLEMENTAL FUNDS PROVIDED: $0.00	IS THIS REQUEST IN ACCORDANCE WITH ENVIRONMENTAL DOCUMENTS? ☑ YES ☐ NO
CCO DESCRIPTION: Canopy &Parking Lot Addt'l Funds Request	**PROJECT DESCRIPTION:** CONSTRUCT ROUTE 80 TEMP BYPASS STRUCTURE

Original Contract Time:	Time Adj. This Change:	Previously Approved CCO Time Adjustments:	Percentage Time Adjusted: (including this change)	Total # of Unreconciled Deferred Time CCO(s): (including this change)
475 Day(s)	0 Day(s)	0 Day(s)	0 %	0

THIS CHANGE ORDER PROVIDES FOR:

Providing additional funds.

This project, the Temporary Bypass Structure (TBS), was awarded in March 2004 to construct a detour that will allow for the tie in of the new east span of the San Francisco Oakland Bay Bridge to Yerba Buena Island. The TBS encompasses three main structures, the East Tie-In (ETI) to the existing bridge, the West Tie-In (WTI) to Yerba Buena Island and the Viaduct structure between the two tie ins.

The original contract change order calls for in designing and installing a canopy and constructing a parking lot within the United States Coast Guard area. This change is necessary to protect USCG vehicles parked inside of the construction zone from potential falling debris and to mitigate disruptions to the USCG as a result of construction activities at the Viaduct structure.

This change order work is now complete and all the funds have been depleted, therefore, this funds request will pay all oustanding extra bills in the holding file. It is anticipated to pay the Contractor in a Extra Work at Force Account with an estimated cost of $ 80,000.00, which can be financed by the contract's contingency fund, bringing the total cost to be $372,163.00.

The Contractor's signature is not required for additional funds request for Extra Work at Force Account change orders. Therefore this change order is being issued unilaterally.

Alec Melkonians, Asst. Project Manager, and Hong Wong, Project Engineer, both concurred on this change. No adjustment of the contract time is warranted, as this change does not affect the controlling operation. CT Maintenance concurrence is not required since the facilitiy is not a part of the permanent work of this project.

CONCURRED BY:		
Construction Engineer:	BILL CASEY R.E.	Date 9-15-09
Bridge Engineer:		Date
Project Engineer:	Hong Wong, PE	Date 9/10/09
Project Manager:	Alec Melkonians	Date 9/9/09
FHWA Rep.:		Date
Environmental:		Date
Other (specify):		Date
Other (specify):		Date
District Prior Approval By:		Date
HQ (Issue Approve) By	Larry Sulhaney	Date 9/17/09
Resident Engineer's Signature:		Date 9-15-09

ESTIMATE OF COST

	THIS REQUEST	TOTAL TO DATE
ITEMS	$0.00	$0.00
FORCE ACCOUNT	$80,000.00	$280,000.00
AGREED PRICE	$0.00	$92,163.00
ADJUSTMENT	$0.00	$0.00
TOTAL	$80,000.00	$372,163.00

FEDERAL PARTICIPATION

☐ PARTICIPATING ☐ PARTICIPATING IN PART ☑ NONE
☐ NON-PARTICIPATING (MAINTENANCE) ☐ NON-PARTICIPATING

FEDERAL SEGREGATION (if more than one Funding Source or P.I.P. type)
☐ CCO FUNDED PER CONTRACT ☐ CCO FUNDED AS FOLLOWS

FEDERAL FUNDING SOURCE	PERCENT

ADA Notice: For individuals with sensory disabilities, this document is available in alternate formats. For information call: (916) 654-6410 or TDD (916) 654-3880 or write Records and Forms Management, 1120 N Street, MS-89, Sacramento, CA 95814.

CONTRACT CHANGE ORDER

Change Requested by: Engineer

CCO 112	Suppl. No. 0	Contract No. 04 - 0120R4	Road SF-80-12.6/13.2	FED. AID LOC.: ACBRIM-080-1(097)N

To: CC MYERS INC

You are directed to make the following changes from the plans and specifications or do the following described work not included in the plans and specifications for this contract. ***NOTE: This change order is not effective until approved by the Engineer.***

Description of work to be done, estimate of quantities and prices to be paid. (Segregate between additional work at contract price, agreed price and force account.) Unless otherwise stated, rates for rental of equipment cover only such time as equipment is actually used and no allowance will be made for idle time. This last percentage shown is the net accumulated increase or decrease from the original quantity in the Engineer's Estimate.

Extra Work at Force Account:

Perform the following work concerning long lead time materials necessary for the construction of the East Tie-In structure in accordance with Sheets No. 2 through 26 of this change order and as determined by the Engineer:

1) Furnish all 1524mm x 32 mm steel pipes for the tower legs of Skid Bents A and B.

2) Furnish all 64mm anchor rods and accessories for the skid bent tower leg to footing connections.

The plan sheets and specifications provided under this change order (Sheets 2 through 26) shall be used solely for the procurement of materials as determined by the Engineer. Final plans and specifications shall be issued under a separate change order providing for the construction of the ETI structure.

Any salvage value or disposal costs associated with the materials procured under this change order are deferred.

Estimated Cost of Extra Work at Force Account $2,000,000.00

Estimated Cost: Increase ☑ Decrease ☐ **$2,000,000.00**

By reason of this order the time of completion will be adjusted as follows: Deferred

Submitted by		
Signature	Resident Engineer BILL CASEY	Date 1-8-08
Approval Recommended by		
Signature Mike Forner	SFOBB Construction Manager MIKE FORNER	Date 1-8-08
Engineer Approval by		
Signature Mike Forner	SFOBB Construction Manager MIKE FORNER	Date 2-19-08

We the undersigned contractor, have given careful consideration to the change proposed and agree, if this proposal is approved, that we will provide all equipment, furnish the materials, except as may otherwise be noted above, and perform all services necessary for the work above specified, and will accept as full payment therefor the prices shown above.

NOTE: **If you, the contractor, do not sign acceptance of this order, your attention is directed to the requirements of the specifications as to proceeding with the ordered work and filing a written protest within the time therein specified.**

Contractor Acceptance by		
Signature D E Humick	(Print name and title) DANIEL E. HUMICK, PRESIDENT	Date 2/08/08

SFOBB TEMPORARY BYPASS STRUCTURE

EAST TIE-IN SEGMENT
ROLL – OUT ROLL – IN

SKID BENT PROCUREMENT SPECIFICATIONS

BRIDGE NO. 34-0006 (TEMP)

Location: 04-SF-80-12.6/13.2
EA No.: 0120R4

Project Title: South/South Detour – San Francisco-Oakland Bay Bridge
Project No.: 1295

Volume 1 of 1

CONTRACT NO. 04-0120R4

December 21, 2007

CONTRACT CHANGE ORDER NO 112

SHEET 2 OF 26

The special provisions contained herein have been prepared by or under the direction of the following Registered Persons.

STRUCTURES

REGISTERED CIVIL ENGINEER

CONTRACT NO. 04-0120R4

CONTRACT CHANGE ORDER NO 112

SHEET 3 OF 26

TABLE OF CONTENTS

TABLE OF CONTENTS 3
8-3.__ WELDING 4
WELDING QUALITY CONTROL 7
PAYMENT 11
10-1.__ STEEL STRUCTURES 12
GENERAL 12
MATERIALS 12
FABRICATED STEEL PIPE (SKID BENTS) 13
CHECK TESTING 13
ROTATIONAL CAPACITY TESTING PRIOR TO SHIPMENT TO JOB SITE 14
INSTALLATION TENSION TESTING AND ROTATIONAL CAPACITY TESTING AFTER ARRIVAL ON THE JOB SITE 19
SURFACE PREPARATION 20
SEALING 20
WELDING 20
MEASUREMENT AND PAYMENT 21

CONTRACT NO. 04-0120R4

CONTRACT CHANGE ORDER NO 112

SHEET 4 OF 26

8-3.__ WELDING

GENERAL

Flux cored welding electrodes conforming to the requirements of AWS A5.20 E6XT-4 or E7XT-4 shall not be used to perform welding for this project.

Wherever reference is made to the following AWS welding codes in the Standard Specifications, on the plans, or in these special provisions, the year of adoption for these codes shall be as listed:

AWS Code	Year of Adoption
D1.1	2006
D1.4	2005
D1.5	2002
D1.6	1999

Requirements of the AWS welding codes shall apply unless otherwise specified in the Standard Specifications, on the plans, or in these special provisions. Wherever the abbreviation AWS is used, it shall be equivalent to the abbreviations ANSI/AWS or AASHTO/AWS.

Section 6.1.1.1 of AWS D1.5 is replaced with the following:

Quality Control (QC) shall be the responsibility of the Contractor. As a minimum, the Contractor shall perform inspection and testing of each weld joint prior to welding, during welding, and after welding as specified in this section and as necessary to ensure that materials and workmanship conform to the requirements of the contract documents.

Unless otherwise specified, Sections 6.1.3 through 6.1.4.3 of AWS D1.1, Section 7.1.2 of AWS D1.4, and Sections 6.1.1.2 through 6.1.3.3 of AWS D1.5 are replaced with the following:

The QC Inspector shall be the duly designated person who acts for and on behalf of the Contractor for inspection, testing, and quality related matters for all welding.

Quality Assurance (QA) is the prerogative of the Engineer. The QA Inspector is the duly designated person who acts for and on behalf of the Engineer.

The QC Inspector shall be responsible for quality control acceptance or rejection of materials and workmanship, and shall be currently certified as an AWS Certified Welding Inspector (CWI) in conformance with the requirements in AWS QC1, "Standard for AWS Certification of Welding Inspectors."

The QC Inspector may be assisted by an Assistant QC Inspector provided that this individual is currently certified as an AWS Certified Associate Welding Inspector (CAWI) in conformance with the requirements in AWS QC1, "Standard for AWS Certification of Welding Inspectors." The Assistant QC Inspector may perform inspection under the direct supervision of the QC Inspector provided the assistant is always within visible and audible range of the QC Inspector. The QC Inspector shall be responsible for signing all reports and for determining if welded materials conform to workmanship and acceptance criteria. The ratio of QC Assistants to QC Inspectors shall not exceed 5 to 1.

When the term "Inspector" is used without further qualification, it shall refer to the QC Inspector.

When any work is welded in conformance with the provisions in Section 75, "Miscellaneous Metal," of the Standard Specifications, not including Section 75-1.035, "Bridge Joint Restrainer

Units," of the Standard Specifications, Section 6.1.4 of AWS D1.1 is replaced with the following:

The QC Inspector shall be responsible for quality control acceptance or rejection of materials and workmanship and shall be currently certified as an AWS CWI in conformance with the requirements in AWS QC1, "Standard for AWS Certification of Welding Inspectors," or as a Welding Inspector Specialist (WIS) in conformance with the requirements in AWS B5.2, "Specification for the Qualification of Welding Inspector Specialists and Welding Inspector Assistants."

Section 6.14.6, "Personnel Qualification," of AWS D1.1, Section 7.8, "Personnel Qualification," of AWS D1.4, and Section 6.1.3.4, "Personnel Qualification," of AWS D1.5 are replaced with the following:

Personnel performing nondestructive testing (NDT) shall be qualified and certified in conformance with the requirements of the American Society for Nondestructive Testing (ASNT) Recommended Practice No. SNT-TC-1A and the Written Practice of the NDT firm. The Written Practice of the NDT firm shall meet or exceed the guidelines of the ASNT Recommended Practice No. SNT-TC-1A. Individuals who perform NDT, review the results, and prepare the written reports shall be either:

A. Certified NDT Level II technicians, or;
B. Level III technicians who hold a current ASNT Level III certificate in that discipline and are authorized and certified to perform the work of Level II technicians.

Section 6.5.4 of AWS D1.5 is replaced with the following:

The QC Inspector shall inspect and approve each joint preparation, assembly practice, welding technique, joint fit-up, and the performance of each welder, welding operator, and tack welder to make certain that the applicable requirements of this code and the approved Welding Procedure Specification (WPS) are met. The QC Inspector shall examine the work to make certain that it meets the requirements of Sections 3 and 6.26. The size and contour of all welds shall be measured using suitable gages. Visual inspection for cracks in welds and base metal, and for other discontinuities shall be aided by strong light, magnifiers, or such other devices as may be helpful. Acceptance criteria different from those specified in this code may be used when approved by the Engineer.

Section 6.6.5, "Nonspecified NDT Other than Visual," of AWS D1.1, Section 7.6.5 of AWS D1.4 and Section 6.6.5 of AWS D1.5 shall not apply.

For any welding, the Engineer may direct the Contractor to perform NDT that is in addition to the visual inspection or NDT specified in the AWS or other specified welding codes, in the Standard Specifications, or in these special provisions. Except as provided for in these special provisions, additional NDT required by the Engineer, and associated repair work, will be paid for as extra work as provided in Section 4-1.03D, "Extra Work," of the Standard Specifications. Prior to release of welded material by the Engineer, if testing by NDT methods other than those originally specified discloses an attempt to defraud or reveals a gross nonconformance, all costs associated with the repair of the deficient area, including NDT of the weld and of the repair, and any delays caused by the repair, shall be at the Contractor's expense. A gross nonconformance is

defined as the sum of planar type rejectable indications in more than 20 percent of the tested length.

When less than 100 percent of NDT is specified for any weld, it is expected that the entire length of weld meet the specified acceptance-rejection criteria. Should any welding deficiencies be discovered by additional NDT directed or performed by the Engineer that utilizes the same NDT method as that originally specified, all costs associated with the repair of the deficient area, including NDT of the weld and of the weld repair, and any delays caused by the repair, shall be at the Contractor's expense.

Repair work to correct welding deficiencies discovered by visual inspection directed or performed by the Engineer, and any associated delays or expenses caused to the Contractor by performing these repairs, shall be at the Contractor's expense.

The Engineer shall have the authority to verify the qualifications or certifications of any welder, QC Inspector, or NDT personnel to specified levels by retests or other means approved by the Engineer.

Inspection and approval of all joint preparations, assembly practices, joint fit-ups, welding techniques, and the performance of each welder, welding operator, and tack welder shall be documented by the QC Inspector on a daily basis for each day welding is performed. For each inspection, including fit-up, Welding Procedure Specification (WPS) verification, and final weld inspection, the QC Inspector shall confirm and document compliance with the requirements of the AWS or other specified code criteria and the requirements of these special provisions on all welded joints before welding, during welding, and after the completion of each weld.

In addition to the requirements specified in the applicable code, the period of effectiveness for a welder's or welding operator's qualification shall be a maximum of 3 years for the same weld process, welding position, and weld type. If welding will be performed without gas shielding, then qualification shall also be without gas shielding. Excluding welding of fracture critical members, a valid qualification at the beginning of work on a contract will be acceptable for the entire period of the contract, as long as the welder's or welding operator's work remains satisfactory.

In addition to the requirements of AWS D1.1, welding procedures qualification for work welded in conformance with that code shall conform to the following requirements:

A. The travel speed, amperage, and voltage values that are used for tests conducted per AWS D1.1, Section 4.1.1, shall be consistent for each pass in a weld joint and shall in no case vary by more than ±10 percent for travel speed, ±10 percent for amperage, and ±7 percent for voltage as measured from a predetermined target value or average within each weld pass. The travel speed shall in no case vary by more than ±15 percent when using submerged arc welding.
B. When a nonstandard weld joint is to be made using a combination of WPSs, a single test may be conducted combining the WPSs to be used in production, provided the essential variables, including weld bead placement, of each process are limited to those established in Table 4.5.

In addition to the requirements of AWS D1.5, Section 5.12 or 5.13, welding procedures qualification for work welded in conformance with that code shall conform to the following requirements:

A. Unless considered prequalified, fillet welds shall be qualified in each position. The fillet weld soundness test shall be conducted using the essential variables of the WPS as established by the Procedure Qualification Record (PQR).

B. For qualification of joints that do not conform to Figures 2.4 and 2.5 of AWS D1.5, a minimum of two WPS qualification tests are required. The tests shall be conducted using both Figure 5.1 and Figure 5.3. The test conforming to Figure 5.1 shall be conducted in conformance with AWS D1.5, Section 5.12 or 5.13. The test conforming to Figure 5.3 shall be conducted using the welding electrical parameters that were established for the test conducted conforming to Figure 5.1. The ranges of welding electrical parameters established during welding per Figure 5.1 in conformance with AWS D1.5, Section 5.12, shall be further restricted according to the limits in Table 5.3 during welding per Figure 5.3.

C. Multiple zones within a weld joint may be qualified. The travel speed, amperage, and voltage values that are used for tests conducted per AWS D1.5 Section 5.13 shall be consistent for each pass in a weld joint, and shall in no case vary by more than ±10 percent for travel speed, ±10 percent for amperage, and ±7 percent for voltage as measured from a predetermined target value or average within each weld pass or zone. The travel speed shall in no case vary by more than ±15 percent when using submerged arc welding.

D. For a WPS qualified in conformance with AWS D1.5 Section 5.13, the values to be used for calculating ranges for current and voltage shall be based on the average of all weld passes made in the test. Heat input shall be calculated using the average of current and voltage of all weld passes made in the test for a WPS qualified in conformance with Section 5.12 or 5.13.

E. Macroetch tests are required for WPS qualification tests, and acceptance shall be per AWS D1.5 Section 5.19.3.

F. When a nonstandard weld joint is to be made using a combination of WPSs, a test conforming to Figure 5.3 may be conducted combining the WPSs to be used in production, provided the essential variables, including weld bead placement, of each process are limited to those established in Table 5.3.

G. Prior to preparing mechanical test specimens, the PQR welds shall be inspected by visual and radiographic tests. Backing bar shall be 75 mm in width and shall remain in place during NDT testing. Results of the visual and radiographic tests shall comply with AWS D1.5 Section 6.26.2, excluding Section 6.26.2.2. Test plates that do not comply with both tests shall not be used.

WELDING QUALITY CONTROL

Welding quality control shall conform to the requirements in the AWS or other specified welding codes, the Standard Specifications, and these special provisions.

Unless otherwise specified, welding quality control shall apply when any work is welded in conformance with the provisions in Section 49, "Piling," Section 52, "Reinforcement," Section 55, "Steel Structures," or Section 75-1.035, "Bridge Joint Restrainer Units," of the Standard Specifications.

All welding will require inspection by the Engineer. The Contractor shall request inspection at least 3 working days prior to the beginning of welding for locations within California and 5 working days for locations outside of California. The Contractor shall request inspection at:

http://www.dot.ca.gov/hq/esc/Translab/smbforms.htm

Continuous inspection shall be provided when any welding is being performed. Continuous inspection, as a minimum, shall include having a QC Inspector within such close proximity of all

welders or welding operators so that inspections by the QC Inspector of each welding operation at each welding location does not lapse for a period exceeding 30 minutes.

When joint weld details that are not prequalified to the details of Section 3 of AWS D1.1 or to the details of Figure 2.4 or 2.5 of AWS D1.5 are proposed for use in the work, the joint details, their intended locations, and the proposed welding parameters and essential variables, shall be approved by the Engineer. The Contractor shall allow the Engineer 2 weeks to complete the review of the proposed joint detail locations. In the event the Engineer fails to complete the review within the time allowed, and if, in the opinion of the Engineer, completion of the work is delayed or interfered with by reason of the Engineer's delay in completing the review, the Contractor will be compensated for any resulting loss, and an extension of time will be granted, in the same manner as provided for in Section 8-1.09, "Right of Way Delays," of the Standard Specifications. Upon approval of the proposed joint detail locations and qualification of the proposed joint details, welders and welding operators using these details shall perform a qualification test plate using the WPS variables and the joint detail to be used in production. The test plate shall have the maximum thickness to be used in production and a minimum length of 460 mm. The test plate shall be mechanically and radiographically tested. Mechanical and radiographic testing and acceptance criteria shall be as specified in the applicable AWS codes.

The Engineer will witness all qualification tests for WPSs that were not previously approved by the Department. Unless otherwise specified, an approved independent third party will witness the qualification tests for welders or welding operators. The independent third party shall be a current CWI and shall not be an employee of the contractor performing the welding. The Contractor shall allow the Engineer 2 weeks to review the qualifications and copy of the current certification of the independent third party. In the event the Engineer fails to complete the review within the time allowed, and if, in the opinion of the Engineer, completion of the work is delayed or interfered with by reason of the Engineer's delay in completing the review, the Contractor will be compensated for any resulting loss, and an extension of time will be granted, in the same manner as provided for in Section 8-1.09, "Right of Way Delays," of the Standard Specifications. The Contractor shall notify the Engineer one week prior to performing any qualification tests. Witnessing of qualification tests by the Engineer shall not constitute approval of the intended joint locations, welding parameters, or essential variables.

The Contractor shall designate in writing a welding Quality Control Manager (QCM). The QCM shall be responsible directly to the Contractor for the quality of welding, including materials and workmanship, performed by the Contractor and subcontractors.

The QCM shall be the sole individual responsible to the Contractor for submitting, receiving, reviewing, and approving all correspondence, required submittals, and reports to and from the Engineer. The QCM shall be a registered professional engineer or shall be currently certified as a CWI.

Unless the QCM is hired by a subcontractor providing only QC services, the QCM shall not be employed or compensated by any subcontractor, or by other persons or entities hired by subcontractors, who will provide other services or materials for the project. The QCM may be an employee of the Contractor.

Welding inspection personnel or NDT firms to be used in the work shall not be employed or compensated by any subcontractor, or by other persons or entities hired by subcontractors, who will provide other services or materials for the project, except for the following conditions:

A. The work is welded in conformance with AWS D1.5 and is performed at a permanent fabrication or manufacturing facility that is certified under the AISC Quality Certification Program, Category Cbr, Major Steel Bridges and Fracture Critical endorsement F, when applicable.

B. The welding is performed on pipe pile material at a permanent pipe manufacturing facility authorized to apply the American Petroleum Institute (API) monogram for API 5L pipe.

For welding performed at such facilities, the inspection personnel or NDT firms may be employed or compensated by the facility performing the welding provided the facility maintains a QC program that is independent from production.

Prior to submitting the Welding Quality Control Plan (WQCP) required herein, a prewelding meeting between the Engineer, the Contractor's QCM, and a representative from each entity performing welding or inspection for this project, shall be held to discuss the requirements for the WQCP.

The Contractor shall submit to the Engineer, in conformance with the provisions in Section 5-1.02, "Plans and Working Drawings," of the Standard Specifications, 2 copies of a separate WQCP for each subcontractor or supplier for each item of work for which welding is to be performed.

The Contractor shall allow the Engineer 2 weeks to review the WQCP submittal after a complete plan has been received. No welding shall be performed until the WQCP is approved in writing by the Engineer. In the event the Engineer fails to complete the review within the time allowed, and if, in the opinion of the Engineer, completion of the work is delayed or interfered with by reason of the Engineer's delay in completing the review, the Contractor will be compensated for any resulting loss, and an extension of time will be granted, in the same manner as provided for in Section 8-1.09, "Right of Way Delays," of the Standard Specifications.

An amended WQCP or any addendum to the approved WQCP shall be submitted to, and approved in writing by the Engineer, for proposed revisions to the approved WQCP. An amended WQCP or addendum will be required for revisions to the WQCP, including but not limited to a revised WPS; additional welders; changes in NDT firms, QC, or NDT personnel or procedures; or updated systems for tracking and identifying welds. The Engineer shall have one week to complete the review of the amended WQCP or addendum. Work affected by the proposed revisions shall not be performed until the amended WQCP or addendum has been approved. In the event the Engineer fails to complete the review within the time allowed, and if, in the opinion of the Engineer, completion of the work is delayed or interfered with by reason of the Engineer's delay in completing the review, the Contractor will be compensated for any resulting loss, and an extension of time will be granted, in the same manner as provided for in Section 8-1.09, "Right of Way Delays," of the Standard Specifications.

Information regarding the contents, format, and organization of a WQCP, is available at the Transportation Laboratory and at:

http://www.dot.ca.gov/hq/esc/Translab/smbresources.htm

After final approval of the WQCP, amended WQCP, or addendum, the Contractor shall submit 7 copies to the Engineer of the approved documents. A copy of the Engineer approved document shall be available at each location where welding is to be performed.

A daily production log for welding shall be kept for each day that welding is performed. The log shall clearly indicate the locations of all welding. The log shall include the welders' names, amount of welding performed, any problems or deficiencies discovered, and any testing or repair work performed, at each location. The daily report from each QC Inspector shall also be included in the log.

The following items shall be included in a Welding Report that is to be submitted to the Engineer within 2 weeks following the performance of any welding:

A. A daily production log.
B. Reports of all visual weld inspections and NDT.
C. Radiographs and radiographic reports, and other required NDT reports.
D. A summary of welding and NDT activities that occurred during the reporting period.
E. Reports of each application of heat straightening.
F. A summarized log listing the rejected lengths of weld by welder, position, process, joint configuration, and piece number.
G. Documentation that the Contractor has evaluated all radiographs and other nondestructive tests and corrected all rejectable deficiencies, and that all repaired welds have been reexamined using the required NDT and found acceptable.

The following information shall be clearly written on the outside of radiographic envelopes: name of the QCM, name of the nondestructive testing firm, name of the radiographer, date, contract number, complete part description, and all included weld numbers, report numbers, and station markers or views, as detailed in the WQCP. In addition, all interleaves shall have clearly written on them the part description and all included weld numbers and station markers or views, as detailed in the WQCP. A maximum of 2 pieces of film shall be used for each interleave.

Reports of all visual inspections and NDT shall be signed by the inspector or technician and submitted daily to the QCM for review and signature prior to submittal to the Engineer. Corresponding names shall be clearly printed or typewritten next to all signatures. Reports of all NDT, whether specified, additional, or informational, performed by the Contractor shall be submitted to the Engineer.

The Engineer will review the Welding Report to determine if the Contractor is in conformance with the WQCP. Unless otherwise specified, the Engineer shall be allowed 2 weeks to review the report and respond in writing after the complete Welding Report has been received. Prior to receiving notification from the Engineer of the Contractor's conformance with the WQCP, the Contractor may encase in concrete or cover welds for which the Welding Report has been submitted. However, should the Contractor elect to encase or cover those welds prior to receiving notification from the Engineer, it is expressly understood that the Contractor shall not be relieved of the responsibility for incorporating material in the work that conforms to the requirements of the plans and specifications. Material not conforming to these requirements will be subject to rejection. Should the Contractor elect to wait to encase or cover welds pending notification by the Engineer, and in the event the Engineer fails to complete the review within the time allowed, and if, in the opinion of the Engineer, completion of the work is delayed or interfered with by reason of the Engineer's delay in completing the review, the Contractor will be compensated for any resulting loss, and an extension of time will be granted, in the same manner as provided for in Section 8-1.09, "Right of Way Delays," of the Standard Specifications.

In addition to the requirements in AWS D1.1 and AWS D1.5, second-time excavations of welds or base metal to repair unacceptable discontinuities, regardless of NDT method, and all repairs of cracks require prior approval of the Engineer.

The Engineer shall be notified immediately in writing when welding problems, deficiencies, base metal repairs, or any other type of repairs not submitted in the WQCP are discovered, and also of the proposed repair procedures to correct them. For requests to perform second-time repairs or repairs of cracks, the Contractor shall include an engineering evaluation of the proposed repair. The engineering evaluation, at a minimum, shall address the following:

A. What is causing each defect?
B. Why the repair will not degrade the material properties?

CONTRACT NO. 04012OR4
CONTRACT CHANGE ORDER NO 112
SHEET 11 OF 26

C. What steps are being taken to prevent similar defects from happening again?

The Contractor shall allow the Engineer one week to review these procedures. No remedial work shall begin until the repair procedures are approved in writing by the Engineer. In the event the Engineer fails to complete the review within the time allowed, and if, in the opinion of the Engineer, completion of the work is delayed or interfered with by reason of the Engineer's delay in completing the review, the Contractor will be compensated for any resulting loss, and an extension of time will be granted, in the same manner as provided for in Section 8-1.09, "Right of Way Delays," of the Standard Specifications.

The QCM shall sign and furnish to the Engineer, a Certificate of Compliance in conformance with the provisions in Section 6-1.07, "Certificates of Compliance," of the Standard Specifications for each item of work for which welding was performed. The certificate shall state that all of the materials and workmanship incorporated in the work, and all required tests and inspections of this work, have been performed in conformance with the details shown on the plans, the Standard Specifications, and these special provisions.

PAYMENT

Full compensation for conforming to the requirements of "Welding" shall be considered as included in the contract prices paid for the various items of work involved and no additional compensation will be allowed therefor.

CONTRACT NO. 04-0120R4

CONTRACT CHANGE ORDER NO 112

SHEET 12 OF 26

10-1.__ STEEL STRUCTURES

Construction of steel structures, including skid bents, shall conform to the provisions in Section 55, "Steel Structures," of the Standard Specifications and these special provisions.

GENERAL

Skid bents shall be constructed by the Contractor and, when no longer required for the construction of the work, skid bents shall become the property of the Contractor. The Contractor shall dispose of skid bents in accordance with the requirements in Section 7-1.13, "Disposal of Materials Outside the Highway Right of Way," of the Standard Specifications.

Attention is directed to "Welding" in Section 8, "Materials," of these special provisions. Fabrication and erection shall conform to ANSI/AASHTO/AWS D1.5, the Standard Specifications, and these special provisions.

Attention is directed to "Bridge Removal," of these special provisions regarding removal of skid bents.

Facing of Bearing Surfaces

The surface finish of bearing and base plates and other bearing surfaces that are to come in contact with each other or with concrete shall meet the ANSI surface roughness requirements as defined in ANSI B46.1, "Surface Roughness, Waviness, and Lay," Part I:

Bearing Surface	ANSI Requirement
Heavy plates in contact in shoes to be welded	1 000
Milled ends of compression members, milled or ground ends of stiffeners and fillers	500
Sliding bearings	125

The following substitutions, A 490 for A 490M only or A 325 for A 325M only as shown on the plans, of high-strength steel fasteners may be made:

METRIC SIZE SHOWN ON THE PLANS	SIZE TO BE SUBSTITUTED
ASTM Designation: A490M or A 325M (Nominal bolt diameter (mm))	ASTM Designation: A490 or A 325 (Nominal bolt diameter (inch))
13, 12.70, or M12	1/2
16, 15.88, or M16	5/8
19, 19.05, or M20	3/4
22, 22.22, or M22	7/8
24, 25, 25.40, or M24	1
29, 28.58, or M27	1 1/8
32, 31.75, or M30	1 1/4
38, 38.10, or M36	1 1/2

MATERIALS

Structural steel rolled shapes shall conform to ASTM Designation: A709M or as otherwise shown in the plans. Charpy V-notch testing shall use Zone 2 requirements.

HSS members shall conform to ASTM Designation: A500, Grade B, or ASTM Designation: A847, with Charpy V-Notch testing performed on a heat basis (H) per ASTM Designation: A673 with an acceptance criteria of 20J at 4C minimum average.

Steel for members, shown on the plans as fracture critical members, shall conform to the requirements in AWS D1.5, Section 12, "AASHTO/AWS Fracture Control Plan (FCP) for Non-Redundant Members." Charpy V-notch (CVN) impact values for fracture critical members shall conform to the requirements for Zone 2.

FABRICATED STEEL PIPE (SKID BENTS)

Cylindrical tubular members formed from steel plate shall be fabricated as single seam welded pipe in accordance with the requirements in API "Specification for the Fabrication of Structural Steel Pipe- API SPECIFICATION 2B," 6th Edition, with the following modifications:

A. Plate shall conform to the requirements on the plans
B. Welding consumables shall conform to AWS D1.5, Table 4.1 for matching filler
C. Weld procedures shall be qualified and applied in accordance with AWS D1.5, including Charpy V-Notch testing and welding heat input control.
D. Charpy V-Notch tests of the coarse grained heat affected zone shall be included in the weld procedure qualification tests and shall meet the base steel Zone 1 requirement
E. Longitudinal seams shall be examined 100% by radiographic or ultrasonic inspection in accordance with API Spec 2B.
F. Acceptance criteria for RT and UT in API Spec 2B, Section 7.3 shall be replaced by AWS D1.5, Section 6.26 for welds in tension.

CHECK TESTING

Structural steel shall conform to the designated ASTM Standard and the check testing requirements of this section.

Check samples shall be furnished for each heat of maximum thickness of:

A. Tension flanges and webs of fracture critical members.

Steel plates, shapes, or bars containing check samples shall be furnished from the mill with extra length in order to provide for removal of material for check samples at the point of fabrication. Check samples may be cut from either end of the designated plate, shape, or bar.

At the option of the Contractor, check samples may be removed at the rolling mill rather than at the point of fabrication. The sample will be removed from the mill plate that will be stripped by the fabricator to produce the designated plate and may be taken from any location within that plate. The mill plate from which samples are removed shall be marked with the same identifying numbers as are used on the samples.

Material for check samples shall be removed by the Contractor in the presence of the Engineer. Check samples for plates wider than 610 mm shall be 355 mm wide and 460 mm long with the long dimension transverse to the direction of rolling. Check samples for all other products shall be 460 mm long, taken in the direction of rolling, and the width shall be the product width. Check samples shall be removed and delivered to the Engineer before the material is fabricated into components. The direction of rolling, heat numbers, and plate numbers shall be marked on the samples with paint or other indelible marking material or may be steel stamped in one corner of the plate.

Check samples shall be delivered to the Transportation Laboratory at the Contractor's expense. The check samples will be tested by the Transportation Laboratory for compliance

with the requirements specified in ASTM and these special provisions. Check sample test results will be reported to the Contractor within 3 weeks of delivery to the Transportation Laboratory. In the event several samples are submitted on the same day, an additional day will be added for every 2 samples submitted. The test report will be made for the group of samples.

The results of the tensile and impact tests shall not vary more than 5 percent below the specified minimum or 5 percent above the specified maximum requirements. If the initial check test results vary more than 5 percent but not more than 10 percent from the specified requirements, a retest may be performed on another sample from the same heat and thickness. The results of the retest shall not vary more than 5 percent from the original specified requirements. If the results of check tests exceed these permissible variations, material planned for use from the heat represented by said check samples shall be subject to rejection.

ROTATIONAL CAPACITY TESTING PRIOR TO SHIPMENT TO JOB SITE

Rotational capacity tests shall be performed on all lots of high-strength fastener assemblies prior to shipment of these lots to the project site. Zinc-coated assemblies shall be tested after all fabrication, coating, and lubrication of components has been completed. One hardened washer shall be used under each nut for the tests.

The requirements of this section do not apply to high-strength cap screws or high-strength bolts used for slip base plates.

Each combination of bolt production lot, nut lot, and washer lot shall be tested as an assembly.

A rotational capacity lot number shall be assigned to each combination of lots tested. Each shipping unit of fastener assemblies shall be plainly marked with the rotational capacity lot number.

Two fastener assemblies from each rotational capacity lot shall be tested.

The following equipment, procedure, and acceptance criteria shall be used to perform rotational capacity tests on and determine acceptance of long bolts. Fasteners are considered to be long bolts when full nut thread engagement can be achieved when installed in a bolt tension measuring device:

A. Long Bolt Test Equipment:

1. Calibrated bolt tension measuring device with adequate tension capacity for the bolts being tested.
2. Calibrated dial or digital torque wrench. Other suitable tools will be required for performing Steps 7 and 8 of the Long Bolt Test Procedure. A torque multiplier may be required for large diameter bolts.
3. Spacer washers or bushings. When spacer washers or bushings are required, they shall have the same inside diameter and equal or larger outside diameter as the appropriate hardened washers conforming to the requirements in ASTM Designation: F436.
4. Steel beam or member, such as a girder flange or cross frame, to which the bolt tension measuring device will be attached. The device shall be accessible from the ground.

B Long Bolt Test Procedure:

1. Measure the bolt length. The bolt length is defined as the distance from the end of the threaded portion of the shank to the underside of the bolt head.

CONTRACT NO. 04-912024
CONTRACT CHANGE ORDER NO 112
SHEET 15 OF 26

2. Install the nut on the bolt so that 3 to 5 full threads of the bolt are located between the bearing face of the nut and the underside of the bolt head. Measure and record the thread stickout of the bolt. Thread stickout is determined by measuring the distance from the outer face of the nut to the end of the threaded portion of the shank.
3. Insert the bolt into the bolt tension measuring device and install the required number of washers, and additional spacers as needed, directly beneath the nut to produce the thread stickout measured in Step 2 of this procedure.
4. Tighten the nut using a hand wrench to a snug-tight condition. The snug tension shall not be less than the Table A value but may exceed the Table A value by a maximum of 2 kips.

Table A—High-Strength Fastener Assembly Tension Values to Approximate Snug-Tight Condition

Bolt Diameter (inches)	Snug Tension (kips)	
	A 325	A 490
1/2	1	2
5/8	2	2
3/4	3	4
7/8	4	5
1	5	6
1 1/8	6	8
1 1/4	7	10
1 3/8	9	12
1 1/2	10	15

5. Match-mark the assembly by placing a heavy reference start line on the face plate of the bolt tension measuring device which aligns with 1) a mark placed on one corner of the nut, and 2) a radial line placed across the flat on the end of the bolt, or on the exposed portions of the threads of tension control bolts. Place an additional mark on the outside of the socket that overlays the mark on the nut corner such that this mark will be visible while turning the nut. Make an additional mark on the face plate, either 2/3 of a turn, one turn, or 1 1/3 turn clockwise from the heavy reference start line, depending on the bolt length being tested as shown in Table B.

CONTRACT NO. 04-0120R4

CONTRACT CHANGE ORDER NO 112

SHEET 16 OF 26

A325 and A490 Table B

Required Nut Rotation for Rotational Capacity Tests[a,b]	
Bolt Length (measured in Step 1)	Required Rotation (turn)
4 bolt diameters or less	2/3
Greater than 4 bolt diameters but no more than 8 bolt diameters	1
Greater than 8 bolt diameters, but no more than 12 bolt diameters[c]	1 1/3
(a) Nut rotation is relative to bolt, regardless of the element (nut or bolt) being turned. For bolts installed by 1/2 turn and less, the tolerance shall be plus or minus 30 degrees; for bolts installed by 2/3 turn and more, the tolerance shall be plus or minus 45 degrees. (b) Applicable only to connections in which all material within grip of the bolt is steel. (c) When bolt length exceeds 12 diameters, the required rotation shall be determined by actual tests in a suitable tension device simulating the actual conditions.	

6. Turn the nut to achieve the applicable minimum bolt tension value listed in Table C. After reaching this tension, record the moving torque, in foot-pounds, required to turn the nut, and also record the corresponding bolt tension value in pounds. Torque shall be measured with the nut in motion. Calculate the value, T (in ft-lbs), where T=[(the measured tension in pounds) x (the bolt diameter in inches) / 48 in/ft].

Table C—Minimum Tension Values for High-Strength Fastener Assemblies

Bolt Diameter (inches)	Minimum Tension (kips)	
	A 325	A 490
½	12	15
5/8	19	24
¾	28	35
7/8	39	49
1	51	64
1 1/8	56	80
1 ¼	71	102
1 3/8	85	121
1 ½	103	148

7. Turn the nut further to increase bolt tension until the rotation listed in Table B is reached. The rotation is measured from the heavy reference line made on the face plate after the bolt was snug-tight. Record this bolt tension.
8. Loosen and remove the nut and examine the threads on both the nut and bolt.

C. Long Bolt Acceptance Criteria:

CONTRACT NO. 04-012024

CONTRACT CHANGE ORDER NO 112

SHEET 17 OF 26

1. An assembly shall pass the following requirements to be acceptable: 1) the measured moving torque (Step 6) shall be less than or equal to the calculated value, T (Step 6), 2) the bolt tension measured in Step 7 shall be greater than or equal to the applicable turn test tension value listed in Table D, 3) the nut shall be able to be removed from the bolt without signs of thread stripping or galling after the required rotation in Step 7 has been achieved, 4) the bolt does not shear from torsion or fail during the test, and 5) the assembly does not seize before the final rotation in Step 7 is reached. Elongation of the bolt in the threaded region between the bearing face of the nut and the underside of the bolt head is expected and will not be considered a failure. Both fastener assemblies tested from one rotational capacity lot shall pass for the rotational capacity lot to be acceptable.

Table D—Turn Test Tension Values

Bolt Diameter (inches)	Turn Test Tension (kips)	
	A 325	A 490
½	14	17
5/8	22	28
3/4	32	40
7/8	45	56
1	59	74
1 1/8	64	92
1 1/4	82	117
1 3/8	98	139
1 1/2	118	170

The following equipment, procedure, and acceptance criteria shall be used to perform rotational capacity tests on and determine acceptance of short bolts. Fasteners are considered to be short bolts when full nut thread engagement cannot be achieved when installed in a bolt tension measuring device:

A. Short Bolt Test Equipment:

1. Calibrated dial or digital torque wrench. Other suitable tools will be required for performing Steps 7 and 8 of the Short Bolt Test Procedure. A torque multiplier may be required for large diameter bolts.
2. Spud wrench or equivalent.
3. Spacer washers or bushings. When spacer washers or bushings are required, they shall have the same inside diameter and equal or larger outside diameter as the appropriate hardened washers conforming to the requirements in ASTM Designation: F436.
4. Steel plate or girder with a hole to install bolt. The hole size shall be 1.6 mm greater than the nominal diameter of the bolt to be tested. The grip length, including any plates, washers, and additional spacers as needed, shall provide the proper number of threads within the grip, as required in Step 2 of the Short Bolt Test Procedure.

B. Short Bolt Test Procedure:

1. Measure the bolt length. The bolt length is defined as the distance from the end of the threaded portion of the shank to the underside of the bolt head.

2. Install the nut on the bolt so that 3 to 5 full threads of the bolt are located between the bearing face of the nut and the underside of the bolt head. Measure and record the thread stickout of the bolt. Thread stickout is determined by measuring the distance from the outer face of the nut to the end of the threaded portion of the shank.
3. Install the bolt into a hole on the plate or girder and install the required number of washers and additional spacers as needed between the bearing face of the nut and the underside of the bolt head to produce the thread stickout measured in Step 2 of this procedure.
4. Tighten the nut using a hand wrench to a snug-tight condition. The snug condition shall be the full manual effort applied to the end of a 305 mm long wrench. This applied torque shall not exceed 20 percent of the maximum allowable torque in Table E.

Table E—Maximum Allowable Torque for High-Strength Fastener Assemblies

Bolt Diameter (inches)	Torque (ft-lbs)	
	A 325	A 490
½	145	180
5/8	285	360
3/4	500	630
7/8	820	1030
1	1220	1540
1 1/8	1500	2160
1 1/4	2130	3060
1 3/8	2800	3990
1 1/2	3700	5320

5. Match-mark the assembly by placing a heavy reference start line on the steel plate or girder which aligns with 1) a mark placed on one corner of the nut and 2) a radial line placed across the flat on the end of the bolt or on the exposed portions of the threads of tension control bolts. Place an additional mark on the outside of the socket that overlays the mark on the nut corner such that this mark will be visible while turning the nut. Make 2 additional small marks on the steel plate or girder, one 1/3 of a turn and one 2/3 of a turn clockwise from the heavy reference start line on the steel plate or girder.
6. Using the torque wrench, tighten the nut to the rotation value listed in Table F. The rotation is measured from the heavy reference line described in Step 5 made after the bolt was snug-tight. A second wrench shall be used to prevent rotation of the bolt head during tightening. Measure and record the moving torque after this rotation has been reached. The torque shall be measured with the nut in motion.

CONTRACT NO. 04-012024

CONTRACT CHANGE ORDER NO 112

SHEET 19 OF 26

A325 and A490 Table F

Nut Rotation Required for Turn-of-Nut Installation[a,b]	
Bolt Length (measured in Step 1)	Required Rotation (turn)
4 bolt diameters or less	1/3
(a) Nut rotation is relative to bolt, regardless of the element (nut or bolt) being turned. For bolts installed by 1/2 turn and less, the tolerance shall be plus or minus 30 degrees. (b) Applicable only to connections in which all material within grip of the bolt is steel.	

7. Tighten the nut further to the 2/3-turn mark as indicated in Table G. The rotation is measured from the heavy reference start line made on the plate or girder when the bolt was snug-tight. Verify that the radial line on the bolt end or on the exposed portions of the threads of tension control bolts is still in alignment with the start line.

A325 and A490 Table G

Required Nut Rotation for Rotational Capacity Test	
Bolt Length (measured in Step 1)	Required Rotation (turn)
4 bolt diameters or less	2/3

8. Loosen and remove the nut and examine the threads on both the nut and bolt.

C. Short Bolt Acceptance Criteria:

1. An assembly shall pass the following requirements to be acceptable: 1) the measured moving torque from Step 6 shall be less than or equal to the maximum allowable torque from Table E, 2) the nut shall be able to be removed from the bolt without signs of thread stripping or galling after the required rotation in Step 7 has been achieved, 3) the bolt does not shear from torsion or fail during the test, and 4) the assembly shall not seize before the final rotation in Step 7 is reached. Elongation of the bolt in the threaded region between the bearing face of the nut and the underside of the bolt head will not be considered a failure. Both fastener assemblies tested from one rotational capacity lot shall pass for the rotational capacity lot to be acceptable.

CONTRACT NO. 64-0120R4 CONTRACT CHANGE ORDER NO 112 SHEET 20 OF 20

INSTALLATION TENSION TESTING AND ROTATIONAL CAPACITY TESTING AFTER ARRIVAL ON THE JOB SITE

Installation tension tests and rotational capacity tests on high-strength fastener assemblies shall be performed by the Contractor prior to acceptance or installation and after arrival of the fastener assemblies on the project site. Installation tension tests and rotational capacity tests shall be performed at the job-site, in the presence of the Engineer, on each rotational capacity lot of fastener assemblies.

The requirements of this section do not apply to high-strength cap screws or high-strength bolts used for slip base plates.

Installation tension tests shall be performed on 3 representative fastener assemblies in conformance with the provisions in Section 8, "Installation," of the RCSC Specification. For short bolts, Section 8.2, "Pretensioned Joints," of the RCSC Specification shall be replaced by

the "Pre-Installation Testing Procedures," of the "Structural Bolting Handbook," published by the Steel Structures Technology Center, Incorporated.

The rotational capacity tests shall be performed in conformance with the requirements for rotational capacity tests in "Rotational Capacity Testing Prior to Shipment to Job Site" of these special provisions.

At the Contractor's expense, additional installation tension tests, tests required to determine job inspecting torque, and rotational capacity tests shall be performed by the Contractor on each rotational capacity lot, in the presence of the Engineer, if 1) any fastener is not used within 3 months after arrival on the jobsite, 2) fasteners are improperly handled, stored, or subjected to inclement weather prior to final tightening, 3) significant changes are noted in original surface condition of threads, washers, or nut lubricant, or 4) the Contractor's required inspection is not performed within 48 hours after all fasteners in a joint have been tensioned.

Failure of a job-site installation tension test or a rotational capacity test will be cause for rejection of unused fasteners that are part of the rotational capacity lot.

When direct tension indicators are used, installation verification tests shall be performed in conformance with Appendix Section X1.4 of ASTM Designation: F959, except that bolts shall be initially tensioned to a value 5 percent greater than the minimum required bolt tension.

SURFACE PREPARATION

For all bolted connections, the 1) contact surfaces, 2) outer surfaces of existing members that are within the grip and will be hidden by surfaces of outside existing members within the grip under bolt heads, nuts, and washers, and 3) inside surfaces of bolt holes shall be cleaned and coated before assembly in conformance with the provisions for cleaning and painting structural steel of these special provisions.

SEALING

The perimeter around all direct tension indicator gaps shall be completely sealed with non-silicone type sealing compound conforming to the provisions in Federal Specification TT-S-230, Type II. The sealant shall be gray in color and have a minimum thickness of 1.3 mm. If painting is required, the sealing compound shall be applied prior to painting.

When zinc-coated tension control bolts are used, the sheared end of each fastener shall be completely sealed with non-silicone type sealing compound conforming to the provisions in Federal Specification TT-S-230, Type II. The sealant shall be gray in color and shall have a minimum thickness of 1.3 mm. The sealant shall be applied to a clean sheared surface on the same day that the splined end is sheared off.

WELDING

Table 2.2 of AWS D1.5 is superseded by the following table:

Base Metal Thickness of the Thicker Part Joined, mm	Minimum Effective Partial Joint Penetration Groove Weld Size, * mm
Over 6 to 13 inclusive	5
Over 13 to 19 inclusive	6
Over 19 to 38 inclusive	8
Over 38 to 57 inclusive	10
Over 57 to 150 inclusive	13
Over 150	16

* Except the weld size need not exceed the thickness of the thinner part

CONTRACT NO. 04-0120R4
CONTRACT CHANGE ORDER NO 112
SHEET 21 OF 26

Backing for welds, subject to computed stresses, that is left in place in the completed structure shall be a single length. Backing shall be of the same material as the structural steel being welded. Single lengths of backing shall be obtained by using a continuous strip, or may consist of lengths of backing joined by full penetration butt welds. Butt welds in the backing material shall be subject to the same type and frequency of testing as specified for the type of joint in the material being joined. Butt welds in backing material shall be ground flush as necessary to obtain proper inspection and for proper fit-up in the welded joint with which the backing is to be used.

MEASUREMENT AND PAYMENT

If a portion of or all check samples are removed at a mill more than 480 air line kilometers from both Sacramento and Los Angeles, shop inspection expenses will be sustained by the State which are in addition to expenses incurred for fabrication site inspection. Payment to the Contractor for furnishing structural steel will be reduced $2,000 for each mill located more than 480 air line kilometers from both Sacramento and Los Angeles.

CONTRACT NO. 04-0120R4

CONTRACT CHANGE ORDER NO 112

SHEET 22 OF 26

DIST	COUNTY	ROUTE	KILOMETER POST TOTAL PROJECT	SHEET No	TOTAL
04	SF	80	12.6/13.2	120	214

Caltrans Metric

REGISTERED CIVIL ENGINEER

PLANS APPROVAL DATE

The State of California or its officers or agents shall not be responsible for the accuracy or completeness of electronic copies of this plan sheet.

REGISTERED PROFESSIONAL ENGINEER — M.E. Whitcraft — No. C47977 — Exp. 12.31.09 — CIVIL — STATE OF CALIFORNIA

T.Y. LIN / MOFFATT & NICHOL
Two Harrison Street, Suite 500
San Francisco, CA 94105

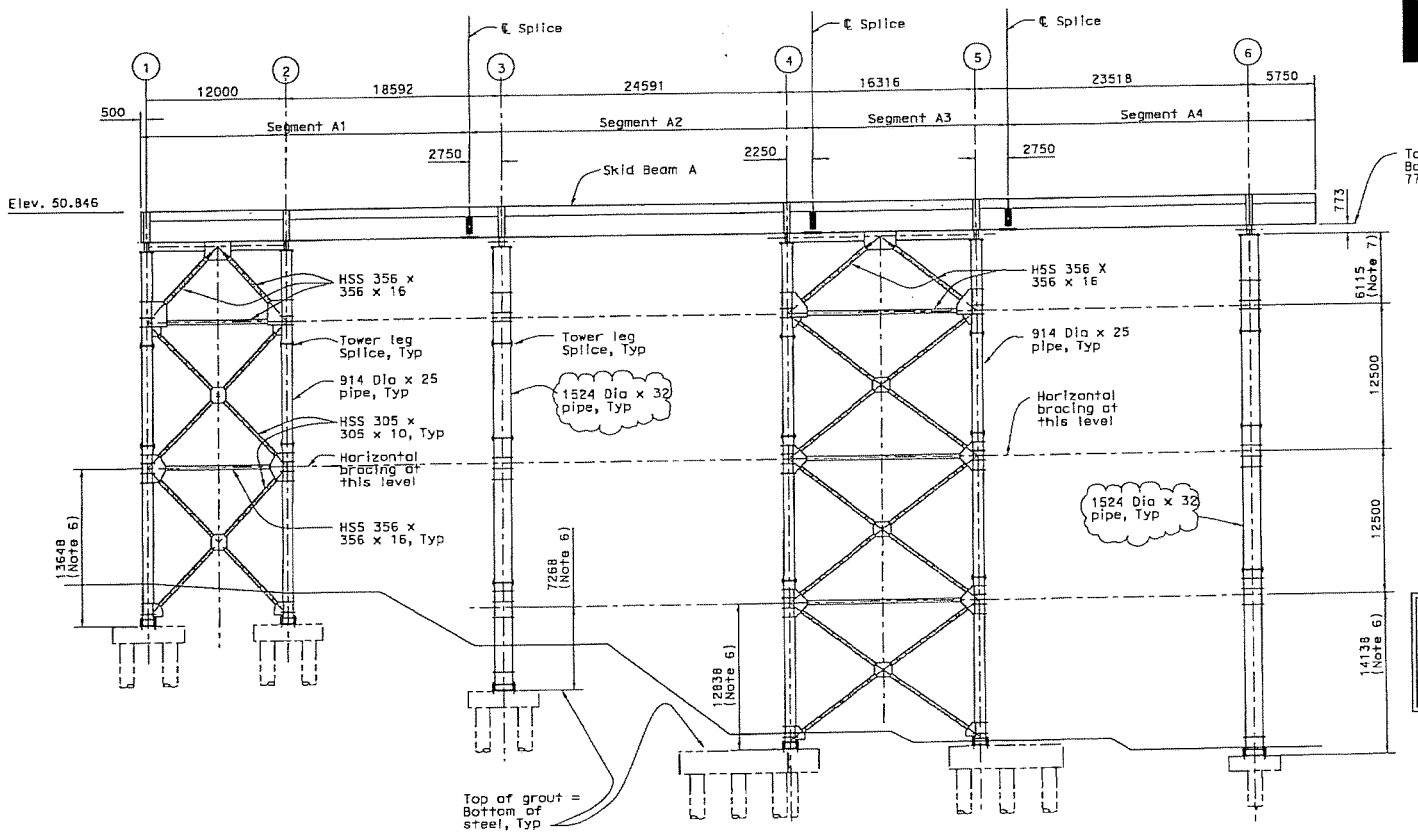

PROGRESS PRINT:
Not for Construction
This plan sheet shall be used for determining the quantities of 1524mm Dia. pipes only.

Notes:

1. All Structural plate interface connections shall be made with continuous complete joint penetration (CJP) welds, unless otherwise shown.
2. All frame bolts shall be 32 Dia A325, unless noted otherwise.
3. All tower leg splice connection bolts shall be A490 unless noted otherwise.
4. All diagonal bracings and horizontal strut connections are slip critical, unless noted otherwise.
5. For horizontal bracing details, see "Skid Bent Details No. 6" sheet.
6. Dimensions shown to bottom of steel base plate.
7. Dimensions shown to top of steel cap plate.

SECTION E-E

1:200
(Skid Bent A)
Grid (AW) shown
Grid (AE) similar

CONTRACT NO. 04-0120R4

CONTRACT CHANGE ORDER NO 112

SHEET 23 OF 26

ALL DIMENSIONS ARE IN MILLIMETERS UNLESS OTHERWISE SHOWN

SAN FRANCISCO OAKLAND BAY BRIDGE
EAST SPAN SEISMIC SAFETY PROJECT

EAST TIE-IN

SKID BENT SECTIONS NO. 2

DESIGN OVERSIGHT	DESIGN	BY	CHECKED	PREPARED FOR THE STATE OF CALIFORNIA DEPARTMENT OF TRANSPORTATION	PROJECT MANAGER	BRIDGE NO. 34-0006 (TEMP)	SHEET 120 OF 214
SIGN OFF DATE	DETAILS	BY	CHECKED			KILOMETER POST 12.6	
	QUANTITIES	BY	CHECKED				

DESIGN DETAIL SHEET (METRIC) (REV. 3/1/96)
DATE *TIME* Pen Table File

ORIGINAL SCALE IN MILLIMETERS FOR REDUCED PLANS 0 10 20 30 40 50 60 70 80 90 100

CU
EA 0120R4

DISREGARD PRINTS BEARING EARLIER REVISION DATES

REVISION DATES (PRELIMINARY STAGE ONLY) 11/30/97 12/17/97

FILE => p:\BB\04-012001\ETI\Advance Procurement\agak21.dgn

USERNAME => ALee DATE PLOTTED => 12/17/2007 TIME PLOTTED => 3:17:25 PM FILE => p:\BB\04-012001\ETI\Advance Procurement\agak21.dgn

DIST	COUNTY	ROUTE	KILOMETER POST TOTAL PROJECT	SHEET No.	TOTAL
04	SF	80	12.6/13.2	119	214

Caltrans Metric

REGISTERED CIVIL ENGINEER

PLANS APPROVAL DATE

The State of California or its officers or agents shall not be responsible for the accuracy or completeness of electronic copies of this plan sheet.

REGISTERED PROFESSIONAL ENGINEER No. C42977 Exp. 12.31.09 CIVIL STATE OF CALIFORNIA

T.Y. LIN / MOFFATT & NICHOL
Two Harrison Street, Suite 500
San Francisco, CA 94105

CONTRACT NO. 04-0120R4

CONTRACT CHANGE ORDER NO 112

SHEET 24 OF 26

PROGRESS PRINT:
Not for Construction
This plan sheet shall be used for determining the quantities of 1524mm Dia. pipes only.

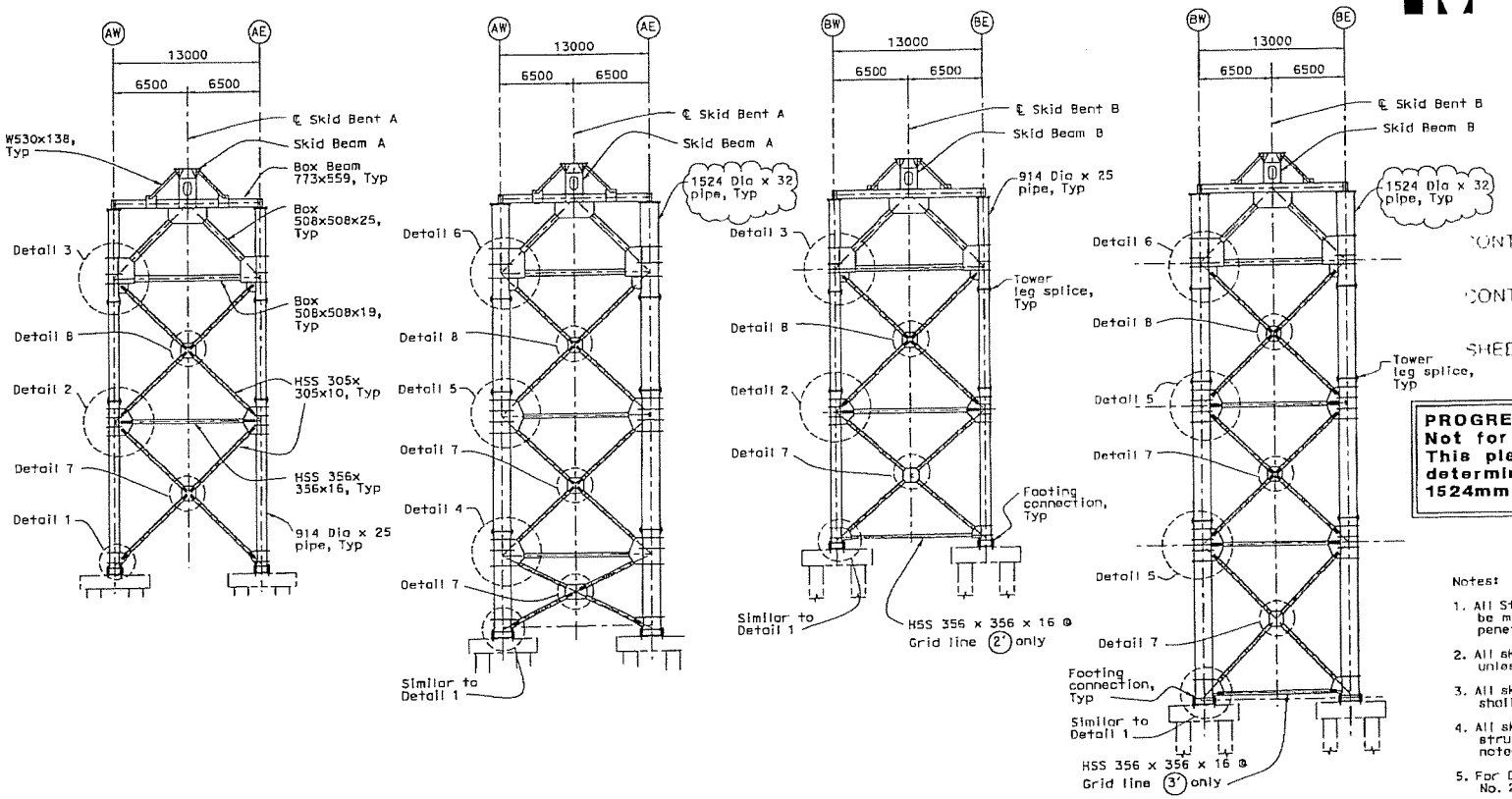

SECTION A-A
1:200
Bent (1) shown
Bents (2), (4) & (5) similar

SECTION B-B
1:200
Bent (3) shown
Bent (6) similar

SECTION C-C
1:200
Bent (1') shown
Bents (2'), (4') & (5') similar

SECTION D-D
1:200
Bent (6') shown
Bent (3') similar

Skid Bent A

Skid Bent B

Notes:

1. All Structural plate interface connections shall be made with continuous complete joint penetration (CJP) welds, unless otherwise shown.
2. All skid bent frame bolts shall be 32 Dia A325, unless noted otherwise.
3. All skid bent tower leg splice connection bolts shall be A490 unless noted otherwise.
4. All skid bent diagonal bracings and horizontal strut connections are slip critical, unless noted otherwise.
5. For Details 1 thru 3, see "Skid Bent Details No. 2" sheet.
6. For Details 4 thru 8, see "Skid Bents Details No. 6" sheet.
7. For tower leg splice details, see "Skid Bent Details No. 1" sheet.
8. For footing connection details, see "Skid Bent Details No. 1" sheet.
9. For Skid Bent heights, see "Skid Bent Sections No. 2 and 3" sheets.
10. For Skid Beam details, see "Skid Beam Details No. 1 thru 6" sheets.

ALL DIMENSIONS ARE IN MILLIMETERS UNLESS OTHERWISE SHOWN

SAN FRANCISCO OAKLAND BAY BRIDGE
EAST SPAN SEISMIC SAFETY PROJECT

EAST TIE-IN

SKID BENT SECTIONS NO. 1

DESIGN	BY	CHECKED
DETAILS	BY	CHECKED
QUANTITIES	BY	CHECKED

PREPARED FOR THE STATE OF CALIFORNIA DEPARTMENT OF TRANSPORTATION

PROJECT MANAGER

BRIDGE NO. 34-0006 (TEMP)
KILOMETER POST 12.6

DESIGN OVERSIGHT

SIGN OFF DATE

DESIGN DETAIL SHEET (METRIC) REV. 3/6/08
#DATE# #TIME# Pen Table File

ORIGINAL SCALE IN MILLIMETERS FOR REDUCED PLANS 0 10 20 30 40 50 60 70 80 90 100

CU
EA 0120R4

DISREGARD PRINTS BEARING EARLIER REVISION DATES

REVISION DATES (PRELIMINARY STAGE ONLY)

SHEET 119 OF 214

FILE => p:\BB\04-012001\ETI\Advance Procurement\agak25.dgn

USERNAME => ALee DATE PLOTTED => 12/17/2007 TIME PLOTTED => 4:43:26 PM FILE => p:\BB\04-012001\ETI\Advance Procurement\agak25.dgn

DIST	COUNTY	ROUTE	KILOMETER POST TOTAL PROJECT	SHEET No.	TOTAL
04	SF	80	12.6/13.2	118	214

Caltrans Metric

REGISTERED CIVIL ENGINEER

PLANS APPROVAL DATE

The State of California or its officers or agents shall not be responsible for the accuracy or completeness of electronic copies of this plan sheet.

REGISTERED PROFESSIONAL ENGINEER M E Ulitesiak No. C47977 Exp 12.31.09 CIVIL STATE OF CALIFORNIA

T.Y. LIN / MOFFATT & NICHOL
Two Harrison Street, Suite 500
San Francisco, CA 94105

CONTRACT NO. 04-0120R4

CONTRACT CHANGE ORDER NO 112

SHEET 25 OF 26

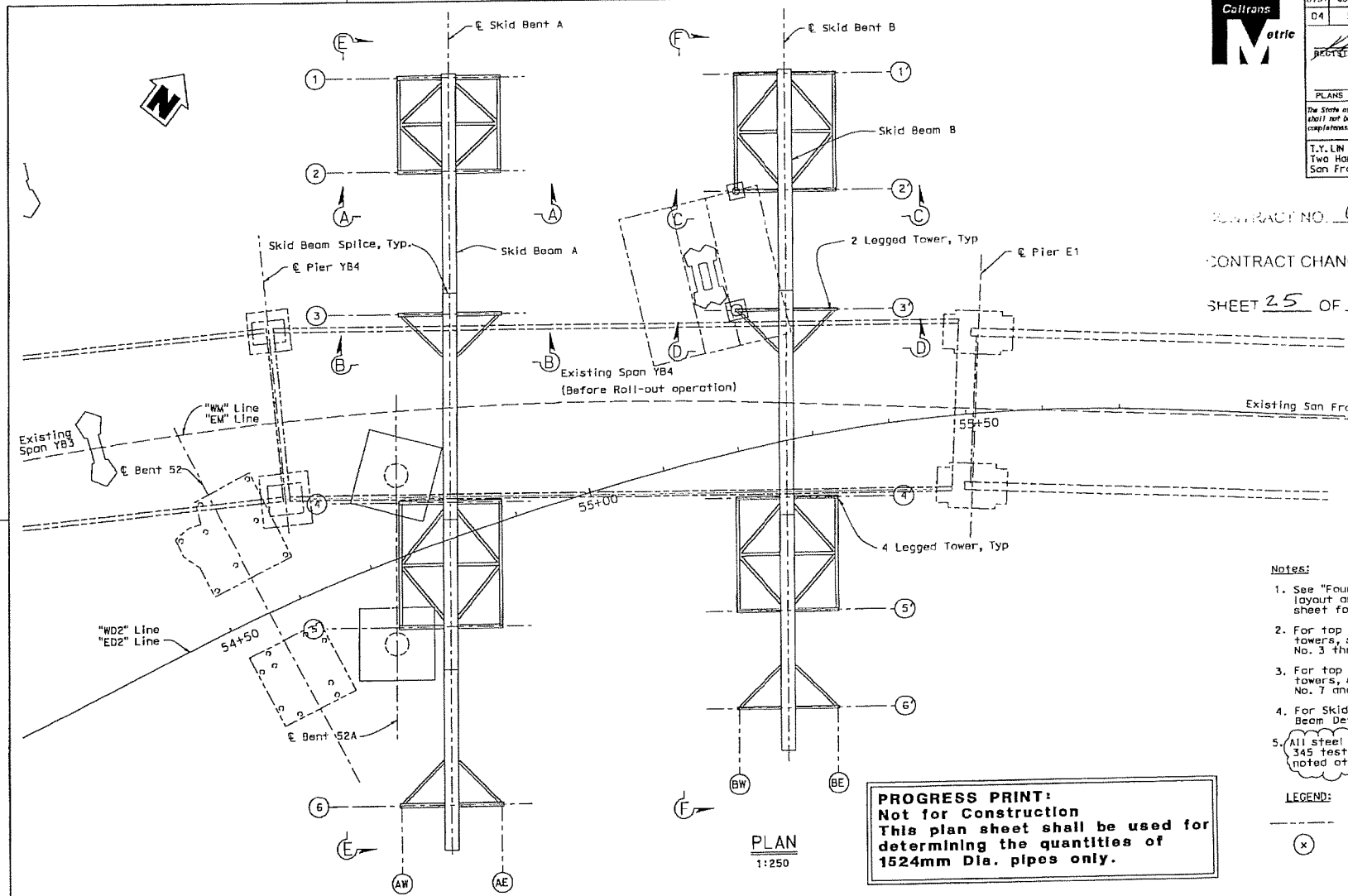

PLAN
1:250

PROGRESS PRINT:
Not for Construction
This plan sheet shall be used for determining the quantities of 1524mm Dia. pipes only.

Notes:

1. See "Foundation Plan" sheet for footing layout and see "Skid Bent Footing Details" sheet for footing sizes.
2. For top framing plan of 4 Legged towers, see "Skid Bent Details No. 3 thru 5" sheets.
3. For top framing plan of 2 Legged towers, see "Skid Bent Details No. 7 and 8" sheets.
4. For Skid Beam details, see "Skid Beam Details No. 1 thru 6" sheets.
5. All steel shall be AASHTO/ASTM A 709, Grade 345 tested to zone 2 requirements unless noted otherwise.

LEGEND:

- - - - - Indicates Existing Structure

(x) Indicates Grid Line

ALL DIMENSIONS ARE IN MILLIMETERS UNLESS OTHERWISE SHOWN

SAN FRANCISCO OAKLAND BAY BRIDGE
EAST SPAN SEISMIC SAFETY PROJECT

EAST TIE-IN

SKID BENT LAYOUT

PREPARED FOR THE STATE OF CALIFORNIA DEPARTMENT OF TRANSPORTATION

DESIGN OVERSIGHT

SIGN OFF DATE

DESIGN DETAIL SHEET (METRIC) REV. 3/4/99
$DATE$ $TIME$ Pen Table File

DESIGN BY CHECKED
DETAILS BY CHECKED
QUANTITIES BY CHECKED

ORIGINAL SCALE IN MILLIMETERS FOR REDUCED PLANS 0 10 20 30 40 50 60 70 80 90 100

PROJECT MANAGER

BRIDGE NO. 34-0006 (TEMP)
KILOMETER POST 12.6

CU
EA 0120R4

DISREGARD PRINTS BEARING EARLIER REVISION DATES

REVISION DATES (PRELIMINARY STAGE ONLY)

SHEET 118 OF 214

FILE => $REQUEST

USERNAME => $USER DATE PLOTTED => $DATE TIME PLOTTED => $TIME FILE => $REQUEST

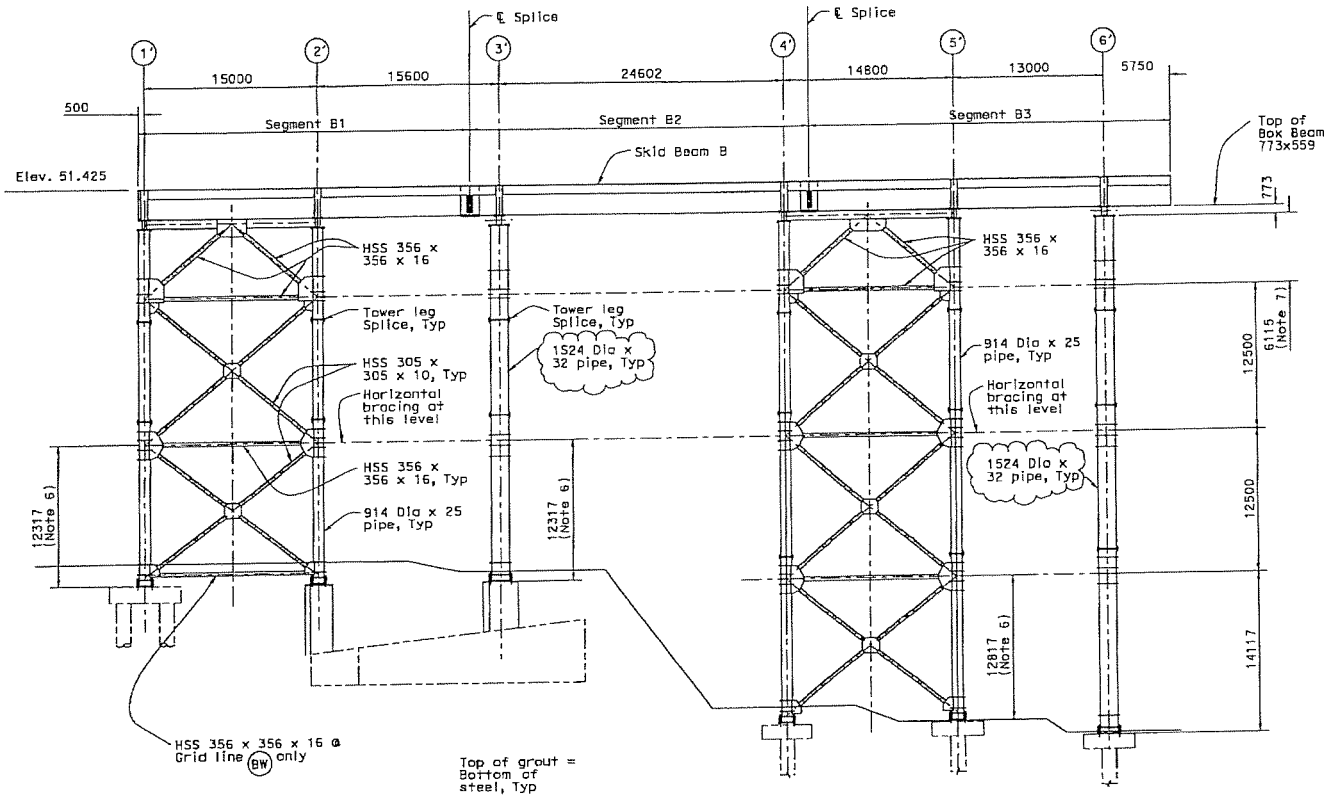

SECTION F-F

1:200

(Skid Bent B)

Grid BW shown

Grid BE similar

Caltrans Metric

DIST	COUNTY	ROUTE	KILOMETER POST TOTAL PROJECT	SHEET No	TOTAL
04	SF	80	12.6/13.2	121	214

REGISTERED CIVIL ENGINEER

PLANS APPROVAL DATE

The State of California or its officers or agents shall not be responsible for the accuracy or completeness of electronic copies of this plan sheet.

REGISTERED PROFESSIONAL ENGINEER M.E. Ulitesiak No. C47977 Exp. 12.31.06 CIVIL STATE OF CALIFORNIA

T.Y. LIN / MOFFATT & NICHOL
Two Harrison Street, Suite 500
San Francisco, CA 94105

CONTRACT NO. 04-0120R4

CONTRACT CHANGE ORDER NO 112

SHEET 26 OF 26

PROGRESS PRINT:
Not for Construction
This plan sheet shall be used for determining the quantities of 1524mm Dia. pipes only.

Notes:

1. All Structural plate interface connections shall be made with continuous complete joint penetration (CJP) welds, unless otherwise shown.
2. All frame bolts shall be 32 Dia A325, unless noted otherwise.
3. All tower leg splice connection bolts shall be A490 unless noted otherwise.
4. All diagonal bracings and horizontal strut connections are slip critical, unless noted otherwise.
5. For horizontal bracing details, see "Skid Bent Details No. 6" sheet.
6. Dimensions shown to bottom of steel base plate.
7. Dimensions shown to top of steel cap plate.

ALL DIMENSIONS ARE IN MILLIMETERS UNLESS OTHERWISE SHOWN

SAN FRANCISCO OAKLAND BAY BRIDGE
EAST SPAN SEISMIC SAFETY PROJECT

EAST TIE-IN

SKID BENT SECTIONS NO. 3

DESIGN OVERSIGHT

SIGN OFF DATE

DESIGN DETAIL SHEET MATERIAL (REV. 3/1/98)
DATE *TIME* Pen Table File

DESIGN BY CHECKED
DETAILS BY CHECKED
QUANTITIES BY CHECKED

PREPARED FOR THE STATE OF CALIFORNIA DEPARTMENT OF TRANSPORTATION

PROJECT MANAGER

BRIDGE NO. 34-0006 (TEMP)
KILOMETER POST 12.6

CU
EA 0120R4

DISREGARD PRINTS BEARING EARLIER REVISION DATES

REVISION DATES (PRELIMINARY STAGE ONLY)

SHEET 121 OF 214

ORIGINAL SCALE IN MILLIMETERS FOR REDUCED PLANS 0 10 20 30 40 50 60 70 80 90 100

FILE => p:\BB\04-012001\ETI\Advance Procurement\agsk23.dgn

USERNAME => ALee DATE PLOTTED => 12/17/2007 TIME PLOTTED => 4:42:57 PM FILE => p:\BB\04-012001\ETI\Advance Procurement\agsk23.dgn

STATE OF CALIFORNIA - DEPARTMENT OF TRANSPORTATION

CONTRACT CHANGE ORDER MEMORANDUM

DATE: 1/7/2008 RECEIVED 07143 MAR -4 08

TO: MIKE FORNER / DENNIS TURCHON	FILE: E.A. 04 - 0120R4
	CO-RTE-PM SF-80-12.6/13.2
FROM: BILL CASEY	FED. NO. ACBRIM-080-1(097)N
CCO#: 112 SUPPLEMENT#: 0 Category Code: CHPA	CONTINGENCY BALANCE (incl. this change) $120,752,774.41
COST: $2,000,000.00 INCREASE ☑ DECREASE ☐	HEADQUARTERS APPROVAL REQUIRED? ☑ YES ☐ NO
SUPPLEMENTAL FUNDS PROVIDED: $0.00	IS THIS REQUEST IN ACCORDANCE WITH ENVIRONMENTAL DOCUMENTS? ☑ YES ☐ NO
CCO DESCRIPTION: ETI Skidbent Material Procurement	**PROJECT DESCRIPTION:** CONSTRUCT ROUTE 80 TEMP BYPASS STRUCTURE

Original Contract Time:	Time Adj. This Change:	Previously Approved CCO Time Adjustments:	Percentage Time Adjusted: (including this change)	Total # of Unreconciled Deferred Time CCO(s): (including this change)
475 Day(s)	DEF Day(s)	1195 Day(s)	252 %	8

THIS CHANGE ORDER PROVIDES FOR:

The early procurement of long lead time steel pipe towers and anchor rods for the East Tie-In (ETI) structure in order to avoid potential delays to the contract completion.

This contract provides for the construction of a temporary detour for both eastbound and westbound I-80 traffic that allows for the tie in of the east span of the new San Francisco Oakland Bay Bridge (SFOBB) to Yerba Buena Island. The detour will allow for the construction of the permanent structure, the Yerba Buena Island Transition Structure (YBITS), which connects the signature Self Anchored Suspension (SAS) structure to Yerba Buena Island.

The detour consist of three main structures, the East Tie-In (ETI) to the bridge, the West Tie-In to the island and the Viaduct structure between the two tie ins. The contract was awarded as a performance based project with the contractor responsible for meeting the design criteria specified in the contract.

A December 14, 2006 Department strategy memorandum, approved by Tony Anziano, Toll Bridge Program Manager, and Richard Land, Chief Engineer, recommended that the Department assume the design responsibility for the East Tie-In (ETI) structure. Based on this memorandum, the design of the structure was changed from a design that incorporated the existing steel truss bridge to a design that replaces the steel truss bridge with a new structure (roll out / roll in).

The new ETI design requires the construction of 2 skid bents that allow for the roll out / roll in concept. The actual plans and specifications concerning these bents are currently being finalized and are expected to be completed by the Spring of 2008. This change order provides for the early procurement of the large diameter steel pipe towers and large diameter anchor rods that require significant lead times to furnish. These materials shall be procured prior to the completion of the final design in order to avoid delaying the fabrication of the skip bents which is currently a controlling operation on the project. A separate change order shall be issued to provide for the actual fabrication and construction of the skid bents once the plans are finalized.

Based on a CPM analysis of the project schedule, failure to provide for this early procurement could delay the completion of this contract and potential delay the entire SFOBB corridor.

This change order provides compensation for the procurement of the long lead time materials. Costs or credits associated with any salvage value or disposal cost associated with these temporary materials is deferred.

The work shall be performed as extra work at force account at an estimated cost of $2,000,000.00 and shall be financed from the contract's contingency funds. A cost analysis is on file.

This change was requested by Mike Whiteside, YBI Coordination Engineer, per Memorandum on December 21, 2007 and concurred by Alec Melkonians - Asst. Project Manager, Hong Wong - Project Engineer, and Robert Kobal - HQ Assistant Construction Coordinator.

Adjustment of contract time is deferred as the work may affect the controlling operation.

Maintenance concurrence is not required as this change order only acts to procure long lead time materials. Concurrence shall be obtained under the change order that provides for the construction of the ETI structure.

ADA Notice: For individuals with sensory disabilities, this document is available in alternate formats. For information call: (916) 654-6410 or TDD (916) 654-3880 or write Records and Forms Management, 1120 N Street, MS-89, Sacramento, CA 95814.

CONCURRED BY:			
Construction Engineer:		Date	
Bridge Engineer:	Mike Whiteside, Toll Bridge Design	Date	12/21/07
Project Engineer:	Hong Wong, PE	Date	1/8/08
Project Manager:	Alec Melkonians	Date	1/8/08
FHWA Rep.:		Date	
Environmental:		Date	
Other (specify):		Date	
Other (specify):	Robert Kobal, HQ Asst.Const.Coor	Date	1/8/08
District Prior Approval By:		Date	
HQ (Issue Approve) By:	Ken Darby, HQ CCO Engineer	Date	1-10-08
Resident Engineer's Signature:		Date	
			1-8-08

ESTIMATE OF COST

	THIS REQUEST	TOTAL TO DATE
ITEMS	$0.00	$0.00
FORCE ACCOUNT	$2,000,000.00	$2,000,000.00
AGREED PRICE	$0.00	$0.00
ADJUSTMENT	$0.00	$0.00
TOTAL	$2,000,000.00	$2,000,000.00

FEDERAL PARTICIPATION

☐ PARTICIPATING ☐ PARTICIPATING IN PART ☐ NONE
☐ NON-PARTICIPATING (MAINTENANCE) ☑ NON-PARTICIPATING

FEDERAL SEGREGATION (if more than one Funding Source or P.I.P. type)
☑ CCO FUNDED PER CONTRACT ☐ CCO FUNDED AS FOLLOWS

FEDERAL FUNDING SOURCE	PERCENT

ADA Notice: For individuals with sensory disabilities, this document is available in alternate formats. For information call: (916) 654-6410 or TDD (916) 654-3880 or write Records and Forms Management, 1120 N Street, MS-89, Sacramento, CA 95814.

STATE OF CALIFORNIA - DEPARTMENT OF TRANSPORTATION

CONTRACT CHANGE ORDER

Change Requested by: Engineer

CCO 112	Suppl. No. 1	Contract No. 04 - 0120R4	Road SF-80-12.6/13.2	FED. AID LOC.: ACBRIM-080-1(097)N

To: CC MYERS INC

You are directed to make the following changes from the plans and specifications or do the following described work not included in the plans and specifications for this contract. ***NOTE: This change order is not effective until approved by the Engineer.***

Description of work to be done, estimate of quantities and prices to be paid. (Segregate between additional work at contract price, agreed price and force account.) Unless otherwise stated, rates for rental of equipment cover only such time as equipment is actually used and no allowance will be made for idle time. This last percentage shown is the net accumulated increase or decrease from the original quantity in the Engineer's Estimate.

Extra Work at Force Account:

Procure materials required for the fabrication of the skid bent, skid beam, and truss portions of the East Tie-In (ETI) structure of the Temporary Bypass Structure (Bridge No. 34-0006 (TEMP) as determined by the Engineer. All procurements made under this change order shall be authorized by the Engineer prior to the actual ordering of materials.

Any salvage value or disposal costs associated with the materials procured under this change order are deferred.

Costs associated with the actual fabrication work concerning the ETI structure are not covered under this change order and shall be paid separately.

Costs associated with the material procurement and construction of the skid bent foundations (footings, piles and structure excavation) and Bent 52A are excluded from this change order.

Estimated Cost of Extra Work at Force Account $8,500,000.00

07261 MAR 25 08 RECEIVED

Estimated Cost: **Increase** ☑ **Decrease** ☐ **$8,500,000.00**

By reason of this order the time of completion will be adjusted as follows: Deferred

Submitted by

Signature	Resident Engineer	Date
	BILL CASEY	2-22-08

Approval Recommended by

Signature	SFOBB Construction Manager	Date
Mike Forner	MIKE FORNER	2-25-08

Engineer Approval by

Signature	SFOBB Construction Manager	Date
Mike Forner	MIKE FORNER	3-17-08

We the undersigned contractor, have given careful consideration to the change proposed and agree, if this proposal is approved, that we will provide all equipment, furnish the materials, except as may otherwise be noted above, and perform all services necessary for the work above specified, and will accept as full payment therefor the prices shown above.

NOTE: If you, the contractor, do not sign acceptance of this order, your attention is directed to the requirements of the specifications as to proceeding with the ordered work and filing a written protest within the time therein specified.

Contractor Acceptance by

Signature	(Print name and title)	Date
D E Himick	DANIEL E. HIMICK, PRESIDENT	3/10/08

STATE OF CALIFORNIA - DEPARTMENT OF TRANSPORTATION

CONTRACT CHANGE ORDER MEMORANDUM

TO: MIKE FORNER / DENNIS TURCHON	FILE: E.A. 04 - 0120R4
	CO-RTE-PM SF-80-12.6/13.2
FROM: BILL CASEY	FED. NO. ACBRIM-080-1(097)N
CCO#: **112** SUPPLEMENT#: **1** Category Code: **CHPA**	CONTINGENCY BALANCE (incl. this change) **$76,142,996.82**
COST: **$8,500,000.00** INCREASE ☑ DECREASE ☐	HEADQUARTERS APPROVAL REQUIRED? ☑ YES ☐ NO
SUPPLEMENTAL FUNDS PROVIDED: **$0.00**	IS THIS REQUEST IN ACCORDANCE WITH ENVIRONMENTAL DOCUMENTS? ☑ YES ☐ NO
CCO DESCRIPTION: Material Procurement ETI Superstructure	**PROJECT DESCRIPTION:** CONSTRUCT ROUTE 80 TEMP BYPASS STRUCTURE

Original Contract Time:	Time Adj. This Change:	Previously Approved CCO Time Adjustments:	Percentage Time Adjusted: (including this change)	Total # of Unreconciled Deferred Time CCO(s): (including this change)
475 Day(s)	**DEF** Day(s)	**1195** Day(s)	**252** %	**8**

THIS CHANGE ORDER PROVIDES FOR:

The procurement of materials for the East Tie-In (ETI) structure in order to advance the contract schedule.

This contract provides for the construction of a temporary detour for both eastbound and westbound I-80 traffic that allows for the tie in of the east span of the new San Francisco Oakland Bay Bridge (SFOBB) to Yerba Buena Island. The detour will allow for the construction of the permanent structure, the Yerba Buena Island Transition Structure, which connects the signature SAS structure to Yerba Buena Island.

The detour consist of three main structures, the East Tie-In (ETI) to the bridge, the West Tie-In to the island and the viaduct structure between the two tie ins. The contract was awarded as a performance based project with the contractor responsible for meeting the design criteria specified in the contract.

A December 14, 2006 Department strategy memorandum, approved by Tony Anziano, Toll Bridge Program Manager, and Richard Land, Chief Engineer and subsequently the TBPOC, recommended that the Department assume the design responsibility for the East Tie-In (ETI) structure. Based on this memorandum, the design of the structure was changed from a design that incorporated the existing steel truss bridge span with the new structure to a design that completely replaces the existing span with a new structure (roll out / roll in).

The construction of the ETI is currently the controlling operation on both this project and the corridor wide opportunity schedule for the SFOBB. In order to expedite the fabrication work, the original Change Order No. 112 provided for the early procurement of long lead time materials. This change provides for the procurement of the remaining materials required for the structures fabrication comprised of an estimated 4,300 metric tons of steel.

It is anticipated that the material order will be made in stages for the skid bent, skid beam and truss sections of the structure based upon the delivery of the design for these items of work. In order to advance this work and mitigate further delays to the project, the Department shall authorize the order of materials based on a risk assessment made for the various materials involved.

Costs or credits associated with any salvage value or disposal cost associated with these temporary materials is deferred.

The work shall be performed as extra work at force account at an estimated cost of $8,500,000.00 and shall be financed from the contract's contingency funds. A cost analysis is on file.

This change has been concurred by Mike Whiteside, YBI Coordination Engineer, per Memorandum dated 2/15/2008 and concurred by Alec Melkonians - Asst. Project Manager.

Adjustment of contract time is deferred as the work may affect the controlling operation.

Maintenance concurrence is not required as this change order only acts to procure materials only. Concurrence shall be obtained under the change order that provides for the construction of the ETI structure.

ADA Notice: For individuals with sensory disabilities, this document is available in alternate formats. For information call: (916) 654-6410 or TDD (916) 654-3880 or write

CONCURRED BY:			
Construction Engineer:		Date	
Bridge Engineer:	Mike Whiteside, Toll Bridge Design	Date	2/15/08
Project Engineer:	HONG WONG	Date	3/3/08
Project Manager:	Alec Melkonians	Date	2/21/08
FHWA Rep.:		Date	
Environmental:		Date	
Other (specify):	Robert Kobal, HQ Asst.Const.Coor	Date	
Other (specify):		Date	
District Prior Approval By:		Date	
HQ (Issue Approve) By:	Ken Darby, HQ CCO Engineer	Date	
Resident Engineer's Signature:		Date	2-22-08

ESTIMATE OF COST

	THIS REQUEST	TOTAL TO DATE
ITEMS	$0.00	$0.00
FORCE ACCOUNT	$8,500,000.00	$10,500,000.00
AGREED PRICE	$0.00	$0.00
ADJUSTMENT	$0.00	$0.00
TOTAL	$8,500,000.00	$10,500,000.00

FEDERAL PARTICIPATION

☐ PARTICIPATING ☐ PARTICIPATING IN PART ☐ NONE
☐ NON-PARTICIPATING (MAINTENANCE) ☑ NON-PARTICIPATING

FEDERAL SEGREGATION (if more than one Funding Source or P.I.P. type)
☑ CCO FUNDED PER CONTRACT ☐ CCO FUNDED AS FOLLOWS

FEDERAL FUNDING SOURCE	PERCENT

ADA Notice: For individuals with sensory disabilities, this document is available in alternate formats. For information call: (916) 654-6410 or TDD (916) 654-3880 or write

CONTRACT CHANGE ORDER

Change Requested by: Engineer

CCO 112	Suppl. No. 2	Contract No. 04 - 0120R4	Road SF-80-12.6/13.2	FED. AID LOC.: ACBRIM-080-1(097)N

To: CC MYERS INC

You are directed to make the following changes from the plans and specifications or do the following described work not included in the plans and specifications for this contract. ***NOTE: This change order is not effective until approved by the Engineer.***

Description of work to be done, estimate of quantities and prices to be paid. (Segregate between additional work at contract price, agreed price and force account.) Unless otherwise stated, rates for rental of equipment cover only such time as equipment is actually used and no allowance will be made for idle time. This last percentage shown is the net accumulated increase or decrease from the original quantity in the Engineer's Estimate.

Extra Work at Force Account:

Provide additional funds.

Estimated cost of Extra Work at Force Account $3,500,000.00

Estimated Cost: **Increase** ☑ **Decrease** ☐ **$3,500,000.00**

By reason of this order the time of completion will be adjusted as follows: Deferred

Submitted by

Signature	Resident Engineer	Date
	BILL CASEY	5-27-08

Approval Recommended by

Signature	SFOBB Construction Manager	Date
Michael Forner	MIKE FORNER	6-2-08

Engineer Approval by

Signature	SFOBB Construction Manager	Date
DENNIS TURCHIN	for: MIKE FORNER	6/18/08

We the undersigned contractor, have given careful consideration to the change proposed and agree, if this proposal is approved, that we will provide all equipment, furnish the materials, except as may otherwise be noted above, and perform all services necessary for the work above specified, and will accept as full payment therefor the prices shown above.

NOTE: If you, the contractor, do not sign acceptance of this order, your attention is directed to the requirements of the specifications as to proceeding with the ordered work and filing a written protest within the time therein specified.

Contractor Acceptance by

Signature	(Print name and title)	Date
NOT APPLICABLE	N/A	

STATE OF CALIFORNIA - DEPARTMENT OF TRANSPORTATION

CONTRACT CHANGE ORDER

Change Requested by: Engineer

CCO 112	Suppl. No. 3	Contract No. 04 - 0120R4	Road SF-80-12.6/13.2	FED. AID LOC.: ACBRIM-080-1(097)N

To: CC MYERS INC

You are directed to make the following changes from the plans and specifications or do the following described work not included in the plans and specifications for this contract. ***NOTE: This change order is not effective until approved by the Engineer.***

Description of work to be done, estimate of quantities and prices to be paid. (Segregate between additional work at contract price, agreed price and force account.) Unless otherwise stated, rates for rental of equipment cover only such time as equipment is actually used and no allowance will be made for idle time. This last percentage shown is the net accumulated increase or decrease from the original quantity in the Engineer's Estimate.

Extra Work at Force Account:

Procure the following materials required for the East Tie-In (ETI) structure of the Temporary Bypass Structure (Bridge No. 34-0006 (TEMP)) as determined by the Engineer.

1) Procure all steel bolts required for the erection of the skid bent system and truss.

2) Procure all steel plate required for the retrofit of the existing structure.

All procurements made under this change order shall be authorized by the Engineer prior to the actual ordering of materials

Any salvage value or disposal costs associated with the materials procured under this change order are deferred.

Consideration of a time adjustment will be deferred until completion of the work specified herein. Determination of a commensurate time extension will be made in accordance with Section 8-1.07, "Liquidated Damages", of the Standard Specifications and Section 10-1.20 "Time Related Overhead (TRO)" of the Special Provisions.

Compensation for delays resulting from this work will be made in accordance with Section 8-1.09 "Right of Way Delays" of the Standard Specifications and Section 10-1.20 "Time Related Overhead" of the Special Provisions.

Estimated Cost of Extra Work at Force Account $3,000,000.00

Estimated Cost: Increase ☑ Decrease ☐ **$3,000,000.00**

By reason of this order the time of completion will be adjusted as follows: Deferred

Submitted by

Signature	Resident Engineer	Date
	BILL CASEY	10-27-08

Approval Recommended by

Signature	SFOBB Construction Manager	Date
P Siegenthaler	PETER SIEGENTHALER	10/28/08

Engineer Approval by

Signature	SFOBB Construction Manager	Date
P Siegenthaler	PETER SIEGENTHALER	11/13/08

We the undersigned contractor, have given careful consideration to the change proposed and agree, if this proposal is approved, that we will provide all equipment, furnish the materials, except as may otherwise be noted above, and perform all services necessary for the work above specified, and will accept as full payment therefor the prices shown above.

NOTE: If you, the contractor, do not sign acceptance of this order, your attention is directed to the requirements of the specifications as to proceeding with the ordered work and filing a written protest within the time therein specified.

Contractor Acceptance by

Signature	(Print name and title)	Date
NOT APPLICABLE		

STATE OF CALIFORNIA - DEPARTMENT OF TRANSPORTATION

CONTRACT CHANGE ORDER

Change Requested by: Engineer

CCO 112	Suppl. No. 4	Contract No. 04 - 0120R4	Road SF-80-12.6/13.2	FED. AID LOC.: ACBRIM-080-1(097)N

To: **CC MYERS INC**

You are directed to make the following changes from the plans and specifications or do the following described work not included in the plans and specifications for this contract. ***NOTE: This change order is not effective until approved by the Engineer.***

Description of work to be done, estimate of quantities and prices to be paid. (Segregate between additional work at contract price, agreed price and force account.) Unless otherwise stated, rates for rental of equipment cover only such time as equipment is actually used and no allowance will be made for idle time. This last percentage shown is the net accumulated increase or decrease from the original quantity in the Engineer's Estimate.

Extra Work at Force Account:

Provide additional funds to procure materials required for the East Tie-In (ETI) structure of the Temporary Bypass Structure (Bridge No. 34-0006 (TEMP)) as authorized by the Engineer.

Estimated cost of Extra Work at Force Account $1,500,000.00

RECEIVED
011032 SEP 23 09

Estimated Cost: Increase ☑ Decrease ☐ **$1,500,000.00**

By reason of this order the time of completion will be adjusted as follows: Deferred

Submitted by:		
Signature	**Resident Engineer** BILL CASEY	**Date** 7-2-09
Approval Recommended by:		
Signature Mike Forner	**SFOBB Construction Manager** MIKE FORNER	**Date** 7-6-09
Engineer Approval by:		
Signature Mike Forner	**SFOBB Construction Manager** MIKE FORNER	**Date** 7-15-09

We the undersigned contractor, have given careful consideration to the change proposed and agree, if this proposal is approved, that we will provide all equipment, furnish the materials, except as may otherwise be noted above, and perform all services necessary for the work above specified, and will accept as full payment therefor the prices shown above.

NOTE: If you, the contractor, do not sign acceptance of this order, your attention is directed to the requirements of the specifications as to proceeding with the ordered work and filing a written protest within the time therein specified.

Contractor Acceptance by:		
Signature N/A	**(Print name and title)** N/A	**Date** N/A

STATE OF CALIFORNIA - DEPARTMENT OF TRANSPORTATION

CONTRACT CHANGE ORDER MEMORANDUM

TO: MIKE FORNER / DEANNA VILCHECK

FROM: BILL CASEY

FILE: E.A. 04 - 0120R4
CO-RTE-PM SF-80-12.6/13.2
FED. NO. ACBRIM-080-1(097)N

CCO#: 112 SUPPLEMENT#: 4 Category Code: CHPA

CONTINGENCY BALANCE (incl. this change) $45,918,940.59

COST: $1,500,000.00 INCREASE ✓ DECREASE

HEADQUARTERS APPROVAL REQUIRED? ✓ YES NO

SUPPLEMENTAL FUNDS PROVIDED: $0.00

IS THIS REQUEST IN ACCORDANCE WITH ENVIRONMENTAL DOCUMENTS? ✓ YES NO

CCO DESCRIPTION:
Add Funds Material Procurement ETI

PROJECT DESCRIPTION:
CONSTRUCT ROUTE 80 TEMP BYPASS STRUCTURE

Original Contract Time:	Time Adj. This Change:	Previously Approved CCO Time Adjustments:	Percentage Time Adjusted: (including this change)	Total # of Unreconciled Deferred Time CCO(s): (including this change)
475 Day(s)	DEF Day(s)	1195 Day(s)	252 %	8

THIS CHANGE ORDER PROVIDES FOR:

additional funds for the procurement of materials for the East Tie-In (ETI) structure.

This contract calls for the construction of a temporary detour for both eastbound and westbound I-80 traffic that allows for the tie in of the east span of the new San Francisco Oakland Bay Bridge (SFOBB) to Yerba Buena Island. The detour consist of three main structures, the east tie in (ETI) to the bridge, the west tie in (WTI) to the island and the viaduct structure between the two tie ins.

The original contract was awarded as a performance-based contract with the Contractor responsible for the design of the structures based upon meeting specified design criteria. The Department issued a December 14, 2006 memo entitled Strategy for South-South Detour Contract Completion which was approved by Tony Anziano (Toll Bridge Program Manager), Richard Land (Chief Engineer) and subsequently by the TBPOC. This memo recommended that the design of the ETI structure be assumed by the Department as opposed to the as-bid performance based contractor design.

The original change order, along with Supplement No. 1, Supplement No. 2 and Supplement No. 3, provided for the advance procurement of raw steel for the fabrication of the ETI truss and skid bent system at an estimated cost of $17,000,000.

It is now anticipated that additional funding of $1,500,000.00 shall be required to complete the procurement of all materials. The cost for the procurement of the approximately 40,000 bolts and fasteners on the truss and skid bent was significantly underestimated under Supplement No. 3 of this change order and continued steel surcharges applied by the steel mills have depleted the existing funding.

The work shall be performed as extra work at force account at an estimated cost of $1,500,000.00 and shall be financed from the contract's contingency funds. A cost analysis is on file.

Adjustment of contract time is deferred pending completion of the work specified in this change as it may become the controlling operation in accordance with Section 8-1.07 "Liquidated Damages", of the Standard Specifications and Section 10-1.20 "Time Related Overhead (TRO)" of the Special Provisions.

Compensation for delays resulting from this work will be made in accordance with Section 8-1.09 "Right of Way Delays" of the Standard Specifications and Section 10-1.20 "Time Related Overhead" of the Special Provisions.

This change has been concurred with by Alec Melkonians - Asst. Project Manager and Hong Wong - Project Engineer. TBPOC Approval granted on July 15, 2009.

Maintenance concurrence is not required as this change order only acts to procure materials. Concurrence for the construction of the ETI structures shall be obtained under the change order that provides for the construction of that structure.

FHWA concurrence is not required as they are no longer providing funds for this project.

The Contractor's signature is not required for additional funds of Extra Work at Force Account change orders. Therefore this change order is being issued unilaterally.

ADA Notice: For individuals with sensory disabilities, this document is available in alternate formats. For information call: (916) 654-6410 or TDD (916) 654-3880 or write Records and Forms Management, 1120 N Street, MS-89, Sacramento, CA 95814.

CONCURRED BY:		
Construction Engineer:	Bill Casey, Resident Engineer	Date 7-2-09
Bridge Engineer:		Date
Project Engineer:	Hong Wong, PE	Date 7-15-09
Project Manager:	Alec Melkonians	Date 7-15-09
FHWA Rep.:		Date
Environmental:		Date
Other (specify):		Date
Other (specify):		Date
District Prior Approval By:		Date
HQ (Issue Approve) By:	Bob Molera, HQ CCO Engineer	Date 7-7-09
Resident Engineer's Signature:		Date
		7-2-09

ESTIMATE OF COST

	THIS REQUEST	TOTAL TO DATE
ITEMS	$0.00	$0.00
FORCE ACCOUNT	$1,500,000.00	$18,500,000.00
AGREED PRICE	$0.00	$0.00
ADJUSTMENT	$0.00	$0.00
TOTAL	$1,500,000.00	$18,500,000.00

FEDERAL PARTICIPATION

☐ PARTICIPATING ☐ PARTICIPATING IN PART ☑ NONE
☐ NON-PARTICIPATING (MAINTENANCE) ☐ NON-PARTICIPATING

FEDERAL SEGREGATION (if more than one Funding Source or P.I.P. type)
☐ CCO FUNDED PER CONTRACT ☐ CCO FUNDED AS FOLLOWS

FEDERAL FUNDING SOURCE	PERCENT

ADA Notice: For individuals with sensory disabilities, this document is available in alternate formats. For information call: (916) 654-6410 or TDD (916) 654-3880 or write Records and Forms Management, 1120 N Street, MS-89, Sacramento, CA 95814.

CONTRACT CHANGE ORDER

Change Requested by: Engineer

CCO 113	Suppl. No. 0	Contract No. 04 - 0120R4	Road SF-80-12.6/13.2	FED. AID LOC.: ACBRIM-080-1(097)N

To: **CC MYERS INC**

You are directed to make the following changes from the plans and specifications or do the following described work not included in the plans and specifications for this contract. ***NOTE: This change order is not effective until approved by the Engineer.***

Description of work to be done, estimate of quantities and prices to be paid. (Segregate between additional work at contract price, agreed price and force account.) Unless otherwise stated, rates for rental of equipment cover only such time as equipment is actually used and no allowance will be made for idle time. This last percentage shown is the net accumulated increase or decrease from the original quantity in the Engineer's Estimate.

Extra Work at Lump Sum:

Install underground water lines as shown on attached Sheets 3 and 4 of this contract change order.

Water line construction will be done in accordance with the standard specifications and plans for Ductile Iron Water Mains from the San Francisco Water Department. Contractor will provide and install all pipeline materials, including pipe, fittings, approved joint restraining measures, thrust blocks, and polyethelene encasement tube, to the satisfication of the San Francisco Water Department. Contractor will conduct all required pressure tests, chlorination and bacterial tests, and complete connections to the existing water lines and hydrants to the satisfication of the San Francisco Water Department inspector.

The contractor shall conduct exploratory excavations at existing utilities as required, or directed by the Engineer, to locate any potential conflicts and re-rout the new line as required to avoid interferences.

In all paved or concrete areas, the contractor is to replace any damaged or removed pavement and base material with an equal or greater section thickness. A neat line sawcut is required at the edges of all pavement or concrete removal and replacement.

Contractor will provide all necessary measures, including but not limited to: flaggers, temporary plates, temporary asphalt, and alternate access roads for vehicles and equipment to reach the W2 work site without disruption.

This change order price includes full compensation for any required testing and legal disposal of excavated spoils and debris materials generated during the work. This change order does not include removal or asbestos or hazardous substances. If any asbestos or hazardous substances are encountered, the Contractor shall conform to the provisions of Special Provision section 5-1.06, "REMOVAL OF ASBESTOS AND HAZARDOUS SUBSTANCES".

This change order price includes full compensation for the contractor to maintain all existing water pollution control measures, and no additional compensation or additional contract unit price payments will be made to maintain or replace items that are required or disturbed as a result of this change order work.

For this work, the Contractor will be compensated a lump sum of $167,990.00. This lump sum constitutes full compensation, including all markups, for furnishing all labor, material, tools, equipment, and incidentals for doing the work involved in this change.

Total Cost of Extra Work at Lump Sum $167,990.00

CONTRACT CHANGE ORDER

Change Requested by: Engineer

CCO 113	Suppl. No. 0	Contract No. 04 - 0120R4	Road SF-80-12.6/13.2	FED. AID LOC.: ACBRIM-080-1(097)N

Estimated Cost: Increase ☑ Decrease ☐ **$167,990.00**

By reason of this order the time of completion will be adjusted as follows: Deferred

Submitted by

Signature	Resident Engineer	Date
	BILL CASEY	1-29-08

Approval Recommended by

Signature	Area Construction Manager	Date
	DENNIS TURCHON	1/29/08

Engineer Approval by

Signature	Area Construction Manager	Date
	DENNIS TURCHON	

We the undersigned contractor, have given careful consideration to the change proposed and agree, if this proposal is approved, that we will provide all equipment, furnish the materials, except as may otherwise be noted above, and perform all services necessary for the work above specified, and will accept as full payment therefor the prices shown above.

NOTE: If you, the contractor, do not sign acceptance of this order, your attention is directed to the requirements of the specifications as to proceeding with the ordered work and filing a written protest within the time therein specified.

Contractor Acceptance by

Signature	(Print name and title)	Date
	DANIEL E. Hamick, President	3/13/08

012OR4

TEMPORARY WATER FOR SAS CONTRACTOR

TBD CCO RECOMMENDATION
YBI - MACALLA ROAD
TRINH LAI

12/14/07

REGISTERED PROFESSIONAL ENGINEER
TRINH T. LAI
C 63630
EXP 9/30/08
CIVIL
STATE OF CALIFORNIA

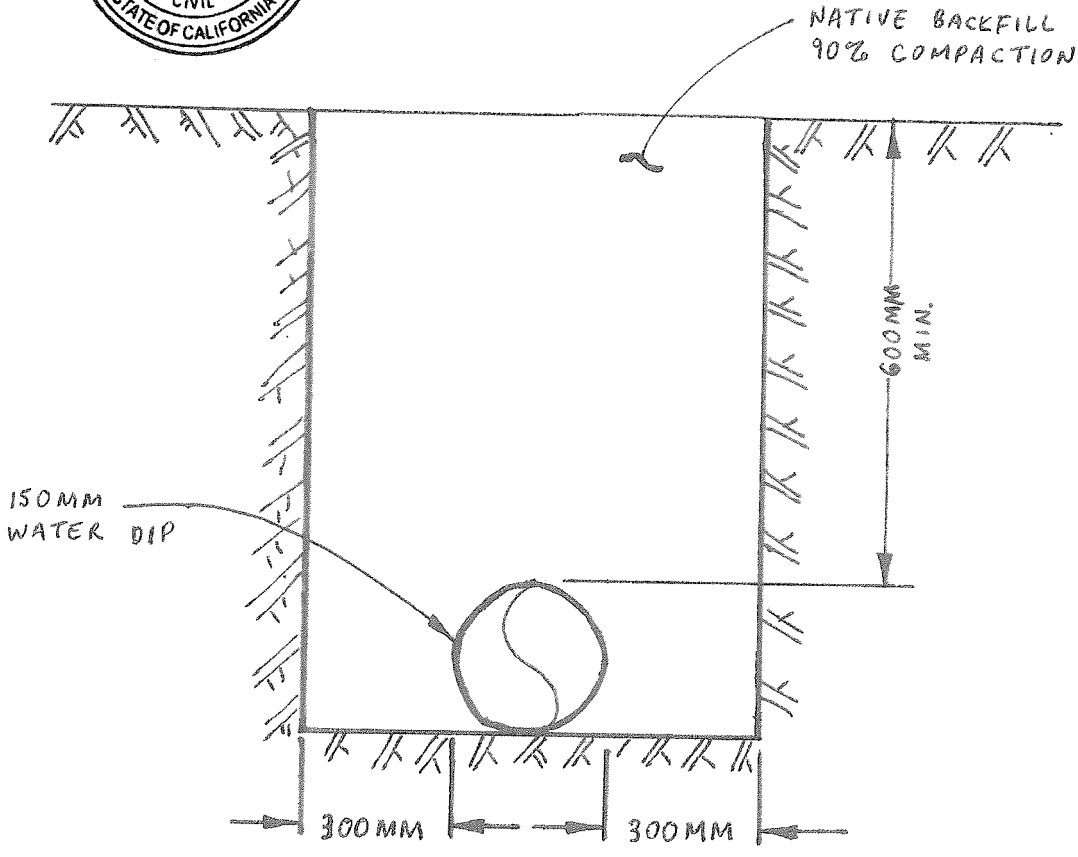

TYPICAL TRENCH DETAIL

NO SCALE

CONTRACT NO. 04-0120R4

CONTRACT CHANGE ORDER NO 113

SHEET 3 OF 4

TEMPORARY WATER SUPPLY FOR SAS

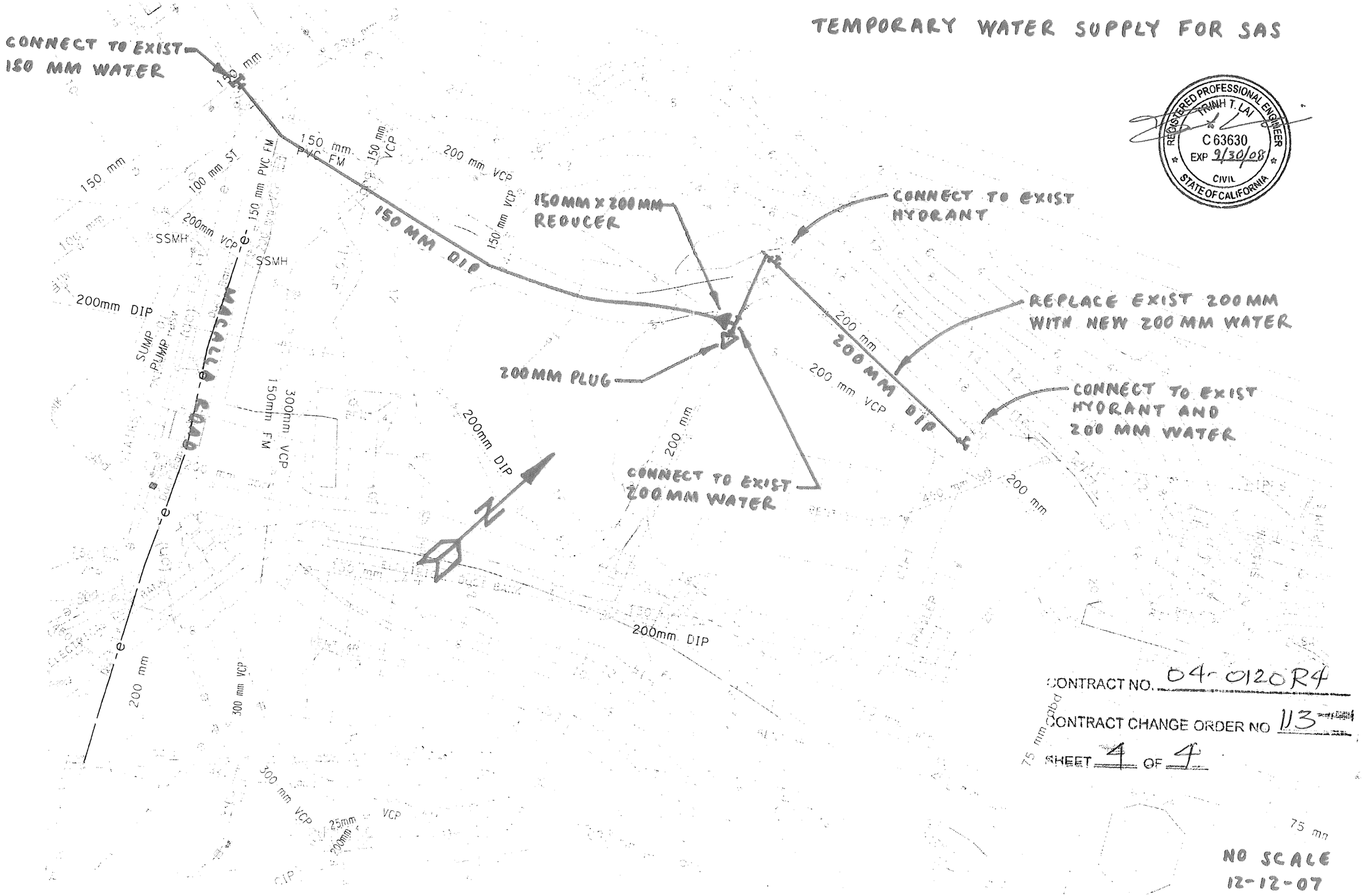

REGISTERED PROFESSIONAL ENGINEER
TRINH T. LAI
C 63630
EXP 9/30/08
CIVIL
STATE OF CALIFORNIA

CONTRACT NO. 04-0120R4

CONTRACT CHANGE ORDER NO 113

SHEET 4 OF 4

NO SCALE
12-12-07

STATE OF CALIFORNIA - DEPARTMENT OF TRANSPORTATION

CONTRACT CHANGE ORDER MEMORANDUM

RECEIVED
DATE: 1/22/2008

TO: MIKE FORNER / DENNIS TURCHON	FILE: E.A. 04 - 0120R4 007642 JUN 20 08 CO-RTE-PM SF-80-12.6/13.2 FED. NO. ACBRIM-080-1(097)N
FROM: BILL CASEY	
CCO#: **113** SUPPLEMENT#: **0** Category Code: **CLTC**	CONTINGENCY BALANCE (incl. this change) **$89,927,792.86**
COST: **$167,990.00** INCREASE ☑ DECREASE ☐	HEADQUARTERS APPROVAL REQUIRED? ☐ YES ☑ NO
SUPPLEMENTAL FUNDS PROVIDED: **$0.00**	IS THIS REQUEST IN ACCORDANCE WITH ENVIRONMENTAL DOCUMENTS? ☑ YES ☐ NO
CCO DESCRIPTION: Waterline Relocation at W3	**PROJECT DESCRIPTION:** CONSTRUCT ROUTE 80 TEMP BYPASS STRUCTURE

Original Contract Time:	Time Adj. This Change:	Previously Approved CCO Time Adjustments:	Percentage Time Adjusted: (including this change)	Total # of Unreconciled Deferred Time CCO(s): (including this change)
475 Day(s)	**DEF** Day(s)	**1195** Day(s)	**252** %	**8**

THIS CHANGE ORDER PROVIDES FOR:

The construction of water supply lines in accordance with Sheets 3 through 4 of this change order.

This contract provides for the construction of a temporary detour for both eastbound and westbound I-80 traffic that allows for the tie in of the east span of the new San Francisco Oakland Bay Bridge (SFOBB) to Yerba Buena Island (YBI). A December 14, 2006 Department strategy memorandum, approved by Tony Anziano, Toll Bridge Program Manager, and Richard Land, Chief Engineer, recommended that the Department assume the design responsibility for the East Tie-In (ETI) structure. Based on this memorandum, the design of the structure was changed from a design that incorporated the existing steel truss bridge with the new structure to a design that replaces the existing structure with a new structure (roll-out / roll-in). As a consequence of the change, the existing water supply lines on Yerba Buena Island which service two fire hydrants in the vicinity of Piers W3 and W2 are in conflict with the skid bent foundations of the East Tie-In (ETI) roll-out / roll-in design. San Francisco Water Department (SFWD) owns and maintains the water supply lines.

The water hydrants are the primary source of construction water for work on the pier W2 bent cap, which is currently underway as part of the Self Anchored Suspension Superstructure contract (04-0120C4). In order to maintain a continuous water supply while resolving the conflict, the Department has developed plans and specifications to construct new temporary water lines. Although these lines are considered temporary, the materials used and specifications followed are the standard SFWD underground water line details. SFWD has reviewed and agreed to this design.

This contract change order provides for the completion of the work involved, including installation of new underground water lines and connection of these lines to the existing system and hydrants.

The completed temporary lines will be turned over to SFWD. During the future YBI Transition Span work, permanent lines are anticipated to be designed and installed to replace these temporary lines.

For this work the Contractor will be compensated at the agreed lump sum of $167,990.00, which will be financed from the contract's contingency funds. A cost analysis is on file.

Any time adjustments relating to this work will be deferred as it may impact the controlling operation.

Maintenance concurrence is not required as the SFWD will maintain this facility.

This change was cocurred by Alec Melkonians - Asst. Project Manager and Hong Wong - Project Engineer.

ADA Notice: For individuals with sensory disabilities, this document is available in alternate formats. For information call: (916) 654-6410 or TDD (916) 654-3880 or write Records and Forms Management, 1120 N Street, MS-89, Sacramento, CA 95814.

CONCURRED BY:			
Construction Engineer:		Date	
Bridge Engineer:		Date	
Project Engineer:	Hong Wong, PE	Date	1/28/08
Project Manager:	Alec Melkonians	Date	1/28/08
FHWA Rep.:		Date	
Environmental:		Date	
Other (specify):		Date	
Other (specify):		Date	
District Prior Approval By:		Date	
HQ (Issue Approve) By:		Date	
Resident Engineer's Signature:		Date	
		1-29-08	

ESTIMATE OF COST

	THIS REQUEST	TOTAL TO DATE
ITEMS	$0.00	$0.00
FORCE ACCOUNT	$0.00	$0.00
AGREED PRICE	$167,990.00	$167,990.00
ADJUSTMENT	$0.00	$0.00
TOTAL	$167,990.00	$167,990.00

FEDERAL PARTICIPATION

☐ PARTICIPATING ☐ PARTICIPATING IN PART ☐ NONE
☐ NON-PARTICIPATING (MAINTENANCE) ☑ NON-PARTICIPATING

FEDERAL SEGREGATION (if more than one Funding Source or P.I.P. type)
☑ CCO FUNDED PER CONTRACT ☐ CCO FUNDED AS FOLLOWS

FEDERAL FUNDING SOURCE	PERCENT

ADA Notice: For individuals with sensory disabilities, this document is available in alternate formats. For information call: (916) 654-6410 or TDD (916) 654-3880 or write Records and Forms Management, 1120 N Street, MS-89, Sacramento, CA 95814.

STATE OF CALIFORNIA - DEPARTMENT OF TRANSPORTATION

CONTRACT CHANGE ORDER

Change Requested by: Engineer

CCO 114	Suppl. No. 0	Contract No. 04 - 0120R4	Road SF-80-12.6/13.2	FED. AID LOC.:

To: **CC MYERS INC**

You are directed to make the following changes from the plans and specifications or do the following described work not included in the plans and specifications for this contract. ***NOTE: This change order is not effective until approved by the Engineer.***

Description of work to be done, estimate of quantities and prices to be paid. (Segregate between additional work at contract price, agreed price and force account.) Unless otherwise stated, rates for rental of equipment cover only such time as equipment is actually used and no allowance will be made for idle time. This last percentage shown is the net accumulated increase or decrease from the original quantity in the Engineer's Estimate.

Extra Work at Force Account:

In accordance with Section 10-1.20 "Time-Related Overhead" of the contract Special Provisions, provide compensation to the Contractor for the Department's portion of the cost related to the Contractor's performance of an independent audit examination for the purpose of adjusting the contract time-related overhead rate.

Any actual adjustment to be made to the time-related overhead rate shall be addressed under a separate change order.

Estimated Cost of Extra Work at Force Account $30,000.00

Estimated Cost: Increase ☑ Decrease ☐ **$30,000.00**

By reason of this order the time of completion will be adjusted as follows: 0 days

Submitted by

Signature	Resident Engineer	Date
	BILL CASEY	12-30-09

Approval Recommended by

Signature	Area Construction Manager	Date
Deanna Vilcheck	DEANNA VILCHECK	1/5/10

Engineer Approval by

Signature	Area Construction Manager	Date
Deanna Vilcheck	DEANNA VILCHECK	1/19/10

We the undersigned contractor, have given careful consideration to the change proposed and agree, if this proposal is approved, that we will provide all equipment, furnish the materials, except as may otherwise be noted above, and perform all services necessary for the work above specified, and will accept as full payment therefor the prices shown above.

NOTE: If you, the contractor, do not sign acceptance of this order, your attention is directed to the requirements of the specifications as to proceeding with the ordered work and filing a written protest within the time therein specified.

Contractor Acceptance by

Signature	(Print name and title)	Date
	STEVE FRANCIS, CHIEF ESTIMATOR	1.13.10

STATE OF CALIFORNIA - DEPARTMENT OF TRANSPORTATION

CONTRACT CHANGE ORDER MEMORANDUM

TO: MIKE FORNER / DEANNA VILCHECK	FILE: E.A. 04 - 0120R4
	CO-RTE-PM SF-80-12.6/13.2
FROM: BILL CASEY	FED. NO.
CCO#: 114 SUPPLEMENT#: 0 Category Code: AXZZ	CONTINGENCY BALANCE (incl. this change) $44,014,346.59
COST: $30,000.00 INCREASE ☑ DECREASE ☐	HEADQUARTERS APPROVAL REQUIRED? ☐ YES ☑ NO
SUPPLEMENTAL FUNDS PROVIDED: $0.00	IS THIS REQUEST IN ACCORDANCE WITH ENVIRONMENTAL DOCUMENTS? ☑ YES ☐ NO
CCO DESCRIPTION: Time Related Overhead (TRO) Audit Costs	**PROJECT DESCRIPTION:** CONSTRUCT ROUTE 80 TEMP BYPASS STRUCTURE

Original Contract Time:	Time Adj. This Change:	Previously Approved CCO Time Adjustments:	Percentage Time Adjusted: (including this change)	Total # of Unreconciled Deferred Time CCO(s): (including this change)
475 Day(s)	0 Day(s)	1660 Day(s)	349 %	0

THIS CHANGE ORDER PROVIDES FOR:

Compensation to the contractor for the Department's portion of the contractor's costs pertaining to their time-related overhead audit examination.

This contract calls for the construction of a temporary detour for both eastbound and westbound I-80 traffic that allows for the tie in of the east span of the new San Francisco Oakland Bay Bridge (SFOBB) to Yerba Buena Island. The detour consist of three main structures, the east tie-in (ETI) to the bridge, the west tie-in (WTI) to the island and the Viaduct structure between the two.

Two separate Department strategy memorandums, dated December 14, 2006 and December 25, 2006, approved by Tony Anziano - Toll Bridge Program Manager and Richard Land - Chief Engineer, recommended that the Department assume responsibility for the designs of the East Tie-In (ETI) and West Tie-In (WTI) portions of this contract, and incorporated seismic retrofit work of the permanent Yerba Buena Island Transition Structure (YBITS) onto this project. The approval of these strategy memorandums extended the project completion date approximately 5 years.

Through various change orders, the contract has now been extended by 1,660 working days representing a 349% increase from the original 475 working days bid by the contractor. Section 10-1.20 "Time-Related Overhead" of the contract Special Provisions require that time-related overhead (TRO) be adjusted if increased beyond 149% of the originally TRO contract bid item. As TRO has significantly increased beyond the 149% threshold, a request has been made to have the contractor perform an independent audit examination that will provide a basis for the required TRO adjustment.

Section 10-1.20 "Time-Related Overhead" of the contract Special Provisions specifies that the cost of the independent audit examination be born equally by both the contractor and the Department. This change orders provides compensation for the Department's portion of these costs.

Compensation shall be paid as extra work at force account at an estimated cost of $30,000.00 which shall be funded by the contract's contingency funds. A cost estimate is on file.

No adjustment of contract time is warranted as this change will not affect the controlling operation.

This change was concurred with by Alec Melkonians - Asst. Project Manager and Minh B. Nguyen - Project Engineer.

Maintenance concurrence is not required as this is an administrative change.

ADA Notice: For individuals with sensory disabilities, this document is available in alternate formats. For information call: (916) 654-6410 or TDD (916) 654-3880 or write

CONCURRED BY:		
Construction Engineer:	Bill Casey, Resident Engineer	Date 12-30-09
Bridge Engineer:		Date
Project Engineer:	Minh B. Nguyen, PE	Date 12-28-09
Project Manager:	Alec Melkonians	Date 12-24-09
FHWA Rep.:		Date
Environmental:		Date
Other (specify):		Date
Other (specify):		Date
District Prior Approval By:		Date
HQ (Issue Approve) By:		Date
Resident Engineer's Signature:		Date 12-30-09

ESTIMATE OF COST

	THIS REQUEST	TOTAL TO DATE
ITEMS	$0.00	$0.00
FORCE ACCOUNT	$30,000.00	$30,000.00
AGREED PRICE	$0.00	$0.00
ADJUSTMENT	$0.00	$0.00
TOTAL	$30,000.00	$30,000.00

FEDERAL PARTICIPATION

☐ PARTICIPATING ☐ PARTICIPATING IN PART ☑ NONE
☐ NON-PARTICIPATING (MAINTENANCE) ☐ NON-PARTICIPATING

FEDERAL SEGREGATION (if more than one Funding Source or P.I.P. type)
☐ CCO FUNDED PER CONTRACT ☐ CCO FUNDED AS FOLLOWS

FEDERAL FUNDING SOURCE	PERCENT

ADA Notice: For individuals with sensory disabilities, this document is available in alternate formats. For information call: (916) 654-6410 or TDD (916) 654-3880 or write Records and Forms Management, 1120 N Street, MS-89, Sacramento, CA 95814.

STATE OF CALIFORNIA - DEPARTMENT OF TRANSPORTATION

CONTRACT CHANGE ORDER

Change Requested by: Engineer

CCO: 114	Suppl. No. 1	Contract No. 04 - 0120R4	Road SF-80-12.6/13.2	FED. AID LOC.:

To: **CC MYERS INC**

You are directed to make the following changes from the plans and specifications or do the following described work not included in the plans and specifications for this contract. ***NOTE: This change order is not effective until approved by the Engineer.***

Description of work to be done, estimate of quantities and prices to be paid. (Segregate between additional work at contract price, agreed price and force account.) Unless otherwise stated, rates for rental of equipment cover only such time as equipment is actually used and no allowance will be made for idle time. This last percentage shown is the net accumulated increase or decrease from the original quantity in the Engineer's Estimate.

Extra Work at Force Account:

Provide additional funds for the work specified under the original contract change order No. 114.

Estimated cost of Extra Work at Force Account $25,000.00

Estimated Cost: **Increase** ☑ **Decrease** ☐ **$25,000.00**

By reason of this order the time of completion will be adjusted as follows: 0 days

Submitted by

Signature	Resident Engineer	Date
Jeannette Balderramos	JEANNIE BALDERRAMOS	2-9-11

Approval Recommended by

Signature	Area Construction Manager	Date
Deanna Vilcheck	DEANNA VILCHECK	2/10/11

Engineer Approval by

Signature	Area Construction Manager	Date
Deanna Vilcheck	DEANNA VILCHECK	2/10/11

We the undersigned contractor, have given careful consideration to the change proposed and agree, if this proposal is approved, that we will provide all equipment, furnish the materials, except as may otherwise be noted above, and perform all services necessary for the work above specified, and will accept as full payment therefor the prices shown above.

NOTE: If you, the contractor, do not sign acceptance of this order, your attention is directed to the requirements of the specifications as to proceeding with the ordered work and filing a written protest within the time therein specified.

Contractor Acceptance by

Signature	(Print name and title)	Date
NOT REQUIRED.		

CONTRACT CHANGE ORDER

Change Requested by: Engineer

CCO 115	Suppl. No. 0	Contract No. 04 - 0120R4	Road SF-80-12.6/13.2	FED. AID LOC.: ACBRIM-080-1(097)N

To: CC MYERS INC

You are directed to make the following changes from the plans and specifications or do the following described work not included in the plans and specifications for this contract. ***NOTE: This change order is not effective until approved by the Engineer.***

Description of work to be done, estimate of quantities and prices to be paid. (Segregate between additional work at contract price, agreed price and force account.) Unless otherwise stated, rates for rental of equipment cover only such time as equipment is actually used and no allowance will be made for idle time. This last percentage shown is the net accumulated increase or decrease from the original quantity in the Engineer's Estimate.

Extra Work at Force Account:

Compensate the Contractor for the actual shipping costs incurred concerning the third shipment required for the steel truss of the Temporary Bypass Structure (Bridge No. 34-0006 (TEMP)) viaduct superstructure from the port of Pohang in South Korea to the project site. Compensation shall be paid based upon the actual shipping invoices issued by the contracted carrier to the Contractor's fabricator Dongkuk Structures & Construction Co., Ltd (Dongkuk). These shipping costs shall be invoiced to the Contractor under the same terms as material purchases, as stated in Exhibit A, Item 3 of the June 2, 2006 purchase agreement with Dongkuk.

Compensation paid at force account shall include all additional viaduct shipping costs, from the port of Pohang in South Korea to the project site, incurred due to the Department design enhancements to the steel viaduct that were incorporated into the approved Viaduct plans dated July 19, 2007.

Estimated Cost of Extra Work at Force Account $850,000.00

Estimated Cost: Increase ☑ Decrease ☐ **$850,000.00**

By reason of this order the time of completion will be adjusted as follows: 0 days

Submitted by

Signature	Resident Engineer	Date
	BILL CASEY	4-14-08

Approval Recommended by

Signature	Area Construction Manager	Date
	DENNIS TURCHON	4/15/08

Engineer Approval by

Signature	Area Construction Manager	Date
Michael Fong	DENNIS TURCHON	5-5-08

We the undersigned contractor, have given careful consideration to the change proposed and agree, if this proposal is approved, that we will provide all equipment, furnish the materials, except as may otherwise be noted above, and perform all services necessary for the work above specified, and will accept as full payment therefor the prices shown above.

NOTE: If you, the contractor, do not sign acceptance of this order, your attention is directed to the requirements of the specifications as to proceeding with the ordered work and filing a written protest within the time therein specified.

Contractor Acceptance by

Signature	(Print name and title)	Date
	DANIEL B. HUNSUCK, PRESIDENT	4/30/08

STATE OF CALIFORNIA - DEPARTMENT OF TRANSPORTATION

CONTRACT CHANGE ORDER MEMORANDUM

TO: MIKE FORNER / DENNIS TURCHON	FILE: E.A. 04 - 0120R4
	CO-RTE-PM SF-80-12.6/13.2
FROM: BILL CASEY	FED. NO. ACBRIM-080-1(097)N
CCO#: 115 SUPPLEMENT#: 0 Category Code: CHXX	CONTINGENCY BALANCE (incl. this change) $45,356,427.12
COST: $850,000.00 INCREASE ☑ DECREASE ☐	HEADQUARTERS APPROVAL REQUIRED? ☑ YES ☐ NO
SUPPLEMENTAL FUNDS PROVIDED: $0.00	IS THIS REQUEST IN ACCORDANCE WITH ENVIRONMENTAL DOCUMENTS? ☑ YES ☐ NO
CCO DESCRIPTION: VIA Shipping (July 2007 Plans)	PROJECT DESCRIPTION: CONSTRUCT ROUTE 80 TEMP BYPASS STRUCTURE

Original Contract Time:	Time Adj. This Change:	Previously Approved CCO Time Adjustments:	Percentage Time Adjusted: (including this change)	Total # of Unreconciled Deferred Time CCO(s): (including this change)
475 Day(s)	0 Day(s)	1195 Day(s)	252 %	7

THIS CHANGE ORDER PROVIDES FOR:

compensation to the contractor for additional shipping costs incurred due to Department ordered design enhancements to the fabrication of the Viaduct steel truss in South Korea.

This contract provides for the construction of a temporary detour for both eastbound and westbound I-80 traffic that allows for the tie in of the east span of the new San Francisco Oakland Bay Bridge (SFOBB) to Yerba Buena Island (YBI). The detour will allow for the construction of the permanent structure, the Yerba Buena Island Transition Structure, which connects the signature SAS structure to YBI.

The detour consist of three main structures, the East Tie-In (ETI) to the bridge, the West Tie-In (WTI) to the island and the Viaduct structure between the two tie ins. The contract was awarded as a performance based project with the contractor responsible for meeting the design criteria specified in the contract.

The Department's December 14, 2006 Strategy memo called for the East Tie-In (ETI) structure to be constructed by rolling out the existing structure and rolling in the new detour structure in lieu of the contractor's plan to incorporate the existing structure as part of the new detour. Due to this roll out/roll in design of the ETI, the Department ordered design enhancements to the contractor's design of the eastern most span (Span 51) of the Viaduct structure in order to provide for a proper conform to the rolled in ETI structure.

The Viaduct design enhancements where incorporated into the approved July 2007 Viaduct plans. These enhancements, however, resulted in significant delays to the fabrication of Span 51 which caused the contractor's fabricator, Dongkuk, to miss their scheduled shipping window. This window included 2 separate shipments that where to transport the fabricated steel for all 4 of the Viaduct spans (Spans 48 through 51). The delays resulted in the first 2 shipments transporting only Spans 48 through 50. This change order provides compensation for the required third shipment that will transport the Span 51 steel to the project when fabrication is completed.

Change Order No. 87 provided compensation at force account for additional costs associated with the first 2 shipments due to Department delays and design enhancements pertaining to the approved Viaduct plans issued in October 2006. The cost of this third shipment, incurred due to design enhancements pertaining to the approved July 2007 plans, shall be paid under this change order.

Compensation for the actual shipping costs incurred shall be paid as extra work at force account at an estimated cost of $850,000.00 which shall be financed from the contract's contingency funds. A cost estimate is on file.

Costs pertaining to the fabrication and erection of the Viaduct due to the Department design enhancements incorporated into the approved July 2007 plans are being addressed separately under Change Orders No. 99 and No. 105.

There will be no time adjustment by reason of this change since the work involved did not affect the controlling operation.

This change was concurred by Alec Melkonians - Asst. Project Manager.

Maintenance concurrence is not required as this change order will not affect any permanent roadway features.

ADA Notice: For individuals with sensory disabilities, this document is available in alternate formats. For information call: (916) 654-6410 or TDD (916) 654-3880 or write Records and Forms Management, 1120 N Street, MS-89, Sacramento, CA 95814.

CONCURRED BY:		
Construction Engineer:	BILL CASEY	Date 4/14/08
Bridge Engineer:		Date
Project Engineer:		Date
Project Manager:	Alec Melkonians	Date 4/14/08
FHWA Rep.:		Date
Environmental:		Date
Other (specify):	Patrick Treacy, HQ Asst.Const.Co	Date 4/14/08
Other (specify):		Date
District Prior Approval By:		Date
HQ (Issue Approve) By:	Ken Darby, HQ CCO Engineer	Date 4/22/08
Resident Engineer's Signature:		Date
		4-14-08

ESTIMATE OF COST

	THIS REQUEST	TOTAL TO DATE
ITEMS	$0.00	$0.00
FORCE ACCOUNT	$850,000.00	$850,000.00
AGREED PRICE	$0.00	$0.00
ADJUSTMENT	$0.00	$0.00
TOTAL	$850,000.00	$850,000.00

FEDERAL PARTICIPATION

☐ PARTICIPATING ☐ PARTICIPATING IN PART ☐ NONE
☐ NON-PARTICIPATING (MAINTENANCE) ☑ NON-PARTICIPATING

FEDERAL SEGREGATION (if more than one Funding Source or P.I.P. type)
☑ CCO FUNDED PER CONTRACT ☐ CCO FUNDED AS FOLLOWS

FEDERAL FUNDING SOURCE	PERCENT

ADA Notice: For individuals with sensory disabilities, this document is available in alternate formats. For information call: (916) 654-6410 or TDD (916) 654-3880 or write Records and Forms Management, 1120 N Street, MS-89, Sacramento, CA 95814.

CONTRACT CHANGE ORDER

Change Requested by: Engineer

CCO 116	Suppl. No. 0	Contract No. 04 - 0120R4	Road SF-80-12.6/13.2	FED. AID LOC.: ACBRIM-080-1(097)N

To: CC MYERS INC

You are directed to make the following changes from the plans and specifications or do the following described work not included in the plans and specifications for this contract. ***NOTE: This change order is not effective until approved by the Engineer.***

Description of work to be done, estimate of quantities and prices to be paid. (Segregate between additional work at contract price, agreed price and force account.) Unless otherwise stated, rates for rental of equipment cover only such time as equipment is actually used and no allowance will be made for idle time. This last percentage shown is the net accumulated increase or decrease from the original quantity in the Engineer's Estimate.

Extra Work at Force Account:

Provide compensation for all freight costs associated with the transportation of the finished fabricated steel for the skid bent and beam from the fabrication facility to the project site.

Estimated Cost of Extra Work at Force Account $1,200,000.00

Extra Work at Lump Sum:

Perform all work shown on the plans and specifications of Pages No. 3 through 39 of this change order to provide for the steel fabrication of the steel skid bent and beam of the East Tie-In (ETI) portion of the Temporary Bypass Structure (Bridge No. 34-0006 (TEMP)). All welding performed under this change order shall conform to Sheets No. 5 through 12 (Section 8-3._ WELDING) of Change Order No. 112.

For this work, the Contractor shall be compensated a lump sum of $12,966,180.00. Except for the items of work specifically excluded below, this sum constitutes full and final compensation, including all markups, for all costs associated with the work of this change.

The costs of procuring all raw steel and fasteners for the skid bent and beam are excluded from this change and shall be compensated under Change Order No. 112. The cost of all consumable materials is included in the lump sum price paid under this change order.

Fabrication of the frame for the construction walkway for the skid beam is included in the lump sum price of this change order with the procurement of raw steel and fasteners for this work compensated under Change Order No. 112. The design and fabrication of the flooring and railing for this walkway are excluded from this change order.

The costs associated with the erection of the skid bent and beam and the fabrication and erection of the ETI steel truss are excluded from this change order.

The cost of transporting the fabricated steel of the skid bent and beam to the project site is excluded from the lump sum price and shall be paid as extra work at force account under this change order. In the event the fabricated steel is required to be delivered and stored off-site, all additional storage, handling and transportation costs associated with this off-site storage shall be compensated under a separate change order.

The costs of unloading the fabricated steel at the project site are excluded from this change order and shall be compensated under a separate change order.

Total Cost of Extra Work at Agreed Lump Sum $12,966,180.00

There shall be no reduction in compensation for check samples removed from any mill located more than 480 airline kilometers from Sacramento and Los Angeles or for additional shop inspection expenses sustained by the State for fabrication sites more than 300 airline miles from both Sacramento and Los Angeles.

All payment clauses contained within the specifications of this change order are superseded by the agreed lump sum and force account payment methods specified above.

CONTRACT CHANGE ORDER

Change Requested by: Engineer

CCO 116 | Suppl. No. 0 | Contract No. 04 - 0120R4 | Road SF-80-12.6/13.2 | FED. AID LOC.: ACBRIM-080-1(097)N

Estimated Cost: Increase ☑ Decrease ☐ $14,166,180.00

By reason of this order the time of completion will be adjusted as follows: Deferred

Submitted by

Signature	Resident Engineer	Date
	BILL CASEY	5-28-08

Approval Recommended by

Signature	SFOBB Construction Manager	Date
Mike Forner	MIKE FORNER	6-2-08

Engineer Approval by

Signature	SFOBB Construction Manager	Date
Michael Forner	MIKE FORNER	7-18-08

We the undersigned contractor, have given careful consideration to the change proposed and agree, if this proposal is approved, that we will provide all equipment, furnish the materials, except as may otherwise be noted above, and perform all services necessary for the work above specified, and will accept as full payment therefor the prices shown above.

NOTE: If you, the contractor, do not sign acceptance of this order, your attention is directed to the requirements of the specifications as to proceeding with the ordered work and filing a written protest within the time therein specified.

Contractor Acceptance by

Signature	(Print name and title)	Date
	DANIEL E. HUNCK, PRESIDENT	7/17/08

SFOBB TEMPORARY BYPASS STRUCTURE

EAST TIE-IN SEGMENT
ROLL – OUT ROLL – IN

100% SUPERSTRUCTURE SPECIFICATIONS (STEEL STRUCTURES ONLY)

BRIDGE NO. 34-0006 (TEMP)

Location: 04-SF-80-12.6/13.2
EA No.: 0120R4

Project Title: South/South Detour – San Francisco-Oakland Bay Bridge
Project No.: 1295

Volume 1 of 1

CONTRACT NO. 04-0120R4

CONTRACT CHANGE ORDER NO 116

SHEET 3 OF 39

April 4, 2008

The special provisions contained herein have been prepared by or under the direction of the following Registered Persons.

STRUCTURES

REGISTERED CIVIL ENGINEER

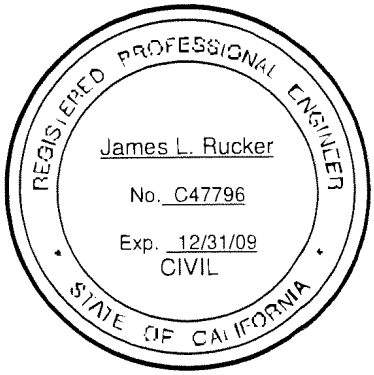

CONTRACT NO. 04-0120R4

CONTRACT CHANGE ORDER NO 116

SHEET 4 OF 39

TABLE OF CONTENTS

TABLE OF CONTENTS 3
10-1.__ STEEL STRUCTURES 4
GENERAL 4
MATERIALS 4
FABRICATION 5
ELASTOMERIC BEARING PADS 5
CHECK TESTING 5
ROTATIONAL CAPACITY TESTING PRIOR TO SHIPMENT TO JOB SITE 6
INSTALLATION TENSION TESTING AND ROTATIONAL CAPACITY TESTING AFTER ARRIVAL ON THE JOB SITE 11
SURFACE PREPARATION 12
SEALING 12
REMOVE AND REPLACE FASTENERS 12
WELDING 13
MEASUREMENT AND PAYMENT 14

CONTRACT NO. 04 0120R4

CONTRACT CHANGE ORDER NO 116

SHEET 5 OF 39

10-1.__ STEEL STRUCTURES

Construction of steel structures, including skid bents, shall conform to the provisions in Section 55, "Steel Structures," of the Standard Specifications and these special provisions.

GENERAL

Skid bents shall be constructed by the Contractor and, when no longer required for the construction of the work, shall be removed in conformance with the provisions in "Bridge Removal" of these special provisions.

Attention is directed to "Welding" in Section 8, "Materials," of these special provisions. Fabrication and erection shall conform to ANSI/AASHTO/AWS D1.5, the Standard Specifications, and these special provisions.

Attention is directed to "Bridge Removal," of these special provisions regarding removal of skid bents.

Facing of Bearing Surfaces

The surface finish of bearing and base plates and other bearing surfaces that are to come in contact with each other or with concrete shall meet the ANSI surface roughness requirements as defined in ANSI B46.1, "Surface Roughness, Waviness, and Lay," Part I:

Bearing Surface	ANSI Requirement
Heavy plates in contact in shoes to be welded	1 000
Milled ends of compression members, milled or ground ends of stiffeners and fillers	500
Sliding bearings	125

The following substitutions, A 490 for A 490M only or A 325 for A 325M only as shown on the plans, of high-strength steel fasteners may be made:

METRIC SIZE SHOWN ON THE PLANS	SIZE TO BE SUBSTITUTED
ASTM Designation: A490M or A 325M (Nominal bolt diameter (mm))	ASTM Designation: A490 or A 325 (Nominal bolt diameter (inch))
13, 12.70, or M12	1/2
16, 15.88, or M16	5/8
19, 19.05, or M20	3/4
22, 22.22, or M22	7/8
24, 25, 25.40, or M24	1
29, 28.58, or M27	1 1/8
32, 31.75, or M30	1 1/4
38, 38.10, or M36	1 1/2

MATERIALS

Structural steel shall conform to ASTM Designation: A709M or as otherwise shown in the plans. Charpy V-notch testing shall use Zone 2 requirements.

HSS members shall conform to ASTM Designation: A500, Grade B, or ASTM Designation: A847, with Charpy V-Notch testing performed on a heat basis (H) per ASTM Designation: A673 with an acceptance criteria of 20J at 4C minimum average.

Steel for members, shown on the plans as fracture critical members, shall conform to the requirements in AWS D1.5, Section 12, "AASHTO/AWS Fracture Control Plan (FCP) for Non-Redundant Members." Charpy V-notch (CVN) impact values for fracture critical members shall conform to the requirements for Zone 2.

At the option of the Contractor, steel pipe for skid bents may be fabricated from plate as specified below or purchased as a tubular fabricated in accordance with API SPECIFICATION 5L, Grade X52 with PSL2. Pipe shall be fabricated by an API licensed facility and shall include API Monogram marking. Pipe furnished in accordance with these requirements will be considered equivalent to ASTM Designation: A709, Grade 345T2 with respect to weld procedure qualification and other requirements of AWS D1.5.

FABRICATION

The Contractor shall submit to the Engineer for approval in accordance with the requirements for "Working Drawings" of these special provisions, written detailed procedures for the fabrication and erection of the ETI Truss. Procedures shall include inspection hold points and description of the sequence and practices to be used to ensure that the dimensional tolerances are met.

Fabricated Steel Pipe (Skid Bents)

Cylindrical tubular members formed from steel plate shall be fabricated as single seam welded pipe in accordance with the requirements in API "Specification for the Fabrication of Structural Steel Pipe- API SPECIFICATION 2B," 6th Edition, with the following modifications:

A. Plate shall conform to the requirements on the plans
B. Welding consumables shall conform to AWS D1.5, Table 4.1 for matching filler
C. Weld procedures shall be qualified and applied in accordance with AWS D1.5, including Charpy V-Notch testing and welding heat input control.
D. Charpy V-Notch tests of the coarse grained heat affected zone shall be included in the weld procedure qualification tests and shall meet the base steel Zone 1 requirement
E. Longitudinal seams shall be examined 100% by radiographic or ultrasonic inspection in accordance with API Spec 2B.
F. Acceptance criteria for RT and UT in API Spec 2B, Section 7.3 shall be replaced by AWS D1.5, Section 6.26 for welds in tension.

ELASTOMERIC BEARING PADS

Elastomeric bearing pads shall conform to the provisions in Section 51-1.12H, "Elastomeric Bearing Pads," of the Standard Specifications and these special provisions.

Elastomeric bearing pads shall be bonded to steel with adhesive conforming to Federal Specification MMM-A-121, where shown on the plans.

CHECK TESTING

Structural steel shall conform to the designated ASTM Standard and the check testing requirements of this section.

Check samples shall be furnished for each heat of maximum thickness of:

A. Tension flanges and webs of fracture critical members.

Steel plates, shapes, or bars containing check samples shall be furnished from the mill with extra length in order to provide for removal of material for check samples at the point of fabrication. Check samples may be cut from either end of the designated plate, shape, or bar.

At the option of the Contractor, check samples may be removed at the rolling mill rather than at the point of fabrication. The sample will be removed from the mill plate that will be stripped by the fabricator to produce the designated plate and may be taken from any location within that plate. The mill plate from which samples are removed shall be marked with the same identifying numbers as are used on the samples.

Material for check samples shall be removed by the Contractor in the presence of the Engineer. Check samples for plates wider than 610 mm shall be 355 mm wide and 460 mm long with the long dimension transverse to the direction of rolling. Check samples for all other products shall be 460 mm long, taken in the direction of rolling, and the width shall be the product width. Check samples shall be removed and delivered to the Engineer before the material is fabricated into components. The direction of rolling, heat numbers, and plate numbers shall be marked on the samples with paint or other indelible marking material or may be steel stamped in one corner of the plate.

Check samples shall be delivered to the Transportation Laboratory at the Contractor's expense. The check samples will be tested by the Transportation Laboratory for compliance with the requirements specified in ASTM and these special provisions. Check sample test results will be reported to the Contractor within 3 weeks of delivery to the Transportation Laboratory. In the event several samples are submitted on the same day, an additional day will be added for every 2 samples submitted. The test report will be made for the group of samples.

The results of the tensile and impact tests shall not vary more than 5 percent below the specified minimum or 5 percent above the specified maximum requirements. If the initial check test results vary more than 5 percent but not more than 10 percent from the specified requirements, a retest may be performed on another sample from the same heat and thickness. The results of the retest shall not vary more than 5 percent from the original specified requirements. If the results of check tests exceed these permissible variations, material planned for use from the heat represented by said check samples shall be subject to rejection.

ROTATIONAL CAPACITY TESTING PRIOR TO SHIPMENT TO JOB SITE

Rotational capacity tests shall be performed on all lots of high-strength fastener assemblies prior to shipment of these lots to the project site. Zinc-coated assemblies shall be tested after all fabrication, coating, and lubrication of components has been completed. One hardened washer shall be used under each nut for the tests.

The requirements of this section do not apply to high-strength cap screws or high-strength bolts used for slip base plates.

Each combination of bolt production lot, nut lot, and washer lot shall be tested as an assembly.

A rotational capacity lot number shall be assigned to each combination of lots tested. Each shipping unit of fastener assemblies shall be plainly marked with the rotational capacity lot number.

Two fastener assemblies from each rotational capacity lot shall be tested.

The following equipment, procedure, and acceptance criteria shall be used to perform rotational capacity tests on and determine acceptance of long bolts. Fasteners are considered to be long bolts when full nut thread engagement can be achieved when installed in a bolt tension measuring device:

A. Long Bolt Test Equipment:

CONTRACT NO. 04-0120R4

CONTRACT CHANGE ORDER NO 116

SHEET 8 OF 39

1. Calibrated bolt tension measuring device with adequate tension capacity for the bolts being tested.
2. Calibrated dial or digital torque wrench. Other suitable tools will be required for performing Steps 7 and 8 of the Long Bolt Test Procedure. A torque multiplier may be required for large diameter bolts.
3. Spacer washers or bushings. When spacer washers or bushings are required, they shall have the same inside diameter and equal or larger outside diameter as the appropriate hardened washers conforming to the requirements in ASTM Designation: F436.
4. Steel beam or member, such as a girder flange or cross frame, to which the bolt tension measuring device will be attached. The device shall be accessible from the ground.

B Long Bolt Test Procedure:

1. Measure the bolt length. The bolt length is defined as the distance from the end of the threaded portion of the shank to the underside of the bolt head.
2. Install the nut on the bolt so that 3 to 5 full threads of the bolt are located between the bearing face of the nut and the underside of the bolt head. Measure and record the thread stickout of the bolt. Thread stickout is determined by measuring the distance from the outer face of the nut to the end of the threaded portion of the shank.
3. Insert the bolt into the bolt tension measuring device and install the required number of washers, and additional spacers as needed, directly beneath the nut to produce the thread stickout measured in Step 2 of this procedure.
4. Tighten the nut using a hand wrench to a snug-tight condition. The snug tension shall not be less than the Table A value but may exceed the Table A value by a maximum of 2 kips.

Table A—High-Strength Fastener Assembly Tension Values to Approximate Snug-Tight Condition

Bolt Diameter (inches)	Snug Tension (kips)	
	A 325	A 490
1/2	1	2
5/8	2	2
3/4	3	4
7/8	4	5
1	5	6
1 1/8	6	8
1 1/4	7	10
1 3/8	9	12
1 1/2	10	15

5. Match-mark the assembly by placing a heavy reference start line on the face plate of the bolt tension measuring device which aligns with 1) a mark placed on one corner of the nut, and 2) a radial line placed across the flat on the end of the bolt, or on the exposed portions of the threads of tension control bolts. Place an additional mark on the outside of the socket that overlays the mark on the nut corner such that this mark will be visible while turning the nut. Make an additional mark on the face plate, either 2/3 of a turn, one turn, or 1 1/3 turn clockwise from the heavy reference start line, depending on the bolt length being tested as shown in Table B.

CONTRACT NO. 84-0120R4
CONTRACT CHANGE ORDER NO 116
SHEET 9 OF 37

A325 and A490 Table B

Required Nut Rotation for Rotational Capacity Tests (a,b)	
Bolt Length (measured in Step 1)	Required Rotation (turn)
4 bolt diameters or less	2/3
Greater than 4 bolt diameters but no more than 8 bolt diameters	1
Greater than 8 bolt diameters, but no more than 12 bolt diameters (c)	1 1/3
(a) Nut rotation is relative to bolt, regardless of the element (nut or bolt) being turned. For bolts installed by 1/2 turn and less, the tolerance shall be plus or minus 30 degrees; for bolts installed by 2/3 turn and more, the tolerance shall be plus or minus 45 degrees. (b) Applicable only to connections in which all material within grip of the bolt is steel. (c) When bolt length exceeds 12 diameters, the required rotation shall be determined by actual tests in a suitable tension device simulating the actual conditions.	

6. Turn the nut to achieve the applicable minimum bolt tension value listed in Table C. After reaching this tension, record the moving torque, in foot-pounds, required to turn the nut, and also record the corresponding bolt tension value in pounds. Torque shall be measured with the nut in motion. Calculate the value, T (in ft-lbs), where T=[(the measured tension in pounds) x (the bolt diameter in inches) / 48 in/ft].

Table C—Minimum Tension Values for High-Strength Fastener Assemblies

Bolt Diameter (inches)	Minimum Tension (kips)	
	A 325	A 490
½	12	15
5/8	19	24
¾	28	35
7/8	39	49
1	51	64
1 1/8	56	80
1 ¼	71	102
1 3/8	85	121
1 ½	103	148

7. Turn the nut further to increase bolt tension until the rotation listed in Table B is reached. The rotation is measured from the heavy reference line made on the face plate after the bolt was snug-tight. Record this bolt tension.
8. Loosen and remove the nut and examine the threads on both the nut and bolt.

C. Long Bolt Acceptance Criteria:

CONTRACT NO. 54-5126R4
CONTRACT CHANGE ORDER NO 116
SHEET 10 OF 39

1. An assembly shall pass the following requirements to be acceptable: 1) the measured moving torque (Step 6) shall be less than or equal to the calculated value, T (Step 6), 2) the bolt tension measured in Step 7 shall be greater than or equal to the applicable turn test tension value listed in Table D, 3) the nut shall be able to be removed from the bolt without signs of thread stripping or galling after the required rotation in Step 7 has been achieved, 4) the bolt does not shear from torsion or fail during the test, and 5) the assembly does not seize before the final rotation in Step 7 is reached. Elongation of the bolt in the threaded region between the bearing face of the nut and the underside of the bolt head is expected and will not be considered a failure. Both fastener assemblies tested from one rotational capacity lot shall pass for the rotational capacity lot to be acceptable.

Table D—Turn Test Tension Values

Bolt Diameter (inches)	Turn Test Tension (kips)	
	A 325	A 490
½	14	17
5/8	22	28
3/4	32	40
7/8	45	56
1	59	74
1 1/8	64	92
1 1/4	82	117
1 3/8	98	139
1 1/2	118	170

The following equipment, procedure, and acceptance criteria shall be used to perform rotational capacity tests on and determine acceptance of short bolts. Fasteners are considered to be short bolts when full nut thread engagement cannot be achieved when installed in a bolt tension measuring device:

A. Short Bolt Test Equipment:

1. Calibrated dial or digital torque wrench. Other suitable tools will be required for performing Steps 7 and 8 of the Short Bolt Test Procedure. A torque multiplier may be required for large diameter bolts.
2. Spud wrench or equivalent.
3. Spacer washers or bushings. When spacer washers or bushings are required, they shall have the same inside diameter and equal or larger outside diameter as the appropriate hardened washers conforming to the requirements in ASTM Designation: F436.
4. Steel plate or girder with a hole to install bolt. The hole size shall be 1.6 mm greater than the nominal diameter of the bolt to be tested. The grip length, including any plates, washers, and additional spacers as needed, shall provide the proper number of threads within the grip, as required in Step 2 of the Short Bolt Test Procedure.

B. Short Bolt Test Procedure:

1. Measure the bolt length. The bolt length is defined as the distance from the end of the threaded portion of the shank to the underside of the bolt head.

CONTRACT NO. 64-0126R4
CONTRACT CHANGE ORDER NO 116
SHEET 11 OF 39

2. Install the nut on the bolt so that 3 to 5 full threads of the bolt are located between the bearing face of the nut and the underside of the bolt head. Measure and record the thread stickout of the bolt. Thread stickout is determined by measuring the distance from the outer face of the nut to the end of the threaded portion of the shank.
3. Install the bolt into a hole on the plate or girder and install the required number of washers and additional spacers as needed between the bearing face of the nut and the underside of the bolt head to produce the thread stickout measured in Step 2 of this procedure.
4. Tighten the nut using a hand wrench to a snug-tight condition. The snug condition shall be the full manual effort applied to the end of a 305 mm long wrench. This applied torque shall not exceed 20 percent of the maximum allowable torque in Table E.

Table E—Maximum Allowable Torque for High-Strength Fastener Assemblies

Bolt Diameter (inches)	Torque (ft-lbs)	
	A 325	A 490
½	145	180
5/8	285	360
3/4	500	630
7/8	820	1030
1	1220	1540
1 1/8	1500	2160
1 1/4	2130	3060
1 3/8	2800	3990
1 1/2	3700	5320

5. Match-mark the assembly by placing a heavy reference start line on the steel plate or girder which aligns with 1) a mark placed on one corner of the nut and 2) a radial line placed across the flat on the end of the bolt or on the exposed portions of the threads of tension control bolts. Place an additional mark on the outside of the socket that overlays the mark on the nut corner such that this mark will be visible while turning the nut. Make 2 additional small marks on the steel plate or girder, one 1/3 of a turn and one 2/3 of a turn clockwise from the heavy reference start line on the steel plate or girder.
6. Using the torque wrench, tighten the nut to the rotation value listed in Table F. The rotation is measured from the heavy reference line described in Step 5 made after the bolt was snug-tight. A second wrench shall be used to prevent rotation of the bolt head during tightening. Measure and record the moving torque after this rotation has been reached. The torque shall be measured with the nut in motion.

CONTRACT NO. 04-0120R4

CONTRACT CHANGE ORDER NO 116

SHEET 12 OF 39

A325 and A490 Table F

Nut Rotation Required for Turn-of-Nut Installation (a,b)	
Bolt Length (measured in Step 1)	Required Rotation (turn)
4 bolt diameters or less	1/3
(a) Nut rotation is relative to bolt, regardless of the element (nut or bolt) being turned. For bolts installed by 1/2 turn and less, the tolerance shall be plus or minus 30 degrees. (b) Applicable only to connections in which all material within grip of the bolt is steel.	

7. Tighten the nut further to the 2/3-turn mark as indicated in Table G. The rotation is measured from the heavy reference start line made on the plate or girder when the bolt was snug-tight. Verify that the radial line on the bolt end or on the exposed portions of the threads of tension control bolts is still in alignment with the start line.

A325 and A490 Table G

Required Nut Rotation for Rotational Capacity Test	
Bolt Length (measured in Step 1)	Required Rotation (turn)
4 bolt diameters or less	2/3

8. Loosen and remove the nut and examine the threads on both the nut and bolt.

C. Short Bolt Acceptance Criteria:

1. An assembly shall pass the following requirements to be acceptable: 1) the measured moving torque from Step 6 shall be less than or equal to the maximum allowable torque from Table E, 2) the nut shall be able to be removed from the bolt without signs of thread stripping or galling after the required rotation in Step 7 has been achieved, 3) the bolt does not shear from torsion or fail during the test, and 4) the assembly shall not seize before the final rotation in Step 7 is reached. Elongation of the bolt in the threaded region between the bearing face of the nut and the underside of the bolt head will not be considered a failure. Both fastener assemblies tested from one rotational capacity lot shall pass for the rotational capacity lot to be acceptable.

INSTALLATION TENSION TESTING AND ROTATIONAL CAPACITY TESTING AFTER ARRIVAL ON THE JOB SITE

Installation tension tests and rotational capacity tests on high-strength fastener assemblies shall be performed by the Contractor prior to acceptance or installation and after arrival of the fastener assemblies on the project site. Installation tension tests and rotational capacity tests shall be performed at the job-site, in the presence of the Engineer, on each rotational capacity lot of fastener assemblies.

The requirements of this section do not apply to high-strength cap screws or high-strength bolts used for slip base plates.

Installation tension tests shall be performed on 3 representative fastener assemblies in conformance with the provisions in Section 8, "Installation," of the RCSC Specification. For short bolts, Section 8.2, "Pretensioned Joints," of the RCSC Specification shall be replaced by

CONTRACT NO. 04-612524
CONTRACT CHANGE ORDER NO 116
SHEET 13 OF 39

the "Pre-Installation Testing Procedures," of the "Structural Bolting Handbook," published by the Steel Structures Technology Center, Incorporated.

The rotational capacity tests shall be performed in conformance with the requirements for rotational capacity tests in "Rotational Capacity Testing Prior to Shipment to Job Site" of these special provisions.

At the Contractor's expense, additional installation tension tests, tests required to determine job inspecting torque, and rotational capacity tests shall be performed by the Contractor on each rotational capacity lot, in the presence of the Engineer, if 1) any fastener is not used within 3 months after arrival on the jobsite, 2) fasteners are improperly handled, stored, or subjected to inclement weather prior to final tightening, 3) significant changes are noted in original surface condition of threads, washers, or nut lubricant, or 4) the Contractor's required inspection is not performed within 48 hours after all fasteners in a joint have been tensioned.

Failure of a job-site installation tension test or a rotational capacity test will be cause for rejection of unused fasteners that are part of the rotational capacity lot.

When direct tension indicators are used, installation verification tests shall be performed in conformance with Appendix Section X1.4 of ASTM Designation: F959, except that bolts shall be initially tensioned to a value 5 percent greater than the minimum required bolt tension.

SURFACE PREPARATION

For all bolted connections, the 1) contact surfaces, 2) outer surfaces of existing members that are within the grip and will be hidden by surfaces of outside existing members within the grip under bolt heads, nuts, and washers, and 3) inside surfaces of bolt holes shall be cleaned and coated before assembly in conformance with the provisions for cleaning and painting structural steel of these special provisions.

SEALING

The perimeter around all direct tension indicator gaps shall be completely sealed with non-silicone type sealing compound conforming to the provisions in Federal Specification TT-S-230, Type II. The sealant shall be gray in color and have a minimum thickness of 1.3 mm. If painting is required, the sealing compound shall be applied prior to painting.

When zinc-coated tension control bolts are used, the sheared end of each fastener shall be completely sealed with non-silicone type sealing compound conforming to the provisions in Federal Specification TT-S-230, Type II. The sealant shall be gray in color and shall have a minimum thickness of 1.3 mm. The sealant shall be applied to a clean sheared surface on the same day that the splined end is sheared off.

REMOVE AND REPLACE FASTENERS

Existing rivets shall be removed and replaced with new high strength bolts as shown on the plans, as specified in these special provisions, and as directed by the Engineer.

Cleaning and painting of exposed steel surfaces in connection with drilling and bolting operations shall conform to the provisions in "Surface Preparation" and "Sealing" of this section.

The Contractor shall submit to the Engineer, in conformance with the provisions in Section 5-1.02, "Plans and Working Drawings," of the standard specifications, the proposed method of rivet removal and replacement for approval. The Contractor shall allow 10 working days review time, after complete drawings and procedures are received by the Engineer.

Unless otherwise shown on the plans, Contractor shall replace rivets with bolts in one group at a time, where a group consists of those rivets connecting a single member to a single gusset plate. The Contractor shall remove and replace no more than 20% of the rivets in a group at a

CONTRACT NO. 64-0120R4
CONTRACT CHANGE ORDER NO 116
SHEET 14 OF 39

time. Rivet removal will not be permitted until the removal and replacement method has been approved by the Engineer.

Where existing rivets are removed, the holes shall be enlarged not more than 1.5 mm in diameter greater than the nominal diameter of the replacement bolt.

Rivets to be removed shall have their head chipped off and the shank driven or drilled out. Care shall be taken not to enlarge rivet holes or to damage remaining material. If heat is to be used, the Contractor shall demonstrate the adequacy of his proposed removal method to the Engineer for approval.

Heat resulting from any removal method shall not damage or change rivet holes or the surrounding material.

Rust on the sides of the holes shall be removed. Holes shall be reamed, as approved by the Engineer, in conformance with the provisions in "Surface Preparation Specification No.2" of the SSPC: The Society for Protective Coatings, if the rust cannot be removed by any other means.

Where reamed holes are enlarged by more than 3 mm larger than the replacement bolt nominal diameter, the next larger size bolt shall be installed. If the Engineer orders such hole enlargement, replacement with the next larger size bolt will be paid for as extra work as provided in Section 4-1.03D, "Extra Work," of the Standard Specifications.

Where such hole enlargement is done without the Engineer's approval, replacement with the next larger size bolt will be at the Contractor's expense.

Holes shall be enlarged by reaming. Flame cutting will not be permitted.

Holes which must be enlarged to facilitate entry of the bolt shall be reamed. Poor alignment of holes shall be cause for rejection. Where reamed holes exceed the nominal diameter of the bolt by more than 3 mm, the next larger size bolt shall be installed. Where the misalignment occurs in existing material, the larger bolt will be paid for as extra work as provided in Section 4-1.03D, "Extra Work," of the Standard Specifications, otherwise the larger bolt shall be at the Contractor's expense.

Full compensation for removing and replacing fasteners as shown on the plans, or removing and replacing fasteners in order to erect new structural steel, or as needed by the Contractor to verify dimensions, shall be considered as included in the contract prices paid per pound for erect structural steel of the types shown on the Engineer's Estimate and no additional compensation will be allowed therefor.

WELDING

Table 2.2 of AWS D1.5 is superseded by the following table:

Base Metal Thickness of the Thicker Part Joined, mm	Minimum Effective Partial Joint Penetration Groove Weld Size, * mm
Over 6 to 13 inclusive	5
Over 13 to 19 inclusive	6
Over 19 to 38 inclusive	8
Over 38 to 57 inclusive	10
Over 57 to 150 inclusive	13
Over 150	16

* Except the weld size need not exceed the thickness of the thinner part

Dimensional details and workmanship for welded joints in tubular and pipe connections shall conform to the provisions in Part A, "Common Requirements of Nontubular and Tubular Connections," and Part D, "Specific Requirements for Tubular Connections," in Section 2 of AWS D1.1.

CONTRACT NO. 64-6120 R4
CONTRACT CHANGE ORDER NO 11
SHEET 15 OF 33

Backing for welds, subject to computed stresses, that is left in place in the completed structure as shown on the plans or approved by the Engineer shall be a single length. Backing shall be of the same material as the structural steel being welded. Single lengths of backing shall be obtained by using a continuous strip, or may consist of lengths of backing joined by full penetration butt welds. Butt welds in the backing material shall be subject to the same type and frequency of testing as specified for the type of joint in the material being joined. Butt welds in backing material shall be ground flush as necessary to obtain proper inspection and for proper fit-up in the welded joint with which the backing is to be used.

Welding of temporary fixtures such as lifting lugs or temporary shear enhancement devices shall be shown on the working drawings and shall conform to AWS D1.5. After removal, the structure shall be repaired as necessary to meet the requirements of these special provisions and AWS D1.5.

Gas Metal Arc Welding (GMAW), but not with short-circuiting transfer, will be permitted only for tack welding of structural members.

Weld joint details BTC-P10, BTC-P10-GF, BTC-P10-S from Figure 3.3 of AWS D1.1 shall be included as standard weld joint details as if it were included in Figure 2.5 in AWS D1.5.

MEASUREMENT AND PAYMENT

If a portion of or all check samples are removed at a mill more than 480 air line kilometers from both Sacramento and Los Angeles, shop inspection expenses will be sustained by the State which are in addition to expenses incurred for fabrication site inspection. Payment to the Contractor for furnishing structural steel will be reduced $2,000 for each mill located more than 480 air line kilometers from both Sacramento and Los Angeles.

Furnish structural steel (truss) and furnish structural steel (skid bent) will be paid for in the same manner as specified for furnish structural steel (bridge) in Section 55-4.02, "Payment," of the Standard Specifications.

Erect structural steel (truss) and erect structural steel (skid bent) will be paid for in the same manner as specified for erect structural steel (bridge) in Section 55-4.02, "Payment," of the Standard Specifications.

The contract lump sum price paid for strengthen existing bridge shall include full compensation for furnishing all labor, materials, tools, equipment, and incidentals and for doing all work involved in strengthen existing bridge, complete in place, including elastomeric bearing pads, as shown on the plans, as specified in the Standard Specifications and these special provisions, and as directed by the Engineer.

CONTRACT NO. 04-0120R4

CONTRACT CHANGE ORDER NO 116

SHEET 16 OF 39

INDEX TO PLANS

SHEET NO. TITLE

1. GENERAL PLAN (Note 1)
2. INDEX TO PLANS
3. GENERAL NOTES NO. 1
4. GENERAL NOTES NO. 2
5. DECK CONTOURS
6. FOUNDATION PLAN (Note 1)
7. BENT 52A LAYOUT
8. BENT CAP DETAILS NO. 1
9. BENT CAP DETAILS NO. 2
10. BENT CAP DETAILS NO. 3
11. BENT CAP DETAILS NO. 4
12. BENT 52A FOOTING DETAILS NO. 1 (Note 1)
13. BENT 52A FOOTING DETAILS NO. 2
14. SKID BENT FOOTING DETAILS NO. 1
15. SKID BENT FOOTING DETAILS NO. 2
16. SKID BENT FOOTING DETAILS NO. 3
17. SKID BENT FOOTING DETAILS NO. 4
18. SKID BENT FOOTING DETAILS NO. 5
19. SKID BENT FOOTING DETAILS NO. 6
20. SHEET NOT USED
21. SUPPORT AT PIER E1
22. SUPPORT AT PIER E1 DETAILS NO. 1
23. SUPPORT AT PIER E1 DETAILS NO. 2
24. SUPPORT AT PIER E1 DETAILS NO. 3
25. SUPPORT AT PIER E1 DETAILS NO. 4
26. SHEET NOT USED
27. FRAMING PLAN NO. 1
28. FRAMING PLAN NO. 2
29. TYPICAL SECTION
30. TRUSS CAMBER
31. FLOOR BEAM & STRINGER CAMBER
32. TRUSS LAYOUT NO. 1
33. TRUSS LAYOUT NO. 2
34. TRUSS LAYOUT NO. 3
35. TRUSS LAYOUT NO. 4
36. TRUSS JOINT DETAILS NO. 1
37. TRUSS JOINT DETAILS NO. 2
38. TRUSS JOINT DETAILS NO. 3
39. TRUSS JOINT DETAILS NO. 4
40. TRUSS JOINT DETAILS NO. 5
41. TRUSS JOINT DETAILS NO. 6
42. TRUSS JOINT DETAILS NO. 7
43. TRUSS JOINT DETAILS NO. 8
44. TRUSS JOINT DETAILS NO. 9
45. TRUSS JOINT DETAILS NO. 10
46. TRUSS JOINT DETAILS NO. 11
47. TRUSS JOINT DETAILS NO. 12
48. TRUSS JOINT DETAILS NO. 13
49. TRUSS JOINT DETAILS NO. 14
50. TRUSS JOINT DETAILS NO. 15
51. TRUSS JOINT DETAILS NO. 16
52. TRUSS JOINT DETAILS NO. 17
53. TRUSS JOINT DETAILS NO. 18
54. SHEET NOT USED
55. SHEET NOT USED
56. SHEET NOT USED
57. FLOOR BEAM DETAILS NO. 1
58. FLOOR BEAM DETAILS NO. 2
59. FLOOR BEAM DETAILS NO. 3
60. STRINGER DETAILS NO. 1
61. STRINGER DETAILS NO. 2
62. STRINGER DETAILS NO. 3
63. STRINGER DETAILS NO. 4
64. STRINGER DETAILS NO. 5
65. UPPER LATERAL BRACING LAYOUT NO. 1
66. UPPER LATERAL BRACING LAYOUT NO. 2
67. LOWER LATERAL BRACING LAYOUT NO. 1
68. LOWER LATERAL BRACING LAYOUT NO. 2
69. LATERAL BRACING DETAILS NO. 1
70. LATERAL BRACING DETAILS NO. 2
71. LATERAL BRACING DETAILS NO. 3
72. LATERAL BRACING DETAILS NO. 4
73. LATERAL BRACING DETAILS NO. 5
74. LATERAL BRACING DETAILS NO. 6
75. LATERAL BRACING DETAILS NO. 7
76. LATERAL BRACING DETAILS NO. 8
77. LATERAL BRACING DETAILS NO. 9
78. LATERAL BRACING DETAILS NO. 10
79. BEAM SEAT DETAILS NO. 1
80. BEAM SEAT DETAILS NO. 2
81. BEAM SEAT DETAILS NO. 3
82. FLOOR BEAM TOP BRACKET DETAILS NO. 1
83. FLOOR BEAM TOP BRACKET DETAILS NO. 2
84. STEEL GIRDER DETAILS
85. MAN HOLE & HAND HOLE DETAILS
86. CONCRETE DECK DETAILS NO. 1
87. CONCRETE DECK DETAILS NO. 2
88. CONCRETE DECK DETAILS NO. 3
89. POUR SEQUENCE
90. BENT 52A EXPANSION JOINT LAYOUT
91. BENT 52A EXPANSION JOINT DETAILS NO. 1
92. BENT 52A EXPANSION JOINT DETAILS NO. 2
93. BENT 52A EXPANSION JOINT DETAILS NO. 3
94. BENT 52A EXPANSION JOINT DETAILS NO. 4
95. BENT 52A EXPANSION JOINT DETAILS NO. 5
96. BENT 52A EXPANSION JOINT DETAILS NO. 6
97. BENT 52A EXPANSION JOINT BARRIER NO. 1
98. BENT 52A EXPANSION JOINT BARRIER NO. 2
99. PIER E1 EXPANSION JOINT LAYOUT
100. PIER E1 EXPANSION JOINT DETAILS NO. 1
101. PIER E1 EXPANSION JOINT DETAILS NO. 2
102. PIER E1 EXPANSION JOINT DETAILS NO. 3
103. PIER E1 EXPANSION JOINT DETAILS NO. 4
104. PIER E1 EXPANSION JOINT DETAILS NO. 5
105. PIER E1 EXPANSION JOINT BARRIER NO. 1
106. PIER E1 EXPANSION JOINT BARRIER NO. 2
107. PIER E1 EXPANSION JOINT BARRIER NO. 3
108. PIER E1 EXPANSION JOINT BARRIER NO. 4
109. PIER E1 EXPANSION JOINT BARRIER NO. 5
110. PIER E1 EXPANSION JOINT BARRIER NO. 6
111. PIER E1 EXPANSION JOINT BARRIER NO. 7
112. JOINT SEAL ASSEMBLY
113. BEARING DETAILS NO. 1
114. BEARING DETAILS NO. 2
115. MISCELLANEOUS DETAILS NO. 1
116. MISCELLANEOUS DETAILS NO. 2
117. MISCELLANEOUS DETAILS NO. 3
118. MISCELLANEOUS DETAILS NO. 4
119. MISCELLANEOUS DETAILS NO. 5
120. EXISTING TRUSS LAYOUT NO. 1
121. EXISTING TRUSS LAYOUT NO. 2
122. EXISTING TRUSS DETAILS NO. 1
123. EXISTING TRUSS DETAILS NO. 2
124. EXISTING TRUSS DETAILS NO. 3
125. EXISTING TRUSS DETAILS NO. 4
126. EXISTING TRUSS DETAILS NO. 5
127. EXISTING TRUSS DETAILS NO. 6
128. EXISTING TRUSS DETAILS NO. 7
129. EXISTING TRUSS DETAILS NO. 8
130. EXISTING TRUSS DETAILS NO. 9
131. EXISTING TRUSS DETAILS NO. 10
132. SKID BENT LAYOUT (Note 2)
133. SKID BENT SECTIONS NO. 1
134. SKID BENT SECTIONS NO. 2
135. SKID BENT SECTIONS NO. 3
136. SKID BENT DETAILS NO. 1
137. SKID BENT DETAILS NO. 2
138. SKID BENT DETAILS NO. 3
139. SKID BENT DETAILS NO. 4
140. SKID BENT DETAILS NO. 5
141. SKID BENT DETAILS NO. 6
142. SKID BENT DETAILS NO. 7
143. SKID BENT DETAILS NO. 8
144. SKID BENT DETAILS NO. 9
145. SKID BENT DETAILS NO. 10
146. SKID BENT DETAILS NO. 11
147. SKID BEAM DETAILS NO. 1
148. SKID BEAM DETAILS NO. 2
149. SKID BEAM DETAILS NO. 3
150. SKID BEAM DETAILS NO. 4
151. SKID BEAM DETAILS NO. 5
152. SKID BEAM DETAILS NO. 6
153. SKID BEAM DETAILS NO. 7
154. SHEET NOT USED
155. ROLL-OUT ROLL-IN OPERATION SEQUENCE NO. 1
156. ROLL-OUT ROLL-IN OPERATION SEQUENCE NO. 2
157. ROLL-OUT ROLL-IN OPERATION SEQUENCE NO. 3
158. ROLL-OUT ROLL-IN OPERATION SEQUENCE NO. 4
159. ROLL-OUT ROLL-IN OPERATION SEQUENCE NO. 5
160. ROLL-OUT ROLL-IN OPERATION SEQUENCE NO. 6
161. ROLL-OUT ROLL-IN TOLERANCES AND DEFLECTIONS
162. EXISTING YBA TRUSS LIFTING PROCEDURE
163. NEW ETI TRUSS SETTING PROCEDURE
164. TEMPORARY BEARING LAYOUT
165. TEMPORARY BEARING DETAILS
166. EXISTING YBA TRUSS WORK PLAN NO. 1
167. EXISTING YBA TRUSS WORK PLAN NO. 2
168. TO 200. SHEET NOT USED
201. LOG OF TEST BORINGS NO. 1 (Note 1)
202. LOG OF TEST BORINGS NO. 2
203. LOG OF TEST BORINGS NO. 3
204. LOG OF TEST BORINGS NO. 4
205. LOG OF TEST BORINGS NO. 5
206. LOG OF TEST BORINGS NO. 6
207. LOG OF TEST BORINGS NO. 7
208. LOG OF TEST BORINGS NO. 8
209. LOG OF TEST BORINGS 1 OF 17
210. LOG OF TEST BORINGS 3 OF 17
211. LOG OF TEST BORINGS 5 OF 17
212. LOG OF TEST BORINGS 6 OF 17
213. LOG OF TEST BORINGS 16 OF 17
214. LOG OF TEST BORINGS 17 OF 17

Caltrans Metric

DIST	COUNTY	ROUTE	KILOMETER POST	TOTAL PROJECT	SHEET NO.	TOTAL SHEETS
04	SF	80	12.6/13.2		2	214

REGISTERED CIVIL ENGINEER — 3-15-08 — PLANS APPROVAL DATE

REGISTERED PROFESSIONAL ENGINEER — MOSHEN TUTEJA — No. C39201 — EXP. 06/30/09 — CIVIL — STATE OF CALIFORNIA

The State of California or its officers or agents shall not be responsible for the accuracy or completeness of electronic copies of this plan sheet.

T.Y. LIN / MOFFATT & NICHOL
Two Harrison Street, Suite 500
San Francisco, CA 94105

CONTRACT NO. 04-0120R4

CONTRACT CHANGE ORDER NO. 116

SHEET 17 OF 39

Notes:

1. Sheets pertaining to 100% Concrete Substructure submittal (Submittal Date 11-5-07).
2. Sheets pertaining to 100% Skid Bent and Skid Beam submittal (Submittal Date 3-15-08).

ALL DIMENSIONS ARE IN MILLIMETERS UNLESS OTHERWISE SHOWN

SAN FRANCISCO OAKLAND BAY BRIDGE
EAST SPAN SEISMIC SAFETY PROJECT

EAST TIE-IN

INDEX TO PLANS

	BY	CHECKED
DESIGN	N. Soh	S. Cheng
DETAILS	S. Lee	A. Lee
QUANTITIES	H. Nelson	A. Lee

PREPARED FOR THE STATE OF CALIFORNIA
DEPARTMENT OF TRANSPORTATION

M. Soh — PROJECT ENGINEER
S. Addas — PROJECT MANAGER

BRIDGE NO. 34-0006 (TEMP.)
KILOMETER POST 12.6

CU
EA 0120R4

T. Datrom/M. Whiteside/A. Akinsanya
DESIGN OVERSIGHT

SIGN OFF DATE

DESIGN DETAIL SHEET SETMOIREV. 3/1/98
@DATE@ @TIME@ Pen Table File

ORIGINAL SCALE IN MILLIMETERS FOR REDUCED PLANS

DISREGARD PRINTS BEARING EARLIER REVISION DATES

REVISION DATES (PRELIMINARY STAGE ONLY)

SHEET 2 OF 214

FILE = s:\PS\SBRM\4-0120R4\ETI\Admin\ITD-1.dgn

DIST	COUNTY	ROUTE	KILOMETER POST TOTAL PROJECT	SHEET No.	TOTAL
04	SF	80	12.6/13.2		214

REGISTERED CIVIL ENGINEER

3-15-06

PLANS APPROVAL DATE

The State of California or its officers or agents shall not be responsible for the accuracy or completeness of electronic copies of this plan sheet.

REGISTERED PROFESSIONAL ENGINEER Richard V. Nutt No. C 20665 Exp. 9/30/09 CIVIL STATE OF CALIFORNIA

T.Y. LIN / MOFFATT & NICHOL
Two Harrison Street, Suite 500
San Francisco, CA 94105

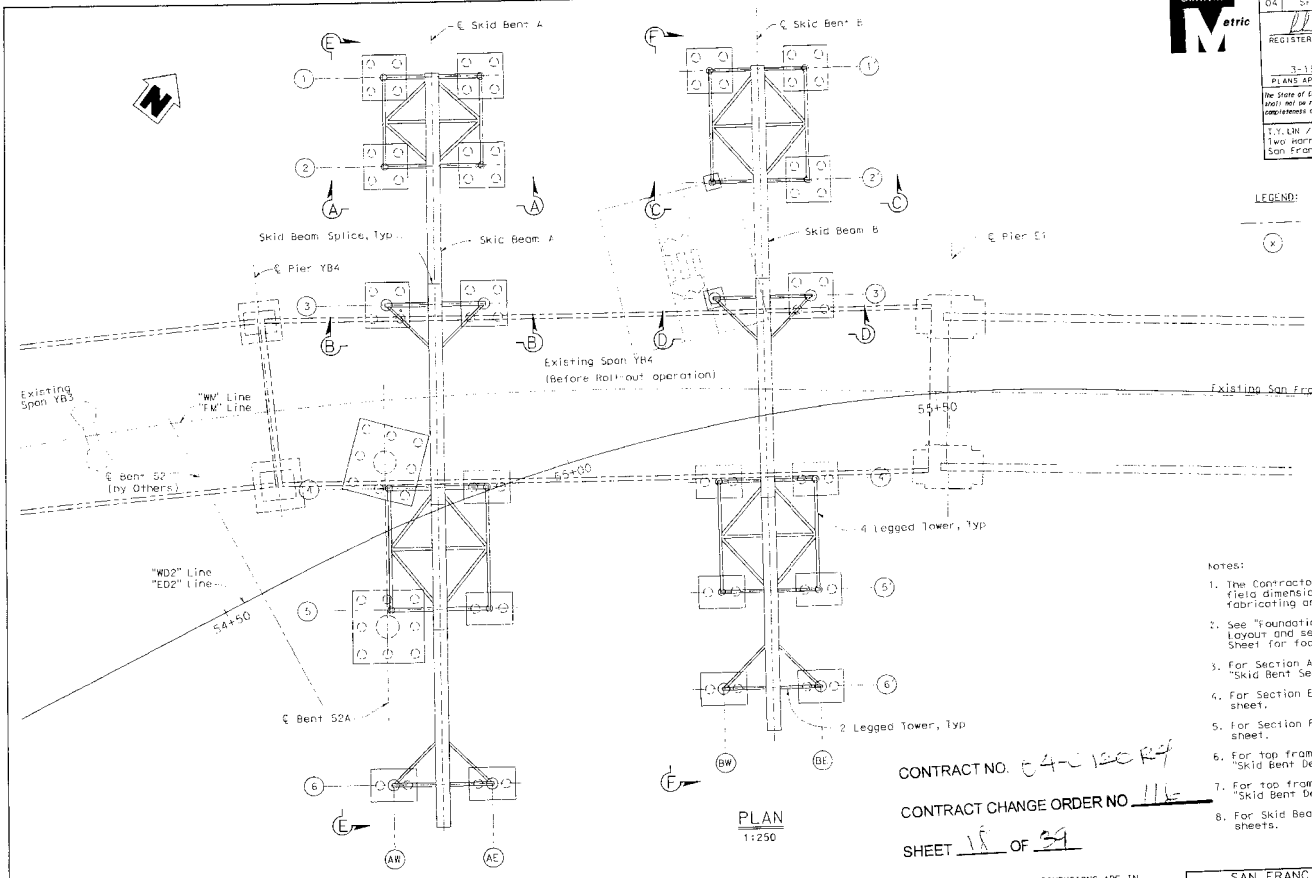

PLAN
1:250

LEGEND:

Indicates Existing Structure

(x) Indicates Grid Line

Notes:

1. The Contractor shall verify all controlling field dimensions before ordering or fabricating any material.
2. See "Foundation Plan" sheet for footing Layout and see "Skid Bent Footing Details" Sheet for footing sizes.
3. For Section A-A, B-B, C-C and D-D, see "Skid Bent Sections No. 1" sheet.
4. For Section E-E, see "Skid Bent Sections No. 2" sheet.
5. For Section F-F, see "Skid Bent Sections No. 3" sheet.
6. For top framing plan of 4 Legged Towers, see "Skid Bent Details No. 4 thru 6" sheets.
7. For top framing plan of 2 Legged Towers, see "Skid Bent Details No. 10 and 11" sheets.
8. For Skid Beam details, see "Skid Beam Details" sheets.

CONTRACT NO. 04-0120R4

CONTRACT CHANGE ORDER NO 116

SHEET 18 OF 39

ALL DIMENSIONS ARE IN MILLIMETERS UNLESS OTHERWISE SHOWN

SAN FRANCISCO OAKLAND BAY BRIDGE
EAST SPAN SEISMIC SAFETY PROJECT

EAST TIE-IN

SKID BENT LAYOUT

T. Ostrom/M. Whiteside/A. Akinsanya
DESIGN OVERSIGHT

SIGN OFF DATE

DESIGN DETAIL SHEET (METRIC) REV. 3/1/98
DATE TIME Pen Table File

	BY	CHECKED
DESIGN	R. Nutt, S. Singh	S. Chang, H. Najm
DETAILS	A. Sudhousen	A. Lee
QUANTITIES	H. Nelson	A. Lee

PREPARED FOR THE STATE OF CALIFORNIA DEPARTMENT OF TRANSPORTATION

M. Soh
PROJECT ENGINEER
S. Abbas
PROJECT MANAGER

BRIDGE NO. 34-0006 (TEMP)
KILOMETER POST 12.6

CU
EA 012084

DISREGARD PRINTS BEARING EARLIER REVISION DATES

REVISION DATES (PRELIMINARY STAGE ONLY)

SHEET 132 OF 214

ORIGINAL SCALE IN MILLIMETERS FOR REDUCED PLANS 0 10 20 30 40 50 60 70 80 90 100

FILE =/pt/bb\04-0120\ett\dgn\dsb101.dgn

100% PS&E

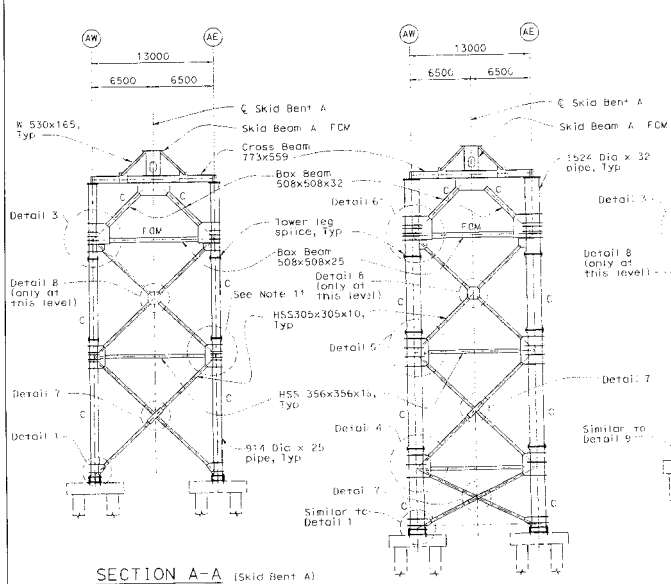

SECTION A-A (Skid Bent A)
1:200
Bent (2) shown
Bents (1), (4) & (5) similar

SECTION B-B (Skid Bent A)
1:200
Bent (3) shown
Bent (6) similar

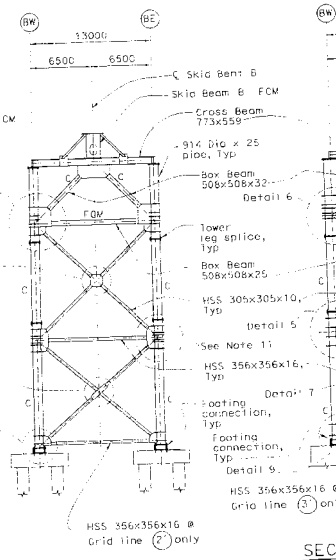

SECTION C-C (Skid Bent B)
1:200
Bent (2) shown
Bents (1), (4) & (5) similar

SECTION D-D (Skid Bent B)
1:200
Bent (3) shown
Bent (6) similar

LEGEND:

FCM Indicates Fracture Critical Member.

C Indicates Main Members in Compression.

Primary Components of Main Members are flanges, webs, splice plates and cover plates, transverse and longitudinal stiffeners and bearing stiffeners.

WELDING NOTES:

1. All structural plate interface connections shall be made with continuous complete joint penetration (CJP) welds, unless otherwise shown.

Notes:

1. The Contractor shall verify all controlling field dimensions before ordering or fabricating any material.
2. All bolts shall be 32 Dia A325, unless noted otherwise. For hole size, minimum spacing, edge distance and end distance, see "General Notes No. 2" sheet.
3. For Detail 1, see "Skid Bent Details No. 2" sheet.
4. For Detail 3, see "Skid Bent Details No. 3" sheet.
5. For Details 4 and 5, see "Skid Bents Details No. 8" sheet.
6. For Details 6 thru 9, see "Skid Bent Details No. 9" sheet.
7. For tower leg splice details, see "Skid Bent Details No. 1" sheet.
8. For footing connection details, see "Skid Bent Details No. 1" sheet.
9. For Skid Bent heights, see "Skid Bent Sections No. 2 and 3" sheets.
10. For Skid Beam details, see "Skid Beam Details" sheets.
11. For Detail, see Section C-C on "Skid Bent Details No. 7" sheet.

CONTRACT NO. 04-0120R4

CONTRACT CHANGE ORDER NO. 116

SHEET 19 OF 39

DIST	COUNTY	ROUTE	KILOMETER POST / TOTAL PROJECT	SHEET NO.	TOTAL
04	SF	BC	12.6/13.2		214

REGISTERED CIVIL ENGINEER — Richard V. Nutt, No. C 20662, Exp. 9/30/08, CIVIL, State of California

3-15-05
PLANS APPROVAL DATE

The State of California or its officers or agents shall not be responsible for the accuracy or completeness of electronic copies of this plan sheet.

T.Y.LIN / MOFFATT & NICHOL
Two Harrison Street, Suite 500
San Francisco, CA 94105

ALL DIMENSIONS ARE IN MILLIMETERS UNLESS OTHERWISE SHOWN

SAN FRANCISCO OAKLAND BAY BRIDGE
EAST SPAN SEISMIC SAFETY PROJECT

EAST TIE-IN

SKID BENT SECTIONS NO. 1

	BY	CHECKED
DESIGN	R. Nutt, S. Singh	S. Cheng, H. Noji
DETAILS	A. Suchausen	A. Lee
QUANTITIES	H. Nelson	A. Lee

PREPARED FOR THE STATE OF CALIFORNIA
DEPARTMENT OF TRANSPORTATION

M. Soh — PROJECT ENGINEER
S. Addas — PROJECT MANAGER

BRIDGE NO. 34-0006 (TEMP)
KILOMETER POST 12.6

CU EA 0120R4

DISREGARD PRINTS BEARING EARLIER REVISION DATES

REVISION DATES (PRELIMINARY STAGE ONLY)

SHEET 133 OF 214

T. Ostrom/M. Whiteside/A. Akinsanya
DESIGN OVERSIGHT

SIGN OFF DATE

ORIGINAL SCALE IN MILLIMETERS FOR MEDIUM PLANS

TITLE = P:\pw\bb\04-0T2001\elf\dgn\stsbk01.dgn

DESIGN DETAIL SHEET (METRIC) rev. 3/1/99
DATE: TIME: Pen Table File

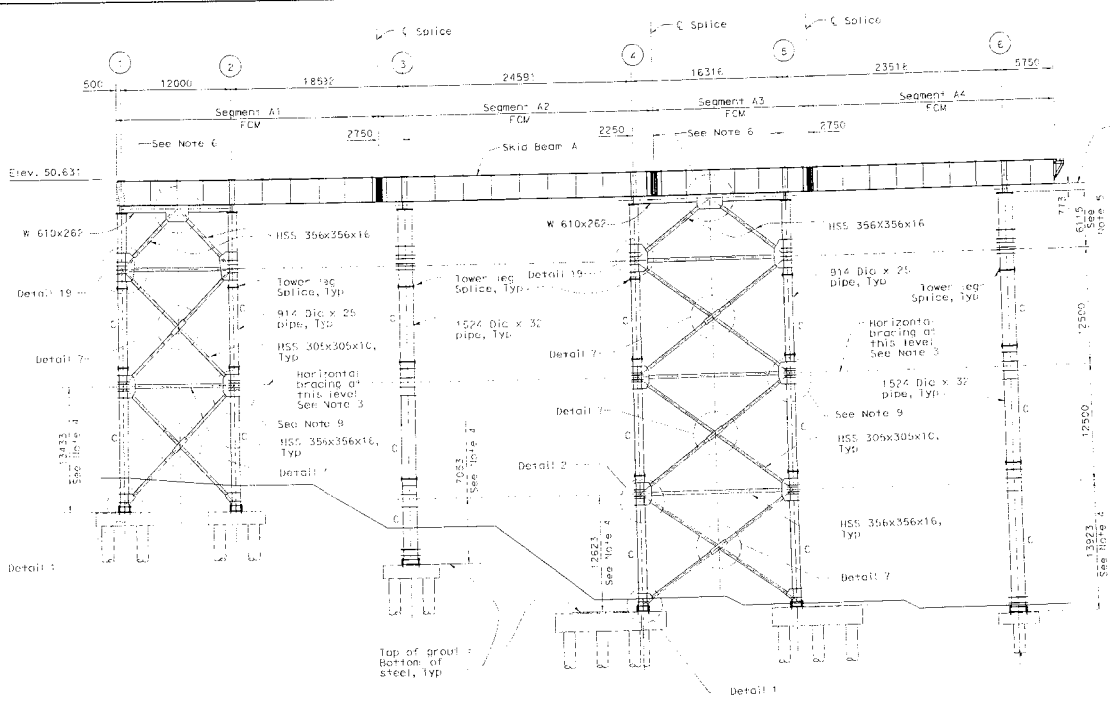

SECTION E-E

1:200
(Skid Bent A)
Grid (AW) shown
Grid (AE) similar

CONTRACT NO. 04-0120R4

CONTRACT CHANGE ORDER NO. 116

SHEET 20 OF 39

LEGEND:

FCM Indicates Fracture Critical Member.

℄ Indicates Main Members in Compression.

Primary Components of Main Members are flanges, splice plates and cover plates, transverse welds, splice plates and cover plates, transverse and longitudinal stiffeners and bearing stiffeners.

WELDING NOTES:

1. All structural plate interface connections shall be made with continuous complete joint penetration (CJP) welds, unless otherwise shown.

Notes:

1. The Contractor shall verify all controlling field dimensions before ordering or fabricating any material.
2. All bolts shall be 32 Dia A325, unless noted otherwise. For hole size, minimum spacing, edge distance and end distance, see "General Notes No. 2" sheet.
3. For horizontal bracing details, see "Skid Bent Details No. 7" sheet.
4. Dimensions shown to bottom of steel base plate.
5. Dimensions shown to top of steel cap plate.
6. For Detail, see Section S-S on "Skid Bent Details No. 4" sheet.
7. For Detail 1, see "Skid Bent Details No. 2" sheet.
8. For Detail 2, see "Skid Bent Details No. 2" sheet.
9. For Detail, see Section C-C on "Skid Bent Details No. 7" sheet.
10. For Detail 7, see "Skid Bent Details No. 9" sheet.
11. For Detail 19, see "Skid Bent Details No. 3" sheet.

Caltrans Metric

REGISTERED CIVIL ENGINEER — Richard Y. Nutt — No. C 20682 — CIVIL — STATE OF CALIFORNIA — 9/30/09

3-15-05
PLANS APPROVAL DATE

The State of California or its officers or agents shall not be responsible for the accuracy or completeness of electronic copies of this plan sheet.

T.Y.LIN / MOFFATT & NICHOL
Two Harrison Street, Suite 500
San Francisco, CA 94105

ALL DIMENSIONS ARE IN MILLIMETERS UNLESS OTHERWISE SHOWN

SAN FRANCISCO OAKLAND BAY BRIDGE
EAST SPAN SEISMIC SAFETY PROJECT

EAST TIE-IN

SKID BENT SECTIONS NO. 2

T. Ostrom/M. Whitestone/A. Akinsanya
DESIGN OVERSIGHT

SIGN OFF DATE

DESIGN DETAIL SHEET METRIC (REV. 3/1/96)
@DATE@ @TIME@ Pen Table File

	BY	CHECKED
DESIGN	R. Nutt, S. Singh	S. Cheng, H. Hajia
DETAILS	A. Sudhausen	A. Lee
QUANTITIES	H. Nelson	A. Lee

PREPARED FOR THE STATE OF CALIFORNIA DEPARTMENT OF TRANSPORTATION

M. Son — PROJECT ENGINEER
S. Abbas — PROJECT MANAGER

CU 04-0120R4
EA 0120R4

BRIDGE NO. 34-0006 (TEMP)
KILOMETER POST 12.6

DISREGARD PRINTS BEARING EARLIER REVISION DATES

REVISION DATES (PRELIMINARY STAGE ONLY)
11/2001 3/2005

SHEET 134 OF 214

ORIGINAL SCALE IN MILLIMETERS FOR REVISED PLANS: 0 10 20 30 40 50 60 70 80 90 100

FILE =s:\pw\bb\ea-0120r4\en\bgn\en06s02.dgn

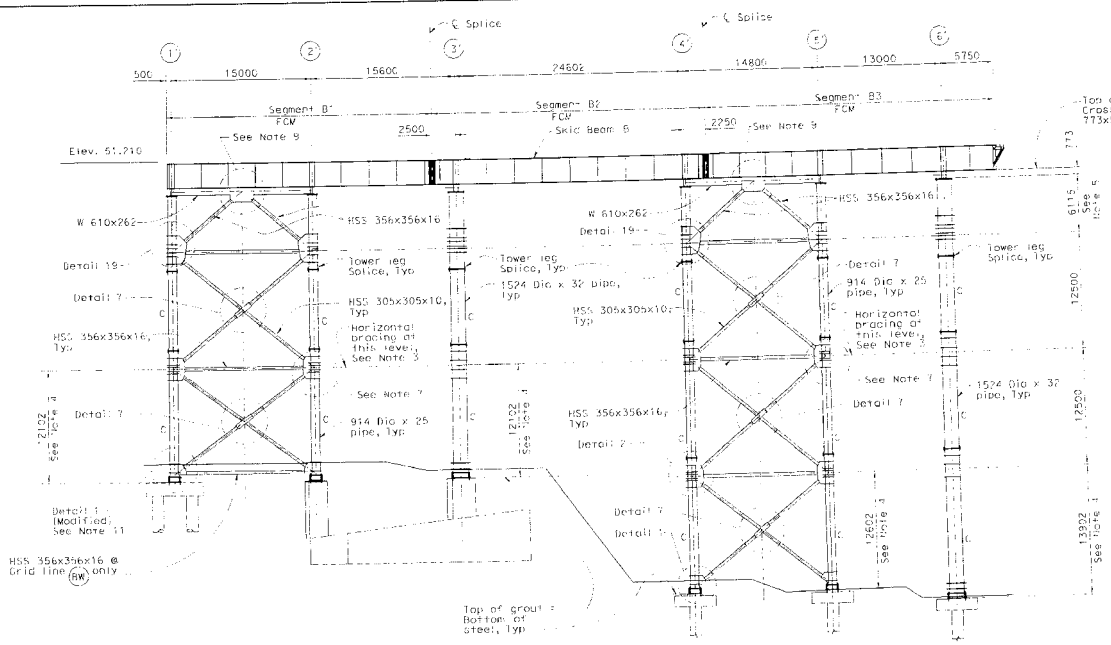

SECTION F-F

1:200

(Skid Bent B)

Grid (BW) shown

Grid (BE) similar

CONTRACT NO. 04-0120R4

CONTRACT CHANGE ORDER NO 116

SHEET 21 OF 39

LEGEND:

FCM Indicates Fracture Critical Member.

C Indicates Main Members in Compression.

Primary Components of Main Members are flanges, webs, splice plates and cover plates, transverse and longitudinal stiffeners and bearing stiffeners.

WELDING NOTES:

1. All Structural plate interface connections shall be made with continuous complete joint penetration (CJP) welds, unless otherwise shown.

Notes:

1. The Contractor shall verify all controlling field dimensions before ordering or fabricating any material.
2. All bolts shall be 32 Dia A325, unless noted otherwise. For hole size, minimum spacing, edge distance and end distance, see "General Notes No. 1" sheet.
3. For horizontal bracing details, see "Skid Bent Details No. 7" sheet.
4. Dimensions shown to bottom of steel base plate.
5. Dimensions shown to top of steel cap plate.
6. For Details 1 and 2, see "Skid Bent Details No. 2" sheet.
7. For Detail, see Section C-C on "Skid Bent Details No. 7" sheet.
8. For Details 19, see "Skid Bent Details No. 3" sheet.
9. For Detail, see Section S-S on "Skid Bent Details No. 4" sheet.
10. For Detail 7, see "Skid Bent Detail No. 9" sheet.
11. For Detail 1 (modifed), work Detail 1 with Detail 9 on "Skid Bent Details No. 9" sheet when horizontal member is present.

REGISTERED CIVIL ENGINEER — Richard V. Nutt, No. C 20661, Exp. 9/30/09, CIVIL, State of California

3-15-08
PLANS APPROVAL DATE

The State of California or its officers or agents shall not be responsible for the accuracy or completeness of electronic copies of this plan sheet.

T.Y.LIN / MOFFATT & NICHOL
Two Harrison Street, Suite 500
San Francisco, CA 94105

ALL DIMENSIONS ARE IN MILLIMETERS UNLESS OTHERWISE SHOWN

SAN FRANCISCO OAKLAND BAY BRIDGE
EAST SPAN SEISMIC SAFETY PROJECT

EAST TIE-IN

SKID BENT SECTIONS NO. 3

T. Ostrom/M. Whiteside/A. Akinsanya	DESIGN	BY R. Nutt, S. Singh	CHECKED S. Chang, H. Nojh
DESIGN OVERSIGHT	DETAILS	BY A. Sudhausen	CHECKED A. Lee
SIGN OFF DATE	QUANTITIES	BY Y. Nelson	CHECKED A. Lee

PREPARED FOR THE STATE OF CALIFORNIA DEPARTMENT OF TRANSPORTATION

M. Sah — PROJECT ENGINEER
S. Abbas — PROJECT MANAGER

CU EA 0120R4

BRIDGE NO. 34-0006 (TSMP1)
KILOMETER POST 12.6

DISREGARD PRINTS BEARING EARLIER REVISION DATES

REVISION DATES (PRELIMINARY STAGE ONLY)

DESIGN DETAIL SHEET (ATTACH) REV. 3/1/98
SCALE: 1" = 1m Pen Table File

ORIGINAL SCALE IN MILLIMETERS FOR REDUCED PLANS 0 10 20 30 40 50 60 70 80 90 100

FILE => p:\bb\04-0120r4\ar1\dgn\dsbs03.dgn

SHEET 135 OF 214

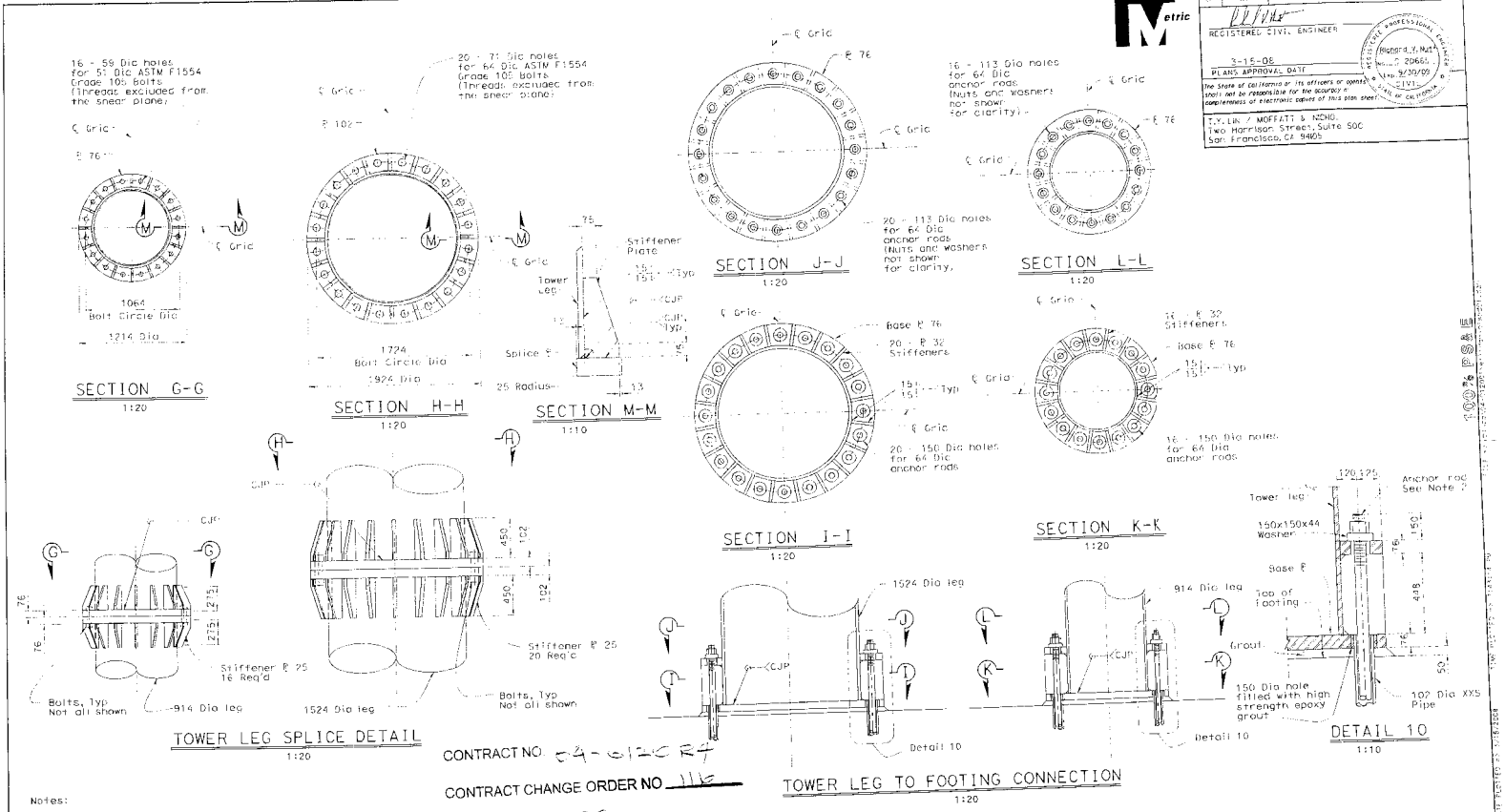

Caltrans Metric

DIST	COUNTY	ROUTE	KILOMETER POST	SHEET NO.	TOTAL SHEETS
04	SF	80	13.0/13.2		214

REGISTERED CIVIL ENGINEER — Richard Y. Nutt, No. C 20661, Exp. 9/30/09, CIVIL, State of California

3-15-06
PLANS APPROVAL DATE

The State of California or its officers or agents shall not be responsible for the accuracy or completeness of electronic copies of this plan sheet.

T.Y. LIN / MOFFATT & NICHOL
Two Harrison Street, Suite 500
San Francisco, CA 94105

Contract Change Order No. 116

CONTRACT NO. 04-0120R4

SHEET 32 OF 39

Notes:

1. The Contractor shall verify all controlling field dimensions before ordering or fabricating any materials.
2. For anchor rod details, see "Skid Bent Footing Details No. 2" sheet.

ALL DIMENSIONS ARE IN MILLIMETERS UNLESS OTHERWISE SHOWN

SAN FRANCISCO OAKLAND BAY BRIDGE
EAST SPAN SEISMIC SAFETY PROJECT

EAST TIE-IN

SKID BENT DETAILS NO. 1

	BY	CHECKED
DESIGN	R. Nutt, S. Singh	S. Cheng, H. Holm
DETAILS	A. Sudhausen	A. Lee
QUANTITIES	H. Nelson	A. Lee

PREPARED FOR THE STATE OF CALIFORNIA
DEPARTMENT OF TRANSPORTATION

M. Son — PROJECT ENGINEER
S. Abbas — PROJECT MANAGER

BRIDGE NO. 34-0006 TEMP
KILOMETER POST 12.6

CU EA 0120R4

T. Ostrom/M. Whiteside/A. Akinsanya
DESIGN OVERSIGHT

SIGN OFF DATE

DESIGN DETAIL SHEET (METRIC) (REV. 3/4/98)
#DATE# #TIME# Pen Table File

ORIGINAL SCALE IN MILLIMETERS FOR REDUCED PLANS
0 10 20 30 40 50 60 70 80 90 100

DISREGARD PRINTS BEARING EARLIER REVISION DATES

REVISION DATES (PRELIMINARY STAGE ONLY)					DRAWING NO.	SHEET NO.	OF
ISSUED	ISSUED					136	214

TRUE = P:\pw\04-013051\e1\dgn\s016d001.dgn

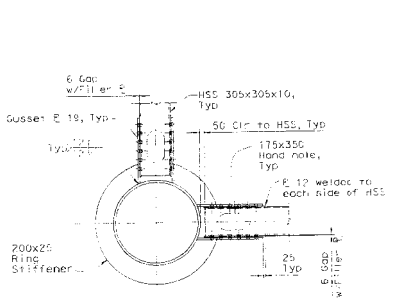

SECTION N-N
1:20

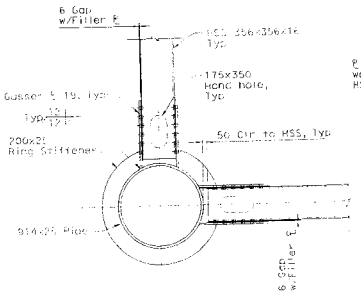

SECTION O-O
1:20

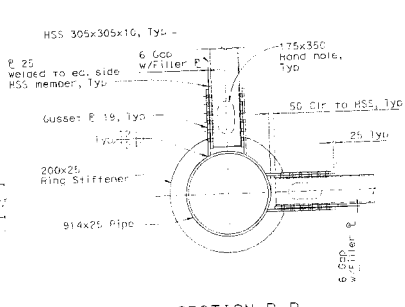

SECTION P-P
1:20

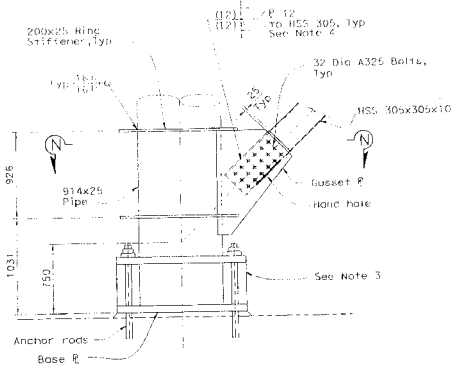

DETAIL 1
1:20

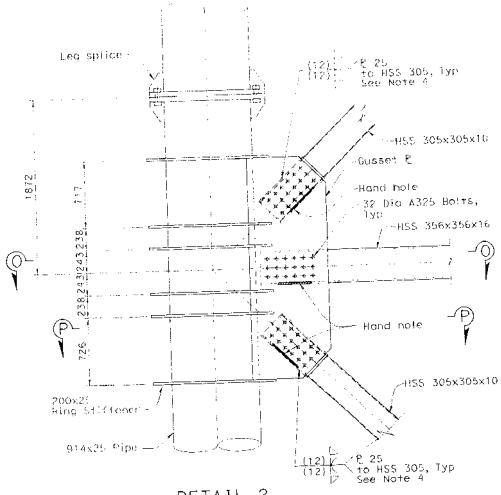

DETAIL 2
1:20

Notes:

1. The Contractor shall verify all controlling field dimensions before ordering or fabricating any material.
2. All bolts shall be 32 Dia A325, unless noted otherwise. For hole size, minimum spacing, edge distance and end distance, see "General Notes No. 2" sheet.
3. For anchor details, see "Skid Bent Footing Details No. 2" sheet.
4. All welded spacer plates on HSS 305 members to be 356mm wide and extend from end of member to 25mm beyond gusset.

DIST	COUNTY	ROUTE	KILOMETER POST TOTAL PROJECT	SHEET NO.	TOTAL
04	SF	80	12.6/13.2		214

REGISTERED CIVIL ENGINEER

3-15-08
PLANS APPROVAL DATE

The State of California or its officers or agents shall not be responsible for the accuracy or completeness of electronic copies of this plan sheet.

T.Y. LIN / MOFFATT & NICHOL
Two Harrison Street, Suite 500
San Francisco, CA 94105

CONTRACT NO. 04-0120R4

CONTRACT CHANGE ORDER NO. 116

SHEET 25 OF 35

DESIGN	R. Nutt, S. Singh	CHECKED	S. Cheng, K. Najm
DETAILS	A. Sudhausen	CHECKED	A. Lee
QUANTITIES	H. Nelson	CHECKED	A. Lee

PREPARED FOR THE STATE OF CALIFORNIA
DEPARTMENT OF TRANSPORTATION

M. Sch
PROJECT ENGINEER
S. Abbas
PROJECT MANAGER

CU
EA 012084

BRIDGE NO. 34-0006 (TEMP)
KILOMETER POST 12.6

DISREGARD PRINTS BEARING EARLIER REVISION DATES

ALL DIMENSIONS ARE IN MILLIMETERS UNLESS OTHERWISE SHOWN

SAN FRANCISCO OAKLAND BAY BRIDGE
EAST SPAN SEISMIC SAFETY PROJECT

EAST TIE-IN

SKID BENT DETAILS NO. 2

T. Ostrom/M. Whiteside/A. Akinsanya
DESIGN OVERSIGHT

SIGN OFF DATE

REVISION DATES (PRELIMINARY STAGE ONLY)

DATE | DATE | DATE

SHEET 137 OF 214

DESIGN DETAIL SHEET RETRO (REV. 3/1/98)
@DATE@ @TIME@ Pen Table File

ORIGINAL SCALE IN MILLIMETERS FOR REDUCED PLANS

FILE => p:\ab\04-012084\plt\sdgn\g15sbd07.dgn

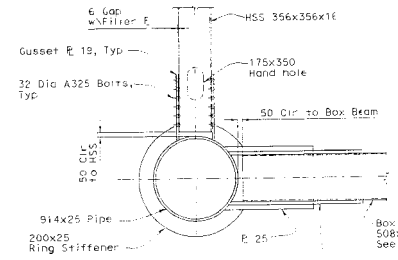

SECTION Q-Q
1:20

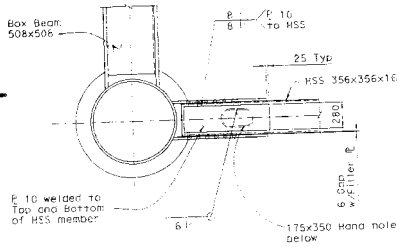

SECTION q-q
1:20

CONTRACT NO. 04-0C120 R4

CONTRACT CHANGE ORDER NO. 116

SHEET 24 OF 34

NOTES:

1. The Contractor shall verify all controlling field dimensions before ordering or fabricating any material.
2. All bolts shall be 32 Dia A325, unless noted otherwise. For hole size, minimum spacing, edge distance and end distance, see "General Notes No. 2" sheet.
3. Longitudinal members not shown for clarity.
4. Built-up Box Beam plate elements to be joined by continuous CJP welds with steel backing.
5. All welded spacer plates on HSS 305 members to be 356mm wide and extend from end of member to 25mm beyond gusset.

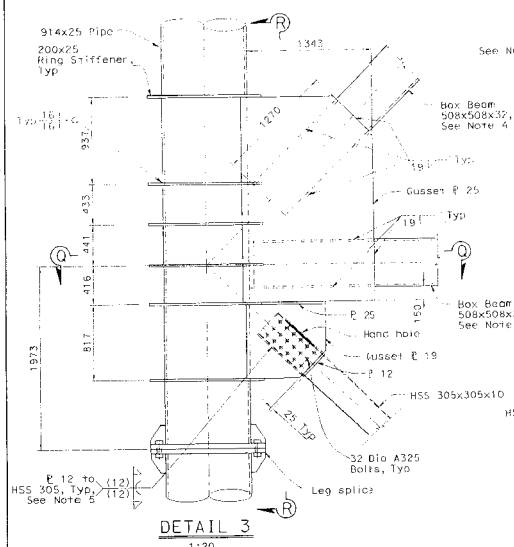

DETAIL 3
1:20

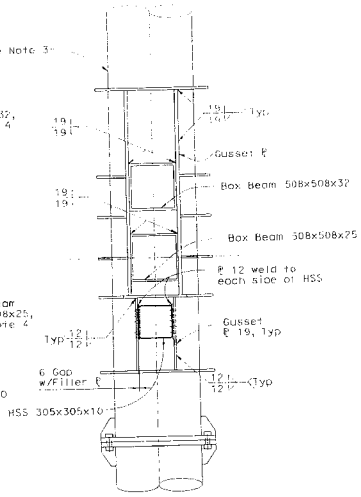

SECTION R-R
1:20

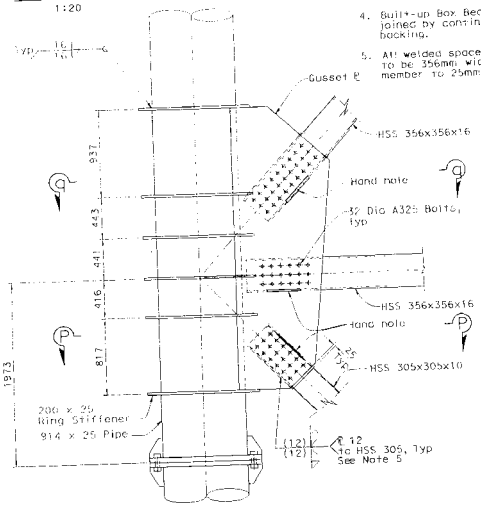

DETAIL 19
1:20

ALL DIMENSIONS ARE IN MILLIMETERS UNLESS OTHERWISE SHOWN

DISTRICT	COUNTY	ROUTE	KILOMETER POST TOTAL PROJECT	SHEET NO.	TOTAL
04	SF	80	12.6/13.2		214

REGISTERED CIVIL ENGINEER

3-15-08
PLANS APPROVAL DATE

The State of California or its officers or agents shall not be responsible for the accuracy or completeness of electronic copies of this plan sheet.

T.Y.LIN / MOFFATT & NICHOL
Two Harrison Street, Suite 500
San Francisco, CA 94105

SAN FRANCISCO OAKLAND BAY BRIDGE
EAST SPAN SEISMIC SAFETY PROJECT

EAST TIE-IN

SKID BENT DETAILS NO. 3

	BY	CHECKED
DESIGN	R. Nutt, S. Singh	S. Cheng, H. Najm
DETAILS	A. Sudhausen	A. Lee
QUANTITIES	H. Nelson	A. Lee

PREPARED FOR THE STATE OF CALIFORNIA
DEPARTMENT OF TRANSPORTATION

M. Soh
PROJECT ENGINEER
S. Abbas
PROJECT MANAGER

BRIDGE NO. 34-0006 (TEMP)
KILOMETER POST 12.6

CU
EA 0120R4

DISREGARD PRINTS BEARING EARLIER REVISION DATES

REVISION DATES (PRELIMINARY STAGE ONLY)

SHEET 138 OF 214

T. Detrom/M. Whiteside/A. Akinsanya
DESIGN OVERSIGHT

SIGN OFF DATE

ORIGINAL SCALE IN MILLIMETERS FOR REDUCED PLANS

FILE =j:\pr\sb\d4-012001\ert\dgn\d4sb003.dgn

DESIGN DETAIL SHEET (METRIC) REV. 3/4/98
DATE *TIME* Pen Table File

DATE PLOTTED = 3/13/2008 TIME PLOTTED = 11:31:19

DIST	COUNTY	ROUTE	KILOMETER POST TOTAL PROJECT	SHEET NO.	TOTAL
04	SF	80	12.6/13.2		214

REGISTERED CIVIL ENGINEER

3-15-08

PLANS APPROVAL DATE

The State of California or its officers or agents shall not be responsible for the accuracy or completeness of electronic copies of this plan sheet.

REGISTERED PROFESSIONAL ENGINEER Richard V. Nutt No. C 20665 Exp. 9/30/09 CIVIL STATE OF CALIFORNIA

T.Y. LIN / MOFFATT & NICHOL
Two Harrison Street, Suite 500
San Francisco, CA 94105

Notes:

1. The Contractor shall verify all controlling field dimensions before ordering or fabricating any material.
2. All bolts shall be 32 Dia A325, unless noted otherwise. For hole size, minimum spacing, edge distance and end distance, see "General Notes No. 2" sheet.
3. For detail 12, see "Skid Bent Details No. 5" sheet.
4. For Detail 13, see "Skid Bent Details No. 6" sheet.

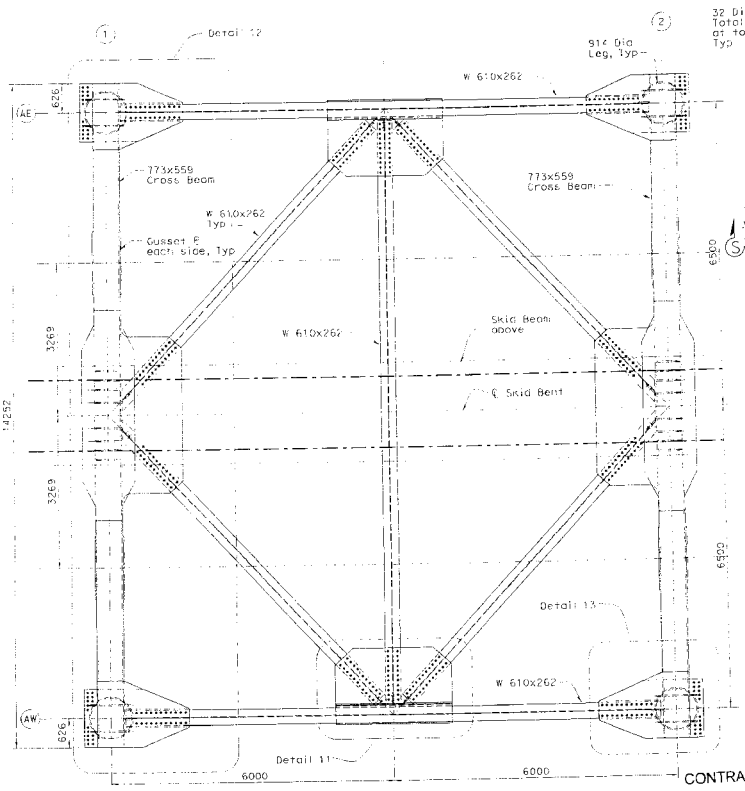

FOUR LEGGED TOWER TOP FRAMING PLAN

1:40

Skid Bent A Tower between Grids 1 & 2 shown.
All other four legged towers similar.

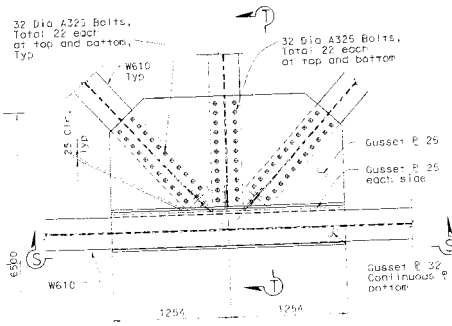

DETAIL 11

1:20

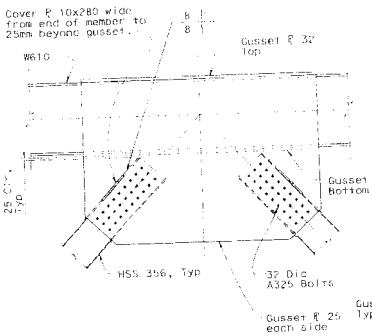

SECTION S-S

1:20

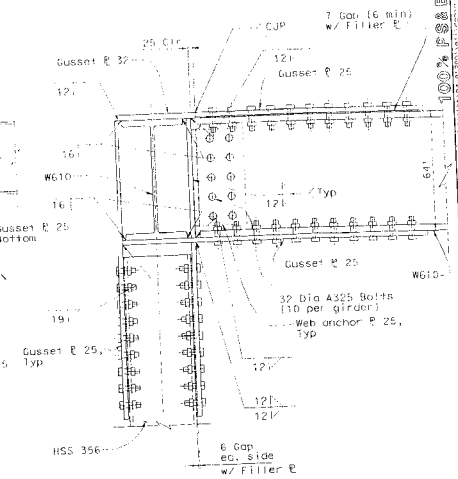

SECTION T-T

1:10

CONTRACT NO. 04-0120R4

CONTRACT CHANGE ORDER NO 116

SHEET 25 OF 39

ALL DIMENSIONS ARE IN MILLIMETERS UNLESS OTHERWISE SHOWN

SAN FRANCISCO OAKLAND BAY BRIDGE
EAST SPAN SEISMIC SAFETY PROJECT

EAST TIE-IN

SKID BENT DETAILS NO. 4

T. Ostrom/M. Whiteside/A. Akinsanya
DESIGN OVERSIGHT

SIGN OFF DATE

DESIGN DETAIL SHEET (METRIC) (REV. 3/1/98)
DATE *TIME* Pen Table File

DESIGN	BY R. Nutt, S. Singh	CHECKED S. Cheng, H. Najm	
DETAILS	BY A. Sudhausen	CHECKED A. Lee	
QUANTITIES	BY H. Nelson	CHECKED A. Lee	

ORIGINAL SCALE IN MILLIMETERS FOR REDUCED PLANS 0 10 20 30 40 50 60 70 80 90 100

PREPARED FOR THE STATE OF CALIFORNIA DEPARTMENT OF TRANSPORTATION

M. Soh
PROJECT ENGINEER
S. Abbas
PROJECT MANAGER

CU
EA 0120R4

BRIDGE NO. 34-0006 (TEMP)
KILOMETER POST 12.6

DISREGARD PRINTS BEARING EARLIER REVISION DATES

REVISION DATES (PROJ. ENTRY) STAGE (M.P.)

SHEET 139 OF 214

FILE => d:\bb\04-0120R4\ctr\dgn\sbd04.dgn

DIST	COUNTY	ROUTE	KILOMETER POST TOTAL PROJECT	SHEET NO.	TOTAL
04	SF	80	12.6/13.2		214

REGISTERED CIVIL ENGINEER

3-15-08

PLANS APPROVAL DATE

The State of California or its officers or agents shall not be responsible for the accuracy or completeness of electronic copies of this plan sheet.

REGISTERED PROFESSIONAL ENGINEER
Richard V. Nutt
No. C 20665
Exp. 9/30/09
CIVIL
STATE OF CALIFORNIA

T.Y. LIN / MOFFATT & NICHOL
Two Harrison Street, Suite 500
San Francisco, CA 94105

Notes:

1. The Contractor shall verify all controlling field dimensions before ordering or fabricating any material.
2. All bolts shall be 32 Dia A325, unless noted otherwise. For hole size, minimum spacing, edge distance and end distance, see "General Notes No. 2" sheet.
3. For Section X-Y, see "Skid Bent Details No. 6" sheet
4. For weld and filler plate requirements, see "Skid Beam Details No. 5" sheet.

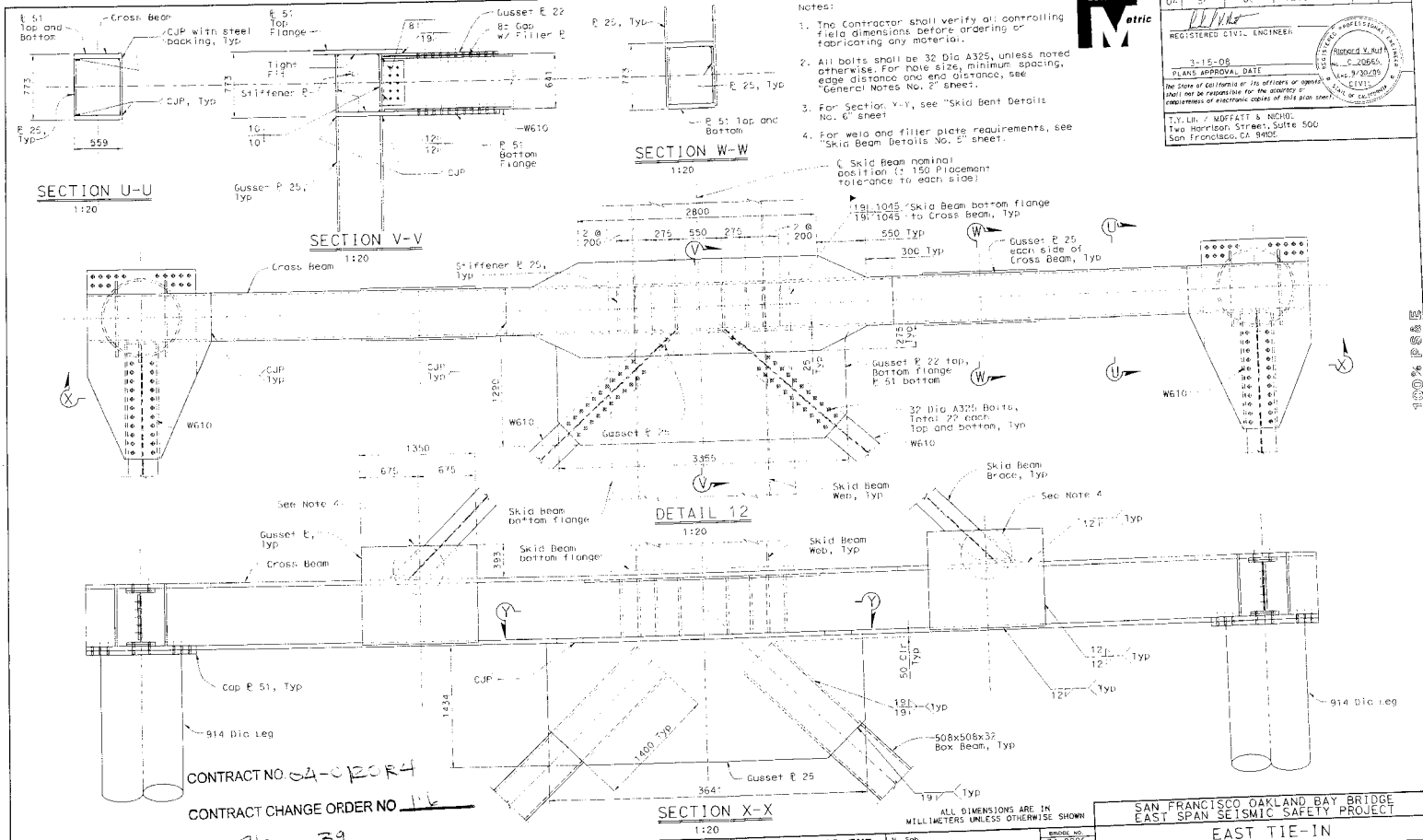

ALL DIMENSIONS ARE IN MILLIMETERS UNLESS OTHERWISE SHOWN

SAN FRANCISCO OAKLAND BAY BRIDGE
EAST SPAN SEISMIC SAFETY PROJECT

EAST TIE-IN

SKID BENT DETAILS NO. 5

DESIGN	BY R. Nutt, S. Singh	CHECKED S. Cheng, H. Naim	
DETAILS	BY A. Sudhausen	CHECKED A. Lee	
QUANTITIES	BY H. Nelson	CHECKED A. Lee	

PREPARED FOR THE STATE OF CALIFORNIA DEPARTMENT OF TRANSPORTATION

H. Soh
PROJECT ENGINEER
S. Abbas
PROJECT MANAGER

BRIDGE NO. 34-0006 (TEMP)
KILOMETER POST 12.6

CU
EA 012R4

DISREGARD PRINTS BEARING EARLIER REVISION DATES

REVISION DATES (PRELIMINARY STAGE ONLY)

SHEET 140 OF 214

T. Ostrom/M. Whiteside/A. Akinsanya
DESIGN OVERSIGHT

SIGN OFF DATE

DESIGN DETAIL SHEET METRIC REV. 3/1/98
$DATE$ $TIME$ Pen Table File

ORIGINAL SCALE IN MILLIMETERS FOR REDUCED PLANS

FILE => p:\bb\04-012001\eti\dgn\plsbd05.dgn

100% PS&E

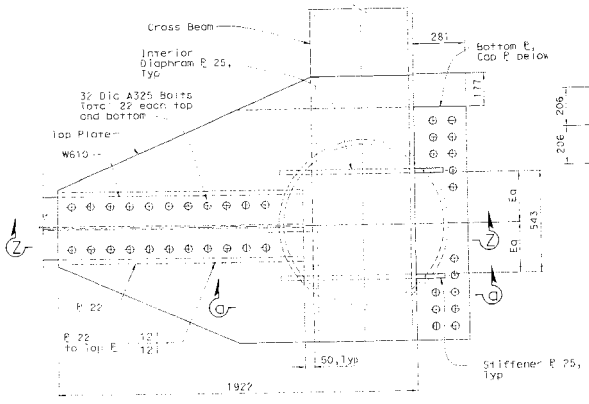

DETAIL 13
1:10

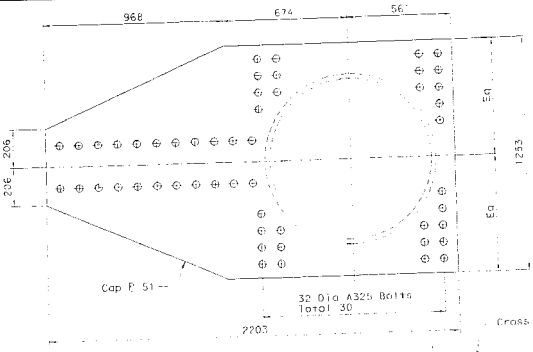

SECTION b-b
1:10

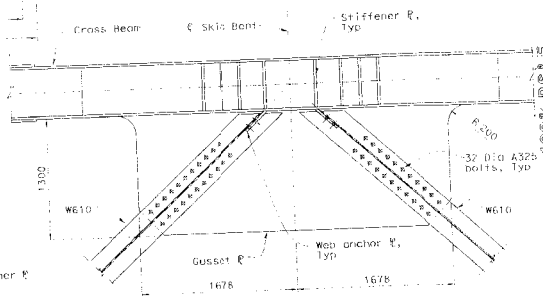

SECTION Y-Y
1:20

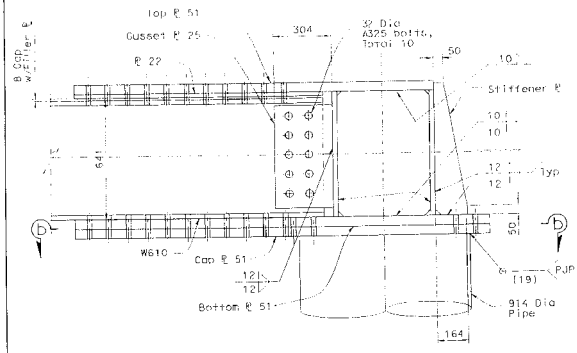

SECTION Z-Z
1:10

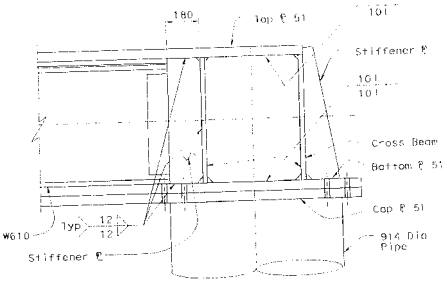

SECTION a-a
1:10

Notes:

1. The Contractor shall verify all controlling field dimensions before ordering or fabricating any material.
2. All bolts shall be 32 Dia A325, unless noted otherwise. For hole size, minimum spacing, edge distance and end distance, see "General Notes No. 2" sheet.

ALL DIMENSIONS ARE IN MILLIMETERS UNLESS OTHERWISE SHOWN

ORIGINAL SCALE IN MILLIMETERS FOR REDUCED PLANS 0 10 20 30 40 50 60 70 80 90 100

Caltrans Metric

DIST	COUNTY	ROUTE	POST MILE / PROJECT	SHEET NO.	TOTAL
04	SF	80	12.6/13.2	141	214

REGISTERED CIVIL ENGINEER

3-15-05
PLANS APPROVAL DATE

Richard V. Nutt, No. C 20665, Exp. 9/30/05, CIVIL, State of California

The State of California or its officers or agents shall not be responsible for the accuracy or completeness of electronic copies of this plan sheet.

T.Y. LIN / MOFFATT & NICHOL
Two Harrison Street, Suite 500
San Francisco, CA 94105

CONTRACT NO. 04-0120K4

CONTRACT CHANGE ORDER NO. 116

SHEET 27 OF 36

T. Ostrom/M. Whiteside/A. Akinsanya
DESIGN OVERSIGHT

SIGN OFF DATE

DESIGN DETAIL SHEET RETROGRAFX, 3/4/98
4DATE4 4TIME4 Man Table File

	BY	CHECKED	BY
DESIGN	R. Nutt, S. Singh	CHECKED	S. Cheng, H. Noja
DETAILS	A. Sudhausen	CHECKED	A. Lee
QUANTITIES	H. Nelson	CHECKED	A. Lee

PREPARED FOR THE STATE OF CALIFORNIA
DEPARTMENT OF TRANSPORTATION

M. Soh
PROJECT ENGINEER
S. Abbas
PROJECT MANAGER

CU 04-0120K4
EA 012084

TITLE =d:\bridges\04-012084\structdgn\sd06d06.dgn

BRIDGE NO. 34-0006 (TEMP)
EA 012084 P651
12.6

DISREGARD PRINTS BEARING EARLIER REVISION DATES

SAN FRANCISCO OAKLAND BAY BRIDGE
EAST SPAN SEISMIC SAFETY PROJECT

EAST TIE-IN

SKID BENT DETAILS NO. 6

REVISION DATES (PRELIMINARY STAGE ONLY)

DESIGN USER: S Singh
DATE PLOTTED = 3/15/2005

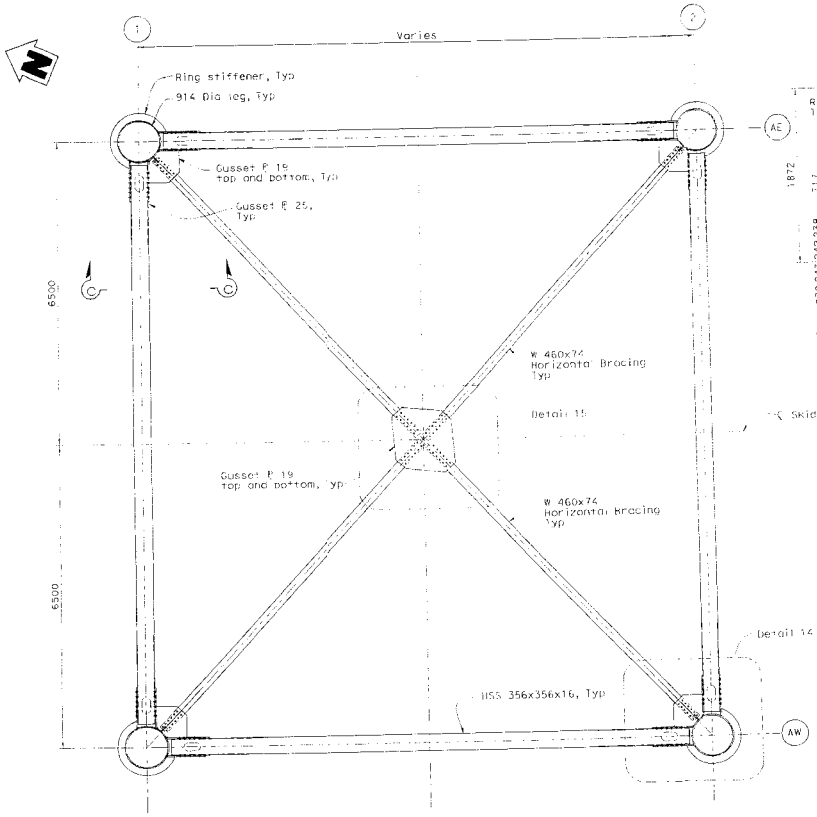

HORIZONTAL BRACING PLAN

1:40

Only Skid Bent A between Grids (1) & (2) shown
(Horizontal bracing similar at all other 4 legged towers)

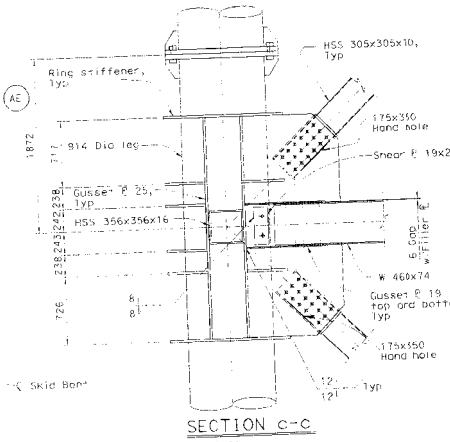

SECTION c-c

1:20

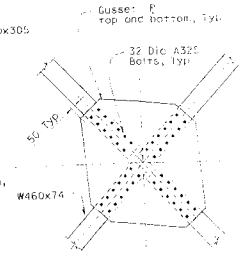

DETAIL 15

1:20

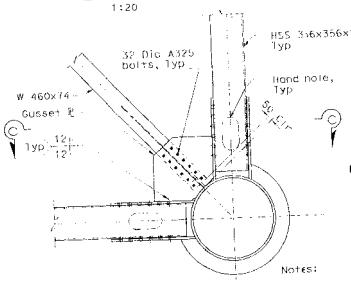

DETAIL 14

1:20

Notes:

1. The Contractor shall verify all controlling field dimensions before ordering or fabricating any material.
2. All bolts shall be 32 Dia A325, unless noted otherwise. For hole size, minimum spacing, edge distance and end distance, see "General Notes No. 2" sheet.

CONTRACT NO 04-0120R4

CONTRACT CHANGE ORDER NO 11C

SHEET 28 OF 59

DIST	COUNTY	ROUTE	POST MILE / KILOMETER POST	SHEET NO.	TOTAL SHEETS
04	SF	80	10.6/13.2	214	

REGISTERED CIVIL ENGINEER — Edward Y. Nutt, No. C 20661, Exp. 9/30/09, CIVIL, State of California

3-15-06
PLANS APPROVAL DATE

The State of California or its officers or agents shall not be responsible for the accuracy or completeness of electronic copies of this plan sheet.

T.Y. LIN / MOFFATT & NICHOL
Two Harrison Street, Suite 500
San Francisco, CA 94105

ALL DIMENSIONS ARE IN MILLIMETERS UNLESS OTHERWISE SHOWN

ORIGINAL SCALE IN MILLIMETERS FOR REDUCED PLANS: 0 10 20 30 40 50 60 70 80 90 100

	BY	CHECKED	BY
DESIGN	R. Nutt, S. Singh	CHECKED	S. Cheng, H. Najm
DETAILS	A. Sugnausen	CHECKED	A. Lee
QUANTITIES	H. Nelson	CHECKED	A. Lee

PREPARED FOR THE STATE OF CALIFORNIA
DEPARTMENT OF TRANSPORTATION

M. Soh	PROJECT ENGINEER
S. Abbas	PROJECT MANAGER
CU	
EA 0120R4	

BRIDGE NO. 34-0006 (TEMP.)
12.6

DISREGARD PRINTS BEARING EARLIER REVISION DATES →

REVISION DATES (WHEN NOTHING STAMPED HERE)						
11/08/07	3/6/08					

SAN FRANCISCO OAKLAND BAY BRIDGE
EAST SPAN SEISMIC SAFETY PROJECT

EAST TIE-IN

SKID BENT DETAILS NO. 7

SHEET 142 214

T. Ostrom/M. Whiteside/A. Akinsanya
DESIGN OVERSIGHT

SIGN OFF DATE

DESIGN DETAIL SHEET WITH ONLY, 3/4/98
DGN FILE: [illegible] DATE: [illegible] TIME: [illegible] Pen Table File

(FILE = p:\bb0004-0120r4\eng\civil\bb0007.dgn)

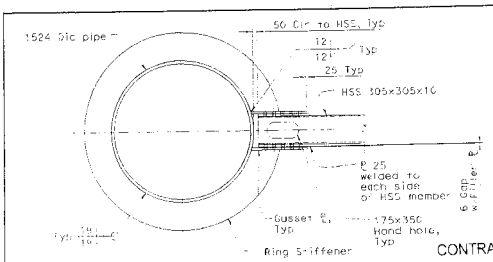

SECTION d-d
1:20

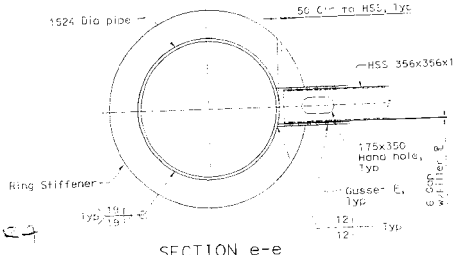

SECTION e-e
1:20

CONTRACT NO. 04-012004

CONTRACT CHANGE ORDER NO. 116

SHEET 29 OF 39

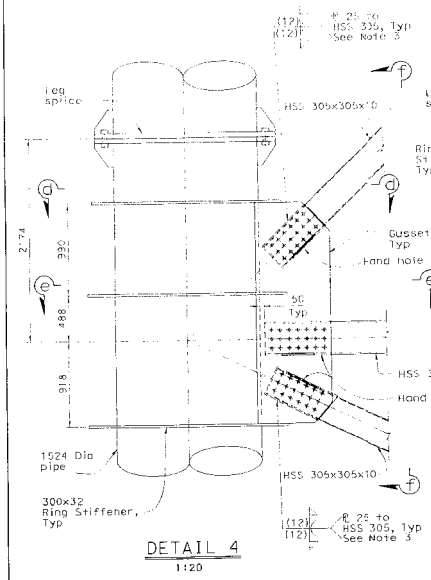

DETAIL 4
1:20

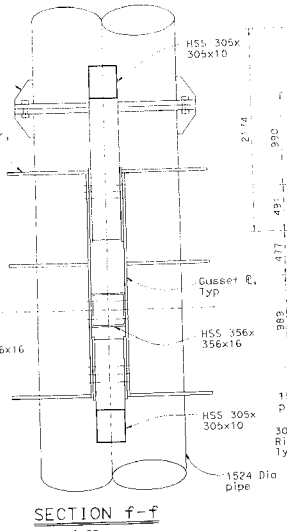

SECTION f-f
1:20

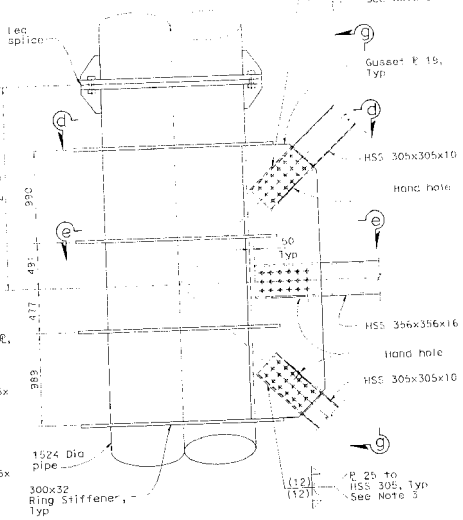

DETAIL 5
1:20

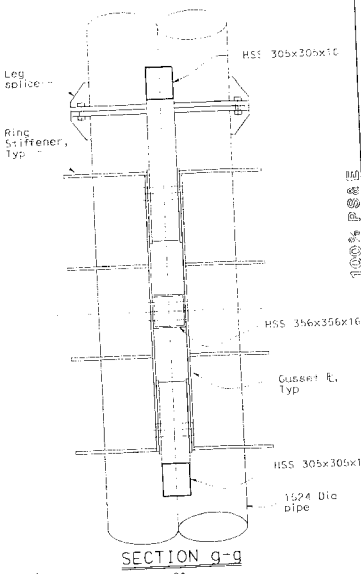

SECTION g-g
1:20

Notes:

1. The Contractor shall verify all controlling field dimensions before ordering or fabricating any material.
2. All bolts shall be 32 Dia A325, unless noted otherwise. For hole size, minimum spacing, edge distance and end distance, see "General Notes No. 2" sheet.
3. All welded spacer plates on HSS 305 members to be 356mm wide and extend from end of member to 25mm beyond gusset.

ALL DIMENSIONS ARE IN MILLIMETERS UNLESS OTHERWISE SHOWN

Caltrans Metric

REGISTERED CIVIL ENGINEER — 3-15-06 PLANS APPROVAL DATE

Y.Y. LIN / MOFFATT & NICHOL
Two Harrison Street, Suite 500
San Francisco, CA 94105

T. Ostrom/M. Whiteside/A. Akinsanya
DESIGN OVERSIGHT

SIGN OFF DATE

DESIGN DETAIL SHEET METRIC-REV. 3/1/98
♦DATE♦ ♦TIME♦ Pen Table File

	BY	CHECKED
DESIGN	R. Nutt, S. Singh	S. Cheng, K. Najm
DETAILS	A. Sudhausen	A. Lee
QUANTITIES	H. Nelson	A. Lee

ORIGINAL SCALE IN MILLIMETERS FOR MODEL PLANS

PREPARED FOR THE STATE OF CALIFORNIA DEPARTMENT OF TRANSPORTATION

M. Soh — PROJECT ENGINEER
S. Abbas — PROJECT MANAGER
CU
EA 012084
File: =3\pw\bb\04-012004\ot1\dgn\01sbd08.dgn

BRIDGE NO. 34-0006 (TEMP)
KILOMETER POST 12.6

DISREGARD PRINTS BEARING EARLIER REVISION DATES

SAN FRANCISCO OAKLAND BAY BRIDGE
EAST SPAN SEISMIC SAFETY PROJECT

EAST TIE-IN

SKID BENT DETAILS NO. 8

REVISION DATES (PRELIMINARY STAGE ONLY)								SHEETS	NO.
								143	214

USERNAME = JLIN
DATE PLOTTED = 3-15-2006

CONTRACT NO.

CONTRACT CHANGE ORDER NO.

SHEET ___ OF ___

Caltrans Metric

DIST.	COUNTY	ROUTE	POST MILE / KILOMETER POST	SHEET NO.	TOTAL SHEETS
04	SF	80	12.6/13.2		214

REGISTERED CIVIL ENGINEER — Richard V. Nutt, No. C 20608, Exp. 9/30/09, CIVIL, State of California

3-15-08
PLANS APPROVAL DATE

The State of California or its officers or agents shall not be responsible for the accuracy or completeness of electronic copies of this plan sheet.

T.Y. LIN / MOFFATT & NICHOL
Two Harrison Street, Suite 500
San Francisco, CA 94105

Notes:

1. The Contractor shall verify all controlling field dimensions before ordering or fabricating any material.
2. All bolts shall be 32 Dia A325, unless noted otherwise. For hole size, minimum spacing, edge distance and end distance, see "General Notes No. 2" sheet.
3. For anchor details, see "Skid Bent Footing Details No. 2" sheet.
4. Built-up Box Beam plate elements to be joined by continuous CJP welds with steel backing.
5. All welded spacer plates or HSS 305 members to be 356mm wide and extend from end of member to 25mm beyond gusset.

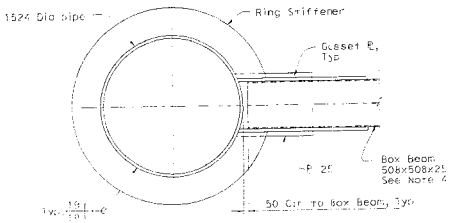

SECTION h-h
1:20

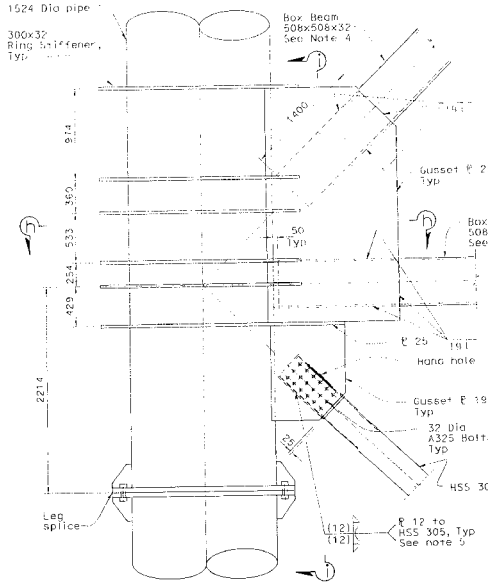

DETAIL 6
1:20

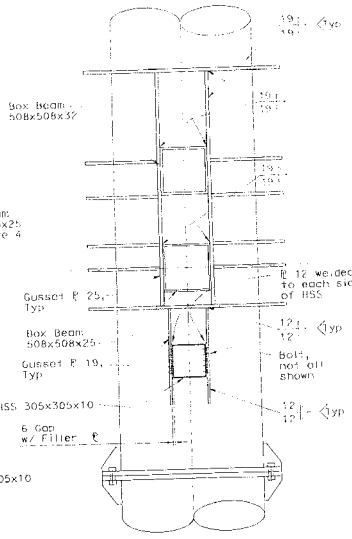

SECTION i-i
1:20

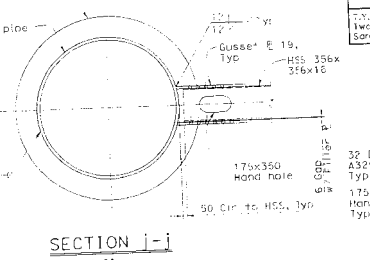

SECTION j-j
1:20

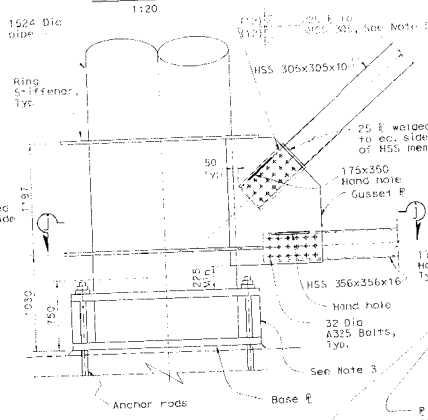

DETAIL 9
1:20

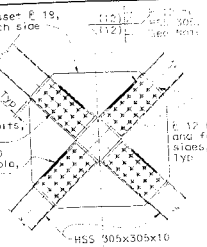

DETAIL 8
1:20

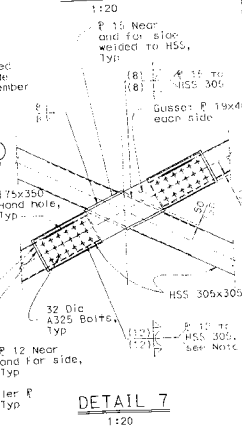

DETAIL 7
1:20

ALL DIMENSIONS ARE IN MILLIMETERS UNLESS OTHERWISE SHOWN

ORIGINAL SCALE IN MILLIMETERS FOR REDUCED PLANS 0 10 20 30 40 50 60 70 80 90 100

SAN FRANCISCO OAKLAND BAY BRIDGE
EAST SPAN SEISMIC SAFETY PROJECT

EAST TIE-IN

SKID BENT DETAILS NO. 9

BRIDGE NO.	
34-0006	
[TEMP]	
KILOMETER POST	
12.6	

DISREGARD PRINTS BEARING EARLIER REVISION DATES: —

REVISION DATES (PRELIMINARY STAGE ONLY)

NUMBER	INITIAL					

SHEET NO. 144 OF 214

	BY	CHECKED
DESIGN	R. Nutt, S. Singh	S. Cheng, H. Naja
DETAILS	A. Sudhausen	A. Lee
QUANTITIES	H. Nelson	A. Lee

PREPARED FOR THE STATE OF CALIFORNIA DEPARTMENT OF TRANSPORTATION

M. Soh	PROJECT ENGINEER
S. Abdos	PROJECT MANAGER
CU	
EA 012084	

I:\FILE => p:\bbx\04-012001\set1\sgn\st16a05.dgn

T. Ostrom/M. Whiteside/A. Akinsanya
DESIGN OVERSIGHT

SIGN OFF DATE

DESIGN DETAIL SHEET (METRIC) REV. 3/1/98
◆DATE◆ ◆TIME◆ Pen Table File

100% PS&E

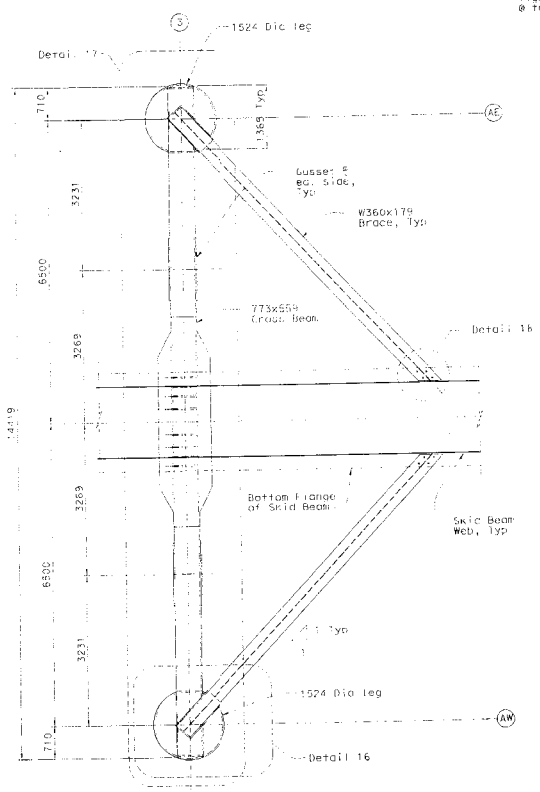

DETAIL 16
1:10

TOP FRAMING PLAN (Two Legged Tower)
1:40

Skid Bent A Two Legged Tower at Grid (3) shown.
All other Two Legged Towers similar.

SECTION k-k
1:10

ALL DIMENSIONS ARE IN MILLIMETERS UNLESS OTHERWISE SHOWN

DETAIL 18
1:10

Notes:

1. The Contractor shall verify all controlling field dimensions before ordering or fabricating any material.
2. All bolts shall be 32 Dia A325, unless noted otherwise. For hole size, minimum spacing, edge distance and end distance, see "General Notes No. 2" sheet.
3. For Detail 17, see "Skid Bent Details No. 11" sheet.

Caltrans Metric

DIST	COUNTY	ROUTE	POST MILE	SHEET NO.	TOTAL SHEETS
04	SF	80	13.2/13.7		214

REGISTERED CIVIL ENGINEER — Blazej A. Nuta, No. C 20665, Exp. 6/30/08, CIVIL, State of California

3-15-08
PLANS APPROVAL DATE

The state of California or its officers or agents shall not be responsible for the accuracy or completeness of electronic copies of this plan sheet.

T.Y. LIN / MOFFATT & NICHOL
Two Harrison Street, Suite 500
San Francisco, CA 94105

CONTRACT NO. 04-0120R4

CONTRACT CHANGE ORDER NO. 11

SHEET 51 OF 214

T. Ostrom/M. Whiteside/A. Aktinsonyo
DESIGN OVERSIGHT

SIGN OFF DATE

DESIGN DETAIL SHEET (METRIC) REV. 3/6/08
#DATE# #TIME# Pen Table File

	BY	CHECKED
DESIGN	R. Nutt, S. Singh	S. Cheng, H. Nojir
DETAILS	A. Sudhausen	A. Lee
QUANTITIES	K. Nelson	A. Lee

PREPARED FOR THE STATE OF CALIFORNIA DEPARTMENT OF TRANSPORTATION

M. Soh	PROJECT ENGINEER
S. Abdos	PROJECT MANAGER
CU	
EA 0120R4	

BRIDGE NO. 34-0006 (ITEM 7)
KILOMETER POST 12.6

DISREGARD PRINTS BEARING EARLIER REVISION DATES

ORIGINAL SCALE IN MILLIMETERS FOR REDUCED PLANS 0 10 20 30 40 50 60 70 80 90 100

FILE => p:\0R0R04\0120R4\ett\dgn\d16d18.dgn

SAN FRANCISCO OAKLAND BAY BRIDGE
EAST SPAN SEISMIC SAFETY PROJECT

EAST TIE-IN

SKID BENT DETAILS NO. 10

REVISION DATES (PRELIMINARY STAGE ONLY)	SHEET NO.
	145 214

DATE PLOTTED => 3/5/2008
TIME PLOTTED => 13:43

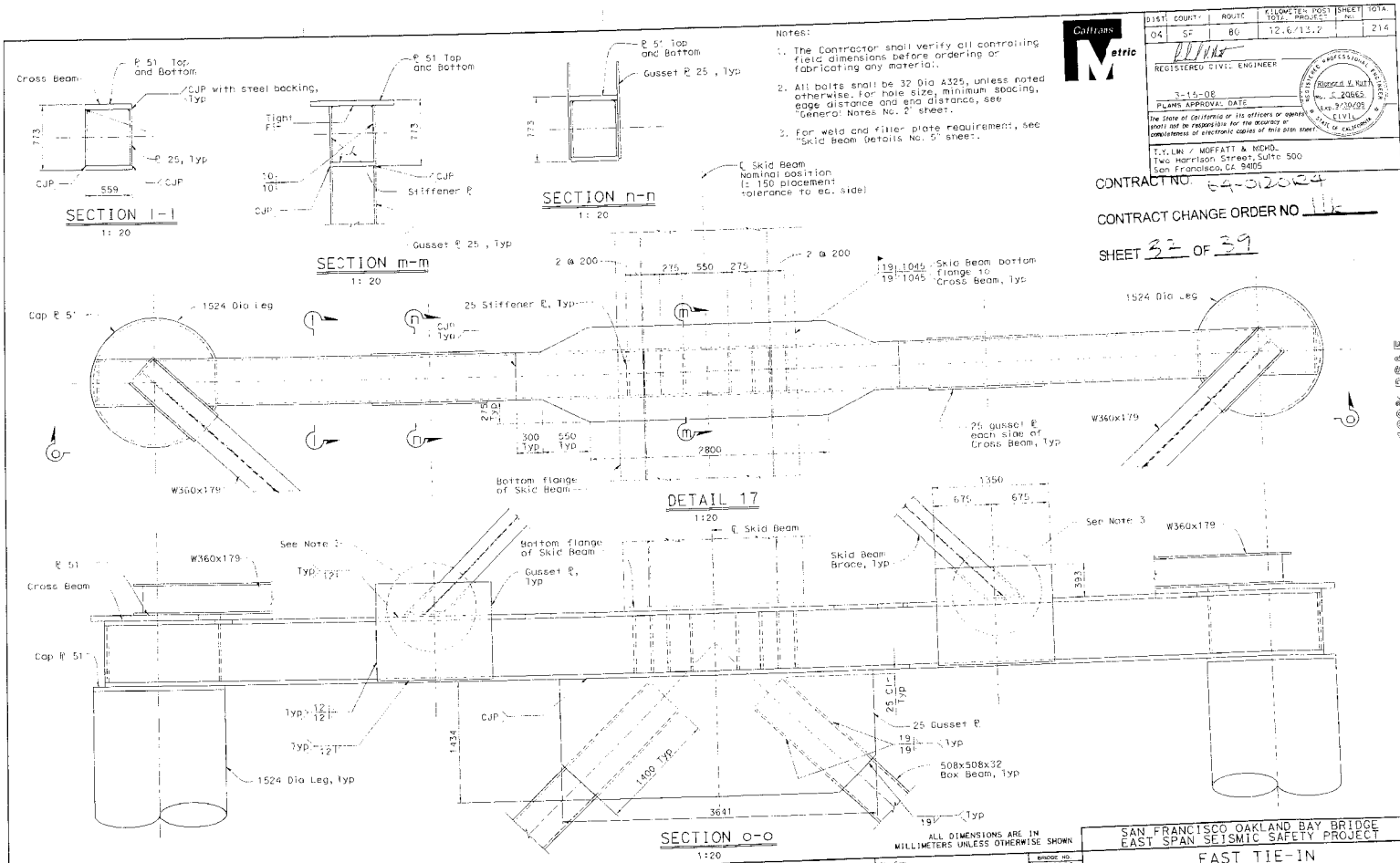

DIST.	COUNTY	ROUTE	KILOMETER POST TOTAL PROJECT	SHEET NO.	TOTAL
04	SF	80	12.6/13.2		214

REGISTERED CIVIL ENGINEER

3-15-08
PLANS APPROVAL DATE

Alonzo V. Kuth
No. C 20865
Exp. 9/30/09
CIVIL
STATE OF CALIFORNIA

The State of California or its officers or agents shall not be responsible for the accuracy or completeness of electronic copies of this plan sheet.

T.Y.LIN / MOFFATT & NICHOL
Two Harrison Street, Suite 500
San Francisco, CA 94105

CONTRACT NO. 04-0120R4

CONTRACT CHANGE ORDER NO. 11E

SHEET 32 OF 39

T. Ostrom/M. Whiteside/A. Akinsanya
DESIGN OVERSIGHT

SIGN OFF DATE

	BY	CHECKED	
DESIGN	R. Nutt, S. Singh	S. Cheng, H. Nolm	
DETAILS	A. Sudhausen	A. Lee	
QUANTITIES	H. Nelson	A. Lee	

PREPARED FOR THE STATE OF CALIFORNIA DEPARTMENT OF TRANSPORTATION

M. Son — PROJECT ENGINEER
S. Abbas — PROJECT MANAGER
CU
EA 0120R4

BRIDGE NO. 34-0006 (TEMP.)
KILOMETER POST 12.6

DISREGARD PRINTS BEARING EARLIER REVISION DATES →

ALL DIMENSIONS ARE IN MILLIMETERS UNLESS OTHERWISE SHOWN

ORIGINAL SCALE IN MILLIMETERS FOR REDUCED PLANS 0 10 20 30 40 50 60 70 80 90 100

SAN FRANCISCO OAKLAND BAY BRIDGE
EAST SPAN SEISMIC SAFETY PROJECT

EAST TIE-IN

SKID BENT DETAILS NO. 11

DIVISION OF ENGINEERING SERVICES (PRELIMINARY STAGE ONLY)

SHEETS 146 214

DESIGN DETAIL SHEET (MERGED REV. 3/1/99)
DATE# #TIME# Pen Table File

FILE => p:\bbas\04-0120r4\sht\sdgn\skdsht11.dgn

PLOTTED => 3/15/2008 1:49:45 PM

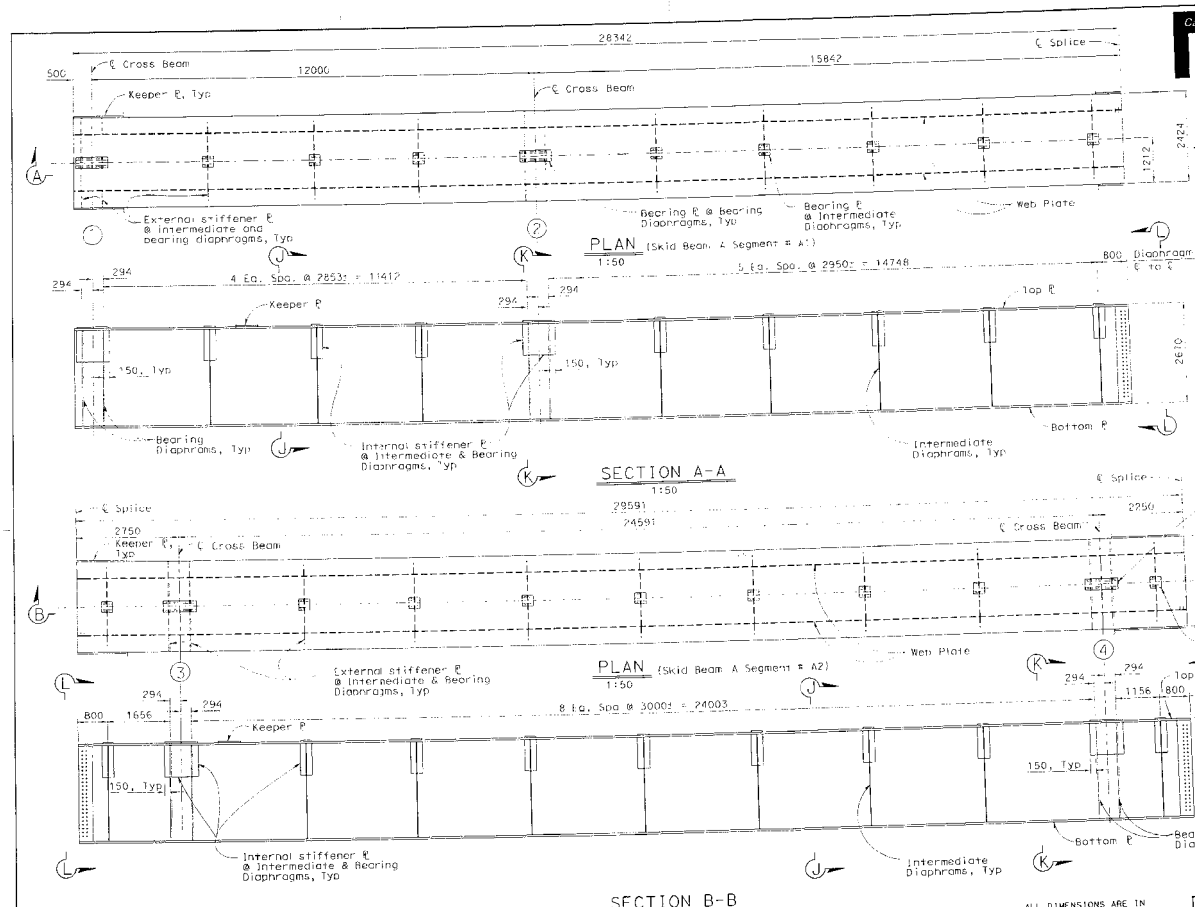

Caltrans Metric

DIST	COUNTY	ROUTE	KILOMETER POST TOTAL PROJECT	SHEET NO.
04	SF	80	12.6/13.2	

REGISTERED CIVIL ENGINEER

MAR 15 2008

PLANS APPROVAL DATE

The State of California or its officers or agents shall not be responsible for the accuracy or completeness of electronic copies of this plan sheet.

REGISTERED PROFESSIONAL ENGINEER — Richard V. JAMES — No. C 20665 — Exp. 9/30/09 — CIVIL — STATE OF CALIFORNIA

T.Y. LIN / MOFFATT & NICHOL
Two Harrison Street, Suite 500
San Francisco, CA 94105

CONTRACT NO. 04-0120R4

CONTRACT CHANGE ORDER NO 116

SHEET 233 OF 314

Notes:

1. The Contractor shall verify all controlling field dimensions before ordering or fabricating any material.
2. All bolts shall be 32 Dia A325, unless noted otherwise. For hole size, minimum spacing, edge distance and end distance, see "General Notes No. 2" sheet.
3. For Section J-J, K-K and L-L, see "Skid Beam Details No. 5" sheet.

ALL DIMENSIONS ARE IN MILLIMETERS UNLESS OTHERWISE SHOWN

SAN FRANCISCO OAKLAND BAY BRIDGE
EAST SPAN SEISMIC SAFETY PROJECT

EAST TIE-IN

SKID BEAM DETAILS NO. 1

T. Ostrom/M. Whiteside/A. Akinsanya	DESIGN	BY R. Nutt, J. Otter	CHECKED S. Cheng, H. Ndjm
DESIGN OVERSIGHT	DETAILS	BY D. Singh	CHECKED A. Lee
SIGN OFF DATE	QUANTITIES	BY H. Nelson	CHECKED A. Lee

PREPARED FOR THE STATE OF CALIFORNIA DEPARTMENT OF TRANSPORTATION

H. Soh, PROJECT ENGINEER
S. Abbas, PROJECT MANAGER

BRIDGE NO. 34-0006 (TEMP)
KILOMETER POST 12.6

CU
EA 0120R4

DESIGN DETAIL SHEET METRIC REV. 3/29/01
ROUTE# BT/MILE# Pen Table File

ORIGINAL SCALE IN MILLIMETERS FOR REDUCED PLANS 0 10 20 30 40 50 60 70 80 90 100

FILE =F:\DIN\BX04-317001\Sht\Skid Beam_S_01_08\a1sbd001.dgn

DISREGARD PRINTS BEARING EARLIER REVISION DATES

REVISION DATES (PW/ENGINEER STAMP ONLY)

DATE	DATE
11/08/07	3/11/08

SHEET 147 OF 214

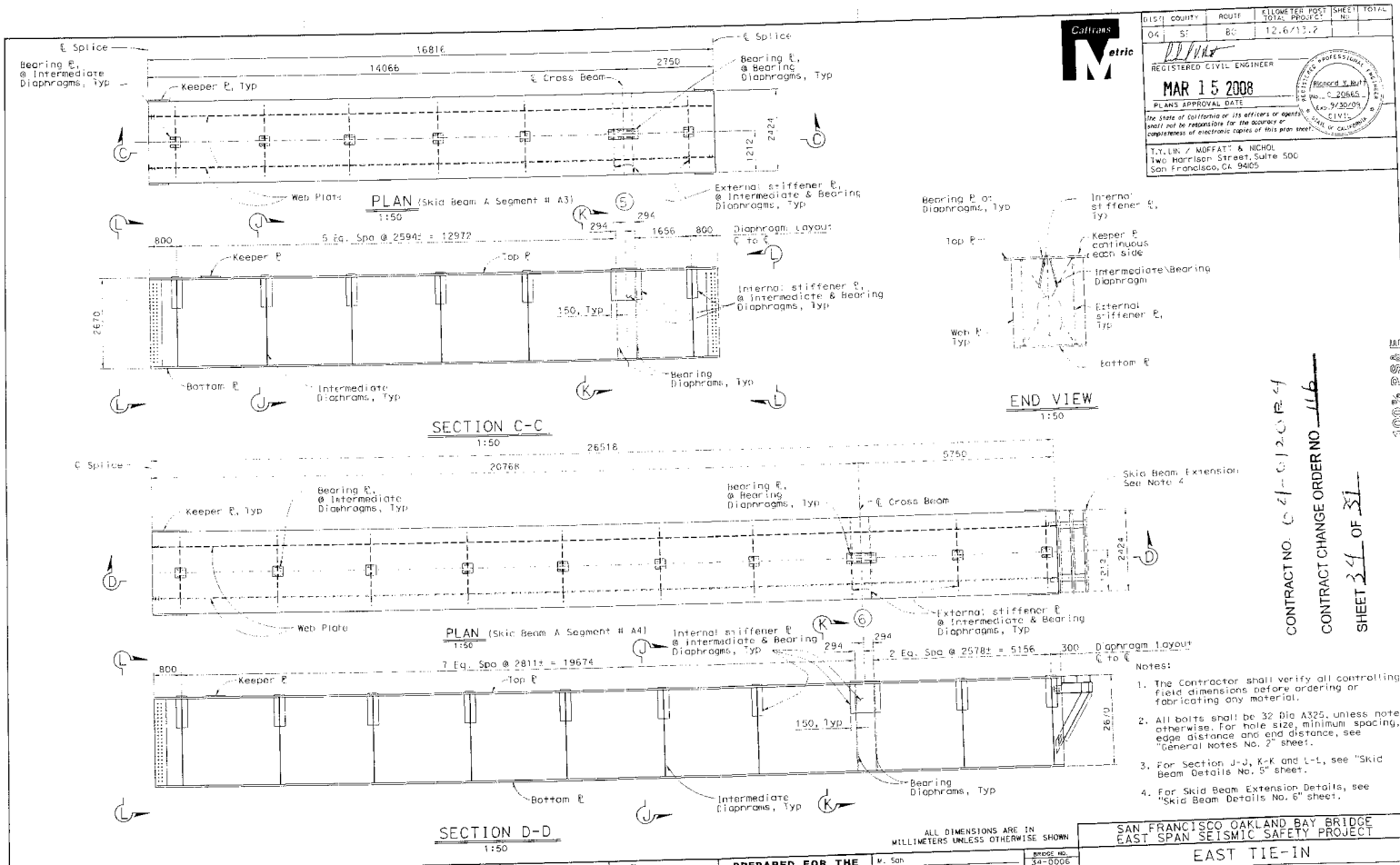

Caltrans Metric

DIST	COUNTY	ROUTE	KILOMETER POST TOTAL PROJECT	SHEET TOTAL NO.
04	SF	80	12.6/13.2	

REGISTERED CIVIL ENGINEER

MAR 15 2008

PLANS APPROVAL DATE

Richard Y. Nutt No. C 20665 Exp. 9/30/09 CIVIL STATE OF CALIFORNIA

The state of California or its officers or agents shall not be responsible for the accuracy or completeness of electronic copies of this plan sheet.

T.Y.LIN / MOFFATT & NICHOL
Two Harrison Street, Suite 500
San Francisco, CA 94105

CONTRACT NO. 04-0120C4

CONTRACT CHANGE ORDER NO. 116

SHEET 34 OF 51

100% PS&E

ALL DIMENSIONS ARE IN MILLIMETERS UNLESS OTHERWISE SHOWN

Notes:

1. The Contractor shall verify all controlling field dimensions before ordering or fabricating any material.
2. All bolts shall be 32 Dia A325, unless noted otherwise, for hole size, minimum spacing, edge distance and end distance, see "General Notes No. 2" sheet.
3. For Section J-J, K-K and L-L, see "Skid Beam Details No. 5" sheet.
4. For Skid Beam Extension Details, see "Skid Beam Details No. 6" sheet.

T. Ostrom/M. Whiteside/A. Akinsanya
DESIGN OVERSIGHT

SIGN OFF DATE

DESIGN DETAIL SHEET (METRIC) REV. 3/4/08
4DATE# 4TIME# Pen Table File

	BY	CHECKED
DESIGN	R. Nutt, J. Otter	S. Cheng, H. Nojm
DETAILS	D. Singh	A. Lee
QUANTITIES	N. Nelson	A. Lee

ORIGINAL SCALE IN MILLIMETERS FOR REDUCED PLANS 0 10 20 30 40 50 60 70 80 90 100

PREPARED FOR THE STATE OF CALIFORNIA DEPARTMENT OF TRANSPORTATION

M. Sah
PROJECT ENGINEER
S. Abbas
PROJECT MANAGER
CU
EA 0120R4

FILE => D:\bb\04-012001\ert\SKID_PAGE_5_DT_080101BEK002.dgn

BRIDGE NO. 34-0006 (TEMP.)
KILOMETER POST 12.6

DISREGARD PRINTS BEARING EARLIER REVISION DATES

SAN FRANCISCO OAKLAND BAY BRIDGE
EAST SPAN SEISMIC SAFETY PROJECT

EAST TIE-IN

SKID BEAM DETAILS NO. 2

REVISION DAILY TIME ESTIMATE STAGE DIST.							SHEET NO.	OF
SIGNED	SIGNED						148	214

USERNAME => AKEE

DATE PLOTTED => 3-7-2008

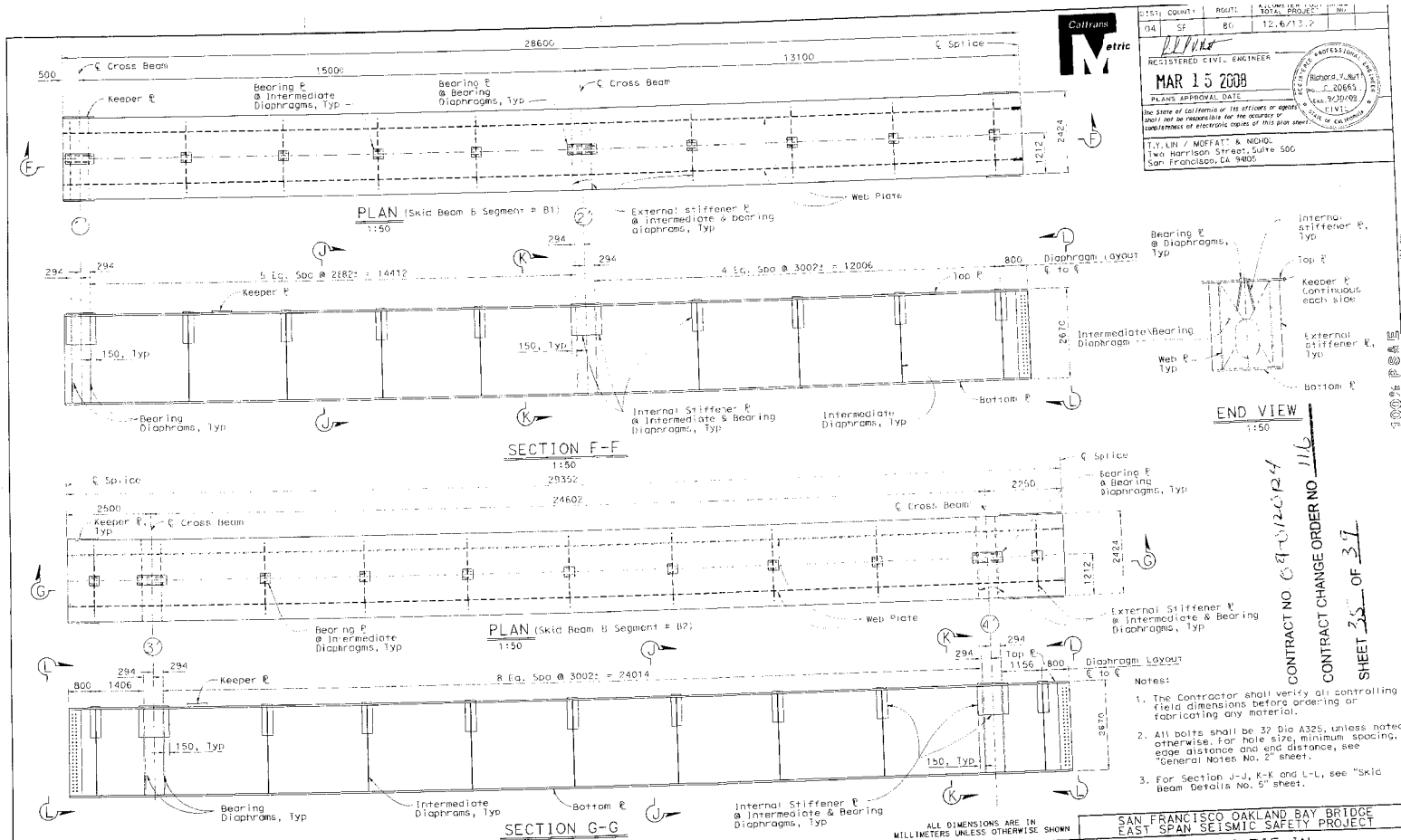

Caltrans Metric

DIST	COUNTY	ROUTE	ACCUMULATED TOTAL PROJECT	NO.
04	SF	80	12.6/13.2	

REGISTERED CIVIL ENGINEER

MAR 15 2008

PLANS APPROVAL DATE

Richard V. Nutt, No. C 20665, Exp. 9/30/09, CIVIL, State of California

The State of California or its officers or agents shall not be responsible for the accuracy or completeness of electronic copies of this plan sheet.

T.Y. LIN / MOFFATT & NICHOL
Two Harrison Street, Suite 500
San Francisco, CA 94105

CONTRACT NO 04-0120K4
CONTRACT CHANGE ORDER NO 116
SHEET 35 OF 37

Notes:

1. The Contractor shall verify all controlling field dimensions before ordering or fabricating any material.
2. All bolts shall be 32 Dia A325, unless noted otherwise, for hole size, minimum spacing, edge distance and end distance, see "General Notes No. 2" sheet.
3. For Section J-J, K-K and L-L, see "Skid Beam Details No. 5" sheet.

ALL DIMENSIONS ARE IN MILLIMETERS UNLESS OTHERWISE SHOWN

SAN FRANCISCO OAKLAND BAY BRIDGE
EAST SPAN SEISMIC SAFETY PROJECT

EAST TIE-IN

SKID BEAM DETAILS NO. 3

T. Ostrom/M. Whiteside/A. Akinsanya	DESIGN	BY R. Nutt, J. Otter	CHECKED S. Cheng, H. Najm
DESIGN OVERSIGHT	DETAILS	BY D. Singh	CHECKED A. Lee
SIGN OFF DATE	QUANTITIES	BY M. Nelson	CHECKED A. Lee

PREPARED FOR THE STATE OF CALIFORNIA
DEPARTMENT OF TRANSPORTATION

N. Soh, PROJECT ENGINEER
S. Abbas, PROJECT MANAGER

BRIDGE NO. 34-0006 (TEMP.)
KILOMETER POST 12.6

CU EA 0120K4

DISREGARD PRINTS BEARING EARLIER REVISION DATES

REVISION DATES (PRELIMINARY STAGE ONLY)						
USERS	USERS					

SHEETS 149 214

ORIGINAL SCALE IN MILLIMETERS FOR REDUCED PLANS 0 10 20 30 40 50 60 70 80 90 100

DESIGN DETAIL SHEET (METRIC) REV. 7/17/08
MDATE# MTIME# Pen Table File

FILE => p:\bb\04-0120k4\et\skbdtl\skbdtl_5_9-08\skbdtl03.dgn

USERNAME = ALAN
DATE PLOTTED = 3-14-08

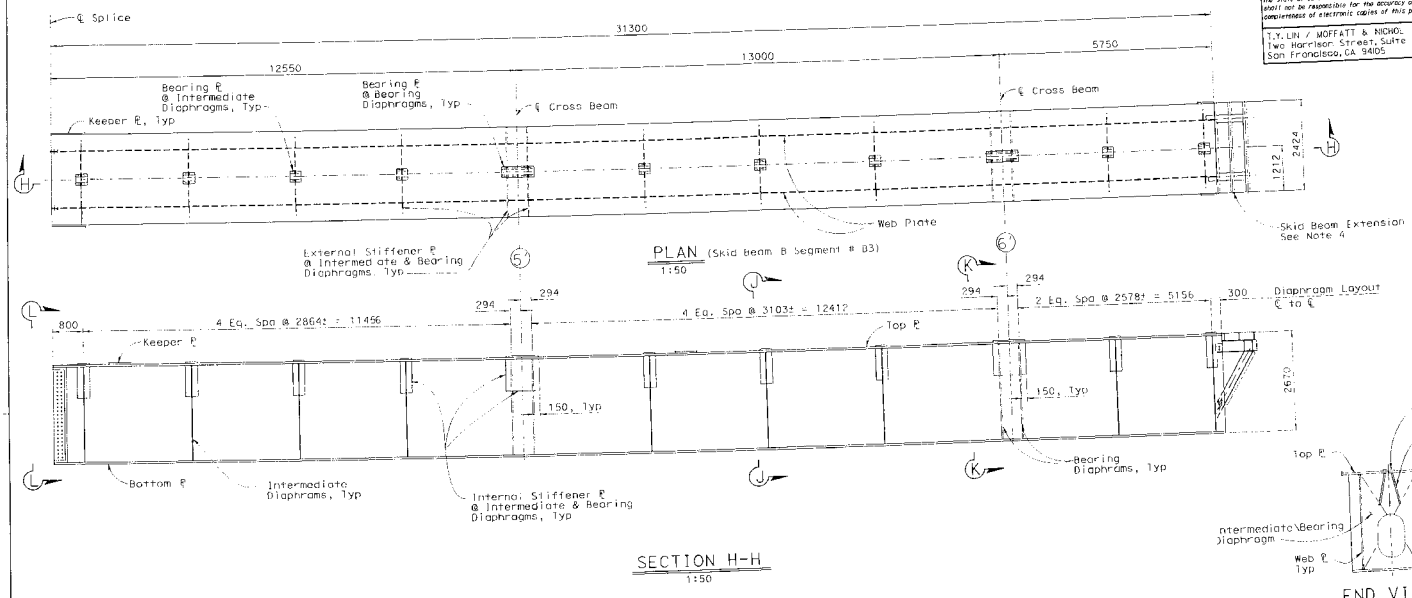

DIST	COUNTY	ROUTE	KILOMETER POST TOTAL PROJECT	NO.
04	SF	80	12.6/13.2	

REGISTERED CIVIL ENGINEER

MAR 15 2008

PLANS APPROVAL DATE

Bernard V. Nutt, No. C 20665, Exp. 9/30/09, CIVIL, State of California

The State of California or its officers or agents shall not be responsible for the accuracy or completeness of electronic copies of this plan sheet.

T.Y.LIN / MOFFATT & NICHOL
Two Harrison Street, Suite 500
San Francisco, CA 94105

Notes:

1. The Contractor shall verify all controlling field dimensions before ordering or fabricating any material.
2. All bolts shall be 32 Dia A325, unless noted otherwise. For hole size, minimum spacing, edge distance and end distance, see "General Notes No. 2" sheet.
3. For Section J-J, K-K and L-L, see "Skid Beam Details No. 5" sheet.
4. For Skid Beam Extension Details, see "Skid Beam Details No. 6" sheet.

CONTRACT NO. 04-0120F4

CONTRACT CHANGE ORDER NO. 116

SHEET 36 OF 39

ALL DIMENSIONS ARE IN MILLIMETERS UNLESS OTHERWISE SHOWN

SAN FRANCISCO OAKLAND BAY BRIDGE
EAST SPAN SEISMIC SAFETY PROJECT

EAST TIE-IN

SKID BEAM DETAILS NO. 4

I. Ostrom/M. Whiteside/A. Akinsanya	DESIGN	BY R. Nutt, J. Otter	CHECKED S. Cheng, H. Najm
DESIGN OVERSIGHT	DETAILS	BY D. Singh	CHECKED K. Lee
SIGN OFF DATE	QUANTITIES	BY H. Nelson	CHECKED A. Lee

PREPARED FOR THE STATE OF CALIFORNIA DEPARTMENT OF TRANSPORTATION

N. Soh — PROJECT ENGINEER
S. Abbas — PROJECT MANAGER

BRIDGE NO. 34-0006 (TEMP.)
KILOMETER POST 12.6

CU 0120R4
EA 0120R4

DISREGARD PRINTS BEARING EARLIER REVISION DATES

REVISION DATES (PRELIMINARY STAGE ONLY)

SHEETS 150 214

DESIGN DETAIL SHEET METRIC (REV. 3/1/00)
#DATE# #TIME# Pen Table File

ORIGINAL SCALE IN MILLIMETERS FOR REDUCED PLANS 0 10 20 30 40 50 60 70 80 90 100

FILE => p:\bb\04-0120r4\ref\skid beam_b_01_08\plotsdb04.dgn

DATE PLOTTED => 3/7/2008

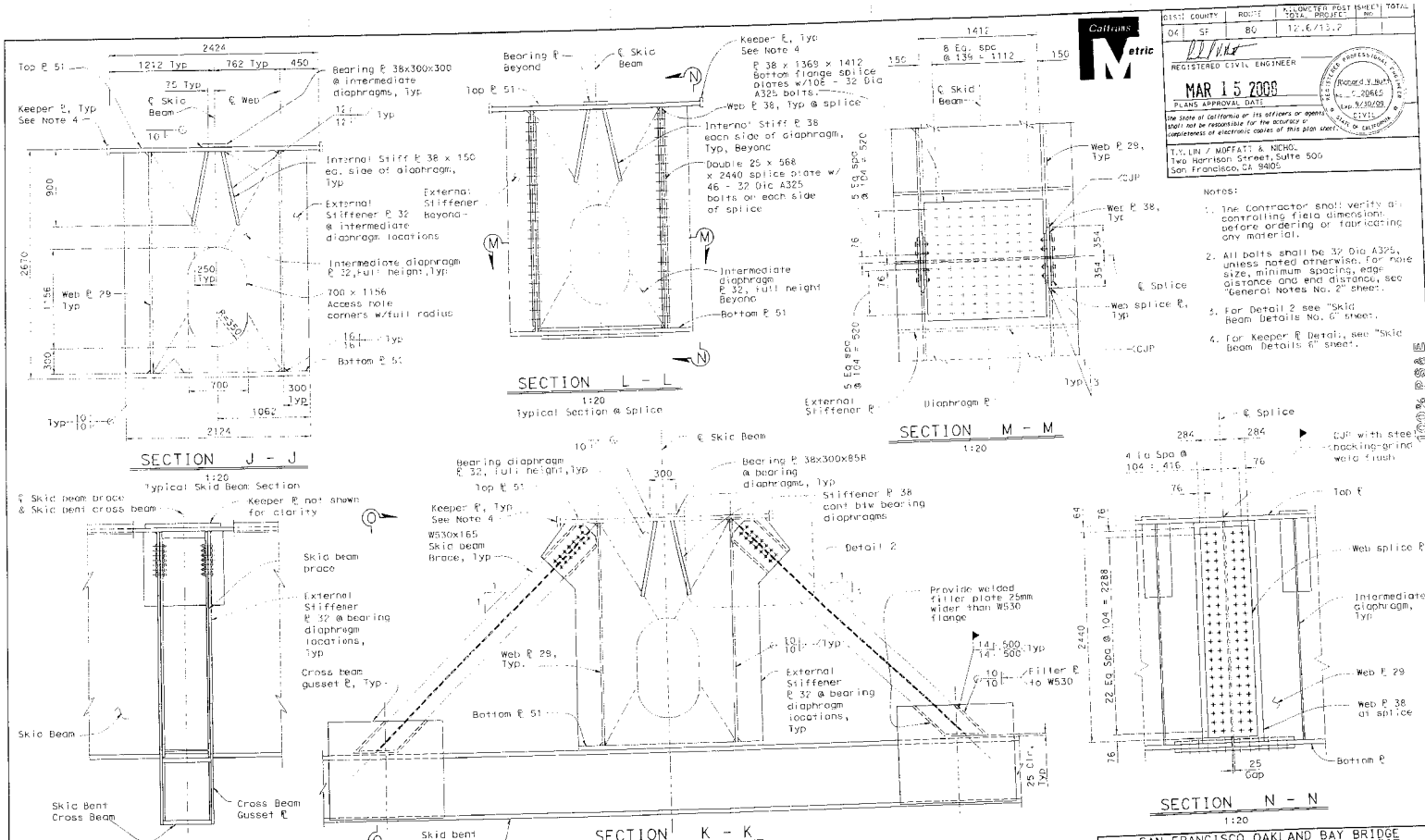

DIST	COUNTY	ROUTE	POST MILE/KILOMETER	SHEET NO.	TOTAL SHEETS
04	SF	80	12.6/13.2		

REGISTERED CIVIL ENGINEER

MAR 15 2009

PLANS APPROVAL DATE

Prepared by Moffatt & Nichol

The State of California or its officers or agents shall not be responsible for the accuracy or completeness of electronic copies of this plan sheet.

T.Y. LIN / MOFFATT & NICHOL
Two Harrison Street, Suite 505
San Francisco, CA 94105

T. Ostrom/M. Whiteside/A. Akinsanya
DESIGN OVERSIGHT

SIGN OFF DATE

CONTRACT CHANGE ORDER NO. 116

SHEET 37 OF 45

	BY	CHECKED
DESIGN	R. Nutt, J. Otter	S. Chang, H. Najm
DETAILS	D. Singh	A. Lee
QUANTITIES	H. Nelson	A. Lee

PREPARED FOR THE STATE OF CALIFORNIA DEPARTMENT OF TRANSPORTATION

M. Soh — PROJECT ENGINEER
S. Adkins — PROJECT MANAGER
CU
EA 012084

ALL DIMENSIONS ARE IN MILLIMETERS UNLESS OTHERWISE SHOWN

BRIDGE NO. 34-0006 (TEMP.)
KM/CMETER POST 12.6

DISREGARD PRINTS BEARING EARLIER REVISION DATES

SAN FRANCISCO OAKLAND BAY BRIDGE
EAST SPAN SEISMIC SAFETY PROJECT

EAST TIE-IN

SKID BEAM DETAILS NO. 5

SHEET 151 OF 214

CONTRACT NO. 64-0120R4

DESIGN DETAIL SHEET (METRIC) REV. 3/6/98
DATE= WTIME= Pen Table File

ORIGINAL SCALE IN MILLIMETERS FOR REDUCED PLANS 0 10 20 30 40 50 60 70 80 90 100

FILL = p:\06b304-012001\ctt\skid beam_5_01_08\d1skbm05.dgn

REVISION DATES (PRELIMINARY STAGE ONLY)

USER NAME = tyjoo DESIGN = 3/6/2008

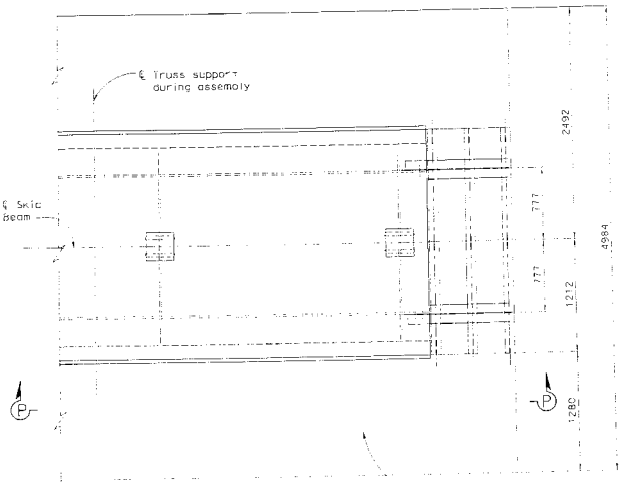

SKID BEAM EXTENSION PLAN
1:20

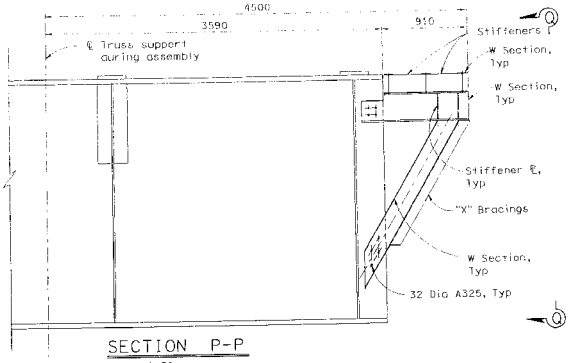

SECTION P-P
1:20

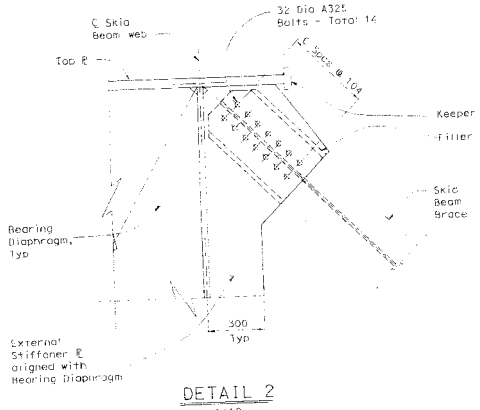

DETAIL 2
1:10

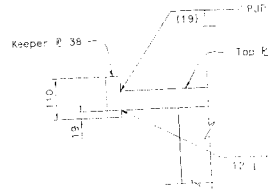

KEEPER ℙ DETAIL
1:5

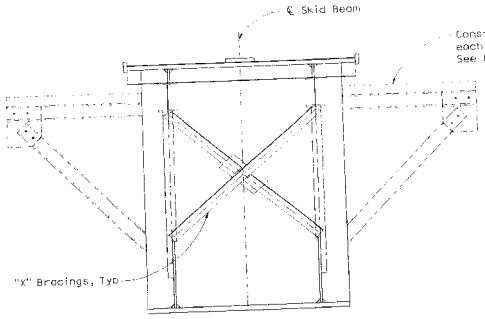

SECTION Q-Q
1:20

Caltrans Metric

DIST	COUNTY	ROUTE	TOTAL PROJECT NO.
04	SF	80	12.6/12.2

REGISTERED CIVIL ENGINEER
MAR 15 2008
PLANS APPROVAL DATE
The State of California or its officers or agents shall not be responsible for the accuracy or completeness of electronic copies of this plan sheet.
Richard Y. Nutt No. C 20685 Exp. 9/30/09 CIVIL STATE OF CALIFORNIA

Y.Y. LIN / MOFFATT & NICHOL
Two Harrison Street, Suite 500
San Francisco, CA 94105

CONTRACT NO. 04-0120R4
CONTRACT CHANGE ORDER NO. 116
SHEET 35 OF 37

Notes:
1. The Contractor shall verify all controlling field dimensions before ordering or fabricating any material.
2. All bolts shall be 32 Dia A325, unless noted otherwise. For hole size, minimum spacing, edge distance and end distance, see "General Notes No. 2" sheet.
3. For Construction Walkway Details, see "Skid Beam Details No. 7" sheet.

T. Ostrom/M. Whiteside/A. Akinsanya	DESIGN	R. Nutt, J. Otter	S. Cheng, H. Najm
DESIGN OVERSIGHT	DETAILS	G. Singh	A. Lee
SIGN OFF DATE	QUANTITIES	H. Nelson	A. Lee

DESIGN DETAIL SHEET METRIC-REV. 3/1/98
DGN File: KTIME# Pen Table File

PREPARED FOR THE STATE OF CALIFORNIA DEPARTMENT OF TRANSPORTATION

ORIGINAL SCALE IN MILLIMETERS FOR REDUCED PLANS 0 10 20 30 40 50 60 70 80 90 100

ALL DIMENSIONS ARE IN MILLIMETERS UNLESS OTHERWISE SHOWN

M. Sah — PROJECT ENGINEER
S. Abbas — PROJECT MANAGER
12.E — DISREGARD PRINTS BEARING EARLIER REVISION DATES

BRIDGE NO. 34-0006 (TEMP)
KILOMETER POST

CU
E.A. 0120R4

FILE =X:\ST\SBO\04-0120R4\eff\skid bmdr_R_01_08\skmd06.dgn

SAN FRANCISCO OAKLAND BAY BRIDGE
EAST SPAN SEISMIC SAFETY PROJECT
EAST TIE-IN
SKID BEAM DETAILS NO. 6

REVISION DATES (PRELIMINARY STAGE ONLY)	INITIAL	ISSUE

SHEET 152 OF 214

USERNAME = JLAKE

PLOTTED = 3/7/2008

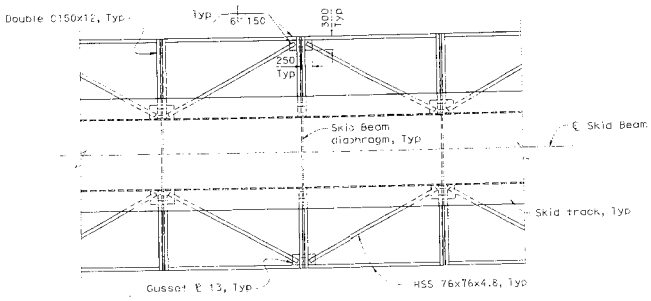

CONSTRUCTION WALKWAY FRAMING PLAN

1:40

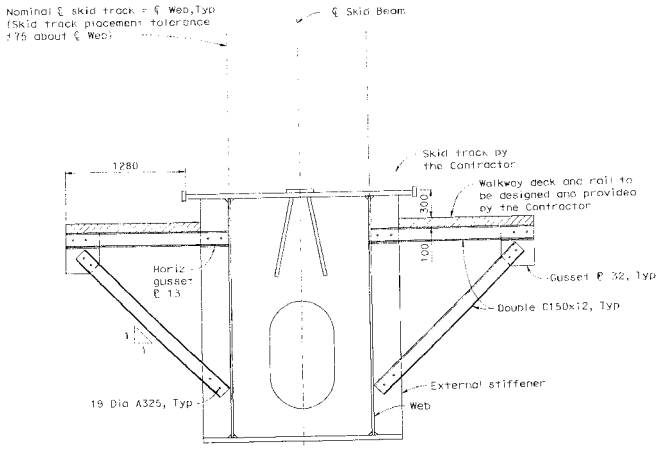

CONSTRUCTION WALKWAY FRAMING SECTION

1:20

Caltrans Metric

DIST.	COUNTY	ROUTE	TOTAL PROJECT
04	SF	80	12.6/13.2

REGISTERED CIVIL ENGINEER

MAR 15 2008

PLANS APPROVAL DATE

The State of California or its officers or agents shall not be responsible for the accuracy or completeness of electronic copies of this plan sheet.

REGISTERED PROFESSIONAL ENGINEER Richard V. Nutt No. C 20664 Exp. 9/30/09 CIVIL STATE OF CALIFORNIA

T.Y. LIN / MOFFATT & NICHOL
Two Harrison Street, Suite 500
San Francisco, CA 94105

100% PS&E

CONTRACT NO. 04-012024

CONTRACT CHANGE ORDER NO 116

SHEET 39 OF 39

Notes:

1. The Contractor shall verify all controlling field dimensions before ordering or fabricating any material.
2. All bolts shall be 32 Dia A325, unless noted otherwise. For hole size, minimum spacing, edge distance and end distance, see "General Notes No. 2" sheet.

ALL DIMENSIONS ARE IN MILLIMETERS UNLESS OTHERWISE SHOWN

SAN FRANCISCO OAKLAND BAY BRIDGE
EAST SPAN SEISMIC SAFETY PROJECT

EAST TIE-IN

SKID BEAM DETAILS NO. 7

T. Ostrom/M. Whiteside/A. Akinsanya
DESIGN OVERSIGHT

SIGN OFF DATE

DESIGN DETAIL SHEET METRIC REV. 3/4/08
#DATE# #TIME# Pen Table File

DESIGN	BY R. Nutt, J. Otter	CHECKED S. Cheng, H. Najm	
DETAILS	BY D. Singh	CHECKED A. Lee	
QUANTITIES	BY H. Nelson	CHECKED A. Lee	

PREPARED FOR THE STATE OF CALIFORNIA DEPARTMENT OF TRANSPORTATION

M. Sah
PROJECT ENGINEER
S. Abbas
PROJECT MANAGER

BRIDGE NO. 34-0006 (TEMP)
KILOMETER POST 12.6

CU
EA 012084

DISREGARD PRINTS BEARING EARLIER REVISION DATES

REVISION DATES (PRELIMINARY STAGE ONLY)

SHEET 153 OF 214

ORIGINAL SCALE IN MILLIMETERS FOR REDUCED PLANS 0 10 20 30 40 50 60 70 80 90 100

FILE => p:\bb\04-012001\eli\skid beam_5_01_08\ak\bm107.dgn

DESIGNED BY: S. Abbas

CONTRACT CHANGE ORDER

Change Requested by: Engineer

CCO 116	Suppl. No. 1	Contract No. 04 - 0120R4	Road SF-80-12.6/13.2	FED. AID LOC.: ACBRIM-080-1(097)N

To: **CC MYERS INC**

You are directed to make the following changes from the plans and specifications or do the following described work not included in the plans and specifications for this contract. ***NOTE: This change order is not effective until approved by the Engineer.***

Description of work to be done, estimate of quantities and prices to be paid. (Segregate between additional work at contract price, agreed price and force account.) Unless otherwise stated, rates for rental of equipment cover only such time as equipment is actually used and no allowance will be made for idle time. This last percentage shown is the net accumulated increase or decrease from the original quantity in the Engineer's Estimate.

Extra Work at Force Account:

Provide additional funds for the freight costs associated with the transportation of the finished fabricated skid beam from the fabrication facility to the Contractor's laydown yard.

Estimated Cost of Extra Work at Force Account $1,300,000.00

Adjustment of Compensation at Lump Sum:

Provide for modifications to the fabrication of the skid bent and skid beam of the East Tie-In (ETI) portion of the Temporary Bypass Structure (Bridge No. 34-0006 (TEMP)) as shown on Pages No. 3 through 17 of this change order.

For this work, the Contractor shall be compensated a lump sum of $596,750.00. Except for the items of work specifically excluded below, this sum constitutes full and final compensation, including all markups, for all costs associated with the work of this change.

The costs of procuring all raw steel and fasteners for the modifications to the skid bent and beam are excluded from this change and shall be compensated under Change Order No. 112. The cost of all consumable materials is included in the lump sum price paid under this change order.

Any additional cost associated with the erection of the skid bent and beam is excluded from this change order.

The cost of transporting the fabricated steel of the skid bent and beam to the project site is excluded from the lump sum price and shall be paid as extra work at force account as specified under the original Change Order No. 116.

Consideration of a time adjustment will be deferred until completion of the work specified herein. Determination of a commensurate time extension will be made in accordance with Section 8-1.07, "Liquidated Damages", of the Standard Specifications and Section 10-1.20 "Time Related Overhead (TRO)" of the Special Provisions.

Compensation for delays resulting from this work will be made in accordance with Section 8-1.09 "Right of Way Delays" of the Standard Specifications and Section 10-1.20 "Time Related Overhead" of the Special Provisions.

Total Cost of Adjustment of Compensation at Lump Sum $596,750.00

CONTRACT CHANGE ORDER

Change Requested by: Engineer

CCO 116	Suppl. No. 1	Contract No. 04 - 0120R4	Road SF-80-12.6/13.2	FED. AID LOC.: ACBRIM-080-1(097)N

Estimated Cost: Increase ☑ Decrease ☐ $1,896,750.00

By reason of this order the time of completion will be adjusted as follows: Deferred

Submitted by

Signature	Resident Engineer BILL CASEY	Date 12-11-08

Approval Recommended by

Signature Michael Forner	SFOBB Construction Manager MIKE FORNER	Date 12-18-08

Engineer Approval by

Signature Michael Forner	SFOBB Construction Manager MIKE FORNER	Date 2-3-2009

We the undersigned contractor, have given careful consideration to the change proposed and agree, if this proposal is approved, that we will provide all equipment, furnish the materials, except as may otherwise be noted above, and perform all services necessary for the work above specified, and will accept as full payment therefor the prices shown above.

NOTE: If you, the contractor, do not sign acceptance of this order, your attention is directed to the requirements of the specifications as to proceeding with the ordered work and filing a written protest within the time therein specified.

Contractor Acceptance by

Signature	(Print name and title) DANIEL E. Homick, PRESIDENT	Date 1/20/09

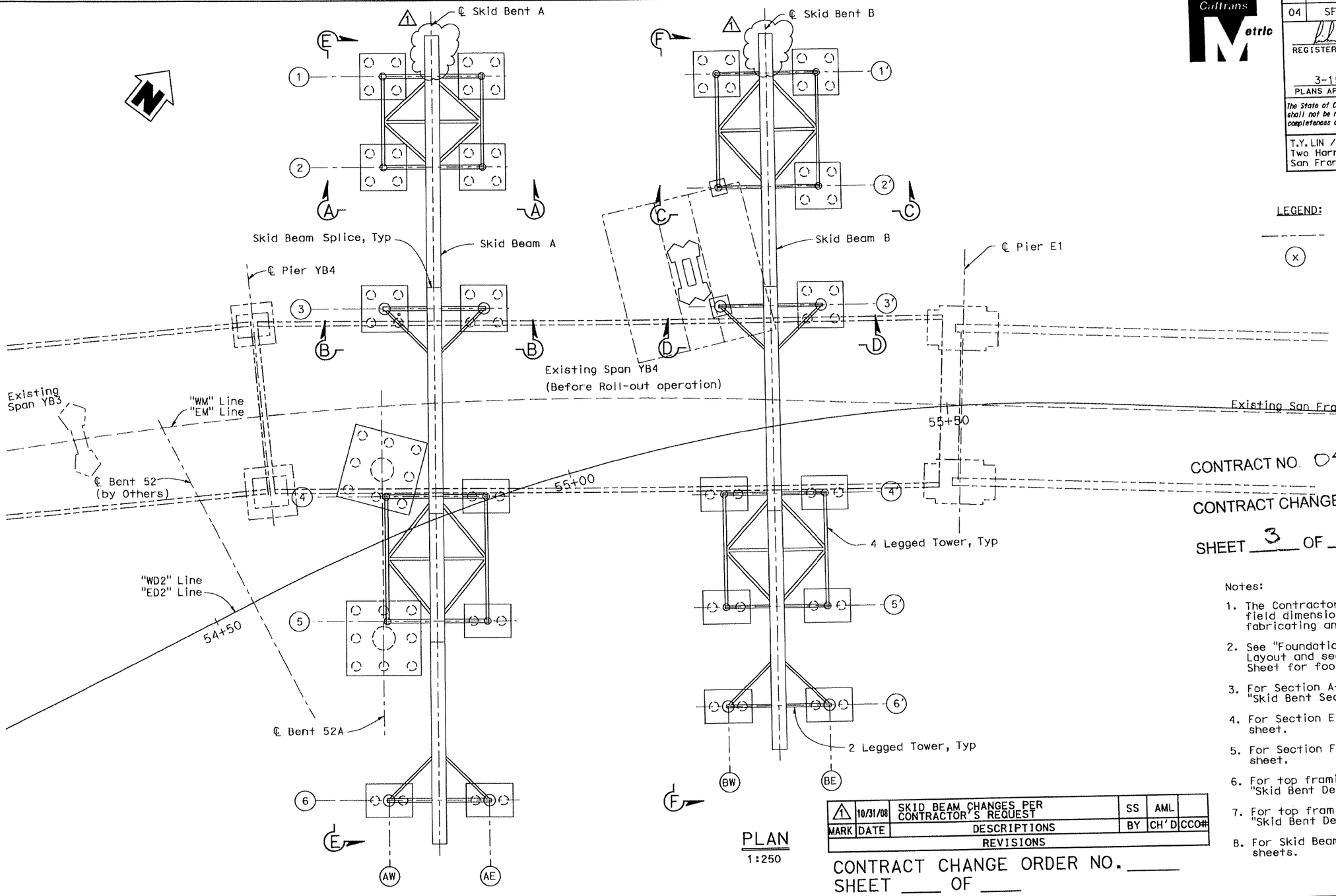

PLAN
1:250

DIST	COUNTY	ROUTE	KILOMETER POST TOTAL PROJECT	SHEET No	TOTAL
04	SF	80	12.6/13.2		

REGISTERED CIVIL ENGINEER

3-15-08
PLANS APPROVAL DATE

Richard V. Nutt
No. C 20665
Exp. 9/30/09
CIVIL
STATE OF CALIFORNIA

The State of California or its officers or agents shall not be responsible for the accuracy or completeness of electronic copies of this plan sheet.

T.Y. LIN / MOFFATT & NICHOL
Two Harrison Street, Suite 500
San Francisco, CA 94105

LEGEND:

——— Indicates Existing Structure

(x) Indicates Grid Line

CONTRACT NO. 04-0120R4

CONTRACT CHANGE ORDER NO 116-S1

SHEET 3 OF 17

Notes:

1. The Contractor shall verify all controlling field dimensions before ordering or fabricating any material.
2. See "Foundation Plan" sheet for footing Layout and see "Skid Bent Footing Details" Sheet for footing sizes.
3. For Section A-A, B-B, C-C and D-D, see "Skid Bent Sections No. 1" sheet.
4. For Section E-E, see "Skid Bent Sections No. 2" sheet.
5. For Section F-F, see "Skid Bent Sections No. 3" sheet.
6. For top framing plan of 4 Legged Towers, see "Skid Bent Details No. 4 thru 6" sheets.
7. For top framing plan of 2 Legged Towers, see "Skid Bent Details No. 10 and 11" sheets.
8. For Skid Beam details, see "Skid Beam Details" sheets.

MARK	DATE	DESCRIPTIONS	BY	CH'D	CCO#
1	10/31/08	SKID BEAM CHANGES PER CONTRACTOR'S REQUEST	SS	AML	
		REVISIONS			

CONTRACT CHANGE ORDER NO. ____
SHEET ____ OF ____

ALL DIMENSIONS ARE IN MILLIMETERS UNLESS OTHERWISE SHOWN

SAN FRANCISCO OAKLAND BAY BRIDGE
EAST SPAN SEISMIC SAFETY PROJECT

EAST TIE-IN

SKID BENT LAYOUT

T. Ostrom/M. Whiteside/A. Akinsanya	DESIGN	R. Nutt, S. Singh	S. Cheng, H. Najm
DESIGN OVERSIGHT	DETAILS	A. Sudhausen	A. Lee
SIGN OFF DATE	QUANTITIES	H. Nelson	A. Lee

PREPARED FOR THE STATE OF CALIFORNIA
DEPARTMENT OF TRANSPORTATION

M. Sah
PROJECT ENGINEER
S. Abbas
PROJECT MANAGER
CU
EA 0120R4

BRIDGE NO. 34-0006 (TEMP)
KILOMETER POST 12.6

DISREGARD PRINTS BEARING EARLIER REVISION DATES →
REVISION DATES (PRELIMINARY STAGE ONLY): 11/05/07 3/18/08 10/31/08

SHEET 132R1 OF 214

DESIGN DETAIL SHEET (METRIC) (REV. 3/1/98)
@DATE@ @TIME@ Pen Table File

ORIGINAL SCALE IN MILLIMETERS FOR REDUCED PLANS 0 10 20 30 40 50 60 70 80 90 100

FILE => p:\bb\04-012001\etl\skid beams_10_31_08\alsb101.dgn

100% PS&E
FILE => p:\bb\04-012001\etl\skid beams_10_31_08\alsb101.dgn
TIME PLOTTED => 1:46:42 PM
DATE PLOTTED => 10/31/2008
USERNAME => ALee

DIST	COUNTY	ROUTE	KILOMETER POST TOTAL PROJECT	SHEET NO	TOTAL
04	SF	80	12.6/13.2		

REGISTERED CIVIL ENGINEER

3-15-08
PLANS APPROVAL DATE

Richard V. Nutt, No. C 20665, Exp. 9/30/09, CIVIL, REGISTERED PROFESSIONAL ENGINEER, STATE OF CALIFORNIA

The State of California or its officers or agents shall not be responsible for the accuracy or completeness of electronic copies of this plan sheet.

T.Y. LIN / MOFFATT & NICHOL
Two Harrison Street, Suite 500
San Francisco, CA 94105

CONTRACT NO. 04-0120R4

CONTRACT CHANGE ORDER NO 116-S1

SHEET 4 OF 17

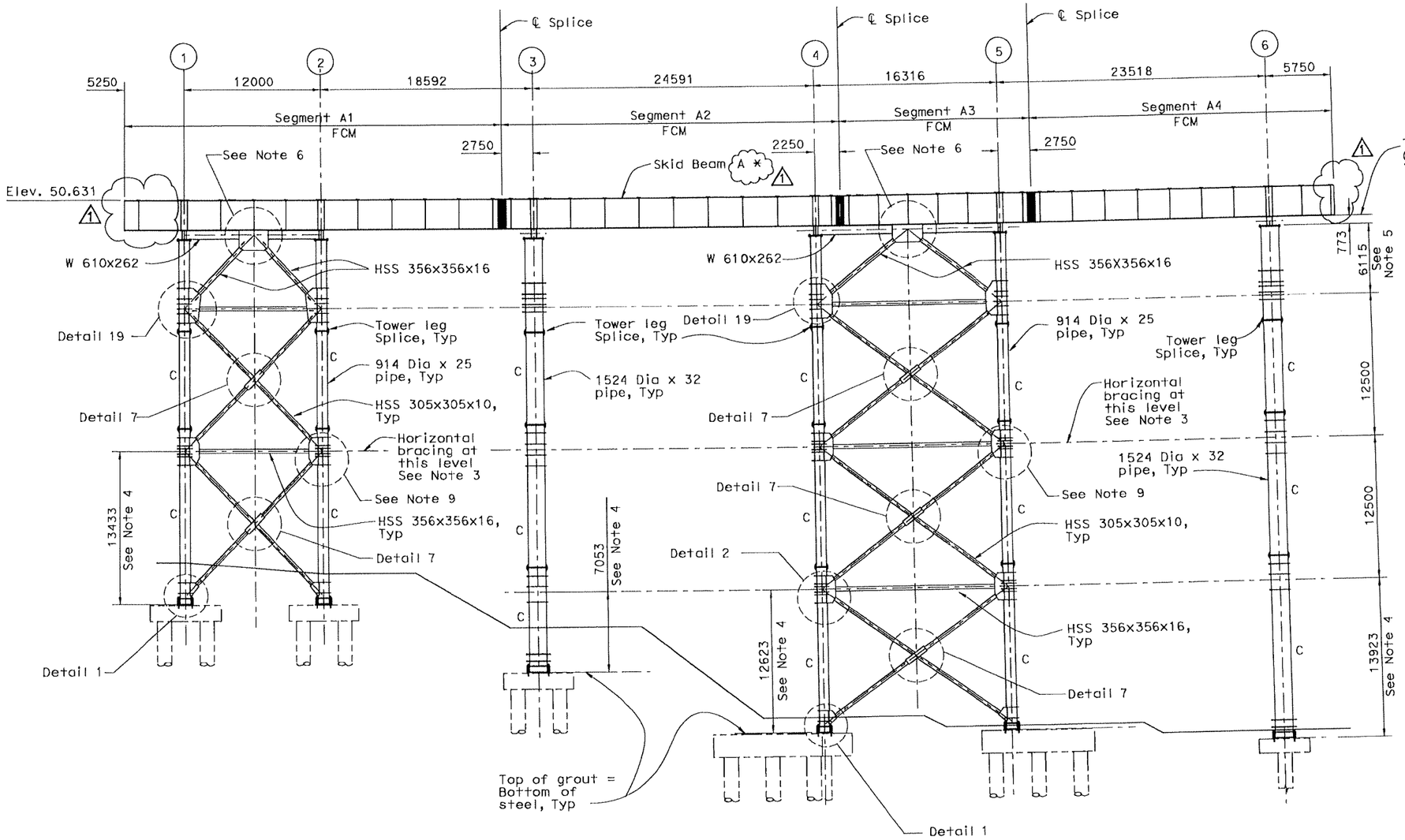

SECTION E-E

1:200
(Skid Bent A)
Grid (AW) shown
Grid (AE) similar

1 * Not all stiffeners shown for clarity

MARK	DATE	DESCRIPTIONS	BY	CH'D	CCO#
		REVISIONS			
1	10/31/08	SKID BEAM CHANGES PER CONTRACTOR'S REQUEST	SS	AML	

CONTRACT CHANGE ORDER NO. _____
SHEET ____ OF ____

LEGEND:

FCM Indicates Fracture Critical Member.

C Indicates Main Members in Compression.

Primary Components of Main Members are flanges, webs, splice plates and cover plates, transverse and longitudinal stiffeners and bearing stiffeners.

WELDING NOTES:

1. All Structural plate interface connections shall be made with continuous complete joint penetration (CJP) welds, unless otherwise shown.

Notes:

1. The Contractor shall verify all controlling field dimensions before ordering or fabricating any material.
2. All bolts shall be 32 Dia A325, unless noted otherwise. For hole size, minimum spacing, edge distance and end distance, see "General Notes No. 2" sheet.
3. For horizontal bracing details, see "Skid Bent Details No. 7" sheet.
4. Dimensions shown to bottom of steel base plate.
5. Dimensions shown to top of steel cap plate.
6. For Detail, see Section S-S on "Skid Bent Details No. 4" sheet.
7. For Detail 1, see "Skid Bent Details No. 2" sheet.
8. For Detail 2, see "Skid Bent Details No. 2" sheet.
9. For Detail, see Section C-C on "Skid Bent Details No. 7" sheet.
10. For Detail 7, see "Skid Bent Details No. 9" sheet.
11. For Detail 19, see "Skid Bent Details No. 3" sheet.

100% PS&E

FILE => p:\bb\04-012001\eti\skid beams_10_31_08\alsbs02.dgn
TIME PLOTTED => 1:46:52 PM
DATE PLOTTED => 10/31/2008
USERNAME => Alee

ALL DIMENSIONS ARE IN MILLIMETERS UNLESS OTHERWISE SHOWN

SAN FRANCISCO OAKLAND BAY BRIDGE
EAST SPAN SEISMIC SAFETY PROJECT

EAST TIE-IN

SKID BENT SECTIONS NO. 2

DESIGN	BY R. Nutt, S. Singh	CHECKED S. Cheng, H. Najm	PREPARED FOR THE STATE OF CALIFORNIA DEPARTMENT OF TRANSPORTATION
DETAILS	BY A. Sudhausen	CHECKED A. Lee	
QUANTITIES	BY H. Nelson	CHECKED A. Lee	

M. Sah, PROJECT ENGINEER
S. Abbas, PROJECT MANAGER
CU EA 0120R4

BRIDGE NO. 34-0006 (TEMP)
KILOMETER POST 12.6

T. Ostrom/M. Whiteside/A. Akinsanya
DESIGN OVERSIGHT
SIGN OFF DATE

DISREGARD PRINTS BEARING EARLIER REVISION DATES → 11/03/07 3/14/08 10/31/08

REVISION DATES (PRELIMINARY STAGE ONLY)

SHEET 134R1 OF 214

DESIGN DETAIL SHEET (METRIC) (REV. 3/1/98)
●DATE● ●TIME● Pen Table File

ORIGINAL SCALE IN MILLIMETERS FOR REDUCED PLANS 0 10 20 30 40 50 60 70 80 90 100

FILE => p:\bb\04-012001\eti\skid beams_10_31_08\alsbs02.dgn

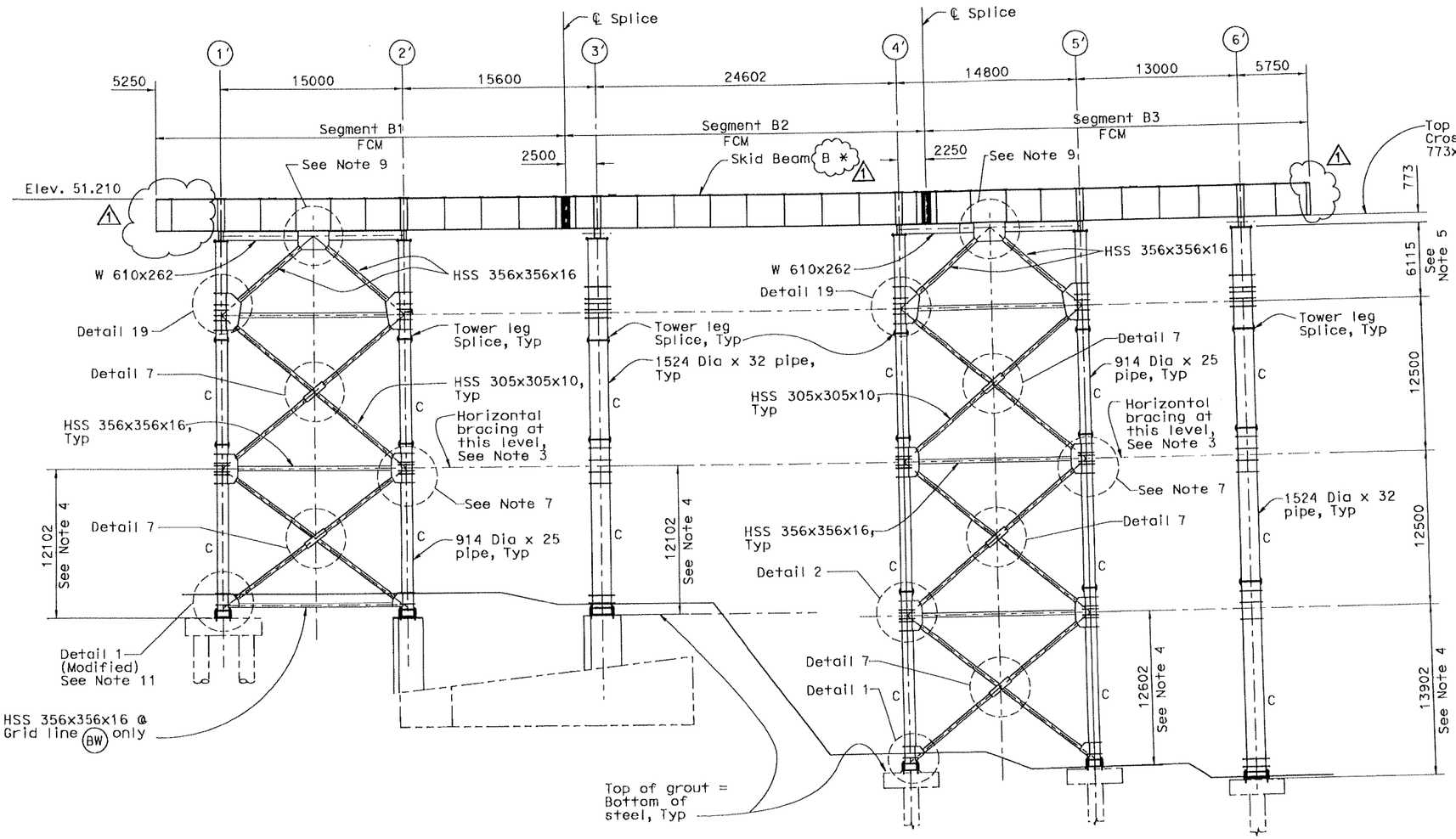

SECTION F-F

1:200

(Skid Bent B)

Grid (BW) shown

Grid (BE) similar

1 * Not all stiffeners shown for clarity

MARK	DATE	DESCRIPTIONS	BY	CH'D	CCO#
		REVISIONS			
1	10/31/08	SKID BEAM CHANGES PER CONTRACTOR'S REQUEST	SS	AML	

CONTRACT CHANGE ORDER NO. _____

SHEET ____ OF ____

Caltrans Metric

DIST	COUNTY	ROUTE	KILOMETER POST TOTAL PROJECT	SHEET No	TOTAL
04	SF	80	12.6/13.2		

REGISTERED CIVIL ENGINEER

3-15-08
PLANS APPROVAL DATE

REGISTERED PROFESSIONAL ENGINEER
Richard V. Nutt
No. C 20665
Exp. 9/30/09
CIVIL
STATE OF CALIFORNIA

The State of California or its officers or agents shall not be responsible for the accuracy or completeness of electronic copies of this plan sheet.

T.Y. LIN / MOFFATT & NICHOL
Two Harrison Street, Suite 500
San Francisco, CA 94105

CONTRACT NO. 04-0120R4

CONTRACT CHANGE ORDER NO 116-S1

SHEET 5 OF 17

LEGEND:

FCM Indicates Fracture Critical Member.

C Indicates Main Members in Compression.

Primary Components of Main Members are flanges, webs, splice plates and cover plates, transverse and longitudinal stiffeners and bearing stiffeners.

WELDING NOTES:

1. All Structural plate interface connections shall be made with continuous complete joint penetration (CJP) welds, unless otherwise shown.

Notes:

1. The Contractor shall verify all controlling field dimensions before ordering or fabricating any material.
2. All bolts shall be 32 Dia A325, unless noted otherwise. For hole size, minimum spacing, edge distance and end distance, see "General Notes No. 2" sheet.
3. For horizontal bracing details, see "Skid Bent Details No. 7" sheet.
4. Dimensions shown to bottom of steel base plate.
5. Dimensions shown to top of steel cap plate.
6. For Details 1 and 2, see "Skid Bent Details No. 2" sheet.
7. For Detail, see Section C-C on "Skid Bent Details No. 7" sheet.
8. For Details 19, see "Skid Bent Details No. 3" sheet.
9. For Detail, see Section S-S on "Skid Bent Details No. 4" sheet.
10. For Detail 7, see "Skid Bent Detail No. 9" sheet.
11. For Detail 1 (modifed), work Detail 1 with Detail 9 on "Skid Bent Details No. 9" sheet when horizontal member is present.

100% PS&E

FILE => p:\bb\04-01200\efl\skid beams_10_31_08\alsbs03.dgn
TIME PLOTTED => 1:46:55 PM
DATE PLOTTED => 10/31/2008
USERNAME => Alee

ALL DIMENSIONS ARE IN MILLIMETERS UNLESS OTHERWISE SHOWN

SAN FRANCISCO OAKLAND BAY BRIDGE
EAST SPAN SEISMIC SAFETY PROJECT

EAST TIE-IN

SKID BENT SECTIONS NO. 3

DESIGN	R. Nutt, S. Singh	CHECKED	S. Cheng, H. Najm
DETAILS	A. Sudhausen	CHECKED	A. Lee
QUANTITIES	H. Nelson	CHECKED	A. Lee

PREPARED FOR THE STATE OF CALIFORNIA
DEPARTMENT OF TRANSPORTATION

M. Sah
PROJECT ENGINEER
S. Abbas
PROJECT MANAGER
CU
EA 0120R4

BRIDGE NO. 34-0006 (TEMP)
KILOMETER POST 12.6

DISREGARD PRINTS BEARING EARLIER REVISION DATES →
REVISION DATES (PRELIMINARY STAGE ONLY): 11/09/07, 3/18/08, 10/31/08

SHEET 135R1 OF 214

T. Ostrom/M. Whiteside/A. Akinsanya
DESIGN OVERSIGHT

SIGN OFF DATE

DESIGN DETAIL SHEET (METRIC) (REV. 3/1/98)
●DATE● ●TIME● Pen Table File

ORIGINAL SCALE IN MILLIMETERS FOR REDUCED PLANS 0 10 20 30 40 50 60 70 80 90 100

FILE => p:\bb\04-01200\efl\skid beams_10_31_08\alsbs03.dgn

DIST	COUNTY	ROUTE	KILOMETER POST TOTAL PROJECT	SHEET NO	TOTAL
04	SF	80	12.6/13.2		

REGISTERED CIVIL ENGINEER

3-15-08
PLANS APPROVAL DATE

Richard V. Nutt, No. C 20665, Exp. 9/30/09, CIVIL, STATE OF CALIFORNIA

The State of California or its officers or agents shall not be responsible for the accuracy or completeness of electronic copies of this plan sheet.

T.Y. LIN / MOFFATT & NICHOL
Two Harrison Street, Suite 500
San Francisco, CA 94105

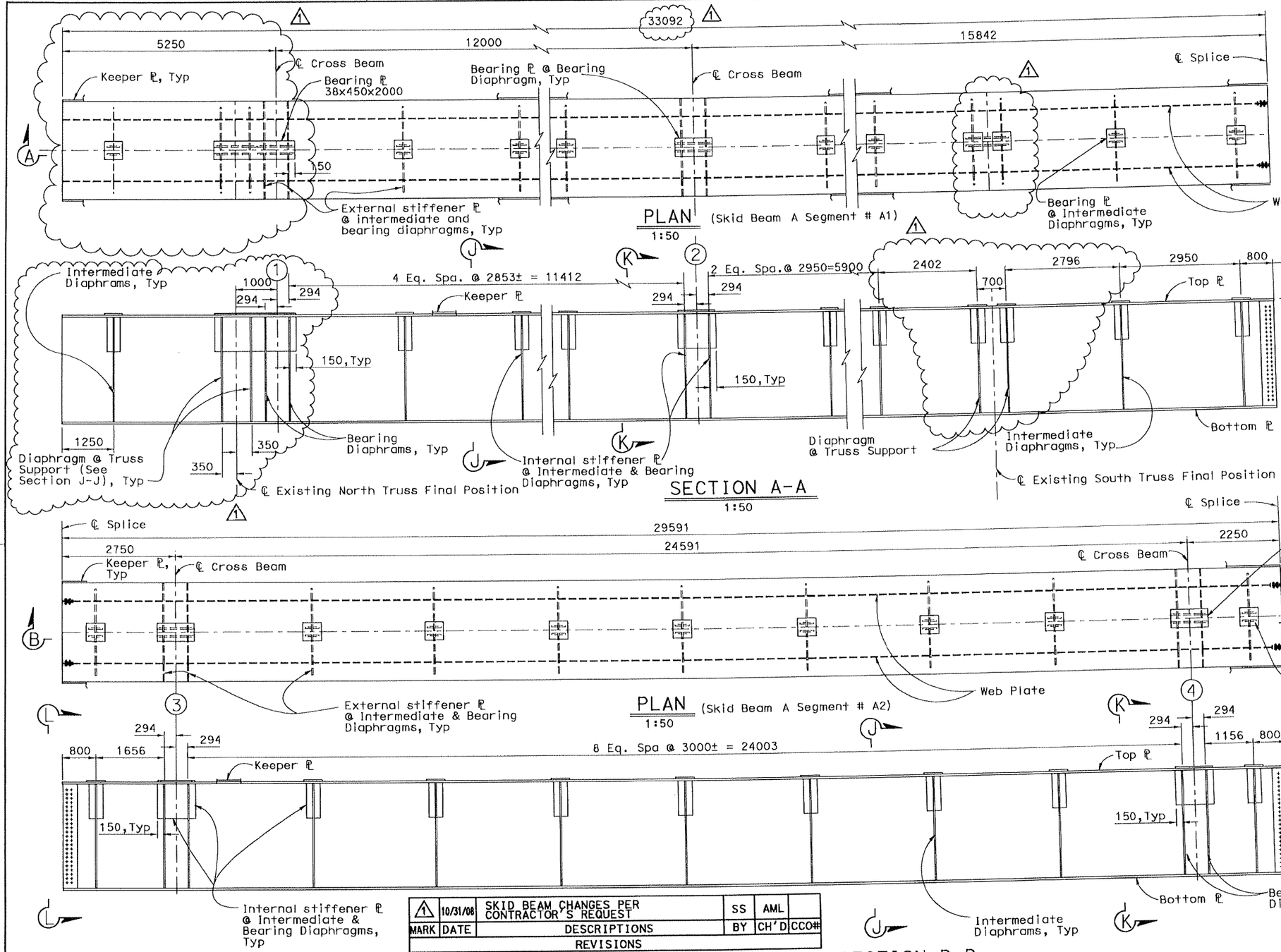

Notes:

1. The Contractor shall verify all controlling field dimensions before ordering or fabricating any material.
2. All bolts shall be 32 Dia A325, unless noted otherwise. For hole size, minimum spacing, edge distance and end distance, see "General Notes No. 2" sheet.
3. For Section J-J, K-K and L-L, see "Skid Beam Details No. 5" sheet.

MARK	DATE	REVISIONS	BY	CH'D	CCO#
1	10/31/08	SKID BEAM CHANGES PER CONTRACTOR'S REQUEST	SS	AML	

CONTRACT CHANGE ORDER NO. ____
SHEET ____ OF ____

ALL DIMENSIONS ARE IN MILLIMETERS UNLESS OTHERWISE SHOWN

CONTRACT NO. 04-0120R4
CONTRACT CHANGE ORDER NO 116-S1
SHEET 6 OF 17

SAN FRANCISCO OAKLAND BAY BRIDGE
EAST SPAN SEISMIC SAFETY PROJECT

EAST TIE-IN

SKID BEAM DETAILS NO. 1

DESIGN	BY R. Nutt, S. Singh	CHECKED S. Cheng, H. Najm
DETAILS	BY A. Sudhausen	CHECKED A. Lee
QUANTITIES	BY H. Nelson	CHECKED A. Lee

T. Ostrom/M. Whiteside/A. Akinsanya
DESIGN OVERSIGHT

SIGN OFF DATE

PREPARED FOR THE STATE OF CALIFORNIA
DEPARTMENT OF TRANSPORTATION

M. Sah
PROJECT ENGINEER
S. Abbas
PROJECT MANAGER
CU
EA 0120R4

BRIDGE NO. 34-0006 (TEMP)
KILOMETER POST 12.6

DISREGARD PRINTS BEARING EARLIER REVISION DATES →
REVISION DATES (PRELIMINARY STAGE ONLY): 11/05/01, 3/16/06, 10/31/08

SHEET 147R1 OF 214

DESIGN DETAIL SHEET (METRIC) (REV. 3/1/98)
◆DATE◆ ◆TIME◆ Pen Table File

ORIGINAL SCALE IN MILLIMETERS FOR REDUCED PLANS 0 10 20 30 40 50 60 70 80 90 100

FILE => p:\bb\04-012001\etl\skid beams_10_31_08\MODIFIED alsbmd01.dgn

100% PS&E

FILE => p:\bb\04-012001\etl\skid beams_10_31_08\MODIFIED alsbmd01.dgn
TIME PLOTTED => 1:47:03 PM
DATE PLOTTED => 10/31/2008
USERNAME => ALee

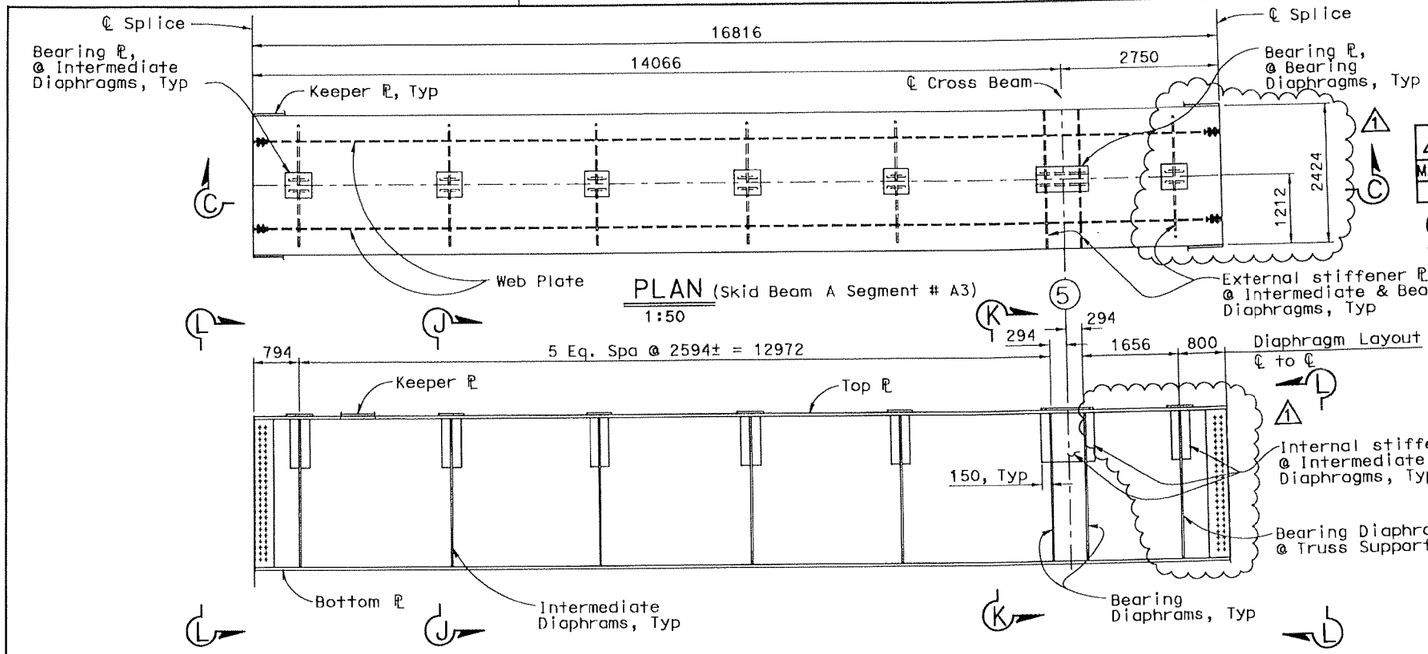

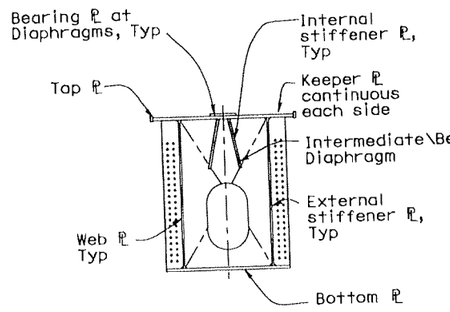

END VIEW
1:50

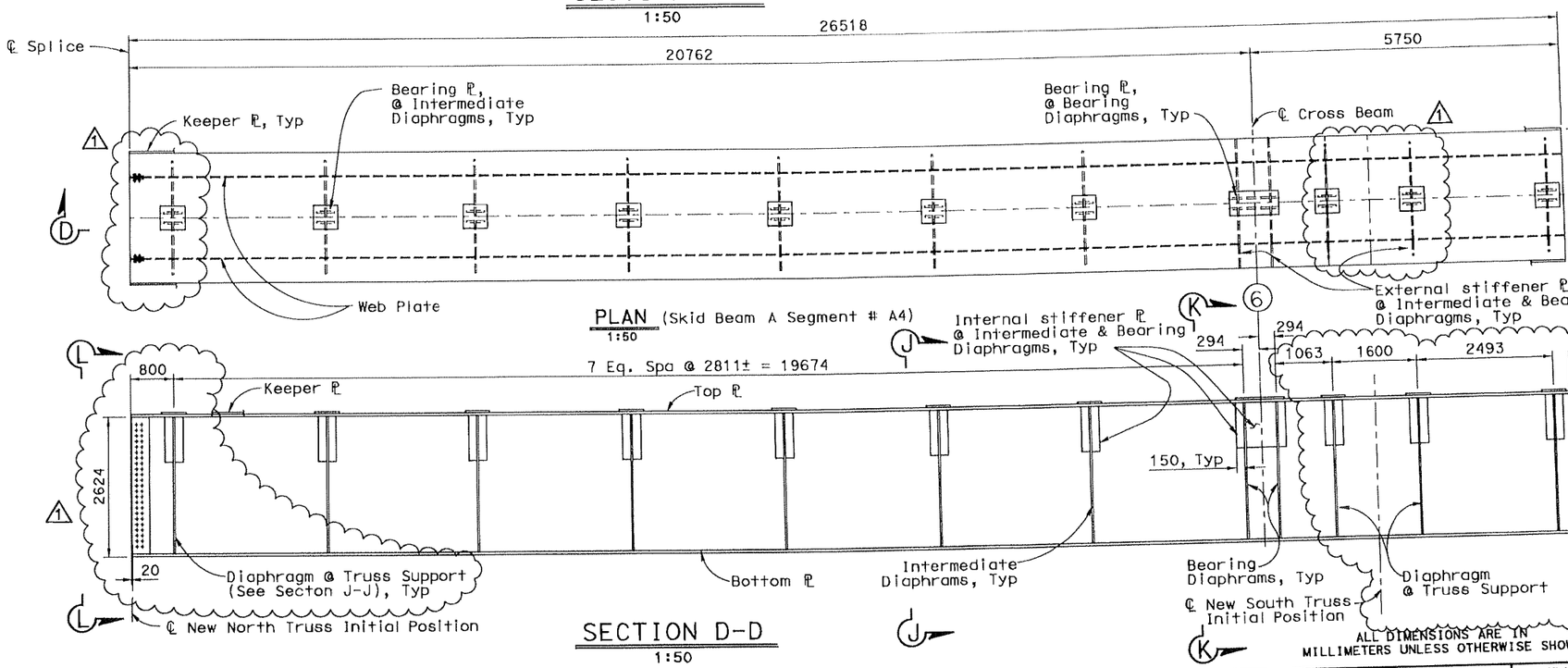

Notes:

1. The Contractor shall verify all controlling field dimensions before ordering or fabricating any material.
2. All bolts shall be 32 Dia A325, unless noted otherwise. For hole size, minimum spacing, edge distance and end distance, see "General Notes No. 2" sheet.
3. For Section J-J, K-K and L-L, see "Skid Beam Details No. 5" sheet.

ALL DIMENSIONS ARE IN MILLIMETERS UNLESS OTHERWISE SHOWN

MARK	DATE	DESCRIPTIONS	BY	CH'D	CCO#
1	10/31/08	SKID BEAM CHANGES PER CONTRACTOR'S REQUEST	SS	AML	

REVISIONS

CONTRACT CHANGE ORDER NO. ____
SHEET ___ OF ___

DIST	COUNTY	ROUTE	KILOMETER POST TOTAL PROJECT	SHEET No	TOTAL
04	SF	80	12.6/13.2		

REGISTERED CIVIL ENGINEER

3-15-08
PLANS APPROVAL DATE

Richard V. Nutt, No. C 20665, Exp. 9/30/09, CIVIL, STATE OF CALIFORNIA

The State of California or its officers or agents shall not be responsible for the accuracy or completeness of electronic copies of this plan sheet.

T.Y. LIN / MOFFATT & NICHOL
Two Harrison Street, Suite 500
San Francisco, CA 94105

CONTRACT NO. 04-0120R4
CONTRACT CHANGE ORDER NO 116-S1
SHEET 7 OF 17

DESIGN	BY R. Nutt, S. Singh	CHECKED S. Cheng, H. Najm	PREPARED FOR THE STATE OF CALIFORNIA DEPARTMENT OF TRANSPORTATION	M. Sah PROJECT ENGINEER	BRIDGE NO. 34-0006 (TEMP)
DETAILS	BY A. Sudhausen	CHECKED A. Lee		S. Abbas PROJECT MANAGER	KILOMETER POST 12.6
QUANTITIES	BY H. Nelson	CHECKED A. Lee		CU EA 0120R4	DISREGARD PRINTS BEARING EARLIER REVISION DATES →

T. Ostrom/M. Whiteside/A. Akinsanya
DESIGN OVERSIGHT

SIGN OFF DATE

DESIGN DETAIL SHEET (METRIC) (REV. 3/1/98)
●DATE● ●TIME● Pen Table File

ORIGINAL SCALE IN MILLIMETERS FOR REDUCED PLANS 0 10 20 30 40 50 60 70 80 90 100

REVISION DATES (PRELIMINARY STAGE ONLY): 11/07/07 | 3/18/08 | 10/31/08

SAN FRANCISCO OAKLAND BAY BRIDGE EAST SPAN SEISMIC SAFETY PROJECT

EAST TIE-IN

SKID BEAM DETAILS NO. 2

SHEET 148R1 OF 214

FILE => p:\bb\04-012001\etl\skid beams_10_31_08\MODIFIED alsbmd02.dgn

DATE PLOTTED => 10/31/2008 TIME PLOTTED => 1:47:05 PM USERNAME => ALee

100% PS&E

DIST	COUNTY	ROUTE	KILOMETER POST TOTAL PROJECT	SHEET No	TOTAL
04	SF	80	12.6/13.2		

REGISTERED CIVIL ENGINEER

3-15-08
PLANS APPROVAL DATE

Richard Y. Nutt, No. C 20665, Exp. 9/30/09, CIVIL, State of California

The State of California or its officers or agents shall not be responsible for the accuracy or completeness of electronic copies of this plan sheet.

T.Y. LIN / MOFFATT & NICHOL
Two Harrison Street, Suite 500
San Francisco, CA 94105

Caltrans Metric

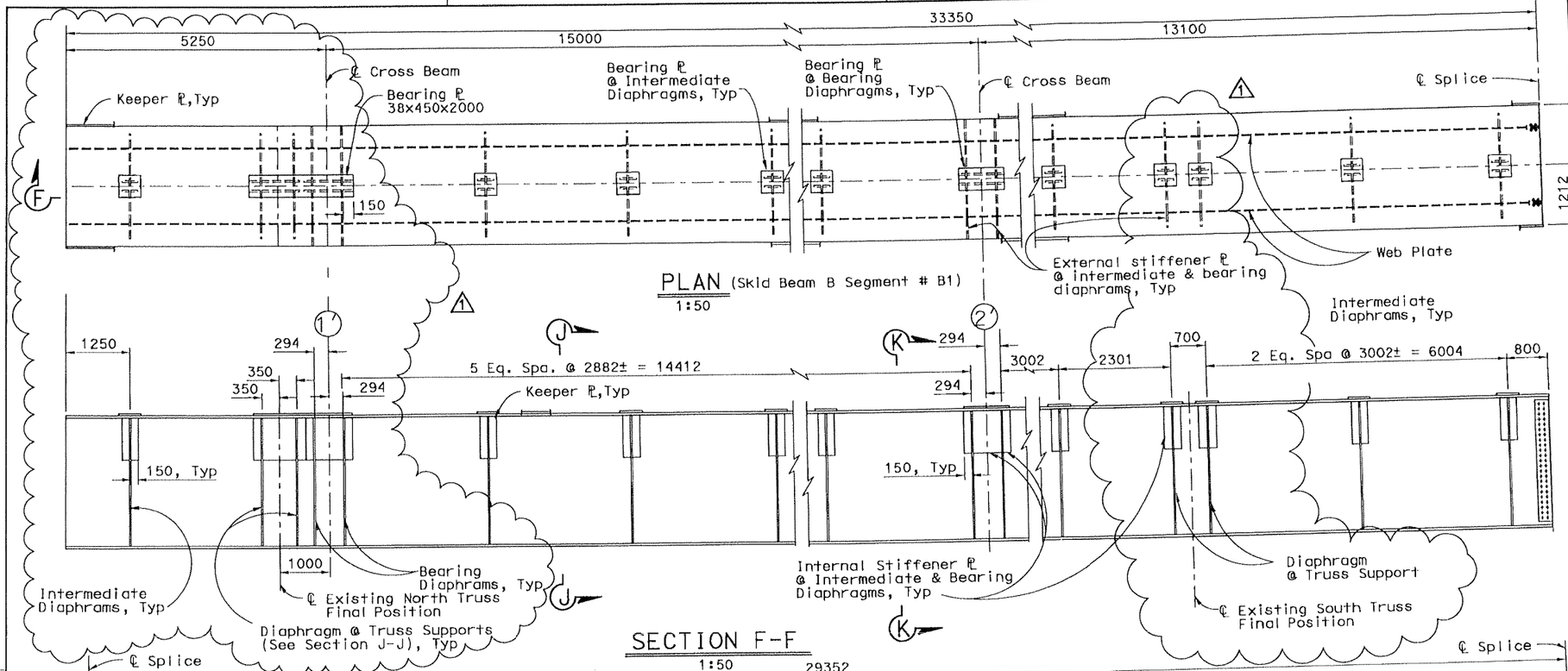

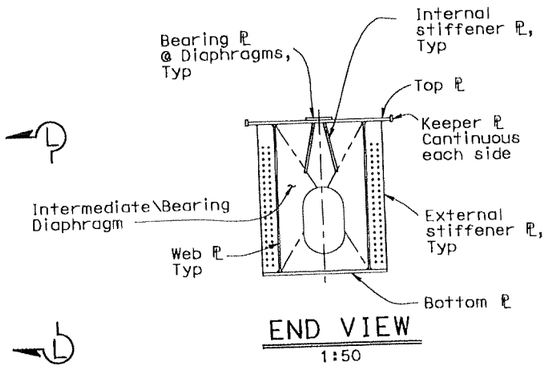

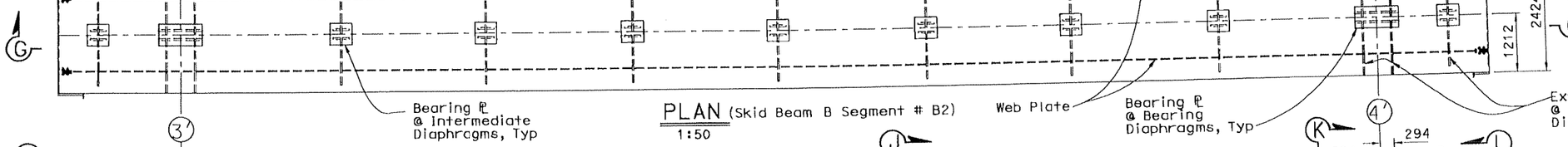

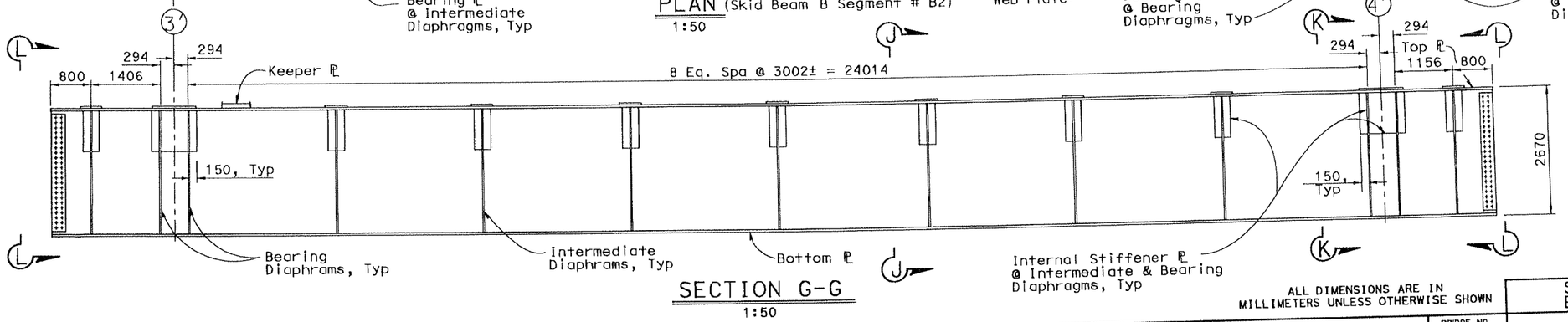

Notes:

1. The Contractor shall verify all controlling field dimensions before ordering or fabricating any material.
2. All bolts shall be 32 Dia A325, unless noted otherwise. For hole size, minimum spacing, edge distance and end distance, see "General Notes No. 2" sheet.
3. For Section J-J, K-K and L-L, see "Skid Beam Details No. 5" sheet.

ALL DIMENSIONS ARE IN MILLIMETERS UNLESS OTHERWISE SHOWN

MARK	DATE	DESCRIPTIONS	BY	CH'D	CCO#
1	10/31/08	SKID BEAM CHANGES PER CONTRACTOR'S REQUEST	SS	AML	

REVISIONS

CONTRACT CHANGE ORDER NO. 116-S1
SHEET 8 OF 17

100% PS&E

SAN FRANCISCO OAKLAND BAY BRIDGE
EAST SPAN SEISMIC SAFETY PROJECT

EAST TIE-IN

SKID BEAM DETAILS NO. 3

DESIGN	BY R. Nutt, S. Singh	CHECKED	S. Cheng, H. Najm
DETAILS	BY A. Sudhausen	CHECKED	A. Lee
QUANTITIES	BY H. Nelson	CHECKED	A. Lee

T. Ostrom/M. Whiteside/A. Akinsanya
DESIGN OVERSIGHT

SIGN OFF DATE

PREPARED FOR THE STATE OF CALIFORNIA
DEPARTMENT OF TRANSPORTATION

M. Sah
PROJECT ENGINEER
S. Abbas
PROJECT MANAGER

CU
EA 0120R4

BRIDGE NO. 34-0006 (TEMP)
KILOMETER POST 12.6

DISREGARD PRINTS BEARING EARLIER REVISION DATES →
REVISION DATES (PRELIMINARY STAGE ONLY): 11/09/07, 2/16/08, 10/31/08

SHEET 149R1 OF 214

DESIGN DETAIL SHEET (METRIC) (REV. 3/1/98)
@DATE@ @TIME@ Pen Table File

ORIGINAL SCALE IN MILLIMETERS FOR REDUCED PLANS 0 10 20 30 40 50 60 70 80 90 100

FILE => p:\bb\04-012001\etl\skid beams_10_31_08\MODIFIED alsbmd03.dgn

DATE PLOTTED => 10/31/2008 TIME PLOTTED => 1:46:58 PM
USERNAME => Alee
FILE => p:\bb\04-012001\etl\skid beams_10_31_08\MODIFIED alsbmd03.dgn

DIST	COUNTY	ROUTE	KILOMETER POST TOTAL PROJECT	SHEET No	TOTAL
04	SF	80	12.6/13.2		

REGISTERED CIVIL ENGINEER

3-15-08
PLANS APPROVAL DATE

REGISTERED PROFESSIONAL ENGINEER — Richard V. Nutt — No. C 20665 — Exp. 9/30/09 — CIVIL — STATE OF CALIFORNIA

The State of California or its officers or agents shall not be responsible for the accuracy or completeness of electronic copies of this plan sheet.

T.Y. LIN / MOFFATT & NICHOL
Two Harrison Street, Suite 500
San Francisco, CA 94105

100% PS&E

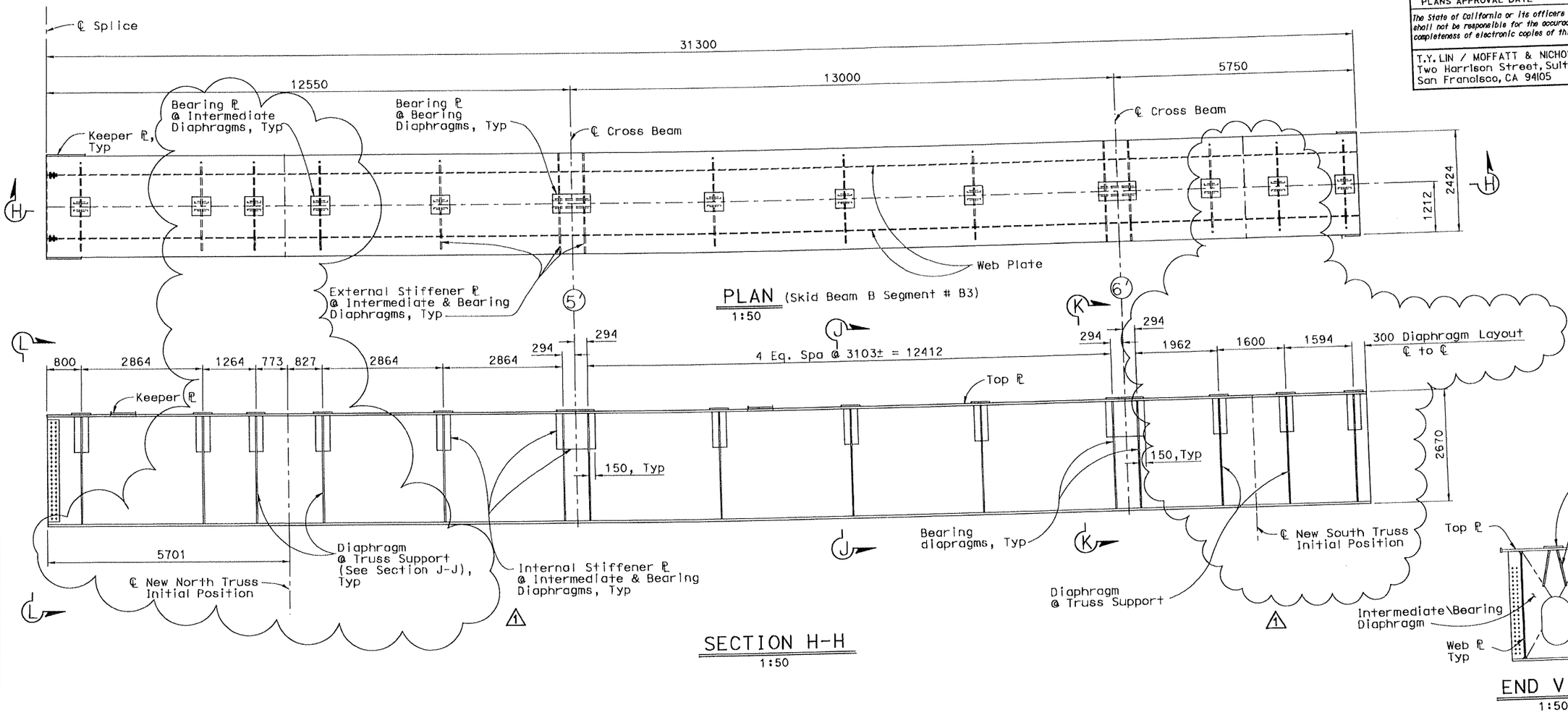

Notes:

1. The Contractor shall verify all controlling field dimensions before ordering or fabricating any material.
2. All bolts shall be 32 Dia A325, unless noted otherwise. For hole size, minimum spacing, edge distance and end distance, see "General Notes No. 2" sheet.
3. For Section J-J, K-K and L-L, see "Skid Beam Details No. 5" sheet.

MARK	DATE	DESCRIPTIONS	BY	CH'D	CCO#
		REVISIONS			
1	10/31/08	SKID BEAM CHANGES PER CONTRACTOR'S REQUEST	SS	AML	

CONTRACT CHANGE ORDER NO. 116-S1
SHEET 9 OF 17

ALL DIMENSIONS ARE IN MILLIMETERS UNLESS OTHERWISE SHOWN

SAN FRANCISCO OAKLAND BAY BRIDGE
EAST SPAN SEISMIC SAFETY PROJECT

EAST TIE-IN

SKID BEAM DETAILS NO. 4

DESIGN	R. Nutt, S. Singh	CHECKED	S. Cheng, H. Najm
DETAILS	A. Sudhausen	CHECKED	A. Lee
QUANTITIES	H. Nelson	CHECKED	A. Lee

T. Ostrom/M. Whiteside/A. Akinsanya
DESIGN OVERSIGHT

SIGN OFF DATE

PREPARED FOR THE STATE OF CALIFORNIA
DEPARTMENT OF TRANSPORTATION

M. Sah
PROJECT ENGINEER
S. Abbas
PROJECT MANAGER

CU
EA 0120R4

BRIDGE NO. 34-0006 (TEMP)
KILOMETER POST 12.6

DISREGARD PRINTS BEARING EARLIER REVISION DATES

REVISION DATES (PRELIMINARY STAGE ONLY): 11/09/07 | 3/15/08 | 10/31/08

SHEET 150R1 OF 214

ORIGINAL SCALE IN MILLIMETERS FOR REDUCED PLANS 0 10 20 30 40 50 60 70 80 90 100

DESIGN DETAIL SHEET (METRIC) (REV. 3/1/88)
℗DATE℗ ℗TIME℗ Pen Table File

FILE => p:\bb\04-012001\etl\skid beams_10_31_08\MODIFIED alsbmd04.dgn

DATE PLOTTED => 10/31/2008 TIME PLOTTED => 1:47:00 PM

USERNAME => ALee

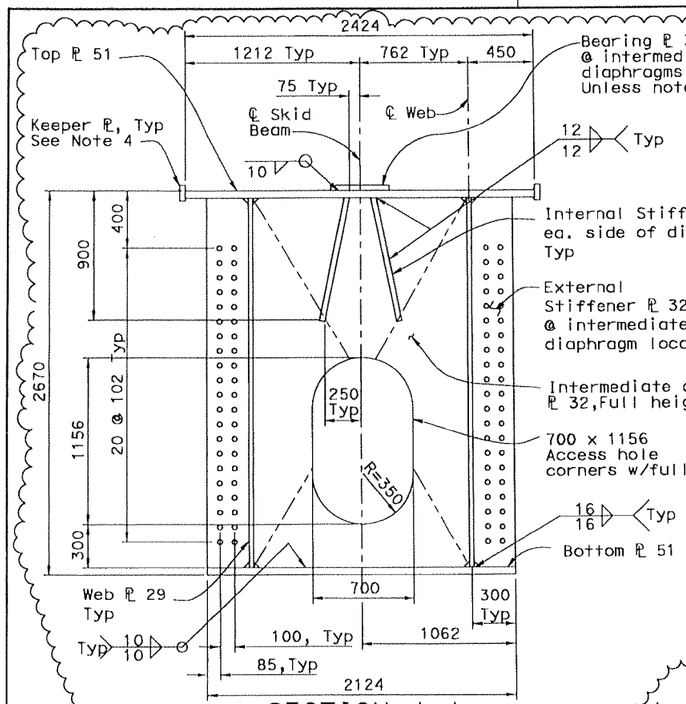

SECTION J-J

1:20

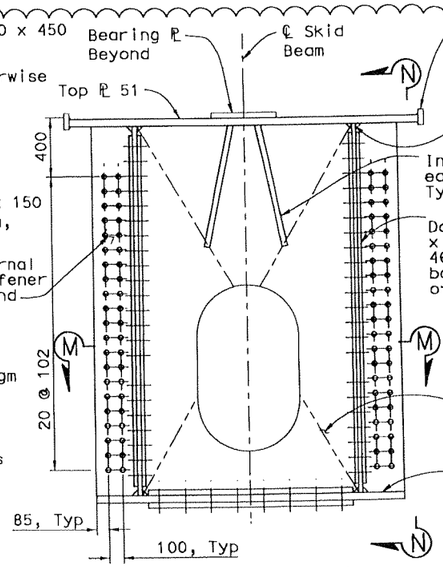

SECTION L-L

1:20

Typical Section @ Splice

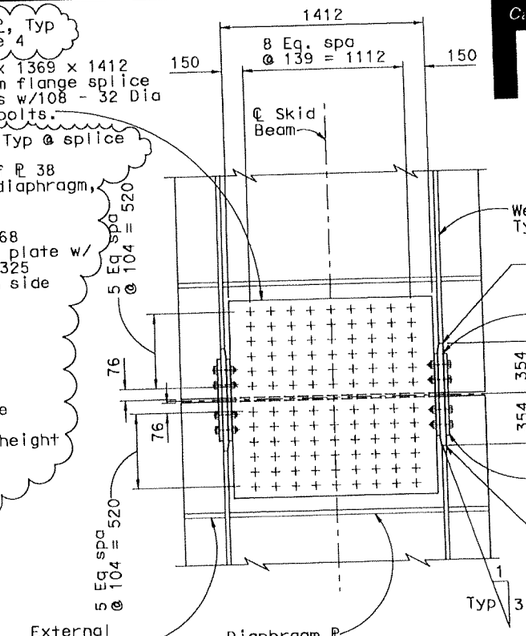

SECTION M-M

1:20

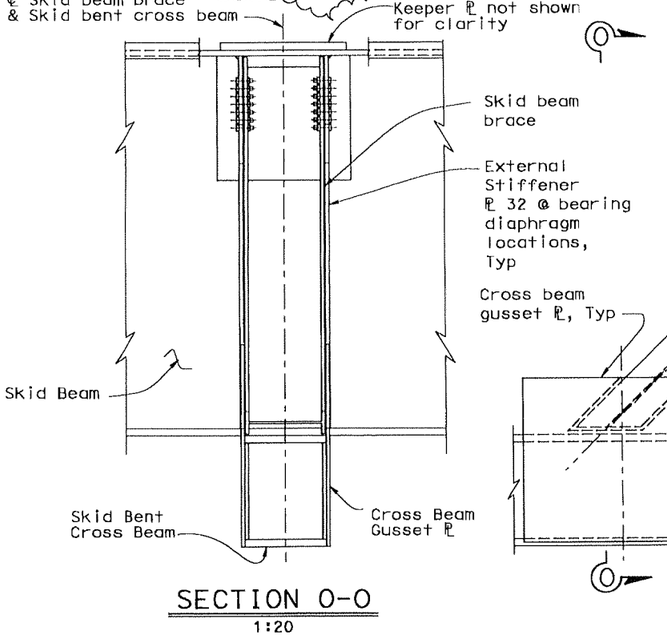

SECTION O-O

1:20

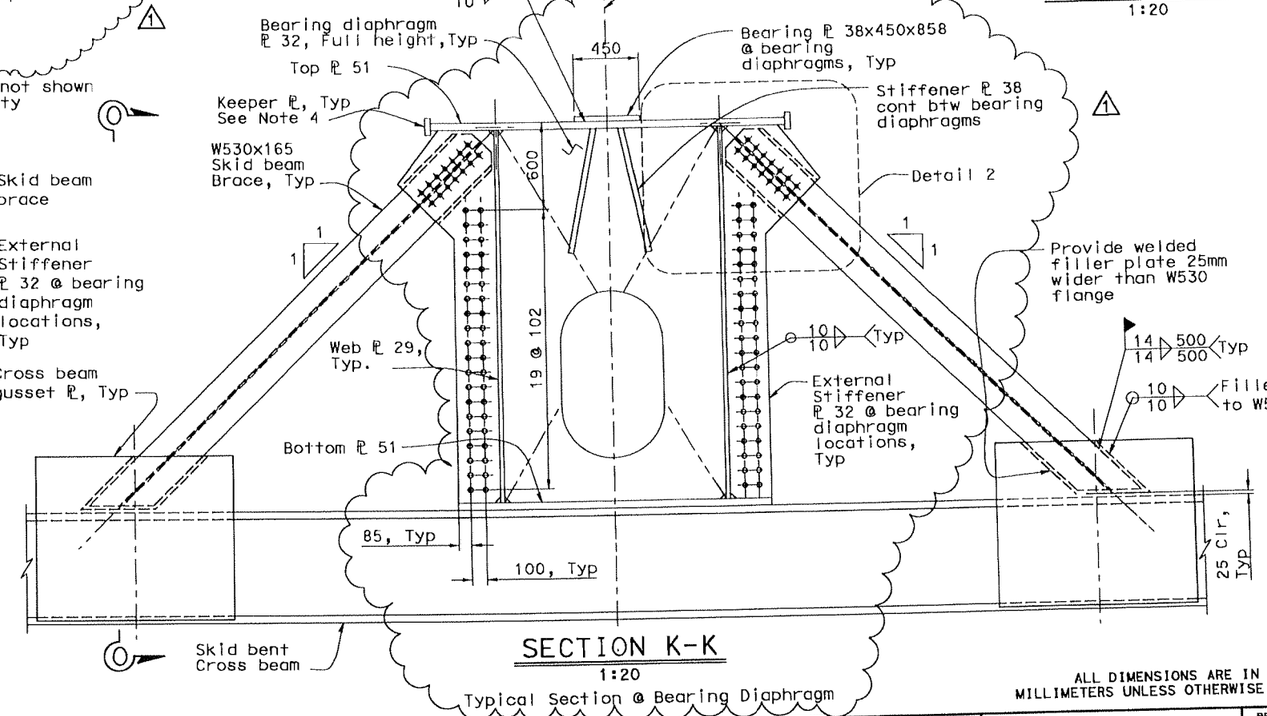

SECTION K-K

1:20

Typical Section @ Bearing Diaphragm

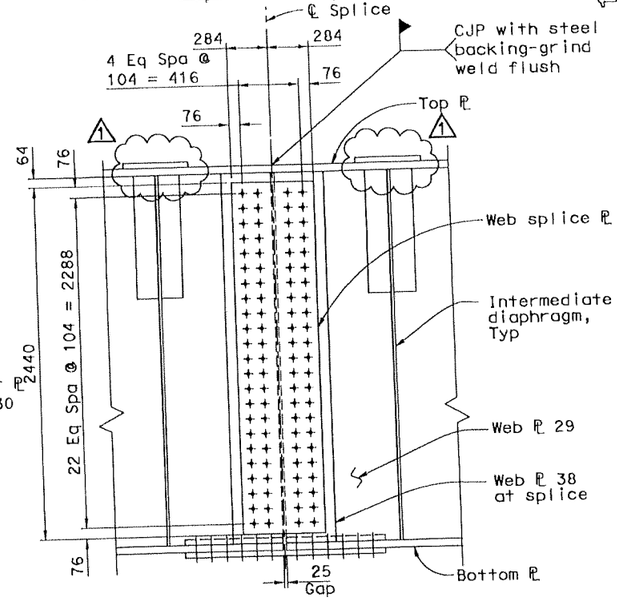

SECTION N-N

1:20

Notes:

1. The Contractor shall verify all controlling field dimensions before ordering or fabricating any material.
2. All bolts shall be 32 Dia A325, unless noted otherwise. For hole size, minimum spacing, edge distance and end distance, see "General Notes No. 2" sheet.
3. For Detail 2 see "Skid Beam Details No. 6" sheet.
4. For Keeper ℙ Detail, see "Skid Beam Details 6" sheet.

MARK	DATE	REVISIONS	BY	CH'D	CCO#
1	10/31/08	SKID BEAM CHANGES PER CONTRACTOR'S REQUEST	SS	AML	

ALL DIMENSIONS ARE IN MILLIMETERS UNLESS OTHERWISE SHOWN

DIST	COUNTY	ROUTE	KILOMETER POST TOTAL PROJECT	SHEET No	TOTAL
04	SF	80	12.6/13.2		

REGISTERED CIVIL ENGINEER

3-15-08
PLANS APPROVAL DATE

REGISTERED PROFESSIONAL ENGINEER Richard V. Nutt No. C 20665 Exp. 9/30/09 CIVIL STATE OF CALIFORNIA

The State of California or its officers or agents shall not be responsible for the accuracy or completeness of electronic copies of this plan sheet.

T.Y.LIN / MOFFATT & NICHOL
Two Harrison Street, Suite 500
San Francisco, CA 94105

CONTRACT CHANGE ORDER NO. 116-S1
SHEET 10 OF 17

100% PS&E

DATE PLOTTED => 10/31/2008 TIME PLOTTED => 1:46:45 PM
FILE => p:\bb\04-012001\etl\skid beams_10_31_08\alsbmd05.dgn
USERNAME => ALee

T. Ostrom/M. Whiteside/A. Akinsanya
DESIGN OVERSIGHT

SIGN OFF DATE

	BY	CHECKED
DESIGN	R. Nutt, S. Singh	S. Cheng, H. Najm
DETAILS	A. Sudhausen	A. Lee
QUANTITIES	H. Nelson	A. Lee

PREPARED FOR THE STATE OF CALIFORNIA
DEPARTMENT OF TRANSPORTATION

W. Sah
PROJECT ENGINEER
S. Abbas
PROJECT MANAGER
CU
EA 0120R4

BRIDGE NO. 34-0006 (TEMP)
KILOMETER POST 12.6

DISREGARD PRINTS BEARING EARLIER REVISION DATES

REVISION DATES (PRELIMINARY STAGE ONLY): 11/09/07 3/15/08 10/31/08

SAN FRANCISCO OAKLAND BAY BRIDGE
EAST SPAN SEISMIC SAFETY PROJECT

EAST TIE-IN

SKID BEAM DETAILS NO. 5

SHEET 151R1 OF 214

DESIGN DETAIL SHEET (METRIC) (REV. 3/1/98)
●DATE● ●TIME● Pen Table File

ORIGINAL SCALE IN MILLIMETERS FOR REDUCED PLANS 0 10 20 30 40 50 60 70 80 90 100

FILE => p:\bb\04-012001\etl\skid beams_10_31_08\alsbmd05.dgn

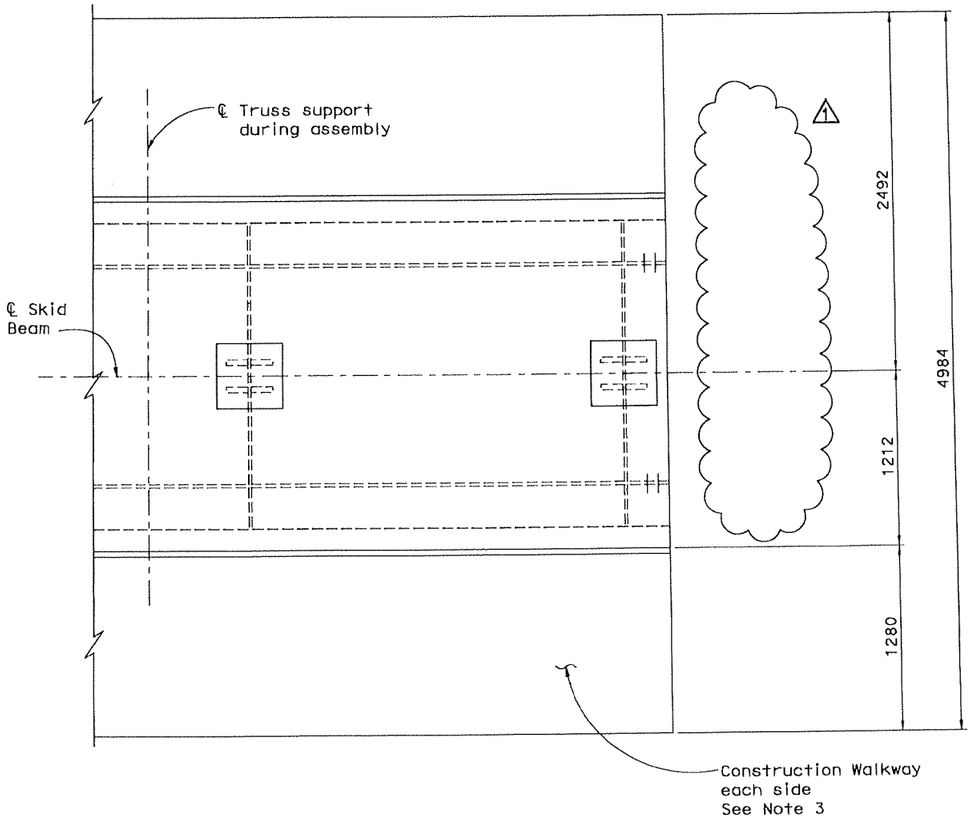

SKID BEAM WALKWAY PLAN
1:20

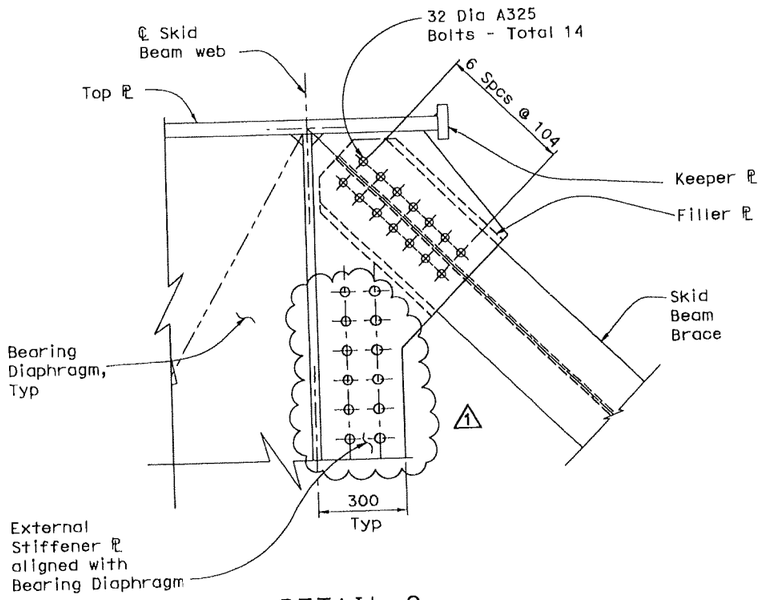

DETAIL 2
1:10

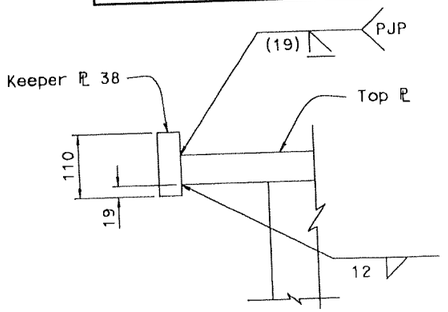

KEEPER ℄ DETAIL
1:5

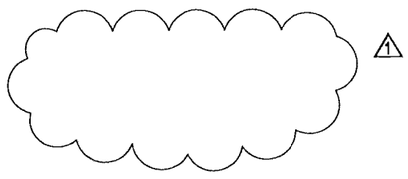

MARK	DATE	DESCRIPTIONS	BY	CH'D	CCO#
1	10/31/08	SKID BEAM CHANGES PER CONTRACTOR'S REQUEST	SS	AML	
		REVISIONS			

CONTRACT CHANGE ORDER NO. 116-S1
SHEET 11 OF 17

Notes:

1. The Contractor shall verify all controlling field dimensions before ordering or fabricating any material.
2. All bolts shall be 32 Dia A325, unless noted otherwise. For hole size, minimum spacing, edge distance and end distance, see "General Notes No. 2" sheet.
3. For Construction Walkway Details, see "Skid Beam Details No. 7" sheet.

DIST	COUNTY	ROUTE	KILOMETER POST TOTAL PROJECT	SHEET No	TOTAL
04	SF	80	12.6/13.2		

Caltrans Metric

REGISTERED CIVIL ENGINEER

3-15-08
PLANS APPROVAL DATE

REGISTERED PROFESSIONAL ENGINEER — Richard V. Nutt — No. C 20665 — Exp. 9/30/09 — CIVIL — STATE OF CALIFORNIA

The State of California or its officers or agents shall not be responsible for the accuracy or completeness of electronic copies of this plan sheet.

T.Y. LIN / MOFFATT & NICHOL
Two Harrison Street, Suite 500
San Francisco, CA 94105

100% PS&E

FILE => p:\bb\04-012001\eti\skid beams_10_31_08\alsbmd06.dgn
TIME PLOTTED => 1:46:47 PM
DATE PLOTTED => 10/31/2008
USERNAME => Alee

ALL DIMENSIONS ARE IN MILLIMETERS UNLESS OTHERWISE SHOWN

SAN FRANCISCO OAKLAND BAY BRIDGE
EAST SPAN SEISMIC SAFETY PROJECT

EAST TIE-IN

SKID BEAM DETAILS NO. 6

DESIGN	BY R. Nutt, S. Singh	CHECKED S. Cheng, H. Najm	
DETAILS	BY A. Sudhausen	CHECKED A. Lee	
QUANTITIES	BY H. Nelson	CHECKED A. Lee	

PREPARED FOR THE STATE OF CALIFORNIA
DEPARTMENT OF TRANSPORTATION

M. Sah — PROJECT ENGINEER
S. Abbas — PROJECT MANAGER

BRIDGE NO. 34-0006 (TEMP)
KILOMETER POST 12.6

CU
EA 0120R4

T. Ostrom/M. Whiteside/A. Akinsanya
DESIGN OVERSIGHT

SIGN OFF DATE

DESIGN DETAIL SHEET (METRIC) (REV. 3/1/98)
●DATE● ●TIME● Pen Table File

ORIGINAL SCALE IN MILLIMETERS FOR REDUCED PLANS 0 10 20 30 40 50 60 70 80 90 100

FILE => p:\bb\04-012001\eti\skid beams_10_31_08\alsbmd06.dgn

DISREGARD PRINTS BEARING EARLIER REVISION DATES → 11/05/07 3/14/08 10/31/08

REVISION DATES (PRELIMINARY STAGE ONLY)

SHEET 152R1 OF 214

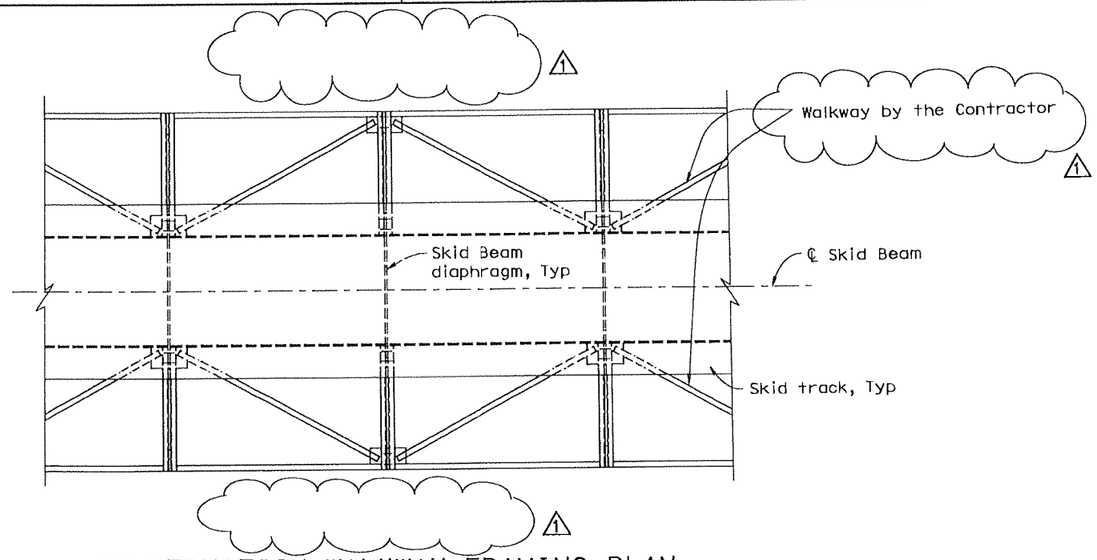

CONSTRUCTION WALKWAY FRAMING PLAN

1:40

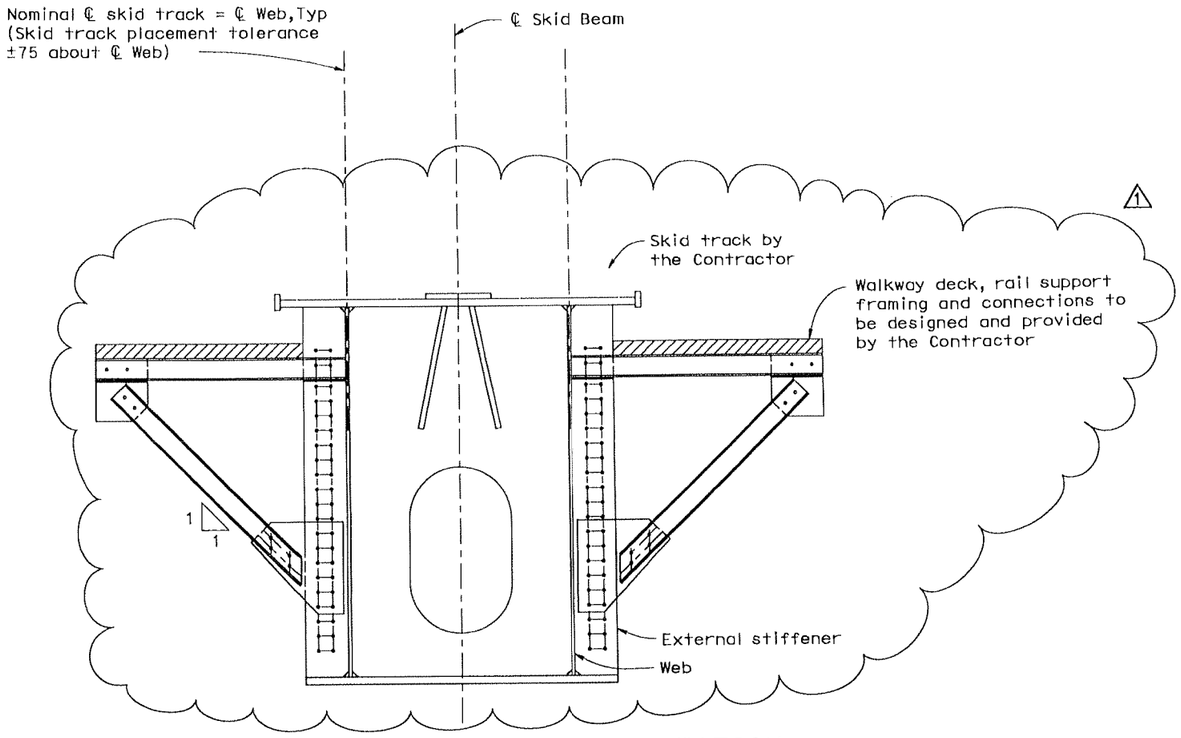

CONSTRUCTION WALKWAY FRAMING SECTION

1:20

Caltrans Metric

DIST	COUNTY	ROUTE	KILOMETER POST TOTAL PROJECT	SHEET No	TOTAL
04	SF	80	12.6/13.2		

REGISTERED CIVIL ENGINEER

3-15-08
PLANS APPROVAL DATE

REGISTERED PROFESSIONAL ENGINEER
Richard V. Nutt
No. C 20665
Exp. 9/30/09
CIVIL
STATE OF CALIFORNIA

The State of California or its officers or agents shall not be responsible for the accuracy or completeness of electronic copies of this plan sheet.

T.Y.LIN / MOFFATT & NICHOL
Two Harrison Street, Suite 500
San Franolsco, CA 94105

MARK	DATE	DESCRIPTIONS	BY	CH'D	CCO#
1	10/31/08	SKID BEAM CHANGES PER CONTRACTOR'S REQUEST	SS	AML	

REVISIONS

CONTRACT CHANGE ORDER NO. 116-S1
SHEET 12 OF 17

100% PS&E

Notes:

1. The Contractor shall verify all controlling field dimensions before ordering or fabricating any material.
2. All bolts shall be 32 Dia A325, unless noted otherwise. For hole size, minimum spacing, edge distance and end distance, see "General Notes No. 2" sheet.

T. Ostrom/M. Whiteside/A. Akinsanya	DESIGN	R. Nutt, S. Singh	S. Cheng, H. Najm
DESIGN OVERSIGHT	DETAILS	A. Sudhausen	A. Lee
SIGN OFF DATE	QUANTITIES	H. Nelson	A. Lee

PREPARED FOR THE STATE OF CALIFORNIA
DEPARTMENT OF TRANSPORTATION

ALL DIMENSIONS ARE IN MILLIMETERS UNLESS OTHERWISE SHOWN

M. Soh, PROJECT ENGINEER
S. Abbas, PROJECT MANAGER
CU
EA 0120R4

BRIDGE NO. 34-0006 (TEMP)
KILOMETER POST 12.6

SAN FRANCISCO OAKLAND BAY BRIDGE
EAST SPAN SEISMIC SAFETY PROJECT

EAST TIE-IN

SKID BEAM DETAILS NO. 7

DISREGARD PRINTS BEARING EARLIER REVISION DATES → REVISION DATES (PRELIMINARY STAGE ONLY) 11/30/07 3/15/08 10/31/08

SHEET 153R1 OF 214

ORIGINAL SCALE IN MILLIMETERS FOR REDUCED PLANS 0 10 20 30 40 50 60 70 80 90 100

DESIGN DETAIL SHEET (METRIC) (REV. 3/1/98)
⊕DATE⊕ ⊕TIME⊕ Pen Table File

FILE => p:\bb\04-012001\etl\skid beams_10_31_08\alsbmd07.dgn

DATE PLOTTED => 10/31/2008 TIME PLOTTED => 1:46:49 PM
USERNAME => ALee
FILE => p:\bb\04-012001\etl\skid beams_10_31_08\alsbmd07.dgn

MARK	DATE	DESCRIPTIONS	BY	CH'D	CCO#
1	07/15/08	REVISE W610 TO BEAM CONNECTIONS	RN	MS	
		REVISIONS			

CONTRACT CHANGE ORDER NO. 116-S1
SHEET 13 OF 17

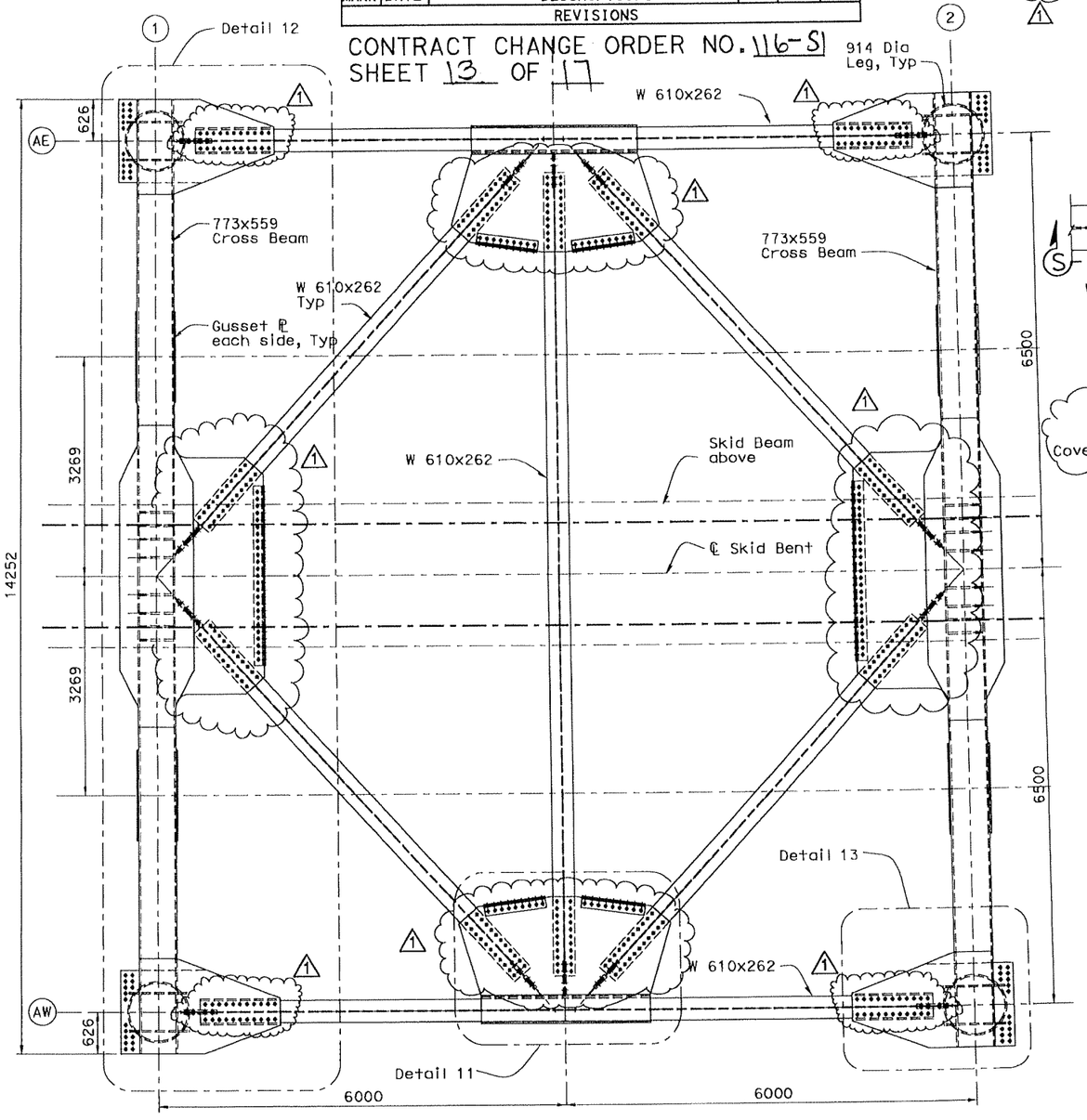

FOUR LEGGED TOWER TOP FRAMING PLAN
1:40

Skid Bent A Tower between Grids (1) & (2) shown.
All other four legged towers similar.

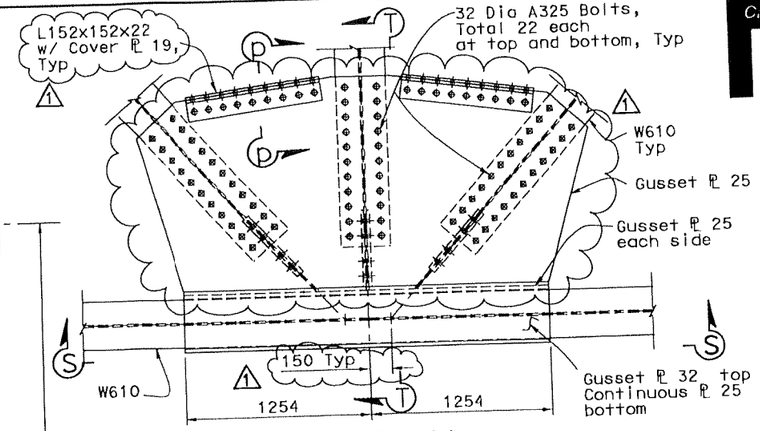

DETAIL 11
1:20

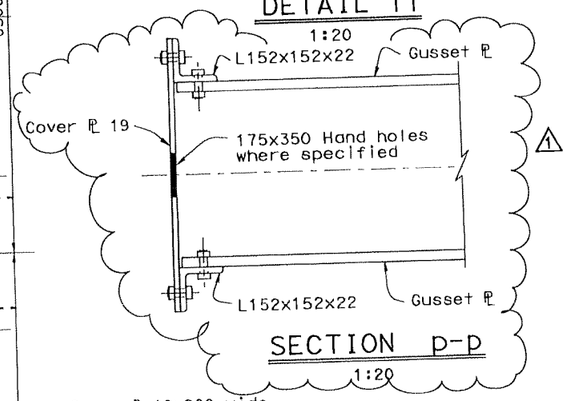

SECTION p-p
1:20

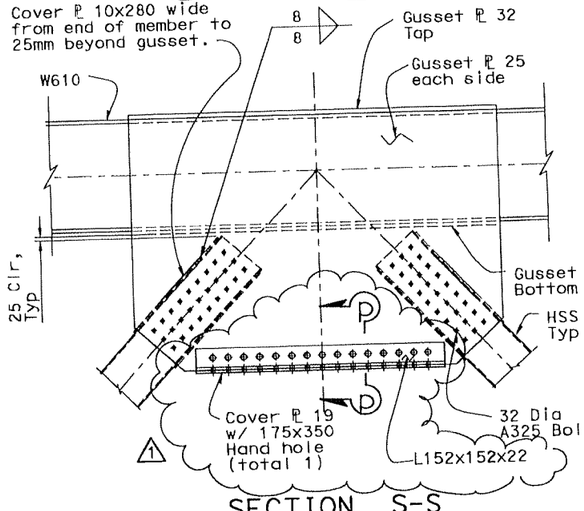

SECTION S-S
1:20

ALL DIMENSIONS ARE IN MILLIMETERS UNLESS OTHERWISE SHOWN

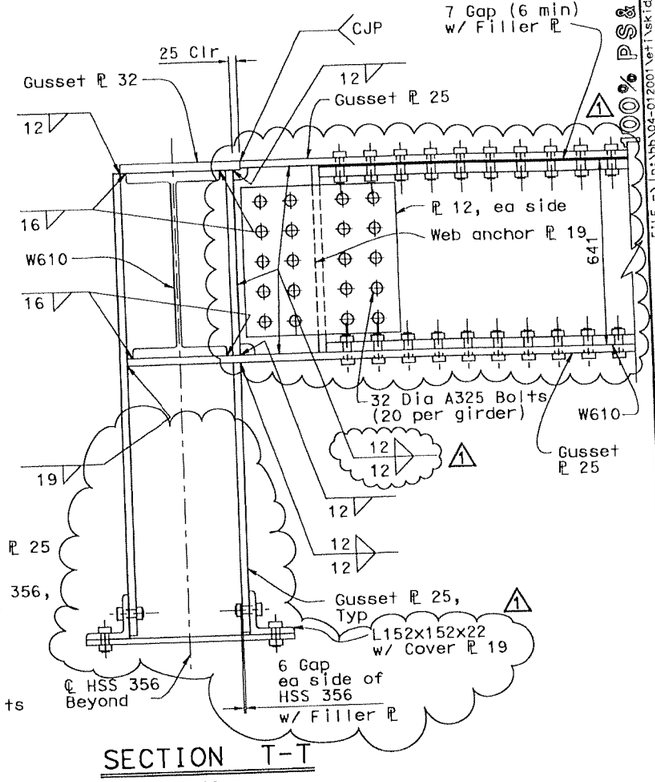

SECTION T-T
1:10

Notes:

1. The Contractor shall verify all controlling field dimensions before ordering or fabricating any material.
2. All bolts shall be 32 Dia A325, unless noted otherwise. For hole size, minimum spacing, edge distance and end distance, see "General Notes No. 2" sheet.
3. For detail 12, see "Skid Bent Details No. 5" sheet.
4. For Detail 13, see "Skid Bent Details No. 6" sheet.

DIST	COUNTY	ROUTE	KILOMETER POST TOTAL PROJECT	SHEET No	TOTAL
04	SF	80	12.6/13.2		

REGISTERED CIVIL ENGINEER

3-15-08
PLANS APPROVAL DATE

Richard V. Nutt, No. C 20665, Exp. 9/30/09, CIVIL, REGISTERED PROFESSIONAL ENGINEER, STATE OF CALIFORNIA

The State of California or its officers or agents shall not be responsible for the accuracy or completeness of electronic copies of this plan sheet.

T.Y. LIN / MOFFATT & NICHOL
Two Harrison Street, Suite 500
San Francisco, CA 94105

100% PS&E

DATE PLOTTED => 7/17/2008
TIME PLOTTED => 9:01:21 AM
USERNAME => Alee
FILE => p:\bb\04-012001\etl\skid_bents_07_15_08\alsbd04.dgn

DESIGN	BY R. Nutt, S. Singh	CHECKED S. Cheng, H. Najm	
DETAILS	BY A. Sudhausen	CHECKED A. Lee	
QUANTITIES	BY H. Nelson	CHECKED A. Lee	

T. Ostrom/M. Whiteside/A. Akinsanya
DESIGN OVERSIGHT

SIGN OFF DATE

DESIGN DETAIL SHEET (METRIC) (REV. 3/1/98)
◆DATE◆ ◆TIME◆ Pen Table File

PREPARED FOR THE STATE OF CALIFORNIA
DEPARTMENT OF TRANSPORTATION

ORIGINAL SCALE IN MILLIMETERS FOR REDUCED PLANS 0 10 20 30 40 50 60 70 80 90 100

W. Sah
PROJECT ENGINEER
S. Abbas
PROJECT MANAGER

CU
EA 0120R4

FILE => p:\bb\04-012001\etl\skid_bents_07_15_08\alsbd04.dgn

BRIDGE NO. 34-0006 (TEMP)
KILOMETER POST 12.6

DISREGARD PRINTS BEARING EARLIER REVISION DATES →

REVISION DATES (PRELIMINARY STAGE ONLY): 11/20/07, 3/14/08, 7/15/08

SAN FRANCISCO OAKLAND BAY BRIDGE
EAST SPAN SEISMIC SAFETY PROJECT

EAST TIE-IN

SKID BENT DETAILS NO. 4

SHEET 139 OF 214

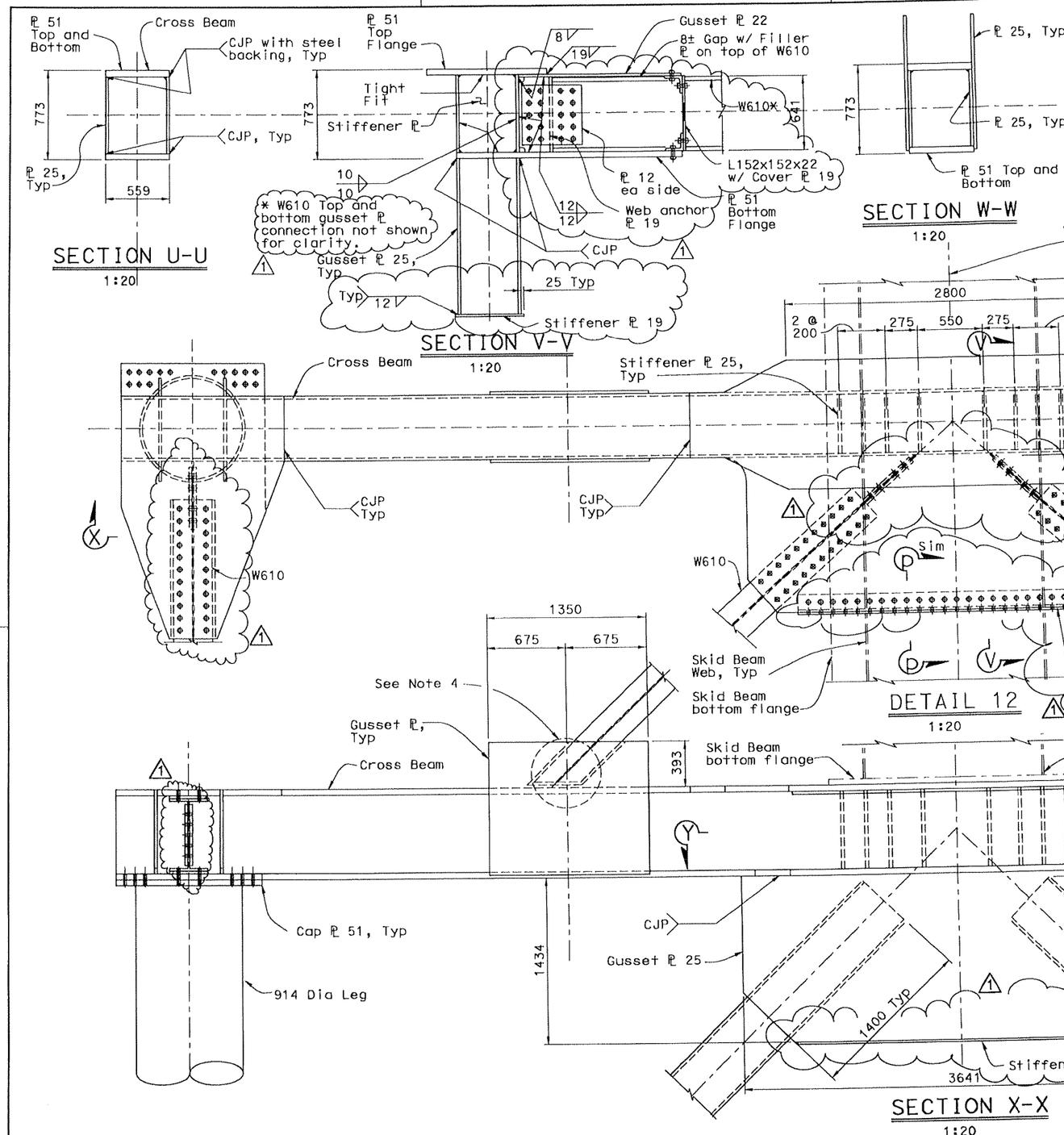

Notes:

1. The Contractor shall verify all controlling field dimensions before ordering or fabricating any material.
2. All bolts shall be 32 Dia A325, unless noted otherwise. For hole size, minimum spacing, edge distance and end distance, see "General Notes No. 2" sheet.
3. For Section Y-Y, see "Skid Bent Details No. 6" sheet.
4. For weld and filler plate requirements, see "Skid Beam Details No. 5" sheet.
5. For section p-p, see "Skid Bent Details No. 4" sheet.

Caltrans Metric

DIST	COUNTY	ROUTE	KILOMETER POST TOTAL PROJECT	SHEET No	TOTAL
04	SF	80	12.6/13.2		

REGISTERED CIVIL ENGINEER

3-15-08
PLANS APPROVAL DATE

REGISTERED PROFESSIONAL ENGINEER Richard V. Nutt No. C 20665 Exp. 9/30/09 CIVIL STATE OF CALIFORNIA

The State of California or its officers or agents shall not be responsible for the accuracy or completeness of electronic copies of this plan sheet.

T.Y. LIN / MOFFATT & NICHOL
Two Harrison Street, Suite 500
San Francisco, CA 94105

MARK	DATE	DESCRIPTIONS	BY	CH'D	CCO#
1	07/15/08	REVISE W610 TO CROSS BEAM CONNECTION	RN	MS	

REVISIONS

CONTRACT CHANGE ORDER NO. 116-S1
SHEET 14 OF 17

100% PS&E

ALL DIMENSIONS ARE IN MILLIMETERS UNLESS OTHERWISE SHOWN

SAN FRANCISCO OAKLAND BAY BRIDGE
EAST SPAN SEISMIC SAFETY PROJECT

EAST TIE-IN

SKID BENT DETAILS NO. 5

T. Ostrom/M. Whiteside/A. Akinsanya
DESIGN OVERSIGHT

SIGN OFF DATE

DESIGN DETAIL SHEET (METRIC) (REV. 3/1/98)
●DATE● ●TIME● Pen Table File

	BY	CHECKED
DESIGN	R. Nutt, S. Singh	S. Cheng, H. Najm
DETAILS	A. Sudhausen	A. Lee
QUANTITIES	H. Nelson	A. Lee

PREPARED FOR THE STATE OF CALIFORNIA DEPARTMENT OF TRANSPORTATION

ORIGINAL SCALE IN MILLIMETERS FOR REDUCED PLANS 0 10 20 30 40 50 60 70 80 90 100

M. Sah
PROJECT ENGINEER
S. Abbas
PROJECT MANAGER

CU
EA 0120R4

BRIDGE NO. 34-0006 (TEMP)
KILOMETER POST 12.6

DISREGARD PRINTS BEARING EARLIER REVISION DATES

REVISION DATES (PRELIMINARY STAGE ONLY) 11/05/07 3/16/08 7/15/08

SHEET 140 OF 214

FILE => p:\bb\04-012001\etl\skid_bents_07_15_08\alsbd05.dgn

USERNAME => ALee DATE PLOTTED => 7/17/2008 TIME PLOTTED => 9:01:26 AM

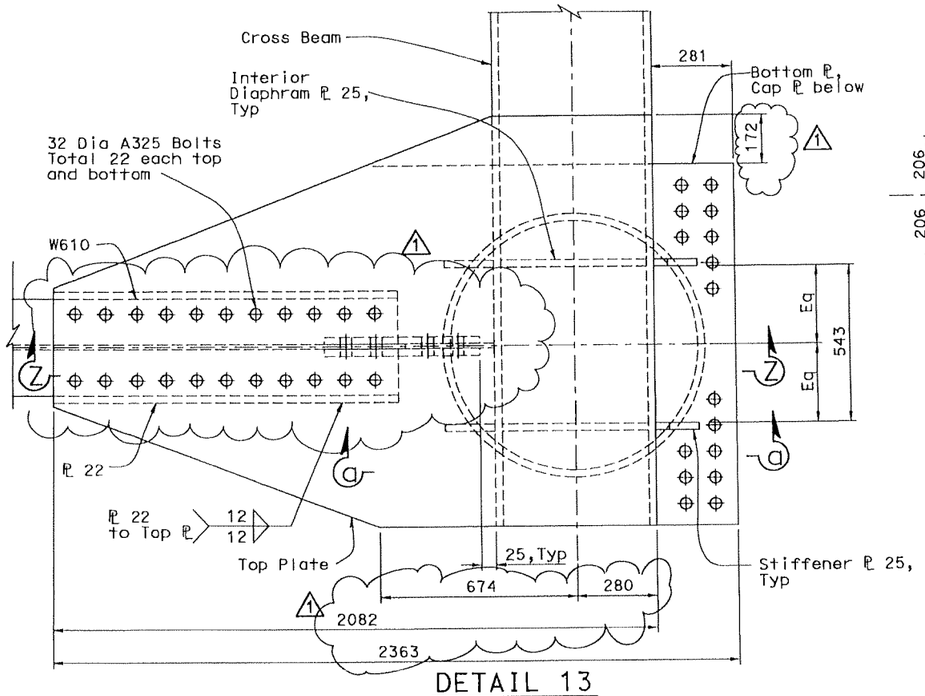

DETAIL 13

1:10

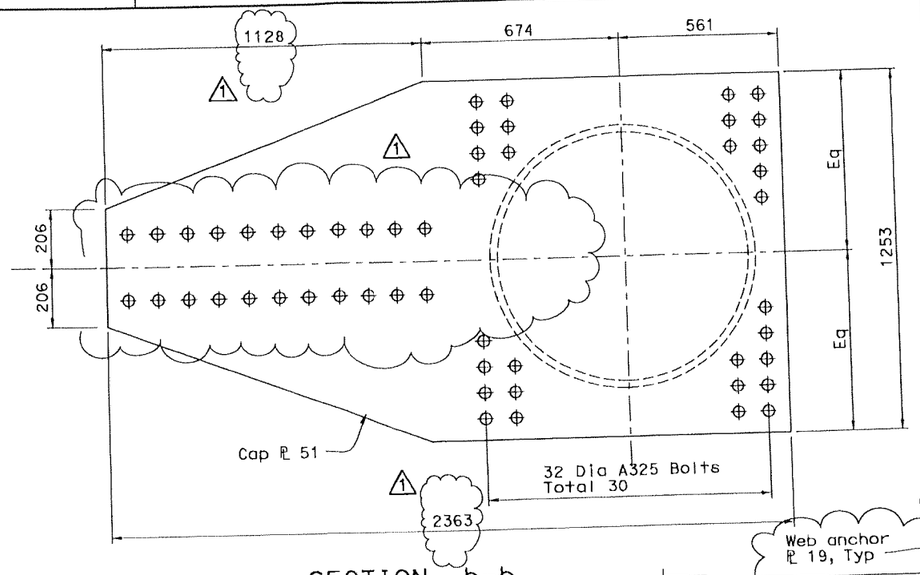

SECTION b-b

1:10

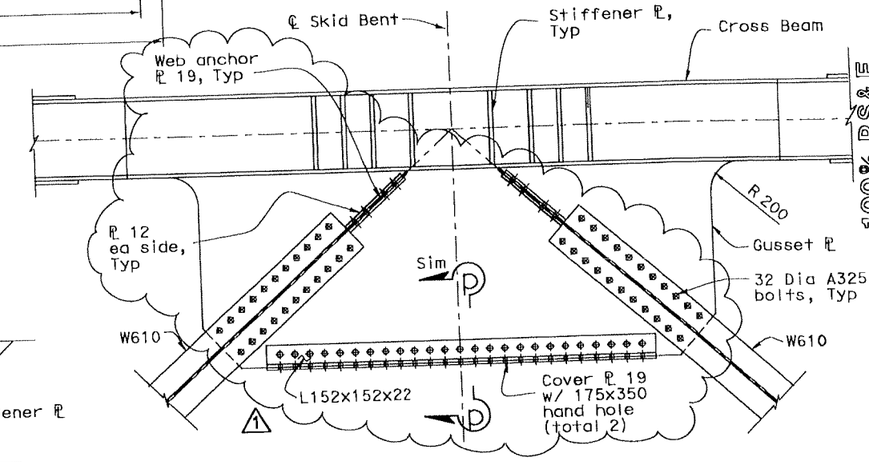

SECTION Y-Y

1:20

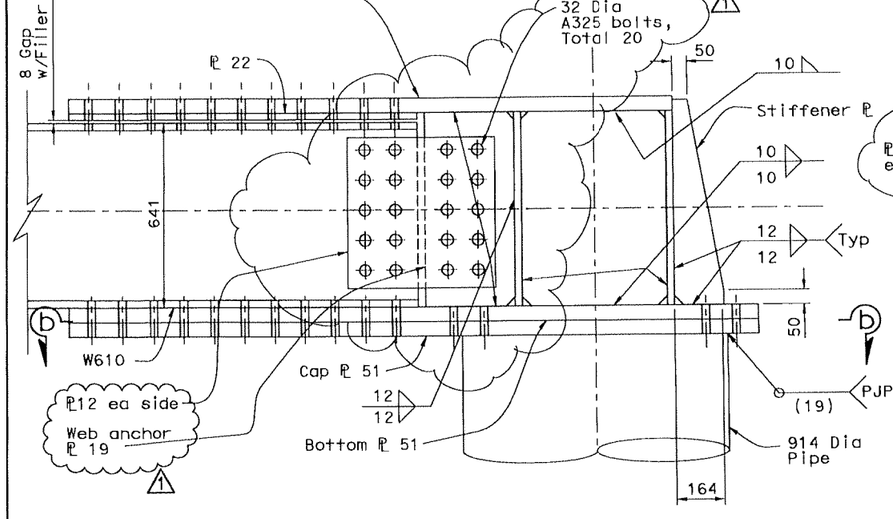

SECTION Z-Z

1:10

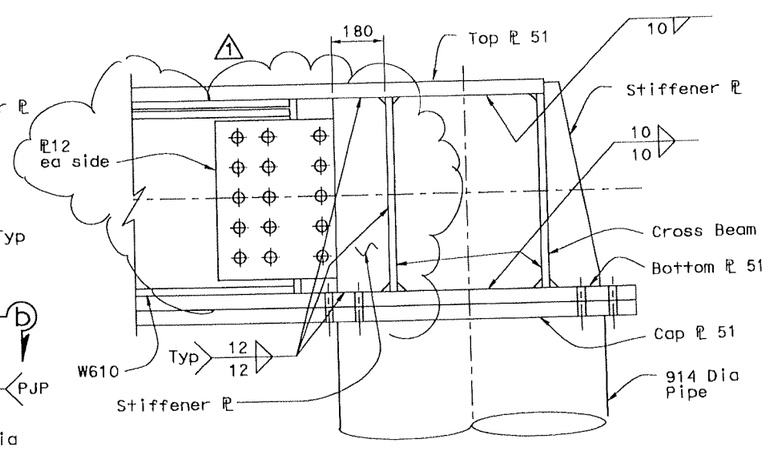

SECTION a-a

1:10

MARK	DATE	DESCRIPTIONS	BY	CH'D	CCO#
1	07/15/08	REVISE W610 TO CROSS BEAM CONNECTION	RN	MS	
		REVISIONS			

CONTRACT CHANGE ORDER NO. 116-S1
SHEET 15 OF 17

Notes:

1. The Contractor shall verify all controlling field dimensions before ordering or fabricating any material.
2. All bolts shall be 32 Dia A325, unless noted otherwise. For hole size, minimum spacing, edge distance and end distance, see "General Notes No. 2" sheet.
3. For section p-p, see "Skid Bent Details No. 4" sheet.

DIST	COUNTY	ROUTE	KILOMETER POST TOTAL PROJECT	SHEET No	TOTAL
04	SF	80	12.6/13.2		

Caltrans Metric

REGISTERED CIVIL ENGINEER

3-15-08
PLANS APPROVAL DATE

REGISTERED PROFESSIONAL ENGINEER — Richard V. Nutt — No. C 20665 — Exp. 9/30/09 — CIVIL — STATE OF CALIFORNIA

The State of California or its officers or agents shall not be responsible for the accuracy or completeness of electronic copies of this plan sheet.

T.Y. LIN / MOFFATT & NICHOL
Two Harrison Street, Suite 500
San Franalsco, CA 94105

100% PS&E

FILE => p:\bb\04-012001\etl\skld_bents_07_15_08\alsbd06.dgn
TIME PLOTTED => 9:01:31 AM
DATE PLOTTED => 7/17/2008
USERNAME => ALee

ALL DIMENSIONS ARE IN MILLIMETERS UNLESS OTHERWISE SHOWN

SAN FRANCISCO OAKLAND BAY BRIDGE
EAST SPAN SEISMIC SAFETY PROJECT

EAST TIE-IN

SKID BENT DETAILS NO. 6

T. Ostrom/M. Whiteside/A. Akinsanya
DESIGN OVERSIGHT

SION OFF DATE

	BY	CHECKED
DESIGN	R. Nutt, S. Singh	S. Cheng, H. Najm
DETAILS	A. Sudhausen	A. Lee
QUANTITIES	H. Nelson	A. Lee

PREPARED FOR THE STATE OF CALIFORNIA
DEPARTMENT OF TRANSPORTATION

M. Soh
PROJECT ENGINEER
S. Abbas
PROJECT MANAGER

BRIDGE NO. 34-0006 (TEMP)
KILOMETER POST 12.6

CU 0120R4
EA

DISREGARD PRINTS BEARING EARLIER REVISION DATES

REVISION DATES (PRELIMINARY STAGE ONLY): 11/09/07 3/18/08 7/15/08

SHEET 141 OF 214

ORIGINAL SCALE IN MILLIMETERS FOR REDUCED PLANS 0 10 20 30 40 50 60 70 80 90 100

DESIGN DETAIL SHEET (METRIC) (REV. 3/1/08)
◆DATE◆ ◆TIME◆ Pen Table File

FILE => p:\bb\04-012001\etl\skld_bents_07_15_08\alsbd06.dgn

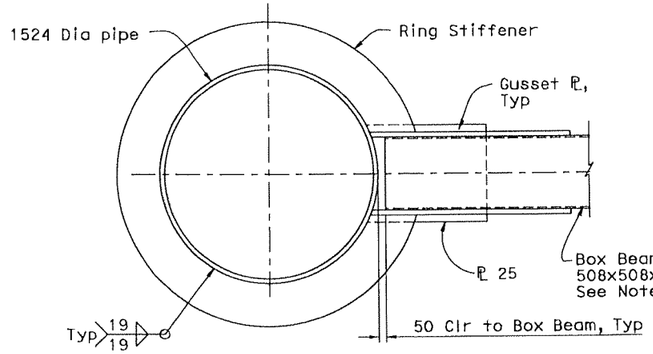

Notes:

1. The Contractor shall verify all controlling field dimensions before ordering or fabricating any material.
2. All bolts shall be 32 Dia A325, unless noted otherwise. For hole size, minimum spacing, edge distance and end distance, see "General Notes No. 2" sheet.
3. For anchor details, see "Skid Bent Footing Details No. 2" sheet.
4. Built-up Box Beam plate elements to be joined by continuous CJP welds with steel backing.
5. All welded spacer plates on HSS 305 members to be 356mm wide and extend from end of member to 25mm beyond gusset.

MARK	DATE	DESCRIPTIONS	BY	CH'D	CCO#
1	07/03/08	REVISE GUSSET ℄ SIZE & WELD	MS	HN	
		REVISIONS			

CONTRACT CHANGE ORDER NO. 116-S1
SHEET 16 OF 17

Caltrans Metric

DIST	COUNTY	ROUTE	KILOMETER POST TOTAL PROJECT	SHEET No	TOTAL
04	SF	80	12.6/13.2		

REGISTERED CIVIL ENGINEER

3-15-08
PLANS APPROVAL DATE

REGISTERED PROFESSIONAL ENGINEER — Richard V. Nutt — No. C 20665 — Exp. 9/30/09 — CIVIL — STATE OF CALIFORNIA

The State of California or its officers or agents shall not be responsible for the accuracy or completeness of electronic copies of this plan sheet.

T.Y. LIN / MOFFATT & NICHOL
Two Harrison Street, Suite 500
San Franalsoo, CA 94105

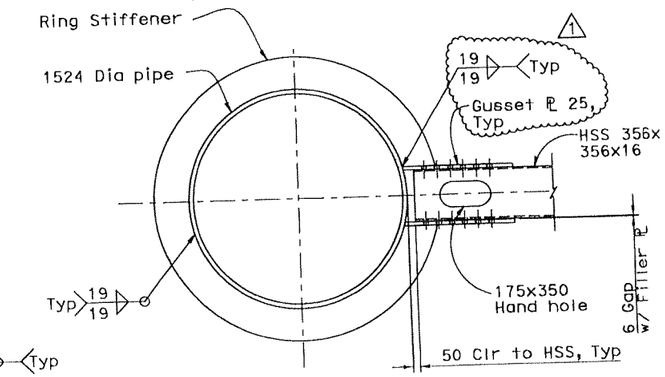

SECTION h-h
1:20

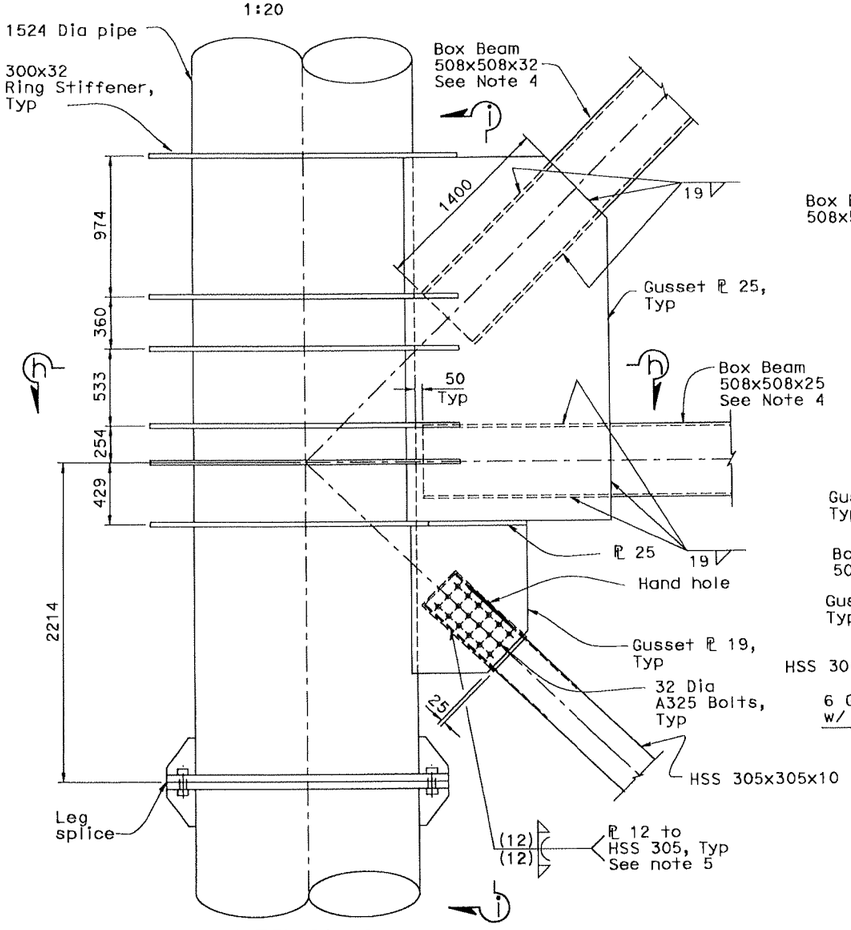

DETAIL 6
1:20

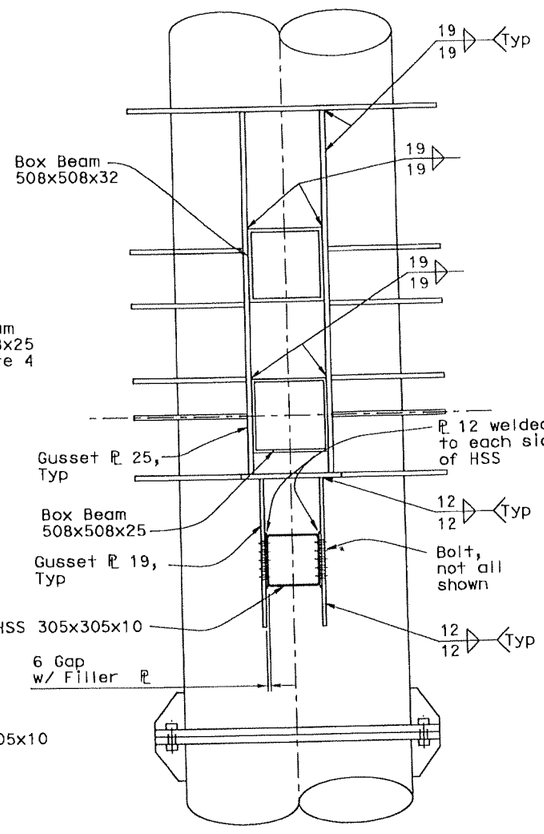

SECTION i-i
1:20

SECTION j-j
1:20

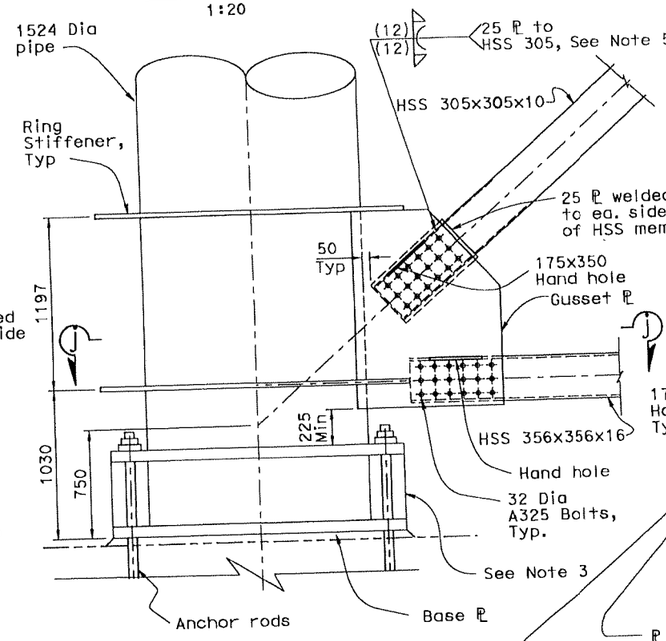

DETAIL 9
1:20

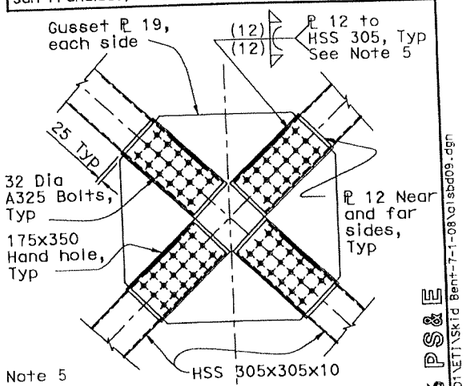

DETAIL 8
1:20

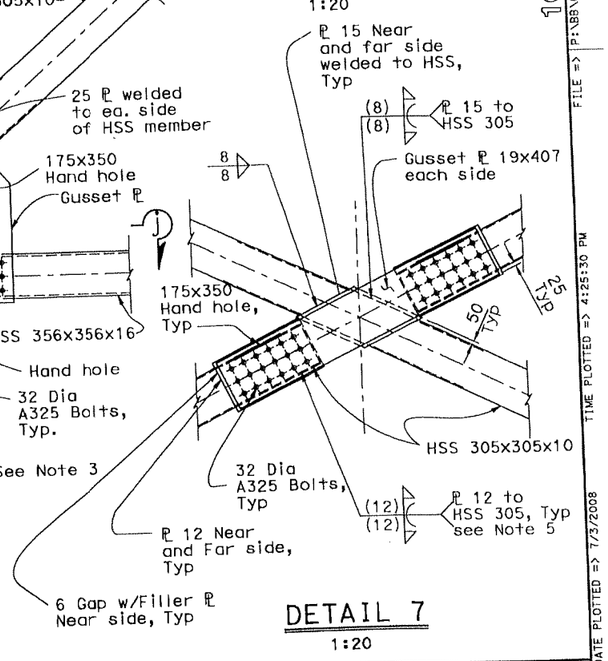

DETAIL 7
1:20

100% PS&E

FILE => P:\BB\04-012001\ET\Skid Bent-7-1-08\alsbd09.dgn
TIME PLOTTED => 4:25:30 PM
DATE PLOTTED => 7/3/2008
USERNAME => AGee

ALL DIMENSIONS ARE IN MILLIMETERS UNLESS OTHERWISE SHOWN

SAN FRANCISCO OAKLAND BAY BRIDGE
EAST SPAN SEISMIC SAFETY PROJECT

EAST TIE-IN

SKID BENT DETAILS NO. 9

	BY	CHECKED
DESIGN	C. Redfield, R. Nutt	S. Cheng
DETAILS	S. Lee, P. Zhao	A. Lee
QUANTITIES	H. Nelson	A. Lee

PREPARED FOR THE STATE OF CALIFORNIA
DEPARTMENT OF TRANSPORTATION

T. Ostrom/M. Whiteside/A. Akinsanya
DESIGN OVERSIGHT

SIGN OFF DATE

N. Sah
PROJECT ENGINEER
S. Abbas
PROJECT MANAGER

CU
EA 0120R4

BRIDGE NO. 34-0006 (TEMP)
KILOMETER POST 12.6

DISREGARD PRINTS BEARING EARLIER REVISION DATES → 11/09/07 3/18/08 7/02/08

SHEET 144 OF 214

ORIGINAL SCALE IN MILLIMETERS FOR REDUCED PLANS 0 10 20 30 40 50 60 70 80 90 100

DESIGN DETAIL SHEET (METRIC) (REV. 3/1/98)
◆DATE◆ ◆TIME◆ Pen Table File

FILE => P:\BB\04-012001\ET\Skid Bent-7-1-08\alsbd09.dgn

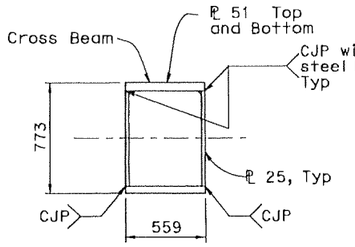

SECTION 1-1

1: 20

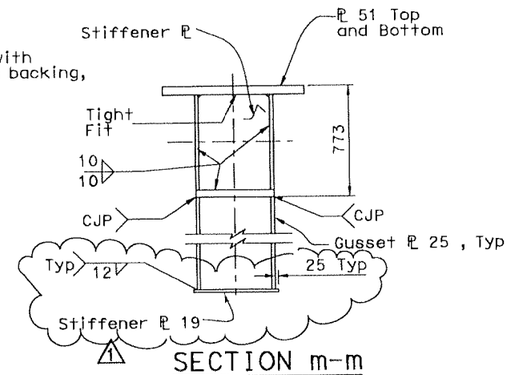

SECTION m-m

1: 20

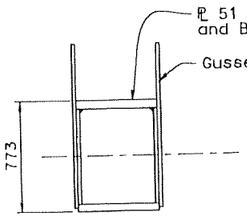

SECTION n-n

1: 20

Notes:

1. The Contractor shall verify all controlling field dimensions before ordering or fabricating any material.
2. All bolts shall be 32 Dia A325, unless noted otherwise. For hole size, minimum spacing, edge distance and end distance, see "General Notes No. 2" sheet.
3. For weld and filler plate requirement, see "Skid Beam Details No. 5" sheet.

Caltrans Metric

DIST	COUNTY	ROUTE	KILOMETER POST TOTAL PROJECT	SHEET No	TOTAL
04	SF	80	12.6/13.2		

REGISTERED CIVIL ENGINEER

3-15-08

PLANS APPROVAL DATE

REGISTERED PROFESSIONAL ENGINEER — Richard V. Nutt — No. C 20665 — Exp. 9/30/09 — CIVIL — STATE OF CALIFORNIA

The State of California or its officers or agents shall not be responsible for the accuracy or completeness of electronic copies of this plan sheet.

T.Y. LIN / MOFFATT & NICHOL
Two Harrison Street, Suite 500
San Francisco, CA 94105

MARK	DATE	REVISIONS	BY	CH'D	CCO#
1	07/15/08	ADD STIFFENER PLATE	RN	MS	

CONTRACT CHANGE ORDER NO. 116-S1
SHEET 17 OF 17

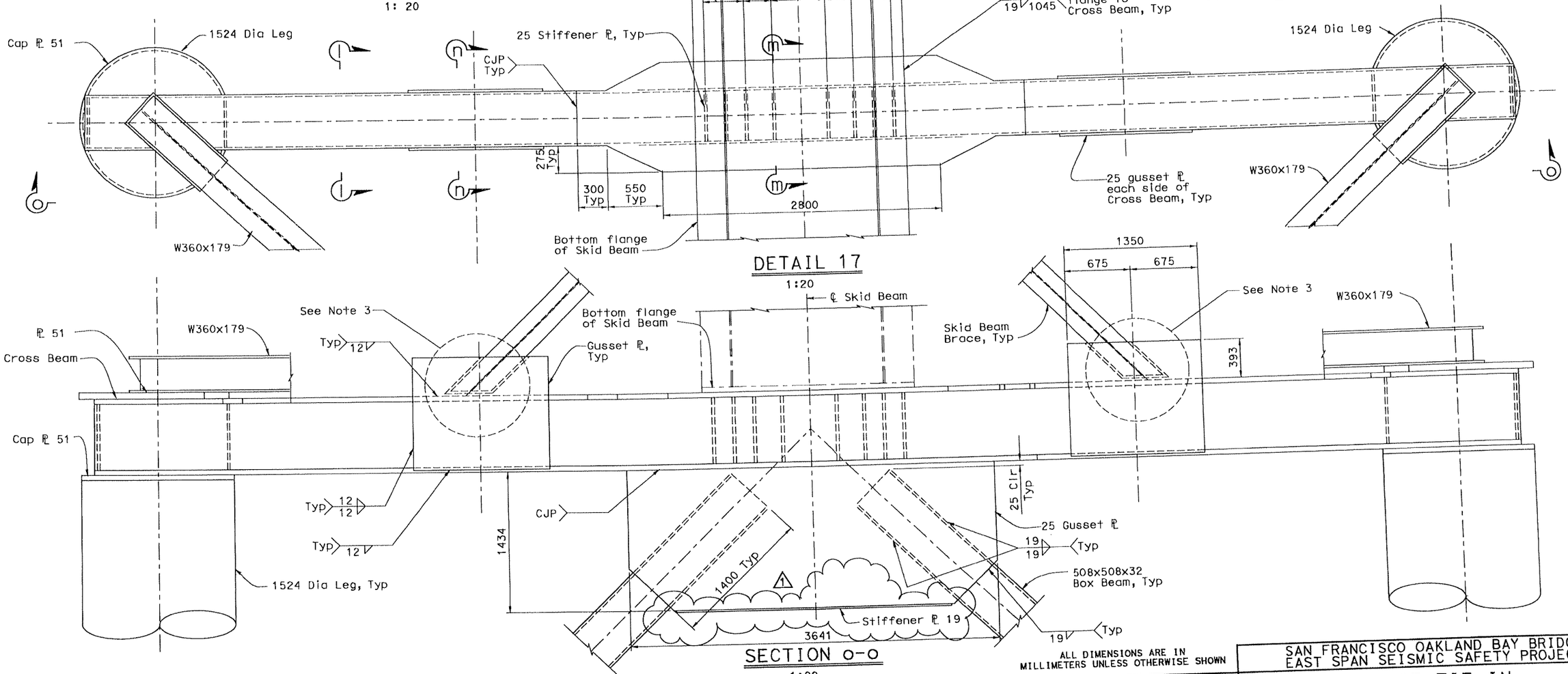

DETAIL 17

1:20

SECTION o-o

1:20

ALL DIMENSIONS ARE IN MILLIMETERS UNLESS OTHERWISE SHOWN

SAN FRANCISCO OAKLAND BAY BRIDGE
EAST SPAN SEISMIC SAFETY PROJECT

EAST TIE-IN

SKID BENT DETAILS NO. 11

T. Ostrom/M. Whiteside/A. Akinsanya
DESIGN OVERSIGHT

SION OFF DATE

	BY	CHECKED
DESIGN	R. Nutt, S. Singh	S. Cheng, H. Najm
DETAILS	A. Sudhausen	A. Lee
QUANTITIES	H. Nelson	A. Lee

PREPARED FOR THE STATE OF CALIFORNIA DEPARTMENT OF TRANSPORTATION

N. Sah — PROJECT ENGINEER
S. Abbas — PROJECT MANAGER

CU
EA 0120R4

BRIDGE NO. 34-0006 (TEMP)
KILOMETER POST 12.6

DISREGARD PRINTS BEARING EARLIER REVISION DATES →

REVISION DATES (PRELIMINARY STAGE ONLY): 11/09/07 | 3/18/08 | 7/15/08

SHEET 146 OF 214

DESIGN DETAIL SHEET (METRIC) (REV. 3/1/98)
◆DATE◆ ◆TIME◆ Pen Table File

ORIGINAL SCALE IN MILLIMETERS FOR REDUCED PLANS 0 10 20 30 40 50 60 70 80 90 100

FILE => p:\bb\04-012001\etl\skld_bents_07_15_08\aisbd11.dgn

100% PS&E

USERNAME => ALee
DATE PLOTTED => 7/17/2008
TIME PLOTTED => 9:01:34 AM
FILE => p:\bb\04-012001\etl\skld_bents_07_15_08\aisbd11.dgn

STATE OF CALIFORNIA - DEPARTMENT OF TRANSPORTATION

CONTRACT CHANGE ORDER

Change Requested by: Engineer

CCO 116	Suppl. No. 2	Contract No. 04 - 0120R4	Road SF-80-12.6/13.2	FED. AID LOC.: ACBRIM-080-1(097)N

To: **CC MYERS INC**

You are directed to make the following changes from the plans and specifications or do the following described work not included in the plans and specifications for this contract. ***NOTE: This change order is not effective until approved by the Engineer.***

Description of work to be done, estimate of quantities and prices to be paid. (Segregate between additional work at contract price, agreed price and force account.) Unless otherwise stated, rates for rental of equipment cover only such time as equipment is actually used and no allowance will be made for idle time. This last percentage shown is the net accumulated increase or decrease from the original quantity in the Engineer's Estimate.

Extra Work at Force Account:

Provide additional funds.

Estimated Cost of Extra Work at Force Account $300,000.00

RECEIVED
01033 SEP 23 09

Estimated Cost: **Increase** ☑ **Decrease** ☐ **$300,000.00**

By reason of this order the time of completion will be adjusted as follows: Deferred

Submitted by

Signature	Resident Engineer	Date
	BILL CASEY	7-2-09

Approval Recommended by

Signature	SFOBB Construction Manager	Date
Mike Forner	MIKE FORNER	7-6-09

Engineer Approval by

Signature	SFOBB Construction Manager	Date
Mike Forner	MIKE FORNER	7-15-09

We the undersigned contractor, have given careful consideration to the change proposed and agree, if this proposal is approved, that we will provide all equipment, furnish the materials, except as may otherwise be noted above, and perform all services necessary for the work above specified, and will accept as full payment therefor the prices shown above.

NOTE: If you, the contractor, do not sign acceptance of this order, your attention is directed to the requirements of the specifications as to proceeding with the ordered work and filing a written protest within the time therein specified.

Contractor Acceptance by

Signature	(Print name and title)	Date
N/A	N/A	N/A

STATE OF CALIFORNIA - DEPARTMENT OF TRANSPORTATION

CONTRACT CHANGE ORDER MEMORANDUM

DATE: 6/17/2009

TO: MIKE FORNER / DEANNA VILCHECK	FILE: E.A. 04 - 0120R4
FROM: BILL CASEY	CO-RTE-PM SF-80-12.6/13.2
	FED. NO. ACBRIM-080-1(097)N
CCO#: 116 SUPPLEMENT#: 2 Category Code: CHPA	CONTINGENCY BALANCE (incl. this change) $45,618,940.59
COST: $300,000.00 INCREASE ☑ DECREASE ☐	HEADQUARTERS APPROVAL REQUIRED? ☑ YES ☐ NO
SUPPLEMENTAL FUNDS PROVIDED: $0.00	IS THIS REQUEST IN ACCORDANCE WITH ENVIRONMENTAL DOCUMENTS? ☑ YES ☐ NO
CCO DESCRIPTION: Add Funds for ETI Skid Bent & Beam	PROJECT DESCRIPTION: CONSTRUCT ROUTE 80 TEMP BYPASS STRUCTURE

Original Contract Time:	Time Adj. This Change:	Previously Approved CCO Time Adjustments:	Percentage Time Adjusted: (including this change)	Total # of Unreconciled Deferred Time CCO(s): (including this change)
475 Day(s)	DEF Day(s)	1195 Day(s)	252 %	8

THIS CHANGE ORDER PROVIDES FOR:

additional funds for the transportation of the skid bent and beam from the fabrication site to the project site.

This contract calls for the construction of a temporary detour for both eastbound and westbound I-80 traffic that allows for the tie in of the east span of the new San Francisco Oakland Bay Bridge (SFOBB) to Yerba Buena Island. The detour consist of three main structures, the east tie in (ETI) to the bridge, the west tie in (WTI) to the island and the viaduct structure between the two tie ins.

The original contract was awarded as a performance-based contract with the Contractor responsible for the design of the structures based upon meeting specified design criteria. The Department issued a December 14, 2006 memo entitled Strategy for South-South Detour Contract Completion which was approved by Tony Anziano (Toll Bridge Program Manager), Richard Land (Chief Engineer) and subsequently by the TBPOC. This memo recommended that the design of the ETI structure be assumed by the Department as opposed to the as-bid performance based contractor design.

The original contract change order, along with Supplement No. 1 provided force account funding for the transportation of the fabricated skid bent and beam to the project site at an estimated cost of $2,500,000.00.

It is now anticipated that additional funding of $300,000.00 shall be required to complete the transportation of all the skid bent and beam members from the fabrication site to the project site. The cost for the 4 barge shipments of the upper cross beams and skid beams has exceeded the estimated cost for this work.

The work shall be performed as extra work at force account at an estimated cost of $300,000.00 and shall be financed from the contract's contingency funds. A cost analysis is on file.

The contractor's acceptance of this supplemental change order is not required as it provides additional funds only for the previously defined scope of work. Therefore this change order is being issued unilaterally.

Adjustment of contract time is deferred pending completion of the work specified in this change as it may become the controlling operation in accordance with Section 8-1.07 "Liquidated Damages", of the Standard Specifications and Section 10-1.20 "Time Related Overhead (TRO)" of the Special Provisions.

Compensation for delays resulting from this work will be made in accordance with Section 8-1.09 "Right of Way Delays" of the Standard Specifications and Section 10-1.20 "Time Related Overhead" of the Special Provisions.

Maintenance concurrence is not required as this change order only acts to procure materials. Concurrence for the construction of the ETI structures shall be obtained under the change order that provides for the construction of that structure.

FHWA concurrence is not required as they are no longer providing funds for this project.

This change has been concurred with by Alec Melkonians - Asst. Project Manager and Hong Wong - Project Engineer. TBPOC Approval provided on July 15, 2009.

ADA Notice: For individuals with sensory disabilities, this document is available in alternate formats. For information call: (916) 654-6410 or TDD (916) 654-3880 or write Records and Forms Management, 1120 N Street, MS-89, Sacramento, CA 95814.

CONCURRED BY:		
Construction Engineer:	Bill Casey, Resident Engineer	Date 7-2-09
Bridge Engineer:		Date
Project Engineer:	Hong Wong, PE	Date 7-15-09
Project Manager:	Alec Melkonians	Date 7-15-09
FHWA Rep.:		Date
Environmental:		Date
Other (specify):		Date
Other (specify):		Date
District Prior Approval By:		Date
HQ (Issue .Approve) By:	Bob Molera, HQ CCO Engineer	Date 7-7-09
Resident Engineer's Signature:		Date

7-2-09

ESTIMATE OF COST

	THIS REQUEST	TOTAL TO DATE
ITEMS	$0.00	$0.00
FORCE ACCOUNT	$300,000.00	$2,800,000.00
AGREED PRICE	$0.00	$12,966,180.00
ADJUSTMENT	$0.00	$596,750.00
TOTAL	$300,000.00	$16,362,930.00

FEDERAL PARTICIPATION

☐ PARTICIPATING ☐ PARTICIPATING IN PART ☑ NONE
☐ NON-PARTICIPATING (MAINTENANCE) ☐ NON-PARTICIPATING

FEDERAL SEGREGATION (if more than one Funding Source or P.I.P. type)
☐ CCO FUNDED PER CONTRACT ☐ CCO FUNDED AS FOLLOWS

FEDERAL FUNDING SOURCE	PERCENT

ADA Notice: For individuals with sensory disabilities, this document is available in alternate formats. For information call: (916) 654-6410 or TDD (916) 654-3880 or write Records and Forms Management, 1120 N Street, MS-89, Sacramento, CA 95814.

CONTRACT CHANGE ORDER

Change Requested by: Engineer

CCO: 117	Suppl. No. 0	Contract No. 04 - 0120R4	Road SF-80-12.6/13.2	FED. AID LOC.: ACBRIM-080-1(097)N

To: **CC MYERS INC**

You are directed to make the following changes from the plans and specifications or do the following described work not included in the plans and specifications for this contract. ***NOTE: This change order is not effective until approved by the Engineer.***

Description of work to be done, estimate of quantities and prices to be paid. (Segregate between additional work at contract price, agreed price and force account.) Unless otherwise stated, rates for rental of equipment cover only such time as equipment is actually used and no allowance will be made for idle time. This last percentage shown is the net accumulated increase or decrease from the original quantity in the Engineer's Estimate.

Extra Work at Force Account:

As authorized by the Engineer and as shown on Sheets 2 through 3 of this change order, construct temporary drainage systems at the southside (West Tie-In) of the existing San Francisco - Oakland Bay Bridge between Bents 39 and 48.

All work shall be performed in accordance with the contract documents.

Estimated cost of Extra Work at Force Account $150,000.00

Estimated Cost: Increase ☑ Decrease ☐ **$150,000.00**

By reason of this order the time of completion will be adjusted as follows: 0 days

Submitted by

Signature	Resident Engineer	Date
	BILL CASEY	10-11-08

Approval Recommended by

Signature	Area Construction Manager	Date
Deanna Vilcheck	DEANNA VILCHECK	10/30/08

Engineer Approval by

Signature	Area Construction Manager	Date
Deanna Vilcheck	DEANNA VILCHECK	12/16/08

We the undersigned contractor, have given careful consideration to the change proposed and agree, if this proposal is approved, that we will provide all equipment, furnish the materials, except as may otherwise be noted above, and perform all services necessary for the work above specified, and will accept as full payment therefor the prices shown above.

NOTE: If you, the contractor, do not sign acceptance of this order, your attention is directed to the requirements of the specifications as to proceeding with the ordered work and filing a written protest within the time therein specified.

Contractor Acceptance by

Signature	(Print name and title)	Date
D E Hamick	DANIEL E. HAMICK, PRESIDENT	12/01/08

CONTRACT NO. 04-0120R4

CONTRACT CHANGE ORDER NO 117

SHEET 2 OF 3

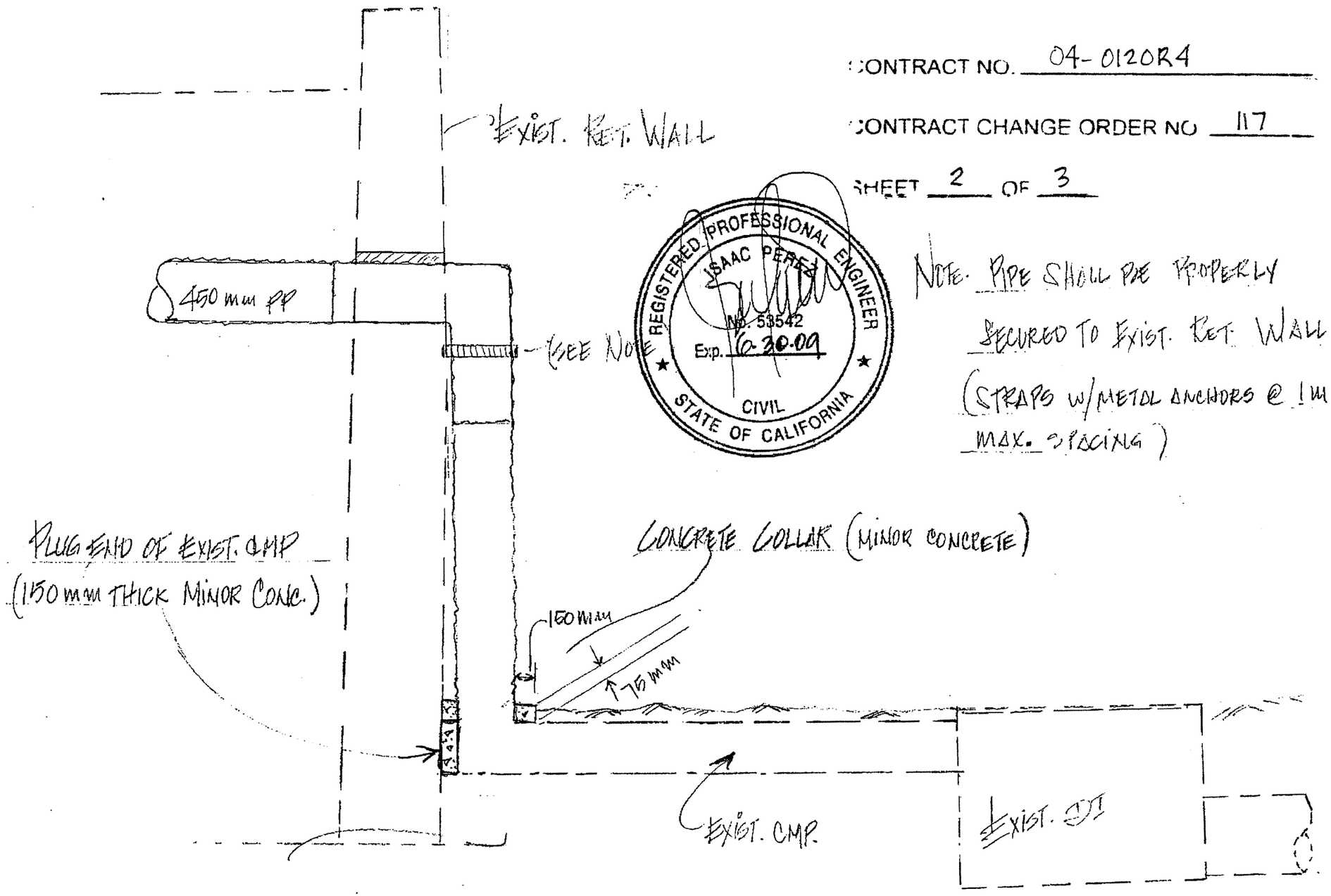

REGISTERED PROFESSIONAL ENGINEER
ISAAC PEREZ
No. 53542
Exp. 6-30-09
CIVIL
STATE OF CALIFORNIA

NOTE. PIPE SHALL BE PROPERLY SECURED TO EXIST. RET. WALL (STRAPS W/METAL ANCHORS @ 1M MAX. SPACING)

DETAIL "A"

(NTS)

04315
04-0120R3
8-21-08

REGISTERED CIVIL ENGINEER DATE

PLANS APPROVAL DATE

The State of California or its officers or agents shall not be responsible for the accuracy or completeness of electronic copies of this plan sheet.

REGISTERED PROFESSIONAL ENGINEER W. J. CULLEN No. C 40620 Exp. 03-31-07 CIVIL STATE OF CALIFORNIA

DRAINAGE SYSTEM INFORMATION

① G1 INLET, 11m RT "ED1" 50+19, FL 50.800; TG = 52.000
P1 = 450 mm x 4 m PP

② G1 INLET, 14m RT "ED1" 50+23, FL 50.600; TG = 51.400
P2 = 450 mm x 9 m PP

③ G1 INLET, 21m RT "ED1" 50+24, FL 50.500; TG = 51.300
P3 = 450 mm x 41 m PP

④ G1 INLET, 9m RT "ED1" 50+66; FL 50.400; TG = 51.000
P4 = 450 m x 36 m PP

⑤ G1 INLET, 9m RT "ED1" 51+15, FL 49.800; TG = 50.900
P5 = 450 mm x 23 m PP

⑥ G1 INLET, 13m LT "ED1" 51+22, FL 49.600; TG = 50.800
P6 = 450 mm x 14 m PP

⑦ FL 49.446 @ OPENING ON AN EXISTING RET. WALL.

⑧ G1 INLET, 9m RT "ED1" 51+02, FL = 49.894; TG 51.05
P7 = 450 mm x 11 m PP

⑨ = G1 INLET, 11m LT "ED1" 51+14, FL 50.400

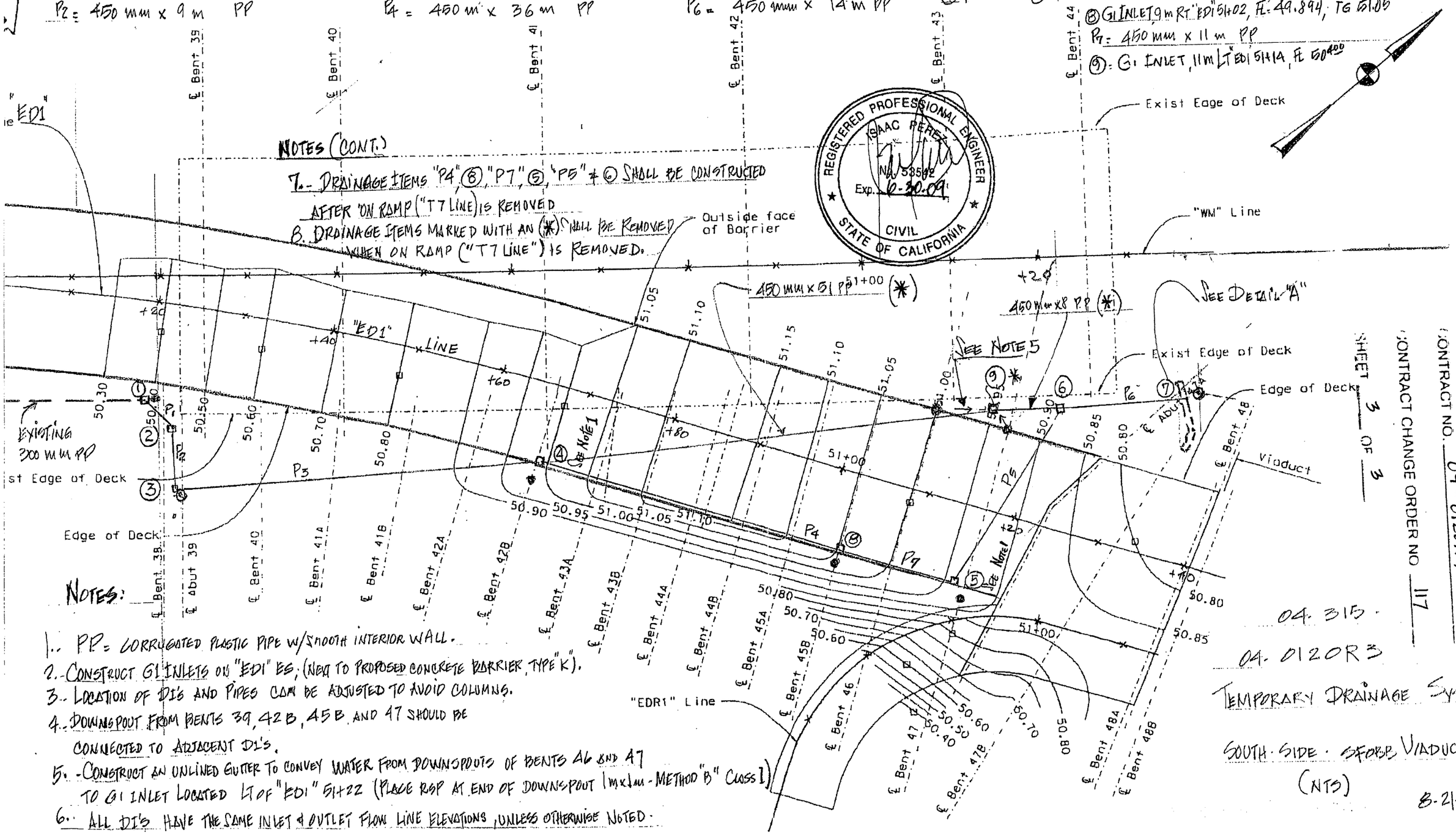

NOTES (CONT.)

7. DRAINAGE ITEMS "P4", ⑧, "P7", ⑤, "P5" & ⑥ SHALL BE CONSTRUCTED AFTER ON RAMP ("T7 LINE") IS REMOVED

8. DRAINAGE ITEMS MARKED WITH AN (*) SHALL BE REMOVED WHEN ON RAMP ("T7 LINE") IS REMOVED.

NOTES:

1. PP = CORRUGATED PLASTIC PIPE W/SMOOTH INTERIOR WALL.
2. CONSTRUCT G1 INLETS ON "ED1" ES; (NEXT TO PROPOSED CONCRETE BARRIER, TYPE "K").
3. LOCATION OF DI'S AND PIPES CAN BE ADJUSTED TO AVOID COLUMNS.
4. DOWNSPOUT FROM BENTS 39, 42B, 45B AND 47 SHOULD BE CONNECTED TO ADJACENT DI'S.
5. CONSTRUCT AN UNLINED GUTTER TO CONVEY WATER FROM DOWNSPOUTS OF BENTS 46 AND 47 TO G1 INLET LOCATED LT OF "ED1" 51+22 (PLACE RSP AT END OF DOWNSPOUT 1m x 1m - METHOD "B" CLASS I)
6. ALL DI'S HAVE THE SAME INLET & OUTLET FLOW LINE ELEVATIONS, UNLESS OTHERWISE NOTED.

REGISTERED PROFESSIONAL ENGINEER ISAAC PEREZ No. 53542 Exp. 6-30-09 CIVIL STATE OF CALIFORNIA

CONTRACT NO. 04-0120R4

CONTRACT CHANGE ORDER NO 117

SHEET 3 OF 3

04.315

04.0120R3

TEMPORARY DRAINAGE SYST.

SOUTH SIDE SFOBB VIADUCT

(NTS)

8-21-08

TIME PLOTTED => 16:24

DATED => 01-FEB-2008

CONTRACT CHANGE ORDER

Change Requested by: Engineer

CCO 118	Suppl. No. 0	Contract No. 04 - 0120R4	Road SF-80-12.6/13.2	FED. AID LOC.: ACBRIM-080-1(097)N

To: **CC MYERS INC**

You are directed to make the following changes from the plans and specifications or do the following described work not included in the plans and specifications for this contract. ***NOTE: This change order is not effective until approved by the Engineer.***

Description of work to be done, estimate of quantities and prices to be paid. (Segregate between additional work at contract price, agreed price and force account.) Unless otherwise stated, rates for rental of equipment cover only such time as equipment is actually used and no allowance will be made for idle time. This last percentage shown is the net accumulated increase or decrease from the original quantity in the Engineer's Estimate.

Extra Work at Force Account:

As authorized by the Engineer and as shown on Sheets 5 and 6 of this change order, provide geotechnical support work during the pile driving operation at Bent W5L. All work shall comply with the following requirements:

A minimum lateral setback at grade of 9.1 m (30 ft) shall be established from the visible face of the existing YB3 concrete pedestal prior to pile driving. No pile driving will be performed in the hatched area as shown on Sheet 6 of 6 of this change order.

SETTLEMENT MONITORING

Install a settlement monitoring system during pile driving operation. Settlement monuments shall be placed on at least two perpendicular faces of the existing structure (concrete pedestal). An elevation baseline shall be established prior to the start of pile driving. Pile driving shall cease if it exceeds a structural tolerable settlement limit of 13-mm (1/2 "). The settlement monitoring system shall be submitted to the Engineer for review and approval prior to its use.

VIBRATION MONITORING

This work shall consist of furnishing, installing and maintaining vibration-monitoring instrumentation; collecting vibration data; and interpreting and reporting the results of vibration monitoring as specified herein. This work shall include using the vibration monitoring data, to protect the following facility from excess vibration during construction activities:

Bridge No. 33-0025 East Bay Bridge, Footing at YB3

GENERAL

The Contractor shall be responsible for the following, including but not limited to:

A. Furnish and install vibration-monitoring instrumentation.
B. Protect from damage and maintain instruments installed by the Contractor and repair or replace damaged or inoperative instruments.
C. Collect, interpret and report data from instrumentation specified herein.

The State is not responsible for the safety of the work based on vibration-monitoring data, and compliance with this Sectio does not relieve the Contractor of full responsibility for damage caused by the Contractor's operations.

VIBRATION MONITORING PERSONNEL

The Contractor's vibration-monitoring personnel shall have the qualifications specified herein. These personnel may be on the staff of the Contractor. However, they shall not be employed nor compensated by subcontractors, or by persons or entities hired by subcontractors, who will provide other services or material for the project.

The Contractor's vibration-monitoring personnel shall include a qualified Vibration Instrumentation Engineer who is a registered Professional Engineer in the State of California, and who has at least 4 years of experience in the installation an use of vibration-monitoring instrumentation and in interpreting instrumentation data. The Vibration Instrumentation Engineer shall:

1. Be on site and supervise the initial installation of each vibration-monitoring instrument.
2. Supervise interpretations of vibration-monitoring data.

The Contractor's vibration-monitoring personnel shall be subject to the review of the Engineer.

SUBMITTALS

Prior to any significant impact work and prior to performing any vibration monitoring, the Contractor shall submit to the Engineer a written vibration monitoring plan, vibration monitoring equipment manufacturer's product data and the resumes of the Vibration Instrumentation Engineer and any vibration monitoring technical support personnel.

The vibration monitoring equipment manufacturer's data shall describe in detail all vibration-monitoring instruments. Requests for consideration of substitutions, if any, together with product data and instruction manuals for requested substitutions.

The resumes of the Vibration Instrumentation Engineer and any vibration monitoring technical support personnel shall be sufficient to define details of relevant experience.

The written vibration monitoring plan shall detail the procedures for vibration monitoring. Such details shall include, but not limited to:

1. The name of the Firm providing the vibration monitoring services.
2. Description of the instrumentation and equipment to be used.
3. Measurement locations and methods for mounting the vibration sensors.
4. Procedures for data collection and analysis.
5. Means and methods of providing warning when the particle velocity equals or exceeds specified limits.
6. Name of the "responsible person" designated by the Contractor. The responsible person designated by the Contractor shall have the authority to stop the work causing the vibration.

Within 5 days of receipt of each instrument at the site, the Contractor shall submit to the Engineer a copy of the instruction manual and the laboratory calibration and test equipment certification.

In addition, the Contractor shall submit data and reports as specified in "Data Reduction, Processing, Plotting and Reporting" in this change order.

The review period shall be the same as those set forth in Section 51-1.06A, Falsework Design and Drawings," of the Standard Specifications.

VIBRATION MONITORING EQUIPMENT

The Contractor shall provide portable seismographs for monitoring the velocities of ground vibrations resulting from construction activities. Seismographs shall be Model DS-477 Blastmate II as manufactured by Instantel Inc., Kanata (Ottawa), Ontario, Canada, Model VMS-500 as manufactured by Thomas Instruments, Inc., Spofford, NH, or Model NC5310/D, as manufactured by Nomis Inc., Birmingham, AL, or acceptable equivalent. The seismograph shall have the following minimum features:

1. Seismic range: 0.01 to 5 inches per second with an accuracy of ±5 percent of the measured peak particle velocity or better at frequencies between 10 Hertz and 100 Hertz, and with a resolution of 0.01 inches per second or less.
2. Frequency response (±3 dB points): 2 to 200 Hertz.
3. Three channels for simultaneous time-domain monitoring of vibration velocities in digital format on three perpendicular axes.
4. Two power sources: internal rechargeable battery and charger and 115 volts AC. Battery must be capable of supplying power to monitor vibrations continuously for up to 24 hours.
5. Capable of internal, dynamic calibration.
6. Direct writing to printer and capability to transfer data from memory to 3-1/2 inch magnetic disk. Instruments must be capable of producing strip chart recordings of readings on site within one hour of obtaining the readings. Provide computer software to perform analysis and produce reports of continuous monitoring.
7. Continuous monitoring mode must be capable of recording single-component peak particle velocities, and frequency of peaks with an interval of one second or less.

Whenever any product is specified by brand name and model number, such specifications shall be deemed to be used for the purpose of establishing a standard of quality and facilitating the description of the product desired. The term "acceptable equivalent" shall be understood to indicate a product that is the same or better than the product named in the specifications in function, quality, performance, reliability, and general configuration. This procedure is not to be construed as eliminating other manufacturers' suitable products of equal quality.

The Contractor may request to substitute an "acceptable equivalent" vibration monitoring equipment and shall submit complete comparative data to the Engineer for consideration of another product. Any request from the Contractor for consideration of a substitution shall clearly state the nature of the deviation from the product specified. Substitute products shall not be used in the work unless accepted by the Engineer in writing. The Engineer will be the sole judge of the suitability and equivalency of the proposed substitution.

The Contractor's instrumentation personnel shall conduct regular maintenance of seismograph installations.

All seismographs shall have been calibrated by the manufacturer or certified calibration laboratory within one year of their use on site. A current certificate of calibration shall be submitted to the Engineer with the Contractor's data.

A record of laboratory calibration shall be provided for all vibration-monitoring instruments to be used on site. Certification shall be provided to indicate that the instruments are calibrated and maintained in accordance with the equipment manufacturer's calibration requirements and that calibrations are traceable to the U. S. National Institute of Standards and Technology (NIST).

VIBRATION MONITORING

The Contractor shall furnish all installation tools, materials, and miscellaneous instrumentation components for vibration monitoring. At the above listed location, vibration monitoring and recording shall be performed during the course of all significant impact work, when that activity occurs within 20 meters of the said facilities. The 20 meters shall be measured from the edge of the construction activity.

The Contractor shall notify the Engineer at least 24 hours prior to starting a new vibration-producing construction task, and shall have the seismographs in place and functioning properly prior to any work within 20 meters as defined above. No work occurring within this zone shall occur unless monitoring equipment is functioning properly.

The equipment shall be set up in a manner such that an immediate warning is given when particle velocity equal to or exceeding 100 millimeter per second is produced. The warning emitted by the vibration-monitoring equipment shall be instantaneously transmitted to the responsible person designated by the Contractor by means of warning lights, audible sounds or electronic transmission.

Monitoring equipment shall be stationed within 0.9 meter of the exterior of the footing on the side facing the Contractor's work site.

When any reading on monitoring equipment equals or exceeds 100 millimeter per second, work shall immediately cease and the Contractor shall immediately notify the Engineer.

The seismograph vibration sensors shall be firmly mounted on the exposed face of the YB3 concrete pedestal and on the steel member of the column.

DATA COLLECTION

Prior to any vibration-producing demolition or construction activity, the Contractor shall collect seismograph data to document background vibrations at each monitoring location. This monitoring shall consist of a continuous recording of the maximum single-component peak particle velocities for one-minute intervals, which shall be printed on a strip chart. The background monitoring shall be performed for a minimum of two non-consecutive workdays, spanning the hours during which pile driving activities will take place.

The Contractor shall monitor vibration during pile driving. This monitoring shall consist of a continuous recording of the maximum single-component peak particle velocities for one-minute intervals, which shall be printed on a strip chart. During the monitoring, the Contractor shall document all events that are responsible for the measured vibration levels, and submit the documentation to the Engineer with the data as specified in section "Data Reduction, Processing, Plotting and Reporting" in these Special Provisions. A record form for documenting these events is included herein as Figure 2.

All vibration monitoring data shall be recorded contemporaneously and plotted continuously on a graph by the data acquisition equipment. Each graph shall show time-domain wave traces (particle velocity versus time) for each transducer with the same vertical and horizontal axes scale.

DATA REDUCTION, PROCESSING, PLOTTING AND REPORTING

Within 10 working days after the completion of the background vibration monitoring, the Contractor shall submit to the Engineer a hard copy report documenting the results at each of the monitoring locations.

During bridge demolition and construction, including pile driving, installation and removal of temporary towers and falsework, the Contractor shall provide weekly, hard copy reports summarizing any vibration monitoring data collected at the specified vibration-monitoring locations. The reports for each week shall be submitted on or before the end of the following week.

CONTRACT CHANGE ORDER

Change Requested by: Engineer

CCO 118	Suppl. No. 0	Contract No. 04 - 0120R4	Road SF-80-12.6/13.2	FED. AID LOC.: ACBRIM-080-1(097)N

All reports shall be signed by the approved Vibration Instrumentation Engineer, and shall include the following:

1. Project identification, including District, County, Route, Post Mile, Project Name and Bridge number as shown on the project plans.
2. Location of the monitoring equipment.
3. Location of vibration sources (e.g. traffic, demolition equipment, etc.)
4. Summary tables indicating the date, time and magnitude and frequency of maximum single-component peak particle velocity measured during each one-hour interval of the monitoring period.
5. Field data forms (construction vibration monitoring only).
6. Appendix graphs of the strip charts printed during the monitoring periods.

In addition to the hard copy data specified herein, the Contractor shall provide data on 3.5-inch diskettes with each report. Electronic data files for all instrument data shall be provided in dBASE IV (.DBF) format.

The Contractor shall not disclose any instrumentation data to third parties and shall not publish data without prior written consent of the State.

GRADING

All ground excavation due to work above shall be backfilled and graded to the satisfaction of the Engineer.

Estimated cost of Extra Work at Force Account $50,000.00

Estimated Cost: **Increase** ☑ **Decrease** ☐ **$50,000.00**

By reason of this order the time of completion will be adjusted as follows: 0 days

Submitted by

Signature	Resident Engineer BILL CASEY	Date 1-29-08

Approval Recommended by

Signature	Area Construction Manager DENNIS TURCHON	Date 1/29/08

Engineer Approval by

Signature	Area Construction Manager DENNIS TURCHON	Date 2/20/08

We the undersigned contractor, have given careful consideration to the change proposed and agree, if this proposal is approved, that we will provide all equipment, furnish the materials, except as may otherwise be noted above, and perform all services necessary for the work above specified, and will accept as full payment therefor the prices shown above.

NOTE: If you, the contractor, do not sign acceptance of this order, your attention is directed to the requirements of the specifications as to proceeding with the ordered work and filing a written protest within the time therein specified.

Contractor Acceptance by

Signature	(Print name and title) DANIEL B. Hamick, PRESIDENT	Date 2/08/08

DIST.	COUNTY	ROUTE	KILOMETER POST TOTAL PROJECT	SHEET NO.	TOTAL SHEETS
04	SF. Ala	80			

Caltrans Metric

REGISTERED ENGINEER - CIVIL

PLANS APPROVAL DATE

The State of California or its officers or agents shall not be responsible for the accuracy or completeness of electronic copies of this plan sheet.

REGISTERED PROFESSIONAL ENGINEER A.L. ELY No. 18880 Exp. 6-30-05 CIVIL STATE OF CALIFORNIA

T.Y. LIN / MOFFATT & NICHOL
825 BATTERY STREET
SAN FRANCISCO, CA 94111

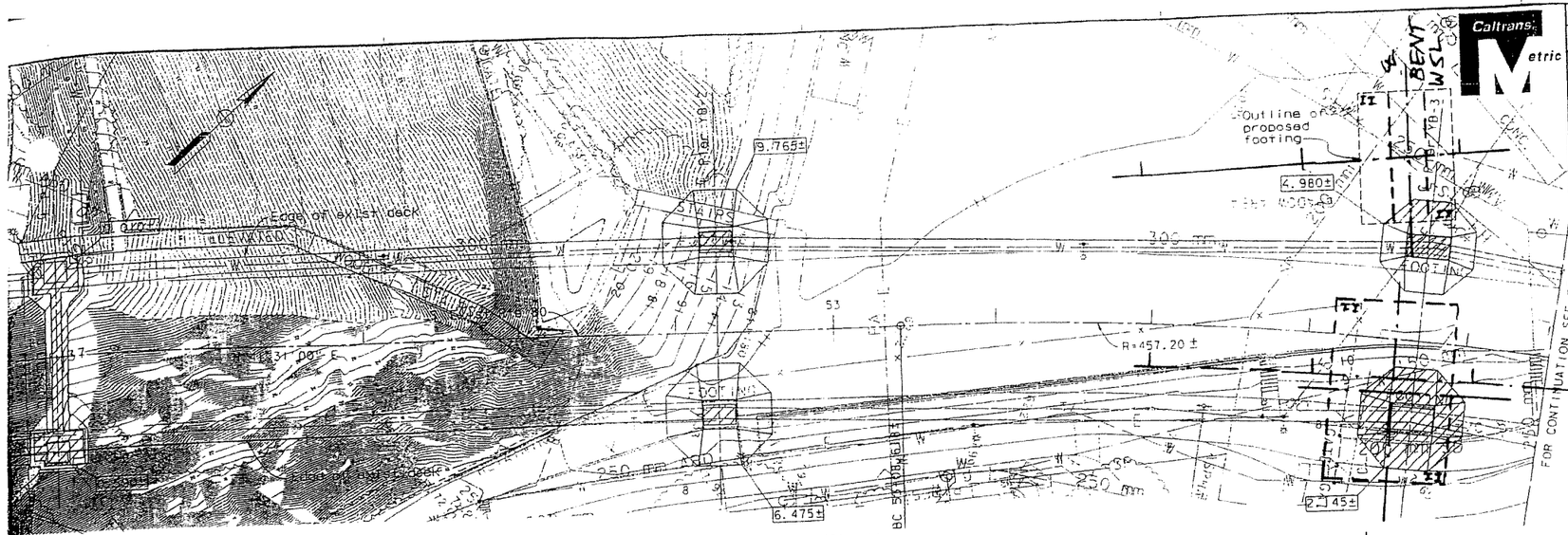

PARTIAL PLAN
1:300

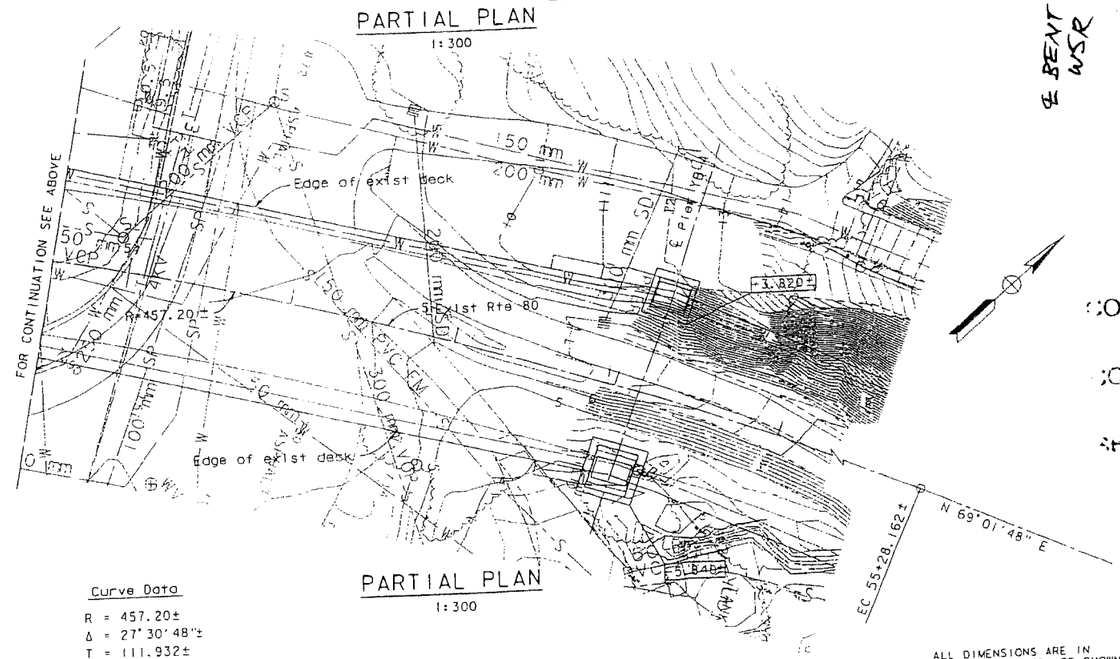

PARTIAL PLAN
1:300

Curve Data

R = 457.20±
Δ = 27°30'48"±
T = 111.932±
L = 219.547±

CONTRACT NO. 04-0120R4

CONTRACT CHANGE ORDER NO 118

SHEET 5 OF 6

LEGEND

Limits of structure removal

Denotes bottom of exist footing elevation

100% SUBMITTAL

ALL DIMENSIONS ARE IN METERS UNLESS OTHERWISE SHOWN

SAN FRANCISCO OAKLAND BAY BRIDGE
EAST SPAN SEISMIC SAFETY PROJECT

YBI TRANSITION STRUCTURES

DEMOLITION YB-1 TO YB-4 FDTN PLAN

SCALE:	VERT. DATUM	HORZ. DATUM	DESIGN	BY Desai	CHECKED Jain
PHOTOGRAMMETRY AS OF:		ALIGNMENT TIES	DETAILS	BY	CHECKED Jain
SURVEYED	BY	DRAFTED BY	QUANTITIES	BY	CHECKED E. Nichol
FIELD CHECKED	BY	CHECKED BY			

PREPARED FOR THE STATE OF CALIFORNIA DEPARTMENT OF TRANSPORTATION

Jal Birdy
PROJECT ENGINEER

BRIDGE NO. 34-0006 L/R
KILOMETER POST

CU 04
EA 012061

DISREGARD PRINTS BEARING EARLIER REVISION DATES

REVISION DATES (PRELIMINARY STAGE ONLY)

SHEET 23 OF 197

ORIGINAL SCALE IN MILLIMETERS FOR REDUCED PLANS 0 10 20 30 40 50 60 70 80 90 100

USERNAME => LMOI DATE PLOTTED => 03/28/02 TIME PLOTTED => 05:13:34 PM

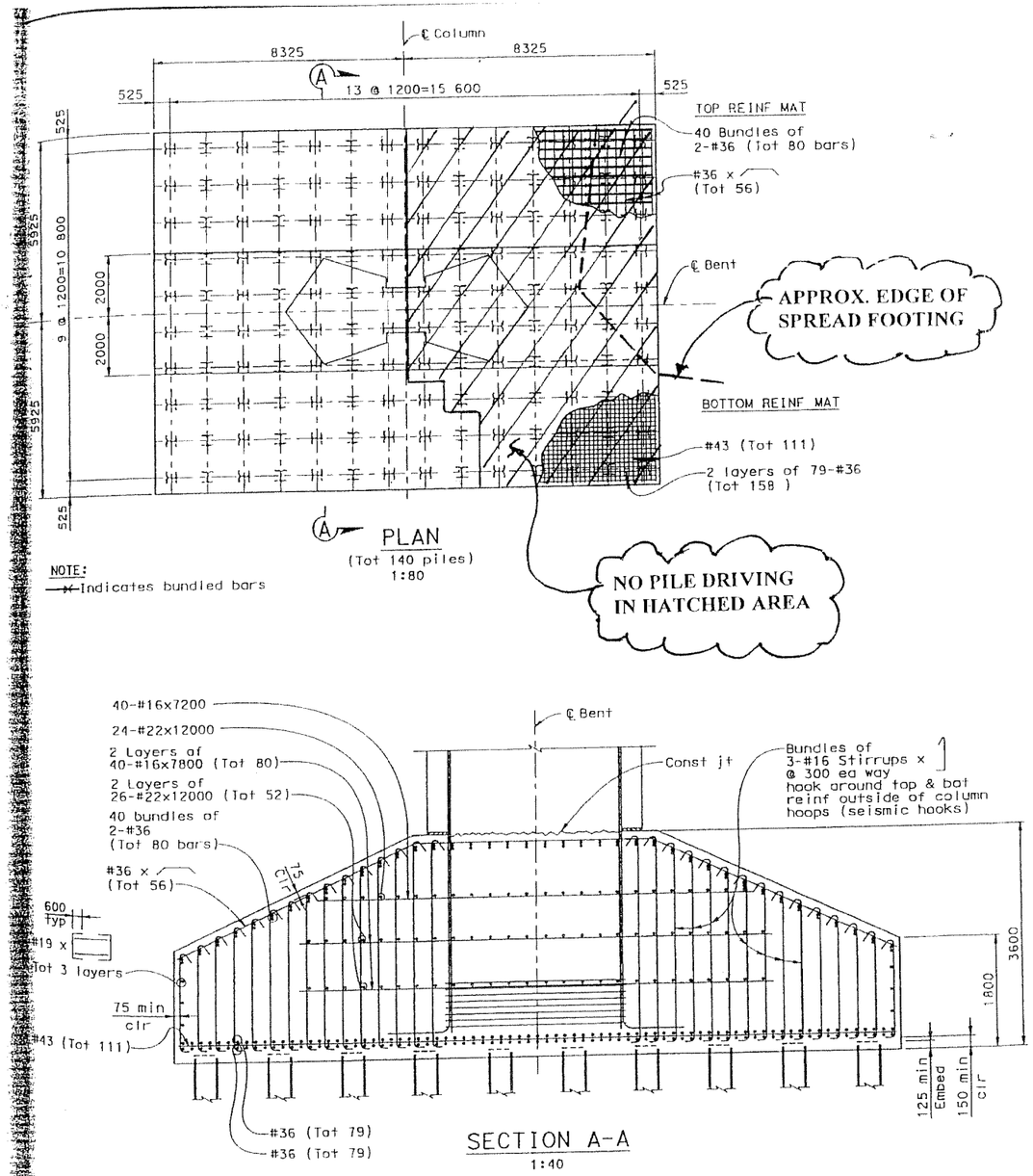

PLAN
(Tot 140 piles)
1:80

NOTE:
→← Indicates bundled bars

SECTION A-A
1:40

DISL	COUNTY	ROUTE	TOTAL PROJECT	NO.	SHEETS
04	SF	80			

Caltrans Metric

REGISTERED ENGINEER - CIVIL

PLANS APPROVAL DATE

The State of California or its officers or agents shall not be responsible for the accuracy or completeness of electronic copies of this plan sheet.

REGISTERED PROFESSIONAL ENGINEER A.L. ELY No. 18880 Exp. 6-30-07 CIVIL STATE OF CALIFORNIA

T.Y. LIN / MOFFATT & NICHOL
TWO HARRISON STREET
SAN FRANCISCO, CA 94105

CONTRACT NO. 04-0120R4

CONTRACT CHANGE ORDER NO 118

SHEET 6 OF 6

YBI #1 - CHECKED PLANS

ALL DIMENSIONS ARE IN MILLIMETERS UNLESS OTHERWISE SHOWN

SAN FRANCISCO OAKLAND BAY BRIDGE
EAST SPAN SEISMIC SAFETY PROJECT

YBI TRANSITION STRUCTURES

BENT W5L DETAILS NO.3

DESIGN	BY Dodd	CHECKED Desai	
DETAILS	BY van Ryn/Zucchi/Mai	CHECKED Jain	
QUANTITIES	BY Liao	CHECKED E. Nichol	

PREPARED FOR THE STATE OF CALIFORNIA DEPARTMENT OF TRANSPORTATION

Jal Birdy
PROJECT ENGINEER

BRIDGE NO. 34-0006 L/R
KILOMETER POST 12.8

CU 04251
EA 0120S1

DISREGARD PRINTS BEARING EARLIER REVISION DATES

REVISION DATES (PRELIMINARY STAGE ONLY)

SHEET 46 OF 211

ORIGINAL SCALE IN MILLIMETERS FOR REDUCED PLANS 0 10 20 30 40 50 60 70 80 90 100

OVERSIGHT
BERNARD CHAN, JUAN F. CARPIO

E OF CALIFORNIA - DEPARTMENT OF TRANSPORTATION

RECEIVED

NTRACT CHANGE ORDER MEMORANDUM

DATE: 1/23/2008 Page 1 of 1

O: MIKE FORNER / DENNIS TURCHON	FILE: E.A. 04 - 0120R4 007148 MAR -4 08
	CO-RTE-PM SF-80-12.6/13.2
FROM: BILL CASEY	FED. NO. ACBRIM-080-1(097)N
CCO#: 118 SUPPLEMENT#: 0 Category Code: AXZZ	CONTINGENCY BALANCE (incl. this change) $89,927,792.86
COST: $50,000.00 INCREASE ☑ DECREASE ☐	HEADQUARTERS APPROVAL REQUIRED? ☐ YES ☑ NO
SUPPLEMENTAL FUNDS PROVIDED: $0.00	IS THIS REQUEST IN ACCORDANCE WITH ENVIRONMENTAL DOCUMENTS? ☑ YES ☐ NO
CCO DESCRIPTION: Bent W5L Vibration Monitoring	**PROJECT DESCRIPTION:** CONSTRUCT ROUTE 80 TEMP BYPASS STRUCTURE

Original Contract Time:	Time Adj. This Change:	Previously Approved CCO Time Adjustments:	Percentage Time Adjusted: (including this change)	Total # of Unreconciled Deferred Time CCO(s): (including this change)
475 Day(s)	0 Day(s)	1195 Day(s)	252 %	7

THIS CHANGE ORDER PROVIDES FOR:

Providing Geotechnical support work during the pile driving operation at Bent W5L.

This change was requested by Mike Whiteside, YBI Coordination Engineer, per his memo dated 11 December 2007 and Saba Mohan, Geotechnical Design-Toll Bridges, per his email dated 10 December 2007. This change is necessary to determined any geotechnical uncertainties during the pile driving operation at Bent W5L for the Yerba Buena Island Transition Structure (YBITS).

The scope of work includes installing a settlement and vibration monitoring system that would enable the State to determined any movement in the existing concrete footing @ YB3 of Bridge No. 33-0025 East Bay Bridge. In addition, grading work is required once the monitoring work is completed.

The Contractor shall be compensated by Extra Work at Force Account at an estimated cost of $ 50,000.00, which will be financed by the contract's contingency funds. A cost analysis is on file and is in the project records.

There will be no time adjustment by reason of this change since the work involved did not affect the controlling operation.

This change was cocurred by Alec Melkonians - Asst. Project Manager and Hong Wong - Project Engineer.

Maintenance concurrence is not required as the work doesn't affect any permanent roadway features.

CONCURRED BY:		
Construction Engineer:		Date
Bridge Engineer:	Mike Whiteside, Toll Bridge Design	Date 12/11/07
Project Engineer:	Hong Wong, PE	Date 1/28/08
Project Manager:	Alec Melkonians	Date 1/28/08
FHWA Rep.:		Date
Environmental:		Date
Other (specify):	Saba Mohan, Geotech Design	Date 12/10/07
Other (specify):		Date
District Prior Approval By:		Date
HQ (Issue Approve) By:		Date
Resident Engineer's Signature:		Date
		1-29-09

ESTIMATE OF COST	THIS REQUEST	TOTAL TO DATE
ITEMS	$0.00	$0.00
FORCE ACCOUNT	$50,000.00	$50,000.00
AGREED PRICE	$0.00	$0.00
ADJUSTMENT	$0.00	$0.00
TOTAL	$50,000.00	$50,000.00

FEDERAL PARTICIPATION

☐ PARTICIPATING ☐ PARTICIPATING IN PART ☐ NONE
☐ NON-PARTICIPATING (MAINTENANCE) ☑ NON-PARTICIPATING

FEDERAL SEGREGATION (if more than one Funding Source or P.I.P. type)
☑ CCO FUNDED PER CONTRACT ☐ CCO FUNDED AS FOLLOWS

FEDERAL FUNDING SOURCE	PERCENT

ADA Notice: For individuals with sensory disabilities, this document is available in alternate formats. For information call: (916) 654-6410 or TDD (916) 654-3880 or write Records and Forms Management, 1120 N Street, MS-89, Sacramento, CA 95814.

CONTRACT CHANGE ORDER

Change Requested by: Engineer

CCO 118	Suppl. No. 1	Contract No. 04 - 0120R4	Road SF-80-12.6/13.2	FED. AID LOC.: ACBRIM-080-1(097)N

To: CC MYERS INC

You are directed to make the following changes from the plans and specifications or do the following described work not included in the plans and specifications for this contract. ***NOTE: This change order is not effective until approved by the Engineer.***

Description of work to be done, estimate of quantities and prices to be paid. (Segregate between additional work at contract price, agreed price and force account.) Unless otherwise stated, rates for rental of equipment cover only such time as equipment is actually used and no allowance will be made for idle time. This last percentage shown is the net accumulated increase or decrease from the original quantity in the Engineer's Estimate.

Estimate of Decrease in Contract Item at Contract Price:

Item No. 5: VIBRATION MONITORING
-1 LS (–100.00%) $50,000.00 /LS = –$50,000.00 (–100.00%)

In accordance with Section 4-1.03B(3), "Eliminated Items," of the Standard Specifications, the adjustment due to the elimination of Item # 5, Vibration Monitoring, is zero.

Estimated total cost for Decrease in Contract Item.....($50,000.00)

Extra Work at Force Account:

As authorized by the Engineer, provide photo survey and vibration monitoring for United States Coast Guard building structures Quarters 1/Nimitz House and Quarters 2. In addition, provide vibration monitoring for USCG barracks. All work shall comply with the following requirements:

I. PHOTO SURVEY OF EXISTING FACILITIES

The work shall consist of performing photo surveys, pre-construction and post-construction of the following existing facilities and other improvements, which might be damaged by the operations of the Contractor, during construction:

1. Building /Quarters 1 (Nimitz House) in ESA 2b.
2. Navy Sundial Plaza/Planted Area inside SCA

The Contractor shall perform the pre-construction photo survey prior to performing pile driving, installation and removal of temporary towers and falsework, and bridge removal in the vicinity of the above facilities. Photo surveys shall be conducted in conformance with the requirements in these special provisions. The scope of the examination will include cracks in structures, settlement, leakage, and the like. Crack monitoring shall be performed on all existing cracks with initial crack-gauge installation as part of the photo survey project, as directed by the Engineer. Such monitoring shall include recording gauge readings once or twice a week as determined by the Engineer. A report detailing such readings shall be provided to the Engineer.

Pre-construction photo survey of the listed existing facilities shall be completed prior to start of pile driving operations, installation of temporary towers and falsework, and bridge removal, and a post-construction photo survey shall be completed after removal of temporary towers and falsework .

The Contractor shall submit to the Engineer for approval a complete description of the work to be completed for each surveyed location. The work to be completed shall consist of records of observations, video tapes, and photographs.

The photograph prints shall be 12.7 cm x 17.8 cm. All negative shall be provided. All photos shall be identified by date, location, orientation, and labeled with a detailed description. All photos shall be submitted in a 3-ring binder and shall include protective photo sleeves, building layout (including layout of each floor as necessary), and a summary sheet indexing all photos.

The pre-construction survey records and the documentation specified above shall be submitted to the Engineer prior to commencement of any significant impact work as defined above. The Engineer shall have 5 working days to review the submittal for adequacy. No work shall take place until the Engineer approves the pre-construction survey records.

The package of the post-construction survey documents shall be submitted within 10 working days after the impact work has been completed adjacent to each of the specified facilities.

The photo survey package may be submitted in portions based on Stage Construction, if in the opinion of the Engineer, detrimental actions can be avoided in the subsequent stages. The submittal package shall include all records, documents, photos, videotapes, and observations. The Engineer shall have five working days to review the submittal for adequacy.

The Contractor shall provide the Engineer with 3 copies of approved photo survey records.

The above records, video tapes and photographs are intended for use as indisputable evident in ascertaining the extent damage which may occur as a result of the Contractor's operations and are for the protection of the listed property owners, the Contractor, and the State, and will be means of determining whether and to what extend damage, resulting from the Contractor's operations occurred during the contract work.

II. VIBRATION MONITORING

This work shall consist of furnishing, installing and maintaining vibration-monitoring instrumentation; collecting vibration data; and interpreting and reporting the results of vibration monitoring as specified herein. This work shall include the implementation by the Contractor of any required remedial and precautionary measures, using the vibration monitoring data, to protect the following facilities from excess vibration during construction activities:

1. Building / Quarters 1 (Nimitz House) in ESA 2b.
2. USCG Barracks

GENERAL

The Contractor shall be responsible for the following, including but not limited to:

1. Furnish and install vibration-monitoring instrumentation.
2. Protect from damage and maintain instruments installed by the Contractor and repair or replace damaged or inoperative instruments.
3. Collect, interpret and report data from instrumentation specified herein.
4. Implement response actions.

The Department is not responsible for the safety of the work based on vibration-monitoring data, and compliance with this Section does not relieve the Contractor of full responsibility for damage caused by the Contractor's operations.

VIBRATION MONITORING PERSONNEL

The Contractor's vibration-monitoring personnel shall have the qualifications specified herein. These personnel may be on the staff of the Contractor. However, they shall not be employed nor compensated by subcontractors, or by persons or entities hired by subcontractors, who will provide other services or material for the project.

The Contractor's vibration-monitoring personnel shall include a Vibration Instrumentation Engineer who meets one of the following minimum qualifications:

1. Registered Geophysicist or Professional Engineer in the State of California with at least 5 years of experience in the installation and use of vibration-monitoring instrumentation and data interpretation.
2. Graduate level degree from an accredited University in Physics or Acoustics with at least 5 years experience in the installation and use of vibration-monitoring instrumentation and data interpretation.

The Vibration Instrumentation Engineer shall:

1. Be on site and supervise the initial installation of each vibration-monitoring instrument.
2. Supervise interpretations of vibration-monitoring data.

The Contractor's vibration-monitoring personnel shall be subject to the Engineer's approval.

SUBMITTALS

Prior to any significant impact work and prior to performing any vibration monitoring, the Contractor shall submit to the Engineer a written vibration monitoring plan, vibration monitoring equipment manufacturer's product data and the resumes of the Vibration Instrumentation Engineer and any vibration monitoring technical support personnel.

The vibration monitoring equipment manufacturer's data shall describe in detail all vibration-monitoring instruments. Requests for consideration of substitutions, if any, together with product data and instruction manuals for requested substitutions.

The resumes of the Vibration Instrumentation Engineer and any vibration monitoring technical support personnel shall be sufficient to define details of relevant experience.

The written vibration monitoring plan shall detail the procedures for vibration monitoring. Such details shall include, but not limited to:

1. The name of the Firm providing the vibration monitoring services.
2. Description of the instrumentation and equipment to be used.
3. Measurement locations and methods for mounting the vibration sensors.
4. Procedures for data collection and analysis.
5. Means and methods of providing warning when the particle velocity equals or exceeds specified limits.
6. Generalized plans of action to be implemented in the event the particle velocity equals or exceeds specified limits. The generalized plans of action shall be positive measures by the Contractor to control vibrations (e.g. using alternative construction methods).
7. Name of the "responsible person" designated by the Contractor. The responsible person designated by the Contractor shall have the authority to stop the work causing the vibration.

Within 5 days of receipt of each instrument at the site, the Contractor shall submit to the Engineer a copy of the instruction manual and the laboratory calibration and test equipment certification.

In addition, the Contractor shall submit data and reports in conforming with the provisions in "Data Reduction, Processing, Plotting and Reporting," of these special provisions.

The review period shall be the same as those set forth in Section 51-1.06A, "Falsework Design and Drawings," of the Standard Specifications.

VIBRATION MONITORING EQUIPMENT

The Contractor shall provide portable seismographs for monitoring the velocities of ground vibrations resulting from construction activities. Seismographs shall be Model DS-477 Blastmate II as manufactured by Instantel Inc., Kanata (Ottawa), Ontario, Canada, Model VMS-500 as manufactured by Thomas Instruments, Inc., Spofford, NH, or Model NC5310/D, as manufactured by Nomis Inc., Birmingham, AL, or acceptable equivalent. The seismograph shall have the following minimum features:

1. Seismic range: 0.3 to 102-mm per second with an accuracy of +5 percent of the measured peak particle velocity or better at frequencies between 10 Hertz and 100 Hertz, and with a resolution of 0.3-mm per second or less.
2. Frequency response (+3 dB points): 2 to 200 Hertz.
3. Three channels for simultaneous time-domain monitoring of vibration velocities in digital format on three perpendicular axes.
4. Two power sources: internal rechargeable battery and charger and 115 volts AC. Battery must be capable of supplying power to monitor vibrations continuously for up to 24 hours.
5. Capable of internal, dynamic calibration.
6. Direct writing to printer and capability to transfer data from memory to 90-mm magnetic disk. Instruments must be capable of producing strip chart recordings of readings on site within one hour of obtaining the readings. Provide computer software to perform analysis and produce reports of continuous monitoring.
7. Continuous monitoring mode must be capable of recording single-component peak particle velocities, and frequency of peaks with an interval of one minute or less.

Whenever any product is specified by brand name and model number, such specifications shall be deemed to be used for the purpose of establishing a standard of quality and facilitating the description of the product desired. The term "acceptable equivalent" shall be understood to indicate a product that is the same or better than the product named in the specifications in function, quality, performance, reliability, and general configuration. This procedure is not to be construed as eliminating other manufacturers' suitable products of equal quality.

The Contractor may request to substitute an "acceptable equivalent" vibration monitoring equipment and shall submit complete comparative data to the Engineer for consideration of another product. Any request from the Contractor for consideration of a substitution shall clearly state the nature of the deviation from the product specified. Substitute products shall not be used in the work unless accepted by the Engineer in writing. The Engineer will be the sole judge of the suitability and equivalency of the proposed substitution.

The Contractor's instrumentation personnel shall conduct regular maintenance of seismograph installations.

All seismographs shall have been calibrated by the manufacturer or certified calibration laboratory within one year of their use on site. A current certificate of calibration shall be submitted to the Engineer with the Contractor's data.

A record of laboratory calibration shall be provided for all vibration-monitoring instruments to be used on site. Certification shall be provided to indicate that the instruments are calibrated and maintained in accordance with the equipment manufacturer's calibration requirements and that calibrations are traceable to the U. S. National Institute of Standards and Technology (NIST).

VIBRATION MONITORING

The Contractor shall furnish all installation tools, materials, and miscellaneous instrumentation components for vibration monitoring. At the above listed locations, vibration monitoring and recording shall be performed during the course of all significant impact work, when that activity occurs within 26 meters of the said facilities. The 26 meters shall be measured from the edge of the construction activity.

The Contractor shall notify the Engineer at least 24 hours prior to starting a new vibration-producing construction task, and shall have the seismographs in place and functioning properly prior to any work within 26 meter as defined above. No work occurring within this zone shall occur unless monitoring equipment is functioning properly.

The equipment shall be set up in a manner such that an immediate warning is given when particle velocity equal to or exceeding 105 millimeter per second is produced. The warning emitted by the vibration-monitoring equipment shall be instantaneously transmitted to the responsible person designated by the Contractor by means of warning lights, audible sounds or electronic transmission.

Monitoring equipment shall be stationed within 0.9 meter of the exterior of designated buildings on the side facing the Contractor's work site. For buildings whose frontage exceeds 60 meter, at least 2 monitors shall be utilized at that location.

When any reading on monitoring equipment equals or exceeds 5 millimeter per second, work shall immediately cease and the Contractor shall immediately notify the Engineer. If directed by the Engineer, the Contractor shall submit within 24 hours a detailed specific plan of action so that the vibration limits are not violated. The Contractor shall take whatever action is necessary to reduce and maintain the monitoring equipment reading below a particle velocity of 5 millimeter per second.

The seismograph vibration sensors shall be firmly mounted on the surface slab of concrete or asphalt, or firmly set in undisturbed soil

DATA COLLECTION

Prior to any vibration-producing demolition or construction activity, the Contractor shall collect seismograph data to document background vibrations at each monitoring location. This monitoring shall consist of a continuous recording of the maximum single-component peak particle velocities for one-minute intervals, which shall be printed on a strip chart. The background monitoring shall be performed for a minimum of two non-consecutive workdays, spanning the hours during which demolition and construction activities will take place.

The Contractor shall monitor vibration during demolition and other significant vibration-producing construction activities. This monitoring shall consist of a continuous recording of the maximum single-component peak particle velocities for one-minute intervals, which shall be printed on a strip chart. During the monitoring, the Contractor shall document all events that are responsible for the measured vibration levels, and submit the documentation to the Engineer with the data as specified in section "Data Reduction, Processing, Plotting and Reporting" in these Special Provisions. A record form for documenting these events is included herein as Figure 2.

All vibration monitoring data shall be recorded contemporaneously and plotted continuously on a graph by the data acquisition equipment. Each graph shall show time-domain wave traces (particle velocity versus time) for each transducer with the same vertical and horizontal axes scale.

DATA REDUCTION, PROCESSING, PLOTTING AND REPORTING

Within 10 working days after the completion of the background vibration monitoring, the Contractor shall submit to the Engineer a hard copy report documenting the results at each of the monitoring locations.

During demolition and construction, including pile driving, installation and removal of temporary towers and falsework, the Contractor shall provide weekly, hard copy reports summarizing any vibration monitoring data collected at the specified vibration-monitoring locations. The reports for each week shall be submitted on or before the end of the following week.

All reports shall be signed by the approved Vibration Instrumentation Engineer, and shall include the following:

1. Project identification, including District, County, Route, Kilometer Post , Project Name and Bridge number as shown on the project plans.
2. Location of the monitoring equipment.
3. Location of vibration sources (e.g. traffic, demolition equipment, etc.)

CONTRACT CHANGE ORDER

Change Requested by: Engineer

CCO: 118	Suppl. No. 1	Contract No. 04 - 0120R4	Road SF-80-12.6/13.2	FED. AID LOC.: ACBRIM-080-1(097)N

3. Location of vibration sources (e.g. traffic, demolition equipment, etc.)
4. Summary tables indicating the date, time and magnitude and frequency of maximum single-component peak particle velocity measured during each one-hour interval of the monitoring period.
5. Field data forms (construction vibration monitoring only).
6. Appendix graphs of the strip charts printed during the monitoring periods.

In addition to the hard copy data specified herein, the Contractor shall provide data on 90-mm diskettes with each report. Electronic data files for all instrument data shall be provided in dBASE IV (.DBF) format.

The Contractor shall not disclose any instrumentation data to third parties and shall not publish data without prior written consent of Caltrans.

In addition, compensate the Contractor for any delays or additional costs incurred due to this change.

Estimated Cost of Extra Work at Force Account.....$80,000.00

Adjustment of Compensation at Lump Sum:

Compensate the Contractor for the costs incurred due to the elimination of work on Item #5, Vibration Monitoring, pursuant to Section 4-1.03B(3), "Decreases of More Than 25 Percent," of the Standard Specifications.

For this work, the Contractor agrees to a lump sum payment of $20,050.00. This sum constitutes full and complete compensation, including all markups for this change.

Total cost of Adjustment of Compensation at Lump Sum $20,050.00

Estimated Cost: Increase ☑ Decrease ☐ **$50,050.00**

By reason of this order the time of completion will be adjusted as follows: 0 days

Submitted by

Signature	Resident Engineer BILL CASEY	Date 7-5-08

Approval Recommended by

Signature	Area Construction Manager DENNIS TURCHON	Date 7/10/08

Engineer Approval by

Signature	Area Construction Manager DENNIS TURCHON	Date 7/21/08

We the undersigned contractor, have given careful consideration to the change proposed and agree, if this proposal is approved, that we will provide all equipment, furnish the materials, except as may otherwise be noted above, and perform all services necessary for the work above specified, and will accept as full payment therefor the prices shown above.

NOTE: If you, the contractor, do not sign acceptance of this order, your attention is directed to the requirements of the specifications as to proceeding with the ordered work and filing a written protest within the time therein specified.

Contractor Acceptance by

Signature	(Print name and title) DEWEY C. LEE JR. Contract Manager	Date 7/17/08

CONTRACT CHANGE ORDER

Change Requested by: Engineer

CCO 118	Suppl. No. 2	Contract No. 04 - 0120R4	Road SF-80-12.6/13.2	FED. AID LOC.:

To: CC MYERS INC

You are directed to make the following changes from the plans and specifications or do the following described work not included in the plans and specifications for this contract. ***NOTE: This change order is not effective until approved by the Engineer.***

Description of work to be done, estimate of quantities and prices to be paid. (Segregate between additional work at contract price, agreed price and force account.) Unless otherwise stated, rates for rental of equipment cover only such time as equipment is actually used and no allowance will be made for idle time. This last percentage shown is the net accumulated increase or decrease from the original quantity in the Engineer's Estimate.

Extra Work at Force Account:

Provide additional funds for work as outlined in Contract Change Order No. 118 - Supplemental No. 1.

Estimated Cost of Extra Work at Force Account $40,000.00

Estimated Cost: **Increase** ☑ **Decrease** ☐ **$40,000.00**

By reason of this order the time of completion will be adjusted as follows: 0 days

Submitted by

Signature	Resident Engineer	Date
	BILL CASEY	12-11-09

Approval Recommended by

Signature	Area Construction Manager	Date
Deanna Vilcheck	DEANNA VILCHECK	12/14/09

Engineer Approval by

Signature	Area Construction Manager	Date
Deanna Vilcheck	DEANNA VILCHECK	12/14/09

We the undersigned contractor, have given careful consideration to the change proposed and agree, if this proposal is approved, that we will provide all equipment, furnish the materials, except as may otherwise be noted above, and perform all services necessary for the work above specified, and will accept as full payment therefor the prices shown above.

NOTE: If you, the contractor, do not sign acceptance of this order, your attention is directed to the requirements of the specifications as to proceeding with the ordered work and filing a written protest within the time therein specified.

Contractor Acceptance by

Signature	(Print name and title)	Date
N/A	N/A	N/A

STATE OF CALIFORNIA - DEPARTMENT OF TRANSPORTATION

CONTRACT CHANGE ORDER MEMORANDUM

DATE: 12/2/2009 Page 1 of 2

TO: MIKE FORNER / DEANNA VILCHECK	FILE: E.A. 04 - 0120R4
	CO-RTE-PM SF-80-12.6/13.2
FROM: BILL CASEY	FED. NO.
CCO#: **118** SUPPLEMENT#: **2** Category Code: **AXZZ**	CONTINGENCY BALANCE (incl. this change) **$44,426,204.59**
COST: **$40,000.00** INCREASE ☑ DECREASE ☐	HEADQUARTERS APPROVAL REQUIRED? ☐ YES ☑ NO
SUPPLEMENTAL FUNDS PROVIDED: **$0.00**	IS THIS REQUEST IN ACCORDANCE WITH ENVIRONMENTAL DOCUMENTS? ☑ YES ☐ NO
CCO DESCRIPTION: Add Funds for USCG Vibration Monitoring	**PROJECT DESCRIPTION:** CONSTRUCT ROUTE 80 TEMP BYPASS STRUCTURE

Original Contract Time:	Time Adj. This Change:	Previously Approved CCO Time Adjustments:	Percentage Time Adjusted: (including this change)	Total # of Unreconciled Deferred Time CCO(s): (including this change)
475 Day(s)	**0** Day(s)	**1600** Day(s)	**337** %	**0**

THIS CHANGE ORDER PROVIDES FOR:

...additional funds for providing photo survey and vibration monitoring work for United States Coast Guard (USCG) building structures Quarters 1/Nimitz House and Quarters 2. In addition, provide vibration monitoring work for USCG barracks adjacent to the USCG temporary access road.

This project, the Yerba Buena Island Detour (YBID), was awarded in March 2004 to construct a detour that will allow for the tie in of the new east span of the San Francisco Oakland Bay Bridge to Yerba Buena Island. The YBID encompasses three main structures, the East Tie-In to the existing bridge, the West Tie-In (WTI) to Yerba Buena Island, and the Viaduct structure between the two tie ins.

Two separate Department strategy memorandums, dated December 14, 2006 and December 25, 2006, approved by Tony Anziano - Toll Bridge Program Manager and Richard Land - Chief Engineer, recommended that the Department assume responsibility for the designs of the East Tie-In (ETI) and West Tie-In (WTI) portions of this contract, and incorporated seismic retrofit work of the permanent Yerba Buena Island Transition Structure (YBITS) onto this project. The approval of these strategy memorandums extended the project completion date approximately 5 years.

This change is necessary to determined any geotechnical uncertainties such as movement, cracks, and settlement during pile driving operations or any other construction work at Bent W7 for the Yerba Buena Island Transition Structure (YBITS) and along Bent 49 through Bent 50 for the Temporary Bypass Structure (TBS).

The scope of work includes installing a vibration monitoring system and performing photo survey that would enable the State to determined any adverse effects from pile driving operations or any other construction work at locations stated above.

The Contractor shall be compensated for this work by Extra Work at Force Account for an estimated cost of $40,000.00 which shall be financed by the contract's contingency funds. A cost analysis is on file and is in the project records.

The Contractor's signature is not required for additional funds for Extra Work at Force Account change orders. Therefore this change order is being issued unilaterally.

There will be no time adjustment by reason of this change since the work involved does not affect the controlling operation.

CONTRACT CHANGE ORDER MEMORANDUM

CONCURRED BY:		
Construction Engineer:	Bill Casey, Resident Engineer	Date 12-11-09
Bridge Engineer:		Date
Project Engineer:		Date
Project Manager:		Date
FHWA Rep.:		Date
Environmental:		Date
Other (specify):		Date
Other (specify):		Date
District Prior Approval By:		Date
HQ (Issue Approve) By:		Date
Resident Engineer's Signature:		Date

12-11-09

ESTIMATE OF COST

	THIS REQUEST	TOTAL TO DATE
ITEMS	$0.00	($50,000.00)
FORCE ACCOUNT	$40,000.00	$170,000.00
AGREED PRICE	$0.00	$0.00
ADJUSTMENT	$0.00	$20,050.00
TOTAL	$40,000.00	$140,050.00

FEDERAL PARTICIPATION

☐ PARTICIPATING ☐ PARTICIPATING IN PART ☑ NONE
☐ NON-PARTICIPATING (MAINTENANCE) ☐ NON-PARTICIPATING

FEDERAL SEGREGATION (if more than one Funding Source or P.I.P. type)
☐ CCO FUNDED PER CONTRACT ☐ CCO FUNDED AS FOLLOWS

FEDERAL FUNDING SOURCE	PERCENT

STATE OF CALIFORNIA - DEPARTMENT OF TRANSPORTATION

CONTRACT CHANGE ORDER

Change Requested by: Engineer

CCO: 118	Suppl. No. 3	Contract No. 04 - 0120R4	Road SF-80-12.6/13.2	FED. AID LOC.:

To: CC MYERS INC

You are directed to make the following changes from the plans and specifications or do the following described work not included in the plans and specifications for this contract. ***NOTE: This change order is not effective until approved by the Engineer.***

Description of work to be done, estimate of quantities and prices to be paid. (Segregate between additional work at contract price, agreed price and force account.) Unless otherwise stated, rates for rental of equipment cover only such time as equipment is actually used and no allowance will be made for idle time. This last percentage shown is the net accumulated increase or decrease from the original quantity in the Engineer's Estimate.

Extra Work at Force Account:

Provide additional funds.

Estimated cost of Extra Work at Force Account $100,000.00

RECEIVED
011627 MAR 16 9

Estimated Cost: Increase ☑ Decrease ☐ **$100,000.00**

By reason of this order the time of completion will be adjusted as follows: 0 days

Submitted by

Signature	Resident Engineer	Date
Deanna Vilcheck	for BILL CASEY	2/11/10

Approval Recommended by

Signature	Area Construction Manager	Date
Deanna Vilcheck	DEANNA VILCHECK	2/11/10

Engineer Approval by

Signature	Area Construction Manager	Date
Pete E Siegenthal	for DEANNA VILCHECK	2/18/10

We the undersigned contractor, have given careful consideration to the change proposed and agree, if this proposal is approved, that we will provide all equipment, furnish the materials, except as may otherwise be noted above, and perform all services necessary for the work above specified, and will accept as full payment therefor the prices shown above.

NOTE: If you, the contractor, do not sign acceptance of this order, your attention is directed to the requirements of the specifications as to proceeding with the ordered work and filing a written protest within the time therein specified.

Contractor Acceptance by

Signature	(Print name and title)	Date
N/A		

STATE OF CALIFORNIA - DEPARTMENT OF TRANSPORTATION

CONTRACT CHANGE ORDER MEMORANDUM

TO: MIKE FORNER / DEANNA VILCHECK	FILE: **E.A.** 04 - 0120R4
	CO-RTE-PM SF-80-12.6/13.2
FROM: BILL CASEY	**FED. NO.**
CCO#: **118** SUPPLEMENT#: **3** Category Code: **AXZZ**	CONTINGENCY BALANCE (incl. this change) **$41,350,322.59**
COST: **$100,000.00** INCREASE ☑ DECREASE ☐	HEADQUARTERS APPROVAL REQUIRED? ☑ YES ☐ NO
SUPPLEMENTAL FUNDS PROVIDED: **$0.00**	IS THIS REQUEST IN ACCORDANCE WITH ENVIRONMENTAL DOCUMENTS? ☑ YES ☐ NO
CCO DESCRIPTION: Add Funds for USCG Vibration Monitoring	**PROJECT DESCRIPTION:** CONSTRUCT ROUTE 80 TEMP BYPASS STRUCTURE

Original Contract Time:	Time Adj. This Change:	Previously Approved CCO Time Adjustments:	Percentage Time Adjusted: (including this change)	Total # of Unreconciled Deferred Time CCO(s): (including this change)
475 Day(s)	**0** Day(s)	**1660** Day(s)	**349** %	**0**

THIS CHANGE ORDER PROVIDES FOR:

Additional funding to provide photo survey and vibration monitoring for the adjacent US Coast Guard facilities.

This project was awarded in March 2004 to construct a detour that will allow for the tie in of the new east span of the San Francisco Oakland Bay Bridge to Yerba Buena Island. The detour encompasses three main structures, the East Tie-In (ETI) to the existing bridge, the West Tie-In (WTI) to Yerba Buena Island and the Viaduct structure between the two tie ins. The contract was issued as a performance based contract with the contractor responsible for providing the design of the structure based on specified design criteria.

Two separate Department strategy memorandums, dated December 14, 2006 and December 25, 2006 and both approved by Tony Anziano – Toll Bridge Program Manager, Richard land – Chief Engineer and subsequently by the Toll Bridge Program Oversight Committee (TBPOC), recommended that the Department assume the design responsibility for the ETI and WTI structures and recommended the advance construction of foundation work for the Yerba Buena Island Transition Structure (YBITS) to be added to this contract. The implementation of these strategies has led to the extension of the contract through the end of 2010 approximately 5 years past the original contract completion date.

The original contract provided for photo surveys and vibration monitoring of adjacent USCG facilities under Contract Bid Items No. 3, Photo Survey of Existing Buildings and No. 5, Vibration Monitoring. The implementation of the strategies discussed above both delayed and added significant scopes of work to be performed under the photo survey and vibration monitoring due to the added construction of the foundations for Bent W5 through Bent W7 of the YBITS contract. Accordingly, the original Change Order No. 118 along with Supplement No. 1 added this additional scope and specified that the work would be performed at force account.

The work at Bent W5 and Bent W7 is now anticipated to extend into the summer of 2010 and it is anticipated that additional funding will be necessary to provide for the remaining vibration monitoring.

The work shall be compensated as extra work at force account at an estimated cost of $100,000.00 which shall be financed from the contract contingency funds. A cost analysis is on file.

No adjustment of contract time is warranted as the change will not affect the controlling operation.

Maintenance concurrence is not required as the work doesn't affect any permanent roadway features.

ADA Notice: For individuals with sensory disabilities, this document is available in alternate formats. For information call: (916) 654-6410 or TDD (916) 654-3880 or write Records and Forms Management, 1120 N Street, MS-89, Sacramento, CA 95814.

CONCURRED BY:		
Construction Engineer:	for Bill Casey, Resident Engineer	Date 2/11/10
Bridge Engineer:		Date
Project Engineer:	Minh B. Nguyen, PE	Date 2/11/10
Project Manager:	Alec Melkonians	Date 2/10/10
FHWA Rep.:		Date
Environmental:		Date
Other (specify):	Jeannie Balderramos	Date 2-10-10
Other (specify):		Date
District Prior Approval By:		Date
HQ (Issue Approve) By:	Larry Salhaney, HQ CCO Engine	Date 2/16/10
Resident Engineer's Signature:	Deanna Viereck	Date 2/11/10

ESTIMATE OF COST

	THIS REQUEST	TOTAL TO DATE
ITEMS	$0.00	($50,000.00)
FORCE ACCOUNT	$100,000.00	$270,000.00
AGREED PRICE	$0.00	$0.00
ADJUSTMENT	$0.00	$20,050.00
TOTAL	$100,000.00	$240,050.00

FEDERAL PARTICIPATION

☐ PARTICIPATING ☐ PARTICIPATING IN PART ☑ NONE
☐ NON-PARTICIPATING (MAINTENANCE) ☐ NON-PARTICIPATING

FEDERAL SEGREGATION (if more than one Funding Source or P.I.P. type)
☐ CCO FUNDED PER CONTRACT ☐ CCO FUNDED AS FOLLOWS

FEDERAL FUNDING SOURCE	PERCENT

ADA Notice: For individuals with sensory disabilities, this document is available in alternate formats. For information call: (916) 654-6410 or TDD (916) 654-3880 or write Records and Forms Management, 1120 N Street, MS-89, Sacramento, CA 95814.

STATE OF CALIFORNIA - DEPARTMENT OF TRANSPORTATION

CONTRACT CHANGE ORDER

Change Requested by: Engineer

CCO: 118	Suppl. No. 4	Contract No. 04 - 0120R4	Road SF-80-12.6/13.2	FED. AID LOC.:

To: CC MYERS INC

You are directed to make the following changes from the plans and specifications or do the following described work not included in the plans and specifications for this contract. ***NOTE: This change order is not effective until approved by the Engineer.***

Description of work to be done, estimate of quantities and prices to be paid. (Segregate between additional work at contract price, agreed price and force account.) Unless otherwise stated, rates for rental of equipment cover only such time as equipment is actually used and no allowance will be made for idle time. This last percentage shown is the net accumulated increase or decrease from the original quantity in the Engineer's Estimate.

Extra Work at Force Account:

Provide additional funds for the work specified under the original Change Order No. 118 and Change Order No. 118, Supplement No. 1.

Estimated cost of Extra Work at Force Account $100,000.00

Estimated Cost: Increase ☑ Decrease ☐ **$100,000.00**

By reason of this order the time of completion will be adjusted as follows: 0 days

Submitted by

Signature Jeannie Balderrama	Resident Engineer JEANNIE BALDERRAMOS	Date 4-27-10

Approval Recommended by

Signature Deanna Vilcheck	Area Construction Manager DEANNA VILCHECK	Date 4/27/10

Engineer Approval by

Signature Deanna Vilcheck	Area Construction Manager DEANNA VILCHECK	Date 4/27/10

We the undersigned contractor, have given careful consideration to the change proposed and agree, if this proposal is approved, that we will provide all equipment, furnish the materials, except as may otherwise be noted above, and perform all services necessary for the work above specified, and will accept as full payment therefor the prices shown above.

NOTE: If you, the contractor, do not sign acceptance of this order, your attention is directed to the requirements of the specifications as to proceeding with the ordered work and filing a written protest within the time therein specified.

Contractor Acceptance by

Signature	(Print name and title)	Date

TATE OF CALIFORNIA - DEPARTMENT OF TRANSPORTATION

CONTRACT CHANGE ORDER

Change Requested by: Engineer

CCO: 118	Suppl. No. 5	Contract No. 04 - 0120R4	Road SF-80-12.6/13.2	FED. AID LOC.:

To: CC MYERS INC

You are directed to make the following changes from the plans and specifications or do the following described work not included in the plans and specifications for this contract. ***NOTE: This change order is not effective until approved by the Engineer.***

Description of work to be done, estimate of quantities and prices to be paid. (Segregate between additional work at contract price, agreed price and force account.) Unless otherwise stated, rates for rental of equipment cover only such time as equipment is actually used and no allowance will be made for idle time. This last percentage shown is the net accumulated increase or decrease from the original quantity in the Engineer's Estimate.

Extra Work at Force Account:

Provide additional funds for the work specified under the original Change Order No. 118 and Change Order No. 118, Supplement No. 1.

Estimated cost of Extra Work at Force Account $60,000.00

Estimated Cost: Increase ☑ Decrease ☐ **$60,000.00**

By reason of this order the time of completion will be adjusted as follows: 0 days

Submitted by

Signature	Resident Engineer	Date
J Balderrama	JEANNIE BALDERRAMOS	9-30-10

Approval Recommended by

Signature	Area Construction Manager	Date
Michael Fraser	for DEANNA VILCHECK	10-1-10

Engineer Approval by

Signature	Area Construction Manager	Date
Deanna Vilcheck	DEANNA VILCHECK	10/7/10

We the undersigned contractor, have given careful consideration to the change proposed and agree, if this proposal is approved, that we will provide all equipment, furnish the materials, except as may otherwise be noted above, and perform all services necessary for the work above specified, and will accept as full payment therefor the prices shown above.

NOTE: If you, the contractor, do not sign acceptance of this order, your attention is directed to the requirements of the specifications as to proceeding with the ordered work and filing a written protest within the time therein specified.

Contractor Acceptance by

Signature	(Print name and title)	Date
NOT REQUIRED		

CONTRACT CHANGE ORDER

Change Requested by: Engineer

CCO 119 | Suppl. No. 0 | Contract No. 04 - 0120R4 | Road SF-80-12.6/13.2 | FED. AID LOC.: ACBRIM-080-1(097)N

To: CC MYERS INC

You are directed to make the following changes from the plans and specifications or do the following described work not included in the plans and specifications for this contract. ***NOTE: This change order is not effective until approved by the Engineer.***

Description of work to be done, estimate of quantities and prices to be paid. (Segregate between additional work at contract price, agreed price and force account.) Unless otherwise stated, rates for rental of equipment cover only such time as equipment is actually used and no allowance will be made for idle time. This last percentage shown is the net accumulated increase or decrease from the original quantity in the Engineer's Estimate.

As of March 21, 2008, all costs associated with the implementation of the Contractor's Storm Water Pollution Prevention Plan (SWPPP) shall be compensated on a force account basis.

No additional contract item payments associated with the Contractor's Storm Water Pollution Prevention Plan shall be made for any work performed after March 20, 2008. No additional compensation concerning the agreed unit prices provided under Contract Change Order No. 45, including Supplement No. 1, shall be made for any work performed after March 20, 2008.

Estimate of Decrease in Contract Item at Contract Price:

Item No. 16: TEMPORARY SOIL STABILIZER					
-15036 M2	(–84.00%)	$1.00 /M2	=	–$15,036.00	(–84.00%)
Item No. 18: TEMPORARY PERIMETER CONTROL BARRIER					
-160 M	(–100.00%)	$165.00 /M	=	–$26,400.00	(–100.00%)
Item No. 19: TEMPORARY CONCRETE WASHOUT FACILITY					
-1 LS	(–100.00%)	$15,000.00 /LS	=	–$15,000.00	(–100.00%)
Item No. 20: TEMPORARY CONSTRUCTION ENTRANCE					
-6 EA	(–100.00%)	$3,000.00 /EA	=	–$18,000.00	(–100.00%)
Item No. 22: TEMPORARY DRAINAGE INLET PROTECTION					
-15 EA	(–35.71%)	$300.00 /EA	=	–$4,500.00	(–35.71%)

In accordance with Section 4-1.03B(3), "Eliminated Items," of the Standard Specifications, the adjustments due to the elimination of Item #18, Temporary Perimeter Control Barrier, and Item #20, Temporary Construction Entrance, are zero.

There will be no adjustment for the units of work on Item No. 16, Temporary Soil Stabilizer and Item No. 22, Temporary Drainage Inlet Protection due to the decrease in excess of 25% of the Engineer's Estimate in accordance with Section 4-1.03B(2), "Decreases of More Than 25 Percent," of the Standard Specifications.

Estimated total cost for Decrease in Contract Item.....($78,936.00)

Extra Work at Force Account:

Perform the following work in accordance with Section 10-1.02, "Water Pollution Control" of the Contract Special Provisions and as determined by the Engineer.

1. Install additional construction site Best Management Practices (BMPs) in accordance with the Storm Water Pollution Prevention Plan, including amendments approved to date.

2. Maintain construction site Best Management Practices (BMPs) as part of the Storm Water Pollution Prevention Plan, including amendments approved to date.

Estimated cost of Extra Work at Force Account $700,000.00

CONTRACT CHANGE ORDER

Change Requested by: Engineer

CCO 119	Suppl. No. 0	Contract No. 04 - 0120R4	Road SF-80-12.6/13.2	FED. AID LOC.: ACBRIM-080-1(097)N

Extra Work at Unit Price:

SWPPP Amendments, if applicable, shall be prepared and submitted when there is change in construction activities or operations for State's review and approval.

For this work, the Contractor shall receive and accept $300.00 per SWPPP amendment. This sum constitutes full and complete compensation, including all markups by reason of this change.

Estimated cost of Extra Work at Agreed Unit Price $10,000.00

Adjustment of Compensation at Lump Sum:

Compensate the Contractor for the costs incurred due to the elimination of work on Item #19, Temporary Concrete Washout Facility, pursuant to Section 4-1.03B(3), "Decreases of More Than 25 Percent," of the Standard Specifications.

For this work, the Contractor agrees to a lump sum payment of $ 7,875.00. This sum constitutes full and complete compensation, including all markups for this change.

Total cost of Adjustment of Compensation at Lump Sum $7,875.00

Estimated Cost: **Increase** ☑ **Decrease** ☐ **$638,939.00**

By reason of this order the time of completion will be adjusted as follows: 0 days

Submitted by

Signature	Resident Engineer	Date
	BILL CASEY	3-7-08

Approval Recommended by

Signature	Area Construction Manager	Date
	DENNIS TURCHON	3/7/08

Engineer Approval by

Signature	Area Construction Manager	Date
	DENNIS TURCHON	4/17/08

We the undersigned contractor, have given careful consideration to the change proposed and agree, if this proposal is approved, that we will provide all equipment, furnish the materials, except as may otherwise be noted above, and perform all services necessary for the work above specified, and will accept as full payment therefor the prices shown above.

NOTE: If you, the contractor, do not sign acceptance of this order, your attention is directed to the requirements of the specifications as to proceeding with the ordered work and filing a written protest within the time therein specified.

Contractor Acceptance by

Signature	(Print name and title)	Date
	DANIEL E Hamick, PRESIDENT	4/14/08

STATE OF CALIFORNIA - DEPARTMENT OF TRANSPORTATION

RECEIVED

CONTRACT CHANGE ORDER MEMORANDUM

DATE: 2/25/2008

TO: MIKE FORNER / DENNIS TURCHON	FILE: E.A. 04 - 0120R4 007647 JUN 20 08
	CO-RTE-PM SF-80-12.6/13.2
FROM: BILL CASEY	FED. NO. ACBRIM-080-1(097)N
CCO#: 119 SUPPLEMENT#: 0 Category Code: AXZZ	CONTINGENCY BALANCE (incl. this change) $73,298,284.82
COST: $638,939.00 INCREASE ☑ DECREASE ☐	HEADQUARTERS APPROVAL REQUIRED? ☑ YES ☐ NO
SUPPLEMENTAL FUNDS PROVIDED: $0.00	IS THIS REQUEST IN ACCORDANCE WITH ENVIRONMENTAL DOCUMENTS? ☑ YES ☐ NO
CCO DESCRIPTION: Project Wide SWPPP	PROJECT DESCRIPTION: CONSTRUCT ROUTE 80 TEMP BYPASS STRUCTURE

Original Contract Time:	Time Adj. This Change:	Previously Approved CCO Time Adjustments:	Percentage Time Adjusted: (including this change)	Total # of Unreconciled Deferred Time CCO(s): (including this change)
475 Day(s)	0 Day(s)	1195 Day(s)	252 %	7

THIS CHANGE ORDER PROVIDES FOR:

Compensation for future water pollution control costs incurred due to Department caused delays to the contract.

The Temporary Bypass Structure (TBS), encompasses three main structures, the East Tie-In (ETI) to the existing bridge, the West Tie-In (WTI) to Yerba Buena Island and the Viaduct structure between the two tie ins. The contract was bid, with an A + B specification, to be completed in 475 calendar days and was awarded in March of 2004. The anticipated completion was the summer of 2005.

Two separate Department strategy memorandums, issued on December 14, 2006 and December 25, 2006, and approved by Tony Anziano - Toll Bridge Program Manager, Richard Land - Chief Engineer, and the Toll Bridge Program Oversight Committee (TBPOC), revised the project completion date to December 2009 and resulted in the following changes to the project scope:

1) The retrofit of a 350-foot section of the concrete deck approaching the Yerba Buena Tunnel was re-sequenced to be performed within the TBS project as opposed to after the traffic switch onto the new east span.
2) The responsibility for the design of both the WTI and ETI structures were taken from the contractor and assumed by the Department.
3) Numerous design enhancements were ordered to the Viaduct in order to create a stand-alone structure.
4) Significant portions of the foundation and substructure work of the future Yerba Buena Island Transition Structure (YBITS) contract were incorporated into this project.

To date, the Contractor's implementation of their Storm Water Pollution Prevention Plan (SWPPP) has been compensated through various combinations of lump sum and unit price contract bid items, agreed change order unit prices and force account payments. Due to the extended contract duration and to facilitate a more efficient payment method for the SWPPP work performed, compensation for all SWPPP work performed after March 21, 2008 shall be paid on a force account basis. This change provides for this force account compensation.

The change order also eliminates the remaining contract bid items pertaining to SWPPP for work not performed.

The elimination of the contract items shall be performed by decreasing the appropriate contract items at contract prices for a net savings of $78,936.00 and a lump sum price of $ 7,875.00 due to the elimination of Item No. 19. Compensation for all SWPPP work as of March 21, 2008 shall be paid as extra work at force account at an estimated cost of $700,000.00 and a unit price of $300.00 for each SWPPP Amendment for an estimated cost of $10,000.00.

The net change order cost of $638,939.00 shall be financed from the contract's contingency funds. A cost analysis is on file.

No adjustment of contract time is warranted, as the work will not affect the controlling operation.

This change was concurred by Alec Melkonians - Asst. Project Manager and Hong Wong - Project Engineer.

Maintenance concurrence is not required, as the SWPPP work doesn't affect any permanent roadway features.

ADA Notice: For individuals with sensory disabilities, this document is available in alternate formats. For information call: (916) 654-6410 or TDD (916) 654-3880 or write Records and Forms Management, 1120 N Street, MS-89, Sacramento, CA 95814.

CONCURRED BY:			
Construction Engineer:	Raoul Maltez, Senior TE	Date	3/14/08
Bridge Engineer:		Date	
Project Engineer:	Hong Wong, PE	Date	3/4/08
Project Manager:	Alec Melkonians	Date	3/5/08
FHWA Rep.:		Date	
Environmental:		Date	
Other (specify):	Robert Kobal, HQ Asst.Const.Coor	Date	3/7/08
Other (specify):		Date	
District Prior Approval By:		Date	
HQ (Issue Approve) By:	Ken Darby, HQ CCO Engineer	Date	
Resident Engineer's Signature:		Date	3-17-08

ESTIMATE OF COST

	THIS REQUEST	TOTAL TO DATE
ITEMS	($78,936.00)	($78,936.00)
FORCE ACCOUNT	$700,000.00	$700,000.00
AGREED PRICE	$10,000.00	$10,000.00
ADJUSTMENT	$7,875.00	$7,875.00
TOTAL	$638,939.00	$638,939.00

FEDERAL PARTICIPATION

☐ PARTICIPATING ☐ PARTICIPATING IN PART ☐ NONE
☐ NON-PARTICIPATING (MAINTENANCE) ☑ NON-PARTICIPATING

FEDERAL SEGREGATION (if more than one Funding Source or P.I.P. type)
☑ CCO FUNDED PER CONTRACT ☐ CCO FUNDED AS FOLLOWS

FEDERAL FUNDING SOURCE	PERCENT

ADA Notice: For individuals with sensory disabilities, this document is available in alternate formats. For information call: (916) 654-6410 or TDD (916) 654-3880 or write

STATE OF CALIFORNIA - DEPARTMENT OF TRANSPORTATION

CONTRACT CHANGE ORDER

Change Requested by: Engineer

CCO 119	Suppl. No. 1	Contract No. 04 - 0120R4	Road SF-80-12.6/13.2	FED. AID LOC.: ACBRIM-080-1(097)N

To: **CC MYERS INC**

You are directed to make the following changes from the plans and specifications or do the following described work not included in the plans and specifications for this contract. ***NOTE: This change order is not effective until approved by the Engineer.***

Description of work to be done, estimate of quantities and prices to be paid. (Segregate between additional work at contract price, agreed price and force account.) Unless otherwise stated, rates for rental of equipment cover only such time as equipment is actually used and no allowance will be made for idle time. This last percentage shown is the net accumulated increase or decrease from the original quantity in the Engineer's Estimate.

Extra Work at Force Account:

Provide additional funds for performing the following work in accordance with Section 10-1.02, "Water Pollution Control" of the Contract Special Provisions and as authorized by the Engineer.

1. Install additional construction Best Management Practices (BMPs) in accordance with the Storm Water Pollution Prevention Plan, including amendments approved to date.

2. Maintain construction site Best Management Practices (BMPs) as part of the Storm Water Pollution Prevention Plan, including amendments approved to date.

Estimated Cost of Extra Work at Force Account $300,000.00

RECEIVED
SEP 28 2009
01104

Estimated Cost: Increase ☑ Decrease ☐ **$300,000.00**

By reason of this order the time of completion will be adjusted as follows: 0 days

Submitted by

Signature	Resident Engineer	Date
	BILL CASEY	9-30-09

Approval Recommended by

Signature	Area Construction Manager	Date
Deanna Vilcheck	DEANNA VILCHECK	8/31/09

Engineer Approval by

Signature	Area Construction Manager	Date
Deanna Vilcheck	DEANNA VILCHECK	9/3/09

We the undersigned contractor, have given careful consideration to the change proposed and agree, if this proposal is approved, that we will provide all equipment, furnish the materials, except as may otherwise be noted above, and perform all services necessary for the work above specified, and will accept as full payment therefor the prices shown above.

NOTE: If you, the contractor, do not sign acceptance of this order, your attention is directed to the requirements of the specifications as to proceeding with the ordered work and filing a written protest within the time therein specified.

Contractor Acceptance by

Signature	(Print name and title)	Date
N/A	N/A	N/A

STATE OF CALIFORNIA - DEPARTMENT OF TRANSPORTATION

CONTRACT CHANGE ORDER MEMORANDUM

TO: MIKE FORNER / DEANNA VILCHECK	FILE: E.A. 04 - 0120R4
	CO-RTE-PM SF-80-12.6/13.2
FROM: BILL CASEY	FED. NO. ACBRIM-080-1(097)N
CCO#: **119** SUPPLEMENT#: **1** Category Code: **CXXX**	CONTINGENCY BALANCE (incl. this change) **$17,342,395.59**
COST: **$300,000.00** INCREASE ☑ DECREASE ☐	HEADQUARTERS APPROVAL REQUIRED? ☑ YES ☐ NO
SUPPLEMENTAL FUNDS PROVIDED: **$0.00**	IS THIS REQUEST IN ACCORDANCE WITH ENVIRONMENTAL DOCUMENTS? ☑ YES ☐ NO
CCO DESCRIPTION: SWPPP Supplemental Funds Request	**PROJECT DESCRIPTION:** CONSTRUCT ROUTE 80 TEMP BYPASS STRUCTURE

Original Contract Time:	Time Adj. This Change:	Previously Approved CCO Time Adjustments:	Percentage Time Adjusted: (including this change)	Total # of Unreconciled Deferred Time CCO(s): (including this change)
475 Day(s)	**0** Day(s)	**1195** Day(s)	**252** %	**7**

THIS CHANGE ORDER PROVIDES FOR:

additional funds for compensating the Contractor for continuation of their Storm Water Pollution Prevention Plan (SWPPP).

This project, the Yerba Buena Island Detour (YBID), calls for the construction of a temporary detour for both eastbound and westbound I-80 traffic that will allow for the tie in of the new east span of the San Francisco Oakland Bay Bridge to Yerba Buena Island. The YBID encompasses three main structures, the East Tie-In to the existing bridge, the West Tie-In (WTI) to Yerba Buena Island, and the Viaduct structure between the two tie ins. The contract was awarded as a performance-based project with the contractor responsible for meeting the design criteria specified in the contract.

Two separate Department strategy memorandums, dated December 14, 2006 and December 25, 2006, approved by Tony Anziano - Toll Bridge Program Manager and Richard Land - Chief Engineer, recommended that the Department assume responsibility for the designs of the East Tie-In (ETI) and West Tie-In (WTI) portions of this contract, and incorporated seismic retrofit work of the permanent Yerba Buena Island Transition Structure (YBITS) onto this project. The approval of these strategy memorandums extended the project completion date approximately 5 years.

Previously, the Contractor's implementation of their Storm Water Pollution Prevention Plan has been compensated through various combinations of lump sum and unit price contract bid items, agreed change order unit prices, and force account payments. Due to the extended contract duration and to facilitate a more efficient payment method for the SWPPP work performed, Contract Change Order No. 119 was executed to provide compensation for all SWPPP work on a force account basis.

To date, all funds have been depleted and an additional $300,000.00 is necessary for the continuation of the Contractor's Storm Water Pollution Prevention Plan. Compensation shall be financed from the contract's contingency funds. A cost estimate is on file in the project records.

The Contractor's signature is not required for additional funds for Extra Work at Force Account change orders. Therefore this change order is being issued unilaterally.

No adjustment of contract time is warranted, as the work will not affect the controlling operation.

Maintenance concurrence is not required, as the SWPPP work doesn't affect any permanent roadway features.

This change was concurred with by Alec Melkonians - Asst. Project Manager and Hong Wong - Project Engineer.

ADA Notice: For individuals with sensory disabilities, this document is available in alternate formats. For information call: (916) 654-6410 or TDD (916) 654-3880 or write Records and Forms Management, 1120 N Street, MS-89, Sacramento, CA 95814.

CONTRACT CHANGE ORDER MEMORANDUM

CONCURRED BY:		
Construction Engineer:	Jeannie Balderramos JB	Date 8-24-09
Bridge Engineer:		Date
Project Engineer:	Hong Wong, PE	Date 8/18/09
Project Manager:	Alec Melkonians	Date 8/18/09
FHWA Rep.:		Date
Environmental:		Date
Other (specify):		Date
Other (specify):		Date
District Prior Approval By:		Date
HQ (Issue .Approve) By:	Bob Molera, HQ CCO Engineer	Date 9/2/09
Resident Engineer's Signature:		Date
		8-30-09

ESTIMATE OF COST

	THIS REQUEST	TOTAL TO DATE
ITEMS	$0.00	($78,936.00)
FORCE ACCOUNT	$300,000.00	$1,000,000.00
AGREED PRICE	$0.00	$10,000.00
ADJUSTMENT	$0.00	$7,875.00
TOTAL	$300,000.00	$938,939.00

FEDERAL PARTICIPATION

☐ PARTICIPATING ☐ PARTICIPATING IN PART ☑ NONE
☐ NON-PARTICIPATING (MAINTENANCE) ☐ NON-PARTICIPATING

FEDERAL SEGREGATION (if more than one Funding Source or P.I.P. type)
☐ CCO FUNDED PER CONTRACT ☐ CCO FUNDED AS FOLLOWS

FEDERAL FUNDING SOURCE	PERCENT

ADA Notice: For individuals with sensory disabilities, this document is available in alternate formats. For information call: (916) 654-6410 or TDD (916) 654-3880 or write Records and Forms Management, 1120 N Street, MS-89, Sacramento, CA 95814.

STATE OF CALIFORNIA - DEPARTMENT OF TRANSPORTATION

CONTRACT CHANGE ORDER

Change Requested by: Engineer

CCO 119	Suppl. No. 2	Contract No. 04 - 0120R4	Road SF-80-12.6/13.2	FED. AID LOC.:

To: CC MYERS INC

You are directed to make the following changes from the plans and specifications or do the following described work not included in the plans and specifications for this contract. ***NOTE: This change order is not effective until approved by the Engineer.***

Description of work to be done, estimate of quantities and prices to be paid. (Segregate between additional work at contract price, agreed price and force account.) Unless otherwise stated, rates for rental of equipment cover only such time as equipment is actually used and no allowance will be made for idle time. This last percentage shown is the net accumulated increase or decrease from the original quantity in the Engineer's Estimate.

Extra Work at Force Account:

Provide additional funds.

Estimated Cost of Extra Work at Force Account $850,000.00

RECEIVED
DEC 14 2009
10

Estimated Cost: Increase ☑ Decrease ☐ $850,000.00

By reason of this order the time of completion will be adjusted as follows: 0 days

Submitted by

Signature	Resident Engineer	Date
	BILL CASEY	12-11-09

Approval Recommended by

Signature	SFOBB Construction Manager	Date
Mike Forner	MIKE FORNER	12/14/09

Engineer Approval by

Signature	SFOBB Construction Manager	Date
Mike Forner for	MIKE FORNER	12/17/09

We the undersigned contractor, have given careful consideration to the change proposed and agree, if this proposal is approved, that we will provide all equipment, furnish the materials, except as may otherwise be noted above, and perform all services necessary for the work above specified, and will accept as full payment therefor the prices shown above.

NOTE: If you, the contractor, do not sign acceptance of this order, your attention is directed to the requirements of the specifications as to proceeding with the ordered work and filing a written protest within the time therein specified.

Contractor Acceptance by

Signature	(Print name and title)	Date
N/A	N/A	N/A

STATE OF CALIFORNIA - DEPARTMENT OF TRANSPORTATION

CONTRACT CHANGE ORDER MEMORANDUM

TO: MIKE FORNER / DEANNA VILCHECK	FILE: E.A. 04 - 0120R4
	CO-RTE-PM SF-80-12.6/13.2
FROM: BILL CASEY	FED. NO.
CCO#: **119** SUPPLEMENT#: **2** Category Code: **CXXX**	CONTINGENCY BALANCE (incl. this change) **$45,286,741.59**
COST: **$850,000.00** INCREASE ☑ DECREASE ☐	HEADQUARTERS APPROVAL REQUIRED? ☑ YES ☐ NO
SUPPLEMENTAL FUNDS PROVIDED: **$0.00**	IS THIS REQUEST IN ACCORDANCE WITH ENVIRONMENTAL DOCUMENTS? ☑ YES ☐ NO
CCO DESCRIPTION: SWPPP Additional Funds Request	**PROJECT DESCRIPTION:** CONSTRUCT ROUTE 80 TEMP BYPASS STRUCTURE

Original Contract Time:	Time Adj. This Change:	Previously Approved CCO Time Adjustments:	Percentage Time Adjusted: (including this change)	Total # of Unreconciled Deferred Time CCO(s): (including this change)
475 Day(s)	**0** Day(s)	**1660** Day(s)	**349** %	**0**

THIS CHANGE ORDER PROVIDES FOR:

Additional funding for installing and maintaining Best Management Practices in accordance with Section 10-1.02, "Water Pollution Control" of the contract Special Provisions.

This project was awarded in March 2004 to construct a detour that will allow for the tie in of the new east span of the San Francisco Oakland Bay Bridge to Yerba Buena Island. The detour encompasses three main structures, the East Tie-In to the existing bridge, the West Tie-In (WTI) to Yerba Buena Island and the Viaduct structure between the two tie ins. The original contract completion date was July 2005.

Two separate Department strategy memorandums issued on December 14, 2006 entitled 'Strategy for South-South Detour Contract Completion' and December 25, 2006 entitled 'Recommendation to Construct Select Yerba Buena Island Transition Structure Foundations by Contract Change Order' were approved by Tony Anziano - Toll Bridge Program Manager, Richard Land - Chief Engineer, and the Toll Bridge Program Oversight Committee (TBPOC), recommended that the Department assume responsibility for the designs of the East Tie-In (ETI) and West Tie-In (WTI) portions of this contract, and incorporated seismic retrofit work of the permanent Yerba Buena Island Transition Structure (YBITS) onto this project. The approval of these strategy memorandums extended the project completion date approximately 5 years.

Previously, the Contractor's implementation of their Storm Water Pollution Prevention Plan has been compensated through various combinations of lump sum and unit price contract bid items, agreed change order unit prices, and force account payments. Due to the extended contract duration and to facilitate a more efficient payment method for the SWPPP work performed, Contract Change Order No. 119 was executed to provide compensation for all SWPPP work on a force account basis.

The original Change Order No. 119 provided for the contractor to be compensated on a force account basis to install and maintain Best Management Practices (BMP's) in accordance with their approved Storm Water Pollution Prevention Plan. Supplement No. 1 to Change Order No. 119 provided additional funds for this work to extend through the 2009/2010 winter. Preparations for the coming winter have now been performed and the scope and cost of this work has exceeded the original estimate.

It is now anticipated that additional funding will be required for the contractor to maintain their BMP's through the 2009/2010 winter. With the contract time of completion now extended into December of 2010, additional funding is also anticipated to be required to install and maintain BMP's into the 2010/2011 winter and to leave the worksite in a state consistent with the BMP's at the end of the contract.

The work shall be compensated as extra work at force account at an estimated cost of $850,000.00 which shall be financed from the contract contingency funds. A cost analysis is on file.

The Contractor's signature is not required for additional funds for Extra Work at Force Account change orders. Therefore this change order is being issued unilaterally.

No adjustment of contract time is warranted as the change will not affect the controlling operation.

ADA Notice: For individuals with sensory disabilities, this document is available in alternate formats. For information call: (916) 654-6410 or TDD (916) 654-3880 or write Records and Forms Management, 1120 N Street, MS-89, Sacramento, CA 95814.

This change was concurred with by Alec Melkonians - Asst. Project Manager and Minh B. Nguyen - Project Engineer.

Maintenance concurrence is not required as the work doesn't affect any permanent roadway features.

CONCURRED BY:		
Construction Engineer:	Bill Casey, Resident Engineer	Date 12-11-09
Bridge Engineer:		Date
Project Engineer:	Minh B. Nguyen, PE	Date 12/7/09
Project Manager:	Alec Melkonians	Date 12/6/09
FHWA Rep.:		Date
Environmental:		Date
Other (specify):		Date
Other (specify):		Date
District Prior Approval By:		Date
HQ (Issue Approve) By:	Bob Molera, HQ CCO Engineer	Date 12-17-09
Resident Engineer's Signature:		Date

12-11-09

ESTIMATE OF COST		
	THIS REQUEST	TOTAL TO DATE
ITEMS	$0.00	($78,936.00)
FORCE ACCOUNT	$850,000.00	$1,850,000.00
AGREED PRICE	$0.00	$10,000.00
ADJUSTMENT	$0.00	$7,875.00
TOTAL	$850,000.00	$1,788,939.00

FEDERAL PARTICIPATION

☐ PARTICIPATING ☐ PARTICIPATING IN PART ☑ NONE
☐ NON-PARTICIPATING (MAINTENANCE) ☐ NON-PARTICIPATING

FEDERAL SEGREGATION (if more than one Funding Source or P.I.P. type)
☐ CCO FUNDED PER CONTRACT ☐ CCO FUNDED AS FOLLOWS

FEDERAL FUNDING SOURCE	PERCENT

ADA Notice: For individuals with sensory disabilities, this document is available in alternate formats. For information call: (916) 654-6410 or TDD (916) 654-3880 or write Records and Forms Management, 1120 N Street, MS-89, Sacramento, CA 95814.

STATE OF CALIFORNIA - DEPARTMENT OF TRANSPORTATION

CONTRACT CHANGE ORDER

Change Requested by: Engineer

CCO: 119	Suppl. No. 3	Contract No. 04 - 0120R4	Road SF-80-12.6/13.2	FED. AID LOC.:

To: **CC MYERS INC**

You are directed to make the following changes from the plans and specifications or do the following described work not included in the plans and specifications for this contract. ***NOTE: This change order is not effective until approved by the Engineer.***

Description of work to be done, estimate of quantities and prices to be paid. (Segregate between additional work at contract price, agreed price and force account.) Unless otherwise stated, rates for rental of equipment cover only such time as equipment is actually used and no allowance will be made for idle time. This last percentage shown is the net accumulated increase or decrease from the original quantity in the Engineer's Estimate.

Extra Work at Force Account:

Provide additional funds for the work specified under the original Change Order No. 119.

Estimated cost of Extra Work at Force Account $600,000.00

Estimated Cost: **Increase** ☑ **Decrease** ☐ **$600,000.00**

By reason of this order the time of completion will be adjusted as follows: 0 days

Signature Jeannie Balderramos	**Resident Engineer** JEANNIE BALDERRAMOS	**Date** 4-26-10
Signature Deanna Vilcheck	**Area Construction Manager** DEANNA VILCHECK	**Date** 4/29/10
Signature Mike Forner	**SFOBB Construction Manager** MIKE FORNER	**Date** 5/20/10

We the undersigned contractor, have given careful consideration to the change proposed and agree, if this proposal is approved, that we will provide all equipment, furnish the materials, except as may otherwise be noted above, and perform all services necessary for the work above specified, and will accept as full payment therefor the prices shown above.

NOTE: If you, the contractor, do not sign acceptance of this order, your attention is directed to the requirements of the specifications as to proceeding with the ordered work and filing a written protest within the time therein specified.

Signature NOT REQUIRED	**(Print name and title)**	**Date**

STATE OF CALIFORNIA - DEPARTMENT OF TRANSPORTATION

CONTRACT CHANGE ORDER MEMORANDUM

DATE: 4/8/2010 Page 1 of 1

TO: MIKE FORNER / DEANNA VILCHECK	FILE: E.A. 04 - 0120R4
FROM: JEANNIE BALDERRAMOS	CO-RTE-PM SF-80-12.6/13.2
	FED. NO.
CCO#: 119 SUPPLEMENT#: 3 Category Code: CXXX	CONTINGENCY BALANCE (incl. this change) $36,037,244.59
COST: $600,000.00 INCREASE ☑ DECREASE ☐	HEADQUARTERS APPROVAL REQUIRED? ☑ YES ☐ NO
SUPPLEMENTAL FUNDS PROVIDED: $0.00	IS THIS REQUEST IN ACCORDANCE WITH ENVIRONMENTAL DOCUMENTS? ☑ YES ☐ NO
CCO DESCRIPTION: SWPPP Additional Funds Request	**PROJECT DESCRIPTION:** CONSTRUCT ROUTE 80 TEMP BYPASS STRUCTURE

Original Contract Time:	Time Adj. This Change:	Previously Approved CCO Time Adjustments:	Percentage Time Adjusted: (including this change)	Total # of Unreconciled Deferred Time CCO(s): (including this change)
475 Day(s)	0 Day(s)	1660 Day(s)	349 %	0

THIS CHANGE ORDER PROVIDES FOR:

Additional funding for installing and maintaining Best Management Practices in accordance with Section 10-1.02, "Water Pollution Control" of the contract Special Provisions.

The original Change Order No. 119 provided for the contractor to be compensation on a force account basis to install and maintain Best Management Practices (BMP's) in accordance with their approved Storm Water Pollution Prevention Plan. Supplement No. 1 and Supplement No. 2 to Change Order No. 119 provided additional funds for this work to extend through the 2009/2010 winter and into the 2010/2011 winter.

Due to the extended duration and severity of the 2009/2010 winter, the cost of maintaining the project BMP's has exceeded the previous funding estimate. The contract has also submitted outstanding billings for past work which were not recognized previously.TBPOC approved additional funding for this change order on May 6, 2010.

The work shall be compensated as extra work at force account at an estimated cost of $600,000 which shall be financed from the contract contingency funds. Total cost of this change is $2,388,939.00. A cost analysis is on file.

It is anticipated that additional funding will be required for the contractor to maintain their BMP's into the 2010/2011 winter and to leave the worksite in a state consistent with the BMP's at the end of the contract in December of 2010.

No adjustment of contract time is warranted as the change will not affect the controlling operation.

This change was concurred with by Ken Terpstra - Project Manager, and Jaime Gutierrez - Project Engineer.

Maintenance concurrence is not required as the work doesn't affect any permanent roadway features.

CONCURRED BY:			
Construction Engineer:	Jeannie Balderramos, RE JB	Date	5-20-10
Bridge Engineer:		Date	
Project Engineer:	Jaime Gutierrez, PE	Date	5/20/10
Project Manager:	Ken Terpstra, PM	Date	5/19/10
FHWA Rep.:		Date	
Environmental:		Date	
Other (specify):		Date	
Other (specify):		Date	
District Prior Approval By:		Date	
HQ (Issue Approve) By:	Larry Salhaney, HQ CCO Engine	Date	5/5/10
Resident Engineer's Signature:	Jeannie Balderramos	Date	5-20-10

ESTIMATE OF COST		
	THIS REQUEST	TOTAL TO DATE
ITEMS	$0.00	($78,936.00)
FORCE ACCOUNT	$600,000.00	$2,450,000.00
AGREED PRICE	$0.00	$10,000.00
ADJUSTMENT	$0.00	$7,875.00
TOTAL	$600,000.00	$2,388,939.00

FEDERAL PARTICIPATION

☐ PARTICIPATING ☐ PARTICIPATING IN PART ☑ NONE
☐ NON-PARTICIPATING (MAINTENANCE) ☐ NON-PARTICIPATING

FEDERAL SEGREGATION (if more than one Funding Source or P.I.P. type)
☐ CCO FUNDED PER CONTRACT ☐ CCO FUNDED AS FOLLOWS

FEDERAL FUNDING SOURCE	PERCENT

ADA Notice: For individuals with sensory disabilities, this document is available in alternate formats. For information call: (916) 654-6410 or TDD (916) 654-3880 or write Records and Forms Management, 1120 N Street, MS-89, Sacramento, CA 95814.

STATE OF CALIFORNIA - DEPARTMENT OF TRANSPORTATION

CONTRACT CHANGE ORDER

Change Requested by: Engineer

CCO: 119	Suppl. No. 4	Contract No. 04 - 0120R4	Road SF-80-12.6/13.2	FED. AID LOC.:

To: **CC MYERS INC**

You are directed to make the following changes from the plans and specifications or do the following described work not included in the plans and specifications for this contract. ***NOTE: This change order is not effective until approved by the Engineer.***

Description of work to be done, estimate of quantities and prices to be paid. (Segregate between additional work at contract price, agreed price and force account.) Unless otherwise stated, rates for rental of equipment cover only such time as equipment is actually used and no allowance will be made for idle time. This last percentage shown is the net accumulated increase or decrease from the original quantity in the Engineer's Estimate.

Extra Work at Force Account:

Provide additional funds for the work specified under the original Change Order No. 119.

Estimated cost of Extra Work at Force Account $500,000.00

Estimated Cost: **Increase** ☑ **Decrease** ☐ **$500,000.00**

By reason of this order the time of completion will be adjusted as follows: 0 days

Submitted by

Signature	Resident Engineer	Date
Jeannette A Balderramos	JEANNIE BALDERRAMOS	2-9-11

Approval Recommended by

Signature	SFOBB Construction Manager	Date
Pete Siegenthal	for MIKE FORNER	2-10-11

Engineer Approval by

Signature	SFOBB Construction Manager	Date
Pete Siegenthal	for MIKE FORNER	2-10-11

We the undersigned contractor, have given careful consideration to the change proposed and agree, if this proposal is approved, that we will provide all equipment, furnish the materials, except as may otherwise be noted above, and perform all services necessary for the work above specified, and will accept as full payment therefor the prices shown above.

NOTE: If you, the contractor, do not sign acceptance of this order, your attention is directed to the requirements of the specifications as to proceeding with the ordered work and filing a written protest within the time therein specified.

Contractor Acceptance by

Signature	(Print name and title)	Date
NOT REQUIRED		

STATE OF CALIFORNIA - DEPARTMENT OF TRANSPORTATION

CONTRACT CHANGE ORDER

RECEIVED

Change Requested by: Contractor

CCO 120	Suppl. No. 0	Contract No. 04 - 0120R4	Road SF-80-12.6/13.2	FED. AID LOC.: ACBRIM-080-1(097)N

00749 6 MAY 16 08

To: CC MYERS INC

You are directed to make the following changes from the plans and specifications or do the following described work not included in the plans and specifications for this contract. ***NOTE: This change order is not effective until approved by the Engineer.***

Description of work to be done, estimate of quantities and prices to be paid. (Segregate between additional work at contract price, agreed price and force account.) Unless otherwise stated, rates for rental of equipment cover only such time as equipment is actually used and no allowance will be made for idle time. This last percentage shown is the net accumulated increase or decrease from the original quantity in the Engineer's Estimate.

Adjustment of Compensation at Lump Sum:

Credit the State due to the 6% anomaly found in Bent W4R CIDH Pile No. 3 cross section from elevation -10.9 to tip pursuant to Section 10-1.24, Piling, of the Contract Special Provisions.

The Contractor agrees to credit the State at a lump sum price of $ 400.00, which constitutes full and complete compensation, including markups for this change.

Cost of Adjustment of Compensation at Lump Sum .....($400.00)

Estimated Cost: Increase ☐ Decrease ☑ **($400.00)**

By reason of this order the time of completion will be adjusted as follows: 0 days

Submitted by

Signature	Resident Engineer	Date
	BILL CASEY	1-29-08

Approval Recommended by

Signature	Area Construction Manager	Date
	DENNIS TURCHON	1/29/08

Engineer Approval by

Signature	Area Construction Manager	Date
	DENNIS TURCHON	3/7/08

We the undersigned contractor, have given careful consideration to the change proposed and agree, if this proposal is approved, that we will provide all equipment, furnish the materials, except as may otherwise be noted above, and perform all services necessary for the work above specified, and will accept as full payment therefor the prices shown above.

NOTE: **If you, the contractor, do not sign acceptance of this order, your attention is directed to the requirements of the specifications as to proceeding with the ordered work and filing a written protest within the time therein specified.**

Contractor Acceptance by

Signature	(Print name and title)	Date
	DEWEY C. LEE JR. Contract Manager	3/9/08

STATE OF CALIFORNIA - DEPARTMENT OF TRANSPORTATION

CONTRACT CHANGE ORDER MEMORANDUM

DATE: 1/17/2008 Page 1 of 1

TO: MIKE FORNER / DENNIS TURCHON	FILE: E.A. 04 - 0120R4
FROM: BILL CASEY	CO-RTE-PM SF-80-12.6/13.2
	FED. NO. ACBRIM-080-1(097)N
CCO#: 120 SUPPLEMENT#: 0 Category Code: AXZZ	CONTINGENCY BALANCE (incl. this change) $96,765,102.86
COST: ($400.00) INCREASE ☐ DECREASE ☑	HEADQUARTERS APPROVAL REQUIRED? ☐ YES ☑ NO
SUPPLEMENTAL FUNDS PROVIDED: $0.00	IS THIS REQUEST IN ACCORDANCE WITH ENVIRONMENTAL DOCUMENTS? ☑ YES ☐ NO
CCO DESCRIPTION: Pile Failure Deduction at W4R	**PROJECT DESCRIPTION:** CONSTRUCT ROUTE 80 TEMP BYPASS STRUCTURE

Original Contract Time:	Time Adj. This Change:	Previously Approved CCO Time Adjustments:	Percentage Time Adjusted: (including this change)	Total # of Unreconciled Deferred Time CCO(s): (including this change)
475 Day(s)	0 Day(s)	1195 Day(s)	252 %	7

THIS CHANGE ORDER PROVIDES FOR:

Crediting the State due to a 6% anomaly found in Bent W4R CIDH Pile No. 3 cross section from elevation -10.9 to tip.

This change is necessary to comply with Section 10-1.24, Piling, of the Contract Special Provisions, which requires that a deduction will be made if the Contractor elected not to repair the anomaly. The State verified the extent of the pile afffected and accept it as is as stipulated in State's Letter dated December 11, 2007 (Referenced Ltr No. 05.03.01 - 001198).

The State will be credited in an Adjustment of Compensation at Agreed Lum Sum price of $ (400.00), which will be credited to the contingency fund. This credit is found to be fair and reasonable based on a analysis prepared by the Engineer and is retained in the project files.

There will be no time adjustment by reason of this change since the work involved did not affect the controlling operation.

CONCURRED BY:		
Construction Engineer:		Date
Bridge Engineer:		Date
Project Engineer:		Date
Project Manager:	Alec Melkonians	Date 1/24/08
FHWA Rep.:		Date
Environmental:		Date
Other (specify):		Date
Other (specify):		Date
District Prior Approval By:		Date
HQ (Issue Approve) By:		Date
Resident Engineer's Signature:		Date 1-29-08

ESTIMATE OF COST

	THIS REQUEST	TOTAL TO DATE
ITEMS	$0.00	$0.00
FORCE ACCOUNT	$0.00	$0.00
AGREED PRICE	$0.00	$0.00
ADJUSTMENT	($400.00)	($400.00)
TOTAL	($400.00)	($400.00)

FEDERAL PARTICIPATION

☐ PARTICIPATING ☐ PARTICIPATING IN PART ☐ NONE
☐ NON-PARTICIPATING (MAINTENANCE) ☑ NON-PARTICIPATING

FEDERAL SEGREGATION (if more than one Funding Source or P.I.P. type)
☑ CCO FUNDED PER CONTRACT ☐ CCO FUNDED AS FOLLOWS

FEDERAL FUNDING SOURCE	PERCENT

ADA Notice: For individuals with sensory disabilities, this document is available in alternate formats. For information call: (916) 654-6410 or TDD (916) 654-3880 or write Records and Forms Management, 1120 N Street, MS-89, Sacramento, CA 95814.

STATE OF CALIFORNIA - DEPARTMENT OF TRANSPORTATION

CONTRACT CHANGE ORDER MEMORANDUM

DATE: 1/17/2008 Page 1 of 1

TO: MIKE FORNER / DENNIS TURCHON	FILE: E.A. 04 - 0120R4
FROM: BILL CASEY	CO-RTE-PM SF-80-12.6/13.2
	FED. NO. ACBRIM-080-1(097)N
CCO#: 120 SUPPLEMENT#: 0 Category Code: AXZZ	CONTINGENCY BALANCE (incl. this change) $96,765,102.86
COST: ($400.00) INCREASE ☐ DECREASE ☑	HEADQUARTERS APPROVAL REQUIRED? ☐ YES ☑ NO
SUPPLEMENTAL FUNDS PROVIDED: $0.00	IS THIS REQUEST IN ACCORDANCE WITH ENVIRONMENTAL DOCUMENTS? ☑ YES ☐ NO
CCO DESCRIPTION: Pile Failure Deduction at W4R	**PROJECT DESCRIPTION:** CONSTRUCT ROUTE 80 TEMP BYPASS STRUCTURE

Original Contract Time:	Time Adj. This Change:	Previously Approved CCO Time Adjustments:	Percentage Time Adjusted: (including this change)	Total # of Unreconciled Deferred Time CCO(s): (including this change)
475 Day(s)	0 Day(s)	1195 Day(s)	252 %	7

THIS CHANGE ORDER PROVIDES FOR:

Crediting the State due to a 6% anomaly found in Bent W4R CIDH Pile No. 3 cross section from elevation -10.9 to tip.

This change is necessary to comply with Section 10-1.24, Piling, of the Contract Special Provisions, which requires that a deduction will be made if the Contractor elected not to repair the anomaly. The State verified the extent of the pile afffected and accept it as is as stipulated in State's Letter dated December 11, 2007 (Referenced Ltr No. 05.03.01 - 001198).

The State will be credited in an Adjustment of Compensation at Agreed Lum Sum price of $ (400.00), which will be credited to the contingency fund. This credit is found to be fair and reasonable based on a analysis prepared by the Engineer and is retained in the project files.

There will be no time adjustment by reason of this change since the work involved did not affect the controlling operation.

CONCURRED BY:		
Construction Engineer:		Date
Bridge Engineer:		Date
Project Engineer:		Date
Project Manager:	Alec Melkonians	Date 1/24/08
FHWA Rep.:		Date
Environmental:		Date
Other (specify):		Date
Other (specify):		Date
District Prior Approval By:		Date
HQ (Issue Approve) By:		Date
Resident Engineer's Signature:		Date 1-29-08

ESTIMATE OF COST

	THIS REQUEST	TOTAL TO DATE
ITEMS	$0.00	$0.00
FORCE ACCOUNT	$0.00	$0.00
AGREED PRICE	$0.00	$0.00
ADJUSTMENT	($400.00)	($400.00)
TOTAL	($400.00)	($400.00)

FEDERAL PARTICIPATION

☐ PARTICIPATING ☐ PARTICIPATING IN PART ☐ NONE
☐ NON-PARTICIPATING (MAINTENANCE) ☑ NON-PARTICIPATING

FEDERAL SEGREGATION (if more than one Funding Source or P.I.P. type)
☑ CCO FUNDED PER CONTRACT ☐ CCO FUNDED AS FOLLOWS

FEDERAL FUNDING SOURCE	PERCENT

ADA Notice: For individuals with sensory disabilities, this document is available in alternate formats. For information call: (916) 654-6410 or TDD (916) 654-3880 or write Records and Forms Management, 1120 N Street, MS-89, Sacramento, CA 95814.

CONTRACT CHANGE ORDER

Change Requested by: Engineer

CCO: 121	Suppl. No. 0	Contract No. 04 - 0120R4	Road SF-80-12.6/13.2	FED. AID LOC.: ACBRIM-080-1(097)N

To: **CC MYERS INC**

You are directed to make the following changes from the plans and specifications or do the following described work not included in the plans and specifications for this contract. ***NOTE: This change order is not effective until approved by the Engineer.***

Description of work to be done, estimate of quantities and prices to be paid. (Segregate between additional work at contract price, agreed price and force account.) Unless otherwise stated, rates for rental of equipment cover only such time as equipment is actually used and no allowance will be made for idle time. This last percentage shown is the net accumulated increase or decrease from the original quantity in the Engineer's Estimate.

Extra Work at Lump Sum:

Perform all excavation, install temporary railing (Type K) and construct the temporary soil nail and soldier pile walls as shown on Sheets No. 2 and 3 of this change order. Construction of the temporary soil nail and soldier pile walls shall conform to all applicable specifications of Change Order No. 61, Supplement No. 1.

For this work, the Contractor will be compensated a lump sum of $142,670.00. This sum constitutes full and final compensation for all costs, including all markups, associated with the work of this change.

Estimated cost of Extra Work at Lump Sum $142,670.00

Estimated Cost: **Increase** ☑ **Decrease** ☐ **$142,670.00**

By reason of this order the time of completion will be adjusted as follows: 0 days

Submitted by

Signature	Resident Engineer BILL CASEY	Date 2-28-08

Approval Recommended by

Signature	Area Construction Manager DENNIS TURCHON	Date 2/28/08

Engineer Approval by

Signature	Area Construction Manager DENNIS TURCHON	Date 3/7/08

We the undersigned contractor, have given careful consideration to the change proposed and agree, if this proposal is approved, that we will provide all equipment, furnish the materials, except as may otherwise be noted above, and perform all services necessary for the work above specified, and will accept as full payment therefor the prices shown above.

NOTE: If you, the contractor, do not sign acceptance of this order, your attention is directed to the requirements of the specifications as to proceeding with the ordered work and filing a written protest within the time therein specified.

Contractor Acceptance by

Signature	(Print name and title) DANIEL E. SMICK, PRESIDENT	Date 3/10/08

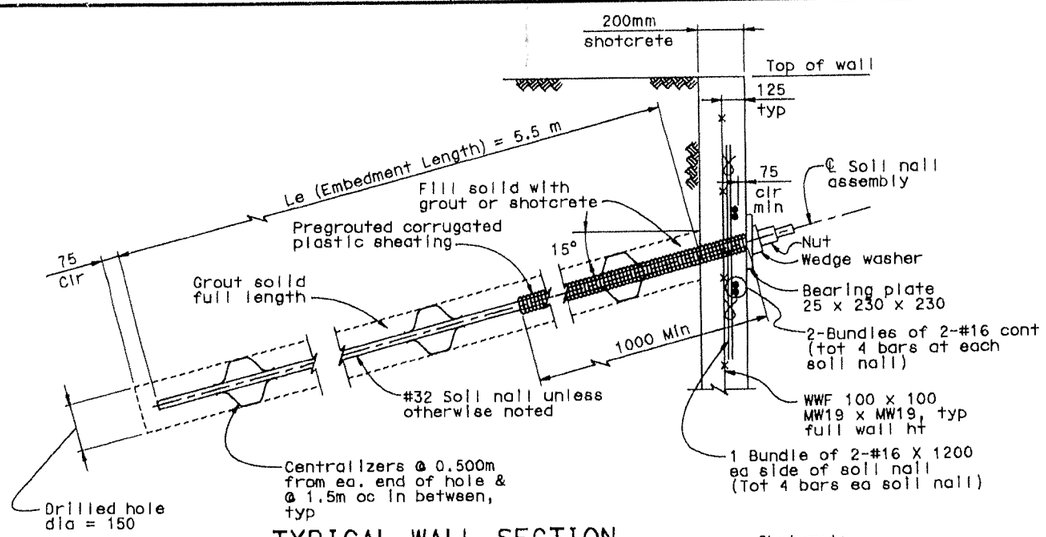

TYPICAL WALL SECTION

NO SCALE

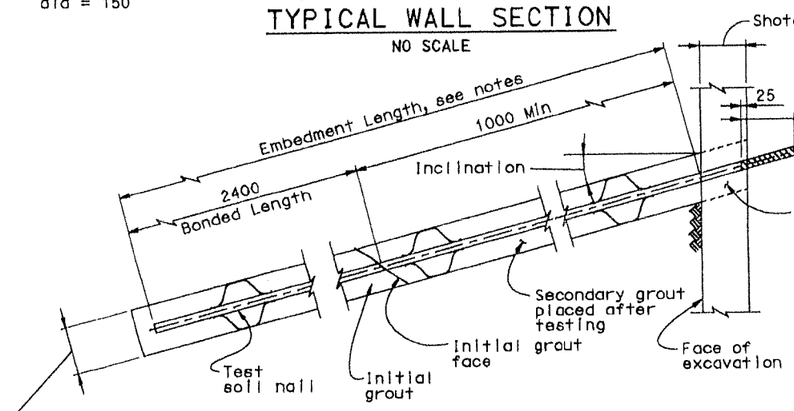

TEST SOIL NAIL ASSEMBLY

NO SCALE

TEST NAIL ASSEMBLY NOTES:

1. Diameter of test soil nail and drilled hole shall be same diameter as adjacent production nails.
2. Embedment length shall be 2/3 the embedment length of adjacent production soil nail assemblies, but not less than 4000 mm.
3. Total length of test soil nail assembly shall be embedment length plus the length required for jacking equipment.
4. The inclination of test soil nail assembly shall be the same as adjacent production soil nail assemblies.
5. The pullout test load for 150mm diameter drilled hole shall be 305 kN.
6. See other sheets for test nail locations. Number of test nails shall be not less than 5 percent of the total number of production nails and each row of each wall shall have at least two test nails. Provide at least 2 test nails for each diameter of production nail.

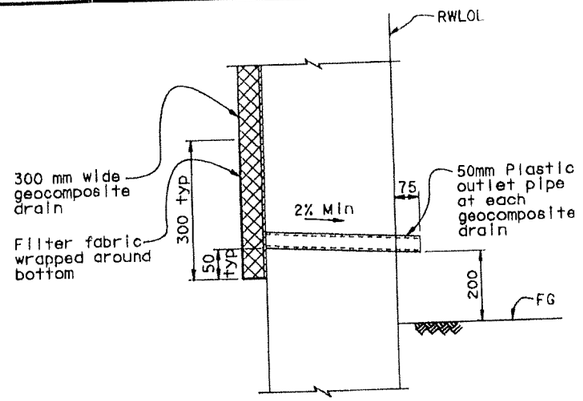

SECTION A-A

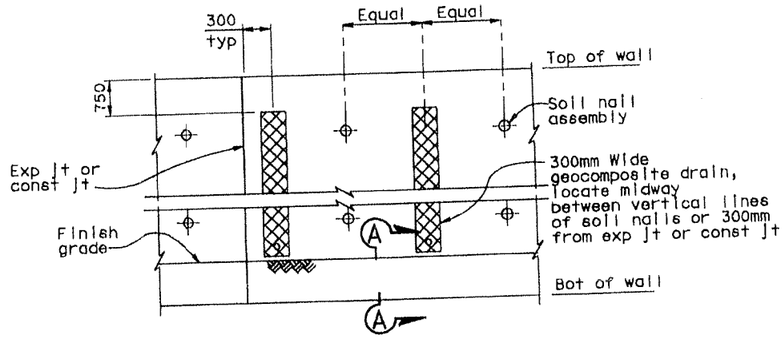

PARTIAL WALL ELEVATION

WALL DRAINAGE DETAILS

NO SCALE

SOIL NAIL WALL DESIGN DATA

Shotcrete:	f'c = 22MPa
Soil Nails:	ASTM Designation: A615/A615M OR A706/A706M, fy = 420MPa
Soil Parameters:	Unit Weight = 25.9 kN/m3 (rock), 19.6 kN/m3 (soil) Soil Friction Angle: 33 degrees Soil Cohesion: 0 Ultimate Bond Stress = 275 kPa (between soil nail grout & drilled hole at rock) = 85 kPa (between soil nail grout & drilled hole at soil)
Design Loads:	D = Dead Load LL = Live Load E = Lateral Earth Pressure EQE = Seismic Earth Load = 0.20g See "Excavation Plan at Bent W3R" sheet for crane load surcharge
Safety Factors:	Minimum Factor Of Safety, DL + LL + E = 1.35 DL + E + EQE = 1.10

ALL DIMENSIONS ARE IN MILLIMETERS UNLESS OTHERWISE SHOWN

DIST.	COUNTY	ROUTE	KILOMETER POST TOTAL PROJECT	SHEET NO.	TOTAL SHEETS
04	SF	80	12.6/13.2	80A	137

Caltrans Metric

REGISTERED ENGINEER - CIVIL

3/18/08

PLANS APPROVAL DATE

The State of California or its officers or agents shall not be responsible for the accuracy or completeness of electronic copies of this plan sheet.

REGISTERED PROFESSIONAL ENGINEER — Ali. ELY — No. 18880 — Exp. 6-30-09 — CIVIL — STATE OF CALIFORNIA

T.Y. LIN / MOFFATT & NICHOL
TWO HARRISON STREET
SAN FRANCISCO, CA 94105

04-0120R4

SUPPLEMENTAL SHEET

CONTRACT CHANGE ORDER NO. 121

SHEET 2 OF 3

SAN FRANCISCO OAKLAND BAY BRIDGE
EAST SPAN SEISMIC SAFETY PROJECT

YBI TRANSITION STRUCTURES

ADVANCE CONST PACKAGE NO. 1R2

SOIL NAIL WALL DETAILS

DESIGN OVERSIGHT	DESIGN	BY Lee	CHECKED Birdy
JOHN MOOK, BERNARD CHAN, JUAN F. DARPIO	DETAILS	BY Samson	CHECKED Birdy
SIGN OFF DATE	QUANTITIES	BY	CHECKED

PREPARED FOR THE STATE OF CALIFORNIA DEPARTMENT OF TRANSPORTATION

Jal Birdy
PROJECT ENGINEER

CU 04251
EA 0120S1

BRIDGE NO. 34-0006 L/R
KILOMETER POST 12.8

DIRECTIONAL POINTER BEARING EARLIER REVISION DATES →

REVISION DATES (PRELIMINARY STAGE ONLY)

SHEET 24A OF 65

ORIGINAL SCALE IN MILLIMETERS FOR REDUCED PLANS 0 10 20 30 40 50 60 70 80 90 100

FILE => p:\4141-06\CADD\TS\Final Const 4\Adv Const Pkg 1R2\Soil Nail Wall Det.dgn

Rev. Date: 5-16-96

CHECKED PLAN SUBMITTAL

DATE PLOTTED => 1/22/2008 TIME PLOTTED => 8:21:38 AM USERNAME => fsamson

January 18, 2008

Note:
At fractured rock faces steeper than 1:1 Contractor to provide anchored shotcrete protection for surfacial stability. Anchored shotcrete to incorporate a means to eliminate hydrostatic water pressure buildup.

Indicates bottom of footing elevation in meters

Indicates East Tie-in Skid Bent I.D.

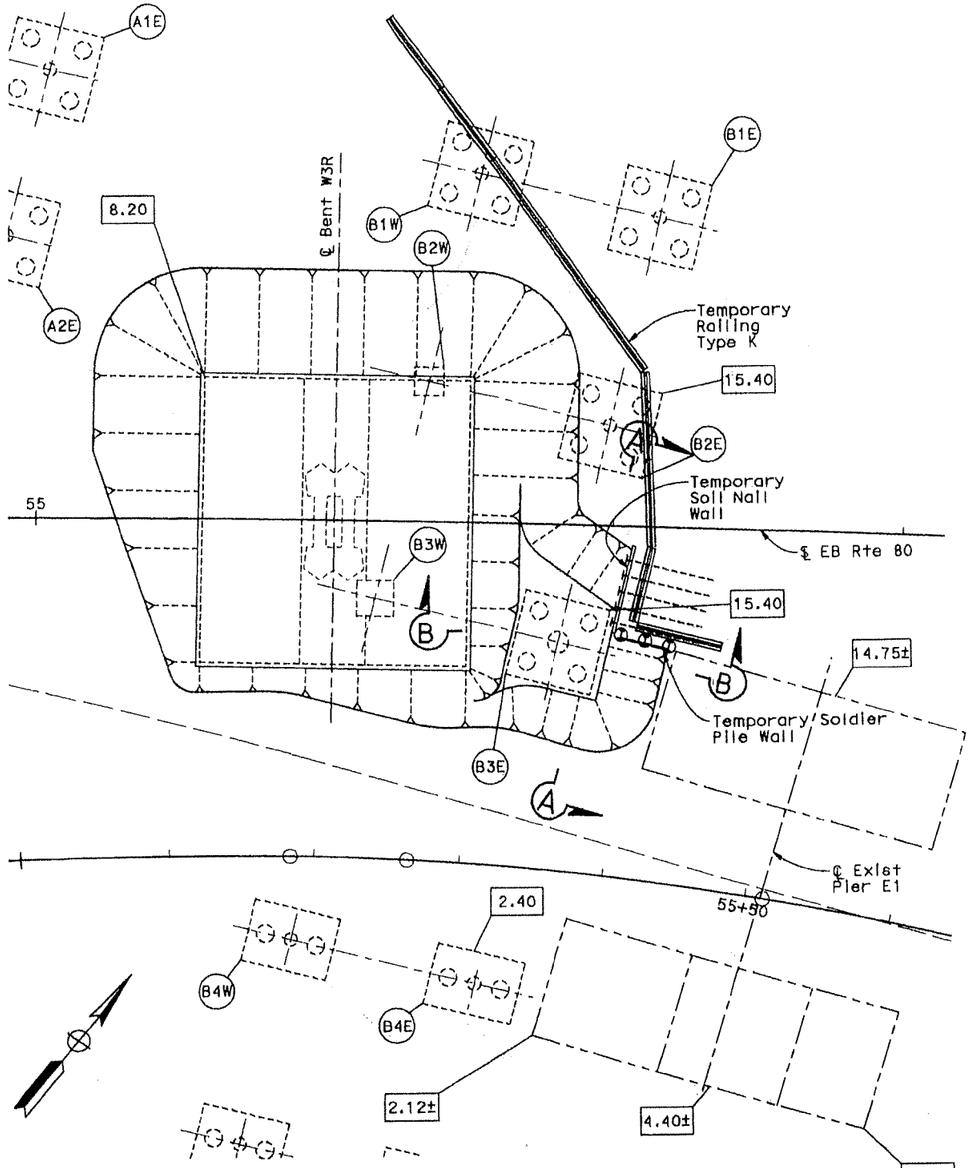

FOUNDATION EXCAVATION PLAN
1:200

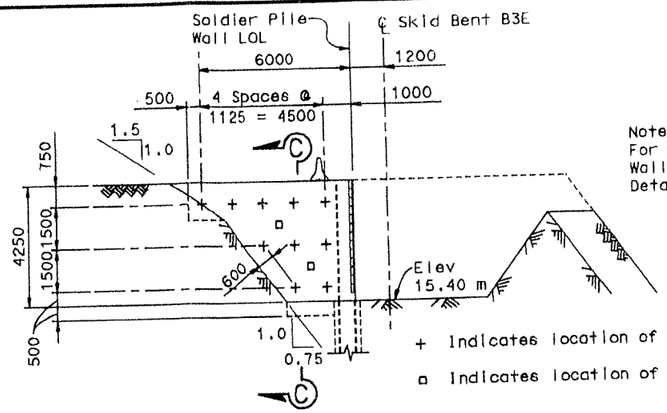

Note:
For weepholes at Soil Nail Wall, see "Soil Nail Wall Details" sheet.

ELEVATION A-A - TEMPORARY SOIL NAIL WALL
1:100

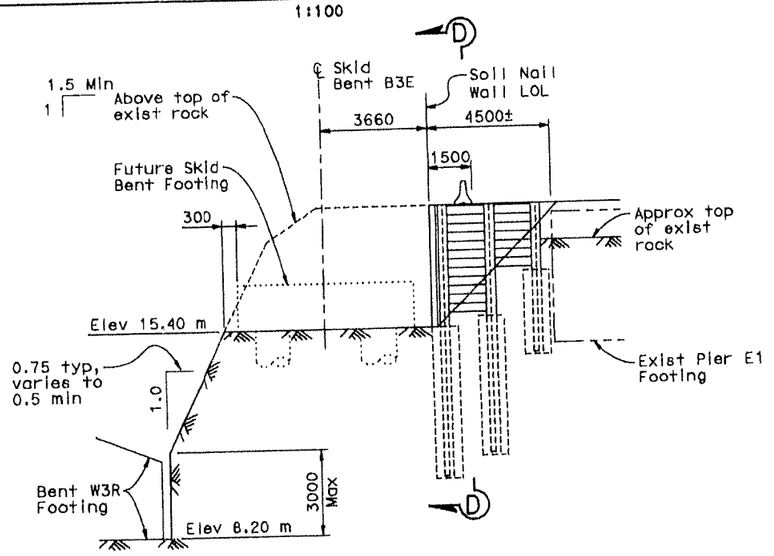

ELEVATION B-B - TEMPORARY SOLDIER PILE WALL
1:100

Note: Temporary Soil Nail and Soldier Pile Walls designed for lateral preasures due to following crane load surcharge:

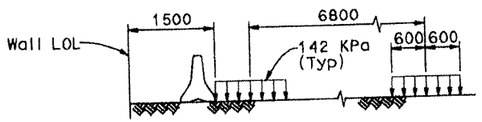

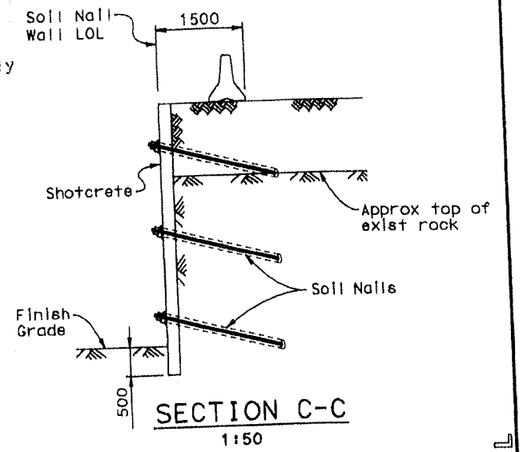

SECTION C-C
1:50

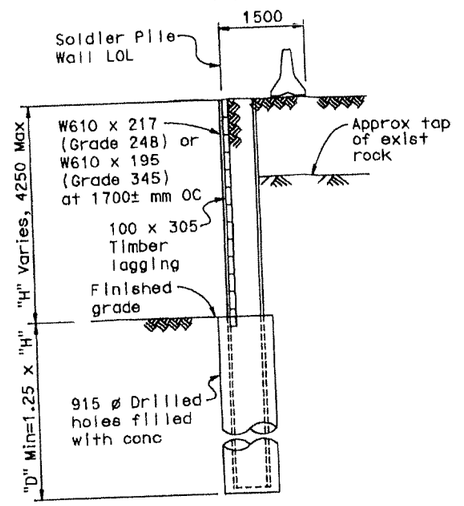

SECTION D-D
1:50

ALL DIMENSIONS ARE IN MILLIMETERS UNLESS OTHERWISE SHOWN

SUPPLEMENTAL SHEET 04-0120R4

CONTRACT CHANGE ORDER NO. 121

SHEET 3 OF 3

DIST.	COUNTY	ROUTE	KILOMETER POST TOTAL PROJECT	SHEET NO.	TOTAL SHEETS
04	SF	80	12.6/13.2	60A	137

REGISTERED ENGINEER - CIVIL
1/18/08
PLANS APPROVAL DATE
The State of California or its officers or agents shall not be responsible for the accuracy or completeness of electronic copies of this plan sheet.
REGISTERED PROFESSIONAL ENGINEER A.L. ELY No. 18880 Exp. 6-30-09 CIVIL STATE OF CALIFORNIA

T.Y.LIN / MOFFATT & NICHOL
TWO HARRISON STREET
SAN FRANCISCO, CA 94105

CHECKED PLAN SUBMITTAL

DATE PLOTTED => 1/21/2008 TIME PLOTTED => 10:04:47 AM
USERNAME => fsamson

January 18, 2008

SAN FRANCISCO OAKLAND BAY BRIDGE
EAST SPAN SEISMIC SAFETY PROJECT

YBI TRANSITION STRUCTURES

ADVANCE CONST PACKAGE NO. 1R2

EXCAVATION PLAN AT BENT W3R

DESIGN OVERSIGHT					
JOHN MOOK, BERNARD CHAN, JUAN F. DARPIO		DESIGN	BY Lee	CHECKED Birdy	
SIGN OFF DATE		DETAILS	BY Samson	CHECKED Birdy	
Rev. Date: 5-18-98		QUANTITIES	BY	CHECKED	

PREPARED FOR THE STATE OF CALIFORNIA DEPARTMENT OF TRANSPORTATION

Jal Birdy
PROJECT ENGINEER

CU 04251
EA 0120S1

BRIDGE NO.	34-0006 L/R
KILOMETER POST	12.8

REVISION DATES (PRELIMINARY STAGE ONLY)

SHEET	OF
4A	65

ORIGINAL SCALE IN MILLIMETERS FOR REDUCED PLANS 0 10 20 30 40 50 60 70 80 90 100

FILE => p:\4141-06\CADD\TS\Final Const 4\Adv Const Pkg 1R2\Fdn Exc.dgn

RECEIVED

STATE OF CALIFORNIA - DEPARTMENT OF TRANSPORTATION

CONTRACT CHANGE ORDER MEMORANDUM

007497 MAY 1 08 DATE: 2/11/2008

TO: MIKE FORNER / DENNIS TURCHON	FILE: E.A. 04 - 0120R4
	CO-RTE-PM SF-80-12.6/13.2
FROM: BILL CASEY	FED. NO. ACBRIM-080-1(097)N
CCO#: 121 SUPPLEMENT#: 0 Category Code: CMPA	CONTINGENCY BALANCE (incl. this change) $88,435,924.82
COST: $142,670.00 INCREASE ☑ DECREASE ☐	HEADQUARTERS APPROVAL REQUIRED? ☐ YES ☑ NO
SUPPLEMENTAL FUNDS PROVIDED: $0.00	IS THIS REQUEST IN ACCORDANCE WITH ENVIRONMENTAL DOCUMENTS? ☑ YES ☐ NO
CCO DESCRIPTION: Soil Nail Wall @ W3R	**PROJECT DESCRIPTION:** CONSTRUCT ROUTE 80 TEMP BYPASS STRUCTURE

Original Contract Time:	Time Adj. This Change:	Previously Approved CCO Time Adjustments:	Percentage Time Adjusted: (including this change)	Total # of Unreconciled Deferred Time CCO(s): (including this change)
475 Day(s)	0 Day(s)	1195 Day(s)	252 %	7

THIS CHANGE ORDER PROVIDES FOR:

The construction of a temporary retaining wall that will allow for the construction of a future skid bent footing for the East Tie-In structure.

This contract calls for the construction of a temporary detour for both eastbound and westbound I-80 traffic that allows for the tie in of the east span of the new San Francisco Oakland Bay Bridge (SFOBB) to Yerba Buena Island. The detour consist of three main structures, the East tie-in to the existing bridge, the West tie in to the island and the Viaduct structure between the two tie ins.

The Department's December 14, 2006 Strategy memo called for the East Tie-In (ETI) structure to be constructed by rolling out the existing structure and rolling in the new detour structure in lieu of the contractor's plan to incorporate the existing structure as part of the new detour. The roll out/roll in design requires the construction of a steel skid bent structure that supports the ETI structure as it is rolled into place and the existing structure as it is rolled out.

This change order calls for the construction of a temporary retaining wall that will allow for the construction of a footing of the skid bent structure while limiting this project's encroachment into the adjacent SAS project's (04-0120F4) staging area. Encroaching into that area would potentially delay that contract and the entire SFOBB corridor. The plans for the skid bent footing are still being finalized but the construction of the retaining wall will be performed now in order to avoid delays to the contract and potentially to the entire SFOBB corridor.

The work includes approximately 400 cubic meters of rock excavation and construction of the temporary wall comprised of a section of soil nail and a section of temporary soldier pile walls. Placement of k-rail above the excavation is also included.

Compensation shall be paid as extra work at an agreed lump sum of $142,670.00 which shall be financed from the contract's contingency funds. A cost estimate is on file.

No adjustment of contract time is warranted as the work will not affect the controlling operation.

This change was cocurred by Alec Melkonians - Asst. Project Manager and Hong Wong - Project Engineer.

Maintenance concurrence is not required as the wall is a temporary structure and does not affect any permanent roadway features.

CONCURRED BY:			
Construction Engineer:	M u Angel	Date	2/28/08
Bridge Engineer:	Mike Whiteside, Toll Bridge Design	Date	2/6/08
Project Engineer:	Hong Wong, PE	Date	2/11/08
Project Manager:	Alec Melkonians	Date	2/11/08
FHWA Rep.:		Date	
Environmental:		Date	
Other (specify):		Date	
Other (specify):		Date	
District Prior Approval By:		Date	
HQ (Issue Approve) By:		Date	
Resident Engineer's Signature:		Date	
			2-25-08

ESTIMATE OF COST

	THIS REQUEST	TOTAL TO DATE
ITEMS	$0.00	$0.00
FORCE ACCOUNT	$0.00	$0.00
AGREED PRICE	$142,670.00	$142,670.00
ADJUSTMENT	$0.00	$0.00
TOTAL	$142,670.00	$142,670.00

FEDERAL PARTICIPATION

☐ PARTICIPATING ☐ PARTICIPATING IN PART ☐ NONE
☐ NON-PARTICIPATING (MAINTENANCE) ☑ NON-PARTICIPATING

FEDERAL SEGREGATION (if more than one Funding Source or P.I.P. type)
☑ CCO FUNDED PER CONTRACT ☐ CCO FUNDED AS FOLLOWS

FEDERAL FUNDING SOURCE	PERCENT

STATE OF CALIFORNIA - DEPARTMENT OF TRANSPORTATION

CONTRACT CHANGE ORDER

Change Requested by: Engineer

CCO 121	Suppl. No. 1	Contract No. 04 - 0120R4	Road SF-80-12.6/13.2	FED. AID LOC.: ACBRIM-080-1(097)N

To: CC MYERS INC

You are directed to make the following changes from the plans and specifications or do the following described work not included in the plans and specifications for this contract. NOTE: This change order is not effective until approved by the Engineer.

made for idle time. This last percentage shown is the net accumulated increase or decrease from the original quantity

Extra Work at Lump Sum:

Perform all excavation, fine grading, backfilling, relocating existing temporary railing (Type K), installing additional temporary railing (Type K), and construct the Stage 2 temporary soil nail wall and the temporary soldier pile wall as shown on Sheets No. 2 through 5 of this change order. Construction of the temporary soil nail and soldier pile walls shall conform to all applicable specifications of Change Order No. 61, Supplement No. 1.

For this work, the Contractor will be compensated a lump sum of $518,130.00. This sum constitutes full and final compensation for all outstanding costs, including all markups, associated with the work of this change.

Total Cost of Extra Work at Lump Sum $518,130.00

Estimated Cost: Increase ☑ Decrease ☐ **$518,130.00**

By reason of this order the time of completion will be adjusted as follows: 0 days

Submitted by

Signature	Resident Engineer BILL CASEY	Date 3-13-09

Approval Recommended by

Signature Deanna Vilcheck	Area Construction Manager DEANNA VILCHECK	Date 3/16/09

Engineer Approval by

Signature Deanna Vilcheck	Area Construction Manager DEANNA VILCHECK	Date 5/6/09

We the undersigned contractor, have given careful consideration to the change proposed and agree, if this proposal is approved, that we will provide all equipment, furnish the materials, except as may otherwise be noted above, and perform all services necessary for the work above specified, and will accept as full payment therefor the prices shown above.

NOTE: If you, the contractor, do not sign acceptance of this order, your attention is directed to the requirements of the specifications as to proceeding with the ordered work and filing a written protest within the time therein specified.

Contractor Acceptance by

Signature	(Print name and title) DANIEL E. Hunick, PRESIDENT	Date 4/30/09

DIST	COUNTY	ROUTE	KILOMETER POST TOTAL PROJECT	SHEET NO.	TOTAL SHEETS
04	SF	80	12.6/13.2	57R2	137

Al Ely
REGISTERED ENGINEER - CIVIL
PLANS APPROVAL DATE
A.L. ELY No. 18880 Exp. 6-30-09 CIVIL
The State of California or its officers or agents shall not be responsible for the accuracy or completeness of electronic copies of this plan sheet.

APPROXIMATE BRIDGE QUANTITIES

	WB STRUCTURE	EB STRUCTURE	TOTAL
STRUCTURE EXCAVATION (BRIDGE)	2898	5919	8820 M3
STRUCTURE EXCAVATION (TYPE D)	-	542	540 M3
STRUCTURE EXCAVATION (TYPE H)	244	708	950 M3
STRUCTURE EXCAVATION (CLASS II)	-	54	50 M3
STRUCTURE EXCAVATION (ROCK)	3098	3945	7040 M3
STRUCTURE BACKFILL (BRIDGE)	2223	5355	7580 M3
TIEDOWN ANCHOR	68	36	104 EA
STRUCTURAL CONCRETE, BRIDGE FOOTING	3925	5562	9490 M3
STRUCTURAL CONCRETE, BRIDGE	3573	3777	7350 M3
BAR REINFORCING STEEL (BRIDGE)	1375072	1835160	3210230 KG
BRIDGE DECK DRAINAGE SYSTEM	487	341	830 KG

GENERAL NOTES

Load Factor Design

Design: Caltrans Design Specifications-April 2000 (LFD)
(1996 AASHTO with interims and revisions by Caltrans)
Dead Load: Includes 1675 N/m2 for future wearing surface on roadbed
Live Load: HS20-44 and alternative and permit design load
Bike Path Live Load: 4000 N/m2
Future Mass Transit Loading:

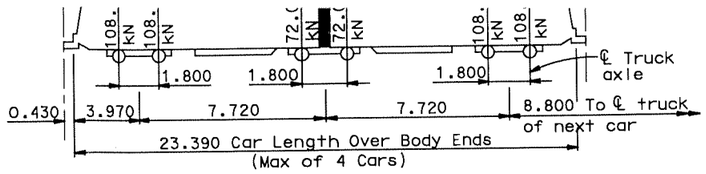

Seismic Loading: Refer to project specific seismic design criteria for San Francisco Oakland Bay Bridge East Span Seismic Safety Project Dated 01-08-00 See "Site Specific Response Spectra"

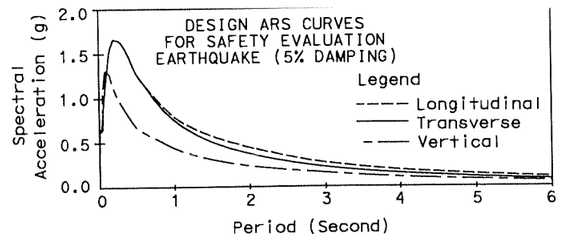

SITE SPECIFIC RESPONSE SPECTRA

Reinforced Concrete: Fy = 420 MPa
F'c = See "Concrete Strength & Type Limits"

PILE DATA								
LOCATION	DESIGN LOADING	NOMINAL RESISTANCE COMPRESSION	NOMINAL RESISTANCE TENSION	DESIGN TIP ELEVATION (1)	(2)	(3)	SPECIFIED TIP ELEVATION	MINIMUM ROCK SOCKET LENGTH
PILE TYPE W 360 x 196 ASTM A-992 (GRADE 50)								
BENT W6L	1350 kN	2700 kN	1350 kN	-11.5	-6.5	-2.0	-11.5	
BENT W5L	1350 kN	2700 kN	1350 kN	-10.5	-6.5	-3.0	-10.5	
BENT W6R NORTH COLUMN	1350 kN	2700 kN	1350 kN	-13.0	-6.5	-2.0	-13.0	
BENT W6R SOUTH COLUMN	1350 kN	2700 kN	1350 kN	-18.0	-13.5	-4.5	-18.0	
BENT W5R NORTHERLY 7 PILE ROWS	1350 kN	2700 kN	1350 kN	-13.5	-10.0	-5.5	-13.5	
BENT W5R SOUTHERLY 12 PILE ROWS	1350 kN	2700 kN	1350 kN	-16.5	-11.0	-5.5	-16.5	
2400 mm DIA CIDH CONCRETE PILES								
BENT W4R PILE NO. 1	-	25200 kN	8900 kN	-15.0	-15.0	-15.0	-15.0	3.5
BENT W4R PILE NOS. 2 & 3	-	25200 kN	8900 kN	-13.5	-13.5	-13.5	-13.5	3.5
BENT W4R PILE NOS. 4,5 & 6	-	25200 kN	8900 kN	-12.5	-12.5	-12.5	-12.5	3.5
BENT W4R PILE NOS. 7 & 8	-	25200 kN	8900 kN	-12.0	-12.0	-12.0	-12.0	4.0
BENT W4R PILE NOS. 9,10 & 11	-	25200 kN	8900 kN	-10.0	-10.0	-10.0	-10.0	4.0
BENT W4R PILE NO.12	-	25200 kN	8900 kN	-9.5	-9.5	-9.5	-9.5	4.5
BENT W4R PILE NOS. 13,14 & 15	-	25200 kN	8900 kN	-8.0	-8.0	-8.0	-8.0	4.5
BENT W4R PILE NOS. 16 & 17	-	25200 kN	8900 kN	-6.0	-6.0	-6.0	-6.0	4.5

Design tip elevation is controlled by the following demands: (1) Compression, (2) Tension, (3) Lateral.
Rock socket lengths shown represent minimum embedment into moderately hard rock.

FOOTING PRESSURE			
	ALLOWABLE	ULTIMATE	MAX DESIGN (SERVICE LOAD)
BENT W4L	1800 kN/m2	5400 kN/m2	765 kN/m2
BENT W3L	1550 kN/m2	4650 kN/m2	765 kN/m2
BENT W3R	1350 kN/m2	4050 kN/m2	765 kN/m2

APPLICABLE STANDARD PLANS (DATED JULY 1999)

A10A	ABBREVIATIONS
A10B	SYMBOLS
A62B	LIMITS OF PAYMENT FOR EXCAVATION AND BACKFILL - BRIDGE SURCHARGE AND WALL
A62C	LIMITS OF PAYMENT FOR EXCAVATION AND BACKFILL - BRIDGE
B0-1	BRIDGE DETAILS
B7-6	DECK DRAINS TYPES D-1 AND D-2

INDEX TO BRIDGE PLANS

1. GENERAL PLAN
2. GENERAL NOTES
3. FOUNDATION PLAN NO. 1
4. FOUNDATION PLAN NO. 2
4A. STAGE 1 EXCAVATION PLAN AT BENT W3R
4B. STAGE 2 EXCAVATION PLAN AT BENT W3R
4C. STAGE 2 TEMPORARY WALL DETAILS
5. PILE & TIEDOWN ANCHOR DETAILS
6. BENT ELEVATIONS W6 & W5
7. BENT ELEVATIONS W4 & W3
8. BENT W6L DETAILS NO. 1
9. BENT W6L DETAILS NO. 2
10. BENT W5L DETAILS NO. 1
11. BENT W5L DETAILS NO. 2
12. BENT W4L DETAILS NO. 1
13. BENT W4L DETAILS NO. 2
14. BENT W3L DETAILS NO. 1
15. BENT W3L DETAILS NO. 2
16. BENT W6R DETAILS NO. 1
17. BENT W6R DETAILS NO. 2
18. BENT W6R DETAILS NO. 3
19. BENT W5R DETAILS NO. 1
20. BENT W5R DETAILS NO. 2
21. BENT W4R DETAILS NO. 1
22. BENT W4R DETAILS NO. 2
23. BENT W3R DETAILS NO. 1
24. BENT W3R DETAILS NO. 2
25-45. LOG OF TEST BORINGS NO. 1 TO NO. 21
46-65. "AS BUILT" LOG OF TEST BORINGS NO. 1 TO NO. 20

MARK	DATE	DESCRIPTIONS / REVISIONS	BY	CH'D
2	3/9/09	Added sheets 4A, 4B, 4C		
1	4/18/07	Rev Pile Type & Tip Elevations		

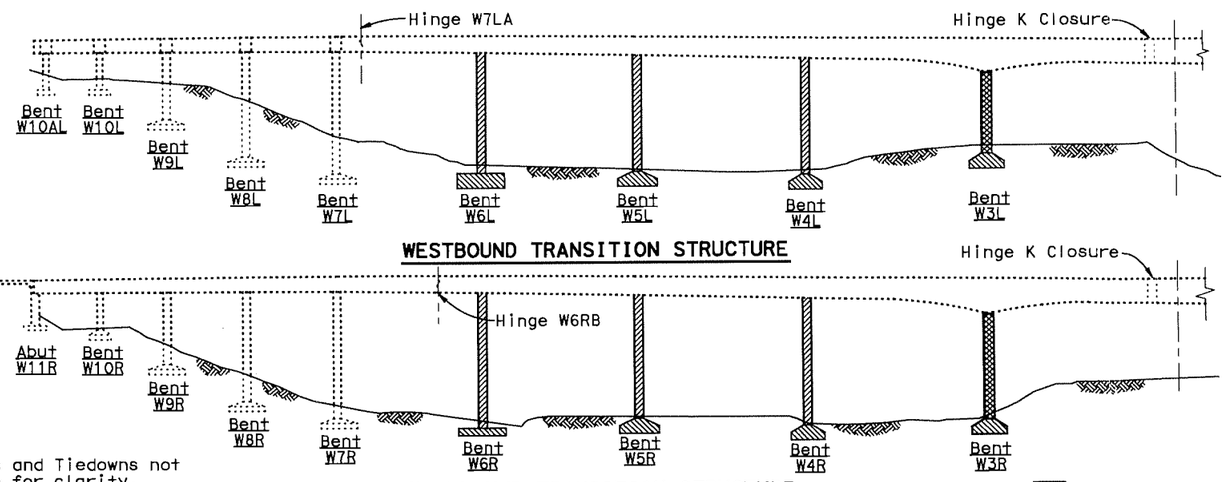

NOTE:
Piles and Tiedowns not shown for clarity.

ALL DIMENSIONS ARE IN METERS UNLESS OTHERWISE SHOWN

CONCRETE STRENGTH & TYPE LIMITS

Structural concrete, bridge (35 MPa at 28 days)
Structural concrete, bridge (25 MPa at 28 days)
Structural concrete, bridge footing (25 MPa at 28 days)

SUPPLEMENTAL SHEET

CONTRACT CHANGE ORDER NO. 121-S1
SHEET 2 OF 5

SAN FRANCISCO OAKLAND BAY BRIDGE
EAST SPAN SEISMIC SAFETY PROJECT

YBI TRANSITION STRUCTURES

ADVANCE CONST PACKAGE NO. 1R2

GENERAL NOTES

DESIGN OVERSIGHT
JOHN MOOK, BERNARD CHAN, JUAN F. CARPIO
SIGN OFF DATE

	BY	CHECKED
DESIGN	Deepal	Jain
DETAILS	Samson	
QUANTITIES		

PREPARED FOR THE STATE OF CALIFORNIA DEPARTMENT OF TRANSPORTATION

Jal Birdy
PROJECT ENGINEER

BRIDGE NO. 34-0006 L/R
KILOMETER POST 12.8

CU 04251
EA 0120S1

DISREGARD PRINTS BEARING EARLIER REVISION DATES
REVISION DATES (PRELIMINARY STAGE ONLY): 1/28/05 7/11/05 1/30/06 8/23/06 3/9/09

SHEET 2R2 OF 65

Rev. Date: 5-18-98

ORIGINAL SCALE IN MILLIMETERS FOR REDUCED PLANS 0 10 20 30 40 50 60 70 80 90 100

FILE => p:\4141-06\CADD\TS\Final Const 4\Adv Const Pkg 1R2\030909\eaitp02.dgn

March 9, 2009

USERNAME => fsamson DATE PLOTTED => 3/10/2009 TIME PLOTTED => 11:14:32 PM

Note:
At fractured rock faces steeper than 1:1 Contractor to provide anchored shotcrete protection for surfacial stability. Anchored shotcrete to incorporate a means to eliminate hydrostatic water pressure buildup.

Indicates bottom of footing elevation in meters

Indicates East Tie-in Skid Bent I.D.

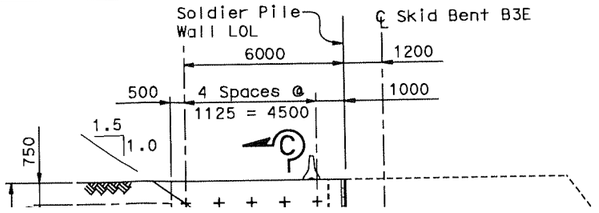

Note:
For weepholes at Soil Nail Wall, see "Soil Nail Wall Details" sheet.

DIST.	COUNTY	ROUTE	KILOMETER POST TOTAL PROJECT	SHEET NO.	TOTAL SHEETS
04	SF	80	12.6/13.2	60AR1	137

REGISTERED ENGINEER - CIVIL

PLANS APPROVAL DATE

A.L. ELY No. 18880 Exp. 6-30-09 CIVIL — REGISTERED PROFESSIONAL ENGINEER — STATE OF CALIFORNIA

The State of California or its officers or agents shall not be responsible for the accuracy or completeness of electronic copies of this plan sheet.

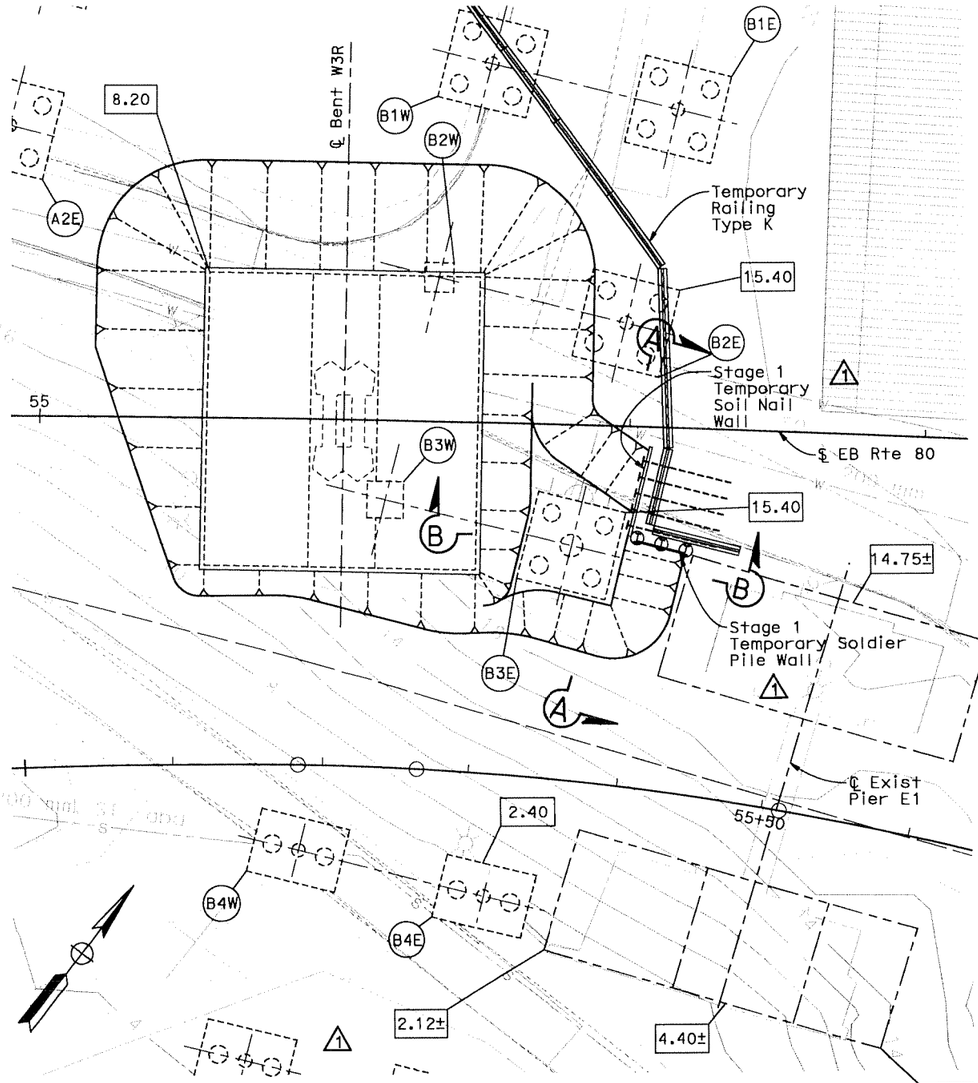

STAGE 1 FOUNDATION EXCAVATION PLAN
1:200

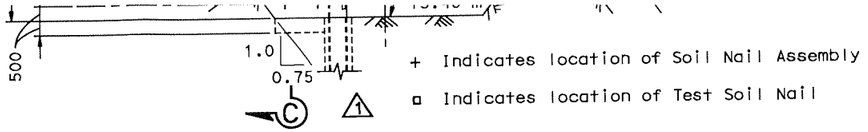

+ Indicates location of Soil Nail Assembly

▫ Indicates location of Test Soil Nail

ELEVATION A-A - STAGE 1 TEMPORARY SOIL NAIL WALL
1:100

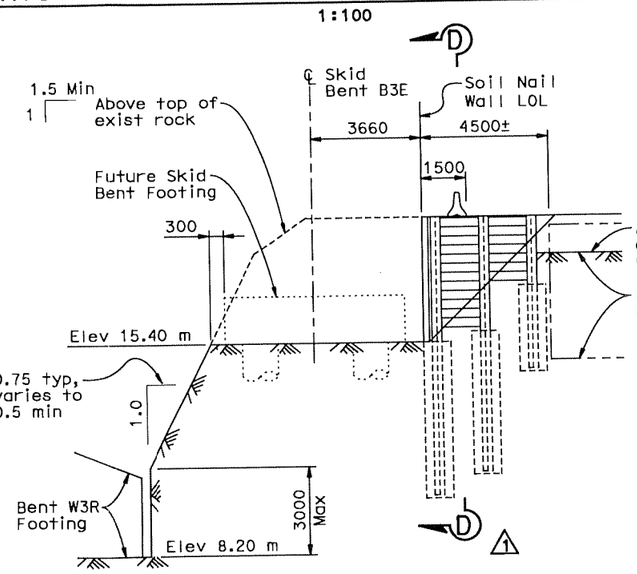

ELEVATION B-B - STAGE 1 TEMPORARY SOLDIER PILE WALL
1:100

Note: Temporary Soil Nail and Soldier Pile Walls designed for lateral pressures due to following crane load surcharge:

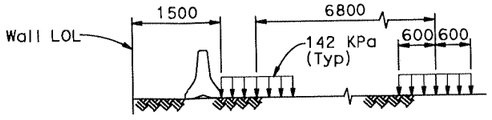

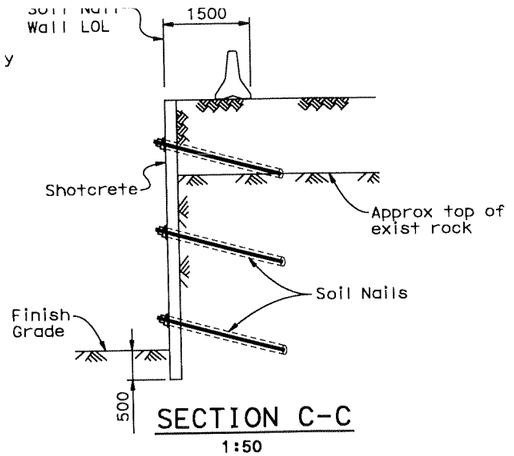

SECTION C-C
1:50

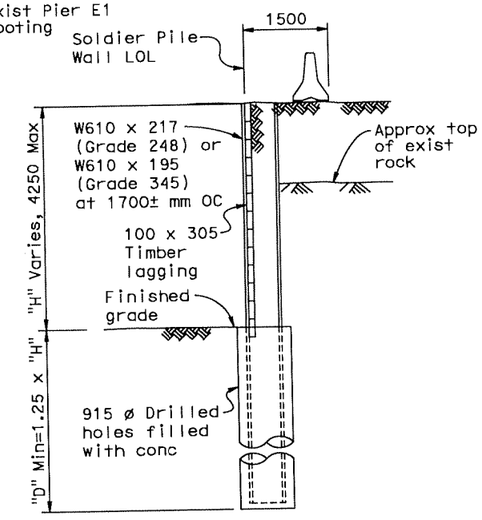

SECTION D-D
1:50

MARK	DATE	DESCRIPTIONS	BY	CH'D
1	8/12/08	Added Stage 1 Delineation	ALE	JNB
		REVISIONS		

ALL DIMENSIONS ARE IN MILLIMETERS UNLESS OTHERWISE SHOWN

SUPPLEMENTAL SHEET

CONTRACT CHANGE ORDER NO. 121-S1
SHEET 3 OF 5

SAN FRANCISCO OAKLAND BAY BRIDGE
EAST SPAN SEISMIC SAFETY PROJECT

YBI TRANSITION STRUCTURES

ADVANCE CONST PACKAGE NO. 1R2

STAGE 1 EXCAVATION PLAN AT BENT W3R

DESIGN OVERSIGHT
JOHN MOOK, BERNARD CHAN, JUAN F. CARPIO
SIGN OFF DATE

	BY	CHECKED
DESIGN	Lee	Birdy
DETAILS	Samson	Birdy
QUANTITIES		

PREPARED FOR THE STATE OF CALIFORNIA DEPARTMENT OF TRANSPORTATION

Jal Birdy
PROJECT ENGINEER

BRIDGE NO. 34-0006 L/R
KILOMETER POST 12.8

CU 04251
EA 0120S1

DISREGARD PRINTS BEARING EARLIER REVISION DATES →

REVISION DATES (PRELIMINARY STAGE ONLY): 1/14/08 7/14/08 7/30/08 8/12/08

SHEET 4AR1 OF 65

ORIGINAL SCALE IN MILLIMETERS FOR REDUCED PLANS 0 10 20 30 40 50 60 70 80 90 100

Rev. Date: 5-18-98

FILE => p:\4141-06\CADD\TS\Final Const 4\Adv Const Pkg 1R2\081208\Stg 1 Fdn Exc.dgn

DATE PLOTTED => 3/10/2009 TIME PLOTTED => 1:15:32 PM
USERNAME => fsamson

August 12, 2008

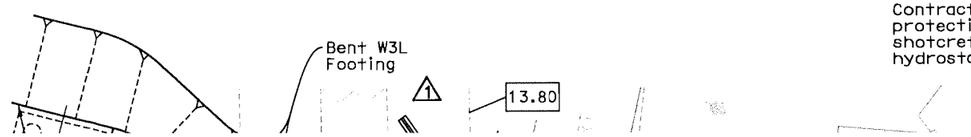

Note:
At fractured rock faces steeper than 1:1 Contractor to provide anchored shotcrete protection for surfacial stability. Anchored shotcrete to incorporate a means to eliminate hydrostatic water pressure buildup.

Indicates bottom of footing elevation in meters

Indicates East Tie-in Skid Bent I.D.

Caltrans Metric

DIST	COUNTY	ROUTE	KILOMETER POST TOTAL PROJECT	SHEET NO.	TOTAL SHEETS
04	SF	80	12.6/13.2	60BR1	137

REGISTERED ENGINEER - CIVIL

A.L. ELY
No. 18880
Exp. 6-30-09
CIVIL
REGISTERED PROFESSIONAL ENGINEER
STATE OF CALIFORNIA

PLANS APPROVAL DATE

The State of California or its officers or agents shall not be responsible for the accuracy or completeness of electronic copies of this plan sheet.

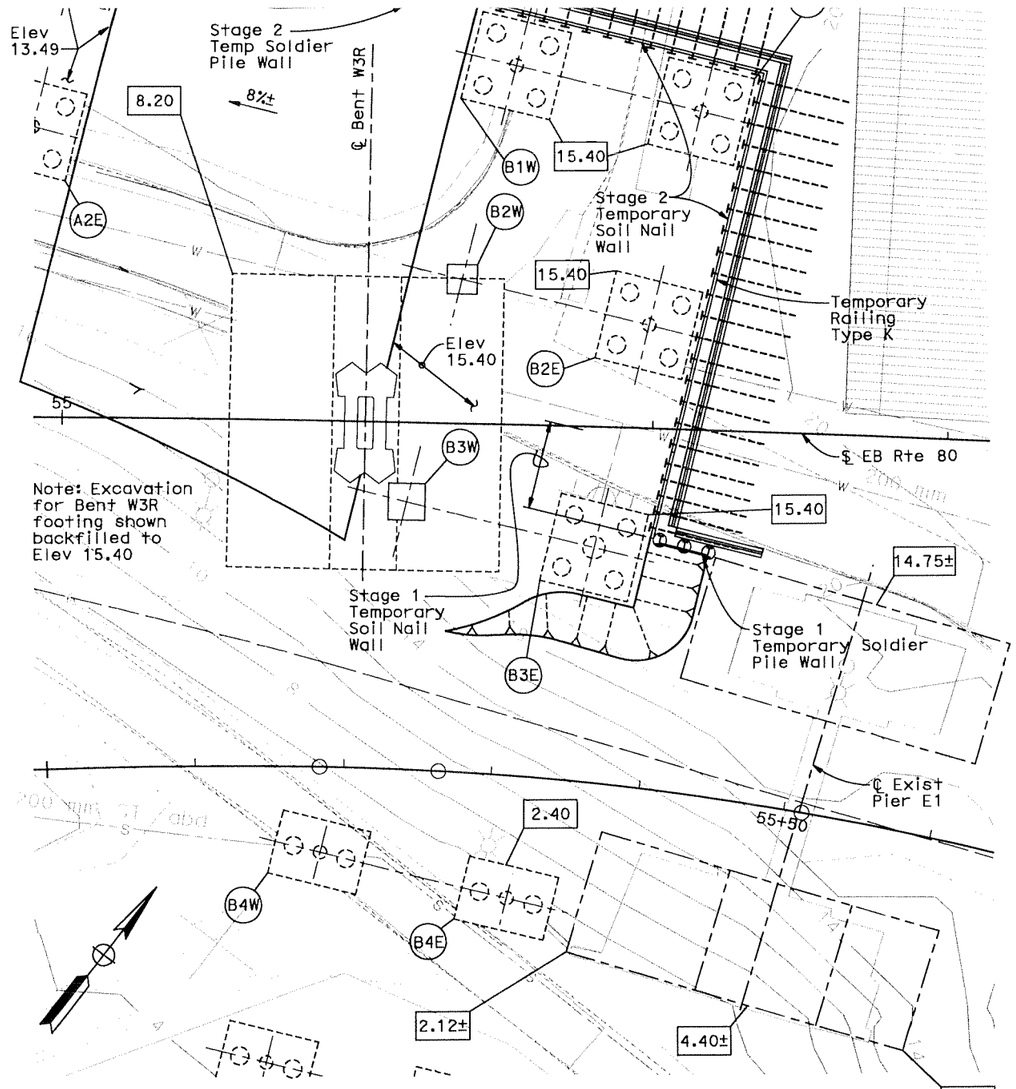

STAGE 2 FOUNDATION EXCAVATION PLAN

1:200

MARK	DATE	DESCRIPTIONS	BY	CH'D
1	3/9/09	Rev Soldier Pile Wall Layout	ALE	JNB
		REVISIONS		

SUPPLEMENTAL SHEET

CONTRACT CHANGE ORDER NO. 121-S1
SHEET 4 OF 5

ALL DIMENSIONS ARE IN MILLIMETERS UNLESS OTHERWISE SHOWN

SAN FRANCISCO OAKLAND BAY BRIDGE
EAST SPAN SEISMIC SAFETY PROJECT

YBI TRANSITION STRUCTURES

ADVANCE CONST PACKAGE NO. 1R2

STAGE 2 EXCAVATION PLAN AT BENT W3R

DESIGN OVERSIGHT
JOHN MOOK, BERNARD CHAN, JUAN F. CARPIO
SIGN OFF DATE

	BY	CHECKED
DESIGN	Lee	Birdy
DETAILS	Samson	Birdy
QUANTITIES		

PREPARED FOR THE STATE OF CALIFORNIA
DEPARTMENT OF TRANSPORTATION

Jal Birdy
PROJECT ENGINEER

BRIDGE NO.	34-0006 L/R
KILOMETER POST	12.8

CU 04251
EA 012051

DISREGARD PRINTS BEARING EARLIER REVISION DATES →

REVISION DATES (PRELIMINARY STAGE ONLY): 1/14/08 | 7/14/08 | 7/30/08 | 8/12/08 | 3/9/09

SHEET 4BR1 OF 65

Rev. Date: 5-18-98

ORIGINAL SCALE IN MILLIMETERS FOR REDUCED PLANS 0 10 20 30 40 50 60 70 80 90 100

FILE => p:\4141-06\CADD\TS\Final Const 4\Adv Const Pkg 1R2\030909\Stg 2 Fdn Exc.dgn

March 9, 2009

TIME PLOTTED => 1:14:53 PM
DATE PLOTTED => 3/10/2009
USERNAME => fsamson

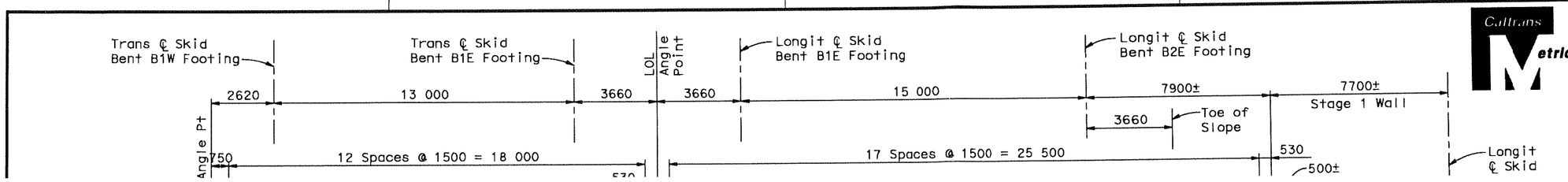

Caltrans Metric

DIST.	COUNTY	ROUTE	KILOMETER POST TOTAL PROJECT	SHEET NO.	TOTAL SHEETS
04	SF	80	12.6/13.2	60CR1	137

REGISTERED ENGINEER - CIVIL

A.L. ELY
No. 18880
Exp. 6-30-09
CIVIL
REGISTERED PROFESSIONAL ENGINEER
STATE OF CALIFORNIA

PLANS APPROVAL DATE

The State of California or its officers or agents shall not be responsible for the accuracy or completeness of electronic copies of this plan sheet.

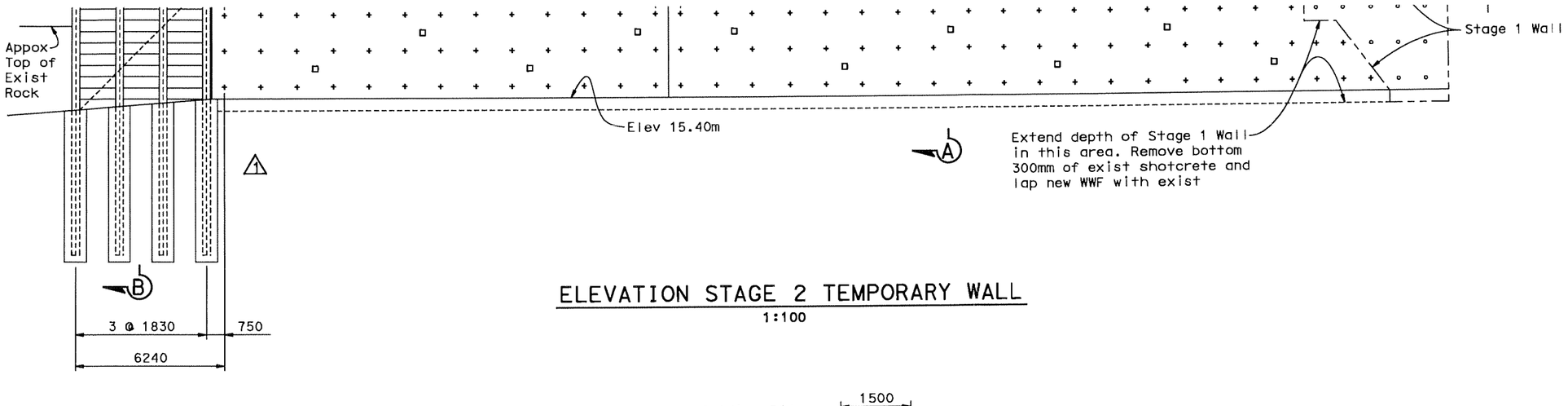

Note:
For weepholes at Soil Nail Wall,
see "Soil Nail Wall Details" sheet.

\+ Indicates location of Soil Nail Assembly

▫ Indicates location of Test Soil Nail

ELEVATION STAGE 2 TEMPORARY WALL
1:100

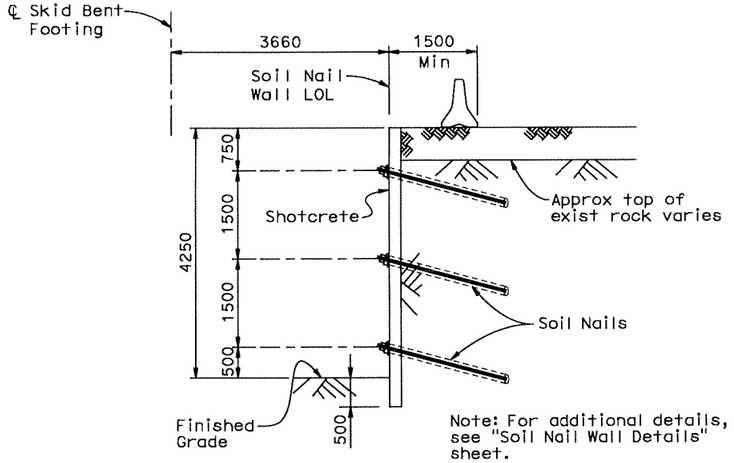

SECTION A-A
1:50

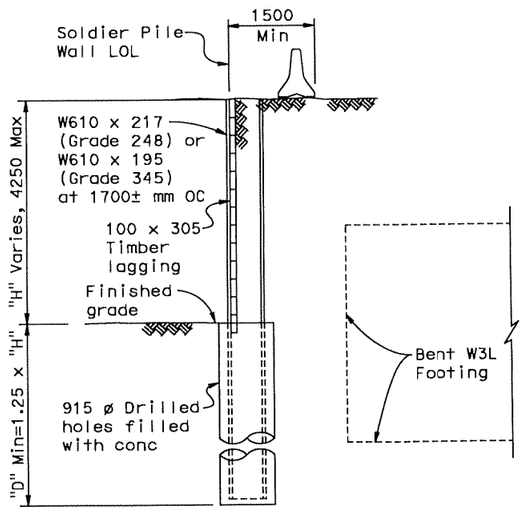

SECTION B-B
1:50

MARK	DATE	DESCRIPTIONS	BY	CH'D
1	3/9/09	Rev Soldier Pile Wall Layout	ALE	JNB
		REVISIONS		

SUPPLEMENTAL SHEET

CONTRACT CHANGE ORDER NO. 121-S1
SHEET 5 OF 5

ALL DIMENSIONS ARE IN
MILLIMETERS UNLESS OTHERWISE SHOWN

DESIGN OVERSIGHT
JOHN MOOK, BERNARD CHAN, JUAN F. CARPIO
SIGN OFF DATE

	BY	CHECKED
DESIGN	Lee	Birdy
DETAILS	Samson	Birdy
QUANTITIES		

PREPARED FOR THE
STATE OF CALIFORNIA
DEPARTMENT OF TRANSPORTATION

Jal Birdy
PROJECT ENGINEER

BRIDGE NO.	34-0006 L/R
KILOMETER POST	12.8

CU 04251
EA 0120S1

DISREGARD PRINTS BEARING EARLIER REVISION DATES →

REVISION DATES (PRELIMINARY STAGE ONLY): 1/18/08 | 7/31/08 | 7/30/08 | 8/12/08 | 3/9/09

SAN FRANCISCO OAKLAND BAY BRIDGE
EAST SPAN SEISMIC SAFETY PROJECT

YBI TRANSITION STRUCTURES
ADVANCE CONST PACKAGE NO. 1R2
STAGE 2 TEMPORARY WALL DETAILS

SHEET	OF
4CR1	65

Rev. Date: 5-18-98

ORIGINAL SCALE IN MILLIMETERS
FOR REDUCED PLANS 0 10 20 30 40 50 60 70 80 90 100

FILE => p:\4141-06\CADD\TS\Final Const 4\Adv Const Pkg 1R2\030909\Stg 2 Temp Wall Det.dgn

March 9, 2009

TIME PLOTTED => 1:15:05 PM
DATE PLOTTED => 3/10/2009
USERNAME => fsamson

STATE OF CALIFORNIA - DEPARTMENT OF TRANSPORTATION

CONTRACT CHANGE ORDER MEMORANDUM

TO: MIKE FORNER / DEANNA VILCHECK	FILE: **E.A.** 04 - 0120R4
	CO-RTE-PM SF-80-12.6/13.2
FROM: BILL CASEY	**FED. NO.** ACBRIM-080-1(097)N
CCO#: **121** SUPPLEMENT#: **1** Category Code: **CMPA**	CONTINGENCY BALANCE (incl. this change) **$71,250,500.05**
COST: **$518,130.00** INCREASE ☑ DECREASE ☐	HEADQUARTERS APPROVAL REQUIRED? ☐ YES ☑ NO
SUPPLEMENTAL FUNDS PROVIDED: **$0.00**	IS THIS REQUEST IN ACCORDANCE WITH ENVIRONMENTAL DOCUMENTS? ☑ YES ☐ NO
CCO DESCRIPTION: ETI Soil Nail Wall - Phase 2	**PROJECT DESCRIPTION:** CONSTRUCT ROUTE 80 TEMP BYPASS STRUCTURE

Original Contract Time:	Time Adj. This Change:	Previously Approved CCO Time Adjustments:	Percentage Time Adjusted: (including this change)	Total # of Unreconciled Deferred Time CCO(s): (including this change)
475 Day(s)	**0** Day(s)	**1195** Day(s)	**252** %	**7**

THIS CHANGE ORDER PROVIDES FOR:

The construction of a temporary retaining wall that will allow for the construction of a future skid bent footing for the East Tie-In structure.

This contract calls for the construction of a temporary detour for both eastbound and westbound I-80 traffic that allows for the tie in of the east span of the new San Francisco Oakland Bay Bridge (SFOBB) to Yerba Buena Island. The detour consist of three main structures, the east tie-in to the existing bridge, the west tie in to the island and the viaduct structure between the two tie ins.

The Department's December 14, 2006 Strategy memo called for the East Tie-In (ETI) structure to be constructed by rolling out the existing structure and rolling in the new detour structure in lieu of the contractor's plan to incorporate the existing structure as part of the new detour. The roll out/roll in design requires the construction of a steel skid bent structure that supports the ETI structure as it is rolled into place and the existing structure as it is rolled out.

The original Change Order No. 121 provided for the construction of Phase 1 of a temporary retaining wall that allowed for the construction of a critical footing for the skid bent structure adjacent to an existing footing of Pier E1 of the SFOBB, while limiting this project's encroachment into the adjacent SAS project's (04-0120F4) staging area. This change order provides for the construction of the reminder of the temporary wall now that the staging work of the SAS project has been completed. The construction of the temporary wall includes a 49 lineal meter section of soil nail wall along with a 6 lineal meter section of temporary soldier pile wall. Excavation costs associated with the construction of the wall are included, as well as relocation of the existing K rail, and providing and placing of additional K rail above the excavation.

Compensation shall be paid as extra work at an agreed lump sum of $518,130.00, which shall be financed from the contract's contingency funds. A cost estimate is on file.

No adjustment of contract time is warranted as the work will not affect the controlling operation.

This work was requested per memorandum from Mike Whiteside - YBI Coordination Engineer dated March 12, 2009 and concurred by Alec Melkonians - Asst. Project Manager and Hong Wong - Project Engineer.

Maintenance concurrence is not required the wall is a temporary structure and doesn't affect any permanent roadway features.

ADA Notice: For individuals with sensory disabilities, this document is available in alternate formats. For information call: (916) 654-6410 or TDD (916) 654-3880 or write Records and Forms Management, 1120 N Street, MS-89, Sacramento, CA 95814.

CONCURRED BY:			
Construction Engineer:	Bill Casey, Resident Engineer	Date	3-13-09
Bridge Engineer:	Mike Whiteside, Toll Bridge Design	Date	3/12/09
Project Engineer:	Hong Wong, PE	Date	3/11/09
Project Manager:	Alec Melkonians	Date	3/11/09
FHWA Rep.:		Date	
Environmental:		Date	
Other (specify):		Date	
Other (specify):		Date	
District Prior Approval By:		Date	
HQ (Issue Approve) By:	Bob Molera, HQ CCO Engineer	Date	
Resident Engineer's Signature:		Date	

3-13-09

ESTIMATE OF COST	THIS REQUEST	TOTAL TO DATE
ITEMS	$0.00	$0.00
FORCE ACCOUNT	$0.00	$0.00
AGREED PRICE	$518,130.00	$660,800.00
ADJUSTMENT	$0.00	$0.00
TOTAL	$518,130.00	$660,800.00

FEDERAL PARTICIPATION

☐ PARTICIPATING ☐ PARTICIPATING IN PART ☑ NONE
☐ NON-PARTICIPATING (MAINTENANCE) ☐ NON-PARTICIPATING

FEDERAL SEGREGATION (if more than one Funding Source or P.I.P. type)
☐ CCO FUNDED PER CONTRACT ☐ CCO FUNDED AS FOLLOWS

FEDERAL FUNDING SOURCE	PERCENT

ADA Notice: For individuals with sensory disabilities, this document is available in alternate formats. For information call: (916) 654-6410 or TDD (916) 654-3880 or write Records and Forms Management, 1120 N Street, MS-89, Sacramento, CA 95814.

CONTRACT CHANGE ORDER

Change Requested by: Engineer

CCO 123	Suppl. No. 0	Contract No. 04 - 0120R4	Road SF-80-12.6/13.2	FED. AID LOC.: ACBRIM-080-1(097)N

To: CC MYERS INC

You are directed to make the following changes from the plans and specifications or do the following described work not included in the plans and specifications for this contract. ***NOTE: This change order is not effective until approved by the Engineer.***

Description of work to be done, estimate of quantities and prices to be paid. (Segregate between additional work at contract price, agreed price and force account.) Unless otherwise stated, rates for rental of equipment cover only such time as equipment is actually used and no allowance will be made for idle time. This last percentage shown is the net accumulated increase or decrease from the original quantity in the Engineer's Estimate.

Extra Work at Force Account:

As authorized by the Engineer, enter into a lease with the Treasure Island Development Authority (TIDA) for the parcel of land at the corner of Avenue H and 9th Street in order to stockpile excavated soil from the East Tie-In, West Tie-In and Bent W7 foundation construction.

Provide for all soil testing prior to transporting the soil to the stockpile and perform all stockpile maintenance as determined by the Engineer.

Transport and store materials to the stockpile site in order to provide access to the work of the East Tie-In, West Tie-In and Bent W7 construction as determined by the Engineer.

Costs to perform water pollution control in accordance with Section 10-1.02 'Water Pollution Control', of the Special Provisions and all approved Storm Water Pollution Prevention Plan (SWPPP) Amendments to date will be compensated for under separate change order.

Estimated cost of Extra Work at Force Account $600,000.00

Estimated Cost: Increase ☑ Decrease ☐ **$600,000.00**

By reason of this order the time of completion will be adjusted as follows: 0 days

Submitted by

Signature	Resident Engineer BILL CASEY	Date 3-17-08

Approval Recommended by

Signature	Area Construction Manager DENNIS TURCHON	Date 3/18/08

Engineer Approval by

Signature	Area Construction Manager DENNIS TURCHON	Date 4/17/08

We the undersigned contractor, have given careful consideration to the change proposed and agree, if this proposal is approved, that we will provide all equipment, furnish the materials, except as may otherwise be noted above, and perform all services necessary for the work above specified, and will accept as full payment therefor the prices shown above.

NOTE: If you, the contractor, do not sign acceptance of this order, your attention is directed to the requirements of the specifications as to proceeding with the ordered work and filing a written protest within the time therein specified.

Contractor Acceptance by

Signature	(Print name and title) DANIEL E. HAMICK, PRESIDENT	Date 4/11/08

STATE OF CALIFORNIA - DEPARTMENT OF TRANSPORTATION

CONTRACT CHANGE ORDER MEMORANDUM

RECEIVED DATE: 3/4/2008

007648 JUN 20 08

TO: MIKE FORNER / DENNIS TURCHON	FILE: E.A. 04 - 0120R4 CO-RTE-PM SF-80-12.6/13.2 FED. NO. ACBRIM-080-1(097)N
FROM: BILL CASEY	
CCO#: **123** SUPPLEMENT#: **0** Category Code: **BZZZ**	CONTINGENCY BALANCE (incl. this change) **$73,298,284.82**
COST: **$600,000.00** INCREASE ☑ DECREASE ☐	HEADQUARTERS APPROVAL REQUIRED? ☑ YES ☐ NO
SUPPLEMENTAL FUNDS PROVIDED: **$0.00**	IS THIS REQUEST IN ACCORDANCE WITH ENVIRONMENTAL DOCUMENTS? ☑ YES ☐ NO
CCO DESCRIPTION: Treasure Island Yard Rental Lot	**PROJECT DESCRIPTION:** CONSTRUCT ROUTE 80 TEMP BYPASS STRUCTURE

Original Contract Time:	Time Adj. This Change:	Previously Approved CCO Time Adjustments:	Percentage Time Adjusted: (including this change)	Total # of Unreconciled Deferred Time CCO(s): (including this change)
475 Day(s)	**0** Day(s)	**1195** Day(s)	**252** %	**7**

THIS CHANGE ORDER PROVIDES FOR:

The lease of a stockpile site adjacent to the project.

This contract provides for the construction of a temporary detour for both eastbound and westbound I-80 traffic that allows for the tie in of the east span of the new San Francisco Oakland Bay Bridge (SFOBB) to Yerba Buena Island. The detour will allow for the construction of the permanent structure, the Yerba Buena Island Transition Structure, which connects the signature SAS structure to Yerba Buena Island.

The detour consist of three main structures, the East Tie-In (ETI) to the bridge, the West Tie-In (WTI) to the island and the viaduct structure between the two tie ins. The contract was awarded as a performance based project with the contractor responsible for meeting the design criteria specified in the contract.

Two separate Department strategy memos, dated December 14, 2006 and December 25, 2006 and both approved by Tony Anziano, Toll Bridge Program Manager, Richard Land, Chief Engineer and subsequently the TBPOC, recommended that the Department assume the design responsibility for the ETI and WTI structures and recommended the advance construction, within this contract, of numerous foundation and columns from the Yerba Buena Island Transition Structure contract that will follow the completion of this project.

The assumption of the design responsibility and the added foundations work will result in the additional excavation of approximately 18,000 cubic meters of soil during the 2008 construction season with most of this soil required for backfill after the foundation work has been completed. The changes have also consumed all of the contractor's planned storage areas within the project limits.

This change order is being issued in order to mitigate costs resulting from these changes. The contractor shall lease a stockpile area adjacent to the project site that will allow for the material to be stored and then used as backfill. Without this stockpile site, the excavated material would have to be trucked to a landfill and then additional material would have to be purchased to provide for the required backfill material. Leasing the stockpile site to store the material will result in a significant cost savings to the Department.

In addition to the cost of leasing the parcel, the cost of stockpile maintenance and required soil testing shall be paid under this change order. Construction materials may also be transported and stored on the site in order to improve access to the construction area. The parcel shall provide approximately 2 acres of storage area and is anticipated to be leased through the summer or fall of 2009 depending on the completion of the work associated with the backfill operations. The quoted monthly lease price has been determined to be in line with typical leased properties in the area.

Costs to perform water pollution control in accordance with Section 10-1.02 'Water Pollution Control', of the Special Provisions and all approved Storm Water Pollution Prevention Plan (SWPPP) Amendments to date will be compensated for under separate change order.

The work shall be performed as extra work at force account at an estimated cost of $600,000.00 and shall be financed from the contract's contingency funds. A cost analysis is on file.

ADA Notice: For individuals with sensory disabilities, this document is available in alternate formats. For information call: (916) 654-6410 or TDD (916) 654-3880 or write Records and Forms Management, 1120 N Street, MS-89, Sacramento, CA 95814.

No adjustment of contract time is warranted as the work will not affect the controlling operation.

This change was concurred by Alec Melkonians - Asst. Project Manager.

Maintenance concurrence is not required as this change order will not affect any permanent roadway features.

CONCURRED BY:		
Construction Engineer:	Raoul Maltez, Senior TE (Rm)	Date 3/19/08
Bridge Engineer:		Date
Project Engineer:		Date
Project Manager:	Alec Melkonians	Date 3/5/08
FHWA Rep.:		Date
Environmental:		Date
Other (specify):		Date
Other (specify):		Date
District Prior Approval By:		Date
HQ (Issue Approve) By:	Ken Darby, HQ CCO Engineer	Date
Resident Engineer's Signature:		Date
		3-17-08

ESTIMATE OF COST

	THIS REQUEST	TOTAL TO DATE
ITEMS	$0.00	$0.00
FORCE ACCOUNT	$600,000.00	$600,000.00
AGREED PRICE	$0.00	$0.00
ADJUSTMENT	$0.00	$0.00
TOTAL	$600,000.00	$600,000.00

FEDERAL PARTICIPATION

☐ PARTICIPATING ☐ PARTICIPATING IN PART ☐ NONE
☐ NON-PARTICIPATING (MAINTENANCE) ☑ NON-PARTICIPATING

FEDERAL SEGREGATION (if more than one Funding Source or P.I.P. type)
☑ CCO FUNDED PER CONTRACT ☐ CCO FUNDED AS FOLLOWS

FEDERAL FUNDING SOURCE	PERCENT

ADA Notice: For individuals with sensory disabilities, this document is available in alternate formats. For information call: (916) 654-6410 or TDD (916) 654-3880 or write Records and Forms Management, 1120 N Street, MS-89, Sacramento, CA 95814.

STATE OF CALIFORNIA - DEPARTMENT OF TRANSPORTATION

CONTRACT CHANGE ORDER

Change Requested by: Engineer

CCO 123	Suppl. No. 1	Contract No. 04 - 0120R4	Road SF-80-12.6/13.2	FED. AID LOC.: ACBRIM-080-1(097)N

To: CC MYERS INC

You are directed to make the following changes from the plans and specifications or do the following described work not included in the plans and specifications for this contract. ***NOTE: This change order is not effective until approved by the Engineer.***

Description of work to be done, estimate of quantities and prices to be paid. (Segregate between additional work at contract price, agreed price and force account.) Unless otherwise stated, rates for rental of equipment cover only such time as equipment is actually used and no allowance will be made for idle time. This last percentage shown is the net accumulated increase or decrease from the original quantity in the Engineer's Estimate.

Extra Work at Force Account:

Provide additional funds.

Estimated cost of Extra Work at Force Account $350,000.00

Estimated Cost: Increase ☑ Decrease ☐ **$350,000.00**

By reason of this order the time of completion will be adjusted as follows: 0 days

Submitted by

Signature	Resident Engineer BILL CASEY	Date 10-3-09

Approval Recommended by

Signature Deanna Vilcheck	Area Construction Manager DEANNA VILCHECK	Date 10/7/09

Engineer Approval by

Signature Deanna Vilcheck	Area Construction Manager DEANNA VILCHECK	Date 10/26/09

We the undersigned contractor, have given careful consideration to the change proposed and agree, if this proposal is approved, that we will provide all equipment, furnish the materials, except as may otherwise be noted above, and perform all services necessary for the work above specified, and will accept as full payment therefor the prices shown above.

NOTE: If you, the contractor, do not sign acceptance of this order, your attention is directed to the requirements of the specifications as to proceeding with the ordered work and filing a written protest within the time therein specified.

Contractor Acceptance by

Signature N/A	(Print name and title) N/A	Date N/A

STATE OF CALIFORNIA - DEPARTMENT OF TRANSPORTATION

CONTRACT CHANGE ORDER MEMORANDUM

TO: MIKE FORNER / DEANNA VILCHECK	FILE: E.A. 04 - 0120R4
FROM: BILL CASEY	CO-RTE-PM SF-80-12.6/13.2
	FED. NO.
CCO#: 123 SUPPLEMENT#: 1 Category Code: BZZZ	CONTINGENCY BALANCE (incl. this change) $54,915,400.59
COST: $350,000.00 INCREASE ☑ DECREASE ☐	HEADQUARTERS APPROVAL REQUIRED? ☑ YES ☐ NO
SUPPLEMENTAL FUNDS PROVIDED: $0.00	IS THIS REQUEST IN ACCORDANCE WITH ENVIRONMENTAL DOCUMENTS? ☑ YES ☐ NO
CCO DESCRIPTION: TI Lot Rental - Additional Funds	PROJECT DESCRIPTION: CONSTRUCT ROUTE 80 TEMP BYPASS STRUCTURE

Original Contract Time:	Time Adj. This Change:	Previously Approved CCO Time Adjustments:	Percentage Time Adjusted: (including this change)	Total # of Unreconciled Deferred Time CCO(s): (including this change)
475 Day(s)	0 Day(s)	1195 Day(s)	252 %	7

THIS CHANGE ORDER PROVIDES FOR:

Additional funds for the lease of a stockpile site adjacent to the project.

This project, the Yerba Buena Island Detour (YBID), calls for the construction of a temporary detour for both eastbound and westbound I-80 traffic that will allow for the tie in of the new east span of the San Francisco Oakland Bay Bridge to Yerba Buena Island. The YBID encompasses three main structures, the East Tie-In to the existing bridge, the West Tie-In (WTI) to Yerba Buena Island, and the Viaduct structure between the two tie ins. The contract was awarded as a performance-based project with the contractor responsible for meeting the design criteria specified in the contract.

Two separate Department strategy memorandums issued on December 14, 2006 entitled 'Strategy for South-South Detour Contract Completion' and December 25, 2006 entitled 'Recommendation to Construct Select Yerba Buena Island Transition Structure Foundations by Contract Change Order' were approved by Tony Anziano - Toll Bridge Program Manager, Richard Land - Chief Engineer, and the Toll Bridge Program Oversight Committee (TBPOC), which recommended the design of the ETI and WTI structures and enhancement of the Viaduct be assumed by the Department as opposed to the as-bid performance based contractor design and that a portion of the YBITS foundation work be performed under this contract by change order.

The original change order calls for the lease of a stockpile site adjacent to the project, which is needed as a result of additional excavation of approximately 18,000 cubic meters of soil during the 2008 construction season. Consequently, the changes have also consumed all of the Contractor's planned storage areas within the project limits.

Since all the funds have been depleted on this change, it is therefore proposed a Supplemental No. 1 be processed to pay all outstanding extra work bills in the holding file and additional excavation yet to be stockpiled during the 2009 construction season.

It is anticipated that additional funds of $350,000.00 will cover all the remaining work due to this change, which can be financed from the Contract's contingency fund.

Contractor's signature is not required on Extra Work at Force Account request for additional funds change order, therefore, it is proposed to process this change unilaterallly.

No adjustment of contract time is warranted as the work will not affect the controlling operation.

Alec Melkonians, Asst. Project Manager and Hong Wong, Project Engineer, both concurred with this change.

Maintenance concurrence is not required as this change order will not affect any permanent roadway features.

ADA Notice: For individuals with sensory disabilities, this document is available in alternate formats. For information call: (916) 654-6410 or TDD (916) 654-3880 or write Records and Forms Management, 1120 N Street, MS-89, Sacramento, CA 95814

CONCURRED BY:		
Construction Engineer:	Bill Casey, Resident Engineer	Date 10-3-09
Bridge Engineer:		Date
Project Engineer:	Hong Wong, PE	Date 9/22/09
Project Manager:	Alec Melkonians	Date 9/10/09
FHWA Rep.:		Date
Environmental:		Date
Other (specify):		Date
Other (specify):		Date
District Prior Approval By:		Date
HQ (Issue Approve) By:	Bob Molera, HQ CCO Engineer	Date
Resident Engineer's Signature:		Date 10-3-09

ESTIMATE OF COST

	THIS REQUEST	TOTAL TO DATE
ITEMS	$0.00	$0.00
FORCE ACCOUNT	$350,000.00	$950,000.00
AGREED PRICE	$0.00	$0.00
ADJUSTMENT	$0.00	$0.00
TOTAL	$350,000.00	$950,000.00

FEDERAL PARTICIPATION

☐ PARTICIPATING ☐ PARTICIPATING IN PART ☑ NONE
☐ NON-PARTICIPATING (MAINTENANCE) ☐ NON-PARTICIPATING

FEDERAL SEGREGATION (if more than one Funding Source or P.I.P. type)
☐ CCO FUNDED PER CONTRACT ☐ CCO FUNDED AS FOLLOWS

FEDERAL FUNDING SOURCE	PERCENT

ADA Notice: For individuals with sensory disabilities, this document is available in alternate formats. For information call: (916) 654-6410 or TDD (916) 654-3880 or write Records and Forms Management, 1120 N Street, MS-89, Sacramento, CA 95814.

STATE OF CALIFORNIA - DEPARTMENT OF TRANSPORTATION

CONTRACT CHANGE ORDER

Change Requested by: Engineer

CCO 124	Suppl. No. 0	Contract No. 04 - 0120R4	Road SF-80-12.6/13.2	FED. AID LOC.: ACBRIM-080-1(097)N

To: **CC MYERS INC**

You are directed to make the following changes from the plans and specifications or do the following described work not included in the plans and specifications for this contract. ***NOTE: This change order is not effective until approved by the Engineer.***

Description of work to be done, estimate of quantities and prices to be paid. (Segregate between additional work at contract price, agreed price and force account.) Unless otherwise stated, rates for rental of equipment cover only such time as equipment is actually used and no allowance will be made for idle time. This last percentage shown is the net accumulated increase or decrease from the original quantity in the Engineer's Estimate.

Perform all the work as shown on the plans from Sheet No. 2 through 8 of this change order for the installation of grounding interface at Columns W3R & W4R and at Columns of Bents W5, W6, and W7 of the Yerba Buena Island Transition Structure (YBITS).

Extra Work at Force Account:

Provide payment for miscellaneous support work in this change including but not limited to reconstruction of pavement structural section and installing temporary trench plates for public traffic use.

Estimated cost of Extra Work at Force Account $40,000.00

Extra Work at Lump Sum:

Compensate the Contractor for the installation of grounding interface at various columns as stated above.

For this work, the Contractor shall be compensated at a lump sum of $313,975.00. The work includes installing grounding conductors & pullboxes, dirt trenching, backfiling, and compaction. This sum constitutes full and final compensation, including all markups, for all costs associated with the work of this change.

Payment for reconstruction of pavement structural section and installing temporary trench plates for public use will be paid for in a separate payment method under this change.

Total cost of Extra Work at Lump Sum $313,975.00

Flagging costs associated with this work shall be paid under Change Order No. 1 with these costs being paid at 50% by the Department. The remaining flagging costs are considered to be included in the lump sum payments made under this change order.

Estimated Cost: **Increase** ☑ **Decrease** ☐ **$353,975.00**

By reason of this order the time of completion will be adjusted as follows: 0 days

Submitted by

Signature	Resident Engineer	Date
	BILL CASEY	10-9-08

Approval Recommended by

Signature	Area Construction Manager	Date
Deanna Vilcheck	DEANNA VILCHECK	10/10/08

Engineer Approval by

Signature	Area Construction Manager	Date
Deanna Vilcheck	DEANNA VILCHECK	11/25/08

We the undersigned contractor, have given careful consideration to the change proposed and agree, if this proposal is approved, that we will provide all equipment, furnish the materials, except as may otherwise be noted above, and perform all services necessary for the work above specified, and will accept as full payment therefor the prices shown above.

NOTE: If you, the contractor, do not sign acceptance of this order, your attention is directed to the requirements of the specifications as to proceeding with the ordered work and filing a written protest within the time therein specified.

Contractor Acceptance by

Signature	(Print name and title)	Date
	DANIEL E. Hinrick, PRESIDENT	11/19/08

DIST	COUNTY	ROUTE	KILOMETER POST TOTAL PROJECT	SHEET NO	TOTAL SHEETS
04	SF	80	12.6/13.2		

REGISTERED ELECTRICAL ENGINEER — DATE 1/18/08

S. A. ESTOQUE, JR. — REGISTERED PROFESSIONAL ENGINEER — No. E-10151 — Exp. 12/31/2008 ELECTRICAL — STATE OF CALIFORNIA

PLANS APPROVAL DATE

PB POWER, Inc.
A Parsons Brinckerhoff Company
303 Second St., Suite 700N
San Francisco, CA 94107-1317

The State of California or its officers or agents shall not be responsible for the accuracy or completeness of electronic copies of this plan sheet.

Caltrans now has a web site! To get to the web site, go to http://www.dot.ca.gov

DRAWING INDEX

E-1 Electrical Index, Symbols, Notes and Abbreviations

E-2 Bent W7 Grounding Interface

E-3 Bent W7 Typical Pier Grounding Detail

E-4 Bent W7 Conduit Location and Section

SYMBOLS

(See ES-1A and ES-1B for Additional Standard Symbols)

LAYOUT PLAN

- Conduit turned up
- Conduit turned down
- Conduit or Cable run, exposed
- Conduit run concealed in wall, concrete barrier, slab or routed underground duct bank
- Ground Bare Copper Wire, Stranded
- Cable To Cable Exothermic Type Ground Connections
- Cable Ground Connection to Equipment, Compression Type
- Cable with Pigtail Ground Connections (see plan for length)

CONDUIT RUN IDENTIFICATION

1/001

- Location
  - 0-Underground Plan
  - 1, 4 and 6-Westbound Plan
  - 2, 5 and 7-Eastbound Plan
  - 8-Navigation Plan
  - 9-Seismic Plan
  - 3-Suspension Cable Plan
  - X-Utility Tunnel Plan
- Assigned Sequential Number

ABBREVIATIONS

SEE ES-1A AND ES-1B FOR ADDITIONAL ABBREVIATIONS

A, AMP	Ampere
AC	Alternating Current
AF	Ampere Frame Rating
AH	Ampere Hour
AT	Ampere Trip Rating
AUX	Auxiliary
BKR	Breaker
CB	Call Box
COM	Communication
CON	Control
Cont'd	Continued
CPT	Control Power Transformer
CUB	Cubicle
CU	Copper
DPDT	Double Pole Double Throw
DC	Direct Current
DISC, Disc	Disconnect
(E), Exist	Existing
FSK	Frequency shift key
G, GND, Gnd	Ground
GPS	Global Positioning System
GRS	Galvanized Rigid Steel
HID	High Intensity Discharge
HV	High Voltage
HZ, Hz	Hertz
IND, Ind	Indication
JB	Junction Box
kAIC	KiloAmperes Interrupting Capacity
kcmil	Kilo Circular Mil
kV	Kilovolt
kW	Kilowatt
kVA	KiloVolt Ampere
LP	Lighting Panel
LTS, Lts	Lights
LVCC	Low Voltage Control Center
MH	Mounting Height or Manhole
MVA	Mega Volt Ampere
NAP	Navigation Lighting Relay Cabinet
PH	Phase
PTSS	Power Transfer Selector Sw.
PWR	Power
RGS	Rigid Galvanized Steel
RMS	Root Mean Square
PLC	Programmable Logic Controller
RTU	Remote Terminal Unit
SCADA, Scada	Supervisory Control And Data Acquisition
SFOBB	San Francisco Oakland Bay Bridge
SG	System Ground
Shld, SHLD	Shield
SMD	Strong Motion Detection
SSC	Seismic Sensor Cable
SWGR, Swgr	Switchgear
SW	Switch
TEL	Telephone
TB	Terminal Box
Term	Terminal
TSH	Temperature Switch, Thermostat
TOC	Top of Concrete
TOS	Traffic Operations System
Tr	Triad
UNO, UON	Unless Otherwise Noted
UP	Utility Panel
UV	Undervoltage
V	Volt
VAC	Volts Alternating Current
VCB	Vacuum Circuit Breaker
VDC	Volts Direct Current
VM	Voltmeter
VS	Voltmeter Switch
W	Wire
WP	Weatherproof
YBI	Yerba Buena Island

GENERAL NOTES

1. All electrical work shall conform to the State of California Department of Transportation 1999 Standard Specifications and 2004 Standard Plans. For any conflict or this general notes, State Guidelines applies.
2. Conduit routing is diagrammatic. Exact locations may be adjusted depending on field conditions and approval by the Resident Engineer.
3. All drawing sheets are accurate for electrical work only.
4. All dimensions are in millimeters unless otherwise shown.

CONTRACT NO. 04-0120R4

CONTRACT CHANGE ORDER NO 124

SHEET 2 OF 8

ELECTRICAL INDEX, SYMBOLS, NOTES AND ABBREVIATIONS

NO SCALE

E-1R1

STATE OF CALIFORNIA - DEPARTMENT OF TRANSPORTATION — Caltrans

DESIGN OVERSIGHT: BEHZAD COLEMOHAMMADI

CALCULATED/DESIGNED BY | CHECKED BY

DATE | REVISED BY | DATE REVISED

LAST REVISION 00-00-00 — DATE PLOTTED => 1/24/2008 — TIME PLOTTED => $TIME

FOR REDUCED PLANS ORIGINAL SCALE IS IN MILLIMETERS 0 20 40 60 80

DGN FILE => T:\13103\SouthDetour\YBI - Advanced Duct Bank Work\CCO-75\40120ua001.dgn
USERNAME => $USER

CU 04251 EA 0120R1

NOTES:

1. For other related work, not shown on this sheet, see Electrical Special Provisions.

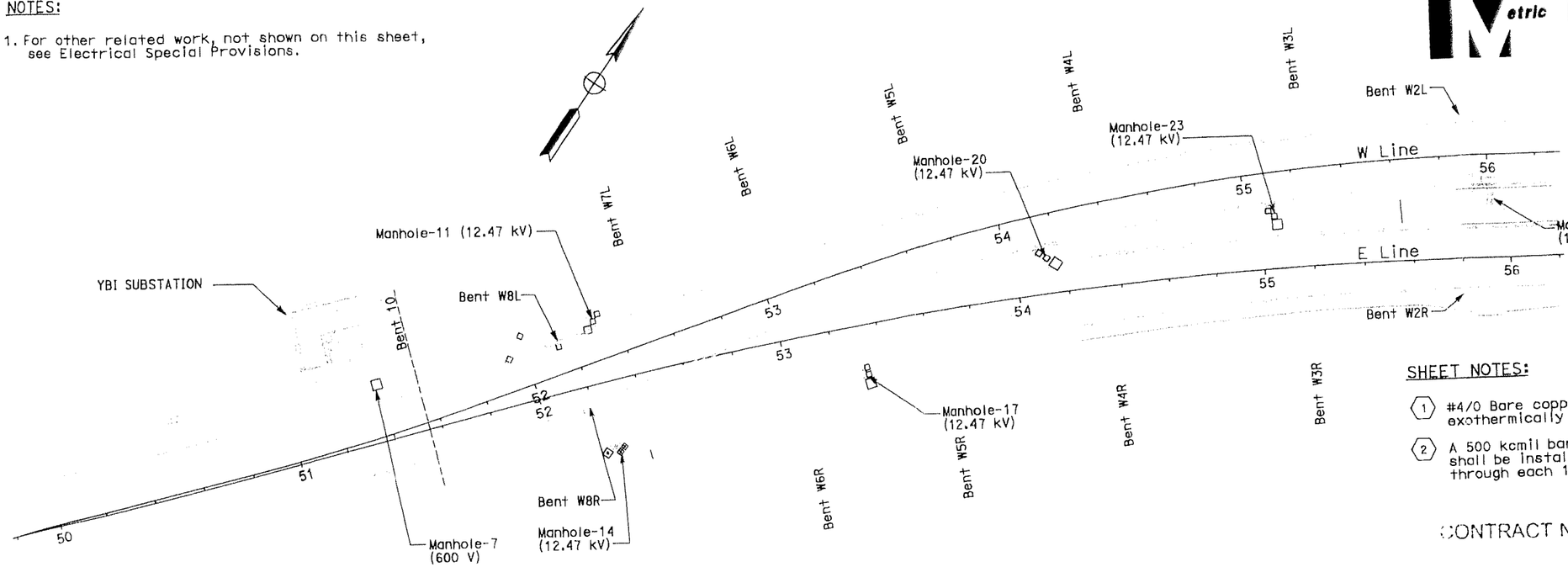

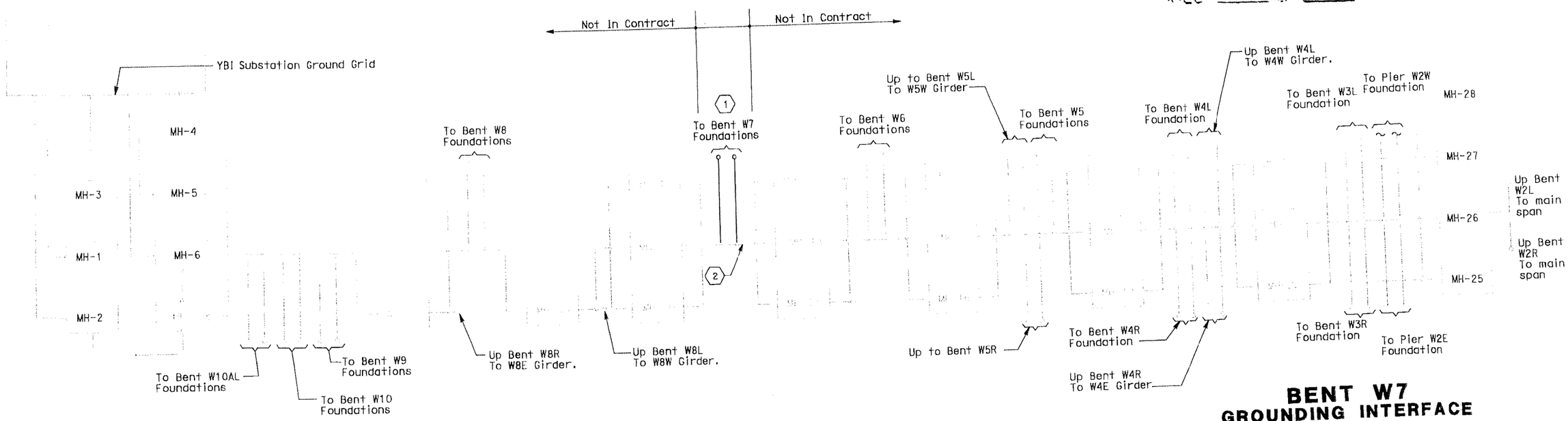

BENT W7
GROUNDING INTERFACE
SCALE: 1:1000

SHEET NOTES:

(1) #4/0 Bare copper grounding conductors shall be exothermically welded to foundation rebars.

(2) A 500 kcmil bare copper system grounding conductor shall be installed in the 15 kV duct bank and continue through each 12.47 kV manhole.

DIST	COUNTY	ROUTE	KILOMETER POST TOTAL PROJECT	SHEET No	TOTAL SHEETS
04	SF	80	12.6/13.2		

REGISTERED ELECTRICAL ENGINEER — 1/16/08 DATE

REGISTERED PROFESSIONAL ENGINEER — S. A. ESTOQUE, JR. — No. E-10151 — EXP. 12/31/2008 ELECTRICAL — STATE OF CALIFORNIA

PLANS APPROVAL DATE

PB POWER, Inc.
A Parsons Brinckerhoff Company
303 Second St., Suite 700N
San Francisco, CA 94107-1317

The State of California or its officers or agents shall not be responsible for the accuracy or completeness of electronic copies of this plan sheet.

Caltrans now has a web site! To get to the web site, go to http://www.dot.ca.gov

CONTRACT NO. 04-0120R4

CONTRACT CHANGE ORDER NO. 124

SHEET 3 OF 8

CONTRACT CHANGE ORDER NO. ___ ___
SHEET ___ OF ___

E-2

DATE	REVISED BY	DATE REVISED
CALCULATED/ DESIGNED BY	CHECKED BY	

DESIGN OVERSIGHT — BEHZAD GOLEMOHAMMADI

STATE OF CALIFORNIA - DEPARTMENT OF TRANSPORTATION — Caltrans

LAST REVISION — DATE PLOTTED => 1/18/2008 TIME PLOTTED => 9TIME

FOR REDUCED PLANS ORIGINAL SCALE IS IN MILLIMETERS 0 20 40 60 80

DGN FILE => t:\13103\southdetour\ybi - advanced duct bank work\ccb-75\40120rua002.dgn
USERNAME => $USER

CU 04251 EA 0120R1

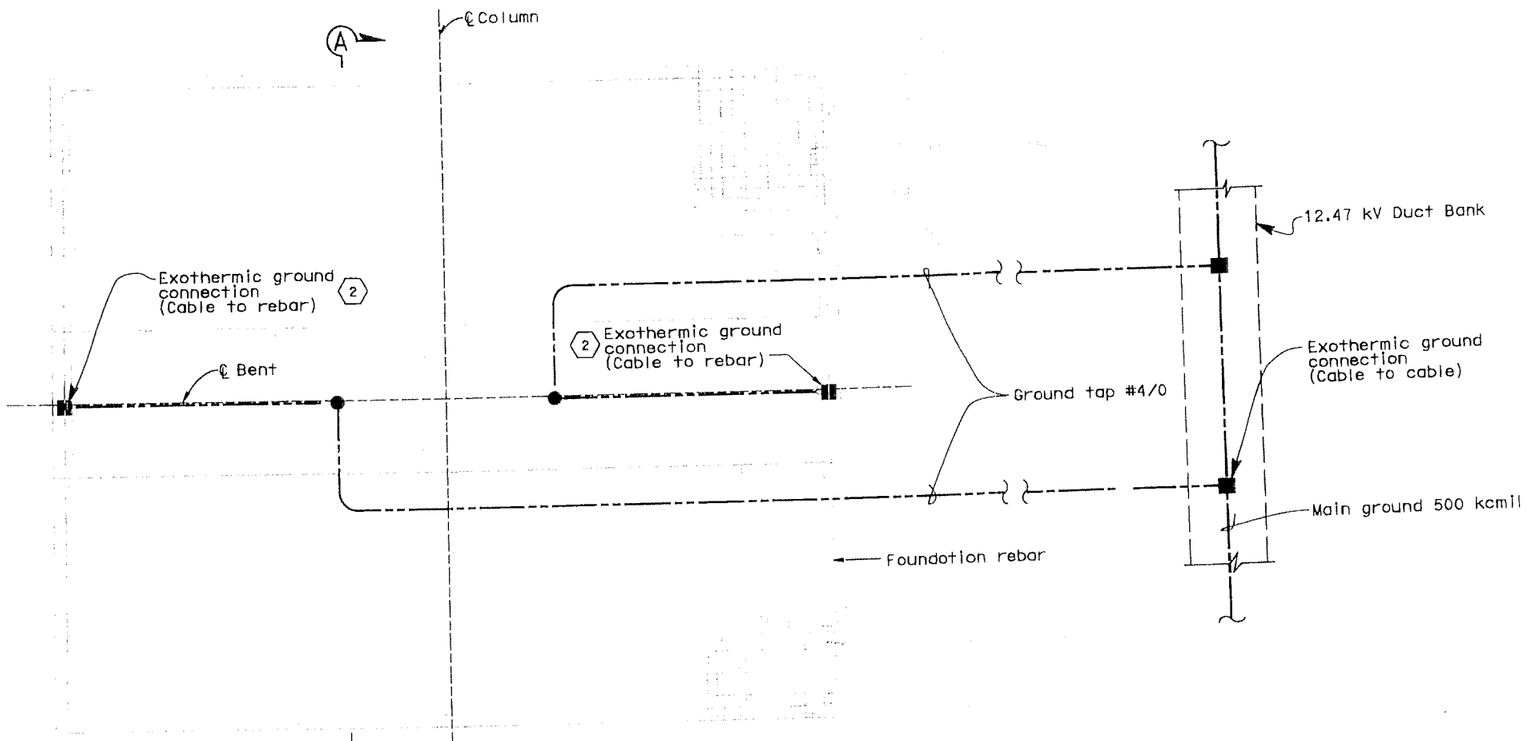

FOUNDATION PIER COLUMN-GROUNDING PLAN
(TYPICAL EACH PIER - EXCEPT AS NOTED)
SCALE 1:80

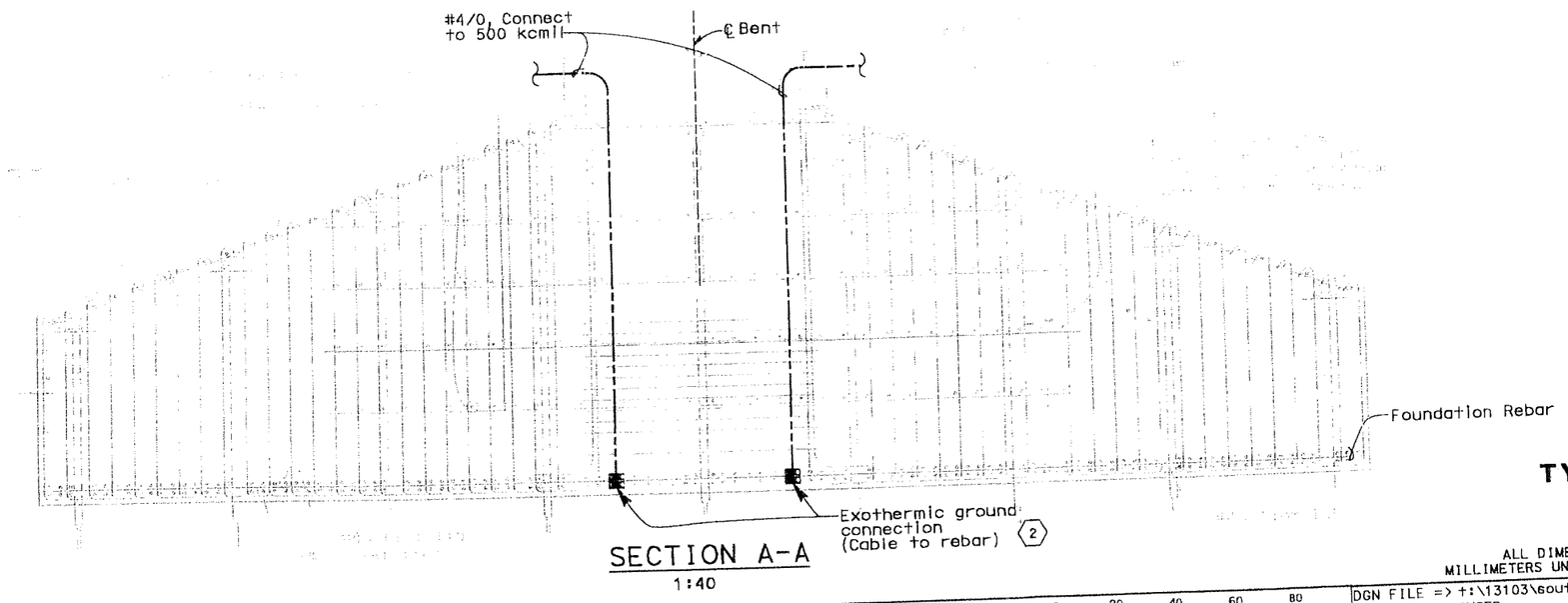

SECTION A-A
1:40

NOTES:

1. Layout plan is shown diagramatic.

SHEET NOTES:

(1) Typical ground conductor connection to foundation column rebar. Minimum connections from system ground shall be two.

(2) If the rebar is coated, the Contractor to expose the steel for exothermic connection. The Contractor shall sealed or taped to cover ground connection. The seal or tape shall be of the same material of the coated steel.

DIST	COUNTY	ROUTE	KILOMETER POST TOTAL PROJECT	SHEET No	TOTAL SHEETS
04	SF	80	12.6/13.2		

REGISTERED ELECTRICAL ENGINEER — 1/18/08 DATE

PLANS APPROVAL DATE

S. A. ESTOCLE — No. E-10151 — Exp. 12/31/2008 — ELECTRICAL — REGISTERED PROFESSIONAL ENGINEER — STATE OF CALIFORNIA

PB POWER, inc.
A Parsons Brinckerhoff Company
303 Second St., Suite 700N
San Francisco, CA 94107-1317

The State of California or its officers or agents shall not be responsible for the accuracy or completeness of electronic copies of this plan sheet.

Caltrans now has a web site! To get to the web site, go to http://www.dot.ca.gov

CONTRACT NO. 04-0120R4

CONTRACT CHANGE ORDER NO 124

SHEET 4 OF 8

CONTRACT CHANGE ORDER NO. ___ —
SHEET ___ OF ___

BENT W7
TYPICAL PIER GROUNDING DETAIL
SCALE AS SHOWN

E-3

STATE OF CALIFORNIA - DEPARTMENT OF TRANSPORTATION
Caltrans

DESIGN OVERSIGHT: Behzad Golemohammadi

CALCULATED/ DESIGNED BY
CHECKED BY

DATE	REVISED BY	DATE REVISED

LAST REVISION DATE PLOTTED => 1/18/2008

ALL DIMENSIONS ARE IN MILLIMETERS UNLESS OTHERWISE SHOWN

FOR REDUCED PLANS ORIGINAL SCALE IS IN MILLIMETERS
0 20 40 60 80

DGN FILE => t:\13103\southdetour\ybi - advanced duct bank work\cco-75\40120rua003.dgn
USERNAME => $USER

CU 04251 EA 0120R1

DIST	COUNTY	ROUTE	KILOMETER POST TOTAL PROJECT	SHEET No	TOTAL SHEETS
04	SF	80	12.6/13.2		

REGISTERED ELECTRICAL ENGINEER — DATE 1/18/08

PLANS APPROVAL DATE

REGISTERED PROFESSIONAL ENGINEER — S. A. ESTOQUE, JR. — No. E-10151 — Exp. 12/31/2009 — ELECTRICAL — STATE OF CALIFORNIA

PB POWER, Inc.
A Parsons Brinckerhoff Company
303 Second St., Suite 700N
San Francisco, CA 94107-1317

The State of California or its officers or agents shall not be responsible for the accuracy or completeness of electronic copies of this plan sheet.

Caltrans now has a web site! To get to the web site, go to http://www.dot.ca.gov

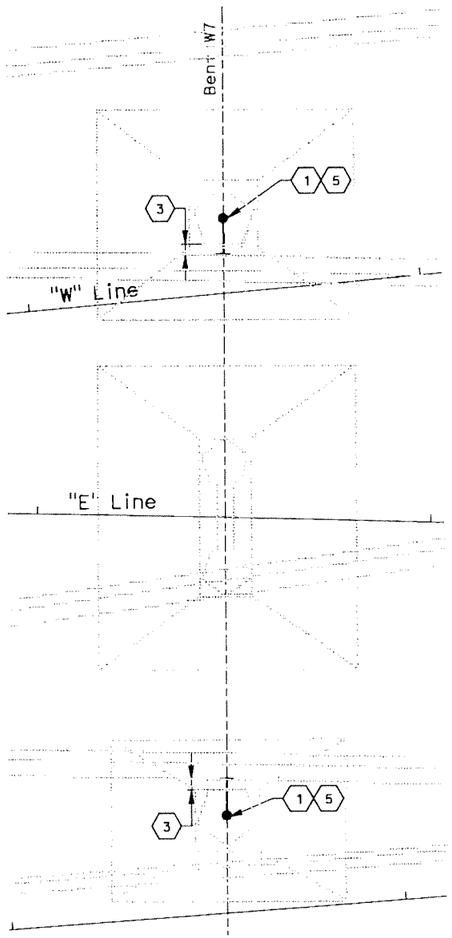

PLAN
SCALE: 1:15

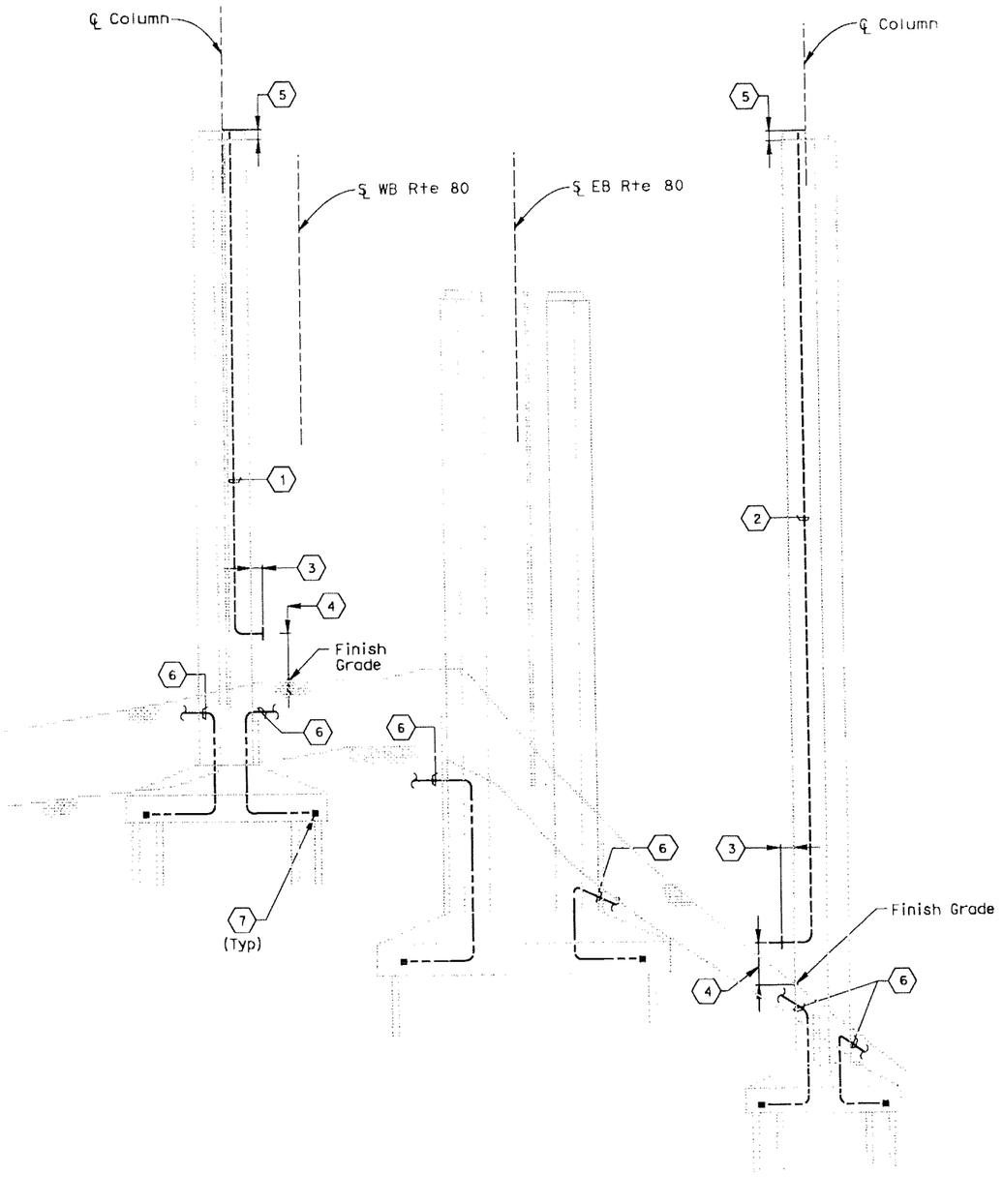

SHEET NOTES:

1. Conduit inside pier column shall be 27 mm rigid galvanized steel conduit. Conduit number shall be 9/209
2. Conduit inside pier column shall be 27mm rigid galvanized steel conduit. Conduit number shall be 9/210
3. Extend conduit minimum 150 mm from exterior face of the pier column. Exposed conduit shall be rigid galvanized steel, PVC coated. Contractor to plug and cap end of conduit.
4. Location of conduit shall be 410 mm from finish grade.
5. Extend conduit 150 mm outside the concrete. Contractor to plug and cap end of conduit.
6. Ground conductor tap to foundation rebar shall be #4/0 bare copper wire, for connection to system ground.
7. Exothermic connection to foundation rebar. See typical pier grounding detail sheet E-3.

CONTRACT NO. 04-0120R4

CONTRACT CHANGE ORDER NO 124

SHEET 5 OF 8

CONTRACT CHANGE ORDER NO. ___ ___
SHEET ___ OF ___

BENT W7
CONDUIT LOCATION AND ELEVATION

E-4R2

DESIGN OVERSIGHT: BEHZAD GOLEMOHAMMADI

CALCULATED/DESIGNED BY | CHECKED BY

DATE | REVISED BY | DATE REVISED

STATE OF CALIFORNIA - DEPARTMENT OF TRANSPORTATION — Caltrans

DATE PLOTTED => 1/24/2008
TIME PLOTTED => 10:03:32 AM
LAST REVISION 00-00-00

FOR REDUCED PLANS ORIGINAL SCALE IS IN MILLIMETERS 0 20 40 60 80

DGN FILE => T:\13103\SouthDetour\YBI - Advanced Duct Bank Work\CCO-75\40120rua004.dgn
USERNAME => llorico

CU 04251 EA 0120R1

DIST	COUNTY	ROUTE	KILOMETER POST TOTAL PROJECT	SHEET No	TOTAL SHEETS
04	SF	80	12.6/13.2	48R1	137

REGISTERED ELECTRICAL ENGINEER — 11/03/06 DATE

REGISTERED PROFESSIONAL ENGINEER — JENS ERLINGSSON No. 8249 Exp. 9/30/08 ELECTRICAL — STATE OF CALIFORNIA

PLANS APPROVAL DATE

PB POWER, Inc.
A Parsons Brinckerhoff Company
303 Second St., Suite 700N
San Francisco, CA 94107-1317

The State of California or its officers or agents shall not be responsible for the accuracy or completeness of electronic copies of this plan sheet.

Caltrans now has a web site! To get to the web site, go to http://www.dot.ca.gov

Caltrans Metric

NOTES:

1. References:
   - For duct banks and manholes, see sheets E-8 through E-12.
   - For transition structure girder westbound grounding plan, see sheet E-80.
   - For transition structure girder eastbound grounding plan, see sheet E-130.
2. For other related work, not shown on this sheet, see Electrical Special Provisions.

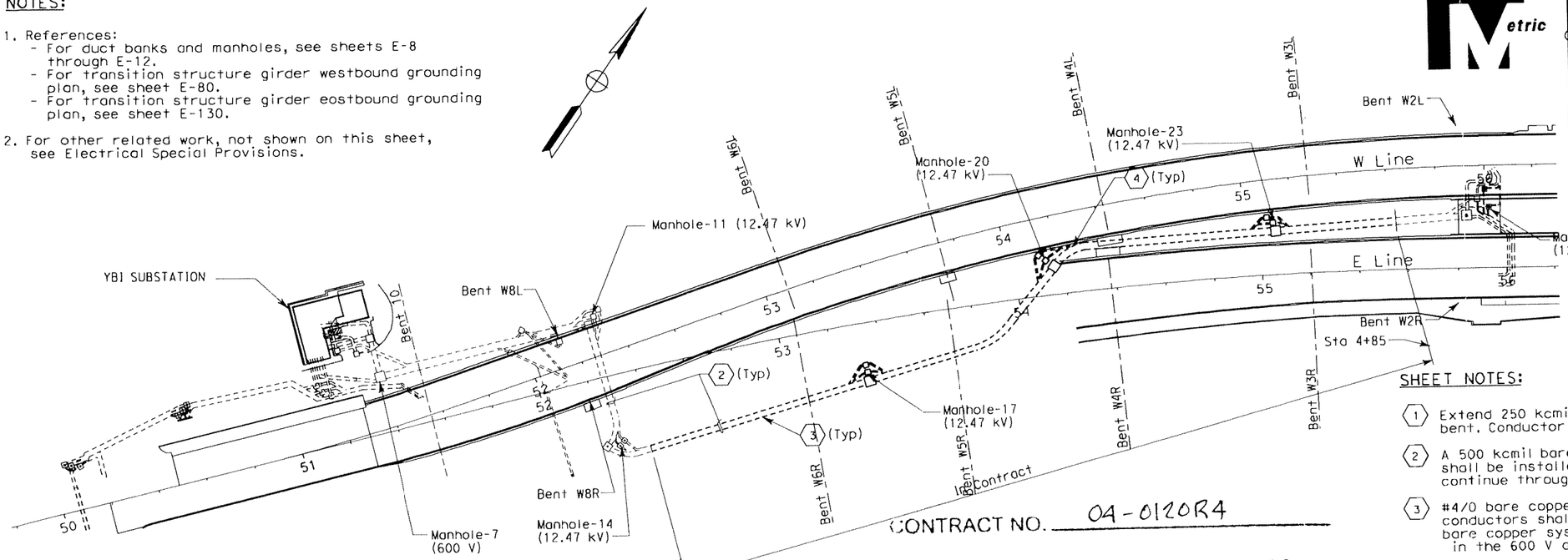

CONTRACT NO. 04-0120R4

CONTRACT CHANGE ORDER NO 124

SHEET 6 OF 8

SHEET NOTES:

1. Extend 250 kcmil grounding conductor 4 m towards bent. Conductor shall be burried 762 mm below grade.
2. A 500 kcmil bare copper system grounding conductor shall be installed in the 15 kV duct bank and continue through each 12.47 kV manhole.
3. #4/0 bare copper grounding conductors shall be exothermically welded to the 500 kcmil bare copper system grounding conductor and installed in the 600 V and TOS/COM duct banks and manholes.
4. For typical manhole grounding, see sheet E-13.
5. Leave 1 m pig tail for future extension.
6. #4/0 Bare copper grounding conductors shall be exothermically welded to foundation rebars.

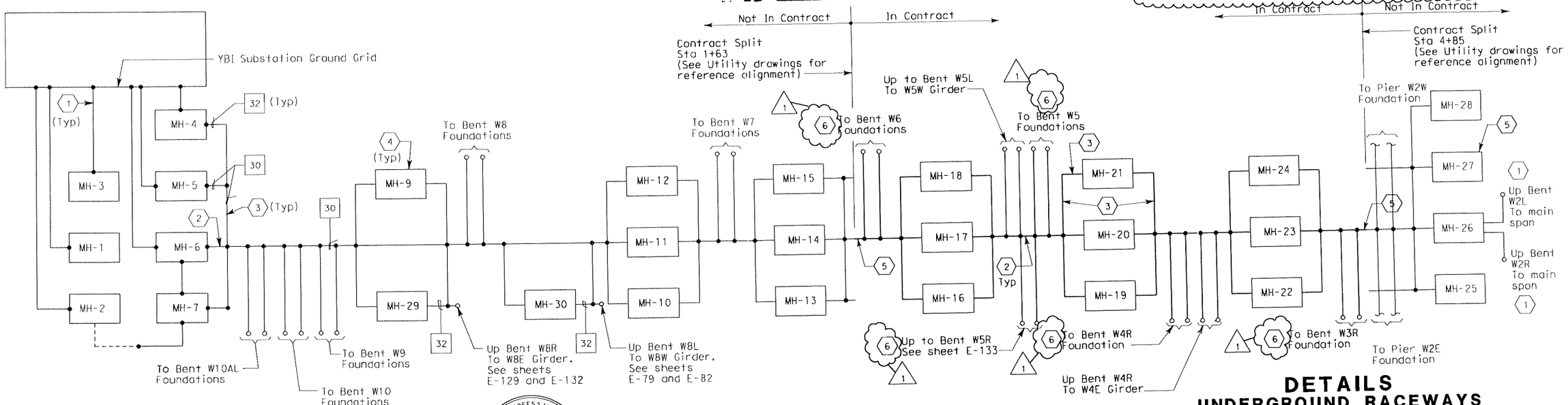

DETAILS
UNDERGROUND RACEWAYS GROUNDING INTERFACE

SCALE: 1:1000

REGISTERED PROFESSIONAL ENGINEER — S. A. ESTOQUE, JR. No. E-10151 Exp. 12/31/2008 ELECTRICAL — STATE OF CALIFORNIA

SUPPLEMENT SHEET

1 CONTRACT CHANGE ORDER NO. ____

SHEET ____ OF ____

E-14

STATE OF CALIFORNIA - DEPARTMENT OF TRANSPORTATION — Caltrans

DESIGN OVERSIGHT — BEHZAD GOLEMOHAMMADI

CALCULATED/ DESIGNED BY | CHECKED BY

DATE	REVISED BY	DATE REVISED

LAST REVISION 00-00-00 — DATE PLOTTED => 9/29/2008 TIME PLOTTED => 9:12:32 AM

FOR REDUCED PLANS ORIGINAL SCALE IS IN MILLIMETERS — 0 20 40 60 80

DGN FILE => T:\13103\SouthDetour\CCO Advanced Duct Bank Work\CCO-64\40120rua014R1.dgn
USERNAME =>ricafrente

CU 04251 — EA 0120R1

DIST	COUNTY	ROUTE	KILOMETER POST TOTAL PROJECT	SHEET No	TOTAL SHEET
04	SF	80	12.6/13.2	48S1	137

REGISTERED ELECTRICAL ENGINEER DATE

PLANS APPROVAL DATE

REGISTERED PROFESSIONAL ENGINEER S. A. ESTOQUE JR. No. E-10151 Exp. 12/31/2009 ELECTRICAL STATE OF CALIFORNIA

PB POWER, Inc.
A Parsons Brinckerhoff Company
303 Second St., Suite 700N
San Francisco, CA 94107-1317

The State of California or its officers or agents shall not be responsible for the accuracy or completeness of electronic copies of this plan sheet.

Caltrans now has a web site! To get to the web site, go to http://www.dot.ca.gov

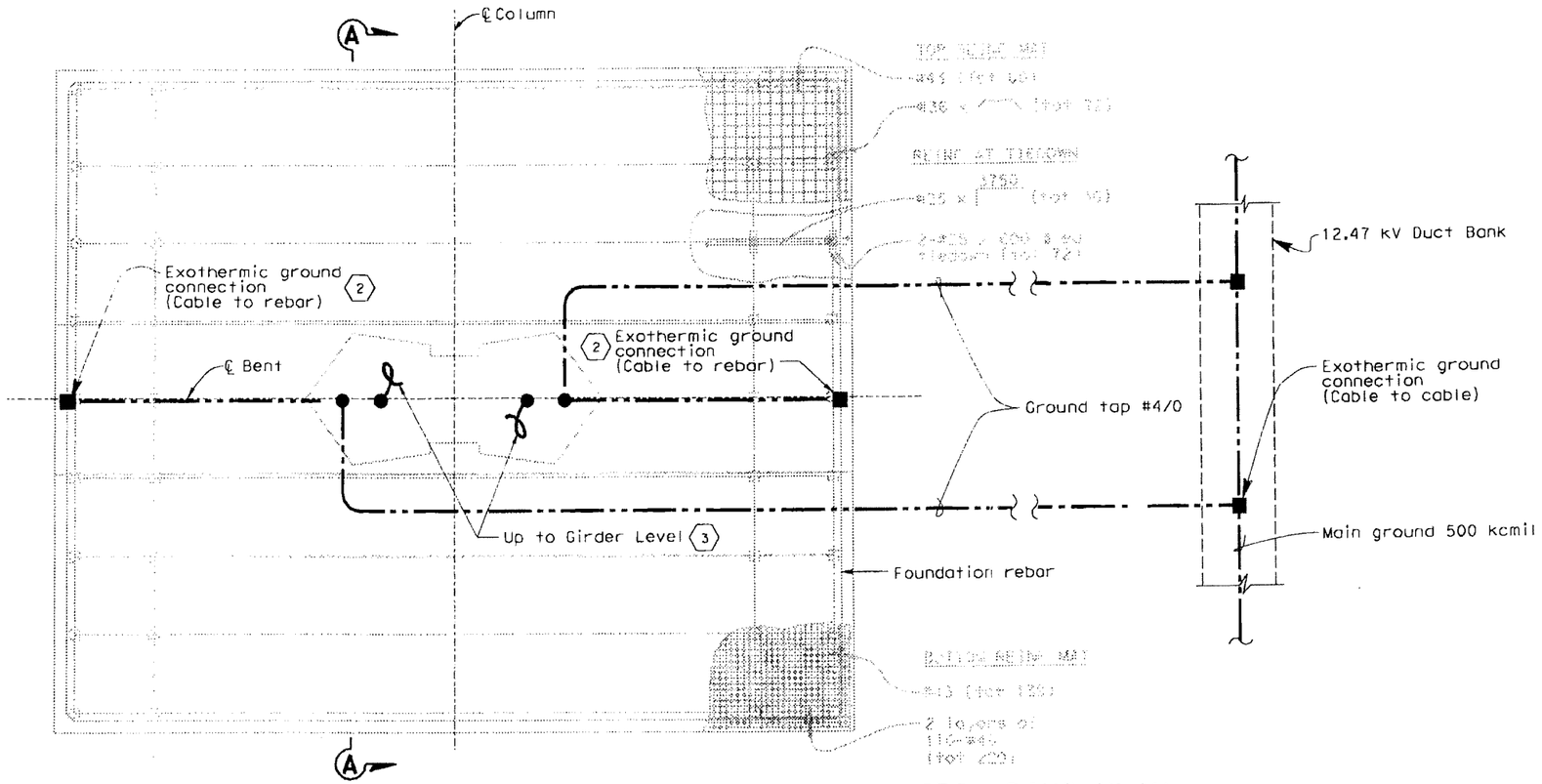

FOUNDATION PIER COLUMN-GROUNDING PLAN

(TYPICAL EACH PIER - EXCEPT AS NOTED)

SCALE 1:80

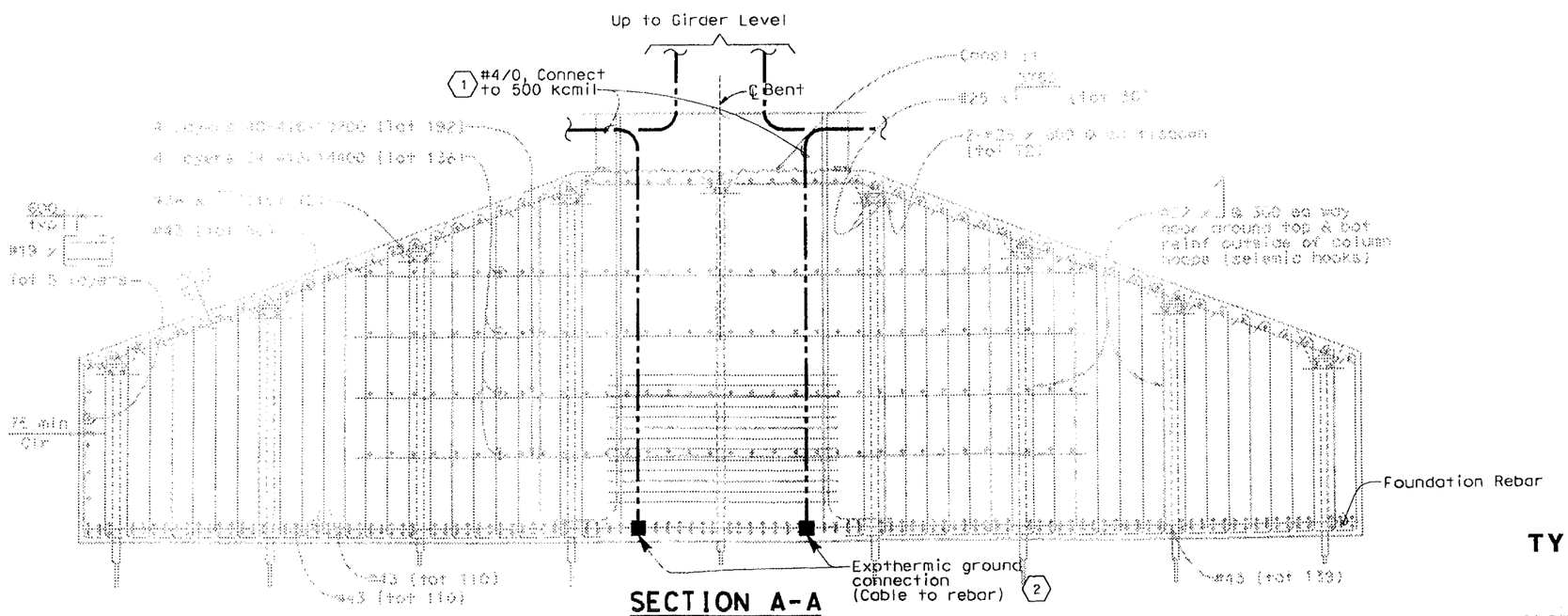

SECTION A-A

1:40

NOTES:

1. Layout plan is shown diagramatic.

SHEET NOTES:

1. Typical ground cable connection to foundation column rebar. Minimum connections from system ground shall be two.
2. If the rebar is coated, the Contractor to expose the steel for exothermic connection. The Contractor shall sealed or taped to cover ground connection. The seal or tape shall be of the same material of the coated steel.
3. #250 kcmil ground cable, for connection up to girder level. Contractor to coil 1000 mm long of ground cable. Final connection by others. See sheet E-14 for bent locations.

CONTRACT NO. 04-0120R4

CONTRACT CHANGE ORDER NO 124

SHEET 7 OF 8

SUPPLEMENT SHEET

CONTRACT CHANGE ORDER NO. _____

SHEET _____ OF _____

DETAILS
UNDERGROUND RACEWAYS
TYPICAL PIER GROUNDING DETAIL

SCALE AS SHOWN

ALL DIMENSIONS ARE IN MILLIMETERS UNLESS OTHERWISE SHOWN

E-14A

STATE OF CALIFORNIA - DEPARTMENT OF TRANSPORTATION

Caltrans

DESIGN OVERSIGHT

Behzad Golemohammadi

CALCULATED/ DESIGNED BY	DATE	REVISED BY	DATE REVISED
CHECKED BY			

DIST	COUNTY	ROUTE	KILOMETER POST TOTAL PROJECT	SHEET No	TOTAL SHEET
04	SF	80	12.7/13.2	48S2	137

REGISTERED ELECTRICAL ENGINEER DATE

PLANS APPROVAL DATE

PB POWER, Inc.
A Parsons Brinckerhoff Company
303 Second St., Suite 700N
San Francisco, CA 94107-1317

REGISTERED PROFESSIONAL ENGINEER S. A. ESTOQUE, JR. No. E-10151 Exp. 12/31/2008 ELECTRICAL STATE OF CALIFORNIA

The State of California or its officers or agents shall not be responsible for the accuracy or completeness of electronic copies of this plan sheet.

Caltrans now has a web site! To get to the web site, go to http://www.dot.ca.gov

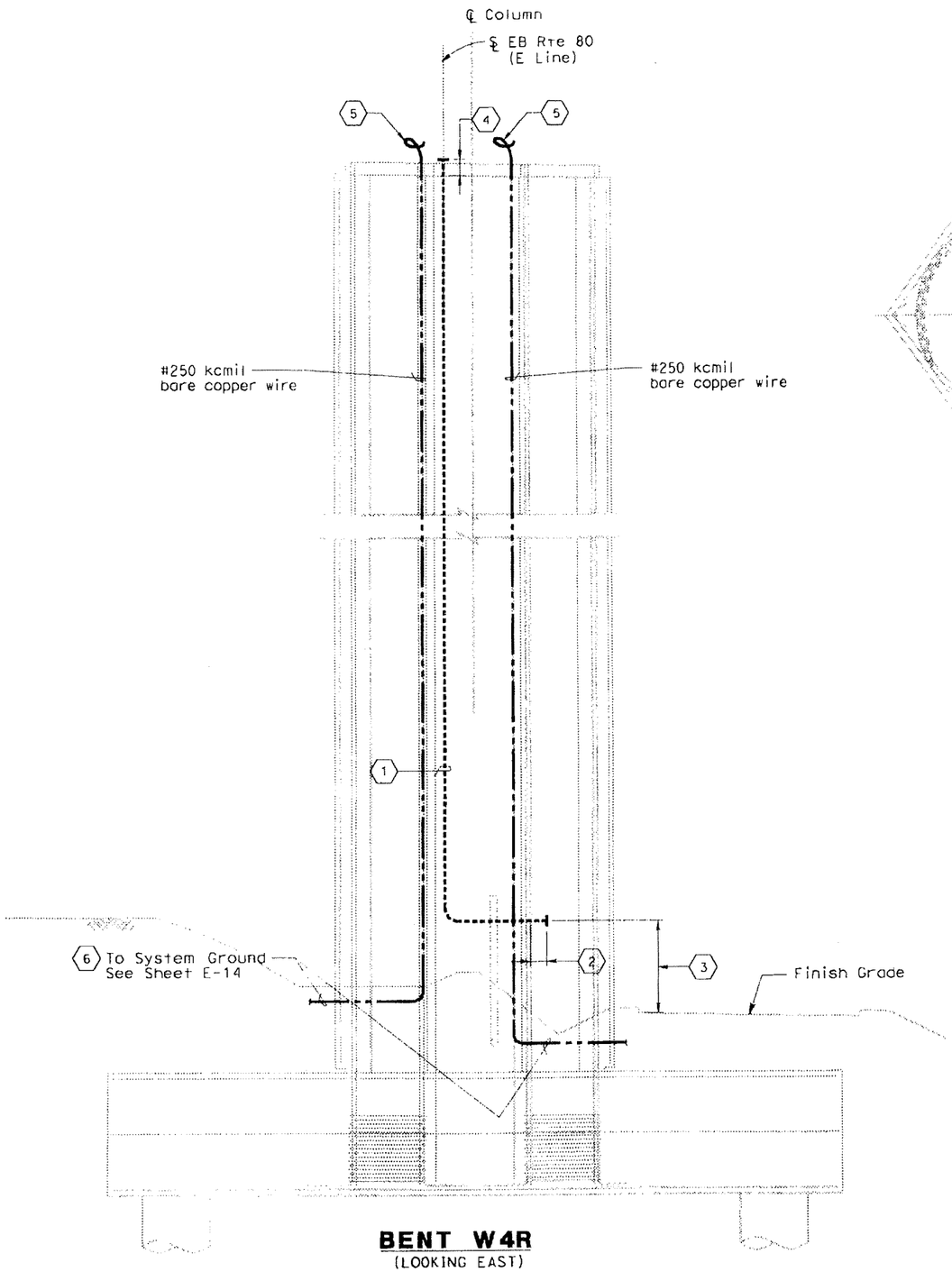

BENT W4R
(LOOKING EAST)
ELEVATION
SCALE: 1:100

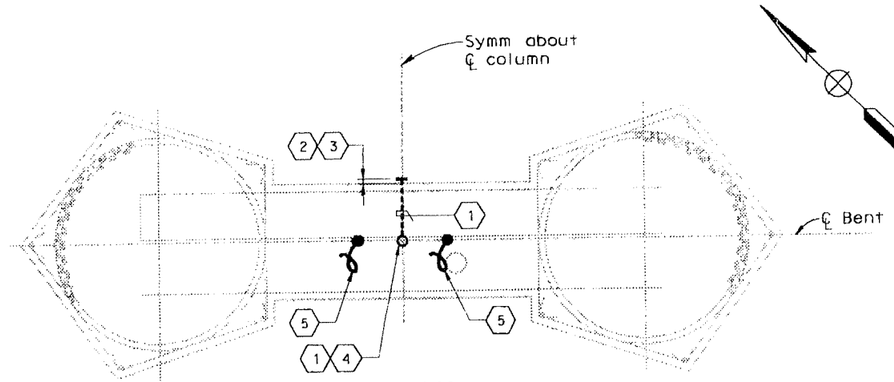

PLAN
SCALE: 1:40

CONTRACT NO. 04-0120R4

CONTRACT CHANGE ORDER NO 124

SHEET 8 OF 8

SUPPLEMENT SHEET
CONTRACT CHANGE ORDER NO. _____
SHEET _____ OF _____

NOTES:

1. For other related work not shown on this drawing, see Electrical Provisions.

SHEET NOTES:

1. Conduit inside pier column shall be 27 mm rigid galvanized steel conduit. Conduit number shall be 9208.
2. Extend conduit minimum 150 mm from exterior face of pier column. Exposed conduit shall be rigid galvanized steel, PVC coated. Contractor to plug and cap the end of conduit.
3. Location of conduit shall be 410 mm above finish grade.
4. Extend conduit 150 mm outside the concrete. Contractor to plug and cap end of the conduit.
5. Coil 1000 mm long of ground cable. Final connection by others.

DETAILS
UNDERGROUND RACEWAYS
PIER W4 CONDUIT LOCATION
SCALE: AS NOTED

E-14B

STATE OF CALIFORNIA - DEPARTMENT OF TRANSPORTATION
Caltrans

DESIGN OVERSIGHT: BEHZAD GOLEMOHAMMADI
CALCULATED/DESIGNED BY: IAH
CHECKED BY: AB
DATE
REVISED BY
DATE REVISED

STATE OF CALIFORNIA - DEPARTMENT OF TRANSPORTATION

CONTRACT CHANGE ORDER MEMORANDUM

DATE: 10/6/2008 Page 1 of 1

TO: MIKE FORNER / DEANNA VILCHECK

FROM: BILL CASEY

FILE: E.A. 04 - 0120R4
CO-RTE-PM SF-80-12.6/13.2
FED. NO. ACBRIM-080-1(097)N

CCO#: 124 SUPPLEMENT#: 0 Category Code: ~~CXPC~~ CBPC

CONTINGENCY BALANCE (incl. this change) **$85,198,779.12**

COST: **$353,975.00** INCREASE ☑ DECREASE ☐

HEADQUARTERS APPROVAL REQUIRED? ☑ YES ☐ NO

SUPPLEMENTAL FUNDS PROVIDED: **$0.00**

IS THIS REQUEST IN ACCORDANCE WITH ENVIRONMENTAL DOCUMENTS? ☑ YES ☐ NO

CCO DESCRIPTION:
Electrical Grounding Work

PROJECT DESCRIPTION:
CONSTRUCT ROUTE 80 TEMP BYPASS STRUCTURE

Original Contract Time:	Time Adj. This Change:	Previously Approved CCO Time Adjustments:	Percentage Time Adjusted: (including this change)	Total # of Unreconciled Deferred Time CCO(s): (including this change)
475 Day(s)	0 Day(s)	1195 Day(s)	252 %	7

THIS CHANGE ORDER PROVIDES FOR:

The installation of grounding interface at Column W3R & W4R and at Columns of Bents W5, W6, and W7 of the Yerba Island Transition Structure (YBITS).

This project, the Temporary Bypass Structure (TBS), was awarded in March 2004 to construct a detour that will allow for the tie in of the new east span of the San Francisco Oakland Bay Bridge to Yerba Buena Island. The TBS encompasses three main structures, the East Tie-In (ETI) to the existing bridge, the West Tie-In (WTI) to Yerba Buena Island, and the Viaduct structure between the two tie ins.

The Department issued a December 25, 2006 memo entitled "Recommendation to Construct Select Yerba Buena Island Transition Structure (YBITS) Foundations by Contract Change Order to the Contractor performing on this contract. Construction of this work at this time will greatly mitigate corridor schedule risk to the San Francisco-Oakland bay Bridge (SFOBB) East Span Project and is in the best interest of the Department and the public. This foundation work requires the installation of grounding interface at various bents to fulfill the Department's goal to achive SFOBB seismic safety as soon as possible.

Compensation for the grounding work shall be paid for as Extra Work at an Agreed Lump Sum price of $313,975.00 and at Extra Work at Force Account of $40,000.00 to pay for miscellaneous support work to include but not limited to reconstruction of pavement structural section and installing temporary trench plates for public use. Both costs can be financed from the contract's contingency funds. A cost analysis is on file.

No adjustment of contract time is warranted as the change will not affect the controlling operation.

Trinh Lai, Project Engineer, requested this change order per Memorandum dated January 18, 2008.

CONCURRED BY:

Construction Engineer:	Bill Casey, Resident Engineer	Date 10-9-08
Bridge Engineer:		Date
Project Engineer:	Trinh Lai, Toll Bridge Design	Date 1/18/08
Project Manager:	Alec Melkonians	Date 10/29/08
FHWA Rep.:		Date
Environmental:		Date
Other (specify):		Date
Other (specify):		Date
District Prior Approval By:		Date
HQ (Issue Approve) By:	Bob Molera, HQ CCO Engineer	Date 10/16/08
Resident Engineer's Signature:		Date 10-9-08

ESTIMATE OF COST

	THIS REQUEST	TOTAL TO DATE
ITEMS	$0.00	$0.00
FORCE ACCOUNT	$0.00	$0.00
AGREED PRICE	$353,975.00	$353,975.00
ADJUSTMENT	$0.00	$0.00
TOTAL	$353,975.00	$353,975.00

FEDERAL PARTICIPATION

☐ PARTICIPATING ☐ PARTICIPATING IN PART ☐ NONE
☐ NON-PARTICIPATING (MAINTENANCE) ☑ NON-PARTICIPATING

FEDERAL SEGREGATION (if more than one Funding Source or P.I.P. type)
☐ CCO FUNDED PER CONTRACT ☐ CCO FUNDED AS FOLLOWS

FEDERAL FUNDING SOURCE	PERCENT

ADA Notice: For individuals with sensory disabilities, this document is available in alternate formats. For information call: (916) 654-6410 or TDD (916) 654-3880 or write Records and Forms Management, 1120 N Street, MS-89, Sacramento, CA 95814.

STATE OF CALIFORNIA - DEPARTMENT OF TRANSPORTATION

CONTRACT CHANGE ORDER

Change Requested by: Engineer

CCO: 124	Suppl. No. 1	Contract No. 04 - 0120R4	Road SF-80-12.6/13.2	FED. AID LOC.:

To: CC MYERS INC

You are directed to make the following changes from the plans and specifications or do the following described work not included in the plans and specifications for this contract. ***NOTE: This change order is not effective until approved by the Engineer.***

Description of work to be done, estimate of quantities and prices to be paid. (Segregate between additional work at contract price, agreed price and force account.) Unless otherwise stated, rates for rental of equipment cover only such time as equipment is actually used and no allowance will be made for idle time. This last percentage shown is the net accumulated increase or decrease from the original quantity in the Engineer's Estimate.

Modify the size of the conduit inside the pier column of Bent W7 of the Yerba Buena Island Transition Structure (Br. No. 34-0006L/R) to 41 mm as noted (Note 1) on Page No. 2 (Plan Sheet E4R3) of this change order.

Adjustment of Compensation at Lump Sum:

Provide compensation to the Contractor for all additional costs incurred due to the modifications to the conduit incorporated under this change order. For this work, the Contractor shall be compensated an agreed lump sum of $1,100.00 which constitutes full and final compensation, including all markups, for all additional costs incurred.

Cost of Adjustment of Compensation at Lump Sum $1,100.00

Estimated Cost: Increase ☑ Decrease ☐ $1,100.00

By reason of this order the time of completion will be adjusted as follows: 0 days

Submitted by		
Signature Jeannie Balderrama	Resident Engineer JEANNIE BALDERRAMOS	Date 5-4-10
Approval Recommended by		
Signature Deanna Vilcheck	Area Construction Manager DEANNA VILCHECK	Date 5/4/10
Engineer Approval by		
Signature Deanna Vilcheck	Area Construction Manager DEANNA VILCHECK	Date 5/19/10

We the undersigned contractor, have given careful consideration to the change proposed and agree, if this proposal is approved, that we will provide all equipment, furnish the materials, except as may otherwise be noted above, and perform all services necessary for the work above specified, and will accept as full payment therefor the prices shown above.

NOTE: If you, the contractor, do not sign acceptance of this order, your attention is directed to the requirements of the specifications as to proceeding with the ordered work and filing a written protest within the time therein specified.

Contractor Acceptance by		
Signature	(Print name and title) STEVE FRANKS, CHIEF ESTIMATOR	Date 5.18.10

STATE OF CALIFORNIA - DEPARTMENT OF TRANSPORTATION

CONTRACT CHANGE ORDER MEMORANDUM

DATE: 4/20/2010 Page 1 of 2

TO: MIKE FORNER / DEANNA VILCHECK	FILE: E.A. 04 - 0120R4
	CO-RTE-PM SF-80-12.6/13.2
FROM: JEANNIE BALDERRAMOS	FED. NO.
CCO#: 124 SUPPLEMENT#: 1 Category Code: CBPC	CONTINGENCY BALANCE (incl. this change) $35,640,164.59
COST: $1,100.00 INCREASE ☑ DECREASE ☐	HEADQUARTERS APPROVAL REQUIRED? ☑ YES ☐ NO
SUPPLEMENTAL FUNDS PROVIDED: $0.00	IS THIS REQUEST IN ACCORDANCE WITH ENVIRONMENTAL DOCUMENTS? ☑ YES ☐ NO
CCO DESCRIPTION: Bent W7 Seismic Monitoring Modification	PROJECT DESCRIPTION: CONSTRUCT ROUTE 80 TEMP BYPASS STRUCTURE

Original Contract Time:	Time Adj. This Change:	Previously Approved CCO Time Adjustments:	Percentage Time Adjusted: (including this change)	Total # of Unreconciled Deferred Time CCO(s): (including this change)
475 Day(s)	0 Day(s)	1660 Day(s)	349 %	0

THIS CHANGE ORDER PROVIDES FOR:

Modifications to the seismic monitoring conduit from Bent W7 of the Yerba Buena Island Transition Structure.

This contract provides for the construction of a temporary detour structure that will allow for the tie-in of the new east span of the San Francisco Oakland Bay Bridge to the existing Yerba Buena Island tunnel. The contract also provides for the advanced construction of 5 bents of the Yerba Buena Island Transition Structure (YBITS) comprised of 13 foundations and columns. The remaining portions of the YBITS will be constructed within the contract that will take place after the completion of this contract.

As part of the advanced YBITS construction work, the contract provides for furnishing and installing galvanized steel conduit for the Bent W7 columns that will provide for future seismic monitoring. This conduit was provided for under the original Change order No. 124. Project Development has now issued modifications to increase the size of this conduit from 27 mm to 41 mm in one of the columns. This change order provides for this modification.

The modification will apply to approximately 40 meters of conduit.

Compensation shall be paid for additional costs associated with furnishing and installing approximately 40 meters of the larger galvanized steel conduit.

Compensation for these costs shall be paid as an adjustment of compensation at an agreed lump sum of $1,100.00 which shall be financed from the contract's contingency funds. A cost analysis is on file.

No adjustment of contract time is warranted as the change will not affect the controlling operation.

This change was concurred with by Ken Terpstra - Project Manager, Jaime Gutierrez - Project Engineer, and Lina Ellis - Maintenance.

ADA Notice: For individuals with sensory disabilities, this document is available in alternate formats. For information call (916) 654-6410 or TDD (916) 654-3880 or write

CONCURRED BY:		
Construction Engineer:	Jeannie Balderramos, RE	Date 5-19-10
Bridge Engineer:	Bill Casey, Bridge Engineer	Date 5/19/10
Project Engineer:	Jaime Gutierrez, PE	Date 5/19/10
Project Manager:	Ken Terpstra, PM	Date 5/19/10
FHWA Rep.:		Date
Environmental:		Date
Other (specify):	Lina Ellis, Maintenance	Date 5/19/10
Other (specify):	MOHAN AYADURAI	Date 4/4/10
District Prior Approval By		Date
HQ (Issue Approve) By:	Larry Salhaney, HQ CCO Engine	Date 5/16/10
Resident Engineer's Signature:	Jeannie Balderramos	Date 5-19-10

ESTIMATE OF COST		
	THIS REQUEST	TOTAL TO DATE
ITEMS	$0.00	$0.00
FORCE ACCOUNT	$0.00	$40,000.00
AGREED PRICE	$0.00	$313,975.00
ADJUSTMENT	$1,100.00	$1,100.00
TOTAL	$1,100.00	$355,075.00

FEDERAL PARTICIPATION

☐ PARTICIPATING ☐ PARTICIPATING IN PART ☑ NONE
☐ NON-PARTICIPATING (MAINTENANCE) ☐ NON-PARTICIPATING

FEDERAL SEGREGATION (if more than one Funding Source or P.I.P. type)
☐ CCO FUNDED PER CONTRACT ☐ CCO FUNDED AS FOLLOWS

FEDERAL FUNDING SOURCE	PERCENT

ADA Notice: For individuals with sensory disabilities, this document is available in alternate formats. For information call: (916) 654-6410 or TDD (916) 654-3880 or write

STATE OF CALIFORNIA - DEPARTMENT OF TRANSPORTATION

CONTRACT CHANGE ORDER MEMORANDUM

RECEIVED
007653 JUN 20 08

DATE: 2/20/2008

TO: MIKE FORNER / DENNIS TURCHON	FILE: E.A. 04 - 0120R4
	CO-RTE-PM SF-80-12.6/13.2
FROM: BILL CASEY	FED. NO. ACBRIM-080-1(097)N
CCO#: **125** SUPPLEMENT#: **0** Category Code: **AXZZ**	CONTINGENCY BALANCE (incl. this change) **$75,971,005.82**
COST: **$150,000.00** INCREASE ☑ DECREASE ☐	HEADQUARTERS APPROVAL REQUIRED? ☐ YES ☑ NO
SUPPLEMENTAL FUNDS PROVIDED: **$0.00**	IS THIS REQUEST IN ACCORDANCE WITH ENVIRONMENTAL DOCUMENTS? ☑ YES ☐ NO
CCO DESCRIPTION: Place AC on Miscellaneous Areas	**PROJECT DESCRIPTION:** CONSTRUCT ROUTE 80 TEMP BYPASS STRUCTURE

Original Contract Time:	Time Adj. This Change:	Previously Approved CCO Time Adjustments:	Percentage Time Adjusted: (including this change)	Total # of Unreconciled Deferred Time CCO(s): (including this change)
475 Day(s)	**0** Day(s)	**1195** Day(s)	**252** %	**7**

THIS CHANGE ORDER PROVIDES FOR:

Placing asphalt concrete at miscellaneous areas as authorized by the Engineer.

The construction of the Yerba Buena Island Transition Structure (YBITS) was scheduled to be performed after the completion of this project. In order to advance a portion of the YBITS work and potentially allow for an early opening of the new SFOBB, the Department issued two separate strategy memorandums, issued on December 14, 2006 and December 25, 2006, recommending a portion of the YBITS foundation work be performed under this contract by change order. The memorandums were approved by Tony Anziano - Toll Bridge Program Manager, Richard Land - Chief Engineer, and the Toll Bridge Program Oversight Committee (TBPOC). Consequently, these strategy memorandums resulted in multiple projects working simultaneously on Yerba Buena Island which necessitated staging coordination between American Bridge/Flour (ABF) on Contract 04-0120F4 and C.C.Myers, Inc. (CCM) on this contract (04-0120R4).

This change order is necessary to mititgate potential delays and conflicts between ABF and CCM by providing additional staging areas for CCM's use due to the added YBITS and ETI Strategy construction work incorporated on this South - South Detour project. Current work operations already occupy existing staging areas established for the Contractor's use to construct this project. The inclusion of new YBITS and ETI Strategy work impacts the Contractor's ability to mobilize and stage equipment.

The scope of work includes grading and placing asphalt concrete to allow more efficient staging of materials, equipment, and personnel.

The Contractor shall be compensated in a Extra Work at Force Account with an estimated cost of $ 150,000.00, which can be financed on the contract's contingency fund. A cost analysis is in the project files.

There will be no time adjustment as this change does not affect the Contractor's controlling operation.

Maintenance concurrence is not required as it does not affect any permanent physical roadway features.

This change was concurred by Alec Melkonians - Asst. Project Manager and Hong Wong - Project Engineer.

ADA Notice: For individuals with sensory disabilities, this document is available in alternate formats. For information call: (916) 654-6410 or TDD (916) 654-3880 or write Records and Forms Management, 1120 N Street, MS-89, Sacramento, CA 95814.

CONCURRED BY:			
Construction Engineer:	Raoul Maltez, Senior TE	Date	3/14/08
Bridge Engineer:		Date	
Project Engineer:	Hong Wong, PE	Date	3/4/08
Project Manager:	Alec Melkonians	Date	3/3/08
FHWA Rep.:		Date	
Environmental:		Date	
Other (specify):		Date	
Other (specify):		Date	
District Prior Approval By:		Date	
HQ (Issue Approve) By:		Date	
Resident Engineer's Signature:		Date	
		3-17-08	

ESTIMATE OF COST

	THIS REQUEST	TOTAL TO DATE
ITEMS	$0.00	$0.00
FORCE ACCOUNT	$150,000.00	$150,000.00
AGREED PRICE	$0.00	$0.00
ADJUSTMENT	$0.00	$0.00
TOTAL	$150,000.00	$150,000.00

FEDERAL PARTICIPATION

☐ PARTICIPATING ☐ PARTICIPATING IN PART ☐ NONE
☐ NON-PARTICIPATING (MAINTENANCE) ☑ NON-PARTICIPATING

FEDERAL SEGREGATION (if more than one Funding Source or P.I.P. type)
☑ CCO FUNDED PER CONTRACT ☐ CCO FUNDED AS FOLLOWS

FEDERAL FUNDING SOURCE	PERCENT

ADA Notice: For individuals with sensory disabilities, this document is available in alternate formats. For information call: (916) 654-6410 or TDD (916) 654-3880 or write Records and Forms Management, 1120 N Street, MS-89, Sacramento, CA 95814.

STATE OF CALIFORNIA - DEPARTMENT OF TRANSPORTATION

CONTRACT CHANGE ORDER

Change Requested by: Engineer

CCO 125	Suppl. No. 0	Contract No. 04 - 0120R4	Road SF-80-12.6/13.2	FED. AID LOC.: ACBRIM-080-1(097)N

To: CC MYERS INC

You are directed to make the following changes from the plans and specifications or do the following described work not included in the plans and specifications for this contract. ***NOTE: This change order is not effective until approved by the Engineer.***

Description of work to be done, estimate of quantities and prices to be paid. (Segregate between additional work at contract price, agreed price and force account.) Unless otherwise stated, rates for rental of equipment cover only such time as equipment is actually used and no allowance will be made for idle time. This last percentage shown is the net accumulated increase or decrease from the original quantity in the Engineer's Estimate.

Extra Work at Force Account:

As authorized by the Engineer and in accordance with Section 39 'Asphalt Concrete' of the Standard Specifications, place Type A asphalt concrete at various areas.

Estimated Cost of Extra Work at Force Account $150,000.00

Estimated Cost: **Increase** ☑ **Decrease** ☐ **$150,000.00**

By reason of this order the time of completion will be adjusted as follows: 0 days

Submitted by

Signature	Resident Engineer	Date
	BILL CASEY	3-7-08

Approval Recommended by

Signature	Area Construction Manager	Date
	DENNIS TURCHON	3/7/08

Engineer Approval by

Signature	Area Construction Manager	Date
	DENNIS TURCHON	4/4/08

We the undersigned contractor, have given careful consideration to the change proposed and agree, if this proposal is approved, that we will provide all equipment, furnish the materials, except as may otherwise be noted above, and perform all services necessary for the work above specified, and will accept as full payment therefor the prices shown above.

NOTE: If you, the contractor, do not sign acceptance of this order, your attention is directed to the requirements of the specifications as to proceeding with the ordered work and filing a written protest within the time therein specified.

Contractor Acceptance by

Signature	(Print name and title)	Date
	DANIEL E. Hamick, PRESIDENT	3/25/08

CONTRACT CHANGE ORDER

Change Requested by: Engineer

CCO 125	Suppl. No. 1	Contract No. 04 - 0120R4	Road SF-80-12.6/13.2	FED. AID LOC.: ACBRIM-080-1(097)N

To: CC MYERS INC

You are directed to make the following changes from the plans and specifications or do the following described work not included in the plans and specifications for this contract. ***NOTE: This change order is not effective until approved by the Engineer.***

Description of work to be done, estimate of quantities and prices to be paid. (Segregate between additional work at contract price, agreed price and force account.) Unless otherwise stated, rates for rental of equipment cover only such time as equipment is actually used and no allowance will be made for idle time. This last percentage shown is the net accumulated increase or decrease from the original quantity in the Engineer's Estimate.

Extra Work at Force Account:

Provide additional funds.

Estimated cost of Extra Work at Force Account $35,000.00

Estimated Cost: **Increase** ☑ **Decrease** ☐ **$35,000.00**

By reason of this order the time of completion will be adjusted as follows: 0 days

Submitted by

Signature	Resident Engineer	Date
	BILL CASEY	6-11-08

Approval Recommended by

Signature	Area Construction Manager	Date
	DENNIS TURCHON	6/11/08

Engineer Approval by

Signature	Area Construction Manager	Date
	DENNIS TURCHON	6/11/08

We the undersigned contractor, have given careful consideration to the change proposed and agree, if this proposal is approved, that we will provide all equipment, furnish the materials, except as may otherwise be noted above, and perform all services necessary for the work above specified, and will accept as full payment therefor the prices shown above.

NOTE: If you, the contractor, do not sign acceptance of this order, your attention is directed to the requirements of the specifications as to proceeding with the ordered work and filing a written protest within the time therein specified.

Contractor Acceptance by

Signature	(Print name and title)	Date
N/A	N/A	N/A

STATE OF CALIFORNIA - DEPARTMENT OF TRANSPORTATION

CONTRACT CHANGE ORDER

Change Requested by: Engineer

CCO 125	Suppl. No. 2	Contract No. 04 - 0120R4	Road SF-80-12.6/13.2	FED. AID LOC.: ACBRIM-080-1(097)N

To: **CC MYERS INC**

You are directed to make the following changes from the plans and specifications or do the following described work not included in the plans and specifications for this contract. ***NOTE: This change order is not effective until approved by the Engineer.***

Description of work to be done, estimate of quantities and prices to be paid. (Segregate between additional work at contract price, agreed price and force account.) Unless otherwise stated, rates for rental of equipment cover only such time as equipment is actually used and no allowance will be made for idle time. This last percentage shown is the net accumulated increase or decrease from the original quantity in the Engineer's Estimate.

Extra Work at Force Account:

Provide additional funds.

Estimated Cost of Extra Work at Force Account $100,000.00

RECEIVED
010214 MAY -7 09

Estimated Cost: Increase ☑ Decrease ☐ **$100,000.00**

By reason of this order the time of completion will be adjusted as follows: 0 days

Submitted by

Signature	Resident Engineer	Date
[signature]	BILL CASEY	4-13-09

Approval Recommended by

Signature	Area Construction Manager	Date
Deanna Vilcheck	DEANNA VILCHECK	4/15/09

Engineer Approval by

Signature	Area Construction Manager	Date
Deanna Vilcheck	DEANNA VILCHECK	4/15/09

We the undersigned contractor, have given careful consideration to the change proposed and agree, if this proposal is approved, that we will provide all equipment, furnish the materials, except as may otherwise be noted above, and perform all services necessary for the work above specified, and will accept as full payment therefor the prices shown above.

NOTE: If you, the contractor, do not sign acceptance of this order, your attention is directed to the requirements of the specifications as to proceeding with the ordered work and filing a written protest within the time therein specified.

Contractor Acceptance by

Signature	(Print name and title)	Date
NOT APPLICABLE	N/A	N/A

STATE OF CALIFORNIA - DEPARTMENT OF TRANSPORTATION

CONTRACT CHANGE ORDER MEMORANDUM

TO: MIKE FORNER / DEANNA VILCHECK	FILE: E.A. 04 - 0120R4
	CO-RTE-PM SF-80-12.6/13.2
FROM: BILL CASEY	FED. NO. ACBRIM-080-1(097)N
CCO#: **125** SUPPLEMENT#: **2** Category Code AXZZ	CONTINGENCY BALANCE (incl. this change) **$59,239,602.55**
COST: **$100,000.00** INCREASE ☑ DECREASE ☐	HEADQUARTERS APPROVAL REQUIRED? ☑ YES ☐ NO
SUPPLEMENTAL FUNDS PROVIDED: **$0.00**	IS THIS REQUEST IN ACCORDANCE WITH ENVIRONMENTAL DOCUMENTS? ☑ YES ☐ NO
CCO DESCRIPTION: Add Funds Place AC at Misc. Areas	**PROJECT DESCRIPTION:** CONSTRUCT ROUTE 80 TEMP BYPASS STRUCTURE

Original Contract Time:	Time Adj. This Change:	Previously Approved CCO Time Adjustments:	Percentage Time Adjusted: (including this change)	Total # of Unreconciled Deferred Time CCO(s): (including this change)
475 Day(s)	**0** Day(s)	**1195** Day(s)	**252** %	**7**

THIS CHANGE ORDER PROVIDES FOR:

Additional funds for placing asphalt concrete at miscellaneous areas as authorized by the Engineer.

The construction of the Yerba Buena Island Transition Structure (YBITS) was scheduled to be performed after the completion of this project. In order to advance a portion of the YBITS work and potentially allow for an early opening of the new SFOBB, the Department issued a strategy memorandum, dated December 25, 2006, recommending a portion of the YBITS foundation work be performed under this contract by change order. The memorandum was approved by Tony Anziano - Toll Bridge Program Manager, Richard Land - Chief Engineer, and the Toll Bridge Program Oversight Committee (TBPOC). Consequently, this strategy memorandum resulted in multiple projects working simultaneously on Yerba Buena Island which necessitated staging coordination between American Bridge/Flour (ABF) on Contract 04-0120F4 and C.C.Myers, Inc. (CCM) on this contract (04-0120R4).

This change order is necessary to cover cost overruns to mititgate potential delays and conflicts between ABF and CCM by providing additional staging areas for CCM's use due to the added YBITS construction work incorporated on this South - South Detour project. Current work operations already occupy existing staging areas established for the Contractor's use to construct this project. The inclusion of new YBITS work impacts the Contractor's ability to mobilize and stage equipment.

The scope of work includes grading and placing asphalt concrete to allow more efficient staging of materials, equipment, and personnel.

This work will be done as Extra Work at Force Account with an estimated cost of $ 100,000.00, which can be financed on the contract's contingency fund, bringing the total cost to be $285,000.00. A cost analysis is in the project files.

The Contractor's signature is not required for additional funds for Extra Work at Force Account change orders. Therefore this change order is being issued unilaterally.

There will be no time adjustment as this change does not affect the Contractor's controlling operation.

Maintenance concurrence is not required as it does not affect any permanent physical roadway features.

This change was concurred by Alec Melkonians - Asst. Project Manager and Hong Wong - Project Engineer.

ADA Notice: For individuals with sensory disabilities, this document is available in alternate formats. For information call: (916) 654-6410 or TDD (916) 654-3880 or write Records and Forms Management, 1120 N Street, MS-89, Sacramento, CA 95814.

CONCURRED BY:			
Construction Engineer:		Date	
Bridge Engineer:		Date	
Project Engineer:	Hong Wong, PE	Date	4/3/09
Project Manager:	Alec Melkonians	Date	4/3/09
FHWA Rep.:		Date	
Environmental:		Date	
Other (specify):		Date	
Other (specify):		Date	
District Prior Approval By:		Date	
HQ (Issue Approve) By:	Bob Molera, HQ CCO Engineer	Date	4-15-09
Resident Engineer's Signature:		Date	
			4-13-09

ESTIMATE OF COST

	THIS REQUEST	TOTAL TO DATE
ITEMS	$0.00	$0.00
FORCE ACCOUNT	$100,000.00	$285,000.00
AGREED PRICE	$0.00	$0.00
ADJUSTMENT	$0.00	$0.00
TOTAL	$100,000.00	$285,000.00

FEDERAL PARTICIPATION

☐ PARTICIPATING ☐ PARTICIPATING IN PART ☑ NONE
☐ NON-PARTICIPATING (MAINTENANCE) ☐ NON-PARTICIPATING

FEDERAL SEGREGATION (if more than one Funding Source or P.I.P. type)
☐ CCO FUNDED PER CONTRACT ☐ CCO FUNDED AS FOLLOWS

FEDERAL FUNDING SOURCE	PERCENT

ADA Notice: For individuals with sensory disabilities, this document is available in alternate formats. For information call: (916) 654-6410 or TDD (916) 654-3880 or write Records and Forms Management, 1120 N Street, MS-89, Sacramento, CA 95814.

STATE OF CALIFORNIA - DEPARTMENT OF TRANSPORTATION

CONTRACT CHANGE ORDER

Change Requested by: Engineer

CCO 125	Suppl. No. 3	Contract No. 04 - 0120R4	Road SF-80-12.6/13.2	FED. AID LOC.: ACBRIM-080-1(097)N

To: **CC MYERS INC**

You are directed to make the following changes from the plans and specifications or do the following described work not included in the plans and specifications for this contract. ***NOTE: This change order is not effective until approved by the Engineer.***

Description of work to be done, estimate of quantities and prices to be paid. (Segregate between additional work at contract price, agreed price and force account.) Unless otherwise stated, rates for rental of equipment cover only such time as equipment is actually used and no allowance will be made for idle time. This last percentage shown is the net accumulated increase or decrease from the original quantity in the Engineer's Estimate.

Extra Work at Force Account:

Provide additional funds.

Estimated cost of Extra Work at Force Account $50,000.00

Estimated Cost: **Increase** ☑ **Decrease** ☐ **$50,000.00**

By reason of this order the time of completion will be adjusted as follows: 0 days

Submitted by:		
Signature	**Resident Engineer** BILL CASEY	**Date** 9-15-09
Approval Recommended by:		
Signature Deanna Vilcheck	**Area Construction Manager** DEANNA VILCHECK	**Date** 9/15/09
Engineer Approval by:		
Signature Deanna Vilcheck	**Area Construction Manager** DEANNA VILCHECK	**Date** 9/17/09

We the undersigned contractor, have given careful consideration to the change proposed and agree, if this proposal is approved, that we will provide all equipment, furnish the materials, except as may otherwise be noted above, and perform all services necessary for the work above specified, and will accept as full payment therefor the prices shown above.

NOTE: If you, the contractor, do not sign acceptance of this order, your attention is directed to the requirements of the specifications as to proceeding with the ordered work and filing a written protest within the time therein specified.

Contractor Acceptance by:		
Signature N/A	**(Print name and title)** N/A	**Date** N/A

STATE OF CALIFORNIA - DEPARTMENT OF TRANSPORTATION

CONTRACT CHANGE ORDER MEMORANDUM

DATE: 9/9/2009

TO: MIKE FORNER / DEANNA VILCHECK	FILE: E.A. 04 - 0120R4
	CO-RTE-PM SF-80-12.6/13.2
FROM: BILL CASEY	FED. NO. ACBRIM-080-1(097)N
CCO#: 125 SUPPLEMENT#: 3 Category Code: AXZZ	CONTINGENCY BALANCE (incl. this change) $55,600,420.59
COST: $50,000.00 INCREASE ☑ DECREASE ☐	HEADQUARTERS APPROVAL REQUIRED? ☑ YES ☐ NO
SUPPLEMENTAL FUNDS PROVIDED: $0.00	IS THIS REQUEST IN ACCORDANCE WITH ENVIRONMENTAL DOCUMENTS? ☑ YES ☐ NO
CCO DESCRIPTION: Place AC Funds Request	**PROJECT DESCRIPTION:** CONSTRUCT ROUTE 80 TEMP BYPASS STRUCTURE

Original Contract Time:	Time Adj. This Change:	Previously Approved CCO Time Adjustments:	Percentage Time Adjusted: (including this change)	Total # of Unreconciled Deferred Time CCO(s): (including this change)
475 Day(s)	0 Day(s)	0 Day(s)	0 %	0

THIS CHANGE ORDER PROVIDES FOR:

Additional funds.

This project, the Temporary Bypass Structure (TBS), was awarded in March 2004 to construct a detour that will allow for the tie in of the new east span of the San Francisco Oakland Bay Bridge to Yerba Buena Island. The TBS encompasses three main structures, the East Tie-In (ETI) to the existing bridge, the West Tie-In (WTI) to Yerba Buena Island and the Viaduct structure between the two tie ins.

The original contract change order calls for in placing asphalt concrete at miscellaneous areas as authorized by the Engineer. This change order is necessary to pay all outstanding extra work bills in the holding file since all the funds on this change have been depleted.

This change order work is now complete and it is anticipated to pay the Contractor in a Extra Work at Force Account with an estimated cost of $ 50,000.00, which can be financed by the contract's contingency fund, bringing the total cost to be $335,000.00.

The Contractor's signature is not required for additional funds request for Extra Work at Force Account change orders, therefore this change order is being issued unilaterally.

Alec Melkonians, Asst. Project Manager, and Hong Wong, Project Engineer, both concurred on this change.

No adjustment of contract time is warranted, as this change does not affect the controlling operation.

CT Maintenance concurrence is not required since it does not affect any permanent roadway features.

CONCURRED BY:			
Construction Engineer:	BILL CASEY R.E.	Date	9-15-09
Bridge Engineer:		Date	
Project Engineer:	Hong Wong, PE	Date	9/10/09
Project Manager:	Alec Melkonians	Date	9/9/09
FHWA Rep.:		Date	
Environmental:		Date	
Other (specify):		Date	
Other (specify):		Date	
District Prior Approval By:		Date	
HQ (Issue Approve) By:	~~Bob Molera~~ LARRY SALHANEY	Date	9/17/09
Resident Engineer's Signature:		Date	9-15-09

ESTIMATE OF COST

	THIS REQUEST	TOTAL TO DATE
ITEMS	$0.00	$0.00
FORCE ACCOUNT	$50,000.00	$335,000.00
AGREED PRICE	$0.00	$0.00
ADJUSTMENT	$0.00	$0.00
TOTAL	$50,000.00	$335,000.00

FEDERAL PARTICIPATION

☐ PARTICIPATING ☐ PARTICIPATING IN PART ☑ NONE
☐ NON-PARTICIPATING (MAINTENANCE) ☐ NON-PARTICIPATING

FEDERAL SEGREGATION (if more than one Funding Source or P.I.P. type)
☐ CCO FUNDED PER CONTRACT ☐ CCO FUNDED AS FOLLOWS

FEDERAL FUNDING SOURCE	PERCENT

ADA Notice: For individuals with sensory disabilities, this document is available in alternate formats. For information call: (916) 654-6410 or TDD (916) 654-3880 or write Records and Forms Management, 1120 N Street, MS-89, Sacramento, CA 95814.

CONTRACT CHANGE ORDER

Change Requested by: Engineer

CCO 126	Suppl. No. 0	Contract No. 04 - 0120R4	Road SF-80-12.6/13.2	FED. AID LOC.: ACBRIM-080-1(097)N

To: **CC MYERS INC**

You are directed to make the following changes from the plans and specifications or do the following described work not included in the plans and specifications for this contract. ***NOTE: This change order is not effective until approved by the Engineer.***

Description of work to be done, estimate of quantities and prices to be paid. (Segregate between additional work at contract price, agreed price and force account.) Unless otherwise stated, rates for rental of equipment cover only such time as equipment is actually used and no allowance will be made for idle time. This last percentage shown is the net accumulated increase or decrease from the original quantity in the Engineer's Estimate.

Extra Work at Force Account:

In accordance with Section 5-1.27 "Hazardous Material, General" and Section 10-1.42 "Earthwork" of the contract Special Provisions, provide for the off-haul and disposal of hazardous or Class II material concerning the structure excavation for the advanced construction of the Yerba Buena Island Transition Structure (YBITS) (Br. No. 34-0006 L/R) and the Yerba Buena Island Eastbound On Ramp Structure (Br. No. 34-0006 R) as authorized by the Engineer.

Compensation provided under this change order shall include the off-haul and disposal of all hazardous or Class II material encountered concerning the structure excavation for Bents W7L and W7R of the YBITS (Br. No. 34-0006 L/R).

Off-haul and disposal of hazardous or Class II material identified on the plan sheets of Change Orders No. 64 Supplement No. 1, No. 73 and No. 77 at Bent W3L, W3R, W4L, W4R, W5L, W5R, W6L, W6R of YBITS (Br. No. 34-0006 L/R) and Ben W7 of the Yerba Buena Island Eastbound On Ramp Structure (Br. No. 34-0006 R) shall be compensated under the lump sum payments provided under those change orders. Off-haul and disposal of unanticipated hazardous or Class II material encountered at these locations shall be compensated under this change order.

Estimated Cost of Extra Work at Force Account $500,000.00

Estimated Cost: Increase ☑ Decrease ☐ **$500,000.00**

By reason of this order the time of completion will be adjusted as follows: Deferred

Submitted by

Signature	Resident Engineer BILL CASEY	Date 4-2-08

Approval Recommended by

Signature	Area Construction Manager DENNIS TURCHON	Date 4/4/08

Engineer Approval by

Signature	Area Construction Manager DENNIS TURCHON	Date 4/17/08

We the undersigned contractor, have given careful consideration to the change proposed and agree, if this proposal is approved, that we will provide all equipment, furnish the materials, except as may otherwise be noted above, and perform all services necessary for the work above specified, and will accept as full payment therefor the prices shown above.

NOTE: If you, the contractor, do not sign acceptance of this order, your attention is directed to the requirements of the specifications as to proceeding with the ordered work and filing a written protest within the time therein specified.

Contractor Acceptance by

Signature	(Print name and title) DANIEL E. MYRICK, PRESIDENT	Date 4/14/08

STATE OF CALIFORNIA - DEPARTMENT OF TRANSPORTATION

CONTRACT CHANGE ORDER MEMORANDUM

DATE: 3/21/2008 Page 1 of 2

TO: MIKE FORNER / DENNIS TURCHON	FILE: E.A. 04 - 0120R4
	CO-RTE-PM SF-80-12.6/13.2
FROM: BILL CASEY	FED. NO. ACBRIM-080-1(097)N

007649 JUN 20 8

CCO#: **126**	SUPPLEMENT#: **0**	Category Code: **BZZZ**	CONTINGENCY BALANCE (incl. this change) **$46,517,937.12**
COST: **$500,000.00**	INCREASE ☑ DECREASE ☐		HEADQUARTERS APPROVAL REQUIRED? ☑ YES ☐ NO
SUPPLEMENTAL FUNDS PROVIDED: **$380,000.00**			IS THIS REQUEST IN ACCORDANCE WITH ENVIRONMENTAL DOCUMENTS? ☑ YES ☐ NO

CCO DESCRIPTION:
WTI Hazardous Soil Removal

PROJECT DESCRIPTION:
CONSTRUCT ROUTE 80 TEMP BYPASS STRUCTURE

Original Contract Time:	Time Adj. This Change:	Previously Approved CCO Time Adjustments:	Percentage Time Adjusted: (including this change)	Total # of Unreconciled Deferred Time CCO(s): (including this change)
475 Day(s)	**DEF** Day(s)	**1195** Day(s)	**252** %	**8**

THIS CHANGE ORDER PROVIDES FOR:

compensation to the contractor for the off-haul and disposal of hazardous and Class II material.

This project, the Temporary Bypass Structure (TBS), was awarded in March 2004 to construct a detour that will allow for the tie in of the new east span of the San Francisco Oakland Bay Bridge to Yerba Buena Island. The TBS encompasses three main structures, the East Tie-In to the existing bridge, the West Tie-In (WTI) to Yerba Buena Island, and the Viaduct structure between the two tie ins.

The Department issued a December 25, 2006 strategy memo which was approved by Tony Anziano (Toll Bridge Program Manager), Richard Land (Chief Engineer), and subsequently by the Toll Bridge Program Oversight Committee (TBPOC) that called for the advance construction of foundation work for the Yerba Buena Island Transition Structure (YBITS) under this contract. This strategy has been implemented under this contract by the execution of several change orders (CCO No. 64-1, 73, 75 & 77) that have added the advance construction of 13 foundations.

This change order compensates the contractor for additional off-haul and disposal costs associated with hazardous and Class II materials encountered during the excavation of these footings. The off-haul and disposal of all hazardous and Class II material encountered at the 3 foundations of Bent W7L and W7R shall be paid under this change order as specified under Change Order No. 75. Concerning the other 10 foundations from the advanced YBITS work, compensation shall only be provided under this change order for unanticipated hazardous or Class II material encountered. The change orders that provided for the construction of those foundations (Change Order No. 64-1, 73 & 77) included off-haul and disposal costs for identified hazardous and Class II material in the agreed lump sum compensation provided for the work.

During the excavation of Bent W4, asbestos shingles were encountered that were not identified on the plan sheets. The cost of off-haul and disposal of this material shall be paid under this change order. It is also anticipated that Bent W7 will encounter material that requires off-haul and disposal under this change order.

Compensation shall be paid as extra work at force account for an estimated cost of $500,000.00. This cost shall be financed with $380,000.00 of supplemental work funds and $120,000.00 from the contract's contingency funds. Supplemental Work funding of $500,000.00 was provided to the contract for the disposal of hazardous material of which $100,000.00 was expended under Change Order No. 47 and $20,000.00 was expended under Change Order No. 31. The remaining $380,000.00 shall be allocated to this change order. A cost estimate is on file in the project records.

Adjustment of contract time is deferred as the work may affect the controlling operation.

This change was concurred by Alec Melkonians - Asst. Project Manager and Hong Wong - Project Engineer.

Maintenance concurrence is not required as the work doesn't affect any permanent roadway features.

ADA Notice: For individuals with sensory disabilities, this document is available in alternate formats. For information call: (916) 654-6410 or TDD (916) 654-3880 or write Records and Forms Management, 1120 N Street, MS-89, Sacramento, CA 95814.

CONCURRED BY:			
Construction Engineer:		Date	
Bridge Engineer:		Date	
Project Engineer:	Hong Wong, PE	Date	3/26/08
Project Manager:	Alec Melkonians	Date	3/26/08
FHWA Rep.:		Date	
Environmental:	Amy Fowler	Date	4/2/08
Other (specify):		Date	
Other (specify):		Date	
District Prior Approval By:	Ken Darby, HQ CCO Engineer	Date	4/7/08
HQ (Issue Approve) By:		Date	
Resident Engineer's Signature:		Date	4-2-08

ESTIMATE OF COST

	THIS REQUEST	TOTAL TO DATE
ITEMS	$0.00	$0.00
FORCE ACCOUNT	$500,000.00	$500,000.00
AGREED PRICE	$0.00	$0.00
ADJUSTMENT	$0.00	$0.00
TOTAL	$500,000.00	$500,000.00

FEDERAL PARTICIPATION

☐ PARTICIPATING ☐ PARTICIPATING IN PART ☐ NONE
☐ NON-PARTICIPATING (MAINTENANCE) ☑ NON-PARTICIPATING

FEDERAL SEGREGATION (if more than one Funding Source or P.I.P. type)
☑ CCO FUNDED PER CONTRACT ☐ CCO FUNDED AS FOLLOWS

FEDERAL FUNDING SOURCE	PERCENT

ADA Notice: For individuals with sensory disabilities, this document is available in alternate formats. For information call: (916) 654-6410 or TDD (916) 654-3880 or write Records and Forms Management, 1120 N Street, MS-89, Sacramento, CA 95814.

CONTRACT CHANGE ORDER

Change Requested by: Engineer

CCO 127	Suppl. No. 0	Contract No. 04 - 0120R4	Road SF-80-12.6/13.2	FED. AID LOC.: ACBRIM-080-1(097)N

To: CC MYERS INC

You are directed to make the following changes from the plans and specifications or do the following described work not included in the plans and specifications for this contract. ***NOTE: This change order is not effective until approved by the Engineer.***

Description of work to be done, estimate of quantities and prices to be paid. (Segregate between additional work at contract price, agreed price and force account.) Unless otherwise stated, rates for rental of equipment cover only such time as equipment is actually used and no allowance will be made for idle time. This last percentage shown is the net accumulated increase or decrease from the original quantity in the Engineer's Estimate.

Extra Work at Force Account:

Construct RTU-8 Utility Platform at existing Pier E1 of the San Francisco - Oakland Bay Bridge as shown on the plans and specifications of Sheets 2 through 20 of this change order and as authorized by the Engineer.

The fabrication of the utility platform shall be paid for by invoice pursuant to Setion 9-1.03, Force Account Payment, of the Standard Specifications. Any payment clauses contained within the specifications of this change order are superseded by Extra Work at Force Account payment method specified herein.

Estimated Cost of Extra Work at Force Account $75,000.00

Estimated Cost: Increase ☑ Decrease ☐ **$75,000.00**

By reason of this order the time of completion will be adjusted as follows: 0 days

Submitted by

Signature	Resident Engineer	Date
	BILL CASEY	8-8-08

Approval Recommended by

Signature	Area Construction Manager	Date
Deanna Vilcheck	DEANNA VILCHECK	8/11/08

Engineer Approval by

Signature	Area Construction Manager	Date
Deanna Vilcheck	DEANNA VILCHECK	9/3/08

We the undersigned contractor, have given careful consideration to the change proposed and agree, if this proposal is approved, that we will provide all equipment, furnish the materials, except as may otherwise be noted above, and perform all services necessary for the work above specified, and will accept as full payment therefor the prices shown above.

NOTE: If you, the contractor, do not sign acceptance of this order, your attention is directed to the requirements of the specifications as to proceeding with the ordered work and filing a written protest within the time therein specified.

Contractor Acceptance by

Signature	(Print name and title)	Date
Dewey C. Lee Jr.	DEWEY C. LEE JR. Contract Manager	8/26/08

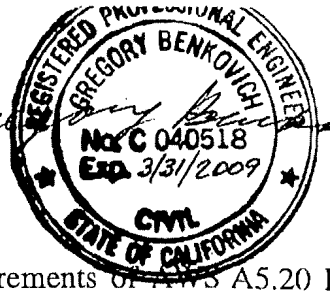

8-3.__ WELDING

GENERAL

Flux cored welding electrodes conforming to the requirements of AWS A5.20 E6XT-4 or E7XT-4 shall not be used to perform welding for this project.

Wherever reference is made to the following AWS welding codes in the Standard Specifications, on the plans, or in these special provisions, the year of adoption for these codes shall be as listed:

AWS Code	Year of Adoption
D1.1	2006
D1.4	2005
D1.5	2002
D1.6	1999

Requirements of the AWS welding codes shall apply unless otherwise specified in the Standard Specifications, on the plans, or in these special provisions. Wherever the abbreviation AWS is used, it shall be equivalent to the abbreviations ANSI/AWS or AASHTO/AWS.

Section 6.1.1.1 of AWS D1.5 is replaced with the following:

Quality Control (QC) shall be the responsibility of the Contractor. As a minimum, the Contractor shall perform inspection and testing of each weld joint prior to welding, during welding, and after welding as specified in this section and as necessary to ensure that materials and workmanship conform to the requirements of the contract documents.

Unless otherwise specified, Sections 6.1.3 through 6.1.4.3 of AWS D1.1, Section 7.1.2 of AWS D1.4, and Sections 6.1.1.2 through 6.1.3.3 of AWS D1.5 are replaced with the following:

The QC Inspector shall be the duly designated person who acts for and on behalf of the Contractor for inspection, testing, and quality related matters for all welding.

Quality Assurance (QA) is the prerogative of the Engineer. The QA Inspector is the duly designated person who acts for and on behalf of the Engineer.

The QC Inspector shall be responsible for quality control acceptance or rejection of materials and workmanship, and shall be currently certified as an AWS Certified Welding Inspector (CWI) in conformance with the requirements in AWS QC1, "Standard for AWS Certification of Welding Inspectors."

The QC Inspector may be assisted by an Assistant QC Inspector provided that this individual is currently certified as an AWS Certified Associate Welding Inspector (CAWI) in conformance with the requirements in AWS QC1, "Standard for AWS Certification of Welding Inspectors." The Assistant QC Inspector may perform inspection under the direct supervision of the QC Inspector provided the assistant is always within visible and audible range of the QC Inspector. The QC Inspector shall be responsible for signing all reports and for determining if welded materials conform to workmanship and acceptance criteria. The ratio of QC Assistants to QC Inspectors shall not exceed 5 to 1.

When the term "Inspector" is used without further qualification, it shall refer to the QC Inspector.

When any work is welded in conformance with the provisions in Section 75, "Miscellaneous Metal," of the Standard Specifications, not including Section 75-1.035, "Bridge Joint Restrainer

CONTRACT CHANGE ORDER NO 127
SHEET 2 OF 20

Units," of the Standard Specifications, Section 6.1.4 of AWS D1.1 is replaced with the following:

The QC Inspector shall be responsible for quality control acceptance or rejection of materials and workmanship and shall be currently certified as an AWS CWI in conformance with the requirements in AWS QC1, "Standard for AWS Certification of Welding Inspectors," or as a Welding Inspector Specialist (WIS) in conformance with the requirements in AWS B5.2, "Specification for the Qualification of Welding Inspector Specialists and Welding Inspector Assistants."

Section 6.14.6, "Personnel Qualification," of AWS D1.1, Section 7.8, "Personnel Qualification," of AWS D1.4, and Section 6.1.3.4, "Personnel Qualification," of AWS D1.5 are replaced with the following:

Personnel performing nondestructive testing (NDT) shall be qualified and certified in conformance with the requirements of the American Society for Nondestructive Testing (ASNT) Recommended Practice No. SNT-TC-1A and the Written Practice of the NDT firm. The Written Practice of the NDT firm shall meet or exceed the guidelines of the ASNT Recommended Practice No. SNT-TC-1A. Individuals who perform NDT, review the results, and prepare the written reports shall be either:

A. Certified NDT Level II technicians, or;
B. Level III technicians who hold a current ASNT Level III certificate in the applicable discipline and are authorized and certified to perform the work of Level II technicians.

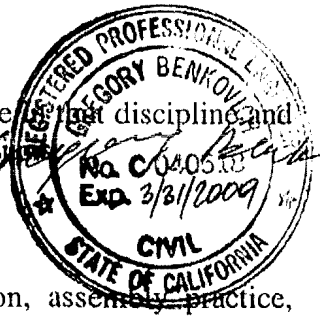

Section 6.5.4 of AWS D1.5 is replaced with the following:

The QC Inspector shall inspect and approve each joint preparation, assembly practice, welding technique, joint fit-up, and the performance of each welder, welding operator, and tack welder to make certain that the applicable requirements of this code and the approved Welding Procedure Specification (WPS) are met. The QC Inspector shall examine the work to make certain that it meets the requirements of Sections 3 and 6.26. The size and contour of all welds shall be measured using suitable gages. Visual inspection for cracks in welds and base metal, and for other discontinuities shall be aided by strong light, magnifiers, or such other devices as may be helpful. Acceptance criteria different from those specified in this code may be used when approved by the Engineer.

Section 6.6.5, "Nonspecified NDT Other than Visual," of AWS D1.1, Section 7.6.5 of AWS D1.4 and Section 6.6.5 of AWS D1.5 shall not apply.

For any welding, the Engineer may direct the Contractor to perform NDT that is in addition to the visual inspection or NDT specified in the AWS or other specified welding codes, in the Standard Specifications, or in these special provisions. Except as provided for in these special provisions, additional NDT required by the Engineer, and associated repair work, will be paid for as extra work as provided in Section 4-1.03D, "Extra Work," of the Standard Specifications. Prior to release of welded material by the Engineer, if testing by NDT methods other than those originally specified discloses an attempt to defraud or reveals a gross nonconformance, all costs associated with the repair of the deficient area, including NDT of the weld and of the repair, and any delays caused by the repair, shall be at the Contractor's expense. A gross nonconformance is

CONTRACT NO. 04-012024
CONTRACT CHANGE ORDER NO. 127
SHEET 3 OF 20

defined as the sum of planar type rejectable indications in more than 20 percent of the tested length.

When less than 100 percent of NDT is specified for any weld, it is expected that the entire length of weld meet the specified acceptance-rejection criteria. Should any welding deficiencies be discovered by additional NDT directed or performed by the Engineer that utilizes the same NDT method as that originally specified, all costs associated with the repair of the deficient area, including NDT of the weld and of the weld repair, and any delays caused by the repair, shall be at the Contractor's expense.

Repair work to correct welding deficiencies discovered by visual inspection directed or performed by the Engineer, and any associated delays or expenses caused to the Contractor by performing these repairs, shall be at the Contractor's expense.

The Engineer shall have the authority to verify the qualifications or certifications of any welder, QC Inspector, or NDT personnel to specified levels by retests or other means approved by the Engineer.

Inspection and approval of all joint preparations, assembly practices, joint fit-ups, welding techniques, and the performance of each welder, welding operator, and tack welder shall be documented by the QC Inspector on a daily basis for each day welding is performed. For each inspection, including fit-up, Welding Procedure Specification (WPS) verification, and final weld inspection, the QC Inspector shall confirm and document compliance with the requirements of the AWS or other specified code criteria and the requirements of these special provisions on all welded joints before welding, during welding, and after the completion of each weld.

In addition to the requirements specified in the applicable code, the period of effectiveness for a welder's or welding operator's qualification shall be a maximum of 3 years for the same weld process, welding position, and weld type. If welding will be performed without gas shielding, then qualification shall also be without gas shielding. Excluding welding of fracture critical members, a valid qualification at the beginning of work on a contract will be acceptable for the entire period of the contract, as long as the welder's or welding operator's work remains satisfactory.

In addition to the requirements of AWS D1.1, welding procedures qualification for work welded in conformance with that code shall conform to the following requirements:

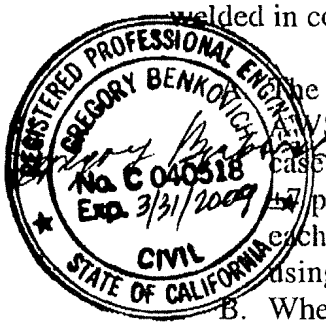

A. The travel speed, amperage, and voltage values that are used for tests conducted per AWS D1.1, Section 4.1.1, shall be consistent for each pass in a weld joint and shall in no case vary by more than ±10 percent for travel speed, ±10 percent for amperage, and ±7 percent for voltage as measured from a predetermined target value or average within each weld pass. The travel speed shall in no case vary by more than ±15 percent when using submerged arc welding.

B. When a nonstandard weld joint is to be made using a combination of WPSs, a single test may be conducted combining the WPSs to be used in production, provided the essential variables, including weld bead placement, of each process are limited to those established in Table 4.5.

In addition to the requirements of AWS D1.5, Section 5.12 or 5.13, welding procedures qualification for work welded in conformance with that code shall conform to the following requirements:

A. Unless considered prequalified, fillet welds shall be qualified in each position. The fillet weld soundness test shall be conducted using the essential variables of the WPS as established by the Procedure Qualification Record (PQR).

CONTRACT NO. 04-0120R4
CONTRACT CHANGE ORDER NO 127
SHEET 4 OF 20

B. For qualification of joints that do not conform to Figures 2.4 and 2.5 of AWS D1.5, a minimum of two WPS qualification tests are required. The tests shall be conducted using both Figure 5.1 and Figure 5.3. The test conforming to Figure 5.1 shall be conducted in conformance with AWS D1.5, Section 5.12 or 5.13. The test conforming to Figure 5.3 shall be conducted using the welding electrical parameters that were established for the test conducted conforming to Figure 5.1. The ranges of welding electrical parameters established during welding per Figure 5.1 in conformance with AWS D1.5, Section 5.12, shall be further restricted according to the limits in Table 5.3 during welding per Figure 5.3.

C. Multiple zones within a weld joint may be qualified. The travel speed, amperage, and voltage values that are used for tests conducted per AWS D1.5 Section 5.13 shall be consistent for each pass in a weld joint, and shall in no case vary by more than ±10 percent for travel speed, ±10 percent for amperage, and ±7 percent for voltage as measured from a predetermined target value or average within each weld pass or zone. The travel speed shall in no case vary by more than ±15 percent when using submerged arc welding.

D. For a WPS qualified in conformance with AWS D1.5 Section 5.13, the values to be used for calculating ranges for current and voltage shall be based on the average of all weld passes made in the test. Heat input shall be calculated using the average of current and voltage of all weld passes made in the test for a WPS qualified in conformance with Section 5.12 or 5.13.

E. Macroetch tests are required for WPS qualification tests, and acceptance shall be per AWS D1.5 Section 5.19.3.

F. When a nonstandard weld joint is to be made using a combination of WPSs, a test conforming to Figure 5.3 may be conducted combining the WPSs to be used in production, provided the essential variables, including weld bead placement, of each process are limited to those established in Table 5.3.

G. Prior to preparing mechanical test specimens, the PQR welds shall be inspected by visual and radiographic tests. Backing bar shall be 75 mm in width and shall remain in place during NDT testing. Results of the visual and radiographic tests shall comply with AWS D1.5 Section 6.26.2, excluding Section 6.26.2.2. Test plates that do not comply with both tests shall not be used.

CONTRACT NO. 04-0120R4
CONTRACT CHANGE ORDER NO 127
SHEET 5 OF 20

10-1.__ EXISTING HIGHWAY FACILITIES

The work performed in connection with various existing highway facilities shall conform to the provisions in Section 15, "Existing Highway Facilities," of the Standard Specifications and these special provisions.

EXISTING PAINT SYSTEMS

The existing paint systems on Bridge Number 34-0006L consist of lead based paint. Any work that disturbs the existing paint system will expose workers to health hazards and will (1) produce debris containing heavy metal in amounts that exceed the thresholds established in Titles 8 and 22 of the California Code of Regulations or (2) release toxic fumes when heated. All debris produced when the existing paint system is disturbed shall be contained.

Gregory Benkovich
REGISTERED PROFESSIONAL ENGINEER
No. C 040518
Exp. 3/31/2009
CIVIL
STATE OF CALIFORNIA

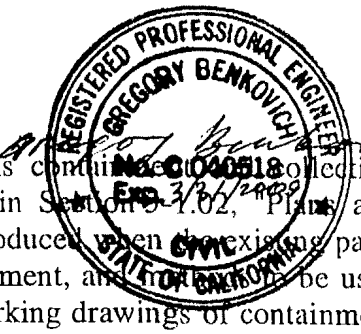

Debris Containment and Collection Program

Prior to starting work, the Contractor shall submit a debris containment and collection program to the Engineer in conformance with the provisions in Section 5-1.02, "Plans and Working Drawings," of the Standard Specifications, for debris produced when the existing paint system is disturbed. The program shall identify materials, equipment, and methods to be used when the existing paint system is disturbed and shall include working drawings of containment systems, loads applied to the bridge by containment structures, and provisions for ventilation and air movement for visibility and worker safety.

If the measures being taken by the Contractor are inadequate to provide for the containment and collection of debris produced when the existing paint system is disturbed, the Engineer will direct the Contractor to revise the operations and the debris containment and collection program. The directions will be in writing and will specify the items of work for which the Contractor's debris containment and collection program is inadequate. No further work shall be performed on the items until the debris containment and collection program is adequate and, if required, a revised program has been approved for the containment and collection of debris produced when the existing paint system is disturbed.

The Engineer will notify the Contractor of the approval or rejection of the submitted or revised debris containment and collection program within 2 weeks of submittal of the Contractor's program or revised program.

The State will not be liable to the Contractor for failure to approve all or any portion of an originally submitted or revised debris containment and collection program, nor for delays to the work due to the Contractor's failure to submit an acceptable program.

Full compensation for the debris containment and collection program shall be considered as included in the contract price paid for the item of work causing the existing paint system to be disturbed, and no additional compensation will be allowed therefor.

Safety and Health Provisions

Attention is directed to Section 7-1.06, "Safety and Health Provisions," of the Standard Specifications. Work practices and worker health and safety shall conform to the California Code of Regulations, Title 8, Construction Safety Orders, including Section 1532.1, "Lead."

The Contractor shall furnish the Engineer a written Code of Safe Practices and shall implement an Injury and Illness Prevention Program and a Hazard Communication Program in conformance with the requirements of Construction Safety Orders, Sections 1509 and 1510.

Prior to starting work that disturbs the existing paint system, and when revisions to the program are required by Section 1532.1, "Lead," the Contractor shall submit the compliance programs required in subsection (e)(2), "Compliance Program," of Section 1532.1, "Lead," of the Construction Safety Orders to the Engineer in conformance with the provisions in Section 5-1.02, "Plans and Working Drawings," of the Standard Specifications. The compliance programs shall include the data specified in subsections (e)(2)(B) and (e)(2)(C) of Section 1532.1, "Lead." Approval of the compliance programs by the Engineer will not be required. The compliance programs shall be reviewed and signed by a Certified Industrial Hygienist (CIH) who is certified in comprehensive practice by the American Board of Industrial Hygiene (ABIH). Copies of all air monitoring or jobsite inspection reports made by or under the direction of the CIH in conformance with Section 1532.1, "Lead," shall be furnished to the Engineer within 10 days after the date of monitoring or inspection.

Full compensation for furnishing the Engineer with the submittals and for implementing the programs required by this safety and health section shall be considered as included in the contract price paid for the item of work causing the existing paint system to be disturbed, and no additional compensation will be allowed therefor.

CONTRACT NO. 04-012084 CONTRACT CHANGE ORDER NO. 127 SHEET 6 OF 20

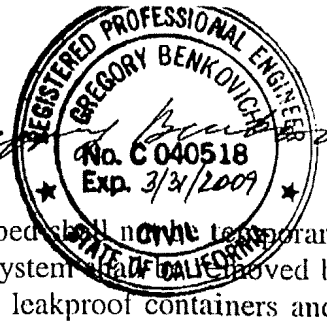

Debris Handling

Debris produced when the existing paint system is disturbed shall not be temporarily stored on the ground. Debris accumulated inside the containment system shall be removed before the end of each work shift. Debris shall be stored in approved, leakproof containers and shall be handled in such a manner that no spillage will occur.

Disposal of debris produced when the existing paint system is disturbed shall be performed in conformance with all applicable Federal, State, and Local hazardous waste laws. Laws that govern this work include:

A. Health and Safety Code, Division 20, Chapter 6.5 (California Hazardous Waste Control Act).
B. Title 22; California Code of Regulations, Division 4.5, (Environmental Health Standards for the Management of Hazardous Waste).
C. Title 8, California Code of Regulations.

Except as otherwise provided herein, debris produced when the existing paint system is disturbed shall be disposed of by the Contractor at an approved Class 1 disposal facility in conformance with the requirements of the disposal facility operator. The debris shall be hauled by a transporter currently registered with the California Department of Toxic Substances Control using correct manifesting procedures and vehicles displaying current certification of compliance. The Contractor shall make all arrangements with the operator of the disposal facility and perform any testing of the debris required by the operator.

At the option of the Contractor, the debris produced when the existing paint system is disturbed may be disposed of by the Contractor at a facility equipped to recycle the debris, subject to the following requirements:

A. Copper slag abrasive blended by the supplier with a calcium silicate compound shall be used for blast cleaning.
B. The debris produced when the existing paint system is disturbed shall be tested by the Contractor to confirm that the solubility of the heavy metals is below regulatory limits and that the debris may be transported to the recycling facility as a non-hazardous waste.
C. The Contractor shall make all arrangements with the operator of the recycling facility and perform any testing of the debris produced when the existing paint system is disturbed that is required by the operator.

Full compensation for debris handling and disposal shall be considered as included in the contract price paid for the item of work causing the existing paint system to be disturbed, and no additional compensation will be allowed therefor.

Work Area Monitoring

The Contractor shall perform work area monitoring of the ambient air and soil in and around the work area at the bridge site to verify the effectiveness of the containment system. The work area monitoring shall consist of collecting, analyzing, and reporting air and soil test results and recommending the required corrective action when specified exposure levels are exceeded. The work area monitoring shall be carried out under the direction of a CIH. The samples shall be collected at locations designated by the Engineer.

Air samples shall be collected and analyzed in conformance with National Institute for Occupational Safety and Health (NIOSH) methods. Air samples for lead detection shall be

CONTRACT NO. 04-0120R4
CONTRACT CHANGE ORDER NO 127
SHEET 7 OF 20

collected and analyzed in conformance with NIOSH Method 7082, with a limit of detection of at least 0.5 $\mu g/m^3$. Air samples for detection of other metals shall be collected and analyzed in conformance with NIOSH Method 7300, with a limit of detection of at least one percent of the appropriate Permissible Exposure Limits (PELs) specified by the California/Occupational Safety and Health Administration (Cal/OSHA). Alternative methods of sample collection and analysis, with equivalent limits of detection, may be used at the option of the Contractor.

The airborne metals exposure, outside either the containment system or work areas, shall not exceed the lower of either: (1) 10 percent of the Action Level specified for lead by Section 1532.1, "Lead," of the Construction Safety Orders, or (2) 10 percent of the appropriate PELs specified for other metals by Cal/OSHA.

The air samples shall be collected at least once per week during progress of work that disturbs the existing paint system. All air samples shall be analyzed within 48 hours at a facility accredited by the Environmental Lead Laboratory Accreditation Program of the American Industrial Hygiene Association (AIHA). When corrective action is recommended by the CIH, additional samples may be required by the Engineer to be taken, at the Contractor's expense.

Four (4) soil samples shall be collected prior to the start of work, and four (4) soil samples shall be collected within 36 hours following completion of cleaning operations of existing steel. Where the cleaning operations extend over large areas of soil or many separate areas of soil at each bridge site, the samples shall be collected at various times during the contract when determined by the Engineer. A soil sample shall consist of 5 plugs, each 19 mm in diameter and 13 mm deep, taken at each corner and center of a one square meter area. Soil samples shall be analyzed for total lead content in conformance with Method 3050 in "Test Methods for Evaluating Solid Waste, Physical/Chemical Methods," SW-846 published by the United States Environmental Protection Agency.

There shall be no increase in the concentrations of heavy metal in the soil in the area affected when the existing paint system is disturbed. When soil sampling, after completion of work that disturbs the existing paint system, shows an increase in the concentrations of heavy metal, the area affected shall be cleaned and resampled at the Contractor's expense until soil sampling and testing shows concentrations of heavy metal less than or equal to the concentrations collected prior to the start of work.

In areas where there is no exposed soil, there shall be no visible increase in the concentrations of heavy metal on the area affected when the existing paint system is disturbed. Any visible increase in the concentrations of heavy metal, after completion of work that disturbs the existing paint system, shall be removed at the Contractor's expense.

Air and soil sample laboratory analysis results, including results of additional samples taken after corrective action as recommended by the CIH, shall be submitted to the Engineer. The results shall be submitted both verbally within 48 hours after sampling and in writing with a copy to the Contractor, within 5 days after sampling. Sample analysis reports shall be prepared by the CIH as follows:

A. For both air and soil sample laboratory analysis results, the date and location of sample collection, sample number, contract number, bridge number, full name of the structure as shown on the contract plans, and District-County-Route-Kilometer Post will be required.
B. For air sample laboratory analysis results, the following will be required:

   1. List of emission control measures in place when air samples were ta
   2. Air sample results shall be compared to the appropriate PELs.
   3. Chain of custody forms.

REGISTERED PROFESSIONAL ENGINEER GREGORY BENKOVICH No. C 040518 Exp. 3/31/2009 CIVIL STATE OF CALIFORNIA

CONTRACT NO. 04-0120K4 CONTRACT CHANGE ORDER NO 127 SHEET 8 OF 20

4. Corrective action recommended by the CIH to ensure airborne metals exposure, outside either the containment system or work areas, is within specified limits.

C. For soil sample laboratory analysis results, the concentrations of heavy metal expressed as parts per million will be required.

Work area monitoring will be paid for on the basis of a lump sum price.

The contract lump sum price paid for work area monitoring shall include full compensation for furnishing all labor, materials, tools, equipment, and incidentals, and for doing all the work involved in collecting and analyzing samples of ambient air and soil for heavy metals, complete in place, including reporting the test results, as shown on the plans, as specified in the Standard Specifications and these special provisions, and as directed by the Engineer.

Containment System

At the option of the Contractor, the containment system shall consist of either (1) a ventilated containment structure, (2) vacuum shrouded surface preparation equipment and drapes, tarps, or other materials, or (3) an equivalent containment system. The containment system shall contain all water, resulting debris, and visible dust produced when the existing paint system is disturbed.

The containment system shall provide the clearances specified under "Maintaining Traffic" of these special provisions, except that when no clearances are specified a vertical clearance of 4.6 m and a horizontal clearance of 9.8 m shall be provided for the passage of public traffic.

Falsework or supports for the ventilated containment structure shall not extend below the vertical clearance level nor to the ground line at locations within the roadbed.

The ventilated containment structure shall conform to the provisions for falsework in Section 51-1.06, "Falsework," of the Standard Specifications.

The minimum total design load of the ventilated containment structure shall consist of the sum of the dead and live vertical loads. Dead load shall consist of the actual load of the ventilated containment structure. Live loads shall consist of a uniform load of not less than 2160 Pa, which includes 960 Pa of sand load, applied over the area supported, and in addition, a moving 4.5 kN concentrated load shall be applied to produce maximum stress in the main supporting elements. Assumed horizontal loads need not be included in the design of the ventilated containment structure.

The ventilated containment structure shall be supported with either rigid or flexible supports. The rigid or flexible containment materials on the containment structure shall retain airborne particles but may allow airflow through the containment materials. Flexible materials shall be supported and fastened to prevent escape of abrasive and blast materials due to whipping from traffic or wind and to maintain clearances.

All mating joints between the ventilated containment structure and the bridge shall be sealed. Sealing may be by overlapping of seams when using flexible materials or by using tape, caulking, or other sealing measures.

Multiple flap overlapping door tarps shall be used at entry ways to the ventilated containment structure to prevent dust or debris from escaping.

Baffles, louvers, flapper seals, or ducts shall be used at make-up air entry points to the ventilated containment structure to prevent escape of abrasives and resulting surface preparation debris.

The ventilated containment structure shall be properly maintained while work is in progress and shall not be changed from the approved working drawings without prior approval of the Engineer.

CONTRACT NO 04-0120R4 CONTRACT CHANGE ORDER NO 127 SHEET 9 OF 20

REGISTERED PROFESSIONAL ENGINEER GREGORY BENKOVIC No. C 040518 Exp. 3/31/2007 CIVIL STATE OF CALIFORNIA

The ventilation system in the ventilated containment structure shall be of the forced input airflow type with fans or blowers.

Negative air pressure shall be employed within the ventilated containment structure and will be verified by visual methods by observing the concave nature of the containment materials while taking into account wind effects or by using smoke or other visible means to observe airflow. The input airflow shall be properly balanced with the exhaust capacity throughout the range of operations.

The exhaust airflow of the ventilation system in the ventilated containment structure shall be forced into dust collectors (wet or dry) or bag houses.

Full compensation for the containment system shall be considered as included in the contract price paid for the item of work causing the existing paint system to be disturbed, and no additional compensation will be allowed therefor.

Protective Work Clothing and Hygiene Facilities

Wherever there is exposure or possible exposure to heavy metals or silica dust at the bridge site, the Contractor shall, for State personnel: (1) furnish, clean, and replace protective work clothing and (2) provide access to hygiene facilities. The furnishing, cleaning, and replacement of protective work clothing and providing access to hygiene facilities shall conform to the provisions of subsections (g), "Protective work clothing and equipment," and (i), "Hygiene facilities and practices," of Section 1532.1, "Lead," of the Construction Safety Orders, and will be required for no more than 3 people.

The protective work clothing and access to hygiene facilities shall be provided during exposure or possible exposure to heavy metals or silica dust at the bridge site and during the application of the undercoats of paint.

Protective work clothing and hygiene facilities shall be inspected and approved by the Engineer before being used by State personnel.

The protective work clothing shall remain the property of the Contractor at the completion of the contract.

Full compensation for protective work clothing and access to hygiene facilities for State personnel shall be considered as included in the contract price paid for the item of work causing the existing paint system to be disturbed, and no additional compensation will be allowed therefor.

BRIDGE REMOVAL

Removing bridges or portions of bridges shall conform to the provisions in Section 15-4, "Bridge Removal," of the Standard Specifications and these special provisions.

This work consists in general of removing portion of the railing of the existing inspection walkway and metal protruding from concrete surface of the Pier E1. as shown on the plans. The existing paint systems of the railing of the existing inspection walkway consist of lead based paint.

Removed materials shall be disposed of in conformance with the provisions in Section 7-1.13, "Disposal of Material Outside the Highway Right of Way," of the Standard Specifications.

CONTRACT NO. 04-0120R4
CONTRACT CHANGE ORDER NO 127
SHEET 10 OF 20

REGISTERED PROFESSIONAL ENGINEER
GREGORY BENKOVICH
No. C 040518
EXP. 3/31/2009
CIVIL
STATE OF CALIFORNIA

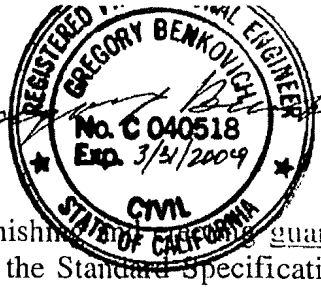

10-1. RTU-8 UTILITY PLATFORM

RTU-8 utility platform shall consist of furnishing, finishing, guard rail, ladder, and safety cage, as shown on the plans, as specified in the Standard Specifications and these special provisions, and as directed by the Engineer.

Attention is directed to "Welding" of these special provisions.

Guard railing shall conform to the provisions for steel bridge railing in Section 83-1.02, "Materials and Construction," of the Standard Specifications and these special provisions.

Ladder, safety cage, checkered plates, and all anchors, fastenings, hardware, accessories and other appurtenances necessary to complete the work shall conform to the provisions for miscellaneous bridge metal in Section 75, "Miscellaneous Metal," of the Standard Specifications and these special provisions.

Nonheaded anchor bolts shall conform to the requirements in ASTM Designation: F1554, Grade 36.

Anchor bolts of larger size shall not be substituted for the sizes shown on the plans.

Working drawings shall conform to the requirements in Section 5-1.02 "Plans and Working Drawings," of the Standard Specifications and these special provisions. Working drawings shall include supplements and calculations that are in addition to drawings.

Working drawing submittals shall include the following:

A. All ASTM or other material designations.
B. Fabrication plans including all details as shown on the plans. All dimensions and design tolerances shall be specified.
C. Installation plans including methods, materials, equipment, sequence, lifting mechanisms and locations.
D. Manufacturers specifications for bonding materials/
E. Manufacturer's specifications, anchor details and installation instructions for products used in miscellaneous metal fabrications.

Railings shall be preassembled in shop to the greatest extent possible to minimize field welding and assembly. Units shall be disassembled only as necessary for shipping and handling limitations. All units shall be clearly match marked for reassembly and installation.

All metal surfaces of components for RTU-8 utility platforms shall be hot-dip galvanized after fabrication in accordance with Section 75-1.05, "Galvanizing," of the Standard Specifications. The minimum weight of galvanized coating shall be 460 grams per square meter of surface area, except grates shall have a minimum of 610 grams per square meter of surface area.

Galvanized surfaces to be welded shall have galvanized coating removed a minimum of 4 inches from the intended weld zone. Grinding shall be used to remove galvanized coating. After welding, surfaces shall be repaired in conformance with the provisions for damaged surfaces in Section 75-1.05, "Galvanizing," of the Standard Specifications.

Drilling and bonding anchor bolts shall conform to the details shown on the plans, the provisions in Section 83-2.02D(1), "General," of the Standard Specifications, and these special provisions.

If reinforcement is encountered during drilling before the specified depth is attained, the Engineer shall be notified. Unless the Engineer approves coring through the reinforcement, the hole will be rejected and a new hole, in which reinforcement is not encountered, shall be drilled adjacent to the rejected hole to the depth shown on the plans.

CONTRACT NO. 04-0120K4
CONTRACT CHANGE ORDER NO 127
SHEET 11 OF 20

The contract unit price paid for RTU-8 utility platform shall include full compensation for furnishing all labor, materials, tools, equipment, and incidentals, and for doing all the work involved in constructing RTU-8 utility platform, complete in place, including checkered plates, galvanizing, and miscellaneous metal items, as shown on the plans, as specified in the Standard Specifications and these special provisions, and as directed by the Engineer.

Full compensation for drilling holes, including coring through reinforcement when approved by the Engineer, and bonding anchor bolts shall be considered as included in the contract unit price paid for RTU-8 utility platform, and no separate payment will be made therefor.

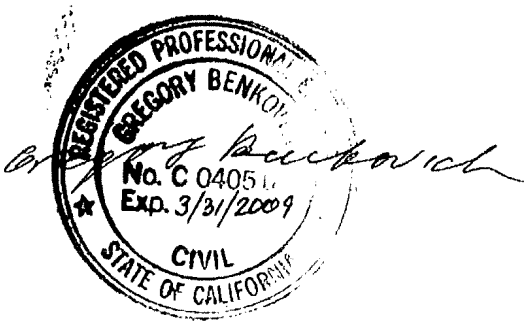

CONTRACT NO. 04-012024

CONTRACT CHANGE ORDER NO 127

SHEET 12 OF 20

DWG NO.	DRAWING TITLE
AS-1	INDEX OF DRAWINGS GENERAL STRUCTURAL NOTES
AS-2	GENERAL PLAN AND REMOVAL DETAILS
AS-3	GUARDRAIL PLAN
AS-4	BASE PLATE AND ANCHOR BOLTS LAYOUT
AS-5	SECTIONS
AS-6	SECTIONS AND DETAILS
AS-7	SECTIONS
AS-8	DETAILS

GENERAL NOTES

A. STRUCTURAL STEEL

A1. All structural steel shall be AASHTO M270M Grade 36.

A2. Steel pipe shall be ASTM A-53 grade B.

A3. All bolts shall be conforming to ASTM A325 and shall be 19.05 mm diameter unless noted otherwise on plans.

A4. All structural steel shall be Hot-dipped galvanized.

B. GROUT

B1. Grout under railing base plates shall be sand cement non-shrink grout conforming to AS W C1107 with ultimate compressive strength of 35 MPa at 28 days.

C. DESIGN LOADS

C1. Railing Load
The design loading for railing shall W=0.73 kN per linear meter (50 lb per linear foot), transversely and vertically, acting simultaneously on each longitudinal member.

C2. Wind Load
The platform is designed for uniformly distributed wind load on vertical surfaces of 2.4 kPa (50psf)

D. CODES AND STANDARDS

D.1 The structure has been designed in accordance with the following applicable codes and industry standards:

1. CBC — California Building Code, 2001 Edition.
2. ACI — American Concrete Institute "Building Code Requirements for Reinforced Concrete (ACI 318R-05)"
3. AISC — American Institute of Steel Construction "Specification for structural steel buildings" (ANSI/AISC 360 05)

ABBREVIATIONS

AB	Anchor Bolt
&	And
@	At
∠	Angle
Add'l	Additional
Bm	Beam
Bgr	Bearing
Bott	Bottom
B.O.	Bottom of
C	Channel(Structural)
Col	Column
Conc	Concrete
Const	Construction
Const Jt	Construction Joint
Cont	Continuous
Contr	Contraction
Comp	Composite
℄	Center Line
Clr	Clear
DL	Dead Load
Deg or °	Degree
Det	Detail
Diag	Diagonal
Dia or ø	Diameter
Dim	Dimension
Dbl	Double
DN	Down
Dwg	Drawing
Do.	Ditto
Ea	Each
EF	Each Face
EW	Each way
EL	Elevation
EQ or =	Equal
Exp	Expansion
F to F	Face to Face
Fin	Finish
F.S.	For Side
Ga	Gage
Galv	Galvanized
Gr	Grade
HR	Hand Rail
Ht	Height
HP	High Point
Horiz	Horizontal
ID	Inside Diameter
IF	inside Face
Inv	Invert
Jt	Joint
kg	Kilogram
kN	Kilonewton
kNa	Kilopascal
LS	Left side
L	Length
Lin	Linear, Lineal
LL	Live Load
Lg	Long
LP	Low Point
MB	Machine Bolt
Mtl	Material
Max	Maximum
MPa	Megapascal
m	Meter
mm	Millimeter
Min	Minimum
Misc	Miscellaneous
NF	Near Face
Neg	Negative
Nom	Nominal
NIC	Not in Contract
No.	Number
N.S.	Near Side
OC	On Center
Opng	Opening
Opp H	Opposite Hand
OD	Outside Diameter
O.F.	Outside Face
PL	Plate
R	Radius
Ref	Reference
Reinf	Reinforcing
RC	Reinforced Concrete
Rev	Revision or Revise
RS	Right Side
Sch	Schedule
Sect	Section
Sht	Sheet
Sim	Similar
Spec	Specification
SQ	Square
m²	Square Meter
mm	Square Millimeter
Std	Standard
Stl	Steel
Stiff	Stiffener
Sym	Symmetrical
T & B	Top and Bottom
T.O.	Top of
T.O.C	Top of Concrete
T.O.P	Top of Plate
T.O.S	Top of Steel
Typ	Typical
UNO	Unless Noted Otherwise
Vert	Vertical
WP	Work Point
Wt	Weight
WL	Wind Load
W	With

SYMBOLS

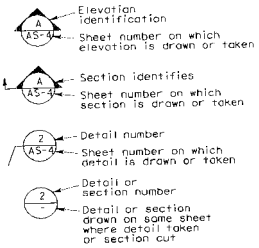

DIST	COUNTY	ROUTE	KILOMETER POST TOTAL PROJECT	SHEET NO	TOTAL SHEETS
04	SF	80	12.6/13.2		

Gregory Bourdet
REGISTERED CIVIL ENGINEER
02/27/2008
PLANS APPROVAL DATE

The State of California or its officers or agents shall not be responsible for the accuracy or completeness of electronic copies of this plan sheet.

Parsons Brinckerhoff Quade & Douglas, Inc.
303 Second Street, Suite 700N
San Francisco, CA 94107

Caltrans now has a web site! To get to the web site, go to: http://www.dot.ca.gov/hq

CONTRACT NO. 04-0120R4

CONTRACT CHANGE ORDER NO. 127

SHEET 13 OF 20

ALL DIMENSIONS ARE IN MILLIMETERS UNLESS OTHERWISE SHOWN.

BERNARD CHAN
DESIGN ENGINEER
SIGN OFF DATE
DESIGN DETAIL SHEET (METRIC) REV. 3/1/99

DESIGN	BY G. Benkovich	CHECKED M.S. Owyang	
DETAILS	BY G. Kurniawaksyo	CHECKED G. Benkovich	
QUANTITIES	BY G. Benkovich	CHECKED M.S. Owyang	

PREPARED FOR THE STATE OF CALIFORNIA
DEPARTMENT OF TRANSPORTATION

Mark Grodzki
PROJECT ENGINEER

BRIDGE NO. 34-0006
NA

CU 04251
EA 0120R1

DISREGARD PRINTS BEARING EARLIER REVISION DATES

ORIGINAL SCALE IN MILLIMETERS FOR REDUCED PLANS 0 10 20 30 40 50 60 70 80 90 100

FILE => I:\13\13103\SouthDetour\CCO RTU-8\rtu-gs001.dgn

RTU-8 UTILITY PLATFORM
~~SERVICE PLATFORM~~ GENERAL STRUCTURAL NOTES

AS-1

REVISION DATES (PRELIMINARY STAGE ONLY)

SHEET OF

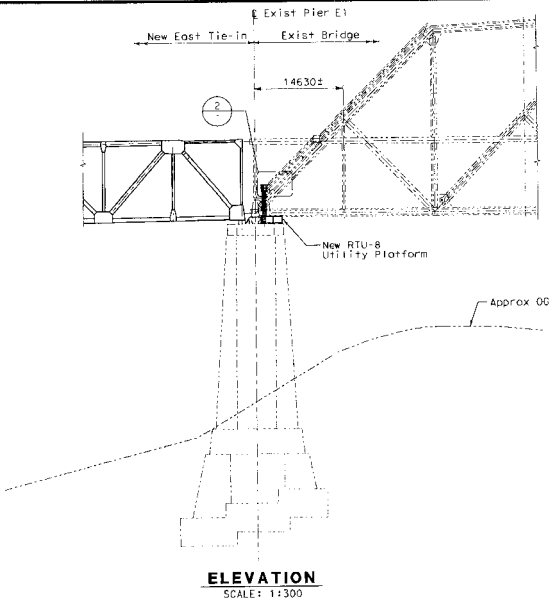

ELEVATION
SCALE: 1:300

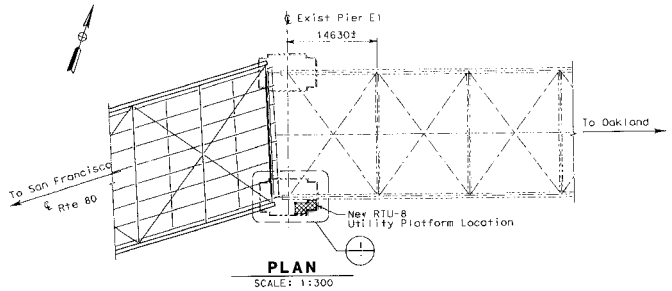

PLAN
SCALE: 1:300

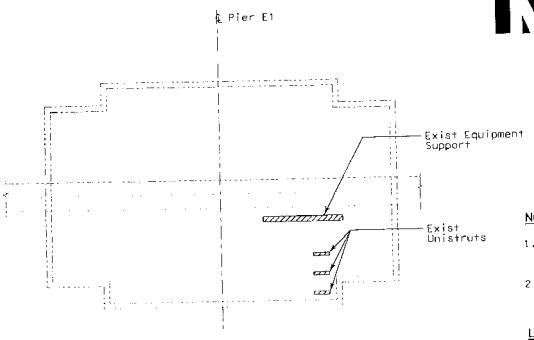

REMOVAL PLAN

1 DETAIL
SCALE: 1:50

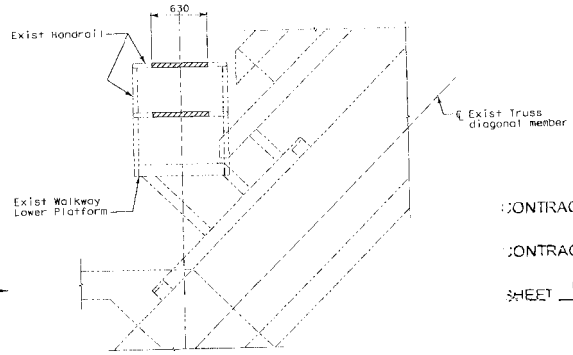

REMOVAL ELEVATION

2 DETAIL
SCALE: NTS

Caltrans Metric

DIST	COUNTY	ROUTE	KILOMETER POST TOTAL PROJECT	SHEET NO	TOTAL SHEETS
04	SF	80	12.6/13.2		

Gregory Benkovich
REGISTERED CIVIL ENGINEER

02/27/2008
PLANS APPROVAL DATE

Gregory Benkovich No. C40518 Exp. 12/31/09 CIVIL — REGISTERED PROFESSIONAL ENGINEER — STATE OF CALIFORNIA

The State of California or its officers or agents shall not be responsible for the accuracy or completeness of electronic copies of this plan sheet.

Parsons Brinckerhoff Quade & Douglas, Inc.
303 Second Street, Suite 700N
San Francisco, CA 94107

Caltrans now has a web site! To get to the web site, go to: http://www.dot.ca.gov

NOTES:

1. The contractor shall verify all controlling field dimensions before ordering or fabricating any material.
2. For structural notes see "General structural notes" sheet AS-1.

LEGEND:

- Indicates removal portion
- Indicate area occupied by new RTU-8 utility platform

CONTRACT NO. 04-0120R4

CONTRACT CHANGE ORDER NO. 127

SHEET 14 OF 20

ALL DIMENSIONS ARE IN MILLIMETERS UNLESS OTHERWISE SHOWN.

BERNARD CHAN
DESIGN OVERSIGHT
SIGN OFF DATE
DESIGN DETAIL SHEET (METRIC) REV. 5/1/98

DESIGN	BY G. Benkovich	CHECKED M.S. Owyang	
DETAILS	BY C. Rumpeveyco	CHECKED G. Benkovich	
QUANTITIES	BY G. Benkovich	CHECKED M.S. Owyang	

PREPARED FOR THE STATE OF CALIFORNIA
DEPARTMENT OF TRANSPORTATION

Mark Gradzki
PROJECT ENGINEER

BRIDGE NO. 34-0006
KILOMETER POST NA

RTU-8 UTILITY PLATFORM
GENERAL PLAN AND REMOVAL DETAILS AS-2

ORIGINAL SCALE IN MILLIMETERS FOR REVISED PLANS 0 10 20 30 40 50 60 70 80 90 100

CU 04251
EA 0120R1

DISREGARD PRINTS BEARING EARLIER REVISION DATES

REVISION DATES (PRELIMINARY STAGE ONLY)

SHEET OF

PW:P:\Projects\Oakland\Detour\CCO RTU-8\RTU-8a007.dgn

USER NAME = rfeist DATE PLOTTED = 3:12:29 pm

DIST	COUNTY	ROUTE	KILOMETER POST TOTAL PROJECT	SHEET NO	TOTAL SHEETS
04	SF	BO	12.6/13.2		

Caltrans Metric

REGISTERED CIVIL ENGINEER

02/27/2008
PLANS APPROVAL DATE

The State of California or its officers or agents shall not be responsible for the accuracy or completeness of electronic copies of this plan sheet.

REGISTERED PROFESSIONAL ENGINEER
Gregory Benkovich
No. C40518
Exp. 3/31/09
CIVIL
STATE OF CALIFORNIA

Parsons Brinckerhoff Quade & Douglas, Inc.
303 Second Street, Suite 700N
San Francisco, CA 94107

Caltrans now has a web site! To get to the web site, go to: http://www.dot.ca.gov

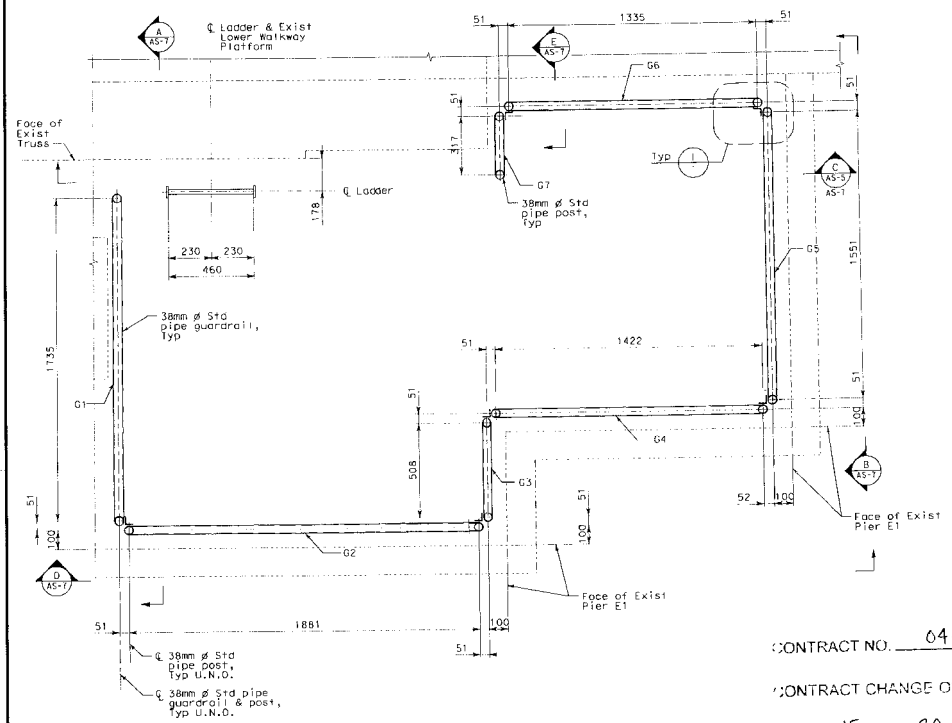

GUARDRAIL PLAN
SCALE: 1:10

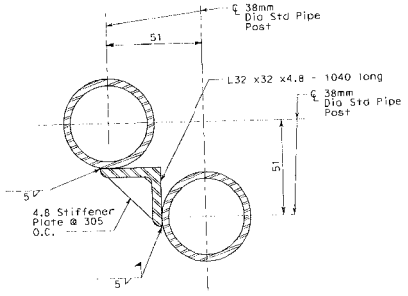

1 DETAIL
SCALE: 1:1

CONTRACT NO. 04-0120R4

CONTRACT CHANGE ORDER NO 127

SHEET 15 OF 20

NOTES:

1. The contractor shall verify all controlling field dimensions before ordering or fabricating any material.
2. For structural notes see "General structural notes" sheet AS-1.

LEGEND:

G1 - Indicated guardrail panel type

ALL DIMENSIONS ARE IN MILLIMETERS UNLESS OTHERWISE SHOWN

BERNARD CHAN DESIGN OVERSIGHT	DESIGN	BY G. Benkovich	CHECKED M.S. Dwyang	PREPARED FOR THE STATE OF CALIFORNIA DEPARTMENT OF TRANSPORTATION	Mark Grodzki PROJECT ENGINEER	BRIDGE NO. 34-0006	RTU-8 UTILITY PLATFORM
	DETAILS	BY G. Kurnovskaya	CHECKED G. Benkovich			NA	GUARDRAIL PLAN AS-3
SIGN OFF DATE	QUANTITIES	BY G. Benkovich	CHECKED M.S. Dwyang				

DESIGN DETAIL SHEET (METRIC) (REV. 3/1/98)

ORIGINAL SCALE IN MILLIMETERS FOR REDUCED PLANS 0 10 20 30 40 50 60 70 80 90 100

CU 04251
EA 0120R1

DISREGARD PRINTS BEARING EARLIER REVISION DATES

REVISION DATES (PRELIMINARY STAGE ONLY)

SHEET OF

FILE => T:\13103\SouthDetour\CCO RTU-8\rtu-as003.dgn

DIST	COUNTY	ROUTE	KILOMETER POST TOTAL PROJECT	SHEET No	TOTAL SHEETS
04	SF	80	12.6/13.2		

Caltrans Metric

REGISTERED CIVIL ENGINEER

02/27/2008
PLANS APPROVAL DATE

The State of California or its officers or agents shall not be responsible for the accuracy or completeness of electronic copies of this plan sheet.

REGISTERED PROFESSIONAL ENGINEER Gregory Benkovich No. C40512 Exp. 3/31/09 CIVIL STATE OF CALIFORNIA

Parsons Brinckerhoff Quade & Douglas, Inc.
303 Second Street, Suite 700N
San Francisco, CA 94107

Caltrans now has a web site! To get to the web site, go to: http://www.dot.ca.gov

NOTES:

1. The contractor shall verify all controlling field dimensions before ordering or fabricating any material.
2. For structural notes see "General structural notes" sheet AS-1.
3. All base plate types are type 1 U.N.O.

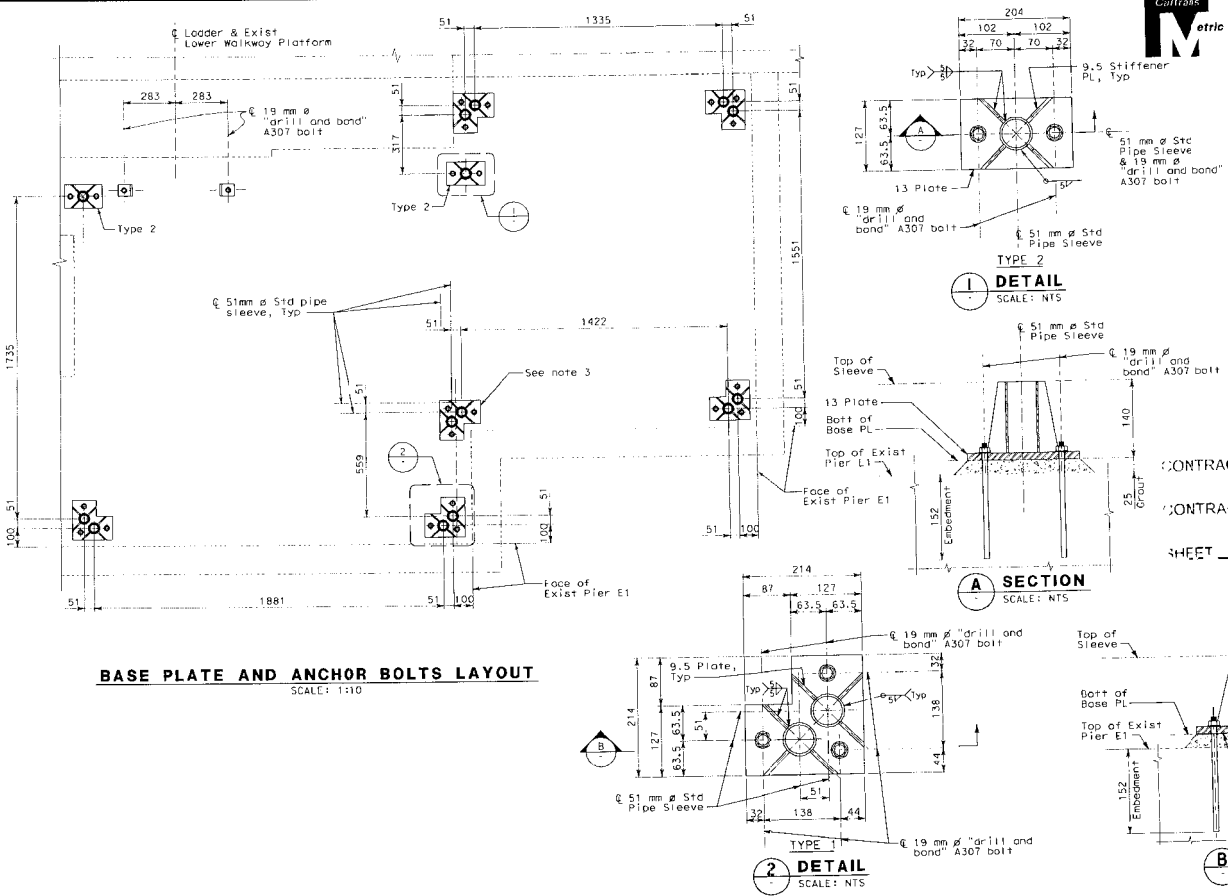

BASE PLATE AND ANCHOR BOLTS LAYOUT
SCALE: 1:10

CONTRACT NO. 04-0120R4

CONTRACT CHANGE ORDER NO 127

SHEET 16 OF 20

ALL DIMENSIONS ARE IN MILLIMETERS UNLESS OTHERWISE SHOWN

BERNARD CHAN DESIGN OVERSIGHT SIGN OFF DATE	DESIGN	BY G. Benkovich	CHECKED M.S. Owyang	PREPARED FOR THE STATE OF CALIFORNIA DEPARTMENT OF TRANSPORTATION	Mark Grodzki PROJECT ENGINEER	BRIDGE NO. 34-0006 KILOMETER POST NA	RTU-8 UTILITY PLATFORM ~~BASE PLATE~~ AND ANCHOR BOLTS LAYOUT AS-4
	DETAILED	BY G. Kurdovskaya	CHECKED G. Benkovich				
	QUANTITIES	BY G. Benkovich	CHECKED M.S. Owyang				

DESIGN DETAIL SHEET (METRIC) REV. 3/1/98

ORIGINAL SCALE IN MILLIMETERS FOR REDUCED PLANS 0 10 20 30 40 50 60 70 80 90 100

CU 04251
EA 0120R1

DISREGARD PRINTS BEARING EARLIER REVISION DATES

REVISION DATES (PRELIMINARY STAGE ONLY)

SHEET OF

FILE => I:\13103\SouthDetour\CCO RTU-8\rtu-as004.dgn

USERNAME => rdyes DATE PLOTTED => 9/25/2008 TIME PLOTTED => 3:12:50 PM

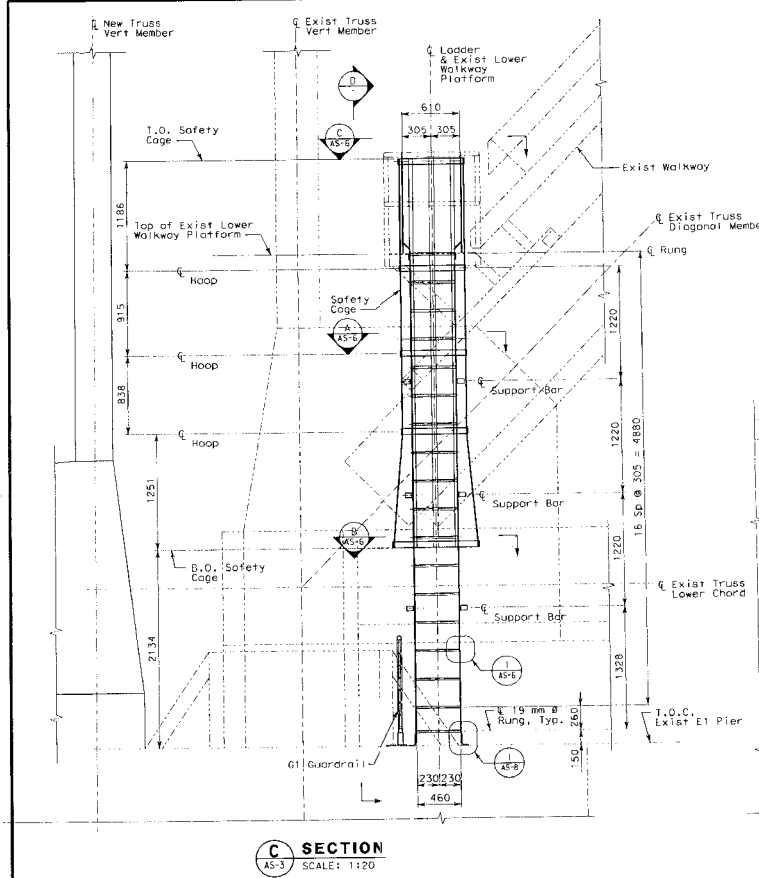

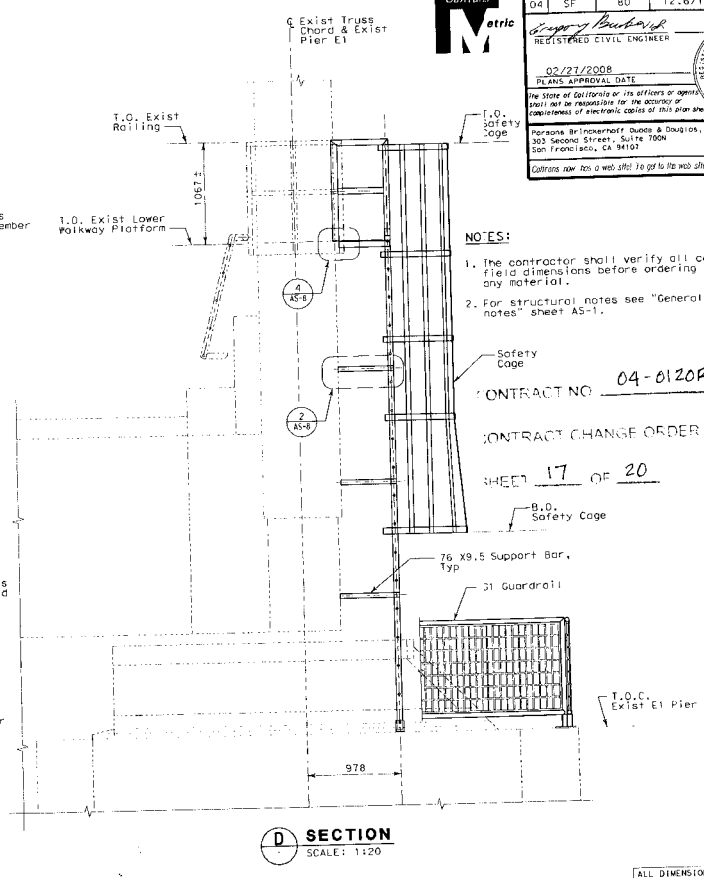

DIST	COUNTY	ROUTE	KILOMETER POST TOTAL PROJECT	SHEET NO.	TOTAL SHEETS
04	SF	80	12.6/13.2		

Caltrans Metric

Gregory Benkovich
REGISTERED CIVIL ENGINEER

02/27/2008
PLANS APPROVAL DATE

The State of California or its officers or agents shall not be responsible for the accuracy or completeness of electronic copies of this plan sheet.

Parsons Brinckerhoff Quade & Douglas, Inc.
303 Second Street, Suite 700N
San Francisco, CA 94107

Caltrans now has a web site! To get to the web site, go to: http://www.dot.ca.gov

NOTES:

1. The contractor shall verify all controlling field dimensions before ordering or fabricating any material.
2. For structural notes see "General structural notes" sheet AS-1.

CONTRACT NO. 04-0120R4

CONTRACT CHANGE ORDER NO. 127

SHEET 17 OF 20

ALL DIMENSIONS ARE IN MILLIMETERS UNLESS OTHERWISE SHOWN

BERNARD CHAN DESIGN OVERSIGHT SIGN OFF DATE	DESIGN	BY G. Benkovich	CHECKED M.S. Owyang	PREPARED FOR THE STATE OF CALIFORNIA DEPARTMENT OF TRANSPORTATION	Mark Gradzki PROJECT ENGINEER	BRIDGE NO. 34-0006 CALSTER PWPS NA	RTU-8 UTILITY PLATFORM SECTIONS	AS-5
	LAYOUT	BY C. Benkovich	CHECKED C. Benkovich					
	QUANTITIES	BY G. Benkovich	CHECKED M.S. Owyang					

DESIGN DETAIL SHEET (METRIC) (REV. 3/1/98)

ORIGINAL SCALE IN MILLIMETERS FOR REDUCED PLANS 0 10 20 30 40 50 60 70 80 90 100

CU 04251
EA 0120R1

DISREGARD PRINTS BEARING EARLIER REVISION DATES

REVISION DATES (PRELIMINARY STAGE ONLY)

SHEET 17

FILE = S:\TMS\3105\Southdetour\CDD RTU-8\RTU-08005.dgn

USER NAME = bchan PLOTTED = 2/27/2008 11:54:40 AM

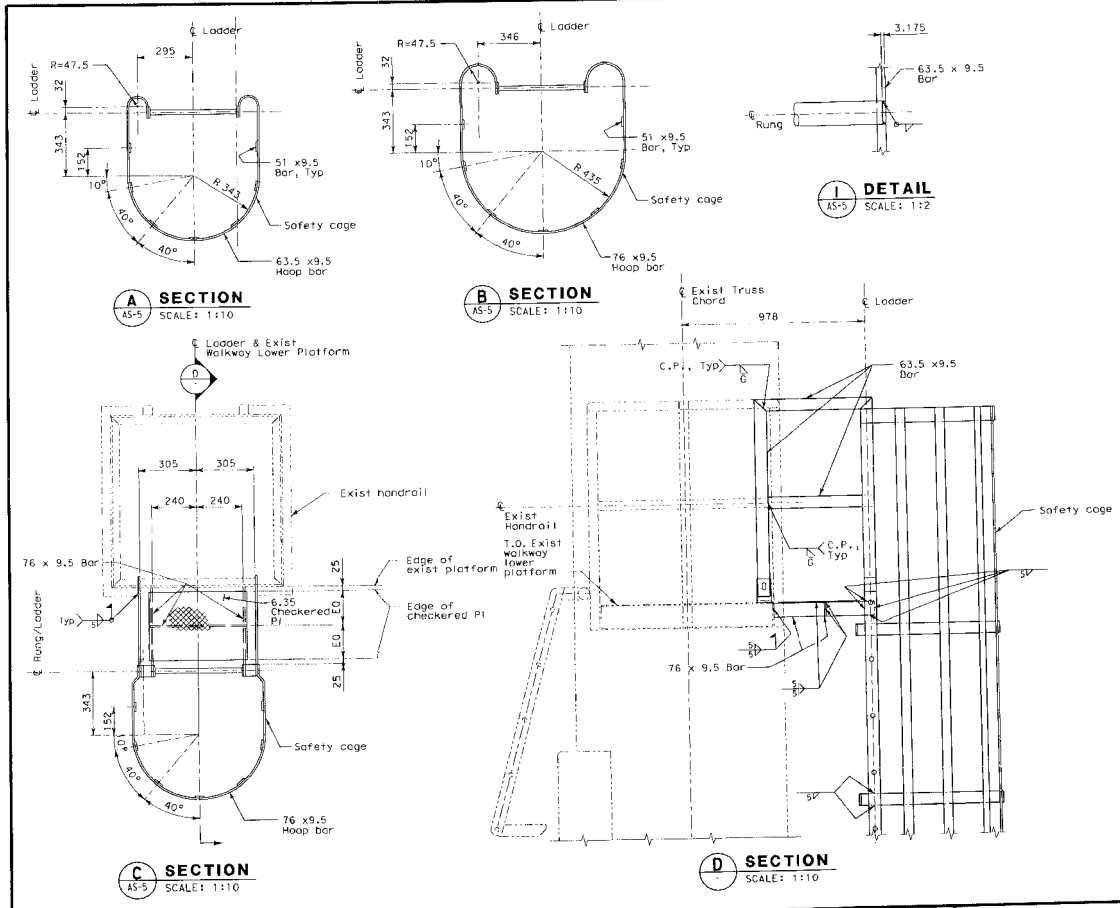

A SECTION
AS-5 SCALE: 1:10

B SECTION
AS-5 SCALE: 1:10

I DETAIL
AS-5 SCALE: 1:2

C SECTION
AS-5 SCALE: 1:10

D SECTION
SCALE: 1:10

DIST	COUNTY	ROUTE	KILOMETER POST TOTAL PROJECT	SHEET No	TOTAL SHEETS
04	SF	80	12.6/13.2		

Caltrans Metric

Gregory Benkovich
REGISTERED CIVIL ENGINEER

02/27/2008
PLANS APPROVAL DATE

REGISTERED PROFESSIONAL ENGINEER
Gregory Benkovich
No. C40518
Exp. 3/31/09
CIVIL
STATE OF CALIFORNIA

The State of California or its officers or agents shall not be responsible for the accuracy or completeness of electronic copies of this plan sheet.

Parsons Brinckerhoff Quade & Douglas, Inc.
303 Second Street, Suite 700N
San Francisco, CA 94107

Caltrans now has a web site! To get to the web site, go to: http://www.dot.ca.gov

NOTES:

1. The contractor shall verify all controlling field dimensions before ordering or fabricating any material.
2. For structural notes see "General structural notes" sheet AS-1.

CONTRACT NO. 04-0120R4

CONTRACT CHANGE ORDER NO. 127

SHEET 18 OF 20

ALL DIMENSIONS ARE IN MILLIMETERS UNLESS OTHERWISE SHOWN

BERNARD CHAN
DESIGN OVERSIGHT

SIGN OFF DATE

DESIGN DETAIL SHEET (METRIC) REV. 3/1/98

DESIGN	BY G. Benkovich	CHECKED M.S. Owyang	
DETAILS	BY O. Kurnovskaya	CHECKED G. Benkovich	
QUANTITIES	BY G. Benkovich	CHECKED M.S. Owyang	

ORIGINAL SCALE IN MILLIMETERS FOR REDUCED PLANS 0 10 20 30 40 50 60 70 80 90 100

PREPARED FOR THE STATE OF CALIFORNIA DEPARTMENT OF TRANSPORTATION

Mark Grodzki
PROJECT ENGINEER

BRIDGE NO. 34-0006
KILOMETER POST NA

CU 04251
EA 0120R1

DISREGARD PRINTS BEARING EARLIER REVISION DATES

FILE => T:\13103\SouthDetour\CCO RTU-8\rtu-as006.dgn

RTU-8 UTILITY PLATFORM

SECTIONS AND DETAIL

AS-6

REVISION DATES (PRELIMINARY STAGE ONLY)

SHEET 21

DATE PLOTTED => 3/31/2008

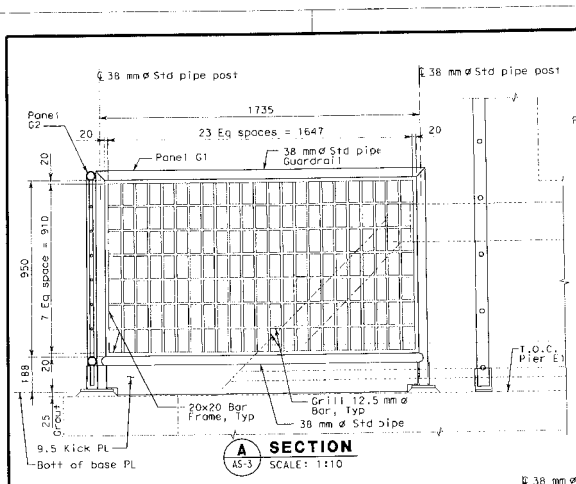

A SECTION
AS-3 SCALE: 1:10

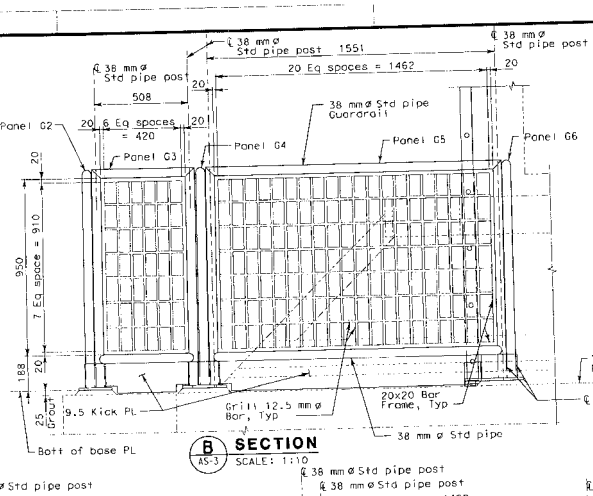

B SECTION
AS-3 SCALE: 1:10

Caltrans Metric

DIST	COUNTY	ROUTE	KILOMETER POST TOTAL PROJECT	SHEET NO.	TOTAL SHEETS
04	SF	80	12.6/13.2		

Gregory Burkard
REGISTERED CIVIL ENGINEER
02/27/2008
PLANS APPROVAL DATE
REGISTERED PROFESSIONAL ENGINEER Gregory Burkard No. C40518 CIVIL EXP. 3/31/09 STATE OF CALIFORNIA
The State of California or its officers or agents shall not be responsible for the accuracy or completeness of electronic copies of this plan sheet.

Parsons Brinckerhoff Quade & Douglas, Inc.
303 Second Street, Suite 700N
San Francisco, CA 94107

Caltrans now has a web site! To get to the web site, go to: http://www.dot.ca.gov/

NOTES:

1. The contractor shall verify all controlling field dimensions before ordering or fabricating any material.
2. For structural notes see "General structural notes" sheet AS-1.

CONTRACT NO. 04-0120R4

CONTRACT CHANGE ORDER NO. 127

SHEET 19 OF 20

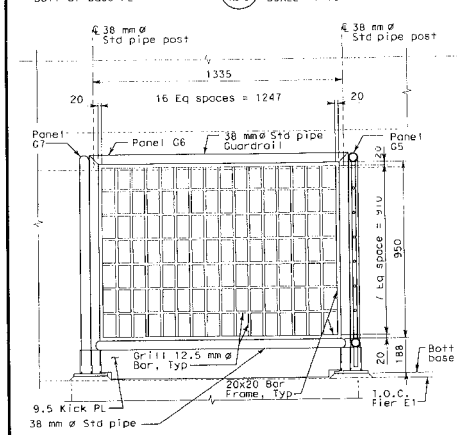

C SECTION
AS-3 SCALE: 1:10

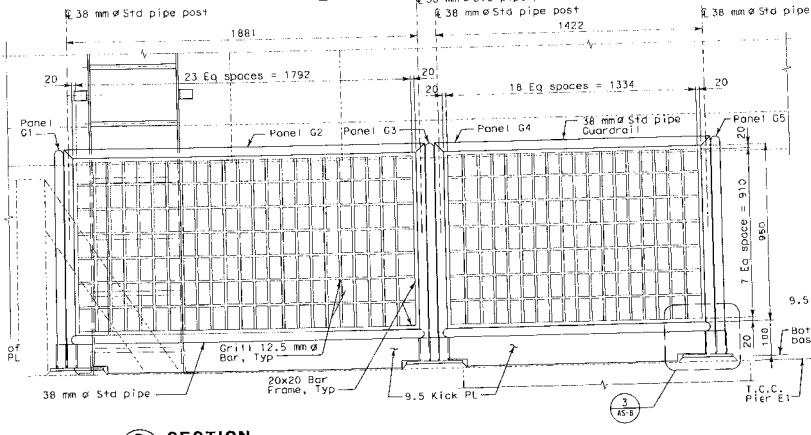

D SECTION
AS-3 SCALE: 1:10

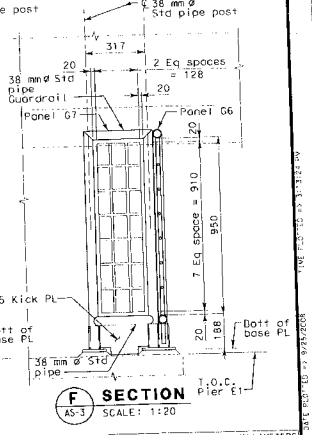

F SECTION
AS-3 SCALE: 1:20

ALL DIMENSIONS ARE IN MILLIMETERS UNLESS OTHERWISE SHOWN

BERNARD CHAN	DESIGN	BY G. Benkovich	CHECKED W.S. Owyang	PREPARED FOR THE STATE OF CALIFORNIA DEPARTMENT OF TRANSPORTATION	Mark Grodzki
DESIGN OVERSIGHT	DETAILS	BY O. Kurnowskaya	CHECKED C. Benkovich		PROJECT ENGINEER
SIGN OFF DATE	QUANTITIES	BY G. Benkovich	CHECKED W.S. Owyang		

BRIDGE NO. 34-0006
AS-CONSTR. POST NA

CU 04251
EA 0120R1

DISREGARD PRINTS BEARING EARLIER REVISION DATES

REVISION DATES (PRELIMINARY STAGE ONLY)

ORIGINAL SCALE IN MILLIMETERS FOR REDUCED PLANS 0 10 20 30 40 50 60 70 80 90 100

DESIGN DETAIL SHEET (METRIC) (REV. 3/1998)

File =>1:\r1\13183\SouthBetour\RTU-8\rtu-as07.dgn

RTU-8 UTILITY PLATFORM

SECTIONS

AS-7

SHEET 19 OF 20

DATE PLOTTED => 9/25/2008 15:49:51
LINE 1.5 PEN 1 => 3.3124 MM

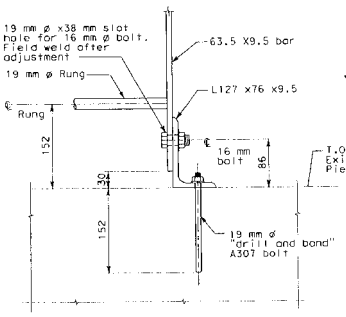

1 DETAIL AS-5 SCALE: NTS

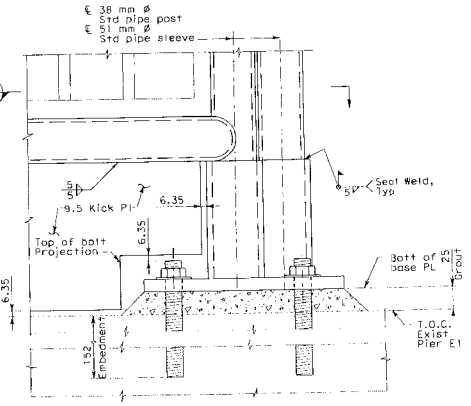

3 DETAIL AS-7 SCALE: 1:2

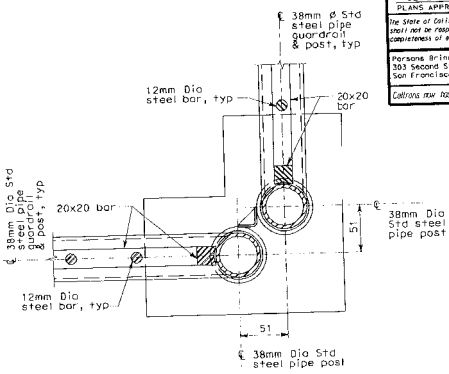

A SECTION AS-5 SCALE: 1:2

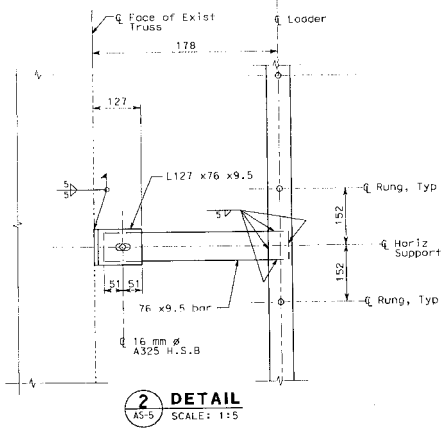

2 DETAIL AS-5 SCALE: 1:5

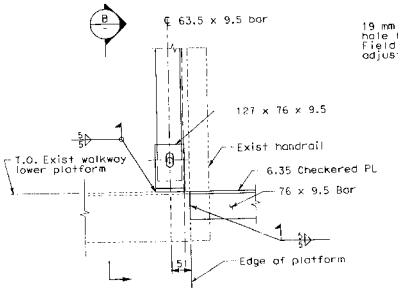

4 DETAIL AS-5 SCALE: 1:5

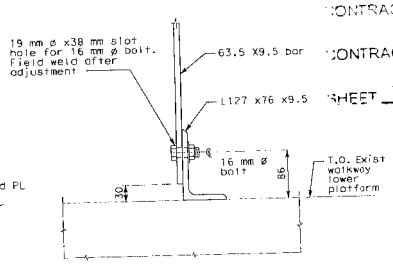

B SECTION AS-5 SCALE: NTS

NOTES:

1. The contractor shall verify all controlling field dimensions before ordering or fabricating any material.
2. For structural notes see "General structural notes" sheet AS-1.

ALL DIMENSIONS ARE IN MILLIMETERS UNLESS OTHERWISE SHOWN

DIST	COUNTY	ROUTE	KILOMETER POST TOTAL PROJECT	SHEET NO.	TOTAL SHEETS
04	SF	80	12.6/13.2		

Gregory Benkovich
REGISTERED CIVIL ENGINEER
02/27/2008
PLANS APPROVAL DATE

The State of California or its officers or agents shall not be responsible for the accuracy or completeness of electronic copies of this plan sheet.

Persons Brinckerhoff Quade & Douglas, Inc.
303 Second Street, Suite 700N
San Francisco, CA 94107

Caltrans now has a web site! To get to the web site, go to: http://www.dot.ca.gov

CONTRACT NO. 04-0120R4
CONTRACT CHANGE ORDER NO. 127
SHEET 20 OF 20

BERNARD CHAM DESIGN OVERSIGHT		DESIGN	BY G. Benkovich	CHECKED M.S. Owyang	PREPARED FOR THE STATE OF CALIFORNIA DEPARTMENT OF TRANSPORTATION
		DETAILS	BY G. Benkovich	CHECKED G. Benkovich	
SIGN OFF DATE		QUANTITIES	BY G. Benkovich	CHECKED M.S. Owyang	

Mark Grodzki
PROJECT ENGINEER

BRIDGE NO. 34-0006
NA

CU 04251
EA 0120R1

DISREGARD PRINTS DATED PRIOR TO: NA

RTU-8 UTILITY PLATFORM
DETAILS
AS-8

REVISION DATES (WHEN APPROVED STATE ONLY)

SHEET OF

DESIGN DETAIL SHEET (METRIC) REV. 3/1/99

ORIGINAL SCALE IN MILLIMETERS FOR REDUCED PLANS 0 10 20 30 40 50 60 70 80 90 100

I:\Cl-3\1\1\1301\Submittal\CCO RTU-8\rtu-ao08.dgn

DATE PLOTTED = 27-FEB-08 13:56:56

STATE OF CALIFORNIA - DEPARTMENT OF TRANSPORTATION

CONTRACT CHANGE ORDER

Change Requested by: Engineer

CCO 128	Suppl. No. 0	Contract No. 04 - 0120R4	Road SF-80-12.6/13.2	FED. AID LOC.: ACBRIM-080-1(097)N

To: **CC MYERS INC**

You are directed to make the following changes from the plans and specifications or do the following described work not included in the plans and specifications for this contract. ***NOTE: This change order is not effective until approved by the Engineer.***

Description of work to be done, estimate of quantities and prices to be paid. (Segregate between additional work at contract price, agreed price and force account.) Unless otherwise stated, rates for rental of equipment cover only such time as equipment is actually used and no allowance will be made for idle time. This last percentage shown is the net accumulated increase or decrease from the original quantity in the Engineer's Estimate.

Perform all water line work in accordance with Section 10-4.01, Mechanical Work, of the Contract Special Provisions and as shown on Sheets 3 through 8 of this change order.

Estimate of Decrease in Contract Item at Contract Price:

Item No. 81: 12 NPS WATER MAIN					
-410 M	(-100.00%)	$900.00 /M	=	-$369,000.00	(-182.50%)
Item No. 82: 4 NPS WATER LINE					
-410 M	(-100.00%)	$560.00 /M	=	-$229,600.00	(-182.50%)

Total Cost for Decrease in Contract Item.....($598,600.00)

In accordance with Section 4-1.03B(3), "Eliminated Items," of the Standard Specifications, the adjustment due to the elimination of Contract Item # 81, 12 NPS Water Main and Contract Item # 82, 4 NPS Water Line is zero.

Extra Work at Lump Sum:

As authorized by the Engineer, furnish and install 12 NPS and 4 NPS water line in the Temporary Bypass Structure (Bridge No. 34-0006 (TEMP)).

For this work, the Contractor will be paid the sum of $1,487,138.43, which constitutes full and complete compensation, including all markups and incidentals, for the work of this change.

Total Cost of Extra Work at Lump Sum $1,487,138.43

Flagging costs associated with this work shall be paid under Contract Change Order No. 1 with these costs being paid at 50% by the Department. The remaining flagging costs are considered to be included in the lump sum payment made under this change order.

Estimated Cost: **Increase** ☑ **Decrease** ☐ **$888,538.43**

By reason of this order the time of completion will be adjusted as follows: 0 days

Submitted by		
Signature	**Resident Engineer** BILL CASEY	**Date** 9-13-09
Approval Recommended by		
Signature Deanna Vilcheck	**Area Construction Manager** DEANNA VILCHECK	**Date** 8/17/09
Engineer Approval by		
Signature Deanna Vilcheck	**Area Construction Manager** DEANNA VILCHECK	**Date** 10/7/09

We the undersigned contractor, have given careful consideration to the change proposed and agree, if this proposal is approved, that we will provide all equipment, furnish the materials, except as may otherwise be noted above, and perform all services necessary for the work above specified, and will accept as full payment therefor the prices shown above.

NOTE: If you, the contractor, do not sign acceptance of this order, your attention is directed to the requirements of the specifications as to proceeding with the ordered work and filing a written protest within the time therein specified.

Contractor Acceptance by		
Signature	**(Print name and title)** DANIEL E. HAMICK, PRESIDENT	**Date** 10/02/09

DIST	COUNTY	ROUTE	KILOMETER POST/TOTAL PROJECT	SHEET No	TOTAL SHEETS
04	Ala	80	12.6/13.2		

07-08-09
REGISTERED CIVIL ENGINEER

REGISTERED PROFESSIONAL ENGINEER
JOHN D. COAD, JR.
No. 22566-M
Exp. 12-31-09
MECHANICAL
STATE OF CALIFORNIA

PLANS APPROVAL DATE

The State of California or its officers or agents shall not be responsible for the accuracy or completeness of electronic copies of this plan sheet.

PB Americas, Inc
303 Second Street, Suite 700N
San Francisco, CA 94107

Caltrans now has a web site! To get to the web site, go to: http://www.dot.ca.gov

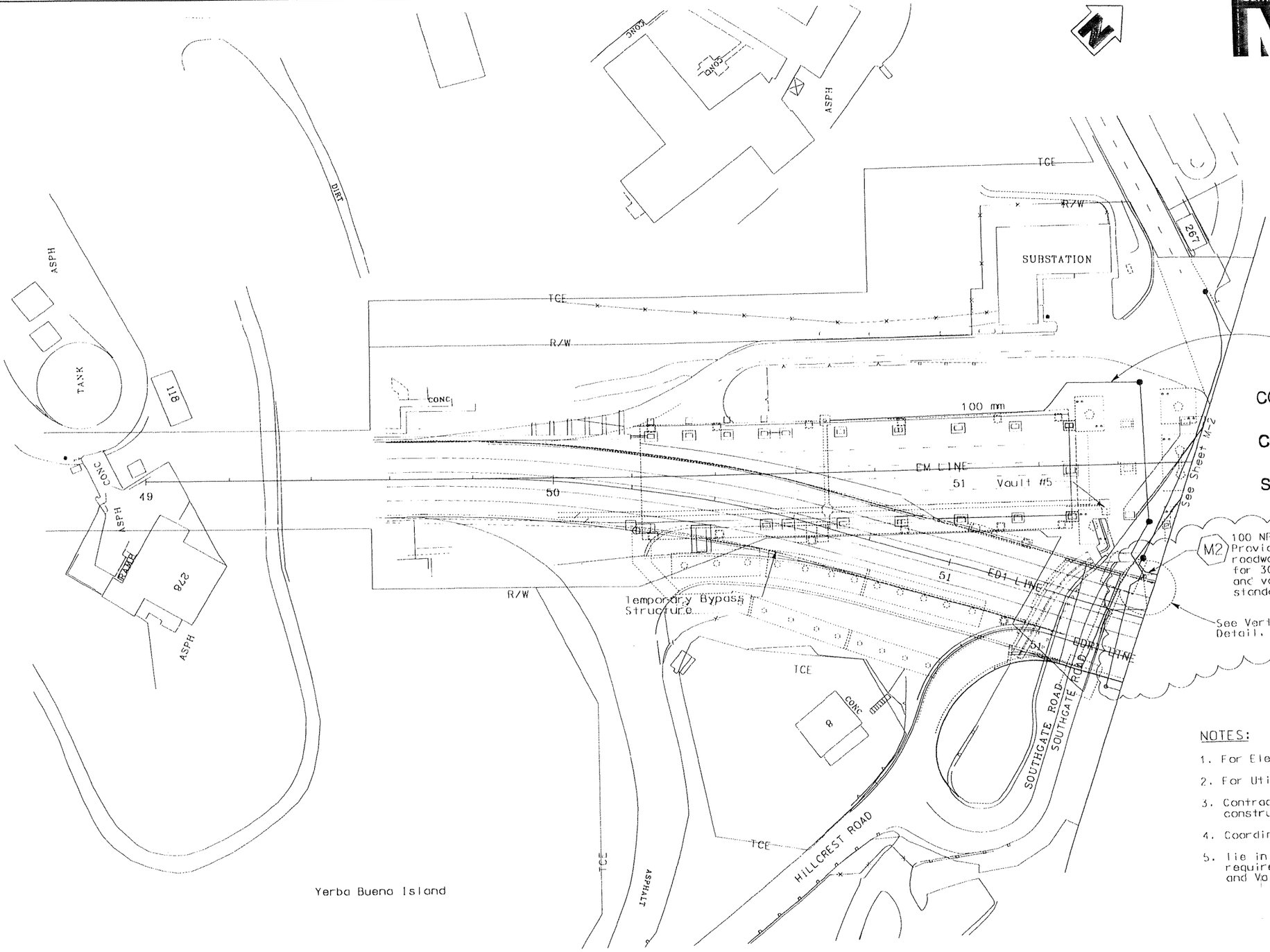

LEGEND

- Break point between utility systems

See Utility Plans for underground water line information

CONTRACT NO. 04-0120R4

CONTRACT CHANGE ORDER NO 128

SHEET 2 OF 8

M2 100 NPS and 300 NPS Water. Provide wet-tap and valve with roadway box per SFPUC standards for 300 NPS pipes. Provide wet tap and valve with roadway box per Caltrans standards for 100 NPS pipes.

See Vertical Riser Detail, Sheet M-4.

NOTES:

1. For Electrical, see E-sheets.
2. For Utilities, see U-sheets.
3. Contractor to avoid interference with construction of future bridge foundations.
4. Coordinate connection with SFPUC and Caltrans.
5. Tie in new pipe per Caltrans and SFPUC requirements. See sheet M-4 for Wet Tap Sleeve and Valve Detail.

ALL DIMENSIONS ARE IN MILLIMETERS UNLESS OTHERWISE SHOWN

HONG WONG, DESIGN OVERSIGHT	DESIGN	BY Ken Tella 07-08-09	CHECKED Jack Coad 07-08-09	PREPARED FOR THE STATE OF CALIFORNIA, DEPARTMENT OF TRANSPORTATION	Johnny Kuo, PROJECT ENGINEER
SIGN OFF DATE	DETAILS	BY Ken Tella 07-08-09	CHECKED Jack Coad 07-08-09		
	QUANTITIES	BY Ken Tella 07-08-09	CHECKED Jack Coad 07-08-09		

BRIDGE NO. 34-0006 | KILOMETER POST 12.6 | CU 04251 EA 0120R1

TEMPORARY BYPASS STRUCTURES
WATER PIPING PLAN NO.1
M-1R1

DISREGARD PRINTS BEARING EARLIER REVISION DATES → | REVISION DATES (PRELIMINARY STAGE ONLY) | SHEET | OF

DESIGN DETAIL SHEET (METRIC) (REV. 3/1/98)

ORIGINAL SCALE IN MILLIMETERS FOR REDUCED PLANS 0 10 20 30 40 50 60 70 80 90 100

FILE => $REQUEST

USERNAME => $USER | DATE PLOTTED => $DATE | TIME PLOTTED => $TIME

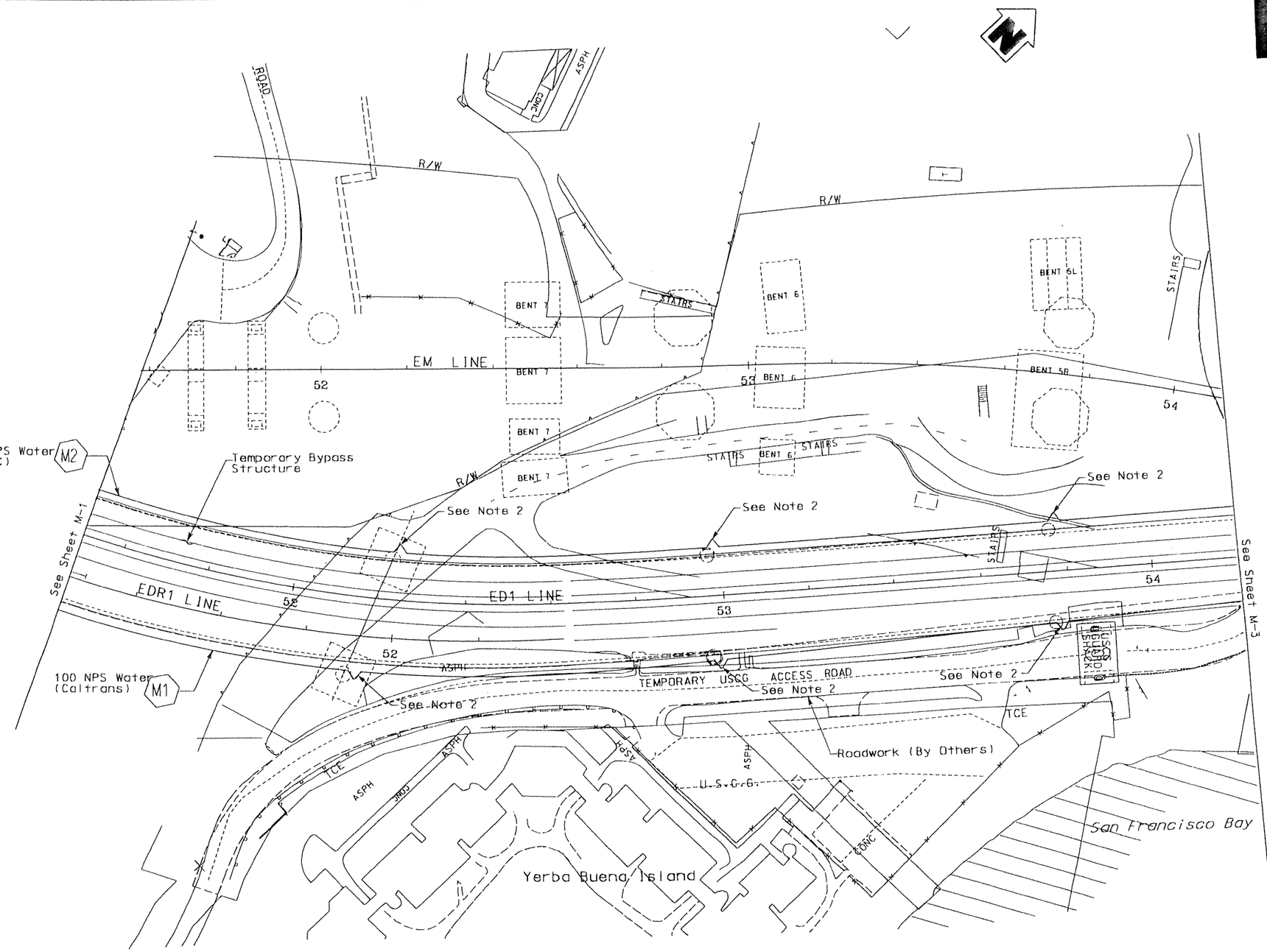

Caltrans Metric

DIST	COUNTY	ROUTE	KILOMETER POST TOTAL PROJECT	SHEET No	TOTAL SHEETS
04	~~Ala~~	80	12.6/13.2		

4-22-08
REGISTERED CIVIL ENGINEER

JOHN D. COAD JR. No. 22666-M Exp. 12-31-09 MECHANICAL STATE OF CALIFORNIA REGISTERED PROFESSIONAL ENGINEER

PLANS APPROVAL DATE

The State of California or its officers or agents shall not be responsible for the accuracy or completeness of electronic copies of this plan sheet.

PB Americas, Inc.
303 Second Street, Suite 700N
San Francisco, CA 94107

Caltrans now has a web site! To get to the web site, go to: http://www.dot.ca.gov

NOTES:

1. See M-1 Sheet for general notes.
2. Type 1 Hanger at Bents 49,50 and 51. Provide Flex Connector (See sheet M-4) across expansion joint typical.
3. Provide Type 1 hangers at even numbered columns and Type 2 hangers at odd numbered columns with Type 3 hangers at 5640 on center maximum spacing.

MARK	DATE	DESCRIPTIONS REVISIONS	BY	CH'D	CCO#
△					

CONTRACT CHANGE ORDER NO. 120
SHEET 3 OF 8

ALL DIMENSIONS ARE IN MILLIMETERS UNLESS OTHERWISE SHOWN

HONG WONG
DESIGN OVERSIGHT

SIGN OFF DATE

	BY	CHECKED
DESIGN	Ken Telle 04-16-08	Jack Coad 04-16-08
DETAILS	~~Ken~~ Ken Telle 04-16-08	~~Jack~~ Jack Coad 04-16-08
QUANTITIES	~~Ken~~ Ken Telle 04-16-08	~~Jack~~ Jack Coad 04-16-08

PREPARED FOR THE STATE OF CALIFORNIA
DEPARTMENT OF TRANSPORTATION

Johnny Kuo
PROJECT ENGINEER

CU 04251
EA 0120R1
FILE •) $REQUEST

BRIDGE NO. 34-0006
KILOMETER POST 12.6

DISREGARD PRINTS BEARING EARLIER REVISION DATES →

REVISION DATES (PRELIMINARY STAGE ONLY)

TEMPORARY BYPASS STRUCTURES
WATER PIPING PLAN NO.2

M-2R
SHEET OF

DESIGN DETAIL SHEET (METRIC) (REV. 3/1/98)

ORIGINAL SCALE IN MILLIMETERS FOR REDUCED PLANS 0 10 20 30 40 50 60 70 80 90 100

USERNAME •$USER DATE PLOTTED •)$DATE TIME PLOTTED •)$TIME

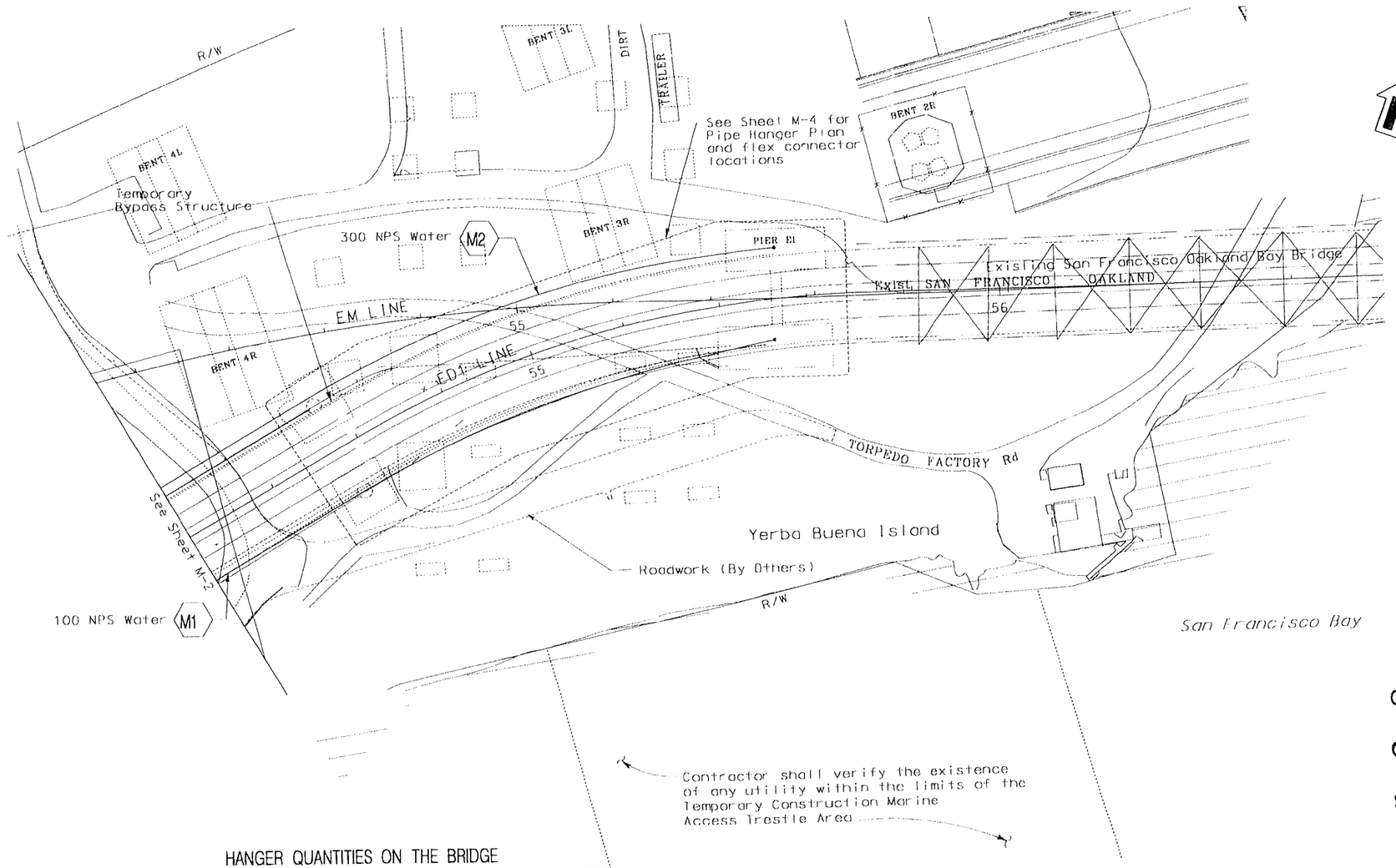

NOTES:

1. See Sheet M-7 for pipe hangers.
2. Tie in New Pipe per Caltrans and SFPUC requirements.
3. See Sheet M-7 for butterfly valve locations.

HANGER QUANTITIES ON THE BRIDGE

Type	Quantity (Ea)	
	100 mm	300 mm
Type 1 Anchor	20	19
Type 2 Roller Hanger	42	42
Type 3 Cleavis Hanger	40	40
Type 4 Riser Clamp	1	1
Flex Connectors	6	7
Expansion Bellows	20	19

WATER MAIN QUANTITIES ON THE BRIDGE

Sheet No.	Systom No.	Location	Caltrans 100 NPS M	US Navy 300 NPS M
M-1 to M-3	(M1) 100 NPS Water	ED1 51+44.2 18.4 Rt to 55+50.7 8.4 Rt	407	
M-1 to M-3	(M2) 300 NPS Water	ED1 51+45.6 12.2 Lt to 55+50.7 10.5 Lt		408
		TOTAL	407	408

ALL DIMENSIONS ARE IN MILLIMETERS UNLESS OTHERWISE SHOWN

Caltrans Metric

DIST	COUNTY	ROUTE	KILOMETER POST TOTAL PROJECT	SHEET No	TOTAL SHEETS
04	Ala	80	12.6/13.2		

07-08-09
REGISTERED CIVIL ENGINEER

REGISTERED PROFESSIONAL ENGINEER — JOHN D. COAD Jr. — No. 22566-M — Exp 12-31-09 MECHANICAL — STATE OF CALIFORNIA

PLANS APPROVAL DATE

The State of California or its officers or agents shall not be responsible for the accuracy or completeness of electronic copies of this plan sheet.

PB Americas, Inc
303 Second Street, Suite 700N
San Francisco, CA 94107

Caltrans now has a web site! To get to the web site, go to: http://www.dot.ca.gov

MARK	DATE	DESCRIPTIONS	BY	CH'D	CCO#
		REVISIONS			

CONTRACT CHANGE ORDER NO.
SHEET ____ OF ____

CONTRACT NO. 04-0120R4

CONTRACT CHANGE ORDER NO 128

SHEET 4 OF 8

HONG WONG
DESIGN OVERSIGHT

SIGN OFF DATE

	BY	CHECKED
DESIGN	Ken Tella 07-08-09	Jack Coad 07-08-09
DETAILS	Ken Tella 07-08-09	Jack Coad 07-08-09
QUANTITIES	Ken Tella 07-08-09	Jack Coad 07-08-09

PREPARED FOR THE STATE OF CALIFORNIA
DEPARTMENT OF TRANSPORTATION

Johnny Kuo
PROJECT ENGINEER

CU 04251
EA 0120L1

BRIDGE NO. 34-0006
KILOMETER POST 12.6

TEMPORARY BYPASS STRUCTURES
WATER PIPING PLAN NO.3

M-3R1

SHEET ____ OF ____

DISREGARD PRINTS BEARING EARLIER REVISION DATES

REVISION DATES (PRELIMINARY STAGE ONLY)

ORIGINAL SCALE IN MILLIMETERS FOR REDUCED PLANS 0 10 20 30 40 50 60 70 80 90 100

DESIGN DETAIL SHEET (METRIC) (REV. 3/1/98)

FILE =) $REQUEST

USERNAME =$USER DATE PLOTTED =) $DATE TIME PLOTTED =) $TIME

Caltrans Metric

DIST	COUNTY	ROUTE	KILOMETER POST/TOTAL PROJECT	SHEET No	TOTAL SHEETS
04	Ala	80	12.6/13.2		

07-08-09
REGISTERED MECH. ENGINEER
JOHN D. COAD Jr. No 22566-M Exp 12-31-09 MECHANICAL — REGISTERED PROFESSIONAL ENGINEER — STATE OF CALIFORNIA
PLANS APPROVAL DATE

The State of California or its officers or agents shall not be responsible for the accuracy or completeness of electronic copies of this plan sheet.

PB Americas, Inc
303 Second Street, Suite 700N
San Francisco, CA 94107

Caltrans now has a web site! To get to the web site, go to: http://www.dot.ca.gov

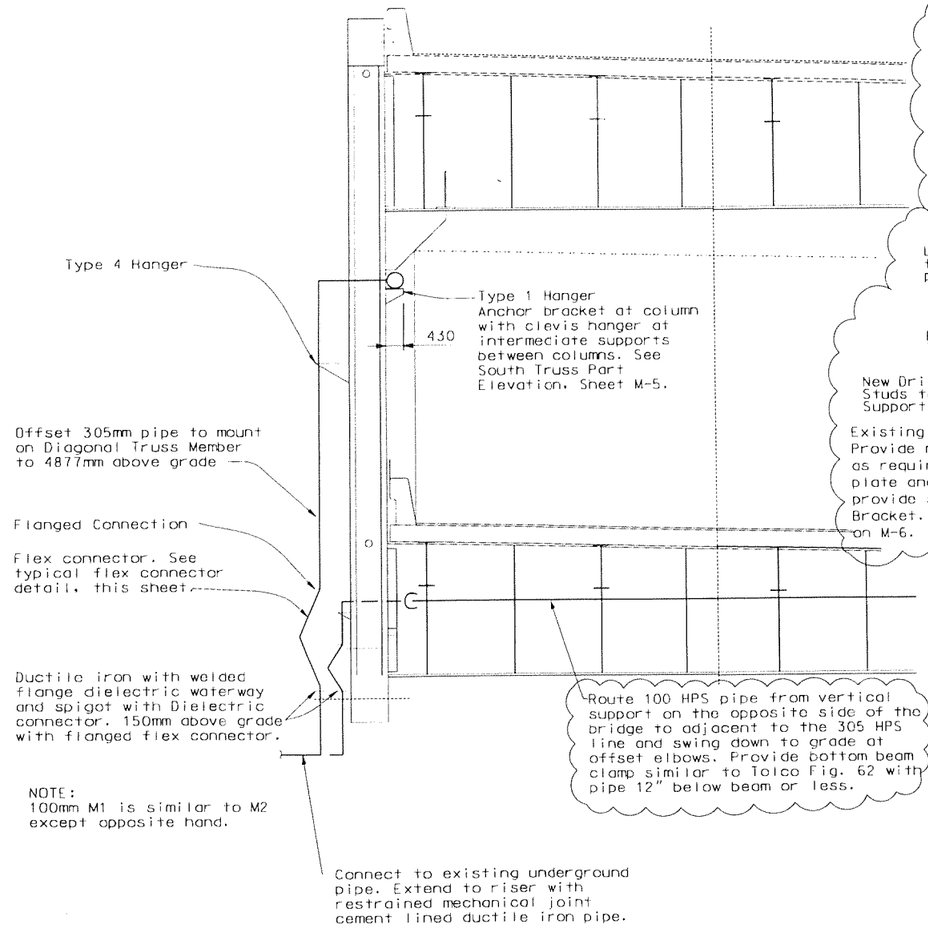

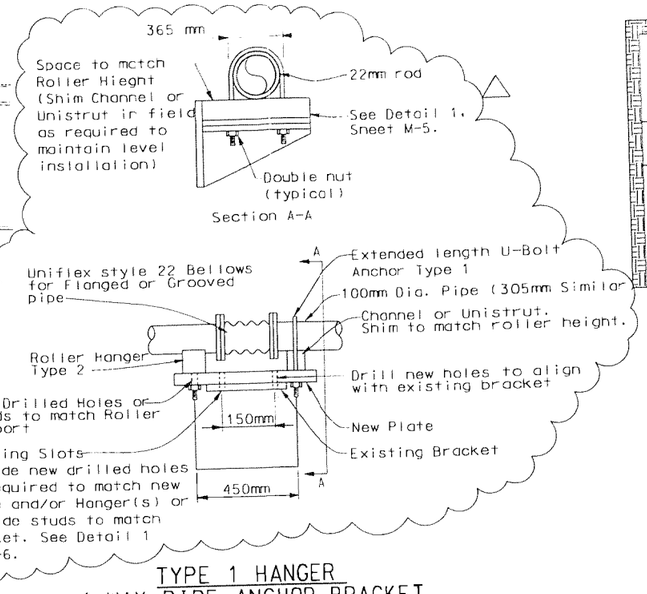

TYPE 1 HANGER
4 WAY PIPE ANCHOR BRACKET
NO SCALE

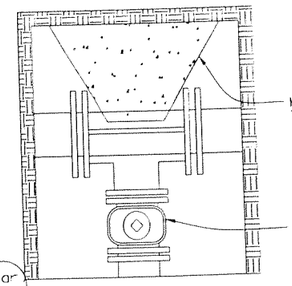

WET TAP SLEEVE AND VALVE
NO SCALE

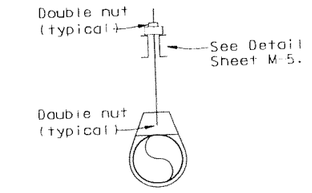

TYPE 3 HANGER
CLEVIS HANGER
NO SCALE

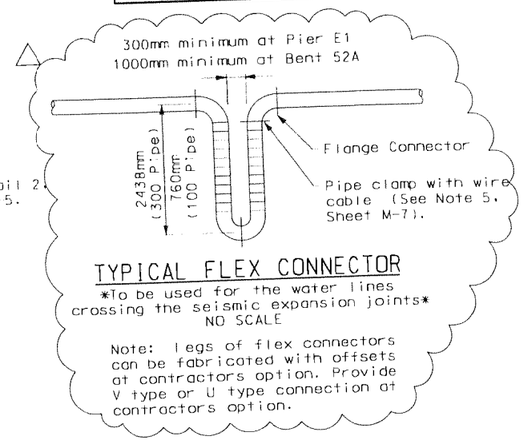

TYPICAL FLEX CONNECTOR
To be used for the water lines crossing the seismic expansion joints
NO SCALE

Note: legs of flex connectors can be fabricated with offsets at contractors option. Provide V type or U type connection at contractors option.

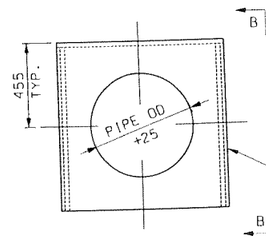

TYPE 4 HANGER DETAIL
NO SCALE

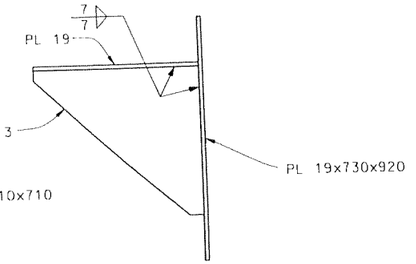

SECTION B-B
NO SCALE

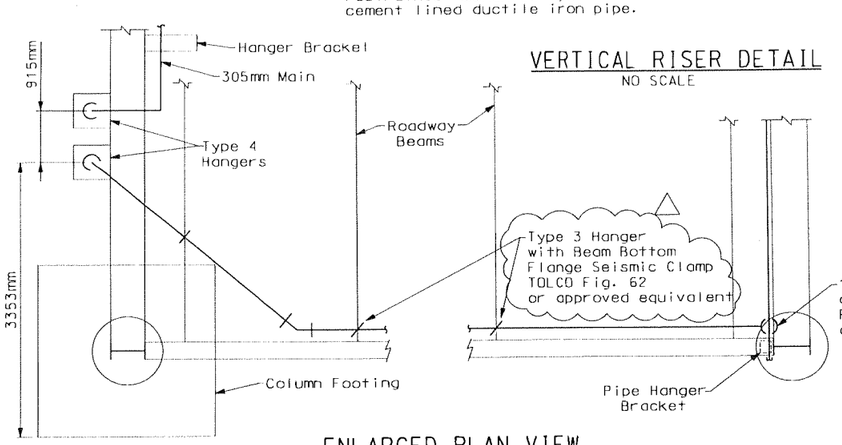

VERTICAL RISER DETAIL
NO SCALE

ENLARGED PLAN VIEW
WEST END TIE-IN
NO SCALE

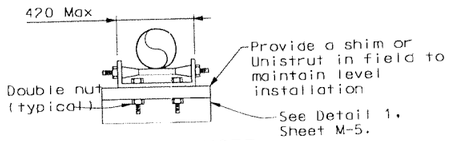

TYPE 2 HANGER
ROLLER HANGER BRACKET
NO SCALE

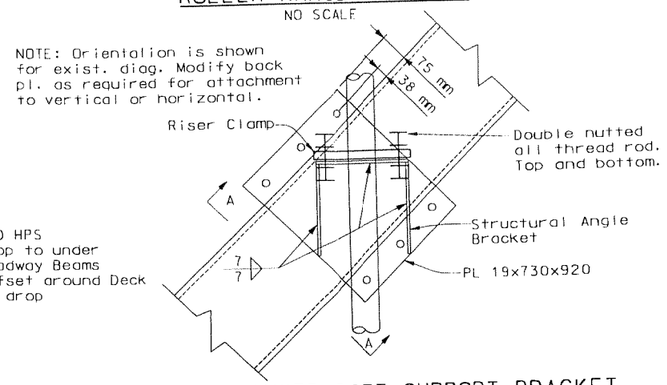

TYPE 4 HANGER PIPE SUPPORT BRACKET
RISER CLAMP ELEVATION
NO SCALE

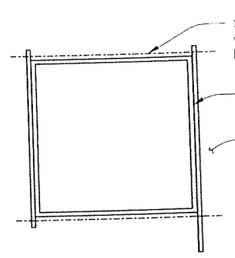

SECTION A-A
NO SCALE

MARK	DATE	DESCRIPTIONS	BY	CH'D	CCO#
		REVISIONS			

CONTRACT CHANGE ORDER NO. 128
SHEET 5 OF 8

ALL DIMENSIONS ARE IN MILLIMETERS UNLESS OTHERWISE SHOWN

HONG WONG
DESIGN OVERSIGHT

SIGN OFF DATE

DESIGN DETAIL SHEET (METRIC) (REV. 3/1/98)

	BY	CHECKED
DESIGN	Ken Tella 07-08-09	Jack Coad 07-08-09
DETAILS	Ken Tella 07-08-09	Jack Coad 07-08-09
QUANTITIES	Ken Tella 07-08-09	Jack Coad 07-08-09

PREPARED FOR THE STATE OF CALIFORNIA DEPARTMENT OF TRANSPORTATION

ORIGINAL SCALE IN MILLIMETERS FOR REDUCED PLANS 0 10 20 30 40 50 60 70 80 90 100

Johnny Kuo
PROJECT ENGINEER

CU 04251
EA 0120R1

BRIDGE NO.	TEMPORARY BYPASS STRUCTURES	
34-0006	WATER PIPING DETAILS	M-4R1
KILOMETER POST 12.6		SHEET OF

DISREGARD PRINTS BEARING EARLIER REVISION DATES →
REVISION DATES (PRELIMINARY STAGE ONLY)

FILE •) $REQUEST
DATE PLOTTED •) $DATE
TIME PLOTTED •) $TIME
USERNAME •)USER

MARK	DATE	DESCRIPTIONS	BY	CH'D	CCO#
△					

REVISIONS

CONTRACT CHANGE ORDER NO. 128
SHEET 6 OF 8

NOTES:

1. Type 3 100 NPS Water line support located at each Vertical Truss member.
2. Type 4 100 NPS Water line support located 1/3 points span locations (between vertical Truss Member supports).
3. All Bolts shall be 19 mm ø HS Bolts, ASTM A325, U.N.O.
4. This sheet shows structural support at the 100 NPS water line. For brackets, threaded rods and other support hardware of the water line see sheet no. M-4.
5. Lateral location of Water Line to be determined by others.

ALL DIMENSIONS ARE IN MILLIMETERS UNLESS OTHERWISE SHOWN

DIST	COUNTY	ROUTE	KILOMETER POST TOTAL PROJECT	SHEET No	TOTAL SHEETS
04	Ala	80	12.6/13.2		

Caltrans Metric

Gregory Benkovich
REGISTERED CIVIL ENGINEER

02/27/2008
PLANS APPROVAL DATE

REGISTERED PROFESSIONAL ENGINEER — Gregory Benkovich — No. C40518 — Exp. 3/31/09 — CIVIL — STATE OF CALIFORNIA

The State of California or its officers or agents shall not be responsible for the accuracy or completeness of electronic copies of this plan sheet.

PB Americas, Inc.
303 Second Street, Suite 700N
San Francisco, CA 94107

Caltrans now has a web site! To get to the web site, go to: http://www.dot.ca.gov

HONG WONG
DESIGN OVERSIGHT

SIGN OFF DATE

DESIGN DETAIL SHEET (METRIC) (REV. 3/1/98)

	BY	CHECKED
DESIGN	G. Benkovich	B. Nadell
DETAILS	O. Kurnovskaya	G. Benkovich
QUANTITIES	G. Benkovich	B. Nadell

PREPARED FOR THE STATE OF CALIFORNIA DEPARTMENT OF TRANSPORTATION

Johnny Kuo
PROJECT ENGINEER

ORIGINAL SCALE IN MILLIMETERS FOR REDUCED PLANS 0 10 20 30 40 50 60 70 80 90 100

CU 04251
EA 0120L1

BRIDGE NO. 34-0006
KILOMETER POST 12.6

TEMPORARY BYPASS STRUCTURES
WATER PIPING DETAILS NO. 2

M-5R

SHEET OF

REVISION DATES (PRELIMINARY STAGE ONLY)
DISREGARD PRINTS BEARING EARLIER REVISION DATES → 6/24/2009

FILE => T:\13103\SouthDetour\CCO ET1-1\struc\pipe support\13103as05.dgn

USERNAME => ricofrent DATE PLOTTED => 6/23/2009 TIME PLOTTED => 12:57:00 PM

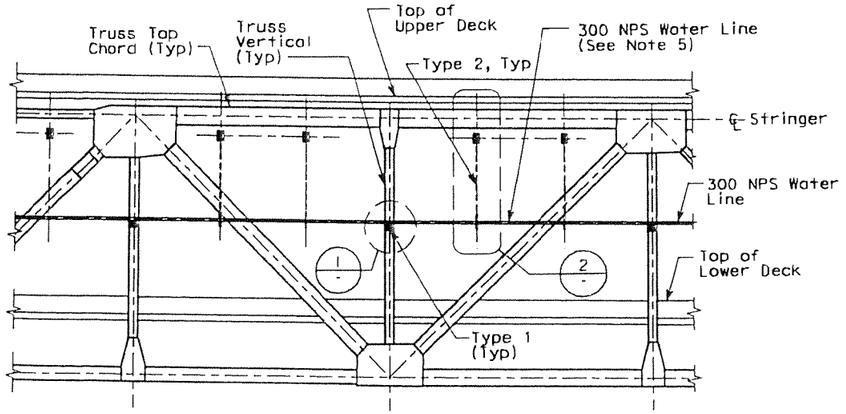

NORTH TRUSS PART ELEVATION

1:125

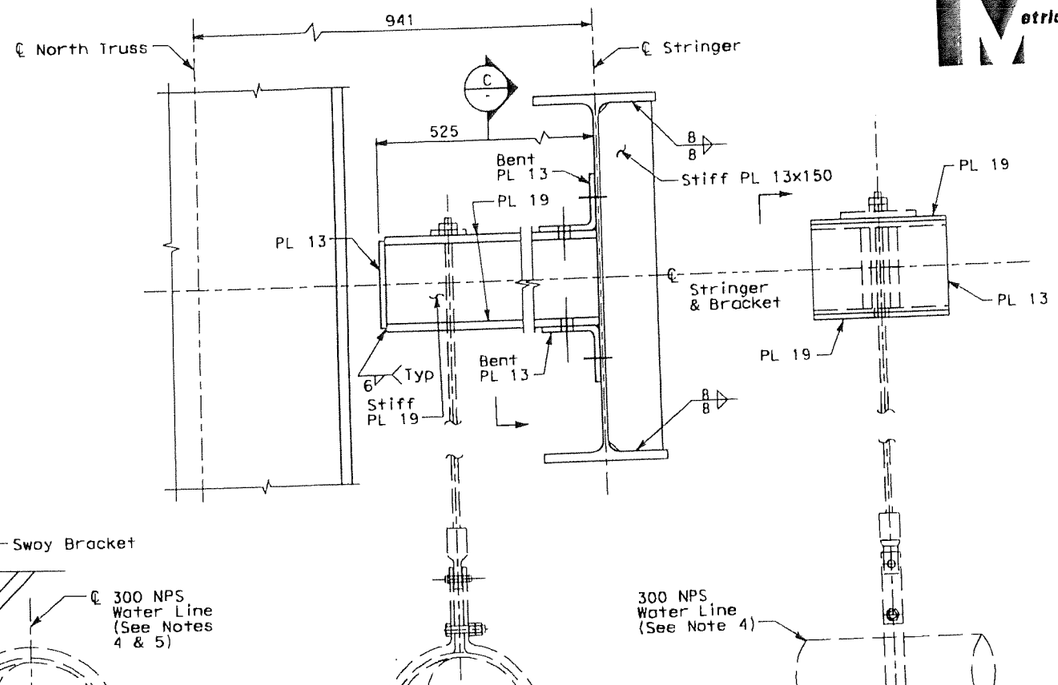

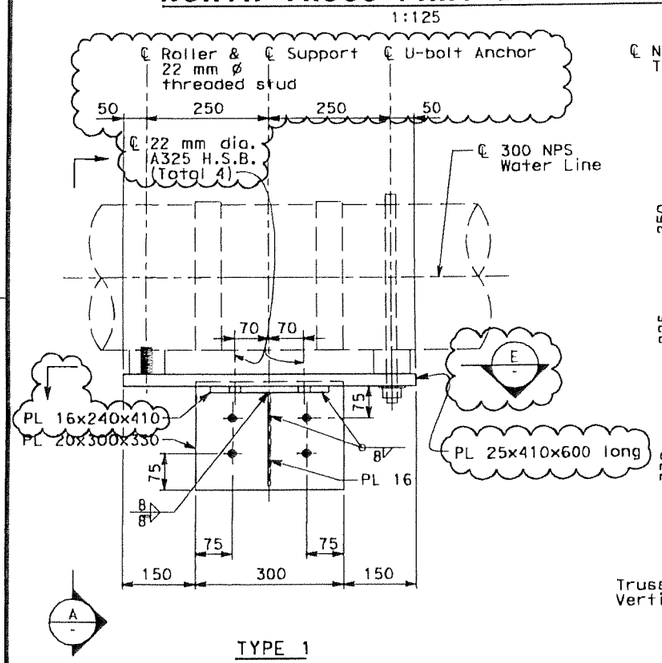

TYPE 1
(See note 1)

1 DETAIL
1:5

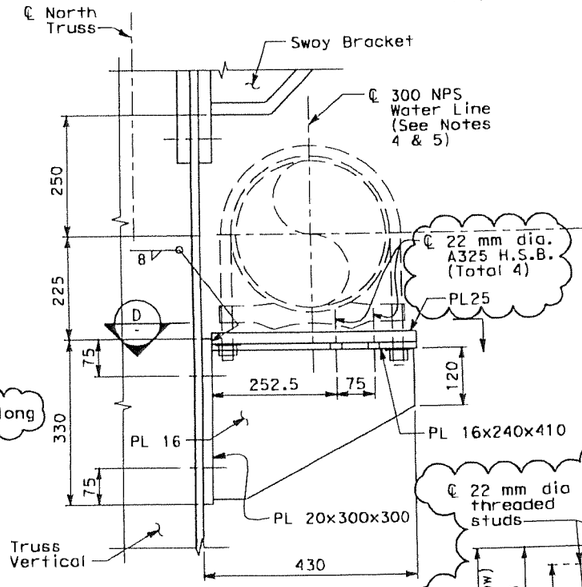

A SECTION
1:5

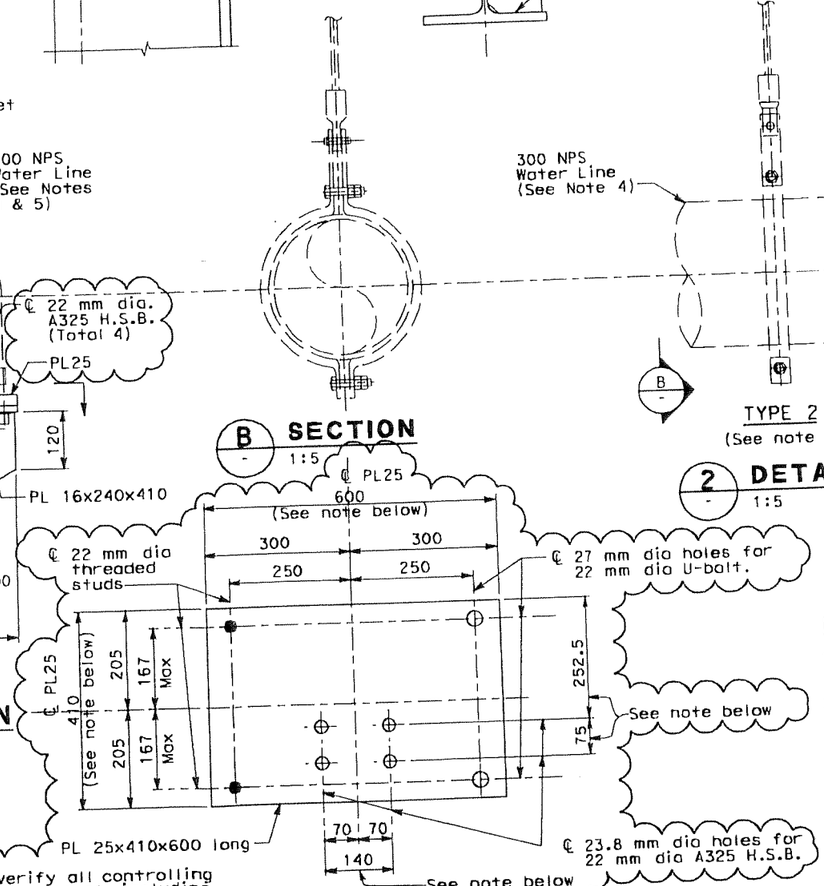

Note:
The Contractor shall verify all controlling dimensions of the exist bracket, including location and size of the slotted holes, before ordering or fabricating PL 25x410x600 long

E SECTION
1:5

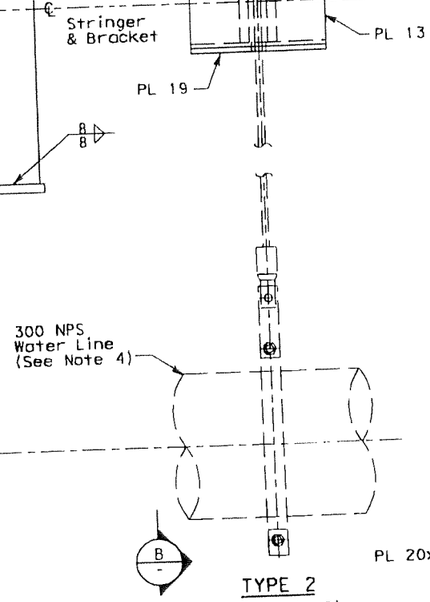

TYPE 2
(See note 2)

B SECTION
1:5

2 DETAIL
1:5

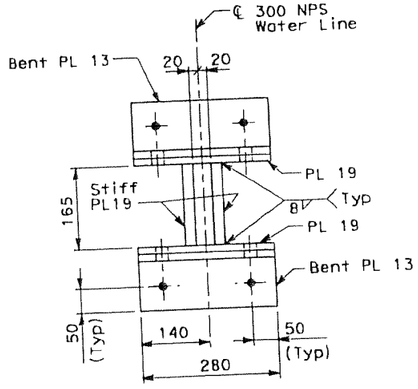

C SECTION
1:5

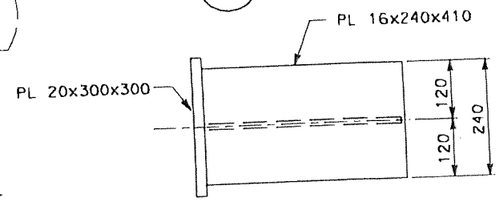

D SECTION
1:5

NOTES:

1. Type 1 300 NPS Water line support located at each Vertical Truss member.
2. Type 2 300 NPS Water line support located 1/3 points span locations (between vertical Truss Member supports).
3. All Bolts shall be 19 mm ø HS Bolts, ASTM A325, U.N.O.
4. This sheet shows structural support at the 300 NPS water line. For brackets, threaded rods and other support hardware of the water line see sheet no. M-4.
5. Lateral location of Water Line to be determined by others.

ALL DIMENSIONS ARE IN MILLIMETERS UNLESS OTHERWISE SHOWN

MARK	DATE	DESCRIPTIONS	BY	CH'D	CCO#
		REVISIONS			

CONTRACT CHANGE ORDER NO. 128
SHEET 7 OF 8

DIST	COUNTY	ROUTE	KILOMETER POST TOTAL PROJECT	SHEET No	TOTAL SHEETS
04	Ala	80	12.6/13.2		

Gregory Benkovich
REGISTERED CIVIL ENGINEER

02/27/2008
PLANS APPROVAL DATE

REGISTERED PROFESSIONAL ENGINEER — Gregory Benkovich — No. C40518 — Exp. 3/31/09 — CIVIL — STATE OF CALIFORNIA

The State of California or its officers or agents shall not be responsible for the accuracy or completeness of electronic copies of this plan sheet.

PB Americas, Inc.
303 Second Street, Suite 700N
San Francisco, CA 94107

Caltrans now has a web site! To get to the web site, go to: http://www.dot.ca.gov

HONG WONG		DESIGN	G. Benkovich	B. Nadell	PREPARED FOR THE STATE OF CALIFORNIA DEPARTMENT OF TRANSPORTATION
DESIGN OVERSIGHT		DETAILS	O. Kurnovskaya	G. Benkovich	Johnny Kuo, PROJECT ENGINEER
SIGN OFF DATE		QUANTITIES	G. Benkovich	B. Nadell	CU 04251, EA 0120L1

BRIDGE NO. 34-0006
KILOMETER POST 12.6

TEMPORARY BYPASS STRUCTURES
WATER PIPING DETAILS NO. 3

M-6R

DISREGARD PRINTS BEARING EARLIER REVISION DATES → REVISION DATES (PRELIMINARY STAGE ONLY) 6/24/2009

DESIGN DETAIL SHEET (METRIC) REV. 3/1/98

ORIGINAL SCALE IN MILLIMETERS FOR REDUCED PLANS 0 10 20 30 40 50 60 70 80 90 100

FILE => I:\13103\SouthDetour\CCO ETI-1\struc\pipe support\13103s06.dgn

USERNAME => jricafrent DATE PLOTTED => 6/23/2009 TIME PLOTTED => 12:43:13 PM

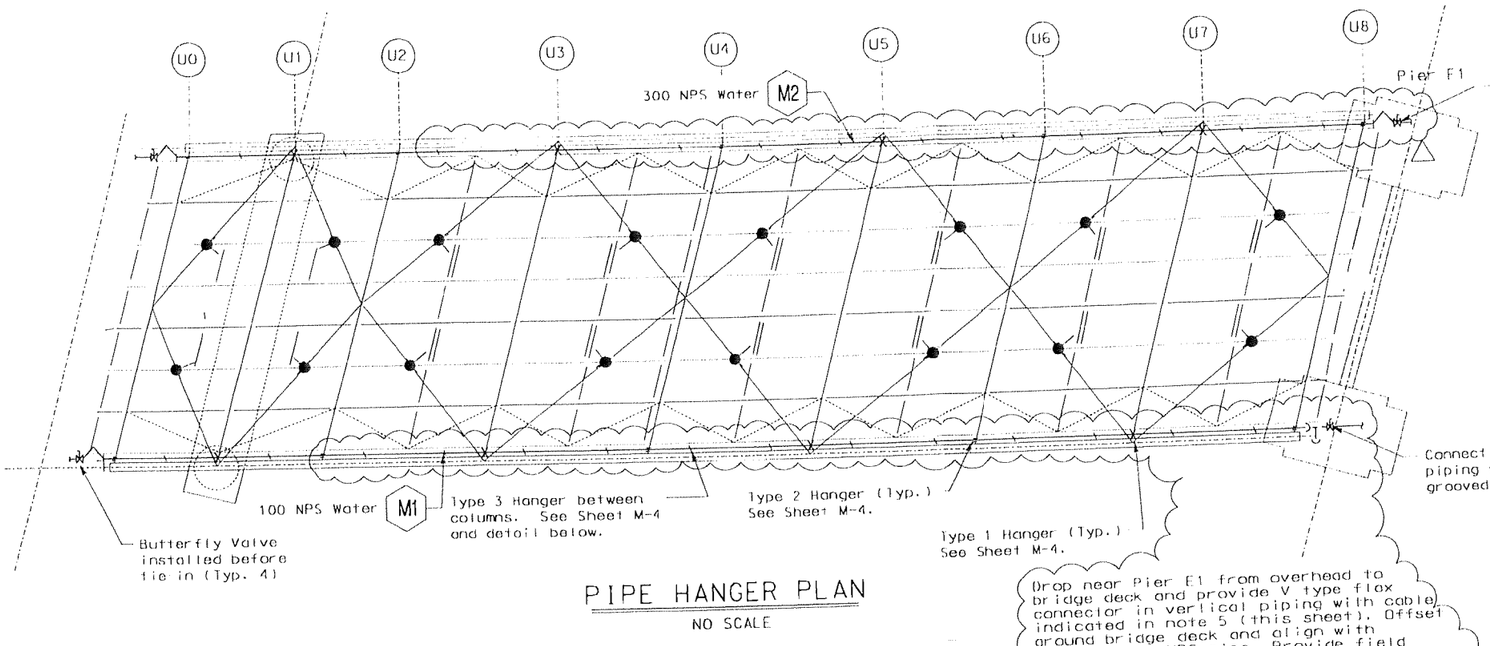

PIPE HANGER PLAN

NO SCALE

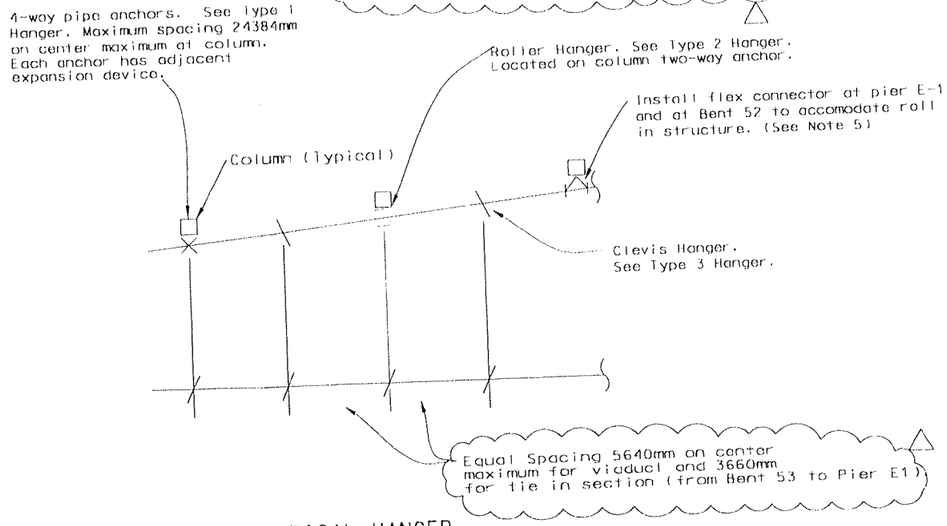

TYPICAL HANGER GENERAL ARRANGEMENT

NO SCALE

NOTES:

1. Use Type 1 Hanger anchors at columns U1, U3, U5 AND U7.

2. Use type 2 Hanger rollers at columns U0, U2, U4, U6 and U8.

3. Use Type 3 Clevis Hanger on intermediate hangers at mid points (5640 max.) per bay.

4. Install Butterfly valves at pier E-1 and at column U0 in Phase 1 prior to cutting existing bridge connection. Install flex connection piping on this sheet in tie in structure prior to Roll-in Phase.

5. Where additional space is required for flex connector to offset for alignment, the roller hangers at columns U0 and U8 may be omitted. Provide a 12mm cable with between 50mm and 300mm slack in cable. Connect the top end of the cable to a double nutted (3/4") eye bolt with oversize washer in the 25x400 slot on the existing hanger bracket, and connect the other end to a pipe clamp. Both cable ends receive a drop forged yoke end wire rope socket with clevis pin to attach rope to pipe clamp at flanged end of flex connector and to eye bolt.

6. Demolish existing 100 NPS and 300 NPS up to flanged pipe connection. Leave flange for new piping connection.

DIST	COUNTY	ROUTE	KILOMETER POST/TOTAL PROJECT	SHEET No	TOTAL SHEETS
04	Ala	80	12.6/13.2		

REGISTERED MECH. ENGINEER 07-08-09

PLANS APPROVAL DATE

JOHN D. COAD Jr. No. 22566-M Exp. 12-31-09 MECHANICAL — REGISTERED PROFESSIONAL ENGINEER — STATE OF CALIFORNIA

The State of California or its officers or agents shall not be responsible for the accuracy or completeness of electronic copies of this plan sheet

PB Americas, Inc.
303 Second Street, Suite 700N
San Francisco, CA 94107

Caltrans now has a web site! To get to the web site, go to: http://www.dot.ca.gov

MARK	DATE	DESCRIPTIONS	BY	CH'D	CCO#
		REVISIONS			

CONTRACT CHANGE ORDER NO. 128
SHEET 8 OF 8

ALL DIMENSIONS ARE IN MILLIMETERS UNLESS OTHERWISE SHOWN

DESIGN	BY Ken Tella 07-08-09	CHECKED Jack Coad 07-08-09	PREPARED FOR THE STATE OF CALIFORNIA DEPARTMENT OF TRANSPORTATION
DETAILS	BY Ken Tella 07-08-09	CHECKED Jack Coad 07-08-09	
QUANTITIES	BY Ken Tella 07-08-09	CHECKED Jack Coad 07-08-09	

HONG WONG
DESIGN OVERSIGHT

SIGN OFF DATE

DESIGN DETAIL SHEET (METRIC) (REV. 3/1/98)

ORIGINAL SCALE IN MILLIMETERS FOR REDUCED PLANS 0 10 20 30 40 50 60 70 80 90 100

Johnny Kuo
PROJECT ENGINEER

CU 04251
EA 0120R1

FILE -) $REQUEST

BRIDGE NO.	TEMPORARY BYPASS STRUCTURES	
34-0006	WATER PIPING PLAN NO.4	M-7R1
KILOMETER POST 12.6		SHEET OF

DISREGARD PRINTS BEARING EARLIER REVISION DATES

REVISION DATES (PRELIMINARY STAGE ONLY)

USERNAME -$USER
DATE PLOTTED -$DATE
TIME PLOTTED -$TIME

STATE OF CALIFORNIA - DEPARTMENT OF TRANSPORTATION

CONTRACT CHANGE ORDER MEMORANDUM

DATE: 8/3/2009 Page 1 of 2

TO: MIKE FORNER / DEANNA VILCHECK	FILE: E.A. 04 - 0120R4
	CO-RTE-PM SF-80-12.6/13.2
FROM: BILL CASEY	FED. NO. ACBRIM-080-1(097)N
CCO#: **128** SUPPLEMENT#: **0** Category Code: **CHPX**	CONTINGENCY BALANCE (incl. this change) **$17,668,667.59**
COST: **$888,538.43** INCREASE ☑ DECREASE ☐	HEADQUARTERS APPROVAL REQUIRED? ☑ YES ☐ NO
SUPPLEMENTAL FUNDS PROVIDED: **$0.00**	IS THIS REQUEST IN ACCORDANCE WITH ENVIRONMENTAL DOCUMENTS? ☑ YES ☐ NO
CCO DESCRIPTION: YBID Water Line	**PROJECT DESCRIPTION:** CONSTRUCT ROUTE 80 TEMP BYPASS STRUCTURE

Original Contract Time:	Time Adj. This Change:	Previously Approved CCO Time Adjustments:	Percentage Time Adjusted: (including this change)	Total # of Unreconciled Deferred Time CCO(s): (including this change)
475 Day(s)	**0** Day(s)	**1195** Day(s)	**252** %	**7**

THIS CHANGE ORDER PROVIDES FOR:

Furnishing and installing 12 NPS and 4 NPS water line on the Yerba Buena Island Detour (YBID) structure.

The YBID was awarded in March 2004 to construct a detour that will allow for the tie in of the new east span of the San Francisco Oakland Bay Bridge to Yerba Buena Island. The YBID encompasses three main structures, the East Tie-In to the existing bridge, the West Tie-In (WTI) to Yerba Buena Island, and the Viaduct structure between the two tie ins.

Two separate Department strategy memorandums, dated December 14, 2006 and December 25, 2006, approved by Tony Anziano - Toll Bridge Program Manager and Richard Land - Chief Engineer, recommended that the Department assume responsibility for the designs of the East Tie-In (ETI) and West Tie-In (WTI) portions of this contract, and incorporated seismic retrofit work of the permanent Yerba Buena Island Transition Structure (YBITS) onto this project. The approval of these strategy memorandums extended the project completion date approximately 5 years.

Based on the approved strategy memorandums, the Department assumed responsibility for the water line design and issued revised water line plans for the YBID. Consequently, the original scope of work has been changed and this change order provides for the elimination of Contract Bid Item No. 81, 12 NPS Water Main (Temporary Bypass Structure) and Item No. 82, 4 NPS Water Line (Temporary Bypass Structure), as this work is no longer representative of the work as originally bid .

Additionally, due to the extent of the water line changes and the 5 year delay that has been incurred on the project, the original contract bid items shall be eliminated and an agreed lump sum price shall be paid for the work.

Contract Bid Item Nos. 81 and 82, for a total amount of $598,600.00 will be deleted from the contract. The Contractor will be compensated for the Department's revised water line work at an agreed lump sum of $1,487,138.43. The net cost of $888,538.43 shall be financed from the projects contingency funds. A cost analysis is on file in the project records.

No adjustment of contract time is warranted, as the work will not affect the controlling operation.

This change was concurred with by Alec Melkonians - Asst. Project Manager, Hong Wong - Project Engineer, Lina Ellis - Maintenance.

Maintenance concurrence is not required, as the water line work doesn't affect any permanent roadway features.

ADA Notice: For individuals with sensory disabilities, this document is available in alternate formats. For information call: (916) 654-6410 or TDD (916) 654-3880 or write Records and Forms Management, 1120 N Street, MS-89, Sacramento, CA 95814.

RECEIVED
011094 OCT -8 09

CONCURRED BY:			
Construction Engineer:	Jeannie Balderramos JB	Date	8/14/09
Bridge Engineer:		Date	
Project Engineer:	Hong Wong, PE	Date	8/18/09
Project Manager:	Alec Melkonians	Date	8/4/09
FHWA Rep.:		Date	
Environmental:		Date	
Other (specify):	Lina Ellis, Maintenance	Date	
Other (specify):		Date	
District Prior Approval By:		Date	
HQ (Issue Approve) By:	Bob Molera, HQ CCO Engineer	Date	8/18/09
Resident Engineer's Signature:		Date	
			8-13-09

ESTIMATE OF COST

	THIS REQUEST	TOTAL TO DATE
ITEMS	($598,600.00)	($598,600.00)
FORCE ACCOUNT	$0.00	$0.00
AGREED PRICE	$1,487,138.43	$1,487,138.43
ADJUSTMENT	$0.00	$0.00
TOTAL	$888,538.43	$888,538.43

FEDERAL PARTICIPATION

☐ PARTICIPATING ☐ PARTICIPATING IN PART ☑ NONE
☐ NON-PARTICIPATING (MAINTENANCE) ☐ NON-PARTICIPATING

FEDERAL SEGREGATION (if more than one Funding Source or P.I.P. type)
☐ CCO FUNDED PER CONTRACT ☐ CCO FUNDED AS FOLLOWS

FEDERAL FUNDING SOURCE	PERCENT

ADA Notice: For individuals with sensory disabilities, this document is available in alternate formats. For information call: (916) 654-6410 or TDD (916) 654-3880 or write Records and Forms Management, 1120 N Street, MS-89, Sacramento, CA 95814.

CONTRACT CHANGE ORDER

Change Requested by: Engineer

CCO 128	Suppl. No. 1	Contract No. 04 - 0120R4	Road SF-80-12.6/13.2	FED. AID LOC.:

To: **CC MYERS INC**

You are directed to make the following changes from the plans and specifications or do the following described work not included in the plans and specifications for this contract. ***NOTE: This change order is not effective until approved by the Engineer.***

Description of work to be done, estimate of quantities and prices to be paid. (Segregate between additional work at contract price, agreed price and force account.) Unless otherwise stated, rates for rental of equipment cover only such time as equipment is actually used and no allowance will be made for idle time. This last percentage shown is the net accumulated increase or decrease from the original quantity in the Engineer's Estimate.

Provide for the following changes to the 12 NPS and 4 NPS water lines of the Temporary Bypass Structure (Bridge No. 34-0006 (TEMP)):

1) Modify the 12 NPS and 4 NPS water lines as shown on Pages No. 2 through 7 of this change order.

2) Install a fire valve and flushing connection to the 12 NPS water line as shown on Sheet No. 8 of this change order.

Adjustment of Compensation at Lump Sum:

Provide compensation to the Contractor for all additional costs incurred due to the changes to the 12 NPS and 4 NPS waterlines provided for under this change order. For these costs, the Contractor shall be compensated a lump sum of $242,380.00. This sum constitutes full and final compensation, including all markups, for all outstanding costs associated with the work of this change.

Total Cost of Adjustment of Compensation at Lump Sum $242,380.00

Estimated Cost: **Increase** ☑ **Decrease** ☐ **$242,380.00**

By reason of this order the time of completion will be adjusted as follows: 0 days

Submitted by

Signature	Resident Engineer	Date
	BILL CASEY	1-7-10

Approval Recommended by

Signature	SFOBB Construction Manager	Date
Michael F. Forner	MIKE FORNER	1-12-2010

Engineer Approval by

Signature	SFOBB Construction Manager	Date
Michael F. Forner	MIKE FORNER	1-20-2010

We the undersigned contractor, have given careful consideration to the change proposed and agree, if this proposal is approved, that we will provide all equipment, furnish the materials, except as may otherwise be noted above, and perform all services necessary for the work above specified, and will accept as full payment therefor the prices shown above.

NOTE: If you, the contractor, do not sign acceptance of this order, your attention is directed to the requirements of the specifications as to proceeding with the ordered work and filing a written protest within the time therein specified.

Contractor Acceptance by

Signature	(Print name and title)	Date
D. E. Hamick	DANIEL E. HAMICK, PRESIDENT	1/18/10

DIST	COUNTY	ROUTE	KILOMETER POST TOTAL PROJECT	SHEET No	TOTAL SHEETS
04	Ala	80	12.6/~~13.2~~		

4-22-08
REGISTERED CIVIL ENGINEER

JOHN D. COAD Jr. No. 22566-M Exp. 12-31-09 MECHANICAL — REGISTERED PROFESSIONAL ENGINEER — STATE OF CALIFORNIA

PLANS APPROVAL DATE

The State of California or its officers or agents shall not be responsible for the accuracy or completeness of electronic copies of this plan sheet.

PB Americas, Inc.
303 Second Street, Suite 700N
San Francisco, CA 94107

Caltrans now has a web site! To get to the web site, go to: http://www.dot.ca.gov

NOTES:

1. See M-1 Sheet for general notes.
2. Type 1 Hanger at Bents 49,50 and 51. Provide Flex Connector (See sheet M-4) across expansion joint typical.
3. Provide Type 1 hangers at even numbered columns and Type 2 hangers at odd numbered columns with Type 3 hangers at 5640 on center maximum spacing.

MARK	DATE	DESCRIPTIONS	BY	CH'D	CCO#
		REVISIONS			

CONTRACT CHANGE ORDER NO. 12851
SHEET 2 OF 8

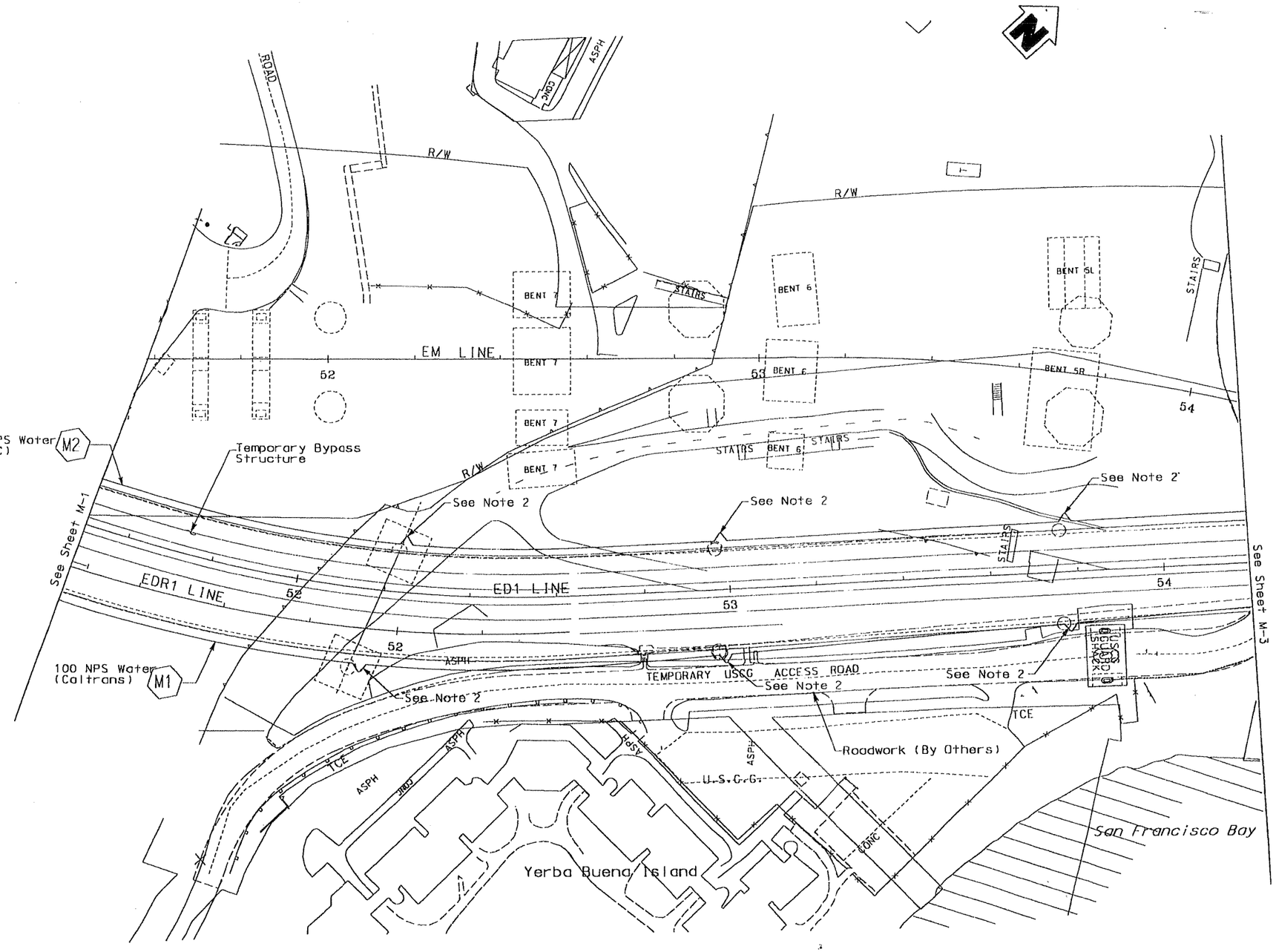

ALL DIMENSIONS ARE IN MILLIMETERS UNLESS OTHERWISE SHOWN

HONG WONG, DESIGN OVERSIGHT		DESIGN	BY Ken Tella 04-16-08	CHECKED Jack Coad 04-16-08	PREPARED FOR THE STATE OF CALIFORNIA, DEPARTMENT OF TRANSPORTATION
SIGN OFF DATE		DETAILS	BY Ken Tella 04-16-08	CHECKED Jack Coad 04-16-08	
DESIGN DETAIL SHEET (METRIC) (REV. 3/1/98)		QUANTITIES	BY Ken Tella 04-16-08	CHECKED Jack Coad 04-16-08	

Johnny Kuo, PROJECT ENGINEER

BRIDGE NO.	TEMPORARY BYPASS STRUCTURES
34-0006	
KILOMETER POST 12.6	WATER PIPING PLAN NO.2

M-2R

CU 04251
EA 0120R1

DISREGARD PRINTS BEARING EARLIER REVISION DATES → 6/24/2009

ORIGINAL SCALE IN MILLIMETERS FOR REDUCED PLANS 0 10 20 30 40 50 60 70 80 90 100

FILE •) $REQUEST

USERNAME •)USER DATE PLOTTED •)$DATE TIME PLOTTED •)$TIME

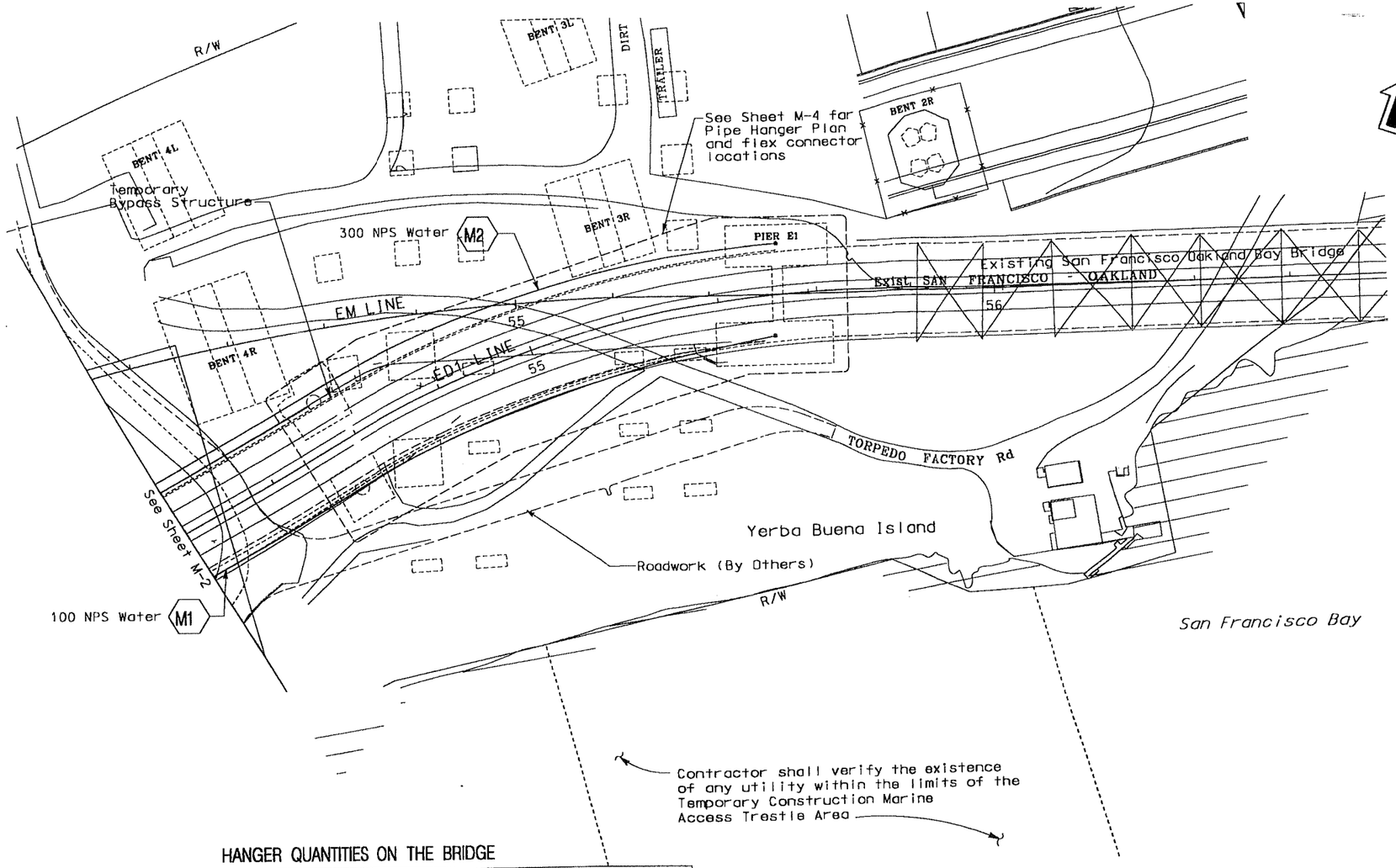

DIST	COUNTY	ROUTE	KILOMETER POST TOTAL PROJECT	SHEET No	TOTAL SHEETS
04	Alm	80	12.6/13.2		

07-08-09
REGISTERED MECH. ENGINEER

REGISTERED PROFESSIONAL ENGINEER
JOHN D. COAD JR
No. 22566-M
Exp. 12-31-09
MECHANICAL
STATE OF CALIFORNIA

PLANS APPROVAL DATE

The State of California or its officers or agents shall not be responsible for the accuracy or completeness of electronic copies of this plan sheet.

PB Americas, Inc.
303 Second Street, Suite 700N
San Francisco, CA 94107

Caltrans now has a web site! To get to the web site, go to: http://www.dot.ca.gov

NOTES:

1. See Sheet M-7 for pipe hangers.
2. Tie in New Pipe per Caltrans and SFPUC requirements.
3. See Sheet M-7 for butterfly valve locations.

MARK	DATE	DESCRIPTIONS REVISIONS	BY	CH'D	CCO#
△					

CONTRACT CHANGE ORDER NO. 12851
SHEET 3 OF 8

HANGER QUANTITIES ON THE BRIDGE

Type	Quantity (Ea)	
	100 mm	300 mm
Type 1 Anchor	20	19
Type 2 Roller Hanger	42	42
Type 3 Cleavis Hanger	40	40
Type 4 Riser Clamp	1	1
Flex Connectors	6	7

WATER MAIN QUANTITIES ON THE BRIDGE

Sheet No.	System No.	Location	Caltrans 100 NPS M	US Navy 300 NPS M
M-1 to M-3	(M1) 100 NPS Water	ED1 51+44.2 18.4 Rt to 55+50.7 8.4 Rt	407	
M-1 to M-3	(M2) 300 NPS Water	ED1 51+45.6 12.2 Lt to 55+50.7 10.5 Lt		408
		TOTAL	407	408

ALL DIMENSIONS ARE IN MILLIMETERS UNLESS OTHERWISE SHOWN

HONG WONG
DESIGN OVERSIGHT

SIGN OFF DATE

DESIGN DETAIL SHEET (METRIC) (REV. 3/1/98)

	BY	CHECKED
DESIGN	Ken Tella 07-08-09	Jack Coad 07-08-09
DETAILS	Ken Tella 07-08-09	Jack Coad 07-08-09
QUANTITIES	Ken Tella 07-08-09	Jack Coad 07-08-09

ORIGINAL SCALE IN MILLIMETERS FOR REDUCED PLANS 0 10 20 30 40 50 60 70 80 90 100

PREPARED FOR THE STATE OF CALIFORNIA DEPARTMENT OF TRANSPORTATION

Johnny Kuo
PROJECT ENGINEER

CU 04251
EA 0120L1

BRIDGE NO. 34-0006
KILOMETER POST 12.6

DISREGARD PRINTS BEARING EARLIER REVISION DATES →
REVISION DATES (PRELIMINARY STAGE ONLY)

TEMPORARY BYPASS STRUCTURES
WATER PIPING PLAN NO.3

M-3R2
SHEET OF

FILE •) T:\13633A-OaklandBayBridgeSubstation\Task 0 - SSD Civil\Microstation\Drawings\13103as03.dgn

USERNAME •)hendry DATE PLOTTED •) 11/17/2009 TIME PLOTTED •) 11:42:06 AM

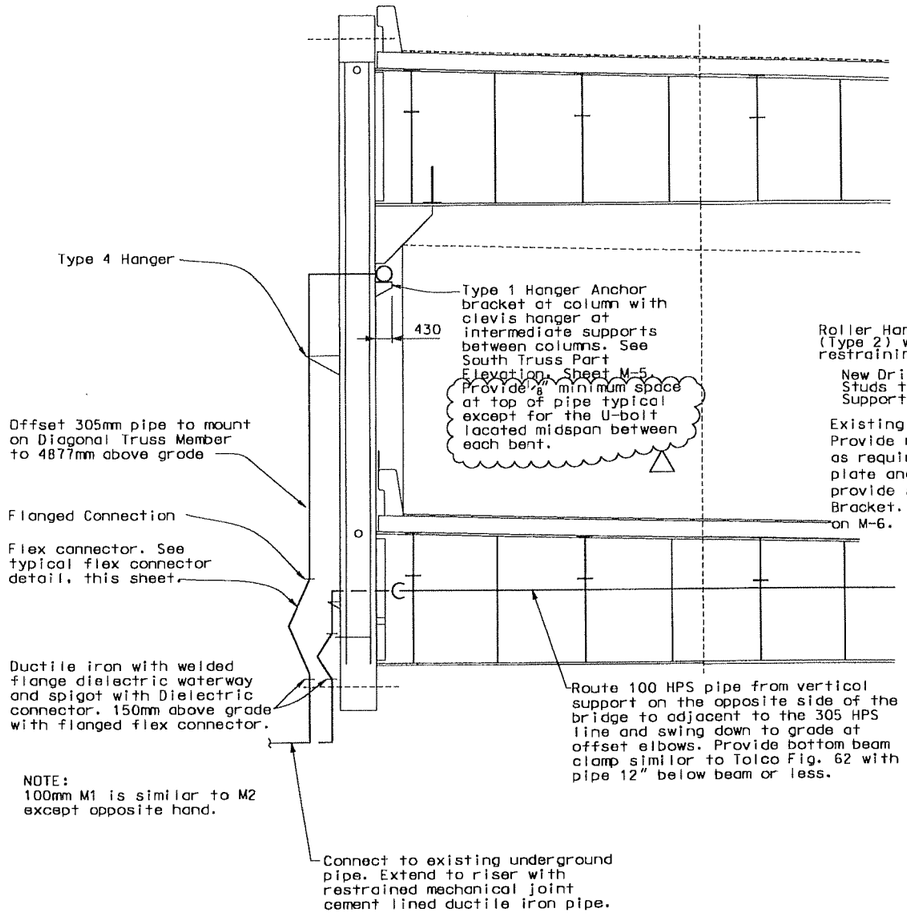

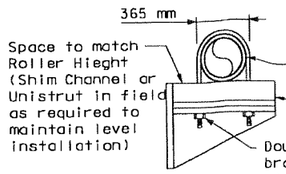

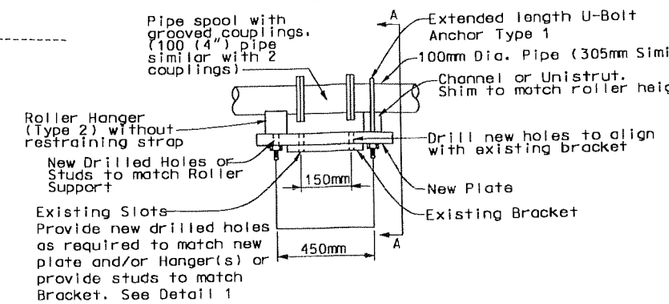

TYPE 1 HANGER
4 WAY PIPE ANCHOR BRACKET
NO SCALE

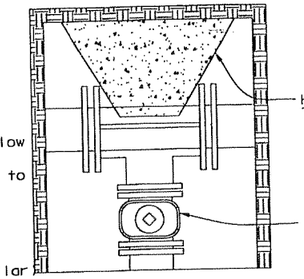

WET TAP SLEEVE AND VALVE
NO SCALE

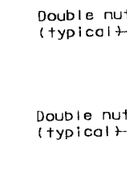

TYPE 3 HANGER
CLEVIS HANGER
NO SCALE

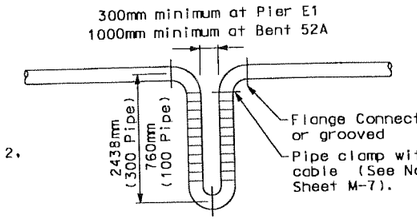

TYPICAL FLEX CONNECTOR
To be used for the water lines crossing the seismic expansion joints
NO SCALE

Note: Legs of flex connectors can be fabricated with offsets at contractors option. Provide V type or U type connection at contractors option.

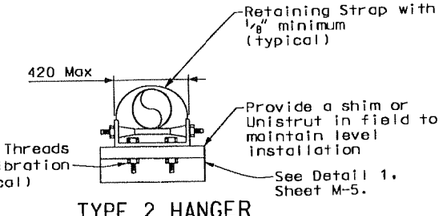

TYPE 2 HANGER
ROLLER HANGER BRACKET
NO SCALE

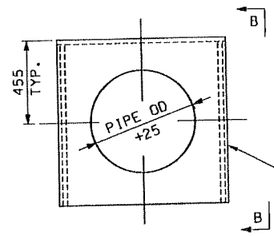

TYPE 4 HANGER DETAIL
NO SCALE

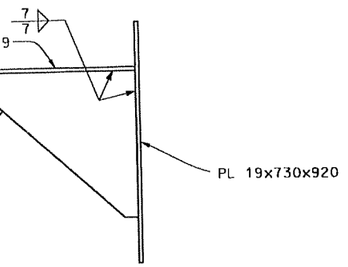

SECTION B-B
NO SCALE

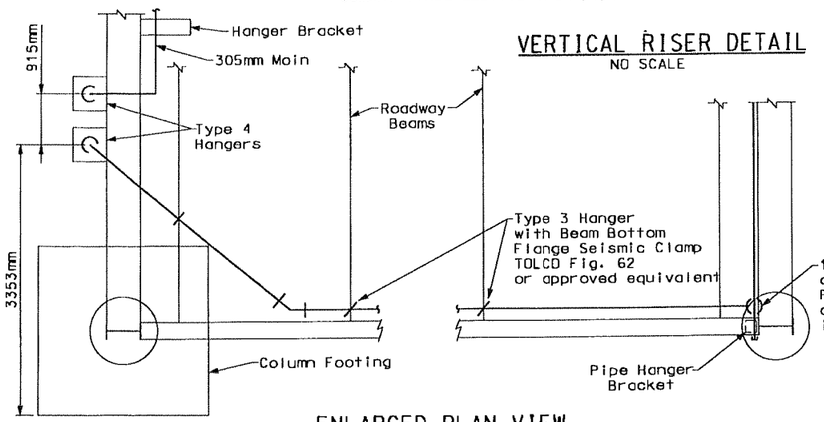

VERTICAL RISER DETAIL
NO SCALE

ENLARGED PLAN VIEW
WEST END TIE-IN
NO SCALE

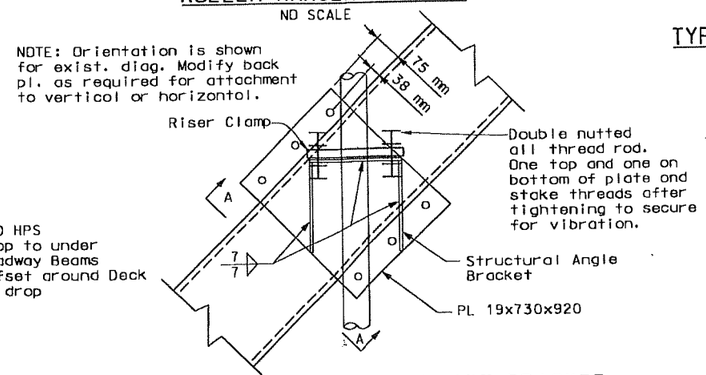

TYPE 4 HANGER PIPE SUPPORT BRACKET
RISER CLAMP ELEVATION
NO SCALE

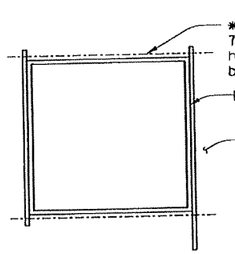

SECTION A-A
NO SCALE

NOTES: (At all U-bolts)

1. Provide 1/8" min space between the U-bolt and top of the pipe, except at the U-bolt located midspan between each bent.

MARK	DATE	DESCRIPTIONS REVISIONS	BY	CH'D	CCO#

CONTRACT CHANGE ORDER NO. 12851
SHEET 4 OF 8

ALL DIMENSIONS ARE IN MILLIMETERS UNLESS OTHERWISE SHOWN

DIST	COUNTY	ROUTE	KILOMETER POST TOTAL PROJECT	SHEET No	TOTAL SHEETS
04	Ala	80	12.6/13.2		

07-08-09
REGISTERED MECH. ENGINEER
PLANS APPROVAL DATE

The State of California or its officers or agents shall not be responsible for the accuracy or completeness of electronic copies of this plan sheet.

JOHN D. COAD Jr. No. 22566-M Exp. 12-31-09 MECHANICAL — REGISTERED PROFESSIONAL ENGINEER — STATE OF CALIFORNIA

PB Americas, Inc.
303 Second Street, Suite 700N
San Francisco, CA 94107

Caltrans now has a web site! To get to the web site, go to: http://www.dot.ca.gov

HONG WONG, DESIGN OVERSIGHT	DESIGN	BY Ken Tella 07-08-09	CHECKED Jack Coad 07-08-09	PREPARED FOR THE STATE OF CALIFORNIA DEPARTMENT OF TRANSPORTATION
SIGN OFF DATE	DETAILS	BY Ken Tella 07-08-09	CHECKED Jack Coad 07-08-09	
	QUANTITIES	BY Ken Tella 07-08-09	CHECKED Jack Coad 07-08-09	

Johnny Kuo, PROJECT ENGINEER
CU 04251
EA 0120R1

BRIDGE NO. 34-0006
KILOMETER POST 12.6
DISREGARD PRINTS BEARING EARLIER REVISION DATES

TEMPORARY BYPASS STRUCTURES
WATER PIPING DETAILS

M-4R2 | SHEET | OF

REVISION DATES (PRELIMINARY STAGE ONLY)

DESIGN DETAIL SHEET (METRIC) (REV. 3/1/98)

ORIGINAL SCALE IN MILLIMETERS FOR REDUCED PLANS 0 10 20 30 40 50 60 70 80 90 100

FILE -) T:\13633A-OaklandBayBridgeSubstation\Task 0 - SSD Civil\Microstation\Drawings\13103as04.dgn

USERNAME -)hendry DATE PLOTTED -) 11/24/2009 TIME PLOTTED -) 11:14:34 AM

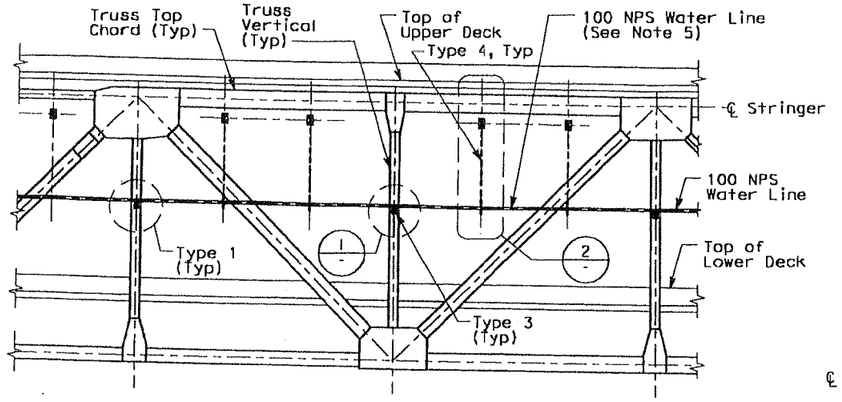

SOUTH TRUSS PART ELEVATION

1:125

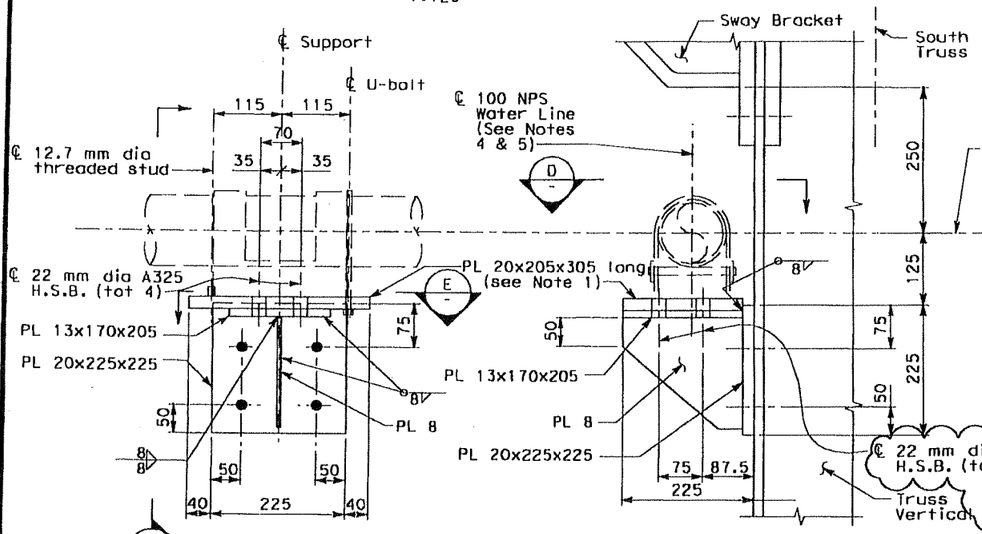

TYPE 3
(See note 1)

A SECTION

1:5

D SECTION

1:5

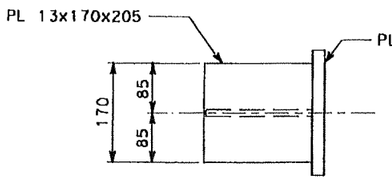

I DETAIL

1:5

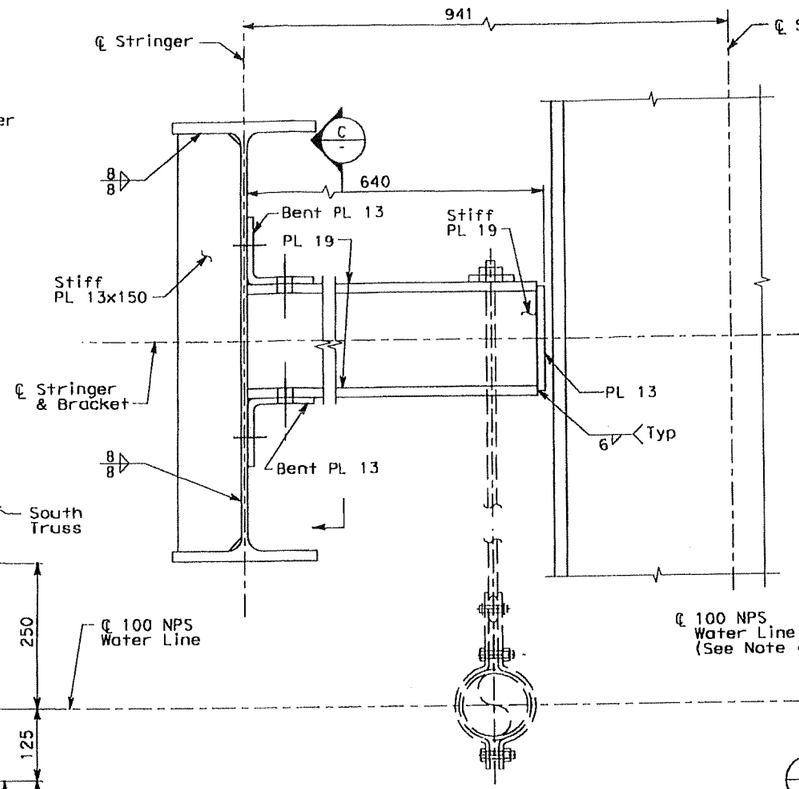

B SECTION

1:5

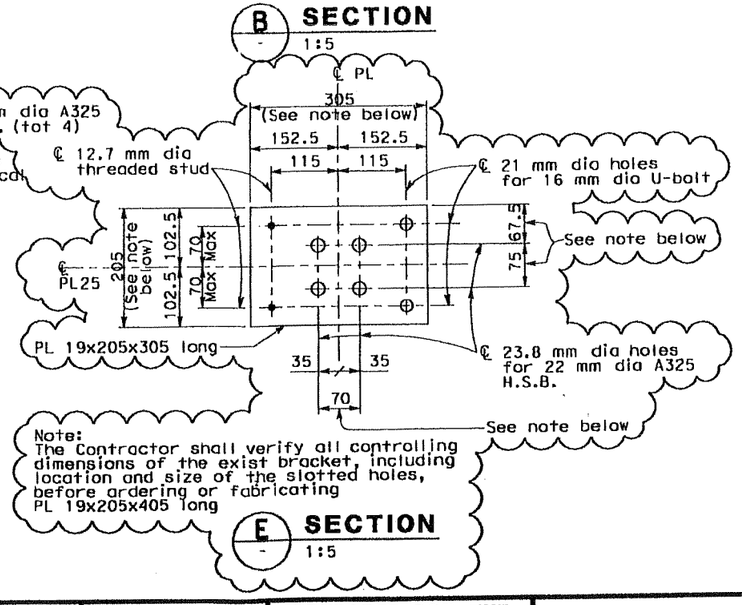

Note:
The Contractor shall verify all controlling dimensions of the exist bracket, including location and size of the slotted holes, before ordering or fabricating PL 19x205x405 long

E SECTION

1:5

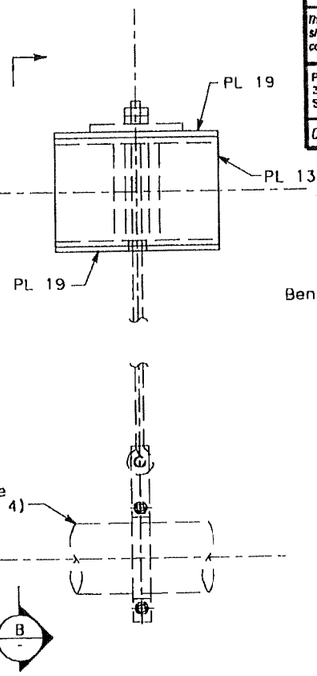

TYPE 4
(See note 2)

2 DETAIL

1:5

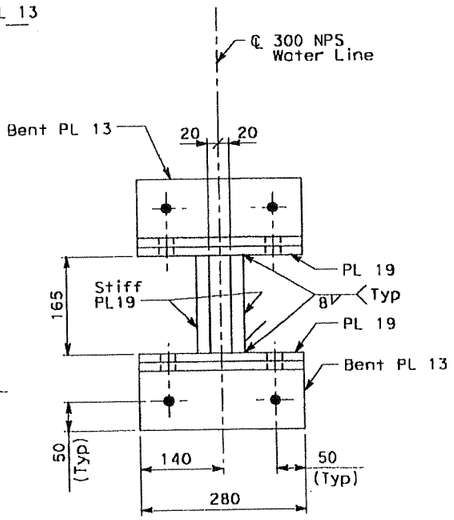

C SECTION

1:5

MARK	DATE	DESCRIPTIONS	BY	CH'D	CCO#
		REVISIONS			

CONTRACT CHANGE ORDER NO. 128S1
SHEET 5 OF 8

NOTES:

1. Type 3 100 NPS Water line support located at each Vertical Truss member.
2. Type 4 100 NPS Water line support located 1/3 points span locations (between vertical Truss Member supports).
3. All Bolts shall be 19 mm ø HS Bolts, ASTM A325, U.N.O.
4. This sheet shows structural support at the 100 NPS water line. For brackets, threaded rods and other support hardware of the water line see sheet no. M-4.
5. Lateral location of Water Line to be determined by others.

ALL DIMENSIONS ARE IN MILLIMETERS UNLESS OTHERWISE SHOWN

Caltrans Metric

DIST	COUNTY	ROUTE	KILOMETER POST TOTAL PROJECT	SHEET NO	TOTAL SHEETS
04	Ala	80	12.6/13.2		

Gregory Benkovich
REGISTERED CIVIL ENGINEER

02/27/2008
PLANS APPROVAL DATE

REGISTERED PROFESSIONAL ENGINEER — Gregory Benkovich — No. C40518 — Exp. 3/31/09 — CIVIL — STATE OF CALIFORNIA

The State of California or its officers or agents shall not be responsible for the accuracy or completeness of electronic copies of this plan sheet.

PB Americas, Inc.
303 Second Street, Suite 700N
San Francisco, CA 94107

Caltrans now has a web site! To get to the web site, go to: http://www.dot.ca.gov

HONG WONG, DESIGN OVERSIGHT		DESIGN: G. Benkovich	CHECKED: B. Nadell	PREPARED FOR THE STATE OF CALIFORNIA DEPARTMENT OF TRANSPORTATION	Johnny Kuo, PROJECT ENGINEER
SIGN OFF DATE		DETAILS: O. Kurnovskaya	CHECKED: G. Benkovich		
		QUANTITIES: G. Benkovich	CHECKED: B. Nadell		

BRIDGE NO. 34-0006
KILOMETER POST 12.6

TEMPORARY BYPASS STRUCTURES

WATER PIPING DETAILS NO. 2

M-5R

CU 04251
EA 0120L1

DISREGARD PRINTS BEARING EARLIER REVISION DATES → REVISION DATES (PRELIMINARY STAGE ONLY) 6/24/2009

DESIGN DETAIL SHEET (METRIC) REV. 3/1/98

ORIGINAL SCALE IN MILLIMETERS FOR REDUCED PLANS 0 10 20 30 40 50 60 70 80 90 100

FILE => T:\13103\SouthDetour\CCO ETI-1\struc\pipe support\13103as05.dgn

USERNAME => rlcaffert DATE PLOTTED => 6/23/2009 TIME PLOTTED => 12:57:00 PM

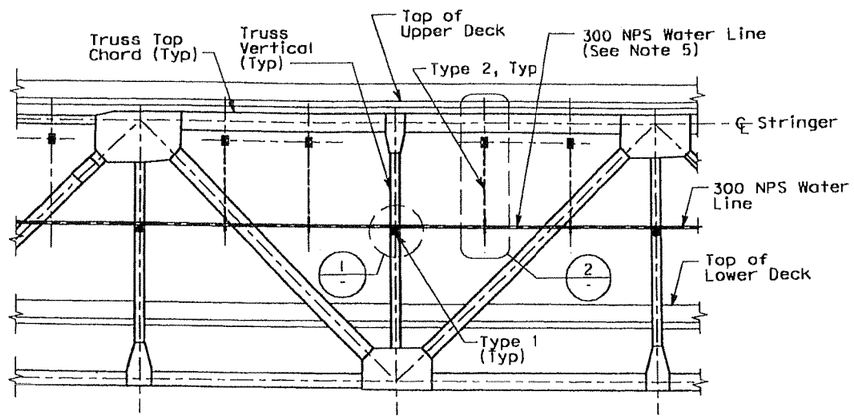

NORTH TRUSS PART ELEVATION

1:125

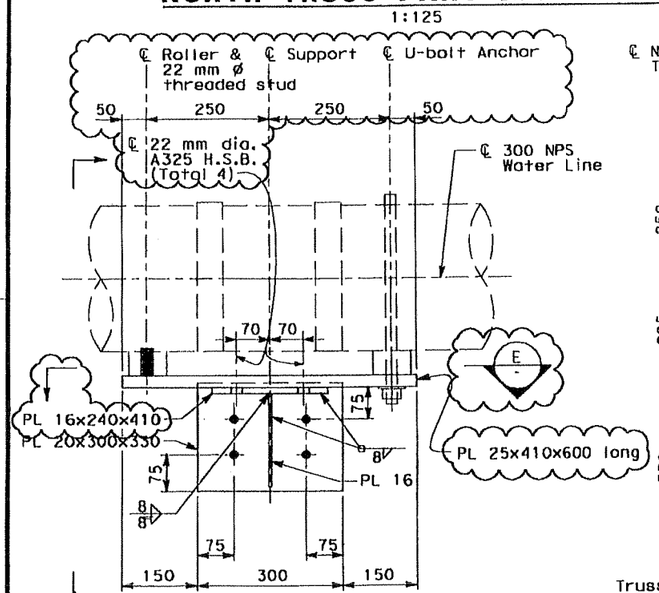

TYPE 1
(See note 1)

1 DETAIL 1:5

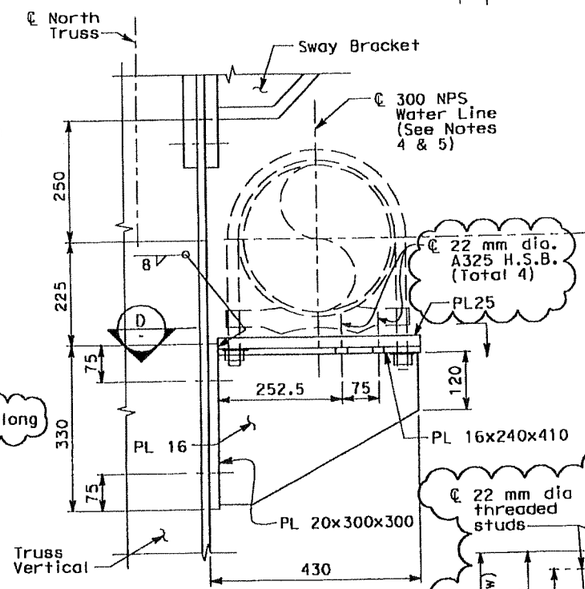

B SECTION 1:5

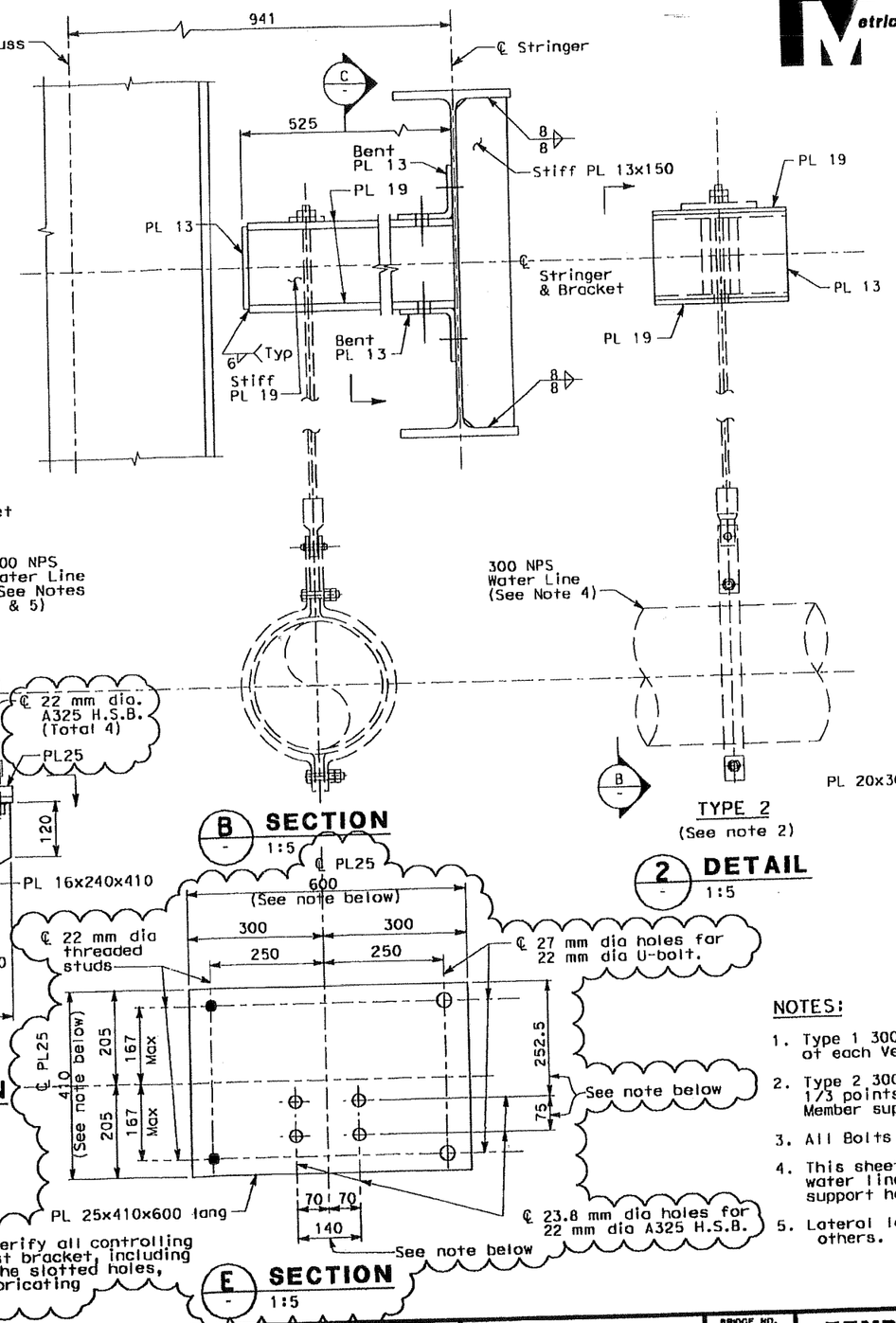

TYPE 2
(See note 2)

2 DETAIL 1:5

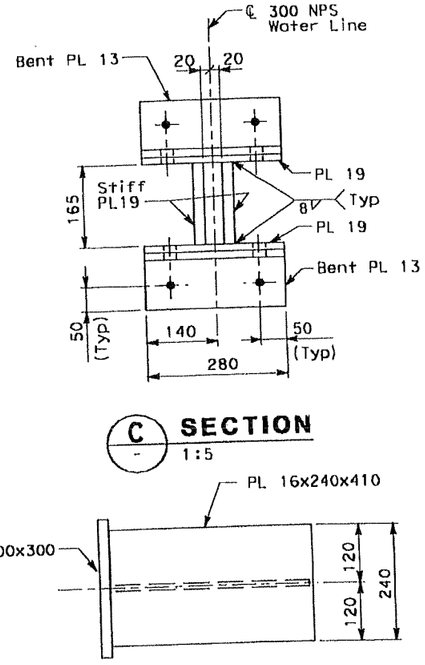

C SECTION 1:5

D SECTION 1:5

A SECTION 1:5

E SECTION 1:5

Note:
The Contractor shall verify all controlling dimensions of the exist bracket, including location and size of the slotted holes, before ordering or fabricating PL 25x410x600 long

NOTES:

1. Type 1 300 NPS Water line support located at each Vertical Truss member.
2. Type 2 300 NPS Water line support located 1/3 points span locations (between vertical Truss Member supports).
3. All Bolts shall be 19 mm ø HS Bolts, ASTM A325, U.N.O.
4. This sheet shows structural support at the 300 NPS water line. For brackets, threaded rods and other support hardware of the water line see sheet no. M-4.
5. Lateral location of Water Line to be determined by others.

ALL DIMENSIONS ARE IN MILLIMETERS UNLESS OTHERWISE SHOWN

MARK	DATE	DESCRIPTIONS	BY	CH'D	CCO#
△	-	REVISIONS			

CONTRACT CHANGE ORDER NO. 12851
SHEET 6 OF 8

DIST	COUNTY	ROUTE	KILOMETER POST TOTAL PROJECT	SHEET No	TOTAL SHEETS
04	Ala	80	12.6/13.2		

Caltrans Metric

Gregory Berkovich
REGISTERED CIVIL ENGINEER

02/27/2008
PLANS APPROVAL DATE

REGISTERED PROFESSIONAL ENGINEER — Gregory Berkovich — No. C40518 — Exp. 3/31/09 — CIVIL — STATE OF CALIFORNIA

The State of California or its officers or agents shall not be responsible for the accuracy or completeness of electronic copies of this plan sheet.

PB Americas, Inc.
303 Second Street, Suite 700N
San Francisco, CA 94107

Caltrans now has a web site! To get to the web site, go to: http://www.dot.ca.gov

HONG WONG — DESIGN OVERSIGHT					
SIGN OFF DATE					
DESIGN DETAIL SHEET (METRIC) (REV. 3/1/98)	DESIGN	G. Benkovich	CHECKED	B. Nodell	
	DETAILS	O. Kurnovskoya	CHECKED	G. Benkovich	
	QUANTITIES	G. Benkovich	CHECKED	B. Nodell	

ORIGINAL SCALE IN MILLIMETERS FOR REDUCED PLANS 0 10 20 30 40 50 60 70 80 90 100

PREPARED FOR THE STATE OF CALIFORNIA DEPARTMENT OF TRANSPORTATION

Johnny Kuo — PROJECT ENGINEER

CU 04251
EA 0120L1

BRIDGE NO. 34-0006
KILOMETER POST 12.6

TEMPORARY BYPASS STRUCTURES
WATER PIPING DETAILS NO. 3

M-6R

REVISION DATES (PRELIMINARY STAGE ONLY) — SHEET — OF

DISREGARD PRINTS BEARING EARLIER REVISION DATES → 6/24/2009

FILE => T:\1303\SouthDetour\CCO ETI-1\struc\pipe support\1303as06.dgn

USERNAME => rfarrent DATE PLOTTED => 6/23/2009 TIME PLOTTED => 12:43:13 PM

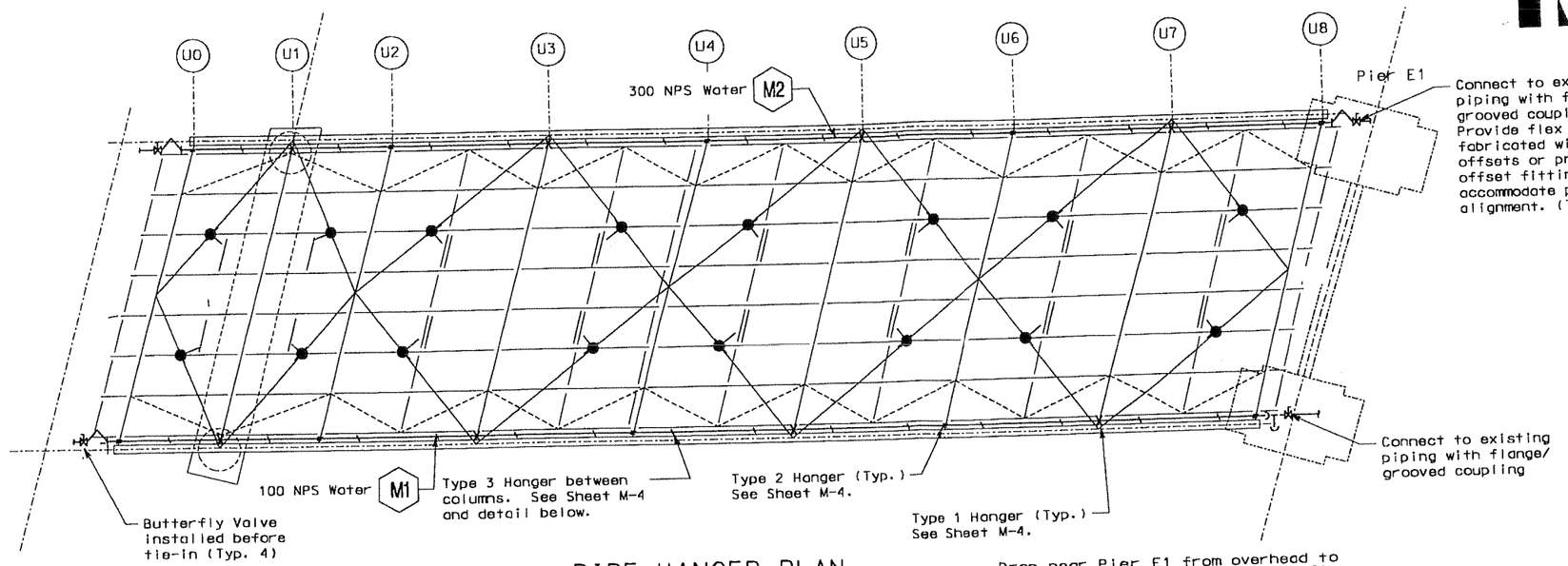

PIPE HANGER PLAN

NO SCALE

Drop near Pier E1 from overhead to bridge deck and provide V type flex connector in vertical piping with cable indicated in note 5 (this sheet). Offset around bridge deck and align with existing 100 NPS pipe. Provide field fabricated spool pieces for final connection.

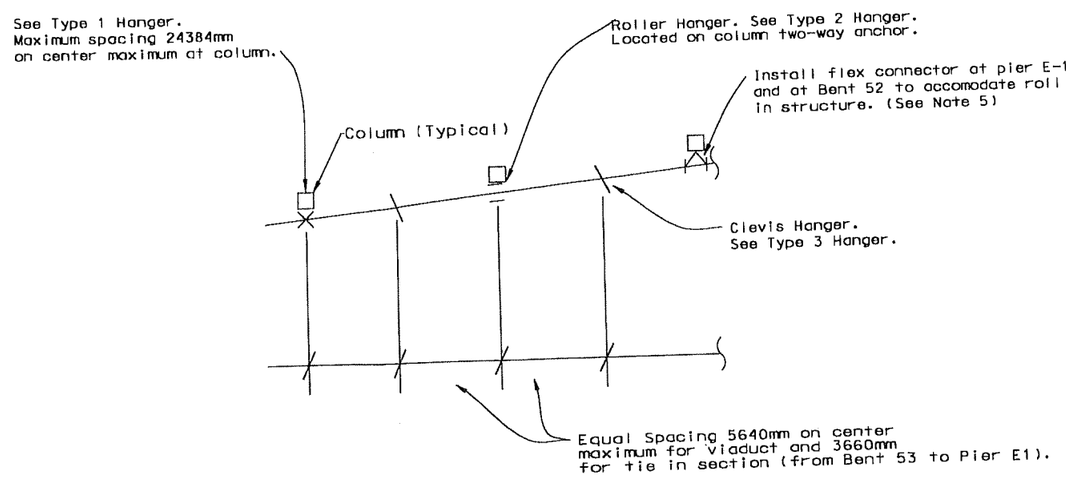

TYPICAL HANGER GENERAL ARRANGEMENT

NO SCALE

NOTES:

1. Use Type 1 Hangeranchors at columns U1, U3, U5 AND U7.

2. Use type 2 Hanger rollers at columns U0, U2, U4, U6 and U8.

3. Use Type 3 Clevis Hanger on intermediate hangers at mid points (5640 max.) per bay.

4. Install Butterfly valves at pier E-1 and at column U0 in Phase 1 prior to cutting existing bridge connection. Install flex connection piping on this sheet in tie in structure prior to Roll-in Phase.

5. Where additional space is required for flex connector to offset for alignment, the roller hangers at columns U0 and U8 may be omitted. Provide a 12mm cable with between 50mm and 300mm slack in cable. Connect the top end of the cable to a nut with staked threads on (3/4") eye bolt with oversize washer in the 25x400 slot on the existing hanger bracket, and connect the other end to a pipe clamp. Both cable ends receive a drop forged yoke end wire rope socket with clevis pin to attach rope to pipe clamp at flanged end of flex connector and to eye bolt.

6. Demolish existing 100 NPS and 300 NPS up to flanged pipe connection. Leave flange for new piping connection.

DIST	COUNTY	ROUTE	KILOMETER POST TOTAL PROJECT	SHEET No	TOTAL SHEETS
04	Ala	80	12.6/13.2		

07-08-09
REGISTERED MECH ENGINEER

REGISTERED PROFESSIONAL ENGINEER JOHN D. COAD JR. No. 22585-M Exp. 12-31-09 MECHANICAL STATE OF CALIFORNIA

PLANSAPPROVALDATE

The State of California or its officers or agents shall not be responsible for the accuracy or completeness of electronic copies of this plan sheet.

PB Americas, Inc.
303 Second Street, Suite 700N
San Francisco, CA 94107

Caltrans now has a web site! To get to the web site, go to: http://www.dot.ca.gov

MARK	DATE	DESCRIPTIONS	BY	CH'D	CCO#
△		REVISIONS			

CONTRACT CHANGE ORDER NO. 12851
SHEET 7 OF 8

ALL DIMENSIONS ARE IN MILLIMETERS UNLESS OTHERWISE SHOWN

DESIGN	BY Ken Tella 07-08-09	CHECKED Jack Coad 07-08-09	
DETAILS	BY Ken Tella 07-08-09	CHECKED Jack Coad 07-08-09	
QUANTITIES	BY Ken Tella 07-08-09	CHECKED Jack Coad 07-08-09	

HONG WONG
DESIGN OVERSIGHT

SIGN OFF DATE

DESIGN DETAIL SHEET (METRIC) (REV. 3/1/98)

ORIGINAL SCALE IN MILLIMETERS FOR REDUCED PLANS 0 10 20 30 40 50 60 70 80 90 100

PREPARED FOR THE STATE OF CALIFORNIA DEPARTMENT OF TRANSPORTATION

Johnny Kuo
PROJECT ENGINEER

CU 04251
EA 0120R1

BRIDGE NO.	TEMPORARY BYPASS STRUCTURES	
34-0006	WATER PIPING PLAN NO.4	M-7R2
KILOMETER POST 12.6		SHEET OF

DISREGARD PRINTS BEARING EARLIER REVISION DATES →
REVISION DATES (PRELIMINARY STAGE ONLY)

FILE -) T:\13633A-OaklandBayBridgeSubstation\Task 0 - SSD Civil\Microstation\Drawings\13103as07.dgn

DATE PLOTTED -) 11/17/2009 TIME PLOTTED -) 11:00:35 AM USERNAME -) kendry

PARSONS BRINCKERHOFF
COMPUTATION SHEET

Page _____ of _____

Made by KEN TELLA

Date 8/11/09

Checked by _____

Date REVISED 8/14/09

Subject SF08B WEST TIE-IN
FIRE HOSE VALVE

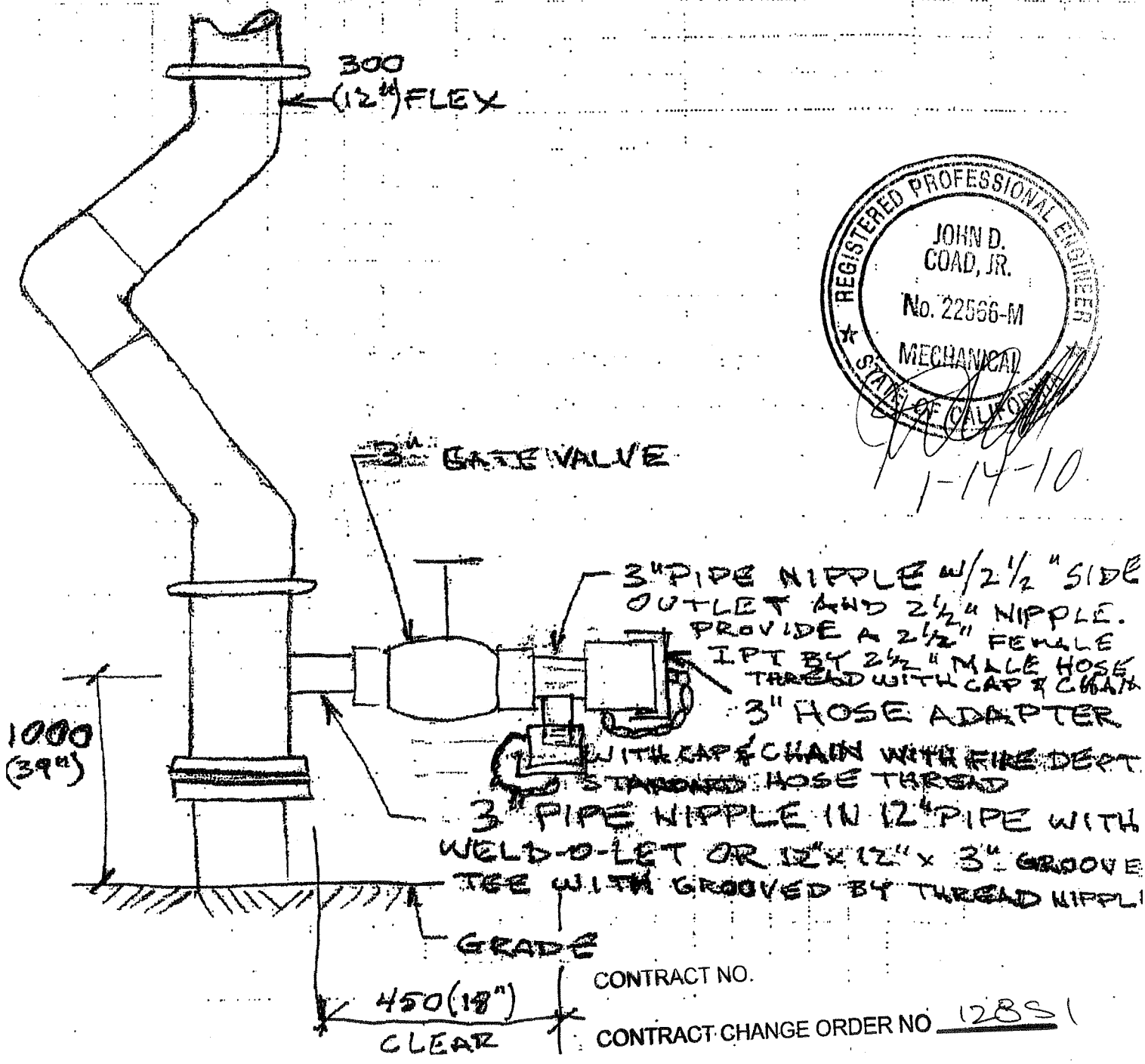

REGISTERED PROFESSIONAL ENGINEER
JOHN D. COAD, JR.
No. 22566-M
MECHANICAL
STATE OF CALIFORNIA

1-14-10

CONTRACT NO.

CONTRACT CHANGE ORDER NO 1285 1

SHEET 8 OF 8

CONTRACT CHANGE ORDER

Change Requested by: Engineer

CCO 129	Suppl. No. 0	Contract No. 04 - 0120R4	Road SF-80-12.6/13.2	FED. AID LOC.: ACBRIM-080-1(097)N

To: CC MYERS INC

You are directed to make the following changes from the plans and specifications or do the following described work not included in the plans and specifications for this contract. ***NOTE: This change order is not effective until approved by the Engineer.***

Description of work to be done, estimate of quantities and prices to be paid. (Segregate between additional work at contract price, agreed price and force account.) Unless otherwise stated, rates for rental of equipment cover only such time as equipment is actually used and no allowance will be made for idle time. This last percentage shown is the net accumulated increase or decrease from the original quantity in the Engineer's Estimate.

Extra Work at Lump Sum:

Perform the following work pertaining to the East Tie-In (ETI) portion of the Temporary Bypass Structure (Bridge No. 34-0006 (TEMP)).

1) Provide for the erection of the steel skid bent and beam in accordance with the plans and specifications of Pages No. 3 through 39 of Change Order No. 116.

2) Provide for the erection of the steel truss in accordance with the plans and specifications of Pages No. 3 through 84 of Change Order No. 140.

3) Provide for the loading, transportation and offloading of all fabricated steel for the truss from the Contractor's lay down yard at Mare Island in Vallejo or at Pier 80 in San Francisco to the jobsite.

4) Furnish and install the metal decking, decking support brackets, and shear studs for the truss' concrete deck.

5) Furnish and apply an acoustic dampening material to the upper deck of the truss in accordance with Section 5-1.14 "Contractor Design" of the contract Special Provisions.

For this work, the Contractor will be compensated a lump sum of $14,712,500.00. This sum constitutes full and final compensation for all costs, including all markups, for the work specified herein.

Compensation for the following 9 items of work pertaining to the erection of the ETI steel truss, skid bent, and skid beam have not been addressed by this change order:

1) Costs associated with furnishing and installing the ETI expansion joints (including expansion joint barrier) and bearings (including bearing stopper blocks and masonry plates).

2) Costs associated with furnishing and placing the reinforcing steel and concrete for the truss' concrete deck and barrier.

3) Costs associated with the construction of the temporary work platform to access the southern end of the truss and any crane roads or pads required for the truss and skid bent erection.

4) Costs associated with furnishing and installing any piles required for the foundation of the falsework required for the erection of the truss.

5) Costs associated with furnishing and installing concrete pads or embeds required for the work elevator for the truss.

6) Costs associated with cleaning the fabricated steel due to excessive salt water residue.

7) Costs associated with any weld inspection pertaining to the erection of the truss, skid bent, and skid beam.

8) Costs associated with any traffic control pertaining to the erection of the truss, skid bent, and skid beam.

9) Costs associated with handling, transporting and off-loading of the fabricated steel for the skid bent and skid beam from the Contractor's lay down yard to the jobsite.

CONTRACT CHANGE ORDER

Change Requested by: Engineer

CCO 129	Suppl. No. 0	Contract No. 04 - 0120R4	Road SF-80-12.6/13.2	FED. AID LOC.: ACBRIM-080-1(097)N

Compensation for the 9 items of work specified above shall be paid under a separate change order.

The fabrication of the truss shall be performed in a manner that shall minimize the stresses in the structure in its permanen (post-camber) geometric configuration. This requires the fabrication of all field end holes (bolt holes) to match the permanent configuration as opposed to their cambered position. It is understood that this fabrication method could result in considerable additional cost in the erection of the structure. Particularly, the erection may require truss members to be manipulated by force in order to match the end connections. Compensation provided herein includes all additional costs resulting from this specified fabrication method.

The compensation provided under this change order is based on the construction of a temporary work platform that will allow crane access from the southern end of the truss during erection. The cost of constructing this work platform is excluded from this change order and shall be paid separately. In the event this platform is not constructed and crane access from the southern end of the truss is not available, the Contractor shall be compensated an additional $535,000.00 for all additional costs resulting from this limited access. This compensation, if required, shall be paid under a separate change order.

The compensation provided under this change order is based on steel erection being performed under a 10-hour day 6-day per week schedule in an effort to support the placement of traffic on the Temporary Bypass Structure by September 8, 2009. This effort is based on steel delivery to the jobsite or lay down yard beginning as outlined below:

1) Fabricated Steel for Skid Beam & Bent (Bents A3 through A6 & Bents B3 through B6) - Steel delivery shall begin by December 23, 2008.

2) Fabricated Steel for Skid Beam & Bent (Bents A1 through A2 & Bents B1 through B2) - Steel delivery shall begin by Apri 9, 2009.

3) Fabricated Steel for the Truss - Steel delivery shall begin by March 7, 2009.

In the event these steel delivery schedules are not met or ensuing deliveries are insufficient to sustain the Contractor's erection operations, the Contractor may be ordered by the Engineer to expedite their subsequent steel erection activities in order to mitigate any delays to the completion of the work. Any costs associated with any expedition of the work, if so ordered, shall be compensated separately from this change order.

Estimated cost of Extra Work at Lump Sum $14,712,500.00

Estimated Cost: Increase ☑ Decrease ☐ **$14,712,500.00**

By **reason of this order the time of completion will be adjusted as follows:** Deferred

Submitted by

Signature	Resident Engineer	Date
	BILL CASEY	10-24-08

Approval Recommended by

Signature	SFOBB Construction Manager	Date
P Siegenthaler	PETER SIEGENTHALER	10/28/08

Engineer Approval by

Signature	SFOBB Construction Manager	Date
P Siegenthaler	PETER SIEGENTHALER	11/24/08

We the undersigned contractor, have given careful consideration to the change proposed and agree, if this proposal is approved, that we will provide all equipment, furnish the materials, except as may otherwise be noted above, and perform all services necessary for the work above specified, and will accept as full payment therefor the prices shown above.

NOTE: If you, the contractor, do not sign acceptance of this order, your attention is directed to the requirements of the specifications as to proceeding with the ordered work and filing a written protest within the time therein specified.

Contractor Acceptance by

Signature	(Print name and title)	Date
D E Hauck	DANIEL E. HAUCK, PRESIDENT	11/19/08

CONTRACT CHANGE ORDER

Change Requested by: Engineer

CCO 129	Suppl. No. 1	Contract No. 04 - 0120R4	Road SF-80-12.6/13.2	FED. AID LOC.: ACBRIM-080-1(097)N

To: **CC MYERS INC**

You are directed to make the following changes from the plans and specifications or do the following described work not included in the plans and specifications for this contract. ***NOTE: This change order is not effective until approved by the Engineer.***

Description of work to be done, estimate of quantities and prices to be paid. (Segregate between additional work at contract price, agreed price and force account.) Unless otherwise stated, rates for rental of equipment cover only such time as equipment is actually used and no allowance will be made for idle time. This last percentage shown is the net accumulated increase or decrease from the original quantity in the Engineer's Estimate.

Adjustment of Compensation at Lump Sum:

Complete the erection and construction of the East Tie-In truss and associated metal decking including all shear studs, bolting and testing by June 19, 2009, as necessary to permit placement of the East Tie-In truss deck reinforcing steel and concrete.

The Contractor agrees to accept the lump sum of $535,000.00 as full compensation for any and all additional labor, materials and equipment costs incurred as a result of this change, including all surcharges, markups, profit, and any adverse impacts to productivity and efficiency. The aforementioned lump sum shall include full compensation for all additional overtime and working nights, Sundays and holidays as necessary to perform this work.

In the event the East Tie-In truss and associated metal decking, including all shear studs, bolting and testing, are completed prior to June 19, 2009, the Contractor shall be paid additional incentives as outlined below on subsequent supplemental contract change orders:

Completion Date	Additional Incentive
6/18/2009	$107,000.00
6/17/2009	$214,000.00
6/16/2009	$321,000.00
6/15/2009	$428,000.00
6/14/2009	$481,500.00
6/13/2009	$535,000.00
6/12/2009	$588,500.00
6/11/2009	$642,000.00
6/10/2009	$695,500.00
6/9/2009	$749,000.00
6/8/2009	$802,500.00
6/7/2009	$856,000.00
6/6/2009	$909,500.00
6/5/2009	$963,000.00
6/4/2009	$1,016,500.00
6/3/2009	$1,070,000.00
6/2/2009	$1,123,500.00
6/1/2009 or earlier	$1,177,000.00

RECEIVED
010215 MAY -7 09

The contractor agrees that payment of the above referenced incentives shall constitute full compensation of all costs incurred to achieve the associated referenced completion dates, including all surcharges, markups, profit, and any adverse impacts to productivity and efficiency. No further compensation shall be allowed.

Total Cost of Adjustment of Compensation at Lump Sum $535,000.00

CONTRACT CHANGE ORDER

Change Requested by: Engineer

CCO 129	Suppl. No. 1	Contract No. 04 - 0120R4	Road SF-80-12.6/13.2	FED. AID LOC.: ACBRIM-080-1(097)N

Estimated Cost: Increase ☑ Decrease ☐ $535,000.00

By reason of this order the time of completion will be adjusted as follows: 0 days

Submitted by

Signature	Resident Engineer	Date
	BILL CASEY	3-4-09

Approval Recommended by

Signature	SFOBB Construction Manager	Date
Mike Forner	MIKE FORNER	3-4-09

Engineer Approval by

Signature	SFOBB Construction Manager	Date
Michael Forner	MIKE FORNER	3-19-09

We the undersigned contractor, have given careful consideration to the change proposed and agree, if this proposal is approved, that we will provide all equipment, furnish the materials, except as may otherwise be noted above, and perform all services necessary for the work above specified, and will accept as full payment therefor the prices shown above.

NOTE: If you, the contractor, do not sign acceptance of this order, your attention is directed to the requirements of the specifications as to proceeding with the ordered work and filing a written protest within the time therein specified.

Contractor Acceptance by

Signature	(Print name and title)	Date
	DANIEL E. HAMUCK, PRESIDENT	3/17/09

CONTRACT CHANGE ORDER MEMORANDUM

TO: MIKE FORNER / DEANNA VILCHECK	FILE: E.A. 04 - 0120R4
	CO-RTE-PM SF-80-12.6/13.2
FROM: BILL CASEY	FED. NO. ACBRIM-080-1(097)N
CCO#: **129** SUPPLEMENT#: **1** Category Code: **BZZZ**	CONTINGENCY BALANCE (incl. this change) **$70,288,345.05**
COST: **$535,000.00** INCREASE ☑ DECREASE ☐	HEADQUARTERS APPROVAL REQUIRED? ☐ YES ☑ NO
SUPPLEMENTAL FUNDS PROVIDED: **$0.00**	IS THIS REQUEST IN ACCORDANCE WITH ENVIRONMENTAL DOCUMENTS? ☑ YES ☐ NO
CCO DESCRIPTION: Acceleration of ETI Truss	**PROJECT DESCRIPTION:** CONSTRUCT ROUTE 80 TEMP BYPASS STRUCTURE

Original Contract Time:	Time Adj. This Change:	Previously Approved CCO Time Adjustments:	Percentage Time Adjusted: (including this change)	Total # of Unreconciled Deferred Time CCO(s): (including this change)
475 Day(s)	**0** Day(s)	**1195** Day(s)	**252** %	**7**

THIS CHANGE ORDER PROVIDES FOR:

a monetary incentive to the Contractor to complete the erection and construction of the East Tie-In truss and associated metal decking, including shear studs, bolting and testing, by June 19, 2009.

The Temporary Bypass Structure (TBS) was awarded in March 2004 to construct a detour that will allow for the tie in of the new east span of the San Francisco Oakland Bay Bridge to Yerba Buena Island. The TBS encompasses three main structures, the East Tie-In to the existing bridge, the West Tie-In (WTI) to Yerba Buena Island, and the Viaduct structure between the two tie ins.

A December 14, 2006 Department strategy memorandum, approved by Tony Anziano - Toll Bridge Program Manager and Richard Land - Chief Engineer, recommended that the Department assume the design responsibility for the East Tie-In (ETI) structure. Based on this memorandum, the design of the structure was changed from a design that incorporated the existing steel truss bridge with the new structure to a design that replaces the existing structure with a new structure (roll out / roll in).

CCO 129 Supplemental 0 includes compensation of $535,000.00 for potential costs which may be incurred as a result of delays to the construction of temporary crane access. Supplemental 1 proposes to compensate the contractor for costs incurred to accelerate the construction of the ETI Truss and associated metal decking for $535,000.00. It is coincidental that two amounts are the same.

Compensation for this change shall be performed as an Adjustment of Compensation at Lump Sum. The contractor shall be paid the lump sum of $535,000.00 to complete the erection and construction of the East Tie-In Truss and metal decking including shear studs, bolting and testing, by June 19, 2009. In the event the contractor is able to complete said activities prior to June 19, 2009, additional incentives shall be paid as outlined below on subsequent supplemental contract change orders:

Completion Date	Additional Incentive
6/18/2009	$107,000.00
6/17/2009	$214,000.00
6/16/2009	$321,000.00
6/15/2009	$428,000.00
6/14/2009	$481,500.00
6/13/2009	$535,000.00
6/12/2009	$588,500.00
6/11/2009	$642,000.00
6/10/2009	$695,500.00
6/9/2009	$749,000.00
6/8/2009	$802,500.00
6/7/2009	$856,000.00
6/6/2009	$909,500.00
6/5/2009	$963,000.00
6/4/2009	$1,016,500.00
6/3/2009	$1,070,000.00
6/2/2009	$1,123,500.00
6/1/2009 or earlier	$1,177,000.00

ADA Notice: For individuals with sensory disabilities, this document is available in alternate formats. For information call: (916) 654-6410 or TDD (916) 654-3880 or write Records and Forms Management, 1120 N Street, MS-89, Sacramento, CA 95814.

The agreed lump sum base acceleration and potential additional incentives will be funded through the contract's contingency funds. A cost analysis is in the project files.

No adjustment of contract time is warranted as the work will not affect the controlling operation.

This change was concurred by Alec Melkonians - Asst. Project Manager, Hong Wong - Project Engineer, and Patrick Treacy - HQ Asst. Construction Coordinator. TBPOC granted an Authorization to Approve at their March 5, 2009 meeting.

Maintenance concurrence is not required, as this is a temporary structure and doesn't affect any permanent roadway features.

CONCURRED BY:			
Construction Engineer:	Bill Casey, Resident Engineer	Date	3/23/08
Bridge Engineer:		Date	
Project Engineer:	Hong Wong, PE	Date	3/3/09
Project Manager:	Alec Melkonians	Date	3/3/09
FHWA Rep.:		Date	
Environmental:		Date	
Other (specify):	Patrick Treacy, HQ Asst.Const.Co	Date	3/3/08
Other (specify):		Date	
District Prior Approval By:		Date	
HQ (Issue Approve) By:	Bob Molera, HQ CCO Engineer	Date	3/4/08
Resident Engineer's Signature:	3-23-09	Date	

ESTIMATE OF COST

	THIS REQUEST	TOTAL TO DATE
ITEMS	$0.00	$0.00
FORCE ACCOUNT	$0.00	$0.00
AGREED PRICE	$0.00	$14,712,500.00
ADJUSTMENT	$535,000.00	$535,000.00
TOTAL	$535,000.00	$15,247,500.00

FEDERAL PARTICIPATION

☐ PARTICIPATING ☐ PARTICIPATING IN PART ☑ NONE
☐ NON-PARTICIPATING (MAINTENANCE) ☐ NON-PARTICIPATING

FEDERAL SEGREGATION (if more than one Funding Source or P.I.P. type)
☐ CCO FUNDED PER CONTRACT ☐ CCO FUNDED AS FOLLOWS

FEDERAL FUNDING SOURCE	PERCENT

ADA Notice: For individuals with sensory disabilities, this document is available in alternate formats. For information call: (916) 654-6410 or TDD (916) 654-3880 or write Records and Forms Management, 1120 N Street, MS-89, Sacramento, CA 95814.

STATE OF CALIFORNIA - DEPARTMENT OF TRANSPORTATION

CONTRACT CHANGE ORDER

Change Requested by: Engineer

CCO 129	Suppl. No. 2	Contract No. 04 - 0120R4	Road SF-80-12.6/13.2	FED. AID LOC.: ACBRIM-080-1(097)N

To: **CC MYERS INC**

You are directed to make the following changes from the plans and specifications or do the following described work not included in the plans and specifications for this contract. ***NOTE: This change order is not effective until approved by the Engineer.***

Description of work to be done, estimate of quantities and prices to be paid. (Segregate between additional work at contract price, agreed price and force account.) Unless otherwise stated, rates for rental of equipment cover only such time as equipment is actually used and no allowance will be made for idle time. This last percentage shown is the net accumulated increase or decrease from the original quantity in the Engineer's Estimate.

Adjustment of Compensation at Lump Sum:

In accordance with provisions of Contract Change Order No. 129, Supplement No. 1, provide compensation to the Contractor for completing the erection of the East Tie-In truss by June 1, 2009.

The Contractor will be compensated a lump sum of $1,177,000.00. This sum constitutes full and final compensation for all costs, including all markups, for the work specified herein.

Total Cost of Adjustment of Compensation at Lump Sum $1,177,000.00

Estimated Cost: Increase ☑ Decrease ☐ **$1,177,000.00**

By reason of this order the time of completion will be adjusted as follows: 0 days

Submitted by

Signature	Resident Engineer	Date
	BILL CASEY	6-8-09

Approval Recommended by

Signature	SFOBB Construction Manager	Date
Mike Forner	MIKE FORNER	6-8-09

Engineer Approval by

Signature	SFOBB Construction Manager	Date
Mike Forner	MIKE FORNER	6-9-09

We the undersigned contractor, have given careful consideration to the change proposed and agree, if this proposal is approved, that we will provide all equipment, furnish the materials, except as may otherwise be noted above, and perform all services necessary for the work above specified, and will accept as full payment therefor the prices shown above.

NOTE: If you, the contractor, do not sign acceptance of this order, your attention is directed to the requirements of the specifications as to proceeding with the ordered work and filing a written protest within the time therein specified.

Contractor Acceptance by

Signature	(Print name and title)	Date
N/A	N/A	N/A

STATE OF CALIFORNIA - DEPARTMENT OF TRANSPORTATION

CONTRACT CHANGE ORDER MEMORANDUM

TO: MIKE FORNER / DEANNA VILCHECK	FILE: E.A. 04 - 0120R4
	CO-RTE-PM SF-80-12.6/13.2
FROM: BILL CASEY	FED. NO. ACBRIM-080-1(097)N
CCO#: 129 SUPPLEMENT#: 2 Category Code: BZZZ	CONTINGENCY BALANCE (incl. this change) $47,562,213.59
COST: $1,177,000.00 INCREASE ☑ DECREASE ☐	HEADQUARTERS APPROVAL REQUIRED? ☑ YES ☐ NO
SUPPLEMENTAL FUNDS PROVIDED: $0.00	IS THIS REQUEST IN ACCORDANCE WITH ENVIRONMENTAL DOCUMENTS? ☑ YES ☐ NO
CCO DESCRIPTION: ETI Truss Erection Incentive	PROJECT DESCRIPTION: CONSTRUCT ROUTE 80 TEMP BYPASS STRUCTURE

Original Contract Time:	Time Adj. This Change:	Previously Approved CCO Time Adjustments:	Percentage Time Adjusted: (including this change)	Total # of Unreconciled Deferred Time CCO(s): (including this change)
475 Day(s)	0 Day(s)	1195 Day(s)	252 %	7

THIS CHANGE ORDER PROVIDES FOR:

compensating the Contractor for achieving the full incentive payment as specified under Contract Change Order No. 129, Supplement No. 1 for the early completion of the erection of the East Tie-In steel truss.

This project, the Temporary Bypass Structure (TBS), was awarded in March 2004 to construct a detour that will allow for the tie in of the new east span of the San Francisco Oakland Bay Bridge to Yerba Buena Island. The TBS encompasses three main structures, the East Tie-In (ETI) to the existing bridge, the West Tie-In to Yerba Buena Island and the Viaduct structure between the two tie ins.

A December 14, 2006 Department strategy memorandum, approved by Tony Anziano, Toll Bridge Program Manager, and Richard Land, Chief Engineer, recommended that the Department assume the design responsibility for the East Tie-In (ETI) structure. Based on this memorandum, the design of the structure was changed from a design that incorporated the existing steel truss bridge with the new structure to a design that replaces the existing structure with a new structure (roll out / roll in).

Contract Change Order No. 129, Supplement No. 1 provided compensation to the contractor to complete the erection of the ETI steel truss by June 1, 2009. The change order also specified incentive payments to be provided based on the contractor completing the steel erection prior to June 1, 2009. The contractor had completed the steel erection on May 31, 2009 and has qualified for the full incentive payment as specified under the change order.

This change order provides for the full incentive payment as specified under Change Order No. 129, Supplement No. 1. Approval for this supplemental change order from the TBPOC was previously granted on March 5, 2009 and reaffirmed on June 4, 2009. As such it is not necessary for the Contractor to sign this supplemental, which will be processed unilaterally.

Compensation shall be paid as an adjustment of compensation at an agreed lump sum price of $1,177,000.00 which shall be financed from the contract's contingency funds. A cost analysis are on file.

There will be no time adjustment due to work of this change since the work involved does not affect the controlling operation.

This change was concurred with by Alec Melkonians - Asst. Project Manager, Hong Wong - Project Engineer, and Patrick Treacy - HQ Asst. Construction Coordinator.

Maintenance concurrence is not required as this is an administrative change.

ADA Notice: For individuals with sensory disabilities, this document is available in alternate formats. For information call: (916) 654-6410 or TDD (916) 654-3880 or write Records and Forms Management, 1120 N Street, MS-89, Sacramento, CA 95814.

CONCURRED BY:		
Construction Engineer:	Bill Casey, Resident Engineer	Date 6-8-09
Bridge Engineer:		Date
Project Engineer:	Hong Wong, PE	Date 6/11/09
Project Manager:	Alec Melkonians	Date 6/11/09
FHWA Rep.:		Date
Environmental:		Date
Other (specify):	Patrick Treacy, HQ Asst.Const.Co	Date 6/10/09
Other (specify):		Date
District Prior Approval By:		Date
HQ (Issue Approve) By:	Bob Molera, HQ CCO Engineer	Date 6/9/09
Resident Engineer's Signature:		Date

6-8-09

ESTIMATE OF COST

	THIS REQUEST	TOTAL TO DATE
ITEMS	$0.00	$0.00
FORCE ACCOUNT	$0.00	$0.00
AGREED PRICE	$0.00	$14,712,500.00
ADJUSTMENT	$1,177,000.00	$1,712,000.00
TOTAL	$1,177,000.00	$16,424,500.00

FEDERAL PARTICIPATION

☐ PARTICIPATING ☐ PARTICIPATING IN PART ☑ NONE
☐ NON-PARTICIPATING (MAINTENANCE) ☐ NON-PARTICIPATING

FEDERAL SEGREGATION (if more than one Funding Source or P.I.P. type)
☐ CCO FUNDED PER CONTRACT ☐ CCO FUNDED AS FOLLOWS

FEDERAL FUNDING SOURCE	PERCENT

ADA Notice: For individuals with sensory disabilities, this document is available in alternate formats. For information call: (916) 654-6410 or TDD (916) 654-3880 or write Records and Forms Management, 1120 N Street, MS-89, Sacramento, CA 95814.

CONTRACT CHANGE ORDER

Change Requested by: Engineer

CCO 130	Suppl. No. 0	Contract No. 04 - 0120R4	Road SF-80-12.6/13.2	FED. AID LOC.: ACBRIM-080-1(097)N

To: **CC MYERS INC**

You are directed to make the following changes from the plans and specifications or do the following described work not included in the plans and specifications for this contract. ***NOTE: This change order is not effective until approved by the Engineer.***

Description of work to be done, estimate of quantities and prices to be paid. (Segregate between additional work at contract price, agreed price and force account.) Unless otherwise stated, rates for rental of equipment cover only such time as equipment is actually used and no allowance will be made for idle time. This last percentage shown is the net accumulated increase or decrease from the original quantity in the Engineer's Estimate.

In accordance with Section 5-1.25 "Payments" of the contract Special Provisions, the retention of any percentage of the estimated value of work done or value of materials to have been furnished and delivered to the project as specified under Section 9-1.06 "Partial Payments" of the contract Standard Specifications shall not apply.

This change order provides compensation to the Contractor equal to the cumulative amount of funds withheld on the monthly Progress Payments pertaining to the retention of funds specified under the third paragraph of Section 9-1.06 of the contract Standard Specifications until such time that those retained funds are released by the Department to the Contractor.

Adjustment of Compensation at Lump Sum:

Provide compensation to the Contractor to account for funds retained (based on Section 9-1.06 "Partial Payments" of the contract Standard Specifications) by the Department on monthly Progress Payments. Compensation shall be paid on a monthly basis equal to the amount of funds retained on each Progress Payment.

The final compensation paid under this adjustment shall be $22,110,000.00.

Upon release of the retention withheld by the Department on the monthly Progress Payments, provide a credit to the Department of all corresponding funds paid pertaining to the $22,110,000.00 adjustment provided under this change order.

The final credit provided under this adjustment shall be $22,110,000.00.

Provide compensation to the Contractor for all interest costs incurred as a result of the funds retained (based on Section 9-1.06 "Partial Payments" of the contract Standard Specifications) by the Department on monthly Progress Payments No. 1 through No. 50. For these costs, the Contractor shall be compensated an agreed lump sum of $136,510.00 which represents full compensation for all interest cost incurred pertaining to the retained funds through the April 2008 Progress Payment.

Total Cost of Adjustment of Compensation at Lump Sum $136,510.00

CONTRACT CHANGE ORDER

Change Requested by: Engineer

CCO 130	Suppl. No. 0	Contract No. 04 - 0120R4	Road SF-80-12.6/13.2	FED. AID LOC.: ACBRIM-080-1(097)N

Estimated Cost: Increase ☑ Decrease ☐ $136,510.00

By reason of this order the time of completion will be adjusted as follows: 0 days

Submitted by

Signature	Resident Engineer	Date
	BILL CASEY	4-2-08

Approval Recommended by

Signature	Area Construction Manager	Date
	DENNIS TURCHON	4/4/08

Engineer Approval by

Signature	Area Construction Manager	Date
Michael Foun	DENNIS TURCHON	4-10-08

We the undersigned contractor, have given careful consideration to the change proposed and agree, if this proposal is approved, that we will provide all equipment, furnish the materials, except as may otherwise be noted above, and perform all services necessary for the work above specified, and will accept as full payment therefor the prices shown above.

NOTE: If you, the contractor, do not sign acceptance of this order, your attention is directed to the requirements of the specifications as to proceeding with the ordered work and filing a written protest within the time therein specified.

Contractor Acceptance by

Signature	(Print name and title)	Date
	DANIEL E. Homick, PRESIDENT	4/09/08

STATE OF CALIFORNIA - DEPARTMENT OF TRANSPORTATION

CONTRACT CHANGE ORDER MEMORANDUM

TO: MIKE FORNER / DENNIS TURCHON

FROM: BILL CASEY

FILE: E.A. 04 - 0120R4
CO-RTE-PM SF-80-12.6/13.2
FED. NO. ACBRIM-080-1(097)N

CCO#: **130** | SUPPLEMENT#: **0** | Category Code: **AXZZ**

CONTINGENCY BALANCE (incl. this change) **$46,206,427.12**

COST: **$136,510.00** INCREASE ☑ DECREASE ☐

HEADQUARTERS APPROVAL REQUIRED? ☑ YES ☐ NO

SUPPLEMENTAL FUNDS PROVIDED: **$0.00**

IS THIS REQUEST IN ACCORDANCE WITH ENVIRONMENTAL DOCUMENTS? ☑ YES ☐ NO

CCO DESCRIPTION:
Project Retention

PROJECT DESCRIPTION:
CONSTRUCT ROUTE 80 TEMP BYPASS STRUCTURE

Original Contract Time:	Time Adj. This Change:	Previously Approved CCO Time Adjustments:	Percentage Time Adjusted: (including this change)	Total # of Unreconciled Deferred Time CCO(s): (including this change)
475 Day(s)	0 Day(s)	1195 Day(s)	252 %	7

THIS CHANGE ORDER PROVIDES FOR:

Compensation to the contractor to account for the non-contractual retention of funds withheld on the monthly progress pay estimates with a credit provided to the Department upon the release of these withheld funds.

Section 5-1.25 "Payments" of the contract Special Provisions specify that the third and forth paragraph of Section 9-1.06 "Partial Payments" of the contract Standard Specifications shall not apply. These paragraphs pertain to the retention of 10% to 5% of the estimated value of work done or value of materials to have been furnished and delivered to the project. It was the intent of the Special Provisions that this retention would not apply to this contract.

This contractual provision was not enacted into the project's monthly progress pay estimates and retention has been withheld on these estimates over the first 4 years of the contract. This non-contractual retention of funds has recently been discovered and attempts have been made to have all withheld funds released and to eliminate the retention on future progress pay estimates. These efforts have, however, been unsuccessful due to technical issues with the Department's payment system software. This change order shall provide compensation for both the previous taken project retentions and anticipated retentions on future pay estimates in order to release these non-contractually withheld funds in a timely manner.

Through the February 2008 Progress Pay Estimate, the Department has withheld $7,023,151.63 in project retention representing 5% of the value of work paid. This change order shall immediately provide compensation equal to these withheld funds. Additional compensation shall be provided on a monthly basis equal to the retention withheld of each subsequent monthly pay estimate. Upon the release of these retained funds, this change order shall provide a credit to the Department equal to the amount of the released funds. Once all retained funds are released, the compensation and the credit provided under this change shall result in no cost to the Department.

Failure to provide the compensation specified under this change order shall result in considerable interest cost to the Department. At the current amount of $7,023,151.63 in project retention, interest will accrue at a rate of over $35,000 per month, which will increase as additional funds are retained each month. The estimated final cost could exceed $2,000,000 in interest for both past and future withheld retention. This change order provides compensation of $136,510.00 for interest cost over the 4 month period from the December 2007 Progress Payment to the April 2008 Progress Payment at a 6% annual rate. The compensation provided reflects interest costs from approximately 1 month after the contractor requested the release of retention in November 2007 to the April 2008 Progress Payment when it is anticipated that this change order will act to release those retained funds.

Compensation shall be provided as an adjustment of compensation at a lump sum of $22,110,000, which represents 5% of the current approved contract allotment of $442,200,000. An additional adjustment of compensation shall provide a credit to the Department at an equal lump sum of $22,110,000. Upon the release of all retained funds, each lump sum shall be paid in full resulting in no cost to the Department. Compensation for interest costs through the April 2008 Progress Payment shall be paid as an adjustment of compensation at an agreed lump sum of $136,510.00. The net change order cost of $136,510.00 shall be financed from the contract's contingency funds. A cost estimate is on file.

No adjustment of contract time is warranted as this is an administrative change and will not affect the controlling operation.

Maintenance concurrence is not required as this is an administrative change and will not affect any permanent roadway features.

ADA Notice: For individuals with sensory disabilities, this document is available in alternate formats. For information call: (916) 654-6410 or TDD (916) 654-3880 or write

CONCURRED BY:			
Construction Engineer:		Date	
Bridge Engineer:		Date	
Project Engineer:		Date	
Project Manager:	Alec Melkonians	Date	3/27/08
FHWA Rep.:		Date	
Environmental:		Date	
Other (specify):	Robert Kobal, HQ Asst.Const.Coor	Date	3/28/08
Other (specify):		Date	
District Prior Approval By:		Date	
HQ (Issue Approve) By:	Ken Darby, HQ CCO Engineer	Date	4/1/08
Resident Engineer's Signature:		Date	
			4-2-08

ESTIMATE OF COST

	THIS REQUEST	TOTAL TO DATE
ITEMS	$0.00	$0.00
FORCE ACCOUNT	$0.00	$0.00
AGREED PRICE	$0.00	$0.00
ADJUSTMENT	$136,510.00	$136,510.00
TOTAL	$136,510.00	$136,510.00

FEDERAL PARTICIPATION

☐ PARTICIPATING ☐ PARTICIPATING IN PART ☐ NONE
☐ NON-PARTICIPATING (MAINTENANCE) ☑ NON-PARTICIPATING

FEDERAL SEGREGATION (if more than one Funding Source or P.I.P. type)
☑ CCO FUNDED PER CONTRACT ☐ CCO FUNDED AS FOLLOWS

FEDERAL FUNDING SOURCE	PERCENT

ADA Notice: For individuals with sensory disabilities, this document is available in alternate formats. For information call: (916) 654-6410 or TDD (916) 654-3880 or write

CONTRACT CHANGE ORDER

Change Requested by: Engineer

CCO 131	Suppl. No. 0	Contract No. 04 - 0120R4	Road SF-80-12.6/13.2	FED. AID LOC.: ACBRIM-080-1(097)N

To: **CC MYERS INC**

You are directed to make the following changes from the plans and specifications or do the following described work not included in the plans and specifications for this contract. ***NOTE: This change order is not effective until approved by the Engineer.***

Description of work to be done, estimate of quantities and prices to be paid. (Segregate between additional work at contract price, agreed price and force account.) Unless otherwise stated, rates for rental of equipment cover only such time as equipment is actually used and no allowance will be made for idle time. This last percentage shown is the net accumulated increase or decrease from the original quantity in the Engineer's Estimate.

Estimate of Decrease in Contract Item at Contract Price:

Item No. 46: EROSION CONTROL (NETTING)						
-5220 M2	(-100.00%)	$5.50	/M2	=	-$28,710.00	(-100.00%)
Item No. 47: STRAW (EROSION CONTROL)						
-5.2 TONN	(-100.00%)	$425.00	/TONN	=	-$2,210.00	(-100.00%)
Item No. 48: FIBER (EROSION CONTROL)						
-1444.55 KG	(-96.95%)	$1.00	/KG	=	-$1,444.55	(-96.95%)
Item No. 49: EROSION CONTROL (TYPE B)						
-2150 M2	(-100.00%)	$5.00	/M2	=	-$10,750.00	(-100.00%)
Item No. 50: FIBER ROLLS						
-1520 M	(-100.00%)	$15.00	/M	=	-$22,800.00	(-100.00%)
Item No. 51: COMPOST (EROSION CONTROL)						
-4403.18 KG	(-97.63%)	$1.00	/KG	=	-$4,403.18	(-97.63%)
Item No. 52: MOVE-IN/MOVE-OUT (EROSION CONTROL)						
-5 EA	(-71.43%)	$1,000.00	/EA	=	-$5,000.00	(-71.43%)
Item No. 54: STABILIZING EMULSION (EROSION CONTROL)						
-332.05 KG	(-97.66%)	$3.50	/KG	=	-$1,162.18	(-97.66%)

Total Cost for Decrease in Contract Item.....($76,479.91)

Extra Work at Lump Sum:

Compensate the Contractor for the erosion control work performed at the East Side of the USCG Captain's Hillcrest acces road.

For this work, the Contractor shall be compensated at a lump sum price of $1,978.00. This sum constitutes full and final compensation of your request for compensation as stated in your Document No. 215-STL.00401 dated July 29, 2008, including markups, for all costs associated with the work of this change.

Total Cost of Extra Work at Lump Sum $1,978.00

In accordance with Section 4-1.03B(3), "Eliminated Items," of the Standard Specifications, the adjustment due to the elimination of Item No. 46, Erosion Control (Netting), Item No. 47, Straw (Erosion Control), Item No. 49, Erosion Control (Type B), and Item No. 50, Fiber Rolls, are zero.

No adjustment to the contract unit price of Item No. 48, Fiber (Erosion Control), Item No. 51, Compost (Erosion Control), Item No. 52, Move-In/Move-Out (Erosion Control), and Item No. 54 Stabilizing Emulsion (Erosion Control) will be made in accordance with Section 4-1.03B(2), "Decrease of More Than 25 Percent," of the Standard Specifications.

CONTRACT CHANGE ORDER

Change Requested by: Engineer

CCO 131	Suppl. No. 0	Contract No. 04 - 0120R4	Road SF-80-12.6/13.2	FED. AID LOC.: ACBRIM-080-1(097)N

Estimated Cost: Increase ☐ Decrease ☑ **($74,501.91)**

By reason of this order the time of completion will be adjusted as follows: 0 days

Submitted by

Signature	Resident Engineer	Date
	BILL CASEY	3-6-09

Approval Recommended by

Signature	Area Construction Manager	Date
Deanna Vilcheck	DEANNA VILCHECK	3/9/09

Engineer Approval by

Signature	Area Construction Manager	Date
Deanna Vilcheck	DEANNA VILCHECK	5/6/09

We the undersigned contractor, have given careful consideration to the change proposed and agree, if this proposal is approved, that we will provide all equipment, furnish the materials, except as may otherwise be noted above, and perform all services necessary for the work above specified, and will accept as full payment therefor the prices shown above.

NOTE: If you, the contractor, do not sign acceptance of this order, your attention is directed to the requirements of the specifications as to proceeding with the ordered work and filing a written protest within the time therein specified.

Contractor Acceptance by

Signature	(Print name and title)	Date
	DANIEL E. HIMICK, PRESIDENT	5/01/09

STATE OF CALIFORNIA - DEPARTMENT OF TRANSPORTATION

CONTRACT CHANGE ORDER MEMORANDUM

DATE: 10/2/2008

TO: MIKE FORNER / DEANNA VILCHECK	FILE: E.A. 04 - 0120R4
FROM: BILL CASEY	CO-RTE-PM SF-80-12.6/13.2
	FED. NO. ACBRIM-080-1(097)N
CCO#: 131 SUPPLEMENT#: 0 Category Code: CDPF	CONTINGENCY BALANCE (incl. this change) $71,223,345.05
COST: ($74,501.91) INCREASE ☐ DECREASE ☑	HEADQUARTERS APPROVAL REQUIRED? ☐ YES ☑ NO
SUPPLEMENTAL FUNDS PROVIDED: $0.00	IS THIS REQUEST IN ACCORDANCE WITH ENVIRONMENTAL DOCUMENTS? ☑ YES ☐ NO
CCO DESCRIPTION: Permanent Erosion Control	PROJECT DESCRIPTION: CONSTRUCT ROUTE 80 TEMP BYPASS STRUCTURE

Original Contract Time:	Time Adj. This Change:	Previously Approved CCO Time Adjustments:	Percentage Time Adjusted: (including this change)	Total # of Unreconciled Deferred Time CCO(s): (including this change)
475 Day(s)	0 Day(s)	1195 Day(s)	252 %	7

THIS CHANGE ORDER PROVIDES FOR:

Compensate the Contractor for erosion control measures within the project limits.

This project, the Temporary Bypass Structure (TBS), was awarded in March 2004 to construct a detour that will allow for the tie in of the new east span of the San Francisco Oakland Bay Bridge to Yerba Buena Island. The TBS encompasses three main structures, the East Tie-In to the existing bridge, the West Tie-In (WTI) to Yerba Buena Island, and the Viaduct structure between the two tie ins.

Two separate Department strategy memorandums, issued on December 14, 2006 and December 25, 2006, and approved by Tony Anziano - Toll Bridge Program Manager, Richard Land - Chief Engineer, and the Toll Bridge Program Oversight Committee (TBPOC), resulted in various Department-directed changes to the project scope of work. These changes made various contract pay items related to erosion control work no longer applicable.

This change order will resolved the Contractor's request for compensation as stated in their Letter No. 215-STL.00401 dated July 29, 2008 and will closeout various contract pay items that were no longer applicable due to the Department's strategy memorandums implemented on this contract.

The Contractor will be compensated at a lump sum price of $ 1,978.00 and decrease in contract pay items (- $ 76,479.91), with a total net decrease cost of (- $74,501.91), which can be financed from the contract's contingency funds. A cost analysis is on file. 1 RA 5/7/09

No adjustment of contract time is warranted, as the work will not affect the controlling operation.

Hong Wong - Project Engineer and Alec Melkonians - Asst. Project Manager concurred with this change.

Maintenance concurrence is not required since it does not affect any permanent roadway features.

ADA Notice: For individuals with sensory disabilities, this document is available in alternate formats. For information call: (916) 654-6410 or TDD (916) 654-3880 or write Records and Forms Management, 1120 N Street, MS-89, Sacramento, CA 95814.

CONCURRED BY:		
Construction Engineer:	Robert Kobal - Sr. TE	Date 12/23/08
Bridge Engineer:		Date
Project Engineer:	Hong Wong, PE	Date 12/18/08
Project Manager:	Alec Melkonians	Date 12/12/08
FHWA Rep.:		Date
Environmental:		Date
Other (specify):		Date
Other (specify):		Date
District Prior Approval By:		Date
HQ (Issue .Approve) By:		Date
Resident Engineer's Signature:		Date 3-6-09

ESTIMATE OF COST

	THIS REQUEST	TOTAL TO DATE
ITEMS	($76,479.91)	($76,479.91)
FORCE ACCOUNT	$0.00	$0.00
AGREED PRICE	$1,978.00	$1,978.00
ADJUSTMENT	$0.00	$0.00
TOTAL	($74,501.91)	($74,501.91)

FEDERAL PARTICIPATION

☐ PARTICIPATING ☐ PARTICIPATING IN PART ☑ NONE
☐ NON-PARTICIPATING (MAINTENANCE) ☐ NON-PARTICIPATING

FEDERAL SEGREGATION (if more than one Funding Source or P.I.P. type)
☐ CCO FUNDED PER CONTRACT ☐ CCO FUNDED AS FOLLOWS

FEDERAL FUNDING SOURCE	PERCENT

ADA Notice: For individuals with sensory disabilities, this document is available in alternate formats. For information call: (916) 654-6410 or TDD (916) 654-3880 or write Records and Forms Management, 1120 N Street, MS-89, Sacramento, CA 95814.

CONTRACT CHANGE ORDER

Change Requested by: ENGINEER

CCO 132	Suppl. No. 0	Contract No. 04 - 0120R4	Road SF-80-12.6/13.2	FED. AID LOC.: ACBRIM-080-1(097)N

To: **CC MYERS INC**

You are directed to make the following changes from the plans and specifications or do the following described work not included in the plans and specifications for this contract. ***NOTE: This change order is not effective until approved by the Engineer.***

Description of work to be done, estimate of quantities and prices to be paid. (Segregate between additional work at contract price, agreed price and force account.) Unless otherwise stated, rates for rental of equipment cover only such time as equipment is actually used and no allowance will be made for idle time. This last percentage shown is the net accumulated increase or decrease from the original quantity in the Engineer's Estimate.

Adjustment of Compensation at Lump Sum:

Compensate the Contractor for slide cleanup work on the slope under span 48 of the viaduct caused by a 2006 New Years day weekend storm.

For this work, Contractor agrees to accept a lump sum of $23,870.00. This sum constitutes full and final compensation for all costs including all markups, for the work of this change.

This change order resolves all outstanding costs associated with the Notice of Potential Claim dated February 22, 2006 and March 2, 2006 and no additional compensation shall be paid.

Total cost of Adjustment of Compensation at Lump Sum $23,870.00

Any restoration work, if required, on the slope under span 48 will be paid for in a separate contract change order.

Estimated Cost: **Increase** ☑ **Decrease** ☐ **$23,870.00**

By reason of this order the time of completion will be adjusted as follows: 0 days

Submitted by

Signature	Resident Engineer	Date
	BILL CASEY	4-17-08

Approval Recommended by

Signature	Area Construction Manager	Date
	DENNIS TURCHON	4/15/08

Engineer Approval by

Signature	Area Construction Manager	Date
	DENNIS TURCHON	5/5/08

We the undersigned contractor, have given careful consideration to the change proposed and agree, if this proposal is approved, that we will provide all equipment, furnish the materials, except as may otherwise be noted above, and perform all services necessary for the work above specified, and will accept as full payment therefor the prices shown above.

NOTE: If you, the contractor, do not sign acceptance of this order, your attention is directed to the requirements of the specifications as to proceeding with the ordered work and filing a written protest within the time therein specified.

Contractor Acceptance by

Signature	(Print name and title)	Date
	DEWEY C. LEE JR. Contract Manager	4/21/08

STATE OF CALIFORNIA - DEPARTMENT OF TRANSPORTATION

CONTRACT CHANGE ORDER MEMORANDUM

RECEIVED
DATE: 4/9/2008 Page 1 of 1

TO: MIKE FORNER / DENNIS TURCHON	FILE: E.A. 04 - 0120R4 007654 JUN 20 08
FROM: BILL CASEY	CO-RTE-PM SF-80-12.6/13.2
	FED. NO. ACBRIM-080-1(097)N
CCO#: 132 SUPPLEMENT#: 0 Category Code: ENCB	CONTINGENCY BALANCE (incl. this change) $45,332,557.12
COST: $23,870.00 INCREASE ☑ DECREASE ☐	HEADQUARTERS APPROVAL REQUIRED? ☐ YES ☑ NO
SUPPLEMENTAL FUNDS PROVIDED: $0.00	IS THIS REQUEST IN ACCORDANCE WITH ENVIRONMENTAL DOCUMENTS? ☑ YES ☐ NO
CCO DESCRIPTION: NOPC 17 Settlement	PROJECT DESCRIPTION: CONSTRUCT ROUTE 80 TEMP BYPASS STRUCTURE

Original Contract Time:	Time Adj. This Change:	Previously Approved CCO Time Adjustments:	Percentage Time Adjusted: (including this change)	Total # of Unreconciled Deferred Time CCO(s): (including this change)
475 Day(s)	0 Day(s)	1195 Day(s)	252 %	7

THIS CHANGE ORDER PROVIDES FOR:

resolution of outstanding costs for Notice of Potential Claim No. 17 dated February 22, 2006 and March 2, 2006.

This change order compensates the Contractor for slide cleanup work on the slope under span 48 of the viaduct structure caused by a 2006 New Years day weekend storm. The project site experienced a storm event that cause damage to the slope between Southgate road and the old USCG access road. Cleanup work was performed to restore the slope and to provide stable work areas. The original contract completion date was July 27, 2005, but due to numerous Department delays and temporary suspensions prior to the storm event, the project completion date was extended into the 2005/2006 winter. The extension of the contract created a significant weight in the merit analysis of the NOPC, thus making it a compensable potential claim.

The Contractor shall be compensated at an Adjustment of Compensation at Lump Sum price of $23,870.00, which can be financed by the contract's contingency funds. Records and calculations used to determine the adjustment in compensation are on file in the project records.

There will be no time adjustment by reason of this change since it does not affect the controlling operation.

This change was concurred by Alec Melkonians - Asst. Project Manager and Patrick Treacy - HQ Assistant Construction Coordinator.

Design concurrence is not required as this change does not affect the design of the project. Maintenance concurrence is not required since it does not affect any permanent roadway features.

CONCURRED BY:		
Construction Engineer:	BILL CASEY	Date 4/14/08
Bridge Engineer:		Date
Project Engineer:		Date
Project Manager:	Alec Melkonians	Date 4/11/08
FHWA Rep.:		Date
Environmental:		Date
Other (specify):	Patrick Treacy, HQ Asst.Const.Co	Date 4/10/08
Other (specify):		Date
District Prior Approval By:		Date
HQ (Issue .Approve) By:		Date
Resident Engineer's Signature:		Date 4-14-08

ESTIMATE OF COST

	THIS REQUEST	TOTAL TO DATE
ITEMS	$0.00	$0.00
FORCE ACCOUNT	$0.00	$0.00
AGREED PRICE	$0.00	$0.00
ADJUSTMENT	$23,870.00	$23,870.00
TOTAL	$23,870.00	$23,870.00

FEDERAL PARTICIPATION

☐ PARTICIPATING ☐ PARTICIPATING IN PART ☐ NONE
☐ NON-PARTICIPATING (MAINTENANCE) ☒ NON-PARTICIPATING

FEDERAL SEGREGATION (if more than one Funding Source or P.I.P. type)
☑ CCO FUNDED PER CONTRACT ☐ CCO FUNDED AS FOLLOWS

FEDERAL FUNDING SOURCE	PERCENT

ADA Notice: For individuals with sensory disabilities, this document is available in alternate formats. For information call: (916) 654-6410 or TDD (916) 654-3880 or write Records and Forms Management, 1120 N Street, MS-89, Sacramento, CA 95814.

CONTRACT CHANGE ORDER

Change Requested by: Contractor

CCO 133 | Suppl. No. 0 | Contract No. 04 - 0120R4 | Road SF-80-12.6/13.2 | FED. AID LOC.: ACBRIM-080-1(097)N

To: CC MYERS INC

You are directed to make the following changes from the plans and specifications or do the following described work not included in the plans and specifications for this contract. ***NOTE: This change order is not effective until approved by the Engineer.***

Description of work to be done, estimate of quantities and prices to be paid. (Segregate between additional work at contract price, agreed price and force account.) Unless otherwise stated, rates for rental of equipment cover only such time as equipment is actually used and no allowance will be made for idle time. This last percentage shown is the net accumulated increase or decrease from the original quantity in the Engineer's Estimate.

Adjustment of Compensation at Lump Sum:

In accordance with Contract Special Provisions Section 5-1.14, "Contractor's Design", revise the first sentence of the eighth paragraph in the "Lightweight Concrete" subsection of Section 10-5.07, "Concrete Structures" of the Supplemental Technical Special Provision as per Sheet 2 of this contract change order.

The Contractor has agreed to the terms and condition of this change order at no cost to the State. This sum constitutes full compensation, including markups for this change. Any additional work or related costs to this change shall be born by the Contractor.

Total Cost of Adjustment of Compensation at Agreed Lump Sum.....$0.00

Estimated Cost: **Increase** ☐ **Decrease** ☐ **$0.00**

By reason of this order the time of completion will be adjusted as follows: 0 days

Submitted by

Signature	Resident Engineer	Date
	BILL CASEY	8-13-08

Approval Recommended by

Signature	Area Construction Manager	Date
Deanna Vilcheck	DEANNA VILCHECK	8/14/08

Engineer Approval by

Signature	Area Construction Manager	Date
Deanna Vilcheck	DEANNA VILCHECK	9/12/08

We the undersigned contractor, have given careful consideration to the change proposed and agree, if this proposal is approved, that we will provide all equipment, furnish the materials, except as may otherwise be noted above, and perform all services necessary for the work above specified, and will accept as full payment therefor the prices shown above.

NOTE: If you, the contractor, do not sign acceptance of this order, your attention is directed to the requirements of the specifications as to proceeding with the ordered work and filing a written protest within the time therein specified.

Contractor Acceptance by

Signature	(Print name and title)	Date
Dewey C Lee, Jr	DEWEY C. LEE JR. Contract Manager	8/28/08

In the "Lightweight Concrete" subsection of Section 10-5.07, "CONCRETE STRUCTURES," of the October 9, 2006, FINAL STRUCTURES SUPPLEMENTAL TECHNICAL SPECIAL PROVISIONS, for EA. NUMBER: 04-0120R4; 04-SF-80-12.6/13.2, Temporary Bypass Structure/South-South Detour for the San Francisco-Oakland Bay Bridge Temporary Bypass Structure, Bridge Number 34-0006 (TEMP), FINAL VIADUCT SEGMENT RE-SUBMITTAL CCO #50, the first sentence in the eighth paragraph (page 23) is revised as follows:

The air-dry unit mass of lightweight concrete furnished for each mix design used shall be a single mass, selected by the Contractor, within the limits of 1750 kg to 1840 kg per cubic meter for concrete which is to be prestressed, and within the limits of 1670 kg to 1840~~1760~~ kg per cubic meter for non-prestressed concrete.

This Amendment to the Supplemental Technical Special Provisions contained above has been prepared by or under the direction of the following Registered Person.

STRUCTURES

Edward L. Tyk 2/11/08

Edward L. Tyk, P.E.; Registration Expires December 31, 2009

TRC
10680 White Rock Road, Suite 100
Rancho Cordova, CA 95670-6165
etyk@trcsolutions.com
916/366-0632

CONTRACT NO. 04-0120R4

CONTRACT CHANGE ORDER NO 133

SHEET 2 OF 2

CONTRACT CHANGE ORDER

Change Requested by: Engineer

CCO 134	Suppl. No. 0	Contract No. 04 - 0120R4	Road SF-80-12.6/13.2	FED. AID LOC.: ACBRIM-080-1(097)N

To: **CC MYERS INC**

You are directed to make the following changes from the plans and specifications or do the following described work not included in the plans and specifications for this contract. ***NOTE: This change order is not effective until approved by the Engineer.***

Description of work to be done, estimate of quantities and prices to be paid. (Segregate between additional work at contract price, agreed price and force account.) Unless otherwise stated, rates for rental of equipment cover only such time as equipment is actually used and no allowance will be made for idle time. This last percentage shown is the net accumulated increase or decrease from the original quantity in the Engineer's Estimate.

Estimate of Decrease in Contract Item at Contract Price:

Item No. 78: ELECTRICAL WORK (STAGE 2)
-1 LS (-100.00%) 1,000,000.00 /LS = -$1,000,000.00 (-100.00%)

Total Cost for Decrease in Contract Item.....($1,000,000.00)

In accordance with Section 4-1.03B(3), "Eliminated Items," of the Standard Specifications, the adjustment due to the elimination of Item No. 78, Electrical Work (Stage 2), is zero.

RECEIVED
JUL 27 '09
010800

Extra Work at Lump Sum:

As authorized by the Engineer and as shown on Sheets 2 to 94 of this change order, perform all electrical work at the Temporary Bypass Structure (TBS) pursuant to the following Special Provisions:

All work in the Viaduct and West Tie-In of the Temporary Bypass Structure shall comply with Section 10-3, Electrical Work, of the Contract Special Provisions, with the exception of Electrical work under Stage 2 as reflected in Sheets 2 to 3 of 94 of this change.

All work in the East Tie-In of the Temporary Bypass Structure shall comply with the provisions in Sheets 4 to 16 of 94 of this change.

For this work, the contractor will be paid the sum of $ 3,300,924.00, which constitutes full compensation, including materials, labor, incidentals, and markups, for this change.

Total Cost of Extra Work at Lump Sum $3,300,924.00

Estimated Cost: **Increase** ☑ **Decrease** ☐ **$2,300,924.00**

By reason of this order the time of completion will be adjusted as follows: 0 days

Submitted by		
Signature	**Resident Engineer** BILL CASEY	**Date** 7-3-09
Approval Recommended by		
Signature Michael Fonner	**SFOBB Construction Manager** MIKE FORNER	**Date** 7-6-09
Engineer Approval by		
Signature Mike Fonner	**SFOBB Construction Manager** MIKE FORNER	**Date** 7-29-09

We the undersigned contractor, have given careful consideration to the change proposed and agree, if this proposal is approved, that we will provide all equipment, furnish the materials, except as may otherwise be noted above, and perform all services necessary for the work above specified, and will accept as full payment therefor the prices shown above.

NOTE: If you, the contractor, do not sign acceptance of this order, your attention is directed to the requirements of the specifications as to proceeding with the ordered work and filing a written protest within the time therein specified.

Contractor Acceptance by		
Signature Daniel E Himick	**(Print name and title)** DANIEL E HIMICK, PRESIDENT	**Date** 7/24/09

CONTRACT SPECIALS WITH ADDENDA

SECTION 10-2. (BLANK)

SECTION 10-3. ELECTRICAL WORK

10-3.01 DESCRIPTION (Altered significantly via Add#5, Add #9)

The following electrical work shall conform to the provisions in Section 86, "Signals, Lighting and Electrical Systems," of the Standard Specifications and these special provisions:

LIGHTING SYSTEM DESIGN

Lighting system design shall include but not limited to the following:

The Contractor shall design a lighting system for the westbound and eastbound Temporary Bypass Structure (TBS) per Caltrans Lighting Standard. Lighting fixtures on westbound shall be mounted on the pole as shown on ES-6A of Standard Plans. Lighting fixtures on eastbound shall be pendant soffit mounted as shown on ES-9E. Attention is directed to "Contractor's Design" of these special provisions. Lighting shall be designed to minimize glare to the motorists, the new lighting fixtures shall be similar to the existing (such as type, voltage input, and lamp wattage). Minimum illumination level of 1.5 lux shall be maintained along edge of travel way across the structure in addition to illumination level requirements at connection points. The lighting system will be 480 V, 3-phase. The wire size for the lighting circuit shall be 3/C #6+G AWG armored for each light circuit.

The Contractor shall submit to the Engineer all design drawings, engineering calculations (illumination levels) and estimate for approval. The Engineer will be allowed at least 15 working days for the review of the approval documents.

~~ELECTRICAL WORK (Stage 2)~~

This work shall include but not limited to intercepting all eastbound circuits to the east of vault No.5, route the circuits to vault No. 2 and splice or terminate to the existing splice/terminal boxes as shown on the plans. The following circuits shall be intercepted:

1. Install 15 kV splice box at approximately Sta. 55+80. Intercept existing 12.47 kV cable, splice to temporary armored cable and reroute to a splice box in vault No. 2 as shown on the plans. Splice the 12.47 kV armored cable to the existing 12.47 kV cable in vault No.2.
2. Locate existing DC terminal box on the bridge, install and terminate new 40/C No. 14 armored cable and reroute to a terminal box in vault No.-2 as shown on the plans. Terminate the 40/C armored cable to the terminal box in vault No. 2. The terminal box will be supplied and installed by others.
3. Locate existing RTU/Telephone communication terminal box on the bridge, install and terminate new 50 pairs, No. 18 AWG, armored cable and reroute to a terminal box in vault No. 2 as shown on the plans. Terminate the 50 pairs armored cable to the terminal box in vault No.2. The terminal box will be supplied and installed by others.
4. Locate and intercept traffic operation system circuits as listed on the plans. Install a new TOS terminal box at approximately sta. 56+40. Install and terminate new TOS armored cables and reroute to a terminal box in vault No. 2 as shown on the plans. Terminate TOS armored cables to the terminal box in vault No. 2. The terminal box will be supplied and installed by others.
5. The Contractor shall determine the exact cable routing and location of cable supports and splice boxes.
6. Before completion of all electrical work, the Contractor shall label all conductors and cables by type and circuit number.
7. Install Temporary Bypass roadway lighting poles, pendant soffits and fixtures.
8. Install and terminate new armored cable lighting circuits from the light fixtures to the terminal box in vault No. 2.
9. Conduct cable continuity and insulation tests on all circuits.
10. Conduct cable continuity test and functional test on all new lighting circuits.
11. Install and terminate cable itemized under "Cost Break-down" elsewhere in these special provisions.
12. Install 8 new State-furnished wireless solar powered call boxes and replace 4 existing outdated call boxes with 4 new solar powered call boxes.

REGISTERED PROFESSIONAL ENGINEER CHEUK HONG WONG C 60145 EXP. 6/30/10 CIVIL STATE OF CALIFORNIA

CONTRACT NO. 04-0120R4

CONTRACT CHANGE ORDER NO 134

94

13. Locate existing 96 VDC terminal boxes on the bridge, splice and route the armored cables to a terminal box in vault No. 2. The terminal box will be supplied and installed by others.
14. Install one 3/C #6+G, 480 V armored cable for the new exit sign. Route the armored cable to a terminal box in vault No.2 as shown on the plans. Terminate the armored cable to the terminal box. The terminal box will be supplied and installed by others. .
15. Install and terminate cables as shown on the plans and cable schedule.
16. Install 47 new NEMA 4 splice boxes.
17. Install approximately 200 meters of 41C galvanized rigid steel (GRS) conduit.
18. Install and splice approximately 270 meters of 27C liquid tight flexible conduit with 3/C #10+ G.
19. Install and splice approximately 367 meters of 3-1/C #6 + #8G.
20. Remove all existing conduits, signal lights, Tesco flex control panel, splice boxes, receptacles/utility outlets and call boxes that are no longer required and shall become the property of the Contractor.
21. Install and terminate armored cables as shown on the cable schedule.
22. Conduct cable continuity and insulation tests on all circuits.
23. Conduct functional test on all lighting circuits
24. Remove all existing conduit and splice boxes on the North side of the longitudinal girder as shown on the plan.
25. Replace existing call boxes with new State furnished wireless solar powered call boxes.
26. Install new splice boxes, rigid steel galvanized conduit and liquid tight flexible conduit as shown on the plans.
27. Perform cable continuity and insulation tests.
28. Conduct functional test on call boxes and lighting circuits.

REGISTERED PROFESSIONAL ENGINEER
CHEUK MONG WONG
C 60145
EXP. 6/30/10
CIVIL
STATE OF CALIFORNIA

10-3.02 COST BREAK-DOWN

Cost break-downs shall conform to the provisions in Section 86-1.03, "Cost Break-Down," of the Standard Specifications and these special provisions.

The Engineer shall be furnished a cost break-down for each contract lump sum item of work described in this Section 10-3.

The cost break-down shall be submitted to the Engineer for approval within 30 days after the contract has been approved. The cost break-down shall be approved, in writing, by the Engineer before any partial payment for the items of electrical work will be made.

The cost break-down for the Electrical Work (Stage 2) shall be broken down, as a minimum, to include the following listed items in addition to those listed in the Standard Specifications:

Electrical Work (Stage 2). Electrical installation is shown on the plans and shall include, but not be limited to the following additional items of the cost break-down:

1. Cables and cable terminations – list each size and type.
2. Termination boxes, splice boxes pull and junction boxes – list each size and type.
3. Cable anchors, fittings and supports – list each size and type.
4. Equipment required for functional testing – list size and type.
5. Equipment rental – list each over $500.00 – list size and type.
6. Light poles – list size and type.
7. Light fixtures – list size and type.
8. Soffit luminaires – list size and type.
9. Electrical hardware – list size and type.
10. Conduits, conduit anchors, fittings and supports - list each size and type.

10-3.03 MAINTAINING EXISTING AND TEMPORARY ELECTRICAL SYSTEMS

The Contractor shall visit the site of the proposed routing of cables and base his bids from site examination and estimate. The Contractor shall study the contract documents included under this contract to determine

CONTRACT NO. 04-0120R4

DESIGN OVERSIGHT	REGISTRATION NO.	DATE
C. Hong Wong		

Approved as to impact on State facilities and conformance with applicable State standards and practices and that technical oversight was performed as described in the California Department of Transportation A & E Consultant Services Manual.

The special provisions contained herein have been prepared by or under the direction of the following Registered Persons.

ELECTRICAL _____

REGISTERED ELECTRICAL ENGINEER

REGISTERED PROFESSIONAL ENGINEER
CAROL LIGHT
No. 10145
Exp. 9/30/10
ELECTRICAL
STATE OF CALIFORNIA

SECTION 10-3. SIGNALS, LIGHTING AND ELECTRICAL SYSTEMS

10-3.01 DESCRIPTION

Traffic signals, flashing beacons, lighting, sign illumination, traffic operation system and call box system shall conform to the provisions in Section 86, "Signals, Lighting and Electrical Systems," of the Standard Specifications and these special provisions:

ELECTRICAL WORK

This work shall include but not limited to intercepting all eastbound circuits to the east of ~~vault No.2A,~~ the ~~Southside Detour Viaduct~~ the Temporary Bypass structure, route the circuits to and through cable tray on Temporary Bypass Structure and the East Tie-in Roll-in Structure. The following circuits shall be intercepted:

Install new relocated RTU #8 cabinet along with **new** service cabinet, contactor/relay cabinet and control cable terminal box at existing pier E1.

2. Disconnect and reroute RTU cable from existing RTU #8 cabinet to new relocated RTU #8 cabinet located on top of existing pier E1 as shown on plans.
3. Disconnect and reroute all existing cables from existing service cabinet and control terminal box to new service cabinet and terminal box at Pier 1 located on top of existing pier E1 as shown on plans.
4. ~~.~~Install new RTU armored cable from existing RTU #8 cabinet to new RTU #8 cabinet at existing Pier E1.
5. Install new armored cable (DC Cable) from existing control terminal box to new control terminal box at existing Pier E1.
6. Install new 480 volt call box main feeder from existing service cabinet to new service cabinet at existing Pier E1.
7. Install new Photoelectric unit (PEU) at new contactor/relay cabinet at existing Pier E1.
8. Connect new cables from East tie-in structure to new RTU #8, service cabinet and contactor/relay terminal box at Pier 1.
9. Splice new 15 KV cable to the existing 15 KV cable on the East span of the existing bridge. Provide new splice box. Extend 15 KV cable in cable tray across East tie-in structure to continue on viaduct structure
10. The Contractor shall determine the exact cable routing and location of cable supports and splice boxes.
11. Before completion of all electrical work, the Contractor shall label all conductors and cables by type and circuit number.
12. Install Temporary Bypass roadway lighting poles and soffit lighting fixtures.
13. Install and terminate new armored cable lighting circuits from the light fixtures to the viaduct structure and on to the East span of the existing bridge.
14. Conduct cable continuity and insulation tests on all circuits.
15. Conduct cable continuity test and functional test on all new lighting circuits.
16. Install and terminate cable itemized under "Cost Break-down" elsewhere in these special provisions.

17. Remove unnecessary wiring per documents when new installation is complete.
18. Install and terminate cables as shown on the plans and cable schedule.
21. Install new NEMA 4 splice boxes.
22. –Provide 47m of 15 KV cable, tested, along with two splice kits.
23. Conduct cable continuity and insulation tests on all circuits.
24. Conduct functional test on all lighting circuits.
25. Conduct functional test on call boxes and lighting circuits.
26. Route G30 ground conductor -across East tie-in structure from the viaduct structure and connect to existing ground conductor on the existing bridge.

10-3.02 COST BREAK-DOWN

Cost break-downs shall conform to the provisions in Section 86-1.03, "Cost Break-Down," of the Standard Specifications and these special provisions.

The Engineer shall be furnished a cost break-down for each contract lump sum item of work described in this Section 10-3.

The cost break-down shall be submitted to the Engineer for approval within 20 days after the contract has been approved. The cost break-down shall be approved, in writing, by the Engineer before any partial payment for the items of electrical work will be made.

The cost break-down for the Electrical Work shall be broken down, as a minimum, to include the following listed items in addition to those listed in the Standard Specifications:

A. Electrical Work: Electrical installation is shown on the plans and shall include, but not be limited to the following additional items of the cost break-down:
   1. Call box installation.
   2. Cables and cable terminations – list each size and type.
   3. Termination boxes, splice boxes, pull and junction boxes – list each size and type.
   4. Cable anchors, fitting and suports – list size and type.
   5. Westbound lighting.
   6. Eastbound lighting.
   7. 12.47 kV power system.
   8. Equipment required for functional testing – list size and type.
   9. Equipment rental – list each over $500.00 – list size and type.
   10. Electrical hardware – list size and type.
   11. Conduits, cable tray, conduit anchors, fittings and supports – list each size and type.

10-3.03 CODES AND STANDARDS

All work performed and material installed or furnished on this contract shall confom to Section 86-1.02 "Regulations and Code," and the following codes and standard to the modifications and additional requirements in these special provisions:

A. California Administrative Code, Title 24, part 3, "Basic Electrical Regulations."
B. National Fire Protection Association Standards
C. All local ordinances.

10-3.__ MAINTAINING EXISTING AND TEMPORARY ELECTRICAL SYSTEMS

The Contractor shall visit the site of the proposed routing of cables and base his bids from site examination and estimate. The Contractor shall study the contract documents included under this contract to determine exactly the extent of the work provided under this contract, as well as to ascertain the difficulty to be encountered in the performing the work. Continuous operation of the bridge shall be required while rerouting and splicing of the existing circuits are being performed. Outages required for construction purposes shall be scheduled for the shortest practical periods of time, in coordination with the Engineer. No outages or shutdowns of service shall occur without the written authorization of the Engineer.

Before commencing the work, the Contractor shall submit in writing to the Engineer a description and detailed schedule of the intended operations relative to keeping the bridge east and west spans lighting systems in continuous operation. Such schedule shall be part of the progress schedule.

Regardless of construction procedure, methods and equipment selected, the Contractor shall have all materials and equipment on the site for the installation of the electrical system prior to commencement of work. Disconnection of existing or temporary lighting or electrical systems will not be permitted until the new cables have been properly installed and tested.

The Contractor shall provide any and all necessary temporary materials as required to keep any and all electrical facilities in continuous operation. The Contractor shall be responsible for coordinating all electrical work with all other Contractors, State forces agencies, and local entities with jurisdiction. Where damage to facilities is caused by the Contractor's operations, the Contractor shall, at the Contractor's expense, repair or replace the damaged facilities promptly in accordance with the Standard Specifications. If the Contractor fails to complete the repairs, the repairs will be made by the State agencies at the Contractor's expense.

Full compensation for temporary facilities shall be considered as included in the contract lump sum prices paid for the various contract items of work involved and no additional compensation will be allowed.

10-3.05 CONDUIT

All conduit installed shall be Type 2 unless otherwise specified.

RIGID GALVANIZED STEEL CONDUIT, THREADED COUPLINGS AND ELBOWS

The rigid galvanized steel (RGS) conduit, threaded couplings, and elbows shall conform to Section 86-2.05, "Conduit," of the Standard Specifications for Type 1 where shown on the plans.

LIQUIDTIGHT FLEXIBLE METAL CONDUIT

The liquid tight flexible metallic conduit shall conform to the following requirements:

A. The flexible metal shall be constructed of continuously interlocked strip and shall be coated with sunlight resistant PVC jacket.

B. The metal core shall be hot-dipped galvanized steel core with a heavy coating of zinc.
C. The jacket shall be resistant to weather, temperature, oil and chemical breakdown.
D. Conform to the provisions of NEC Article 351 under "Liquid-tight Flexible Metal Conduit".
E. UL listed for Safety 360.

10-3.06 SUPPORT HARDWARE FOR CONDUITS AND CABLES

STAINLESS STEEL POWER-STUD ANCHOR-THREADED VERSION

All electrical items that use anchors to attach to the concrete structures shall use stainless steel power stud anchor-threaded version.

Stainless steel power-stud, anchor-threaded version shall have a one-piece anchor body with the length identification code. The anchor bodies shall be manufactured from Type 316 stainless steel and shall have an expansion mechanism, which consists of a pair of interlocking independent wedges.

Anchors that have less than a 40 mm hole depth can be installed anywhere in the box. If the anchor will require a hole depth of greater than 40 mm, the Engineer will consult with the Structural Engineer of Record prior to approving the location and depth of the anchor. The f"c for the superstructure is 55 Mpa. The average strength of the concrete will therefor be almost 62 MPa. As a consequence it will be difficult to drill.

Anchor Component	Component Material
Anchor Body	Type 316L Stainless Steel
Nut	Type 316L Stainless Steel
Washer	Type 316L Stainless Steel
Expansion Wedge	Type 316L Stainless Steel

ELECTRICAL HARDWARE

All electrical hardware, including but not limited to, bolts, nuts, washers, lock washers, fastening screws, expansion anchors, U-bolts and hold-down clamps shall be Type 316L stainless steel unless otherwise noted.

CONDUIT AND TRAY SUPPORTS

Conduit and tray support brackets, as shown on the plans, shall conform to the provisions in Section 75-1.03, "Miscellaneous Bridge Metal," of the Standard Specifications and these special provisions.

The anchoring and supports of trays shown on the plans are designed to Seismic Zone 4 requirements. The Contractor shall determine the construction methods for Seismic Zone 4 for conduit supports at each support location, including location and length of support channel. Once determined, the Contractor shall submit to the Engineer for review and approval at least 30 working days prior to ordering or fabrication of conduit supports.

The Engineer will consult with the Structural Engineer of Record prior to approving concrete anchors requiring a depth of greater than 40 mm. Therefore it is recommended that support channels be embedded in the pre-fabricated concrete girder sections, during manufacture, for all trays and all major conduit runs. The following tray and conduit weight tables shall be used by the Contractor for determining the spacing of supports.

The tables show the maximum probable mass of insulated copper conductors assuming maximum tray and conduit fill.

Conduit size in mm:	41	53	63	78	103
Mass in kg/m:	6.15	9	12.9	18.75	28.5

Tray size in mm:	305	610	762
Mass in kg/m:	37.5	75	93.75

Maximum tray support span shall be as shown on the design drawings, but no larger than 4.74 meters..

Maximum conduit support span shall be as shown on the design drawings, but no larger than 3.00 meters.

10-3.__ PULL BOXES

NEMA TYPE 4 PULL BOXES SINGLE DOOR

The NEMA Type 4 single door pull box shall conform to the following:

Construction

A. Enclosure bodies are either 14-gage or 16-gage steel. All doors are 14-gage steel.
B. Seams shall be continuously welded and ground smooth, no holes or knockouts.
C. Stainless steel clamps on three sides of cover assure watertight seal.
D. Heavy gauge continuous hinge.
E. Cover removed by pulling stainless steel hinge pin.
F. Oil-resistant gasket and adhesive
G. The box engraving, physical size and dimensions shall be as shown on the plan drawings.
H. Finish shall be white inside with ANSI 61 gray outside finish over phosphatized surfaces. Optional panels shall be white.

Industry Standards

A. UL 508 Type 12.
B. NEMA/EEMAC Type 12.
C. JIC standard EGP-1-1967 (14-gage only).
D. CSA Type 12.
E. IEC 529, IP-65.

15 kV SPLICE BOX

The high voltage splice box shall be NEMA Type 4 as shown on the plans. The box shall conform to all applicable requirements in NEC, Article 370(D). Each cover shall be secured with at least ten stainless steel bolts. Cover makings for high voltage splice box shall read "Danger-High Voltage-Keep Out" and be permanently marked and readily visible. Enclosures and covers shall be 14-gage steel minimum with seams continuously welded and ground smooth. High voltage splice box shall be installed at each high voltage cable splice location.

SCADA and Telephone Termination Enclosure

The cabinets shall include terminations for 50 twisted pair communication leads. Noise suppression resistors with a 1-percent tolerance shall be provided for each pair.

10-3. CONDUCTORS, CABLES AND WIRING

Splices shall be insulated by heat-shrink tubing of the appropriate size after thoroughly painting the spliced conductors with electrical insulating coating.

The minimum insulation thickness, at any point, for Type USE, RHH or RHW wire shall be 1.0 mm for conductor sizes No. 14 to No. 10, inclusive, and 1.3 mm for No. 8 to No. 2, inclusive. The minimum insulation thickness, at any point, for Type THW and TW wires shall be 0.69 mm for conductor sizes No. 14 to No. 10, inclusive, 1.02 mm for No. 8, and 1.37 mm for No. 6 to No. 2, inclusive.

TESTING

The Contractor shall perform a high-voltage series lighting test consisting of the open circuit voltage of the connected constant current transformer between conductors and ground.

The high-voltage test shall not be performed on existing circuits or equipment. Non-testing of existing circuits and equipment shall not relieve the Contractor from the responsibility for malfunctioning of existing lighting circuits due to the Contractor making splices in or connecting to the circuits and such malfunctions shall be corrected at the Contractor's expense.

600 VOLT SINGLE CONDUCTOR CABLE

All 600-volt single conductor cable shall be the following unless otherwise noted on the plans. The cables shall be insulated with a EPR insulation rated for 600 volts. The cables shall be UL listed as Type RHH, RHW-2, or USE-2, VW-1 600 V. All cables No. 1/0 and larger shall be UL Type TC rated.

The conductor shall be soft annealed uncoated copper Class B stranded per ASTM B-8. The EPR insulation shall meet the requirements of ICEA S-68-516, NEMA WC-8, and UL Standards 44 and 854. The composite insulation thickness shall be as follows:

Conductor Size	EPR Thickness
No. 14 - No. 10	1.14 mm
No. 8	1.52 mm
No. 6 - No. 2	1.91 mm

The cable surface shall be printed in a contrasting color with the following information:

A. Manufacturers' name.
B. Plant number.
C. Conductor size.

D. Cable type.
E. Voltage rating.

The cable shall be manufactured by The Okonite Company, BICC Cables, Pirelli, or equal. Manufacturer shall furnish a notarized certificate of compliance to demonstrate cable furnished is in compliance with ICEA S-68-516 and UL 44.

600 VOLT MULTI-CONDUCTOR CABLE

All 600 volt rated multi-conductor cables shall be the following unless otherwise noted on the plans drawings. The cables shall be insulated with ethylene propylene rubber, assembled as a multi-conductor cable with flame resistant fillers and binder tape with an overall PVC jacket. The cables shall be capable of operating continuously in both wet and dry locations at conductor temperature of 90°C for normal operation, 130°C for emergency overload rating, and 250°C short circuit rating.

The conductors shall be soft annealed uncoated copper Class B stranded in conformance to the requirements in ASTM Designations: B 8. The single conductors shall be ethylene propylene rubber insulated meeting the requirements of UL 1581 and ICEA S-68-516. Color coding for sizes No. 10, 12, 14 and 16 AWG shall conform to the requirements in ICEA Method I Table K-2. Sizes No. 8 and larger shall be numerically coded using ICEA Method 4. The insulation thickness shall be as follows:

Conductor Size	EPR Thickness
No. 16	0.64 mm
No. 14 - No. 10	0.76 mm
No. 8 - No. 2	1.14 mm

The insulated conductors (and grounding conductor if required) shall be cabled together with flame resistant fillers and binder tape. The jacket shall be extruded PVC meeting the physical and dimensional requirements of ICEA S-68-516. The cable shall pass the vertical tray flame test requirements of IEEE 383 and 1202 and UL 1277. The cable shall be UL listed as Type TC.

The cable surface shall be printed in a contrasting color with the following information:

A. Manufacturers' name.
B. Plant number.
C. Number of conductors.
D. Conductor size.
E. Cable type.
F. Voltage rating.

CONTRACT NO. 04-0120R4

CONTRACT CHANGE ORDER NO 134

SHEET 11 OF 94

The cable shall be manufactured by The Okonite Company, BICC Cables, Pirelli, or equal. The manufacturer shall furnish a notarized certificate of compliance to demonstrate cable furnished is in compliance with ICEA S-68-516 and UL 1277.

500 kcmil Insulated Grounding Conductor

The 500 kcmil insulated grounding conductor shall be Class B stranded, annealed uncoated copper per UL Standard 83. The conductor shall be insulated with PVC complying with the physical and electrical requirements of UL Standard 83 for Type THW. The conductor shall bear the UL label for Type THW.

600 Volt Armored Multi-Conductor Cable

The 600 V armored cables shall be installed for the Temporary Bypass Structure. The individual conductor of the armored cable shall conform to the 600 V cable requirements as specified above in the special provisions. The armor sheath shall exceed the grounding conductor requirements of Table 250-95 of the National Electrical Code and UL 1569. The cable shall have stranded copper grounding conductor, located in the outer interstices. The armor sheath shall be impervious, continuous, welded, corrugated aluminum that will provides complete protection against moisture, liquid, and gasses and has excellent mechanical strength. The armor sheath shall be covered with low temperature black polyvinyl chloride to protect cable against chemical attack. The cable shall be UL Listed as type MC cable per Article 334 of the NEC.

SHIELDED TWISTED PAIR CABLES

All shielded twisted pair No. 18 (0.832 mm2) multi-conductor communication cables (fifty pairs, six pairs and two pairs) and twisted triad No. 16 shall be stranded annealed copper (per ASTM Designations: B 3 and ASTM B 8). The insulated single conductors shall be twisted into pairs, triads or multiple conductor components. The insulation shall be flame-retardant cross-linked polyethylene with color code in conformance with the requirements in ICEA Method 1. The insulation shall be 0.76 mm nominal.

The cable components are cabled with non-hygroscopic fillers, as necessary, and an overall binder tape. The individual pairs or triads shall be shielded with a 0.19 mm Aluminum/polymer tape with tinned copper drain wire applied helically over the pairs or triads. The overall shield shall be a 0.19 mm Aluminum/polymer tape with tinned copper drain wire applied helically over the cable core.

The overall jacket shall be 2.8 mm Flame-retardant and sunlight resistant polyvinyl chloride (PVC). A nylon ripcord shall be applied longitudinally under the overall jacket to facilitate jacket removal.

The cable shall be suitable for Cable Tray use and have the following ratings and listings:

A. UL Type TC - 600 volt.
B. UL Class XL.
C. UL Subject 13 and 1277.
D. IEEE 383 and 1202.
E. ICEA S-66-524 - 600 volt.

CONTRACT NO. 04-0120R4

CONTRACT CHANGE ORDER NO 134

SHEET 12 OF 94

The cable shall be manufactured by Belden Cable, The Okonite Company, BICC Cables, Pirelli, or equal. The manufacturer shall furnish a notarized certificate of compliance to demonstrate cable furnished is in compliance with ICEA S-68-516 and UL 44.

Communication Cable Splices

Splices shall be done only as approved by the Engineer. Splices for shielded No. 18

multi-conductor, twisted pair cables shall be as recommended by the cable manufacturer and suitable for the environment that the splice is located. The Contractor shall submit the cable manufacturer's recommended splicing method to the Engineer for approval prior to using the method. The Engineer shall approve splice locations. The splicing kits shall be manufactured by Raychem, 3M or other approved manufacturer.

15 kV CABLE

Cable Splices

All 15 kV splices shall be enclosed on a 15 kV splice box. The splices, shall be IEEE 404, heat shrinkable cable splices in kit form, capable of properly splicing cables specified in this section. Splice kits shall contain all necessary components to reinstate primary cable insulation, metallic shielding and grounding systems and overall jacket to the equivalent of the cable itself. Splices shall be of a uniform cross-section and shall consist of heat-shrinkable radiation crosslinked insulation. The outer insulating layer shall be bonded to a conducting layer for shielding. The splice shall be rejacketed with a heavy-wall, heat-shrinkable sealant lined sleeve to provide a waterproof hot melt adhesive seal. Splices shall contain heat-shrinkable radiation cross-linked high dielectric constant linear stress relief material. Splices shall contain a high relative permittivity electric stress relief mastic for insulation shield cutback treatment and a heat-activated sealant for environmental sealing. Kits shall allow splicing cables with different types of insulation, conductor sizes, and shielding construction. Kits shall accommodate commercially available standard connectors.

Cable End Sealing Caps

The end seal caps shall be heat-shrinkable crosslinked polymeric end sealing caps capable of sealing cables specified in this section. End caps shall be precoated with a heat activated sealant.

DC High Potential Test

Perform DC high potential test of each conductor in accordance with NEMA WC 5.

15 kV Armored Shielded Cable

The three conductor 15 kV armored shielded cables shall be 133 percent insulation rated power cable designed to operate at conductor temperatures of 90°C normal, 130°C emergency, and 250°C short circuit conditions as defined by ICEA S-93-639 (NEMA WC-78) and (UL) Standard 1072. The cable shall be suitable for installations above or below grade, indoors or outdoors, and in wet or dry locations. The qualifying cable shall be (UL) labeled as MV-90, Sunlight Resistant and for cable tray use in accordance with UL Standard 1072.

The cable shall have a continuous corrugated welded aluminum sheath encases the cable core per UL 1072 and UL listing E-38916 recognized as a grounding conductor by NEC. The cable sheath shall provide complete protection against moisture, liquid and gasses and shall have excellent mechanical strength. The sheath shall be protected with a low temperature polyvinyl chloride jacket in accordance with UL 1072 to protect the cable against chemical attack.

Conductors

The conductors shall be compressed, Class B stranded copper and shall be in

CONTRACT NO. 04-012024 CONTRACT CHANGE ORDER NO 134
SHEET 12 OF 94

accordance with the requirements of ICEA S-93-639. The copper conductors shall consist of all bare strands or tin-coated strands in the outer layer in conformance with the requirements in ASTM Designations: B 3, B 8 and B 33. Conductors shall be unbroken for the full length of the reels specified in the Purchase Order. Reels containing splices will be rejected.

Conductor Shield

The conductor shielding shall consist of an extruded, black-colored, nonmetallic semiconducting EPR thermosetting compound material in conformance with the provisions in Section 2.7 of ICEA S-93-639. The minimum average thickness shall be 0.5 mm.

Insulation

The insulation shall be a discharge resistant, ethylene propylene (EP) based compound and be listed by Underwriters Laboratories. The minimum average thickness of the insulation shall be 5.59 mm. The manufacturer shall perform the Insulation Corona Discharge Resistance Test (3.9.3.3 of ICEA S-93-639) tested in conformance with the requirements in ASTM Designation: D 2275-89, "Standard Test Method for Voltage Endurance of Solid Electrical insulating materials Subjected to Partial Discharges (Corona) on the Surface," and submit the results to the Engineer before acceptance of the cable.

Insulation Shielding

The insulation shielding shall consist of a nonmetallic semiconducting EPR material extruded directly over the insulation and a 0.12-mm bare copper tape. The nonmetallic semi conducting layer shall be black-colored with properties and thickness conforming to the requirements of Table 4a of ICEA S-68-516-93-639 and Tables 14.2 and 14.3 of UL-1072. The layer shall be free stripping from the EP insulation. The 0.12-mm bare copper tape shall be helical applied with a 15 percent overlap, directly over the nonmetallic layer.

Metallic Shield

The metallic shield shall be coated copper tape, helically applied with a minimum overlap of 12.5 percent, directly over the nonmetallic layer.

Phase Identification

A colored tape shall be applied longitudinally under the copper shielding tape to provide phase identification.

Assembly

The three phase conductors shall be cabled together with class B stranded, uncoated copper grounding conductor and suitable fillers to make round. Length of lay shall not exceed 35 times the phase conductor diameter. The grounding conductor shall comply with the requirement of UL Standard 1072.

Cable Tape

A suitable cable tape shall be applied over the assembly to hold the core together and provide bedding for the armor.

Armor

Aluminum steel interlocked armor shall be applied over the cable core. Armor shall be in accordance with UL Standard 1072 and Part 4 of ICEA.

CONTRACT NO. 04-0120R4

CONTRACT CHANGE ORDER NO 134

Jacket

An extruded covering of PVC shall be applied over the armor. The average thickness and properties of the PVC covering shall be as specified in Part 4 of ICEA. The minimum thickness at any point shall be not less than 70 percent of the required average thickness. The covering shall meet the Sunlight Resistant requirements of UL.

Identification

An ink print legend shall be applied to the surface of the PVC covering providing cable and manufacturer identification.

Shielded-Twisted Pair Armored Cables

The instrumentation armored cables shall be installed for the ~~south-south staging~~ temporary bypass structure. The individual conductor of the armored cable shall conform to the shielded-twisted pair cable requirements as specified above in the special provisions. The armor sheath shall be impervious, continuous, welded, corrugated aluminum that will provides complete protection against moisture, liquid, and gasses and shall have excellent mechanical strength and provides equipment grounding through the sheath. The armor sheath shall be covered with low temperature black polyvinyl chloride to protect cable against chemical attack. The cable shall be UL Listed.

Cable Tray

Cable tray shall be provided where shown on the plans and shall include the complete system defined to include, but not be limited to, straight sections of ladder type cable tray, bends, elbows, barriers, tees, drop-outs, supports and accessories. Cable tray shall meet requirements of ASTM A123, A653, A1011, A1008, B633 as well as NEMA VE1 and VE2, NEC Article 392, NFPA 70B and UL compliance.

Cable tray shall be made from structural quality steel meeting the minimum properties of ASTM A1011 SS, Grade 33. All splice plates must also be hot dipped galvanized after fabrication. Tray shall consist of two longitudinal members (side rails) with transverse members (rungs) welded to the side rails. Rungs shall be 12 inches on center. Spacing in radiused fittings shall be 9 inches and measured at the center of the tray's width. Each rung shall be capable of supporting the cable load, with safety factor of 1.5 and a 200 lb. concentrated load when tested in accordance with NEMA VE1, section 5.4. Tray shall be 610 mm in width. Splice plates shall be manufactured of high strength steel and shall be attached with ribbed carriage bolts and serrated locknuts. Hardware shall be Chromium Zinc in accordance with ASTM F-1136-88.

Barrier strips shall be as specified on the drawings and fastened into the tray with self drilling screws. All trays shall be constructed with rounded edges and smooth surfaces.

Cable Installation in Cable Tray

All cable installed in cable trays shall be dressed neatly, arranged in bundles by function and strapped to the cable tray at intervals no less than 600 mm using plastic ties.

10-3.09 FIELD TESTING

Field testing shall be performed in the presence of the Engineer. The Contractor shall notify the Engineer five days prior to conducting tests. The Contractor shall furnish all materials, instruments, labor, and equipment necessary to conduct field tests. The Contractor shall perform all tests recommended by the manufacturer unless specifically waived by the Engineer. The Contractor shall perform acceptance tests of all installed

CONTRACT NO. 04-012024 CONTRACT CHANGE ORDER NO 134

SHEET 15 OF 94

electrical equipment in accordance with latest applicable ICEA, NETA and IEEE standards.

The Contractor shall maintain a written record of all tests performed which includes date, test performed, personnel involved, devices tested, serial number and name of test equipment, and test results. All field test report shall be signed and dated by the Contractor.

The Contractor shall provide and use safety devices such as rubber gloves, protective barriers, and danger signs to protect and warn personnel in test vicinity. The Contractor shall replace cables that are damaged due to improper procedures or handling.

Temporary Bypass Structure Electrical Drawing Index

West Tie In

Electrical Sheet index, Symbols Abbreviations and notes	E-1
Project Notes	E-2
Westbound Lighting	E-3
Eastbound Lighting	E-4R1
Scada/Comm Cable Reroute	E-5
12.47 KV Cable Routes	E-6
Details	E-7
Details Cable and Pull box Schedules	E-8
Details 600 V Cable Block Diagram	E-9
Details 12.47 kV Cable Block Diagram	E-10
Details Ground Conductor Block Diagram	E-11
Details Scada And Communications Cable Block Diagram	E-12
Details Westbound Lighting Diagram	E-13
Details Eastbound Lighting Diagram	E-14R1
Temporary Lighting Details	E-15
Lighting Details	E-16
Cable Tray Mounting Details	E-17
New Cable Support Sections And Details	E-18
Terminal Box TB-21E Connection Details	E-19
Terminal Box TB-21E Connection Diagram	E-20
Terminal Box TB-23E Connection Diagram	E-21
Scada/Comm Terminal Box TB-21E	E-22
Details 600 V Terminal Box TB-23E	E-23
Call Box Electrical Work	E-24
Call Box Wiring Block/Diagram	E-25
Terminal Box TB-01 Connection Diagram	E-26

Viaduct

Electrical Notes and Sheet Index	E-1
Electrical Symbols and Abbreviations	E-2
Sign Illumination	E-3
Sign Illumination	E-4
Sign illlumination Details	E-4A
Signal And Lighting Cable Reroute	E-5
Signal And Lighting Cable Reroute	E-6
Signal And Lighting Cable Reroute	E-7
Signal And Lighting Cable Schedules	E-8
Signal And Lighting Details	E-17A
Lighting Westbound	E-18
Lighting Westbound	E-19
Lighting Westbound	E-20
Lighting Eastbound	E-21
Lighting Eastbound	E-22
Lighting Eastbound	E-23
Lighting Diagram Westbound	E-24

CONTRACT NO. 04-0120R4

CONTRACT CHANGE ORDER NO 134

SHEET 17 OF 94

Lighting Diagram Eastbound	E-24A
Lighting Details	E-25
Lighting Details	E-26
Lighting Details	E-27
Signal and Lighting Call Box Locations Westbound	E-28
Signal and Lighting Call Box Locations Eastbound	E-29

East Tie-In

Electrical Sheet Index Symbols, and Abbreviations	E-1
Project Notes	E-2
Call Box Installation	E-3
Cable Reroute Installation	E-4
Westbound Lighting	E-5
Eastbound Lighting	E-6R1
East Tie-In Structure-Lighting	E-7R1
Temporary 12.47kV Power System	E-8
Details Cable Schedule	E-9
Details Westbound Lighting Diagram	E-10
Details Eastbound Lighting Diagram	E-11R1
Details 12.47kV Cable Block Diagram	E-12
Details Ground Conductor Block Diagram	E-13
Details Scada and Communication Cable block Diagram	E-14
Elevation RTU #8 Relocation Work	E-15
Details New Rtu #8 Station	E-16
Details RTU #8 Relocation Work Block Diagram First Order of Work	E-17
Details RTU #8 Relocation Work Block Diagram	E-18
Details Typical RTU Group Circuit Diagram	E-19
Details Typical Call Box System	E-20
Details RTU #8 Elementary Connection Diagram	E-21
Details Typical Relay Wiring Diagram	E-22
Details RTU #8 Terminal Cabinents	E-23
Details Cable Tray Mounting	E-24
Details Temporary Lighting	E-25
Details Typical Conduit/cable Supports	E-26
Details New RTU #8 On Pier E1	E-27

DRAWING No.	DRAWING TITLE
E-1	ELECTRICAL SHEET INDEX, SYMBOLS, ABBREVIATIONS AND NOTES TEMPORARY BYPASS STRUCTURE-WEST TIE IN
E-2	PROJECT NOTES TEMPORARY BYPASS STRUCTURE-WEST TIE IN
E-3	WEST SPAN LIGHTING TEMPORARY BYPASS STRUCTURE-WEST TIE IN
E-4	EAST SPAN LIGHTING TEMPORARY BYPASS STRUCTURE-WEST TIE IN
E-5	CABLE REROUTE TEMPORARY BYPASS STRUCTURE-WEST TIE IN
E-6	12.47kv CABLES REROUTE TEMPORARY BYPASS STRUCTURE-WEST TIE IN
E-7	DETAILS TEMPORARY BYPASS STRUCTURE-WEST TIE IN
E-8	DETAILS CABLE AND PULL BOX SCHEDULES TEMPORARY BYPASS STRUCTURE-WEST TIE IN
E-9	DETAILS 600V CABLE BLOCK DIAGRAM TEMPORARY BYPASS STRUCTURE-WEST TIE IN
E-10	DETAILS 12.47kV CABLE BLOCK DIAGRAM TEMPORARY BYPASS STRUCTURE-WEST TIE IN
E-11	DETAILS GROUND CONDUCTOR BLOCK DIAGRAM TEMPORARY BYPASS STRUCTURE-WEST TIE IN
E-12	DETAILS SCADA AND COMMUNICATION CABLE BLOCK DIAGRAM TEMPORARY BYPASS STRUCTURE-WEST TIE IN
E-13	DETAILS WESTBOUND LIGHTING DIAGRAM TEMPORARY BYPASS STRUCTURE-WEST TIE IN
E-14	DETAILS EASTBOUND LIGHTING TEMPORARY BYPASS STRUCTURE-WEST TIE IN
E-15	TEMPORARY LIGHTING DETAILS TEMPORARY BYPASS STRUCTURE-WEST TIE IN
E-16	LIGHTING DETAILS TEMPORARY BYPASS STRUCTURE-WEST TIE IN
E-17	CABLE TRAY MOUNTING DETAILS TEMPORARY BYPASS STRUCTURE-WEST TIE IN
E-18	DETAILS NEW CABLE SUPPORT SECTIONS AND DETAILS TEMPORARY BYPASS STRUCTURE-WEST TIE IN
E-19	DETAILS TERMINAL BOX TB-22E CONNECTION DIAGRAM TEMPORARY BYPASS STRUCTURE-WEST TIE IN
E-20	DETAILS TERMINAL BOX TB-21E CONNECTION DIAGRAM TEMPORARY BYPASS STRUCTURE-WEST TIE IN
E-21	DETAILS TERMINAL BOX TB-23E CONNECTION DIAGRAM TEMPORARY BYPASS STRUCTURE-WEST TIE IN
E-22	DETAILS SCADA/CCDWR TERMINAL BOX TB-21E TEMPORARY BYPASS STRUCTURE-WEST TIE IN
E-23	DETAILS 600V TERMINAL BOX TE-23E TEMPORARY BYPASS STRUCTURE-WEST TIE IN
E-24	CALL BOX ELECTRICAL WORK TEMPORARY BYPASS STRUCTURE-WEST TIE IN
E-25	DETAILS CALL BOX WIRING/BLOCK DIAGRAM TEMPORARY BYPASS STRUCTURE-WEST TIE IN
E-26	DETAILS TERMINAL BOX TB-01 CONNECTION DIAGRAM TEMPORARY BYPASS STRUCTURE-WEST TIE IN

ABBREVIATIONS

NOT LISTED IN CALTRANS STANDARD PLANS ES-1A AND ES-1B

CB	Call Box
CEC	California Electrical Code
COM	Communication
Cont'd	Continued
EB	Eastbound
(E), Exist	Existing
FSC	Fiber Splice Closure
FTC	Fiber Optic Trunkline Cable
G, GND, Gnd	Ground (ground cable)
GRS	Galvanized Rigid Steel
JB	Junction Box
kcmil	Kilo Circular Mil
kV	Kilovolt
LVCC	Low Voltage Control Center
LTS, lts	Light
LD	Lower Deck
MFR	Manufacturer
MH	Mounting Height
N.E.C.	National Electrical Code
PR	Pair
PWR	Power
SFOBB	San Francisco Oakland Bay Bridge
SHLD, Shld	Shield
Term	Terminal
TOS	Traffic Operating System
UD	Upper Deck
V	Volt
W	Wire
WB	Westbound
YBI	Yerba Bueno Island

SYMBOLS

NOT LISTED IN CALTRANS STANDARD PLANS ES-1A, ES-2D AND ES-1C

⟨1⟩	Sheet Notes, applicable only to the Drawing 1=Sequential number
[1]	Project notes, applicable for all drawings.
J	Junction Box, Conduit Fitting
	Call Box
——o	Conduit turned up
——•	Conduit turned down
———	Conduit or Cable run, exposed
– – – –	Conduit run concealed in wall, concrete barrier, slab or routed underground duct bank

LIGHTING POLE IDENTIFICATION

243 - 1
- 243 — Roadway Ltg Pole
- 1 — Assigned sequential lighting pole number
- Assigned circuit number

PERMANENT AND TEMPORARY WEST AND EAST SPAN CABLES

243 - 1A
- 243 — Permanent cable location 1- Westbound 2- Eastbound 1- Temporary
- 1A — Circuit number

Caltrans Metric

DIST	COUNTY	ROUTE	KP/OMTTER POST TOTAL PROJECT	SHEET NO	TOTAL SHEETS
04	SF	80		20	45

Carol Light — REGISTERED ELECTRICAL ENGINEER — 3/1/08 DATE

REGISTERED PROFESSIONAL ENGINEER — CAROL J. LIGHT — No. 10145 — Exp. 09/30/08 — ELECTRICAL — STATE OF CALIFORNIA

PLANS APPROVAL DATE

PB Americas, Inc.
303 Second St., Suite 700N
San Francisco, CA 94107-1317

SILVERMAN & LIGHT
1210 PARK AVENUE - SUITE 100
EMERYVILLE, CA 94608-3632

The State of California or its officers or agents shall not be responsible for the accuracy or completeness of electronic copies of this plan sheet.

Caltrans now has a web site! To get to the web site, go to: http://www.dot.ca.gov/

CONTRACT NO. 04-0120R4

CONTRACT CHANGE ORDER NO 134

SHEET 19 OF 94

ELECTRICAL SHEET INDEX, SYMBOLS, AND ABBREVIATIONS
TEMPORARY BYPASS STRUCTURE-WEST TIE IN

NO SCALE

E-1

CALCULATED/DESIGNED BY: BJ
CHECKED BY: CL
DATE REVISED: DATE
REVISED BY:
DESIGN OVERSIGHT
STATE OF CALIFORNIA - DEPARTMENT OF TRANSPORTATION
Caltrans

THIS PLAN ACCURATE FOR ELECTRICAL WORK ONLY

FOR REDUCED PLANS ORIGINAL SCALE IS IN MILLIMETERS 0 20 40 60 80

DGN FILE => E:\c3103\SouthDetour\CCO WTI-2\Transmit\Final Submittal 20080303\4120R3UA001.dgn
USERNAME => reyasi

CU 04251 EA 0120R3

DATE PLOTTED => 3/6/2008
TIME PLOTTED => 10:29:53 AM

DIST	COUNTY	ROUTE	KILOMETER POST TOTAL PROJECT	SHEET No	TOTAL SHEETS
04	SF	80		21	45

Carol Light 3/3/08
REGISTERED ELECTRICAL ENGINEER DATE

PLANS APPROVAL DATE

REGISTERED PROFESSIONAL ENGINEER CAROL LIGHT No. 13145 Exp. 09/30/08 ELECTRICAL STATE OF CALIFORNIA

PB Americas, Inc.
303 Second St., Suite 700N
San Francisco, CA 94107-1317

SILVERMAN & LIGHT
1201 PARK AVENUE - SUITE 100
EMERYVILLE, CA 94608-3632

The State of California or its officers or agents shall not be responsible for the accuracy or completeness of electronic copies of this plan sheet.

Caltrans now has a web site. To get to the web site, go to http://www.dot.ca.gov

GENERAL NOTES

1. All electrical work shall conform to (1999 and 2004) the latest issue of State of California Department of Transportation Standard Specifications and Standard Plans. These general notes and the special provisions under this contract also apply. For any conflict of provisions, California State Guidelines apply.
2. All conduit routing is shown diagrammatically. Pull box locations are located and shown on plan drawings. The Contractor shall provide additional pull boxes as required. Exact location of equipment and devices may be adjusted by field conditions or as directed by the Engineer.
3. Minimum conduit sizes shall be 21 mm. All conduits located outside shall be rigid galvanized steel, PVC coated. All conduits routed inside girder shall be rigid galvanized steel.
4. All conduit fittings for 78 mm and above shall have a 610 mm minimum bending radius.
5. All equipment and devices shall be provided with nameplate tags as shown in the drawings.
6. All feeders and branch circuits shall be provided with an equipment ground wire.
7. 15 kV splice boxes shall be installed as shown and permanently marked "DANGER-HIGH VOLTAGE-KEEP OUT". The letters shall be block type and at least 50 mm in height.
8. The Contractor shall label all conductors and cables per cable schedules.
9. Call boxes will be State-furnished.
10. The Contractor shall provide all conduits with permanent field markers and labels.
11. The Contractor shall verify existing installation prior to intercepting and splicing with the new armored cable to ensure continuity of electrical service to West span.
12. The Contractor shall provide and install new armored cables on metal racks, troughs, in cable trays or secured to supports spaced not greater than 1500 mm apart.
13. The Contractor shall provide splice boxes for armored cables.
14. For other related work not shown on the plan sheets, see Electrical Special Provisions.
15. Contractor to verify all controlling field dimensions before ordering or fabricating any material.
16. Provide and install new armored cables or conduit as shown, scheduled and as needed in construction. Support cables or conduit from surface using 41x41 channel, hot dipped galvanized and appropriate strut mounted clamps. See Detail. Support armored cables or conduit horizontally along Temporary Bypass Structure (TBS) using steel ladder cable trays, hot dipped galvanized steel after fabrication (Cooper E-Line Series 148G12-24-144 or equal). See Details E-17 and E-18 for cable tray sizing, support, etc.
17. Verify cables no longer used or already abandoned by Caltrans. These cables will not be intercepted or spliced and are to be abandoned in place. After completion of work the Contractor is to remove cables, pullboxes, junction boxes, terminal boxes and cabinets inside Vaults #2, #3, #5 and connecting utility tunnels, including cables abandoned by others.
18. New armored cable will be completely routed and tested before cutting existing circuits and/ or interconnecting new.
19. Existing temporary power/ signal cables installed on Southgate Road wall and by YBI Substation project are to be removed after cutover (Reference SFOBB Electrical Design RFI response, Letter 05.03.01-00453, June 6, 2005 from Caltrans).
20. Contractor to provide expansion fittings or loops at bridge expansion joints or points of deflection. Provide stainless steel support grips to hold the weight of electrical cable as it loops or hang in vertical, sloping or horizontal position.

CONTRACT NO. 04-0120R4

CONTRACT CHANGE ORDER NO 134

SHEET 20 OF 94

PROJECT NOTES
TEMPORARY BYPASS STRUCTURE-WEST TIE IN
NO SCALE

E-2

STATE OF CALIFORNIA - DEPARTMENT OF TRANSPORTATION
Caltrans

DESIGN OVERSIGHT

CALCULATED/ DESIGNED BY | DATE | REVISED BY
CHECKED BY | DATE REVISED

THIS PLAN ACCURATE FOR ELECTRICAL WORK ONLY

FOR REDUCED PLANS ORIGINAL SCALE IS IN MILLIMETERS 0 20 40 60 80

DGN FILE => I:\13103\SouthDetour\CCO WTI-2\Transmit\Final Submittal 20080303\4120R3U4002.dgn
USERNAME => kaojo

CU 04251 EA 0120R3

DATE PLOTTED => 3/6/2008
TIME PLOTTED => 10:43:38 AM

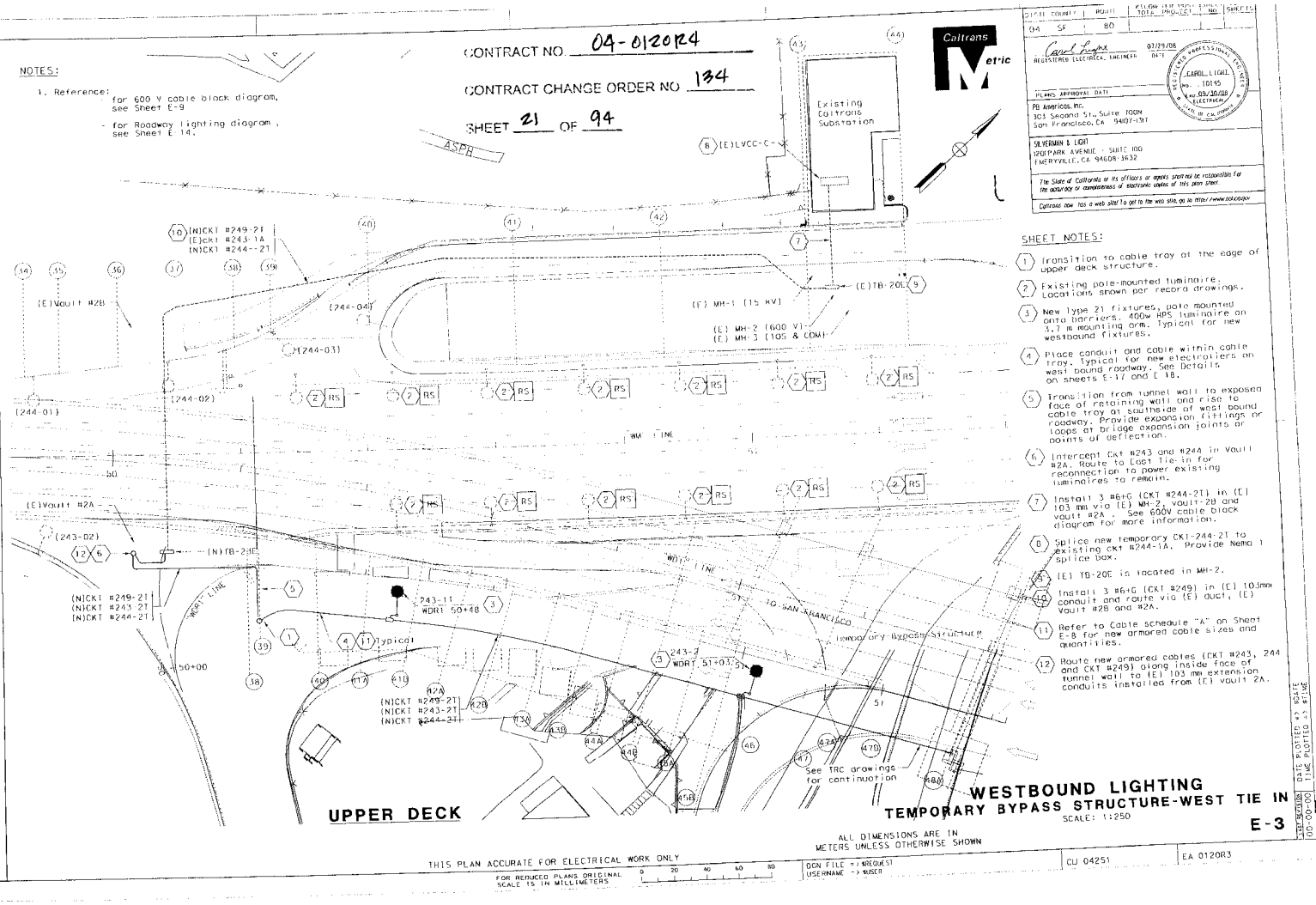
CONTRACT NO. 04-0120R4
CONTRACT CHANGE ORDER NO. 134
SHEET 21 OF 94
NOTES:
1. Reference:
for 600 V cable block diagram, see Sheet E-9
- for Roadway lighting diagram, see Sheet E 14.
Caltrans Metric
Existing Caltrans Substation
ASPH
(E)LVCC-C
(E)TB-20C
(E) MH-1 (15 KV)
(E) MH-2 (600 V)
(E) MH-3 (10S & COM)
(E)Vault #2B
(E)Vault #2A
(N)TB-23C
(N)CKT #249-2T
(E)CKT #243-1A
(N)CKT #244--2T
(N)CKT #249-2T
(N)CKT #243-2T
(N)CKT #244-2T
(244-01)
(244-02)
(244-03)
(244-04)
(243-02)
WDRT LINE
243-1
WDRT 50+48
243-2
WDRT 51+03.51
Typical
50+00
TO SAN FRANCISCO
Temporary Bypass Structure
See TRC drawings for continuation
UPPER DECK
WESTBOUND LIGHTING
TEMPORARY BYPASS STRUCTURE-WEST TIE IN
SCALE: 1:250
E-3
SHEET NOTES:
1 Transition to cable tray at the edge of upper deck structure.
2 Existing pole-mounted luminaire. Locations shown per record drawings.
3 New type 21 fixtures, pole mounted onto barriers. 400w HPS luminaire on 1.7 m mounting arm. Typical for new westbound fixtures.
4 Place conduit and cable within cable tray. Typical for new electroliers on west bound roadway. See Details on sheets E-17 and E 18.
5 Transition from tunnel wall to exposed face of retaining wall and rise to cable tray at southside of west bound roadway. Provide expansion fittings or loops at bridge expansion joints or points of deflection.
6 Intercept CKT #243 and #244 in Vault #2A. Route to Lost Tie-in for reconnection to power existing luminaires to remain.
7 Install 3 #6+G (CKT #244-2T) in (E) 103 mm via (E) MH-2, vault-2B and vault #2A . See 600V cable block diagram for more information.
8 Splice new temporary CKT-244-2T to existing CKT #244-1A. Provide Nema 1 splice box.
9 (E) TB-20E is located in MH-2.
10 Install 3 #6+G (CKT #249) in (E) 103mm conduit and route via (E) duct, (E) Vault #2B and #2A.
11 Refer to Cable schedule "A" on Sheet E-8 for new armored cable sizes and quantities.
12 Route new armored cables (CKT #243, 244 and CKT #249) along inside face of tunnel wall to (E) 103 mm extension conduits installed from (E) vault 2A.
Carol Lynn
REGISTERED ELECTRICAL ENGINEER
03/29/08
DATE
PLANS APPROVAL DATE
CAROL LYNN
No. 10145
Exp. 09/30/08
ELECTRICAL
PB Americas, Inc.
303 Second St., Suite 700N
San Francisco, CA 94107-1317
SILVERMAN & LIGHT
1201 PARK AVENUE - SUITE 100
EMERYVILLE, CA 94608-3632
The State of California or its officers or agents shall not be responsible for the accuracy or completeness of electronic copies of this plan sheet.
Caltrans now has a web site! To get to the web site, go to: http://www.dot.ca.gov
DISTRICT 04 | COUNTY SF | ROUTE 80 | TOTAL PROJECT NO. | SHEETS
STATE OF CALIFORNIA - DEPARTMENT OF TRANSPORTATION
DESIGN OVERSIGHT
CALCULATED/DESIGNED BY BJ
CHECKED BY CL
DATE REVISED
REVISED BY
DATE
THIS PLAN ACCURATE FOR ELECTRICAL WORK ONLY
FOR REDUCED PLANS ORIGINAL SCALE IS IN MILLIMETERS
0 20 40 60 80
ALL DIMENSIONS ARE IN METERS UNLESS OTHERWISE SHOWN
DGN FILE => $REQUEST
USERNAME -> $USER
CU 04251
EA 0120R3
DATE PLOTTED => $DATE
TIME PLOTTED => $TIME

NOTES:

1. Reference:

-for TB-23E connection diagram, see Sheet E-23.

-for 600 V cable block diagram, see Sheet E-9.

-for Roadway lighting diagram, see Sheet E-15.

(10) Route new armored cables (CKT #241 and #242) along inside face of tunnel wall to (E) 103 mm extension conduits installed from (E) vault 2A.

CONTRACT NO. 04-0120R4

CONTRACT CHANGE ORDER NO 134

SHEET 22 OF 94

Existing Caltrans Substation

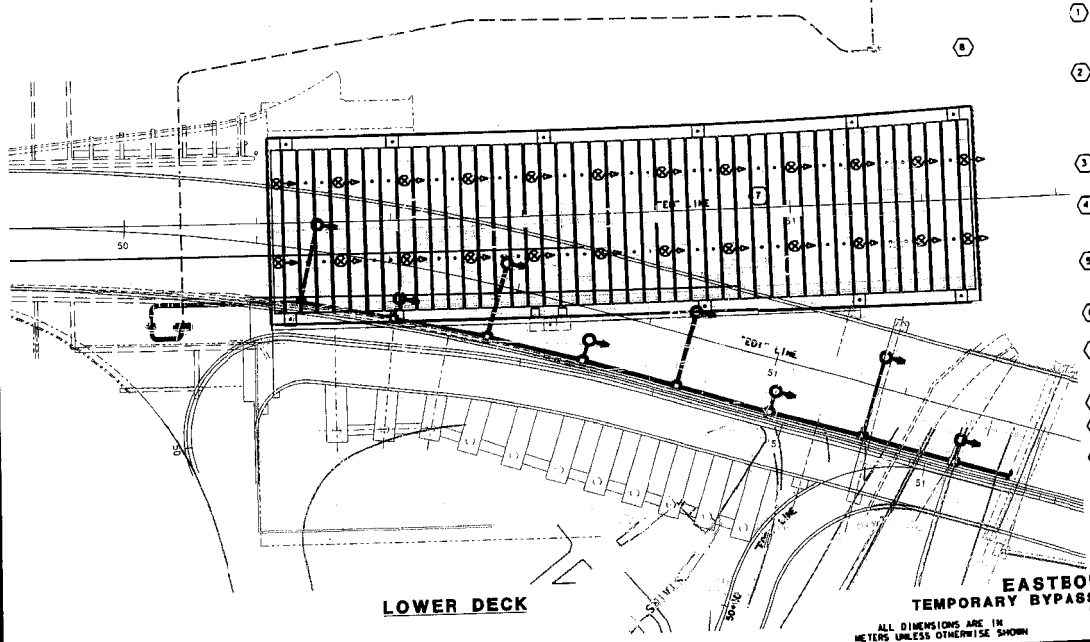

LOWER DECK

DIST	COUNTY	ROUTE	KILOMETER POST TOTAL PROJECT	SHEET NO.	TOTAL SHEETS
04	SF	80			

Carl Light 03/03/08
REGISTERED ELECTRICAL ENGINEER DATE

PLANS APPROVAL DATE

CARL LIGHT No. 18185 Exp. 06/30/09 ELECTRICAL STATE OF CALIFORNIA

PB Americas, Inc.
303 Second St., Suite 700N
San Francisco, CA 94107-1317

SUBCONSULTANTS
ADDRESS
CITY, STATE, ZIP

The State of California or its officers or agents shall not be responsible for the accuracy or completeness of electronic copies of this plan sheet.

Contractor may use a web offset to go to the web site to obtain hard copies

SHEET NOTES:

1. Install surface mounted Type III soffit lighting fixture with 150 watt HPS lamp. Secure light fixture to concrete structure of westbound deck between bent caps.
2. Install new NEMA type 4 splice box. Splice box to have a minimum dimension of 305(L) x 305(W) x 152(D). Fasten box on the ceiling with four (4) 10-24 concrete expansion anchors and hex head cap screws. Provide and fuse splice connectors to each ungrounded
3. Locate light fixture 4.0 m from the inside face of barrier unless otherwise indicated.
4. Install new 41C conduit with 6 #6 AWG and 1 #8G conductors (CKT #241 and #242). Provide conduit support every 1.5 meter maximum. See detail 1 on Sheet E-18.
5. Install new 27C liquidtight flexible metal conduit with 3 #12 AWG conductors from splice box to lighting fixture.
6. Intercept (E) ckt #241 and ckt #242 in (E) vault #2A and route via (N) TB-23E.
7. Disconnect (E) soffit lighting fixture between bent #38 thru 48 after new temporary 55D soffit lighting is operational.
8. (E) TB-20E located in (E) MH-2.
9. See 600V cable block diagram for more information.
10. Install 6 #6 & 1 #8 (CKT #241 & 242) in (E) 103 conduit and route from (E) TB-20E to (N) TB-23E via (E) vault 2B and vault 2A.

EASTBOUND LIGHTING
TEMPORARY BYPASS STRUCTURE-WEST TIE IN
SCALE: 1:250

E-4R1

ALL DIMENSIONS ARE IN METERS UNLESS OTHERWISE SHOWN

THIS PLAN ACCURATE FOR ELECTRICAL WORK ONLY

FOR REDUCED PLANS ORIGINAL SCALE IS IN MILLIMETERS

0 20 40 60 80

DGN FILE => $REQUEST
USERNAME => $USER

DU 04251

EA 0120R3

REVISIONS DATE PLOTTED => $DATE TIME PLOTTED => $TIME 00-00-00

CALCULATED/DESIGNED BY | CHECKED BY | DRAWN BY | DATE REVISED | REVISED BY | DATE

DESIGN ENGINEER

C:\ETIWTI\4120R3ua04R1.dgn 11/26/2008 09:03:19 AM

DIST	COUNTY	ROUTE	KILOMETER POST TOTAL PROJECT	SHEET NO.	TOTAL SHEETS
04	SF	80		24	45

Carol Light 3/3/08
REGISTERED ELECTRICAL ENGINEER DATE

PLANS APPROVAL DATE

REGISTERED PROFESSIONAL ENGINEER CAROL LIGHT No. 10145 Exp. 09/30/08 ELECTRICAL STATE OF CALIFORNIA

PB Americas, Inc.
303 Second St., Suite 700N
San Francisco, CA 94107-1317

SILVERMAN & LIGHT
1201 PARK AVENUE - SUITE 100
EMERYVILLE, CA 94608-3632

The State of California or its officers or agents shall not be responsible for the accuracy or completeness of electronic copies of this plan sheet.

Caltrans now has a web site! To get to the web site, go to http://www.dot.ca.gov

Caltrans Metric

NOTES:

1. Reference:
   - for SCADA/Comm. cable block diagram, see E-12.
   - for cable schedule, see E-8

CONTRACT NO. 04-0120R4

CONTRACT CHANGE ORDER NO 134

SHEET 23 OF 94

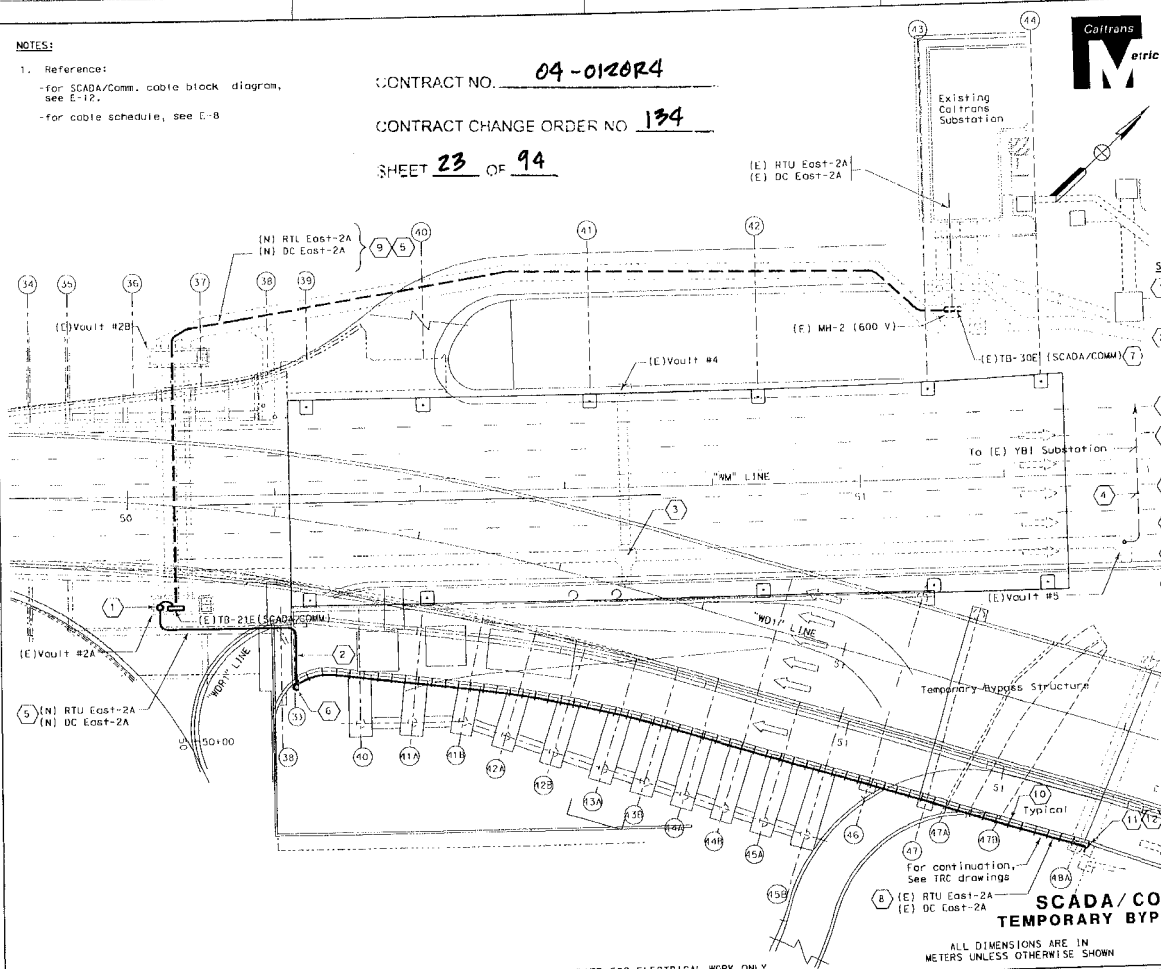

SHEET NOTES:

1. Route new armored cables along inside face of tunnel wall to (E) 103 mm extension conduits installed from (E) Vault #2A. See cable schedule on E-8.
2. Transition from tunnel wall to exposed face of retaining wall, then rise to cable tray at south edge of westbound roadway. Provide expansion fittings or loops at bridge expansion joints or points of deflection.
3. (E) Vault #3
4. Existing temporary cables from Vault #5 to YBI Substation mounted on surface of structures. To be removed after new cables are installed and energized.
5. Refer to schedule "A" on E-8 for new armored cable schedule. Mount new cables on cable tray.
6. Transition to cable tray at the edge of the upper deck structure.
7. TB-30E is located in (E) MH-3
8. Route new armored cables on cable tray. Provide stainless cable clamps and cable tray support every 1650 mm (Max) on centers.
9. Install new cables in (E) 103mm conduit and route via (E) Vault #2B and (E) Vault #2A.
10. Contractor to provide Cable Tray support every 1.50 meter maximum and per manufacturer recomendation.
11. Contractor to provide expansion fittings or Loops at bridge expansion joints or points of deflection.
12. At Bent 4BA, install cable tray Ladder Dropout and Stainless Steel mesh grip for cable support. See Detail on E-18 for more information.

SCADA/COMM. CABLE REROUTE
TEMPORARY BYPASS STRUCTURE-WEST TIE IN

SCALE: 1:250

E-5

ALL DIMENSIONS ARE IN METERS UNLESS OTHERWISE SHOWN

THIS PLAN ACCURATE FOR ELECTRICAL WORK ONLY

FOR REDUCED PLANS ORIGINAL SCALE IS IN MILLIMETERS 0 20 40 60 80

DGN FILE => T:\13103\SouthDetour\CCO #11-2\Transmit\Final Submittal 20080303\4120R3UA005.dgn
USERNAME => kuojo

CU 04251 EA 0120R3

STATE OF CALIFORNIA - DEPARTMENT OF TRANSPORTATION
Caltrans

DESIGN OVERSIGHT

CALCULATED/DESIGNED BY | B. | DATE | REVISED BY
CHECKED BY | CL | DATE REVISED

DATE PLOTTED => 3/6/2008
TIME PLOTTED => 10:47:22 AM
00-00-00

CONTRACT NO. 04-0120R4

CONTRACT CHANGE ORDER NO 134

SHEET 24 OF 94

NOTES:

1. Reference:
   -for 15kV cable block diagram, see E-10

DIST	COUNTY	ROUTE	KILOMETER POST TOTAL PROJECT	SHEET NO	TOTAL SHEETS
04	SF	80		25	45

Carl Light
REGISTERED ELECTRICAL ENGINEER
3/3/08
DATE

CAROL LIGHT
No. 10145
Exp. 09/30/08
ELECTRICAL
REGISTERED PROFESSIONAL ENGINEER
STATE OF CALIFORNIA

PLANS APPROVAL DATE

PB Americas, Inc.
303 Second St., Suite 700N
San Francisco, CA 94107-1317

SILVERMAN & LIGHT
1201 PARK AVENUE - SUITE 100
EMERYVILLE, CA 94608-3632

The State of California or its officers or agents shall not be responsible for the accuracy or completeness of electronic copies of this plan sheet.

Caltrans now has a web site! To get to the web site, go to http://www.dot.ca.gov

Caltrans Metric

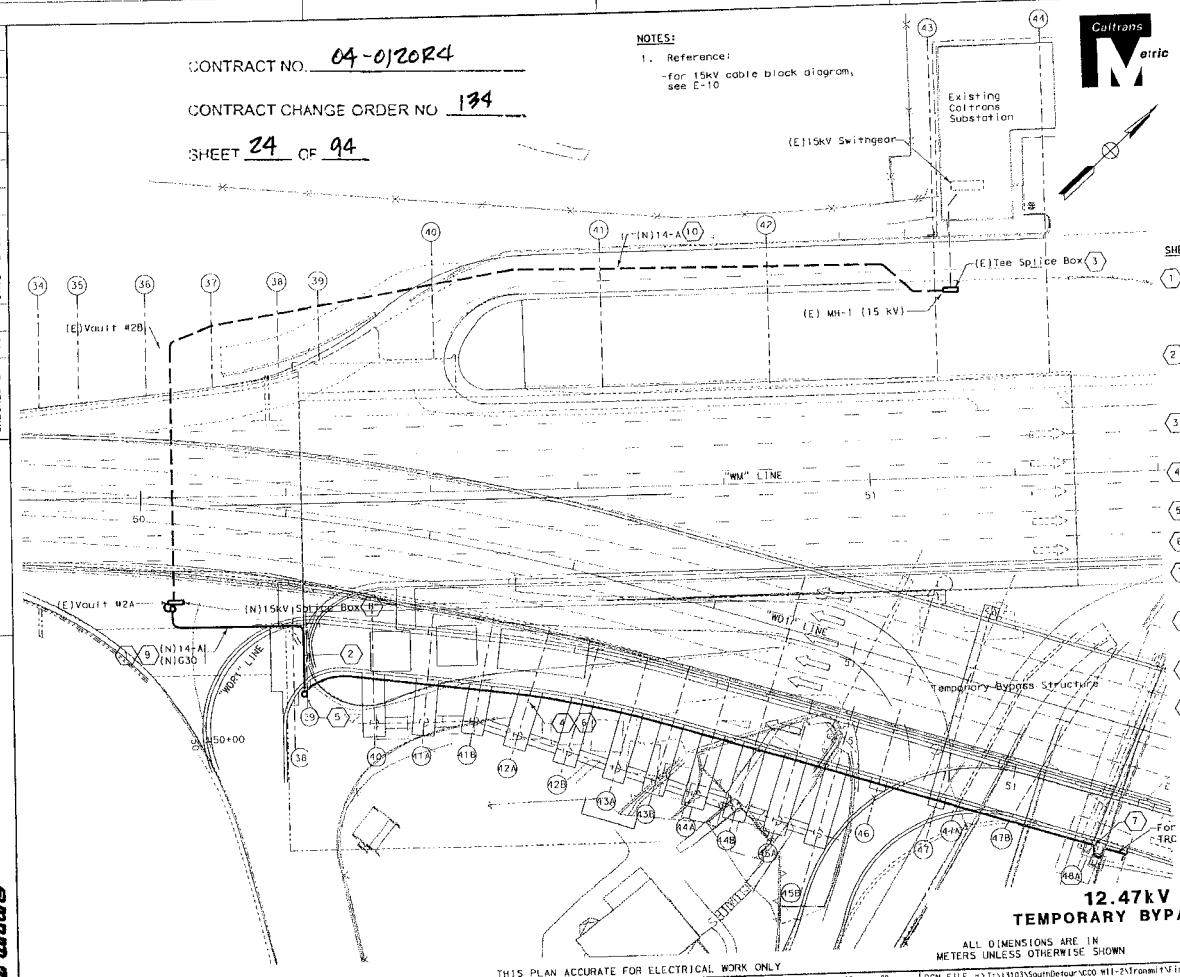

SHEET NOTES:

1. Install new 15kV armored cable in 103 mm conduit from Vault #2A to Cable tray. Route along inside face of existing tunnel wall to (E) 103 mm extension conduits installed from (E) vault #2A. See cable and pull box schedules on Sheet E-8.
2. Transition from tunnel wall to exposed face of retaining wall, then rise to cable tray at south edge of westbound roadway. Provide expansion fittings or loops at bridge expansion joints or points of deflection.
3. Intercept and Splice (E) East Span 15 kV cable and new Temporary 15 kV cable in (E) Tee Splice Box located in (E) MH-1.
4. Refer to schedule "A" on E-8 for new armored cable schedule. Mount new cables on cable tray.
5. Transition to cable tray at the edge of the upper deck structure.
6. Route CKT #G30 together with new cables routed from (E)vault #2A.
7. Provide Ladder Drop out and stainless steel mesh grip for cable support at this location. See Detail on E-18 for more information.
8. Install new 15 kV Splice box with minimum dimensions of 914(W) x 610(H) x 610(D), screw cover type. 12 gauge, Nema 1 galvanized steel front removable cover.
9. Locate and splice (exothermic connection) (E) 500 MCM equipment ground in (E) vault #2A to new CKT #G30.
10. Install new armored cable in (E) 103 mm conduit and route via (E) vault 2B and vault #2A.

12.47kV CABLES REROUTE
TEMPORARY BYPASS STRUCTURE-WEST TIE IN

SCALE: 1:250

E-6

ALL DIMENSIONS ARE IN METERS UNLESS OTHERWISE SHOWN

THIS PLAN ACCURATE FOR ELECTRICAL WORK ONLY

FOR REDUCED PLANS ORIGINAL SCALE IS IN MILLIMETERS 0 20 40 60 80

DGN FILE => T:\s3103\SouthDetour\CCO 911-2\Transmit\Final Submittal 20080303\4120R3DA006.dgn
USERNAME => kuojo

CU 04251 EA 0120R3

DESIGN OVERSIGHT

CALCULATED/ DESIGNED BY: BJ
CHECKED BY: CL

DATE	REVISED BY	DATE REVISED

STATE OF CALIFORNIA - DEPARTMENT OF TRANSPORTATION
Caltrans

DATE PLOTTED => 3/6/2008
TIME PLOTTED => 10:47:45 AM

DIST	COUNTY	ROUTE	KILOMETER POST TOTAL PROJECT	SHEET NO	TOTAL SHEETS
04	SF	80		26	45

Caltrans Metric

Carol Light 3/3/08
REGISTERED ELECTRICAL ENGINEER DATE

PLANS APPROVAL DATE

REGISTERED PROFESSIONAL ENGINEER CAROL LIGHT No. 10145 Exp. 09/30/08 ELECTRICAL STATE OF CALIFORNIA

PB Americas, Inc.
303 Second St., Suite 700N
San Francisco, CA 94107-1317

SILVERMAN & LIGHT
1201 PARK AVENUE - SUITE 400
EMERYVILLE, CA 94608-3632

The State of California or its officers or agents shall not be responsible for the accuracy or completeness of electronic copies of this plan sheet.

Caltrans now has a web site! To get to the web site, go to http://www.dot.ca.gov

NOTE:

1. The Contractor shall verify all controlling field dimensions and submit for engineer approval before ordering or fabricating any material.

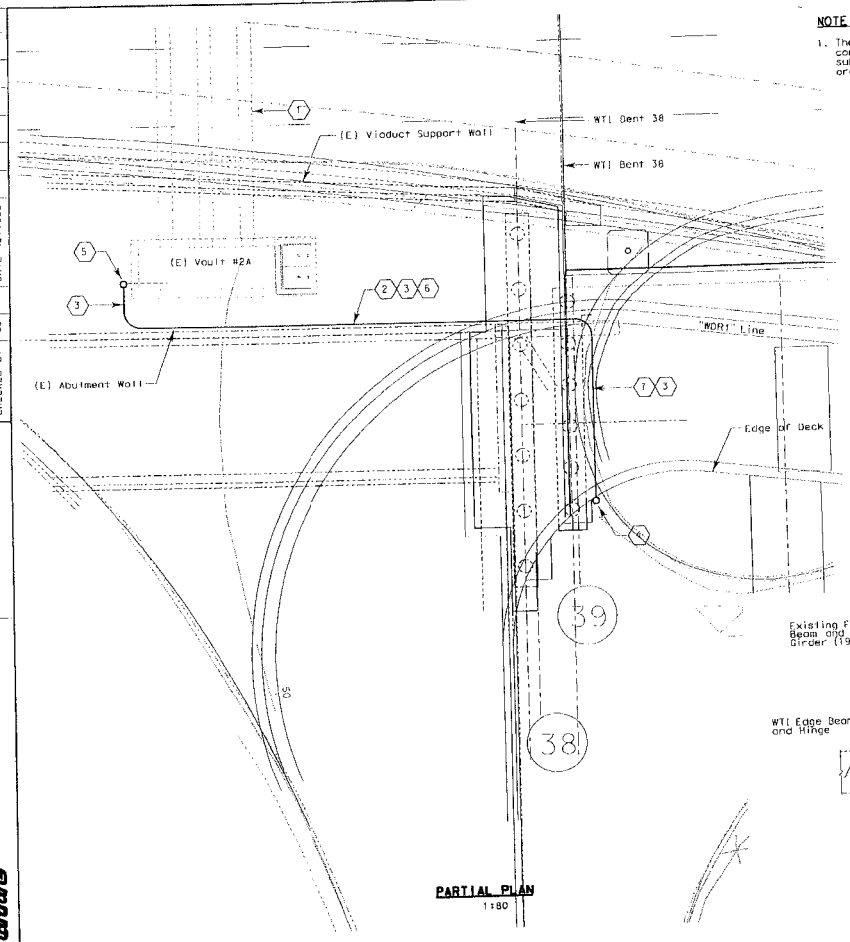

PARTIAL PLAN
1:80

SHEET NOTES:

1. (E) connecting conduits, continuing to Vault #2B.
2. Armored cables and conduit to cable tray to East Span. See cable schedule on Sheet E-8 for quantity and type.
3. See details on sheet E-18 for mounting method.
4. Transition to cable tray at edge of upper deck structure.
5. Existing 103 mm connecting conduits to Vault #2A.
6. Mount Armored Cables and 129C with 15 kV armored cable on the inside face of existing wall.
7. Mount Armored Cables and 103C with 15 kV armored cable on the inside face of new concrete wall.

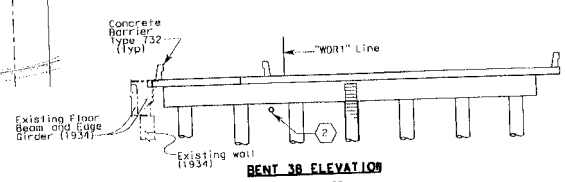

BENT 38 ELEVATION
1:80

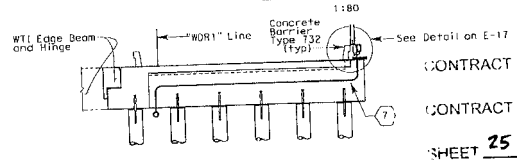

BENT 39 ELEVATION
1:80

CONTRACT NO. 04-0120R4

CONTRACT CHANGE ORDER NO 134

SHEET 25 OF 94

DETAILS
TEMPORARY BYPASS STRUCTURE-WEST TIE IN
SCALE AS NOTED

E-7

ALL DIMENSIONS ARE IN METERS UNLESS OTHERWISE SHOWN

THIS PLAN ACCURATE FOR ELECTRICAL WORK ONLY

FOR REDUCED PLANS ORIGINAL SCALE IS IN MILLIMETERS 0 20 40 60 80

DGN FILE => T:\13103\SouthDetour\CCO Wt-2\Transmit\Final Submittal 20080303\4120R3UA007.dgn
USERNAME => kuojo

CU 04251 EA 0120R3

STATE OF CALIFORNIA - DEPARTMENT OF TRANSPORTATION
Caltrans

DESIGN OVERSIGHT

CALCULATED/DESIGNED BY BJ DATE REVISED BY
CHECKED BY CL DATE REVISED

LAST REVISION 00-00-00 DATE PLOTTED => 3/6/2008 TIME PLOTTED => 10:48:08 AM

DIST	COUNTY	ROUTE	KILOMETER POST TOTAL PROJECT	SHEET No.	TOTAL SHEETS
04	SF	80		27	45

Carol Light 3/3/08
REGISTERED ELECTRICAL ENGINEER DATE

PLANS APPROVAL DATE

REGISTERED PROFESSIONAL ENGINEER CAROL LIGHT No. 10145 Exp. 09/30/08 ELECTRICAL STATE OF CALIFORNIA

PB Americas, Inc.
303 Second St., Suite 700N
San Francisco, CA 94107-1317

SILVERMAN & LIGHT
1201 PARK AVENUE - SUITE 100
EMERYVILLE, CA 94608-3632

The State of California or its officers or agents shall not be responsible for the accuracy or completeness of electronic copies of this plan sheet.

Caltrans now has a web site! To get to the web site, go to http://www.dot.ca.gov

Caltrans Metric

TABLE A - NEW ARMORED CABLE SCHEDULE (2)

CIRCUIT NO. (EXISTING) * 3	DESCRIPTION	NEW CABLE SIZE	NEW CABLE TYPE	EXISTING CABLE SIZE	REMARKS
CKT #14-A	12.47 kV bridge power cable to Pier E-9 substation	3/C #4/0 + G	Armored 15 kV	3-1/C #2/0	
RTU East-A	RTU/Telephone communication cable	50-pr #18	Armored 600 V	50-pr #18	
CKT #241	480V power to Eastbound LD South-East temporary lighting	3/C #6 + G	Armored 600 V	3/C #6 + G	(4)
CKT #242	480V power to Eastbound LD North-East temporary lighting	3/C #6 + G	Armored 600 V	3/C #6 + G	(4)
CKT #243	480V power to Westbound UD South-West temporary lighting	3/C #6 + G	Armored 600 V	3/C #6 + G	(4)
CKT #244	480V power to Westbound UD North-West temporary lighting	3/C #6 + G	Armored 600 V	3/C #6 + G	(5)
CKT #249	480V power to Eastbound South-East temporary sign lighting	3/C #6 + G	Armored 600 V	3/C #6 + G	(4)
DC East-A	DC cable	40-pr #16	Armored 600 V	40-pr #16	
CKT #G30	Equipment ground and bridge tie	1-#500 MCM insulated	600 V	1-#500 MCM insulated	(1)

PULL BOX SCHEDULE (3)

SYSTEM VOLTAGE	MINIMUM DIMENSIONS	INCLUDED CABLE
600 V	610 W x 610 D x 813 H	15-2, SG
12.47 kV	457 W x 610 D x 1000 H	14
300 V & Below	457 W x 457 D x 810 H	15-1

SHEET NOTES:

(1) CKT #G30 should be interconnected in Vault #4. Extend CKT #G30 from Vault #4 to inside YBI substation and connect to ground bar.

(2) Intercept existing circuits shown in table A with new cable.

(3) Pull box dimensions/voltage apply to cables listed in pull Box schedule. Other required pull boxes to be selected according to this table and Standard Specifications

(4) Install and connect new cables from existing circuits #241, #242, #243 and #249 in (F) TB-20E and route to temporary South South detour tower deck lighting circuits.

(5) At (E) LVCC-C located in (E) YBI substation, install and splice new temporary cable for CKT #244-A and route temporary cable to temporary South-South detour UD North-East lighting to remain.

CONTRACT NO. 04-0120R4

CONTRACT CHANGE ORDER NO 134

SHEET 26 OF 94

DETAILS
CABLE AND PULL BOX SCHEDULES
TEMPORARY BYPASS STRUCTURE-WEST TIE IN

NO SCALE

E-8

STATE OF CALIFORNIA - DEPARTMENT OF TRANSPORTATION
Caltrans

DESIGN OVERSIGHT

CALCULATED/DESIGNED BY BJ DATE REVISED BY
CHECKED BY CL DATE REVISED

THIS PLAN ACCURATE FOR ELECTRICAL WORK ONLY

FOR REDUCED PLANS ORIGINAL SCALE IS IN MILLIMETERS 0 20 40 60 80

DGN FILE => I:\13103\SouthDetour\CCO WTI-2\Transmit\Final Submittal 20080303\4120R3UA008.dgn
USERNAME => kuojo

CU 04251 EA 0120R3

DATE PLOTTED => 3/6/2008
TIME PLOTTED => 10:48:32 AM

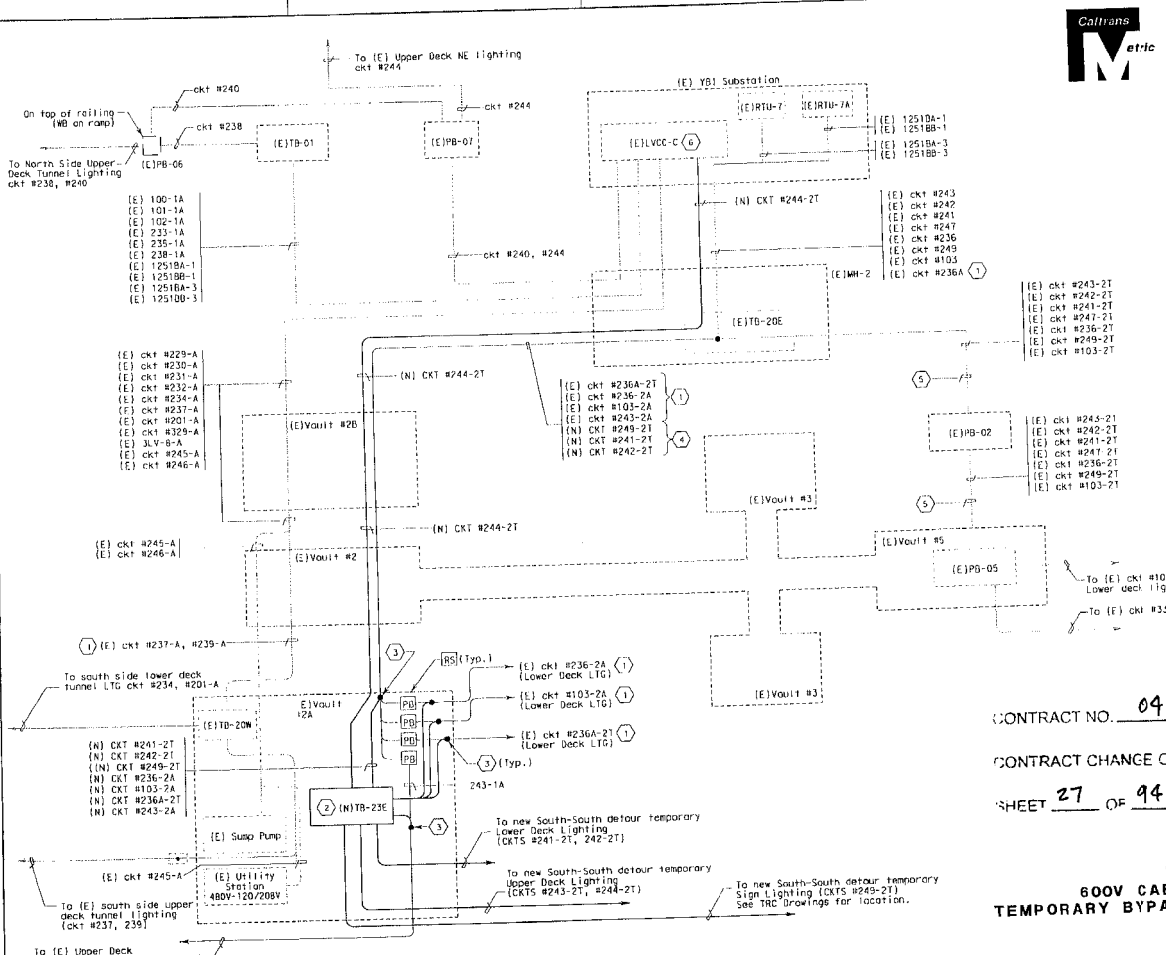

DIST	COUNTY	ROUTE	KILOMETER POST / TOTAL PROJECT	SHEET NO	TOTAL SHEETS
04	SF	80		28	45

Caltrans Metric

Carol Light — REGISTERED ELECTRICAL ENGINEER — 3/4/08 DATE

PLANS APPROVAL DATE

CAROL LIGHT — No. 10145 — Exp. 09/30/08 — ELECTRICAL — STATE OF CALIFORNIA

PB Americas, Inc.
303 Second St., Suite 700N
San Francisco, CA 94107-1317

SILVERMAN & LIGHT
1201 PARK AVENUE - SUITE 100
EMERYVILLE, CA 94608-3632

The State of California or its officers or agents shall not be responsible for the accuracy or completeness of electronic copies of this plan sheet.

Caltrans now has a web site! To get to the web site, go to http://www.dot.ca.gov

SHEET NOTES:

1. Installed during West Tie In Phase 1 Construction(Viaduct Replacement).
2. Contractor shall install (N) TB-23E in (E) Vault #2A.
3. Intercept (E) circuits and extend to (N) TB-23E. Provide (N) cable connector, size as required.
4. Install new South-South detour temporary CKTS #241-2T, #242-2T, and CKT #249-2T.
5. Contractor to disconnect and remove (E) temporary cables when new South-South detour cables are completed.
6. Splice temporary circuit #244-2T to existing ckt 244-A. Provide Nema type 1 splice box as required.

NOTES:

1. Reference:
   - for Cable Schedule, see E-8
   - For 480 V Roadway Lighting Wiring Digram see Sheets E-13 and E-14.

CONTRACT NO. 04-0120R4

CONTRACT CHANGE ORDER NO 134

SHEET 27 OF 94

DETAILS
600V CABLE BLOCK DIAGRAM
TEMPORARY BYPASS STRUCTURE-WEST TIE IN

NO SCALE

E-9

STATE OF CALIFORNIA - DEPARTMENT OF TRANSPORTATION — DESIGN OVERSIGHT — CALCULATED/DESIGNED BY — CHECKED BY — BJ — CL — DATE REVISED — REVISED BY — DATE

THIS PLAN ACCURATE FOR ELECTRICAL WORK ONLY

FOR REDUCED PLANS ORIGINAL SCALE IS IN MILLIMETERS 0 20 40 60 80

DGN FILE => I:\v1\03\SouthDetour\CCO WE1-2\Transit\Final Submittal 20080303\4120R3DA099.dgn
USERNAME => kuojo

CU 04251 EA 0120R3

LAST REVISED => 00-00-00
DATE PLOTTED => 3/6/2008
TIME PLOTTED => 10:48:48 AM

DIST	COUNTY	ROUTE	KILOMETER POST TOTAL PROJECT	SHEET No.	TOTAL SHEETS
04	SF	80		29	45

Carol Light 3/3/08
REGISTERED ELECTRICAL ENGINEER DATE

PLANS APPROVAL DATE

REGISTERED PROFESSIONAL ENGINEER CAROL LIGHT No. 10145 Exp. 09/30/08 ELECTRICAL STATE OF CALIFORNIA

PB Americas, Inc.
303 Second St., Suite 700N
San Francisco, CA 94107-1317

SILVERMAN & LIGHT
1201 PARK AVENUE - SUITE 100
EMERYVILLE, CA 94608-3632

The State of California or its officers or agents shall not be responsible for the accuracy or completeness of electronic copies of this plan sheet.

Caltrans now has a web site! To get to the web site, go to http://www.dot.ca.gov

Caltrans Metric

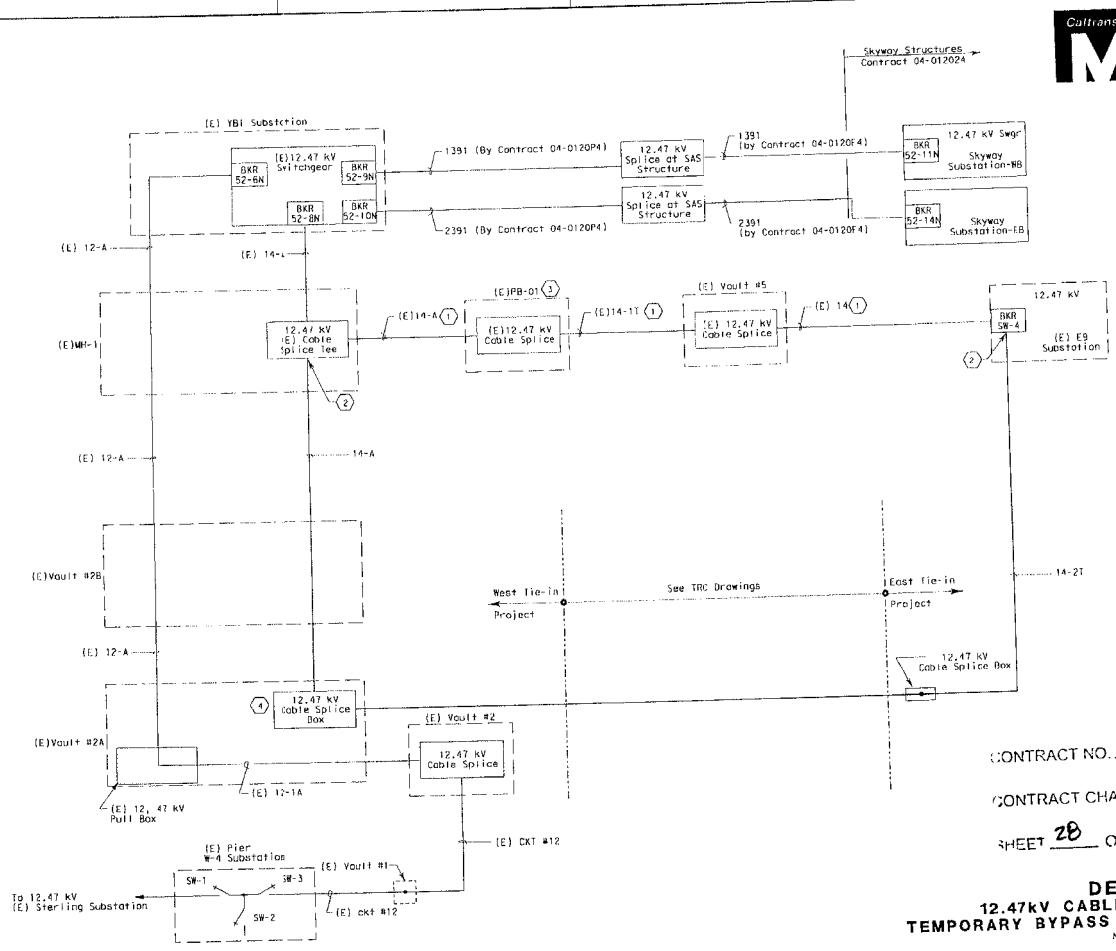

SHEET NOTES:

1. Contractor shall disconnect and remove temporary cable when the new temporary installation of South-South detour cables from (E)sw-4 in (F) E9 Substation is completed
2. Intercept and Splice (E) East Span 15 kV cable and new Temporary East Span 15 kV cable temporary as shown.
3. PB-01 is mounted on the north retaining wall near Bent 50.
4. Install new 914 (W) x 610(H) x 610(D) 15 kV splice box, screw cover type, 12 gauge, Nema 1 galvanized steel, front removable cover.

NOTES:

1. References:
   - For locations of vaults, manholes and TB's, see sheet E-5
   - For cable schedule, and pull box schedule see sheet E-8

CONTRACT NO. 04-0120R4

CONTRACT CHANGE ORDER NO 134

SHEET 28 OF 94

DETAILS
12.47kV CABLE BLOCK DIAGRAM
TEMPORARY BYPASS STRUCTURE-WEST TIE IN

NO SCALE

E-10

STATE OF CALIFORNIA - DEPARTMENT OF TRANSPORTATION

Caltrans

DESIGN OVERSIGHT

CALCULATED/DESIGNED BY | BJ | DATE | REVISED BY
CHECKED BY | CL | DATE REVISED

THIS PLAN ACCURATE FOR ELECTRICAL WORK ONLY

FOR REDUCED PLANS ORIGINAL SCALE IS IN MILLIMETERS 0 20 40 60 80

DGN FILE => I:\13103\SouthDetour\CCO #11-2\Transmit\Final Submittal 20080303\4120R3UA010.dgn
USERNAME => kuojo
CU 04251
EA 0120R3

LAST REVISION 00-00-00
DATE PLOTTED => 3/6/2008
TIME PLOTTED => 10:49:07 AM

DIST	COUNTY	ROUTE	KILOMETER POST TOTAL PROJECT	SHEET No.	TOTAL SHEETS
04	SF	80		30	45

Caltrans Metric

Carol Lique 3/3/08
REGISTERED ELECTRICAL ENGINEER DATE

PLANS APPROVAL DATE

REGISTERED PROFESSIONAL ENGINEER CAROL LIQUE No. 10145 Exp. 09/30/08 ELECTRICAL STATE OF CALIFORNIA

PB Americas, Inc.
303 Second St., Suite 700N
San Francisco, CA 94107-1317

SILVERMAN & LIGHT
1201 PARK AVENUE - SUITE 100
EMERYVILLE, CA 94608-3632

The State of California or its officers or agents shall not be responsible for the accuracy or completeness of electronic copies of this plan sheet.

Caltrans now has a web site! To get to the web site, go to http://www.dot.ca.gov

CONTRACT NO. 04-0120R4

CONTRACT CHANGE ORDER NO 134

SHEET 29 OF 94

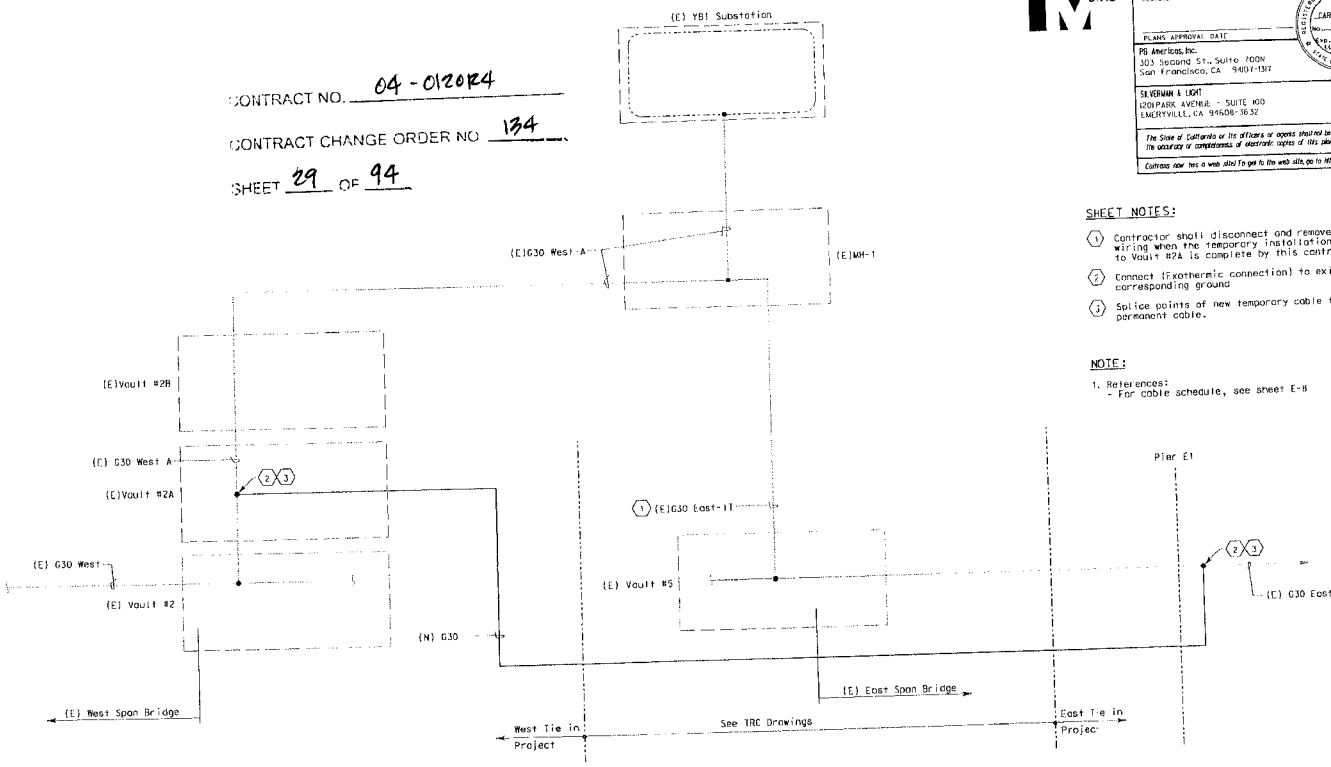

SHEET NOTES:

1. Contractor shall disconnect and remove temporary wiring when the temporary installation of cables to Vault #2A is complete by this contract.
2. Connect (Exothermic connection) to existing corresponding ground
3. Splice points of new temporary cable to existing permanent cable.

NOTE:

1. References:
   - For cable schedule, see sheet E-8

GROUND CONDUCTOR BLOCK DIAGRAM

DETAILS
GROUND CONDUCTOR BLOCK DIAGRAM
TEMPORARY BYPASS STRUCTURE-WEST TIE IN

NC SCALE

E-11

STATE OF CALIFORNIA - DEPARTMENT OF TRANSPORTATION

Caltrans

DESIGN OVERSIGHT

CALCULATED/ DESIGNED BY	BJ	DATE	REVISED BY
CHECKED BY	CL		DATE REVISED

THIS PLAN ACCURATE FOR ELECTRICAL WORK ONLY

FOR REDUCED PLANS ORIGINAL SCALE IS IN MILLIMETERS 0 20 40 60 80

DGN FILE => I:\13103\SouthDetour\CCO WTI-2\Transmit\Final Submittal 20080303\4120R3UA011.dgn
USERNAME => kuoja

CU 04251

EA 0120R3

LAST REVISION 00-00-00

DATE PLOTTED => 3/6/2008
TIME PLOTTED => 10:49:25 AM

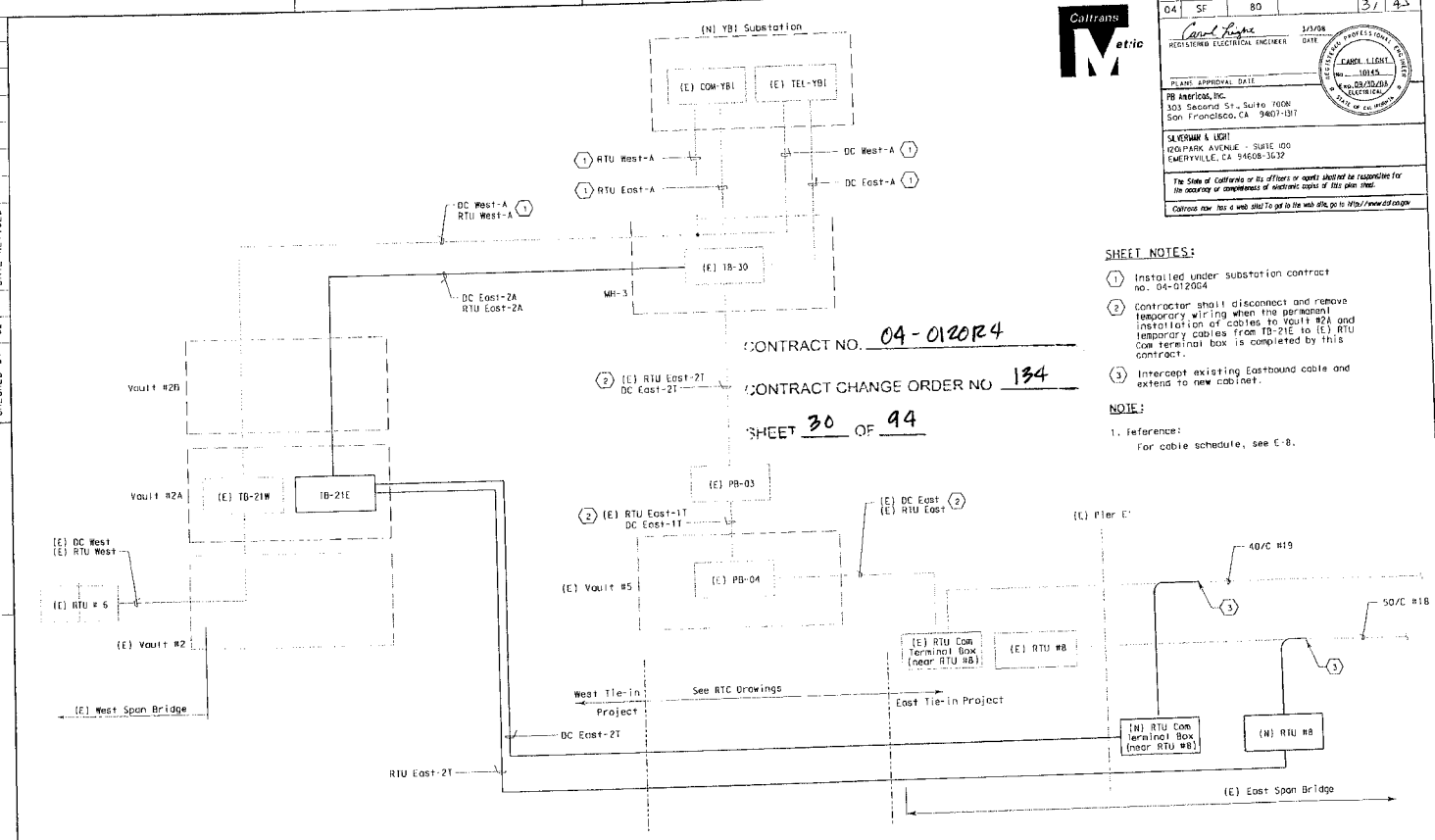

SCADA AND COMMUNICATION BLOCK DIAGRAM

CONTRACT NO. 04-0120R4

CONTRACT CHANGE ORDER NO 134

SHEET 30 OF 94

SHEET NOTES:

1. Installed under substation contract no. 04-0120G4
2. Contractor shall disconnect and remove temporary wiring when the permanent installation of cables to Vault #2A and temporary cables from TB-21E to (E) RTU Com terminal box is completed by this contract.
3. Intercept existing Eastbound cable and extend to new cabinet.

NOTE:

1. Reference:
   For cable schedule, see E-8.

DIST	COUNTY	ROUTE	KILOMETER POST TOTAL PROJECT	SHEET NO	TOTAL SHEETS
04	SF	80		31	45

Carol Light 1/31/08
REGISTERED ELECTRICAL ENGINEER DATE

PLANS APPROVAL DATE

REGISTERED PROFESSIONAL ENGINEER CAROL LIGHT No. 10145 Exp. 09/30/08 ELECTRICAL STATE OF CALIFORNIA

PB Americas, Inc.
303 Second St., Suite 700N
San Francisco, CA 94107-1317

SILVERMAN & LIGHT
1210 PARK AVENUE - SUITE 100
EMERYVILLE, CA 94608-3632

The State of California or its officers or agents shall not be responsible for the accuracy or completeness of electronic copies of this plan sheet.

Caltrans now has a web site! To get to the web site, go to: http://www.dot.ca.gov

DESIGN OVERSIGHT
CALCULATED/DESIGNED BY
CHECKED BY
DATE REVISED BY
DATE REVISED

STATE OF CALIFORNIA - DEPARTMENT OF TRANSPORTATION
Caltrans

DETAILS
SCADA AND COMMUNICATION CABLE BLOCK DIAGRAM
TEMPORARY BYPASS STRUCTURE-WEST TIE IN
NO SCALE

E-12

THIS PLAN ACCURATE FOR ELECTRICAL WORK ONLY
FOR REDUCED PLANS ORIGINAL SCALE IS IN MILLIMETERS 0 20 40 60 80

DGN FILE => T:\13103\SouthDetour\ECO WE-2\Transmit\Final Submittal 20080303\4120R3UA012.dgn
USERNAME => kuojo

CU 04251 EA 0120R3

DRAWING DATE PLOTTED => 3/6/2008
TIME PLOTTED => 10:45:52 AM

DIST	COUNTY	ROUTE	KILOMETER POST TOTAL PROJECT	SHEET NO	TOTAL SHEETS
04	SF	80		32	45

Caltrans Metric

REGISTERED ELECTRICAL ENGINEER 3/3/08 DATE

PLANS APPROVAL DATE

REGISTERED PROFESSIONAL ENGINEER CAROL LIGHT No. 10145 Exp. 09/30/08 ELECTRICAL STATE OF CALIFORNIA

PB Americas, Inc.
303 Second St., Suite 700N
San Francisco, CA 94107-1317

SILVERMAN & LIGHT
1201 PARK AVENUE - SUITE 100
EMERYVILLE, CA 94608-3632

The State of California or its officers or agents shall not be responsible for the accuracy or completeness of electronic copies of this plan sheet.

Caltrans now has a web site! To get to the web site, go to http://www.dot.ca.gov

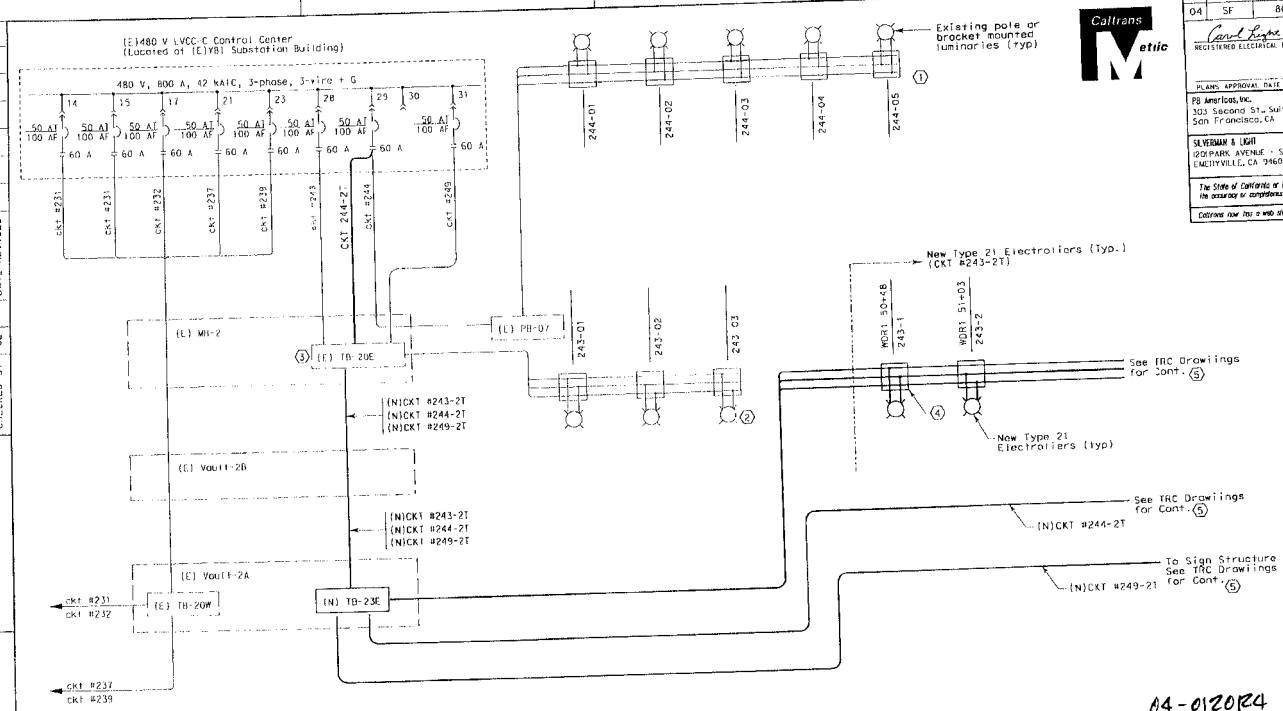

CONTRACT NO. 04-0120R4

CONTRACT CHANGE ORDER NO 134

SHEET 31 OF 94

SHEET NOTES:

1. Existing Luminaires 244-06 through 244-17 to be removed in bridge demolition (Westbound North).
2. Existing Luminaires 243-04 through 243-18 to be removed in bridge demolition (Westbound South).
3. Intercept circuits #243, #244 and #249 in MH-2. Route on bypass structure via (E) vault 2A and reconnect to cables supplying luminaires to remain.
4. Fused splice connectors to be used for each ungrounded conductors between line and ballast (Typical).
5. (N) armored Cables on Cable Tray to East Span.

NOTES:

1. Reference:
   - For Cable Schedule, see E-8

DETAILS
TEMPORARY BYPASS STRUCTU-WEST TIE IN WESTBOUND LIGHTING DIAGRAM

NO SCALE

E-13

STATE OF CALIFORNIA - DEPARTMENT OF TRANSPORTATION

Caltrans

DESIGN OVERSIGHT

CALCULATED/DESIGNED BY BJ DATE REVISED BY

CHECKED BY CL DATE REVISED

THIS PLAN ACCURATE FOR ELECTRICAL WORK ONLY

FOR REDUCED PLANS ORIGINAL SCALE IS IN MILLIMETERS 0 20 40 60 80

DGN FILE => T:\13103\SouthDetour\CCO W11-2\Ironsmith\Final Submittal 20080303\4120R3MA013.dgn
USERNAME => kuojo

CU 04251 EA 0120R3

LAST REVISION 00-00-00 DATE PLOTTED => 3/6/2008 TIME PLOTTED => 10:50:12 AM

DIST	COUNTY	ROUTE	KILOMETER POST TOTAL PROJECT	SHEET No	TOTAL SHEETS
04	SF	80			

REGISTERED ELECTRICAL ENGINEER — DATE 03/03/08

PLANS APPROVAL DATE

Caltrans Engineer

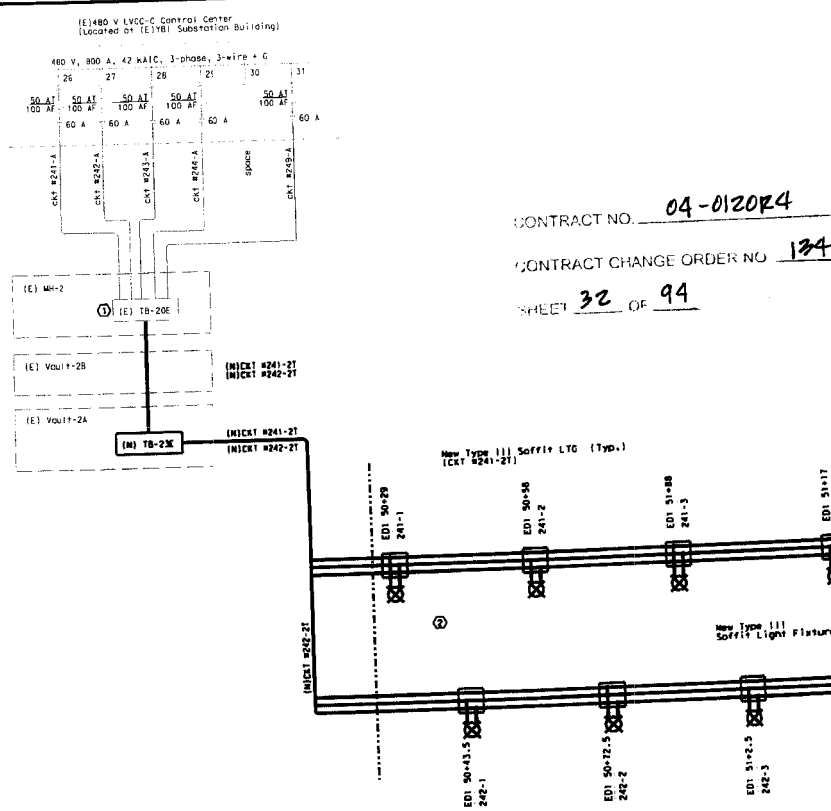

CONTRACT NO. 04-0120R4

CONTRACT CHANGE ORDER NO 134

SHEET 32 OF 94

SHEET NOTES:

1. Intercept circuits #241-2T, and CKT#242 in MH-2. Route on bypass structure via (E) vault #2A and reconnect to cables supplying luminaires to remain.
2. Fused splice connectors to be used for each ungrounded conductors between line and ballast (Typical).
3. New armored Cables to Cable Tray to East Span.

NOTES:

1. Reference:
   - For Cable Schedule, see E-8

DETAILS
TEMPORARY BYPASS STRUCTURE-WEST TIE IN EASTBOUND LIGHTING DIAGRAM

NO SCALE

E-14R1

THIS PLAN ACCURATE FOR ELECTRICAL WORK ONLY

FOR REDUCED PLANS ORIGINAL SCALE IS IN MILLIMETERS

DGN FILE => $REQUEST
USERNAME => $USER

CU 04251

EA 0120R3

DATE PLOTTED => $DATE
TIME PLOTTED => $TIME

00-00-00

C:\ETIWTI\4120R3ua14R1.dgn 11/26/2008 09:04:45 AM

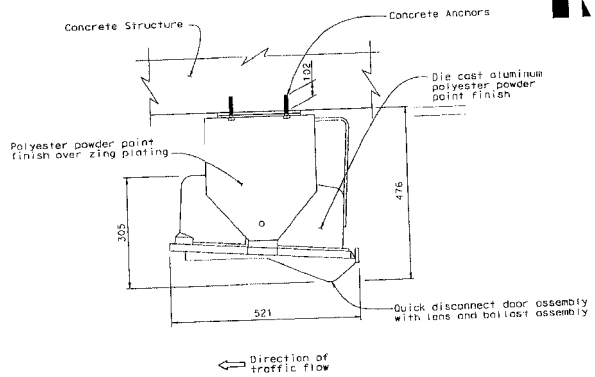

EASTBOUND SOFFIT LUMINAIRE MOUNTING DETAIL

SCALE: 1:100

Notes:

1. The Contractor is to verify all controlling field dimensions before ordering or fabricating any material.
2. Fabricate bracket clips and brace from A36 steel grind sharp edges, hot dip galvanized.
3. See Structural plans for additional mounting detail and specifications.

DIST	COUNTY	ROUTE	KILOMETER POST TOTAL PROJECT	SHEET NO.	TOTAL SHEETS
04	SF	80		34	45

Carol Light 3/1/08
REGISTERED ELECTRICAL ENGINEER DATE

PLANS APPROVAL DATE

CAROL LIGHT No. 10145 Exp. 09/30/08 ELECTRICAL REGISTERED PROFESSIONAL ENGINEER STATE OF CALIFORNIA

PB Americas, Inc.
303 Second St., Suite 700N
San Francisco, CA 94107-1317

SEVERUDD & LIGHT
1001 PARK AVENUE - SUITE 100
EMERYVILLE, CA 94608-3632

The State of California or its officers or agents shall not be responsible for the accuracy or completeness of electronic copies of this plan sheet.

Caltrans now has a web site! To get to the web site, go to http://www.dot.ca.gov

CONTRACT NO. 04-0120R4

CONTRACT CHANGE ORDER NO 134

SHEET 33 OF 94

TEMPORARY LIGHTING DETAILS
TEMPORARY BYPASS STRUCTURE-WEST TIE IN
SCALE AS NOTED

E-15

ALL DIMENSIONS ARE IN MILLIMETERS UNLESS OTHERWISE SHOWN

THIS PLAN ACCURATE FOR ELECTRICAL WORK ONLY

FOR REDUCED PLANS ORIGINAL SCALE IS IN MILLIMETERS 0 20 40 60 80

DGN FILE => T:\1310\SouthDetour\CCO WE1-2\Transmitt\Final Submittal 20080303\4120R3UA015.dgn
USERNAME => huojo

CU 04251 EA 0120R3

LAST REVISED 00-00-00
DATE PLOTTED => 3/6/2008
TIME PLOTTED => 10:50:46 AM

STATE OF CALIFORNIA - DEPARTMENT OF TRANSPORTATION
Caltrans
DESIGN OVERSIGHT
CALCULATED/DESIGNED BY BJ
CHECKED BY CL
DATE REVISED
REVISED BY
DATE

DIST	COUNTY	ROUTE	KILOMETER POST / TOTAL PROJECT	SHEET NO	TOTAL SHEETS
04	SF	80		35	45

Carol Lupe — REGISTERED ELECTRICAL ENGINEER — 3/3/08 DATE

CAROL J. LUPE — No. 10145 — Exp. 09/30/08 — ELECTRICAL — REGISTERED PROFESSIONAL ENGINEER — STATE OF CALIFORNIA

PLANS APPROVAL DATE

PB Americas, Inc.
303 Second St., Suite 700N
San Francisco, CA 94107-1517

SILVERMAN & LIGHT
1201 PARK AVENUE - SUITE 100
EMERYVILLE, CA 94608 3632

The State of California or its officers or agents shall not be responsible for the accuracy or completeness of electronic copies of this plan sheet.

Caltrans now has a web site! To get to the web site, go to http://www.dot.ca.gov

CONTRACT NO. 04-0120R4

CONTRACT CHANGE ORDER NO. 134

SHEET 34 OF 94

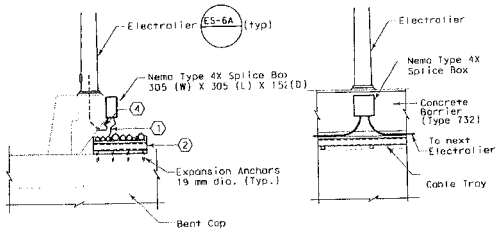

TYPICAL SECTION AT BENT — SCALE: NONE

ELEVATION — SCALE: NONE

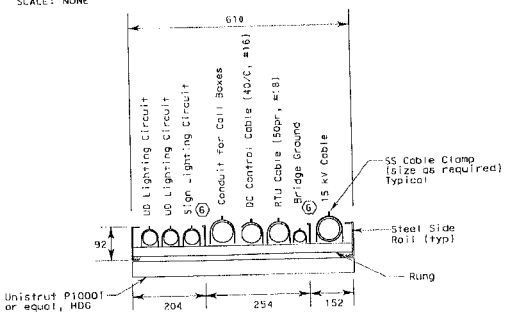

CABLE TRAY LAYOUT

SCALE: 1:5

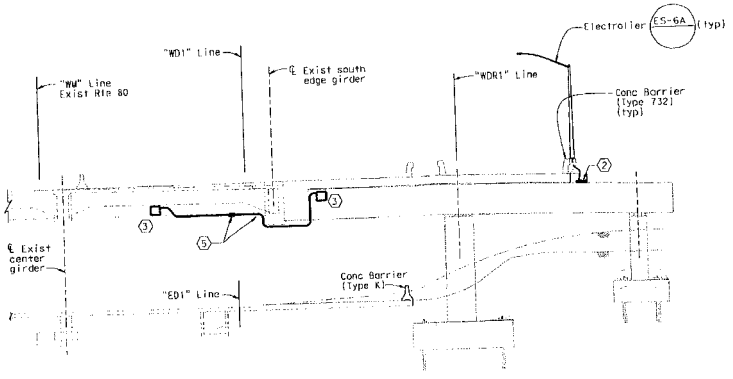

SECTION AT BENT 43

SHEET NOTES:

1. Route lighting circuits in cable tray. Provide pull boxes and activation at electroliers as needed per standard specifications. See plan views for electrolier and pull box locations.
2. Route remaining cables in cable tray. Secure to top of structural post or cantilever from bottom of girder. Provide and install pull boxes and termination boxes as shown and as needed by field conditions. See Detail on this sheet and sheet E-17.
3. Install Pendant Soffit Luminaire per Standard Plans ES-9E and ES-10.
4. Install 27C conduit from center of pole base to bottom of barrier electrolier support. Install 27C conduit with conductors and drip loop to junction box containing fused splice connectors.
5. Conduit and pull boxes, per sheet E-4 (typ).
6. Cable tray fixed solid barrier to create separation between 15 kV, 600V, and Control Cables. Barriers and accessories to be the same manufacturer as tray system.

LIGHTING DETAILS
TEMPORARY BYPASS STRUCTURE-WEST TIE IN

SCALE AS NOTED

E-16

ALL DIMENSIONS ARE IN METERS UNLESS OTHERWISE SHOWN

THIS PLAN ACCURATE FOR ELECTRICAL WORK ONLY

FOR REDUCED PLANS ORIGINAL SCALE IS IN MILLIMETERS — 0 20 40 60 80

DGN FILE => I:\I3103\SouthDetour\CCO #11-2\Transmit\Final Submittal 20080303\4120R3UA016.dgn
USERNAME => kuojo

CU 04251 EA 0120R3

DATE PLOTTED => 3/6/2008
TIME PLOTTED => 10:15:05 AM

STATE OF CALIFORNIA - DEPARTMENT OF TRANSPORTATION — DESIGN OVERSIGHT

CALCULATED/DESIGNED BY | DATE | REVISED BY
CHECKED BY | DATE REVISED

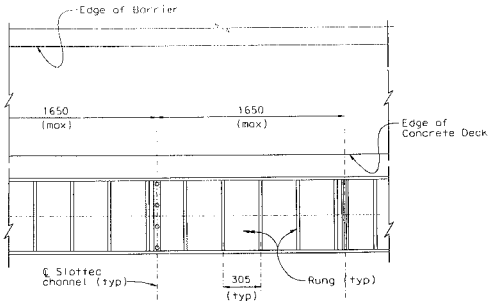

PLAN

1:15

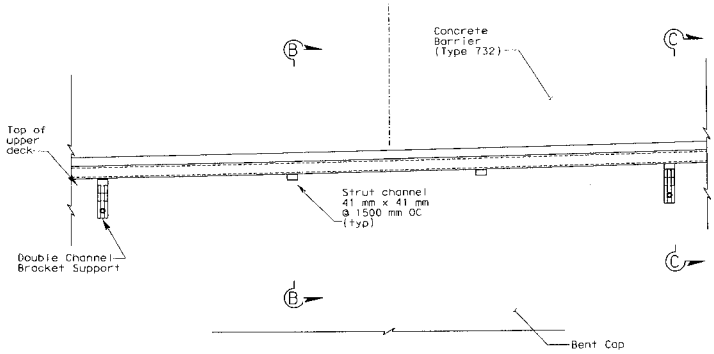

PARTIAL ELEVATION

SCALE: NONE

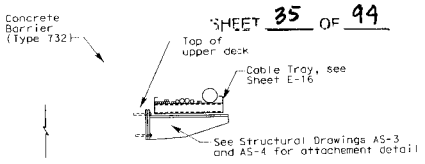

SECTION C-C

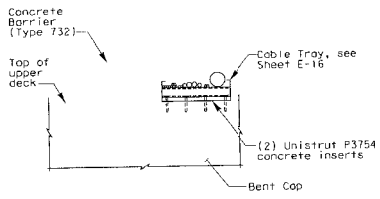

SECTION B-B

CABLE TRAY MOUNTING DETAILS

Caltrans Metric

14 SF BG

Carol Light 03/03/08

CAROL LIGHT No. 10145 exp.09/30/08 ELECTRICAL

PB Americas, Inc.
101 Second St., Suite 1000
San Francisco, CA 94105 357

SILVERMAN & LIGHT
CONTRACT AVENUE SUITE 810
EMERYVILLE, CA 94608 3632

The State of California or its officers or agents shall not be responsible for the accuracy or completeness of electronic copies of this plan sheet.

Caltrans now has a web site! To get to the web site, go to http://www.dot.ca.gov

CONTRACT NO. 04-0120R4

CONTRACT CHANGE ORDER NO 134

SHEET 35 OF 94

CABLE TRAY MOUNTING DETAILS
TEMPORARY BYPASS STRUCTURE-WEST TIE IN

SCALE AS NOTED

E-17

STATE OF CALIFORNIA - DEPARTMENT OF TRANSPORTATION
Caltrans
DESIGN OVERSIGHT
CALCULATED/DESIGNED BY
CHECKED BY
DATE REVISED
BJ
CL
DATE REVISED BY

THIS PLAN ACCURATE FOR ELECTRICAL WORK ONLY

FOR REDUCED PLANS ORIGINAL SCALE IS IN MILLIMETERS 0 20 40 60 80

DGN FILE <> $REQUEST
USERNAME = > $USER

CU 04251

EA 0120R3

DATE PLOTTED => 07/17/2008
TIME PLOTTED => 07:19:00

DIST	COUNTY	ROUTE	KILOMETER POST TOTAL PROJECT	SHEET NO.	TOTAL SHEETS
04	SF	80		37	45

Caltrans Metric

Carol Light 3/1/08
REGISTERED ELECTRICAL ENGINEER DATE

PLANS APPROVAL DATE

CAROL LIGHT No. 10145 Exp. 08/30/08 ELECTRICAL — REGISTERED PROFESSIONAL ENGINEER — STATE OF CALIFORNIA

PB Americas, Inc.
303 Second St., Suite 700N
San Francisco, CA 94107-1317

SILVERMAN & LIGHT
1201 PARK AVENUE - SUITE 100
EMERYVILLE, CA 94608-3632

The State of California or its officers or agents shall not be responsible for the accuracy or completeness of electronic copies of this plan sheet.

Caltrans now has a web site! To get to the web site, go to: http://www.dot.ca.gov

CONTRACT NO. 04-0120R4

CONTRACT CHANGE ORDER NO. 134

SHEET 36 OF 94

Item No.	Description
(A)	Expansion anchor, 13 mm dia, 89 mm depth embedment and allowable load (in tension) of 4.45 kN
(B)	Strut transverse brace for seismic support
(C)	Hinged seismic bracket with retaining clip
(D)	Strut channel, 41 mm x 82 mm
(E)	Threaded rod (13 mm) with stiffener & stiffener clips
(F)	Rod coupler, hex nut and washer for expansion anchor

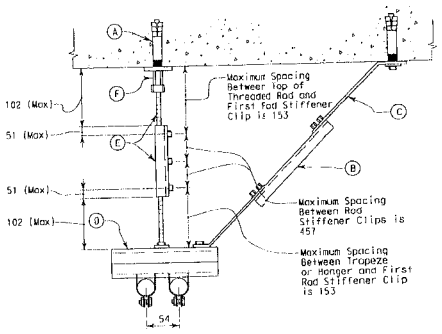

DETAIL 1
ARMORED CABLE MOUNTING DETAIL
NO SCALE

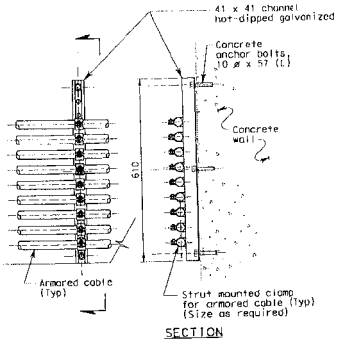

SECTION

DETAIL 2
ARMORED CABLE MOUNTING DETAIL
NO SCALE

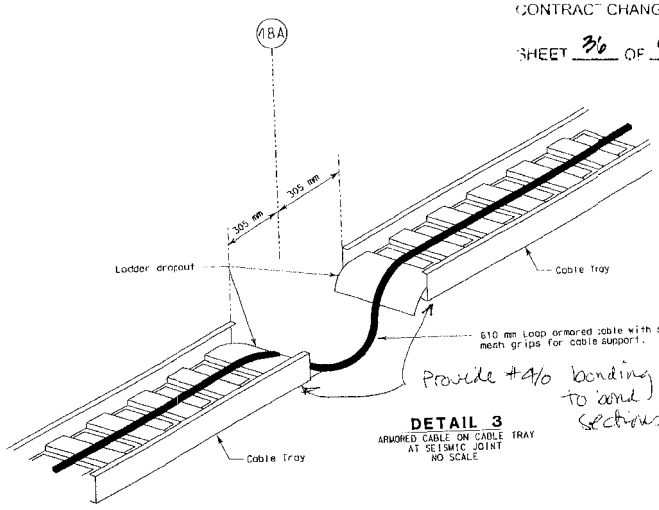

DETAIL 3
ARMORED CABLE ON CABLE TRAY AT SEISMIC JOINT
NO SCALE

DETAILS
NEW CABLE SUPPORT SECTIONS AND DETAILS TEMPORARY BYPASS STRUCTURE-WEST TIE IN
NO SCALE

E-18

STATE OF CALIFORNIA -- DEPARTMENT OF TRANSPORTATION
DESIGN OVERSIGHT
CALCULATED/DESIGNED BY BJ
CHECKED BY CL
DATE REVISED BY
DATE REVISED

THIS PLAN ACCURATE FOR ELECTRICAL WORK ONLY
FOR REDUCED PLANS ORIGINAL SCALE IS IN MILLIMETERS 0 20 40 60 80
DGN FILE => I:\i3103\SouthDetour\CCO WT1-2\Transit\Final Submittal 20080303\4120R3UA018.dgn
USERNAME => kwolo
CU 04251 EA 0120R3

LAST REVISION DATE PLOTTED => 3/6/2008
00-00-00 TIME PLOTTED => 10:51:50 AM

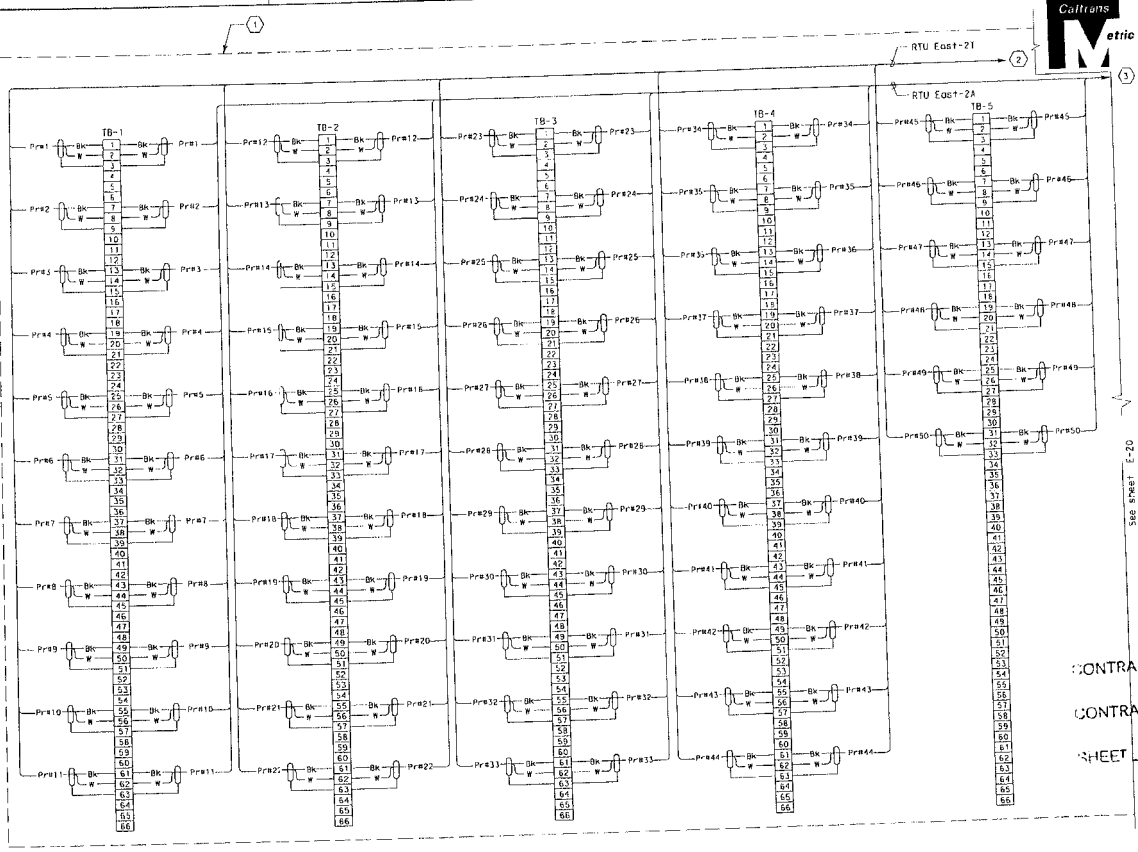

DIST	COUNTY	ROUTE	KILOMETER POST TOTAL PROJECT	SHEET No	TOTAL SHEETS
04	SF	80		38	45

Carol Light
REGISTERED ELECTRICAL ENGINEER
3/1/08
DATE

REGISTERED PROFESSIONAL ENGINEER
CAROL LIGHT
No. 10145
Exp. 09/30/08
ELECTRICAL
STATE OF CALIFORNIA

PLANS APPROVAL DATE

PB Americas, Inc.
303 Second St., Suite 700N
San Francisco, CA 94107-1317

SILVERMAN & LIGHT
1201 PARK AVENUE - SUITE 100
EMERYVILLE, CA 94608-3632

The State of California or its officers or agents shall not be responsible for the accuracy or completeness of electronic copies of this plan sheet.

Caltrans now has a web site! To get to the web site, go to http://www.dot.ca.gov

SHEET NOTES:

1. (N) TB-21E is located in (E) Vault #2A.
2. To (E) RTU Com terminal Box near RTU #8 and connect.
3. To (E) TB-30 in MH-3. See sheet E-12.

NOTES:

1. References:
   - For SCADA and Communication cable block diagram, see sheet E-12.

CONTRACT NO. 04-0120R4

CONTRACT CHANGE ORDER NO 134

SHEET 37 OF 94

SCADA AND COMMUNICATION TERMINAL BOX TB-21E

DETAILS
TERMINAL BOX TB-21E CONNECTION DIAGRAM
TEMPORARY BYPASS STRUCTURE-WEST TIE IN

NO SCALE

E-19

STATE OF CALIFORNIA - DEPARTMENT OF TRANSPORTATION
Caltrans

DESIGN OVERSIGHT
CALCULATED/DESIGNED BY | BJ | DATE | REVISED BY
CHECKED BY | CL | DATE REVISED

THIS PLAN ACCURATE FOR ELECTRICAL WORK ONLY

FOR REDUCED PLANS ORIGINAL SCALE IS IN MILLIMETERS 0 20 40 60 80

DGN FILE => T:\13103\SouthDetour\CCO #11-2\Transmit\Final Subsitial 20080303\4120R3UA019.dgn
USERNAME => kuojo

CU 04251

EA 0120R3

DATE PLOTTED => 3/6/2008
TIME PLOTTED => 10:53:28 AM
00-00-00

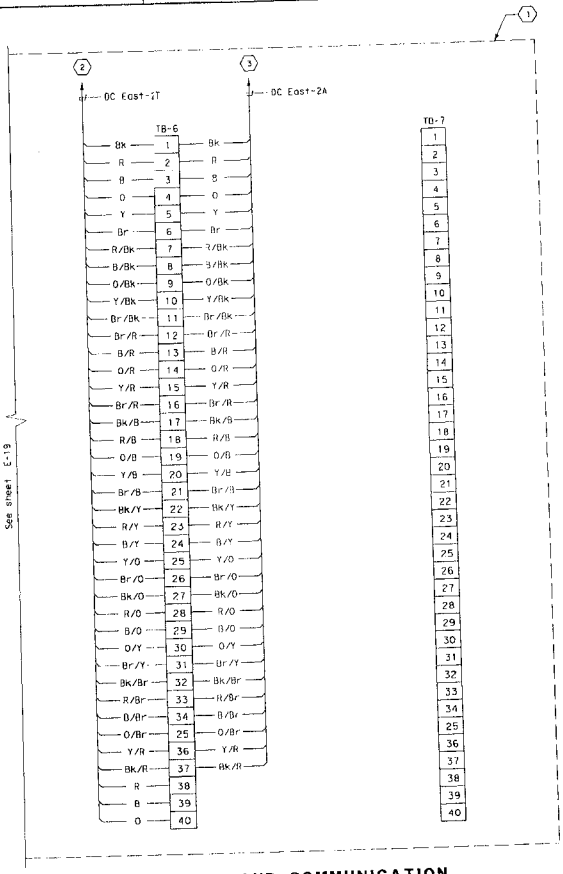

SCADA AND COMMUNICATION TERMINAL BOX TB-21E

Caltrans Metric

DIST	COUNTY	ROUTE	KILOMETER POST TOTAL PROJECT	SHEET NO	TOTAL SHEETS
04	SF	80		37	45

Carol Light — REGISTERED ELECTRICAL ENGINEER — 1/1/08 DATE

CAROL LIGHT No. 10145 Exp. 09/30/08 ELECTRICAL — REGISTERED PROFESSIONAL ENGINEER — STATE OF CALIFORNIA

PLANS APPROVAL DATE

PB Americas, Inc.
303 Second St., Suite 700N
San Francisco, CA 94107-1317

SILVERMAN & LIGHT
1201 PARK AVENUE - SUITE 100
EMERYVILLE, CA 94608-3637

The State of California or its officers or agents shall not be responsible for the accuracy or completeness of electronic copies of this plan sheet.

Caltrans now has a web site! To get to the web site, go to http://www.dot.ca.gov

SHEET NOTES:

1. (N) TB-21E is located in (E) Vault #2A.
2. To (E) RTU Com Terminal Box near RTU #8 and connect.
3. To (E) TB-30 in MH-3. See sheet E-12.

NOTES:

1. References:
   - For SCADA and Communication cable block diagram, see sheet E-12.

CONTRACT NO. 04-0120R4

CONTRACT CHANGE ORDER NO 174

SHEET 38 OF 94

DETAILS
TERMINAL BOX TB-21E CONNECTION DIAGRAM TEMPORARY BYPASS STRUCTURE-WEST TIE IN

NO SCALE

E-20

STATE OF CALIFORNIA - DEPARTMENT OF TRANSPORTATION — Caltrans

DESIGN OVERSIGHT

CALCULATED/DESIGNED BY BJ — DATE

CHECKED BY CL

REVISED BY — DATE REVISED

LAST REVISION 00-00-00 — DATE PLOTTED => 3/6/2008 — TIME PLOTTED => 10:53:49 AM

THIS PLAN ACCURATE FOR ELECTRICAL WORK ONLY

FOR REDUCED PLANS ORIGINAL SCALE IS IN MILLIMETERS 0 20 40 60 80

DGN FILE => T:\13103\SouthBetaur\CCO RTI-2\Transmittal\Final Submittal 20080303\4120R3UA020.dgn
USERNAME => kuojo

CU 04251 EA 0120R3

DIST	COUNTY	ROUTE	KILOMETER POST TOTAL PROJECT	SHEET NO	TOTAL SHEETS
04	SF	80		40	45

Caltrans Metric

Carol Light
REGISTERED ELECTRICAL ENGINEER
3/3/08
DATE

REGISTERED PROFESSIONAL ENGINEER
CAROL LIGHT
No. 10145
EXP. 09/30/08
ELECTRICAL
STATE OF CALIFORNIA

PLANS APPROVAL DATE

PB Americas, Inc.
303 Second St., Suite 700N
San Francisco, CA 94107-1317

SILVERMAN & LIGHT
1200 PARK AVENUE - SUITE 100
EMERYVILLE, CA 94608-3632

The State of California or its officers or agents shall not be responsible for the accuracy or completeness of electronic copies of this plan sheet.

Caltrans now has a web site! To get to the web site, go to http://www.dot.ca.gov

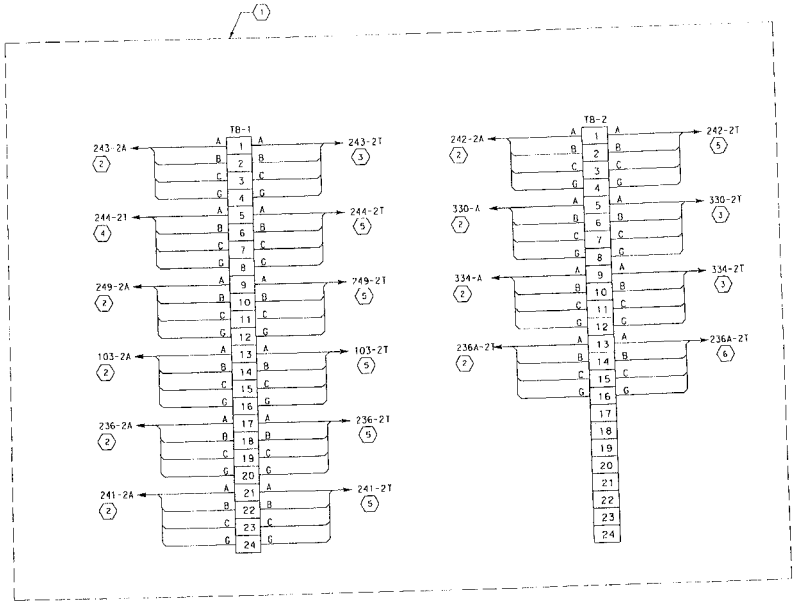

600 V TERMINAL BOX TB-23E

SHEET NOTES:

1. (N) TB-23E is located in (E) Vault #2A.
2. To (E) TB-20E located in (E) YBI MH-2..
3. To (E) DC terminal box near Pier E1.
4. To (E) LVCC-C in the (E) YBI Substation.
5. To temporary South-south detuor Lighting.
6. To (E) Viaduct LD lighting.

NOTES:

1. References:
   - For 600 V cable block diagram, see sheet E-9.
   - For cable schedules, see sheet E-8.

CONTRACT NO. 04-0120R4

CONTRACT CHANGE ORDER NO 134

SHEET 39 OF 94

DETAILS
TERMINAL BOX TB-23E CONNECTION DIAGRAM
TEMPORARY BYPASS STRUCTURE-WEST TIE IN

NO SCALE

E-21

STATE OF CALIFORNIA - DEPARTMENT OF TRANSPORTATION
Caltrans

DESIGN OVERSIGHT

CALCULATED/DESIGNED BY: BJ DATE
CHECKED BY: CL
REVISED BY
DATE REVISED

THIS PLAN ACCURATE FOR ELECTRICAL WORK ONLY

FOR REDUCED PLANS ORIGINAL SCALE IS IN MILLIMETERS 0 20 40 60 80

DGN FILE => T:\13103\SouthDetour\CCD WTI-2\Transit\Final Substitut 20080303\4120R3UA021.dgn
USERNAME => kuojo
CU 04251
EA 0120R3

DATE PLOTTED => 3/6/2008
TIME PLOTTED => 10:54:09 AM
00-00-00

DIST	COUNTY	ROUTE	KILOMETER POST TOTAL PROJECT	SHEET No	TOTAL SHEETS
04	SF	80		4[illegible]	45

Caltrans Metric

Carol Light 3/3/08
REGISTERED ELECTRICAL ENGINEER DATE

REGISTERED PROFESSIONAL ENGINEER CAROL LIGHT No. 10145 Exp. 09/30/08 ELECTRICAL STATE OF CALIFORNIA

PLANS APPROVAL DATE

PB Americas, Inc.
303 Second St., Suite 700N
San Francisco, CA 94107-1317

SILVERMAN & LIGHT
1201 PARK AVENUE - SUITE 100
EMERYVILLE, CA 94608-3632

The State of California or its officers or agents shall not be responsible for the accuracy or completeness of electronic copies of this plan sheet.

Caltrans now has a web site! To get to the web site, go to http://www.dot.ca.gov

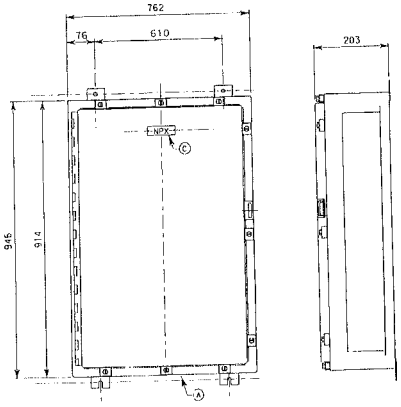

SCADA/COMMUNICATION TERMINAL BOX ENCLOSURE

Shown for Type 1 and Type 2
Type 3 dimensions shown in parenthesis

MATERIAL LIST	
ITEM	DESCRIPTION
A	Enclosure, Stainless Steel, NEMA type 4X, with interior panel See note 1.
B	Terminal blocks, rated 300 V, barrier type with stop screw terminals
C	Nameplate to be white lamicoid with black core, size 20 mm x 75 mm, lettering to be 3 mm condensed gothic.
D	Noise suppressor

CONTRACT NO. 04-0120R4

CONTRACT CHANGE ORDER NO 134

SHEET 40 OF 94

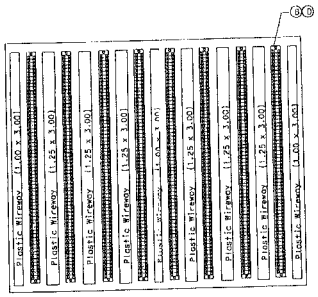

INSIDE PANEL LAYOUT
TB-21E

NAMEPLATE SCHEDULE				TYPE No.	WIRING DIAGRAM
ITEM	QTY	LINE No 1	LINE No 2		
NP1	1	SCADA/Communication	Term. Box TB-21E		E-19, E-20

NOTE: Nameplates shall be mounted to the control panel with 4-40 stainless steel machine screws. The control panel to be drilled and tapped. (no self-tapping screws)

DETAILS
SCADA/COMM TERMINAL BOX TB-21E
TEMPORARY BYPASS STRUCTURE-WEST TIE IN

NO SCALE

E-22

STATE OF CALIFORNIA - DEPARTMENT OF TRANSPORTATION
Caltrans

DESIGN OVERSIGHT

CALCULATED/ DESIGNED BY	BJ	DATE	REVISED BY
CHECKED BY	CL		DATE REVISED

THIS PLAN ACCURATE FOR ELECTRICAL WORK ONLY

FOR REDUCED PLANS ORIGINAL SCALE IS IN MILLIMETERS 0 20 40 60 80

DGN FILE => T:\13103\SouthDetour\CCO WTI-2\Transmit\Final Subtitle 20080303\4120R3UA022.dgn
USERNAME => kuaja

CU 04251 EA 0120R3

LAST REVISION 00-00-00 DATE PLOTTED => 3/6/2008 TIME PLOTTED => 10:54:40 AM

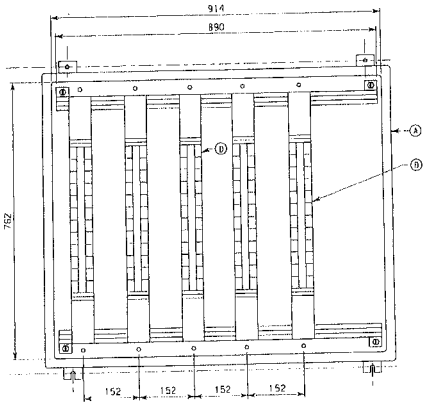

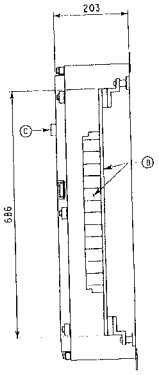

600 V ELECTRICAL TERMINAL BOX

MATERIAL LIST		DET.
ITEM	DESCRIPTION	QTY
Ⓐ	Enclosure, Stainless Steel, JIC Box Nema type 4X, 914 (W) x 762 (H) x 203 (D) Bracket assembly. See note 1.	1
Ⓑ	Terminal strips & Terminal blocks, rated 600 V, 20 A, barrier type with screw terminals.	(5) 24 pt
Ⓒ	Nameplate to be white lamicoid with black core, size 20 mm x 75 mm, lettering to be 3 mm condensed gothic.	as req'd
Ⓓ	600 V MCM terminal block tubular contact pressure cable connector for 4/0 AWG	1

NAMEPLATE SCHEDULE				WIRING DIAGRAM
ITEM	QTY	LINE No 1	LINE No 2	E-21
NP1	1	600 V Electrical	Term. Box TB-23E	

Clearance hole for 4-40 machine screw

NOTE: Nameplates shall be mounted to the control panel with 4-40 stainless steel machine screws. The control panel to be drilled and tapped. (no self-tapping screws)

DIST	COUNTY	ROUTE	4 DIGIT POST TOTAL PROJECT	SHEET NO	TOTAL SHEETS
04	SF	80		42	45

Carol Light 3/3/08
REGISTERED ELECTRICAL ENGINEER DATE

CAROL LIGHT No. 10145 Exp. 09/30/08 ELECTRICAL

PLANS APPROVAL DATE

PB Americas, Inc.
303 Second St., Suite 700N
San Francisco, CA 94107-1317

SILVERMAN & LIGHT
1201 PARK AVENUE - SUITE 100
EMERYVILLE, CA 94608-3632

The State of California or its officers or agents shall not be responsible for the accuracy or completeness of electronic copies of this plan sheet.

Caltrans now has a web site! To get to the web site, go to http://www.dot.ca.gov

CONTRACT NO. 04-0120R4

CONTRACT CHANGE ORDER NO 134

SHEET 41 OF 94

DETAILS
TEMPORARY BYPASS STRUCTURE
600 V TERMINAL BOX TB-23E
NO SCALE

E-23

STATE OF CALIFORNIA - DEPARTMENT OF TRANSPORTATION
Caltrans
DESIGN OVERSIGHT
CALCULATED/ DESIGNED BY BJ
CHECKED BY CL
DATE REVISED BY
DATE REVISED

THIS PLAN ACCURATE FOR ELECTRICAL WORK ONLY

FOR REDUCED PLANS ORIGINAL SCALE IS IN MILLIMETERS 0 20 40 60 80

DGN FILE => I:\k1303\SouthDetour\CCO WT1-2\Transmittal Final Submittal 20080303\4120R3UA023.dgn
USERNAME => kudjo

CU 04251 EA 0120R3

DATE PLOTTED => 3/6/2008
TIME PLOTTED => 10:15:52 AM

CONTRACT NO. 04-0120R4

CONTRACT CHANGE ORDER NO 134

SHEET 42 OF 94

DIST	COUNTY	ROUTE	TOTAL PROJECT	NO.	SHEETS
04	SF	80		43	45

Caltrans Metric

Carol Light 3/3/08
REGISTERED ELECTRICAL ENGINEER DATE

PLANS APPROVAL DATE

REGISTERED PROFESSIONAL ENGINEER CAROL LIGHT NO. 10145 Exp. 09/30/08 ELECTRICAL STATE OF CALIFORNIA

PB Americas, Inc.
303 Second St., Suite 700N
San Francisco, CA 94107-1317

SILVERMAN & LIGHT
1201 PARK AVENUE - SUITE 100
EMERYVILLE, CA 94608-3632

The State of California or its officers or agents shall not be responsible for the accuracy or completeness of electronic copies of this plan sheet.

Caltrans now has a web site! To get to the web site, go to http://www.dot.ca.gov

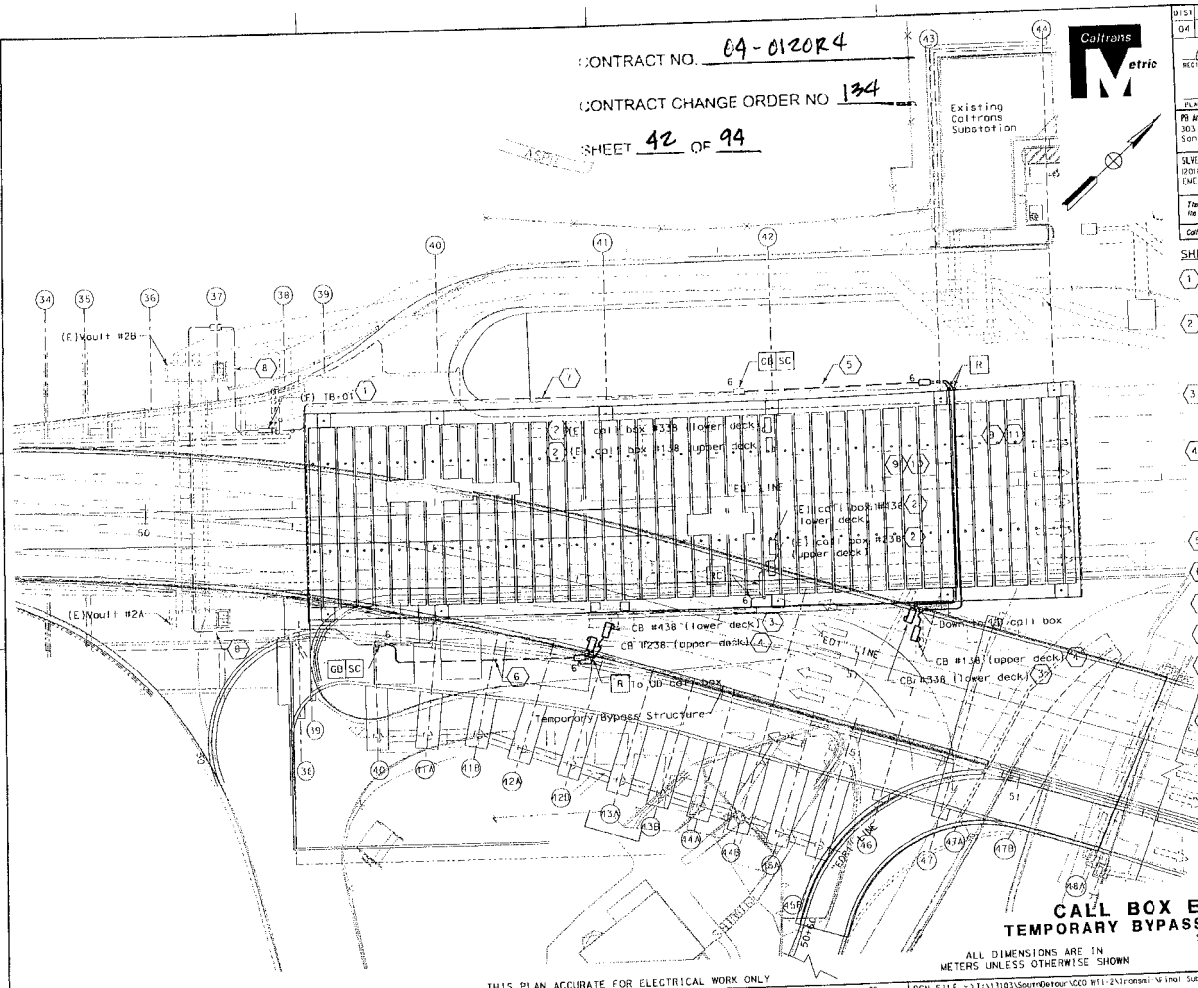

SHEET NOTES:

1. Existing Terminal Box TB-01 is located on the north retaining wall near Bent #38.
2. Remove existing call box and keeping 9-pin straight plug connection intact with one (1) meter length of cable pigtail gfor splicing at temporary location.
3. Temporary install relocated call box on LD temporary concrete barrier at this location. Secure call box on top of barrier.
4. Temporary install relocated call box on UD temporary concrete barrier at this location. Secure call box on top of barrier. Provide temporary flexible conduit with 3 #8, 1-6 #16 conductor cable and route down to lower deck and connect.
5. Install 53C, 3 #8, 2-6 #16 conductor cable for CB #138 and CB #338.
6. Install 53C, 3 #8, 2-6 #16 conductor cable for CB #238 and CB #438.
7. Existing 53c, 3 #8, 2-6 #16 conductor cable for CB #138 and CB #338.
8. Existing 53c, 3 #8, 2-6 #16 conductor cable for CB #238 and CB #438.
9. Route conduit below Upper Deck floor beam. Secure conduit with conduit clamps and channel strut. See detail on F-18.
10. Install 41C, 3 #8, 1-6 #16 conductor cable for CB #138.
11. Install 41C, 3 #8, 1-6 #16 conductor cable for CB #338.

CALL BOX ELECTRICAL WORK
TEMPORARY BYPASS STRUCTURE-WEST TIE IN

SCALE: 1:250

E-24

ALL DIMENSIONS ARE IN METERS UNLESS OTHERWISE SHOWN

THIS PLAN ACCURATE FOR ELECTRICAL WORK ONLY

FOR REDUCED PLANS ORIGINAL SCALE IS IN MILLIMETERS 0 20 40 60 80

DGN FILE => T:\13103\SouthDetour\CCO WTI-2\Transmi\Final Submittal 20080303\4120R3UA024.dgn
USERNAME => kuojo

CU 04251

EA 0120R3

STATE OF CALIFORNIA - DEPARTMENT OF TRANSPORTATION

Caltrans

DESIGN OVERSIGHT

CALCULATED/DESIGNED BY EJ DATE REVISED BY

CHECKED BY CL DATE REVISED

LAST REVISION 00-00-00

DATE PLOTTED => 3/6/2008
TIME PLOTTED => 11:07:09 AM

DIST	COUNTY	ROUTE	KILOMETER POST TOTAL PROJECT	SHEET No.	TOTAL SHEETS
04	SF	80		44	45

Caltrans Metric

Carol Light 3/3/08
REGISTERED ELECTRICAL ENGINEER DATE

REGISTERED PROFESSIONAL ENGINEER CAROL LIGHT No. 10145 Exp. 08/30/08 ELECTRICAL STATE OF CALIFORNIA

PLANS APPROVAL DATE

PG Americas, Inc.
303 Second St., Suite 700N
San Francisco, CA 94107-1317

SILVERMAN & LIGHT
1201 PARK AVENUE SUITE 100
EMERYVILLE, CA 94608-3632

The State of California or its officers or agents shall not be responsible for the accuracy or completeness of electronic copies of this plan sheet.

Caltrans now has a web site! To get to the web site, go to http://www.dot.ca.gov

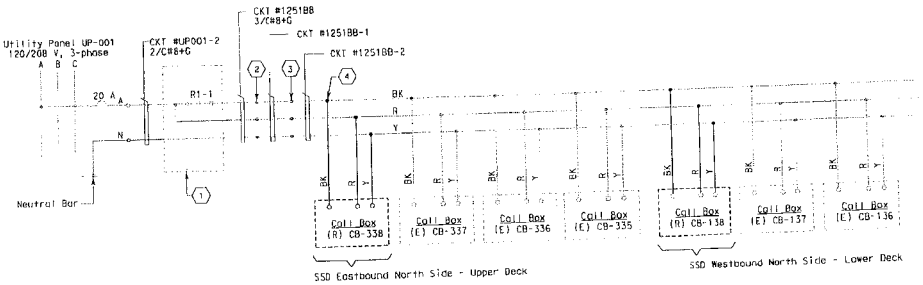

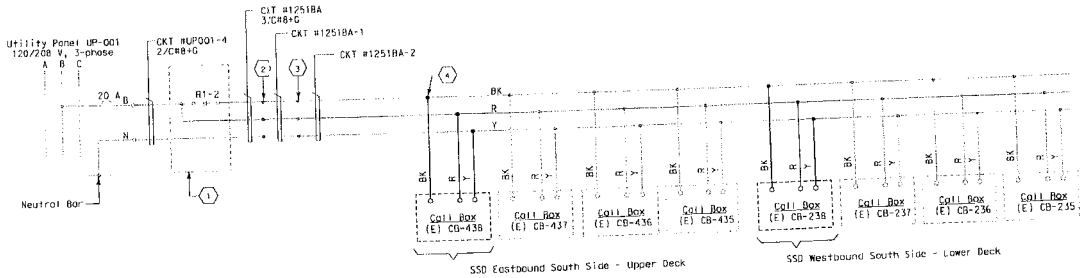

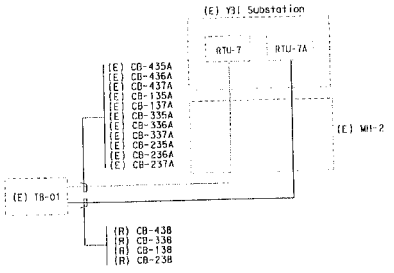

Block Diagram

SHEET NOTES:

1. West Span call box relay cabinet is located in the (N) YBI substation. For call box lighting control, see elementary diagram sheet E-38E, of contract #04-0120G4.
2. For RTU #7A connection diagram, see sheet E-242, of contract #04-0120G4.
3. For TB-01 connection diagram, see sheet E-38C, of contract #04-0120G4.
4. Intercept (E) wiring and terminate to call box terminal cabinet.
5. (E) TB-01 is located on the north retaining wall ner Bent #38.

NOTES:

1. To ensure continuous operation, contractor shall check and verify that all existing connections to call boxes are functional.
2. References:
   - For location of existing call boxes, see sheet E-50 of contract #04-0120G4.
   - For UP-001 panel schedule, see sheet E-102, of contract #04-0120G4

CONTRACT NO. 04-0120R4

CONTRACT CHANGE ORDER NO 134

SHEET 43 OF 94

DETAILS
CALL BOX WIRING/BLOCK DIAGRAM
TEMPORARY BYPASS STRUCTURE-WEST TIE IN

NO SCALE

E-25

STATE OF CALIFORNIA - DEPARTMENT OF TRANSPORTATION

Caltrans

DESIGN OVERSIGHT

CALCULATED/DESIGNED BY BJ DATE REVISED BY

CHECKED BY CL DATE REVISED

THIS PLAN ACCURATE FOR ELECTRICAL WORK ONLY

FOR REDUCED PLANS ORIGINAL SCALE IS IN MILLIMETERS 0 20 40 60 80

DGN FILE => T:\13103\SouthDetour\CCD WTI-2\Transit\Final Submittal 20080303\4120R3UA025.dgn
USERNAME => kuaja

CU 04251

EA 0120R3

DATE PLOTTED => 3/6/2008
TIME PLOTTED => 11:07:26 AM

00-00-00

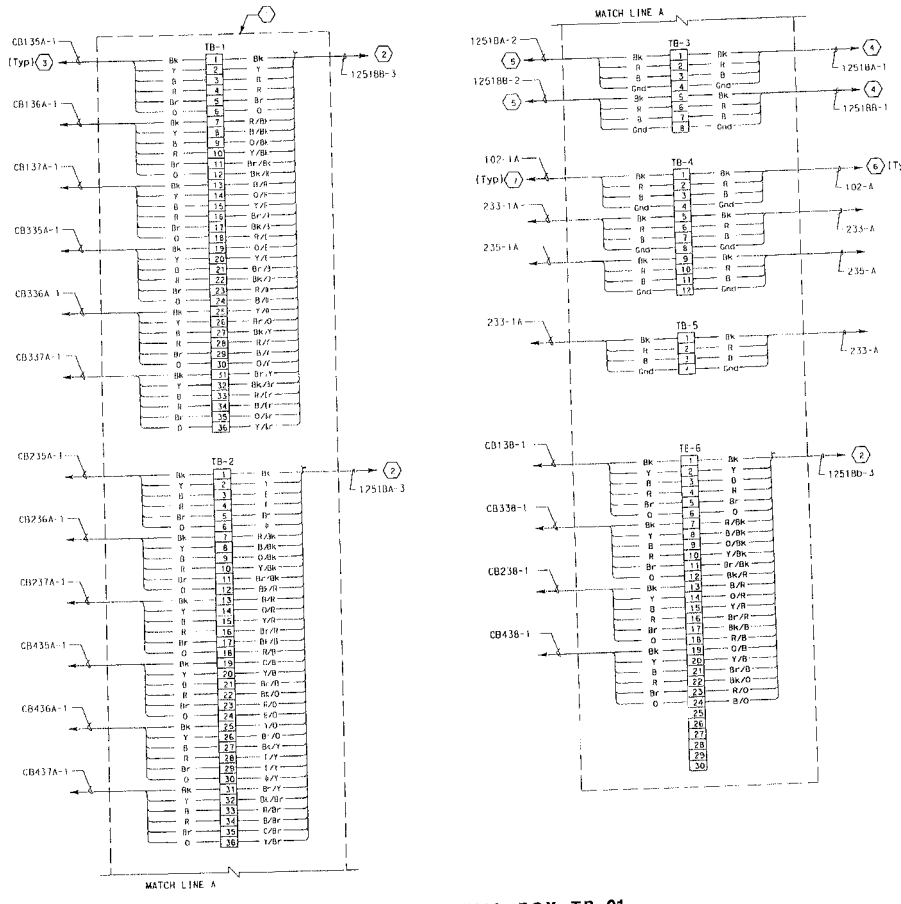

600 V TERMINAL BOX TB-01

DIST	COUNTY	ROUTE	KILOMETER POST TOTAL PROJECT	SHEET No	TOTAL SHEETS
04	SF	80		45	45

Carol Light 3/3/08
REGISTERED ELECTRICAL ENGINEER DATE

REGISTERED PROFESSIONAL ENGINEER CAROL LIGHT No. 10145 Exp. 09/30/08 ELECTRICAL STATE OF CALIFORNIA

PLANS APPROVAL DATE

PB Americas, Inc.
303 Second St., Suite 700N
San Francisco, CA 94107-1317

SILVERMAN & LIGHT
1201 PARK AVENUE - SUITE 100
EMERYVILLE, CA 94608-3632

The State of California or its officers or agents shall not be responsible for the accuracy or completeness of electronic copies of this plan sheet.

Caltrans now has a web site! To get to the web site, go to http://www.dot.ca.gov

SHEET NOTES:

1. (E) TB-01 is located on the north retaining wall near Bent #3B.
2. To (E) RTU-7 in the (E) YBI Substation via (E) duct bank and (E) MH-3.
3. To existing junction box for (E) Call box.
4. To contactor in (E) RTU-7A in the (E) YBI Substation.
5. To junction box for (E) Call box CB-437 for 1251BA-2 and to junction box for (E) Call box CB-337 for 1251BB-2.
6. To (E) LVCC-C in the (E) YBI Substation.

CONTRACT NO. 04-0120R4

CONTRACT CHANGE ORDER NO 134

SHEET 44 OF 94

DETAILS
TERMINAL BOX TB-01 CONNECTION DIAGRAM
TEMPORARY BYPASS STRUCTURE-WEST TIE IN

E-26

STATE OF CALIFORNIA - DEPARTMENT OF TRANSPORTATION
Caltrans

DESIGN OVERSIGHT
CALCULATED/DESIGNED BY | BJ | DATE | REVISED BY
CHECKED BY | CL | DATE REVISED

THIS PLAN ACCURATE FOR ELECTRICAL WORK ONLY

FOR REDUCED PLANS ORIGINAL SCALE IS IN MILLIMETERS 0 20 40 60 80

DGN FILE => T:\13103\SouthDetour\CCO #11-2\Transmit\Final Submittal 20080303\4120R3DA026.dgn
USERNAME => kuojo
CU 04251
EA 0120R3

DATE PLOTTED => 3/6/2008
TIME PLOTTED => 11:07:49 AM
00-00-00

SHEET INDEX

SHEET NO.	TITLE
E-1	ELECTRICAL NOTES AND SHEET INDEX TEMPORARY BYPASS STRUCTURE - VIADUCT
E-2	ELECTRICAL SYMBOLS AND ABBREVIATIONS TEMPORARY BYPASS STRUCTURE - VIADUCT
E-3	SIGN ILLUMINATION TEMPORARY BYPASS STRUCTURE - VIADUCT
E-4	SIGN ILLUMINATION TEMPORARY BYPASS STRUCTURE - VIADUCT
E-4A	SIGN ILLUMINATION - DETAILS TEMPORARY BYPASS STRUCTURE - VIADUCT
E-5	SIGNAL AND LIGHTING - CABLE REROUTE TEMPORARY BYPASS STRUCTURE - VIADUCT
E-6	SIGNAL AND LIGHTING - CABLE REROUTE TEMPORARY BYPASS STRUCTURE - VIADUCT
E-7	SIGNAL AND LIGHTING - CABLE REROUTE TEMPORARY BYPASS STRUCTURE - VIADUCT
E-8	SIGNAL AND LIGHTING - CABLE SCHEDULES TEMPORARY BYPASS STRUCTURE - VIADUCT
E-9	NOT USED
E-10	NOT USED
E-11	NOT USED
E-12	NOT USED
E-13	NOT USED
E-14	NOT USED
E-15	NOT USED
E-16	NOT USED
E-17	NOT USED
E-17A	SIGNAL AND LIGHTING - DETAILS TEMPORARY BYPASS STRUCTURE - VIADUCT
E-18	LIGHTING - WESTBOUND TEMPORARY BYPASS STRUCTURE - VIADUCT
E-19	LIGHTING - WESTBOUND TEMPORARY BYPASS STRUCTURE - VIADUCT
E-20	LIGHTING - WESTBOUND TEMPORARY BYPASS STRUCTURE - VIADUCT
E-21	LIGHTING - EASTBOUND TEMPORARY BYPASS STRUCTURE - VIADUCT
E-22	LIGHTING - EASTBOUND TEMPORARY BYPASS STRUCTURE - VIADUCT
E-23	LIGHTING - EASTBOUND TEMPORARY BYPASS STRUCTURE - VIADUCT
E-24	LIGHTING - DIAGRAMS WESTBOUND TEMPORARY BYPASS STRUCTURE - VIADUCT
E-24A	LIGHTING - DIAGRAMS EASTBOUND TEMPORARY BYPASS STRUCTURE - VIADUCT
E-25	LIGHTING - DETAILS TEMPORARY BYPASS STRUCTURE - VIADUCT
E-26	LIGHTING - DETAILS TEMPORARY BYPASS STRUCTURE - VIADUCT
E-27	LIGHTING - DETAILS TEMPORARY BYPASS STRUCTURE - VIADUCT
E-28	SIGNAL AND LIGHTING - CALL BOX LOCATIONS - WESTBOUND TEMPORARY BYPASS STRUCTURE - VIADUCT
E-29	SIGNAL AND LIGHTING - CALL BOX LOCATIONS - EASTBOUND TEMPORARY BYPASS STRUCTURE - VIADUCT

STANDARD PLANS DATED JULY, 1999 WITH ERRATUM NO. 99-1

ES-6A LIGHTING STANDARDS TYPES 15, 21 AND 22

ES-10 SIGNAL, LIGHTING AND ELECTRICAL SYSTEMS ISOLUX DIAGRAMS

STANDARD PLAN SHEET NO.

DETAIL NO.

GENERAL NOTES

1. All electrical work shall conform to (1999 and 2004) the latest issue of State of California Department of Transportation Standard Specifications and Standard Plans. These general notes and the special provisions under this contract also apply. For any conflict of provisions, State Guidelines apply.
2. Conduit routing is shown diagrammatically. Pull box locations are located and shown on plans. Provide additional pull boxes as required. Exact location of equipment and devices may be adjusted by field conditions or as directed by the Engineer.
3. Minimum conduit size to be 21 mm. Conduits located at exterior locations or exposed to moisture to be rigid galvanized steel, PVC coated. Conduits routed at interior locations to be rigid galvanized steel.
4. Conduit fittings for 78 mm and larger are to have a 610 mm minimum bending radius.
5. Equipment and devices to be provided with nameplate tags as shown on the plans.
6. Feeders and branch circuits to be provided with an equipment ground wire.
7. 15 KV splice boxes to be installed as shown and permanently marked "DANGER-HIGH VOLTAGE-KEEP OUT". The letters are to be block type and at least 50 mm in height.
8. Label conductors and cables per cable schedules.
9. Contractor to reuse existing call boxes currently on existing bridge. Contractor to relocate\rewire to TBS Bridge Structure. The state will provide a spare call box to test TBS locations prior to call box relocations.
10. Contractor to verify all controlling field dimensions before ordering or fabricating any material.
11. Provide and install new armored cables or conduit as shown, scheduled and as needed in construction. Support cables or conduit from surfaces using 41x41 channel, hot dipped galvanized and appropriate strut mounted clamps. See Detail. Support armored cables or conduit horizontally along Temporary Bypass Structure (TBS) using steel ladder cable trays, hot dipped galvanized steel after fabrication (Cooper B-Line Series 148G12-24-144 or equal). See Details for cable tray sizing, support, etc.
12. See Electrical Special Provisions for other related work not shown on the plans.
13. New armored cable will be completely routed and tested before cutting existing circuits and/or interconnecting new.
14. Contractor to verify existing installations and function prior to intercepting or splicing to ensure continuity of electrical and other services.
15. The Contractor shall provide all conduits with permanent field markers and labels.
16. The Contractor shall verify existing installation prior to intercepting and splicing with the new armored cable to ensure continuity of electrical service to West span.
17. The Contractor shall provide and install new armored cables on metal racks, troughs, in cable trays or secured to supports spaced not greater than 1.5 meters apart.
18. The Contractor shall provide splice boxes for armored cables.
19. New armored cable will be completely routed and tested before cutting existing circuits and/or interconnecting new.
20. Contractor to provide expansion fittings or loops at bridge expansion joints or points of deflection. Provide stainless steel support grips to hold the weight of electrical cable as it loops or hang in vertical, sloping or horizontal position.
21. 15kV splicing shall be done by a certified High Voltage Splicer. The Contractor shall allow 5 working days to approve splicer by Engineer.
22. If there are cables or conduit not shown on the plans, the Contractor shall verify the use of these equipment. If this equipment has to be maintained, the Contractor shall relocate the equipment and maintain as directed by Engineer.
23. All conduits and cables shall be connected to junction boxes using threaded insulated bonding bushing (pressure Type lug) with gasketed sealing locknut and moisture proof hub with "O" ring.
24. Exact location of equipment maybe adjusted to field conditions by the Engineer.

DIST	COUNTY	ROUTE	KILOMETER POST TOTAL PROJECT	SHEET NO.	TOTAL SHEETS
04	SF	80	12.6/13.2		

REGISTERED ELECTRICAL ENGINEER

PROFESSIONAL ENGINEER — MARK W. BURTON — No. E 6913340 — EXP 06/30/09 — ELECTRICAL — STATE OF CALIFORNIA

PLANS APPROVAL DATE

The State of California or its officers or agents shall not be responsible for the accuracy or completeness of electronic copies of this plan sheet.

TRC

CONTRACT NO. 04-0120R4

CONTRACT CHANGE ORDER NO 134

SHEET 45 OF 94

VIADUCT ELECTRICAL
Print date 10/3/2008 time 9:54:31 AM

STATE OF CALIFORNIA - DEPARTMENT OF TRANSPORTATION — Caltrans

PROJECT ENGINEER — MARK W. BURTON

CALCULATED/ DESIGNED BY — M.W.B. — 04/08

CHECKED BY — R.M.S. — 04/08

DATE REVISED — REVISED BY

THIS PLAN ACCURATE FOR ELECTRICAL WORK ONLY.

10/3/2008 9:54:31 AM M:\Boy Scouts\Electrical Plans\04120ru0001.dgn

ELECTRICAL NOTES AND SHEET INDEX
TEMPORARY BYPASS STRUCTURE - VIADUCT

NO SCALE

ALL DIMENSIONS ARE IN MILLIMETERS UNLESS OTHERWISE SHOWN

E-1

LOCP 07/01/2007

ABBREVIATIONS

Approx	Approximately
CB	Call Box
CKT, ckt	Circuit
COM	Communication
conc	Concrete
Cont'd	Continued
Dia	Diameter
(E)	Existing
EB	Eastbound
EDI	Bay Bridge Alignment (Eas-bound)
EDRI	Onramp (Eastbound)
EM	Existing Bay Bridge Alignment (Eastbound)
FSC	Fiber Splice Closure
FTC	Fiber Optic Trunkline Cable
G, GND, Gnd	Ground (ground cable)
GRS	Galvanized Rigid Steel
JB	Junction Box
Kcmil	kilo Circular Mil
kV	kilovolt
LVCC	Low Voltage Control Center
m	Meter
mm	Millimeter
Max	Maximum
MFR	Manufacturer
MH	Mounting Height
Min	Minimum
No.	Number
PR	Pair
PWR	Power
SFOBB	San Francisco Oakland Bay Bridge
SHLD, Shld	Shield
Term	Terminal
TOS	Traffic Operating System
USCG	United States Coast Guard
V	Volt
W	Wire
WB	Westbound
WDI	Bay Bridge Alignment (Westbound)
WM	Existing Bay Bridge Alignment (Westbound)
YBI	Yerba Buena Island

SYMBOLS

- (1) — Sheet Notes, applicable only to the Drawing 1=Sequential number
- (J) — Junction Box, Conduit Fitting, Bent Numbers
- CB (4) — Call Box, State Furnished
- Conduit turned up
- Conduit turned down
- Cable\Conduit - Existing
- Cable\Conduit - New
- Conduit run concealed in wall, concrete barrier, slab or routed underground duct bank
- CCTV system camera
- Existing fluorescent fixture
- Soffit Fixture
- Existing Pole Mounted Luminaires
- Pole Mounted Luminaires
- Pull Box
- Splice Box

LIGHTING POLE IDENTIFICATION

243 - 1
- 243 — Roadway Ltg Pole
- 1 — Assigned sequential lighting pole number
- Assigned circuit number

PERMANENT AND TEMPORARY WEST AND EAST SPAN CABLES

243 - 1A
- 243 — Circuit number
- 1A — Permanent cable location: 1- Westbound, 2- Eastbound, T- Temporary

DIST	COUNTY	ROUTE	KILOMETER POST TOTAL PROJECT	SHEET No	TOTAL SHEETS
04	SF	80	12.6/13.2		

REGISTERED ELECTRICAL ENGINEER

PLANS APPROVAL DATE

The State of California or its officers or agents shall not be responsible for the accuracy or completeness of electronic copies of this plan sheet

REGISTERED PROFESSIONAL ENGINEER — E015340 — Exp 09/30/09 — ELECTRICAL — STATE OF CALIFORNIA

Caltrans Metric

TRC

CONTRACT NO. 04-0120R4

CONTRACT CHANGE ORDER NO 134

SHEET 46 OF 94

VIADUCT ELECTRICAL
Print date: 10/3/2008 Time: 9:47:20 AM

STATE OF CALIFORNIA - DEPARTMENT OF TRANSPORTATION
Caltrans

PROJECT ENGINEER: MARK W. BURTON

CALCULATED/DESIGNED BY: M.K.S. DATE: 04/05
CHECKED BY: R.K.S. DATE: 04/05
REVISED BY: DATE REVISED

THIS PLAN ACCURATE FOR ELECTRICAL WORK ONLY.

10/3/2008 9:47:20 AM H:\Bay Bridge\Electrical Plans\40120r1a002.dgn

ELECTRICAL SYMBOLS AND ABBREVIATIONS
TEMPORARY BYPASS STRUCTURE - VIADUCT

NO SCALE

ALL DIMENSIONS ARE IN MILLIMETERS UNLESS OTHERWISE SHOWN

E-2

DATE 08/15/08

STATE OF CALIFORNIA - DEPARTMENT OF TRANSPORTATION
Caltrans

PROJECT ENGINEER
MARK W. BURTON

CALCULATED/DESIGNED BY
CHECKED BY

DATE REVISED BY
M.W.B. 04/05
R.W.S. 04/05

DATE REVISED

DIST	COUNTY	ROUTE	KILOMETER POST TOTAL PROJECT	SHEET NO	TOTAL SHEETS
04	SF	80	12.6/13.2		

REGISTERED ELECTRICAL ENGINEER

PLANS APPROVAL DATE

The State of California or its officers or agents shall not be responsible for the accuracy or completeness of electronic copies of this plan sheet.

PROFESSIONAL ENGINEER — MARK W. BURTON — E015340 EXP 06/30/09 — ELECTRICAL — STATE OF CALIFORNIA

TRC

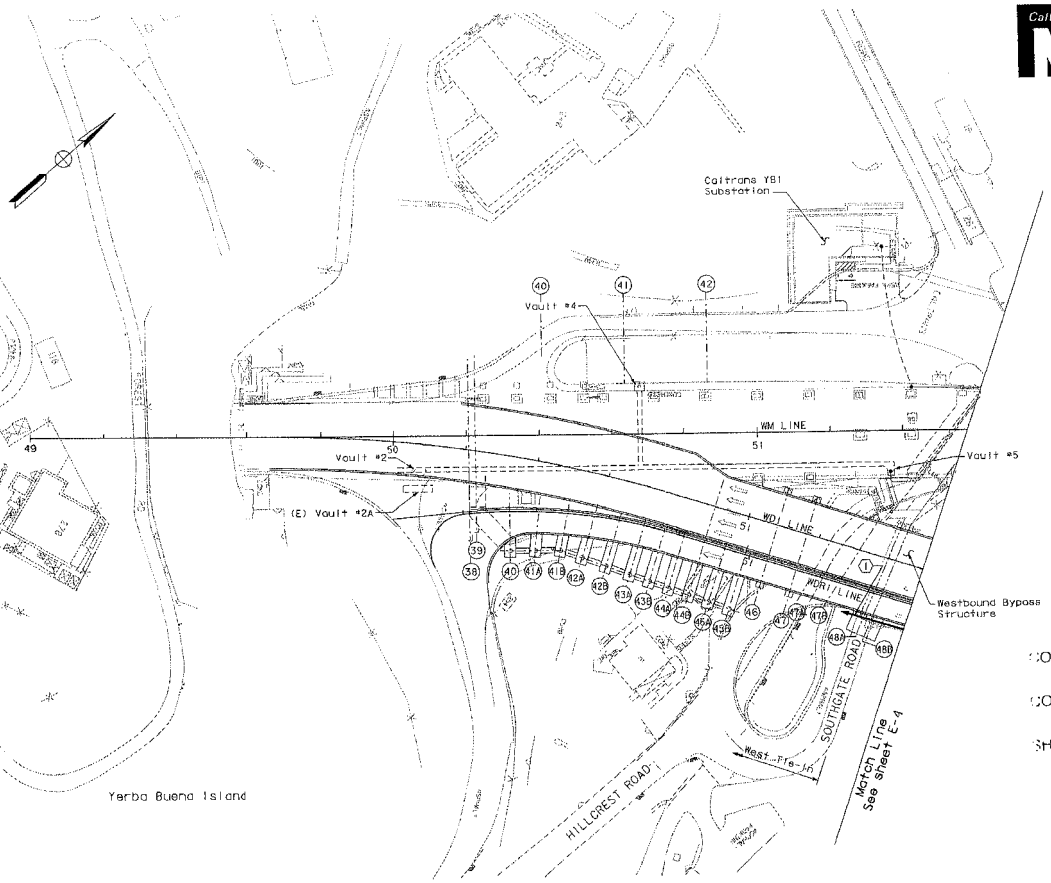

SHEET NOTES:

(1) CKT #249, see West Tie-in drawings for continuation.

CONTRACT NO. 04-0120R4

CONTRACT CHANGE ORDER NO 134

SHEET 47 OF 94

VIADUCT ELECTRICAL
Print dates 10/3/2008 Time: 9:54:59 AM

CABLE PLAN - WESTBOUND

SIGN ILLUMINATION
TEMPORARY BYPASS STRUCTURE - VIADUCT

ALL DIMENSIONS ARE IN METERS UNLESS OTHERWISE SHOWN

SCALE 1:500

E-3

THIS PLAN ACCURATE FOR ELECTRICAL WORK ONLY.

10/3/2008 9:54:59 AM K:\Bay Bridge\Electrical Plans\401208ue0003.dgn

DIST	COUNTY	ROUTE	KILOMETER POST TOTAL PROJECT	SHEET NO	TOTAL SHEETS
04	SF	80	12.6/13.2		

REGISTERED ELECTRICAL ENGINEER

E015340
EXP 06/30/09

PLANS APPROVAL DATE

The State of California or its officers or agents shall not be responsible for the accuracy or completeness of electronic copies of this plan sheet.

TRC

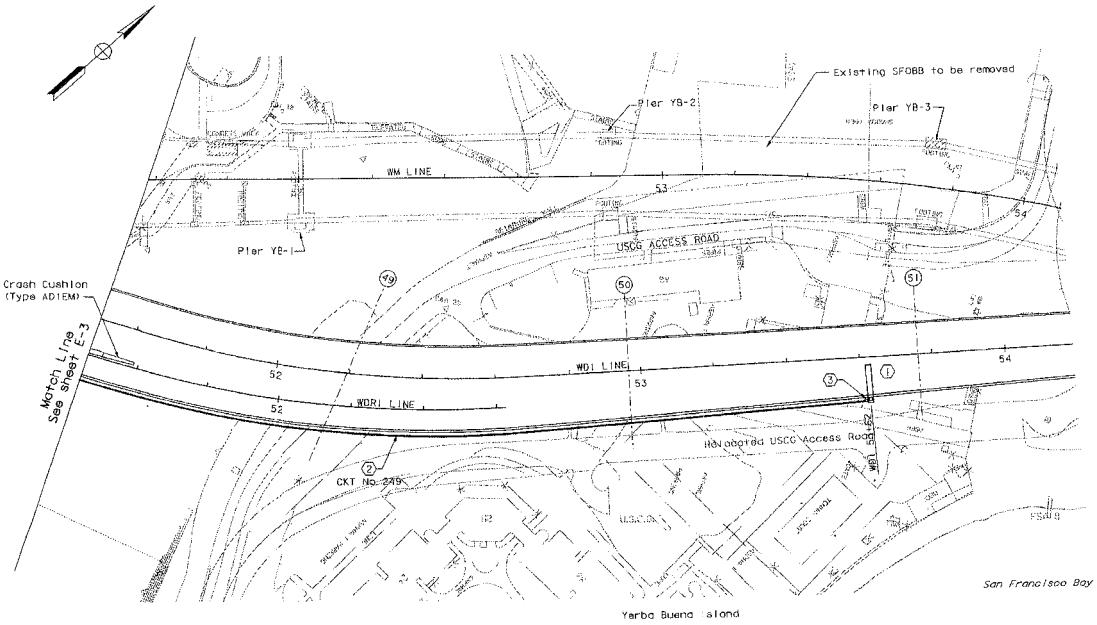

SHEET NOTES:

1. New YB1 exit sign on westbound roadway. See Viaduct Structural Plans for sign details. See Sheet E-4A for electrical details.
2. For YB1 sign lighting, use new armored cable in cable tray outside of concrete barrier of westbound bypass. See sheet E-4A for cable tray details.
3. Pull box (480V) to connect to YB1 sign lighting.

CONTRACT NO. 04-0120R4

CONTRACT CHANGE ORDER NO 134

SHEET 48 OF 94

VIADUCT ELECTRICAL
Print date: 10/3/2008 Time: 8:55:21 AM

CABLE PLAN - WESTBOUND

SIGN ILLUMINATION
TEMPORARY BYPASS STRUCTURE - VIADUCT
SCALE 1:500
ALL DIMENSIONS ARE IN METERS UNLESS OTHERWISE SHOWN

E-4

THIS PLAN ACCURATE FOR ELECTRICAL WORK ONLY.

STATE OF CALIFORNIA - DEPARTMENT OF TRANSPORTATION
Caltrans

PROJECT ENGINEER: MARK W. BURTON

CALCULATED/ DESIGNED BY	DATE	REVISED BY	DATE REVISED
M.W.B.	04/08		
CHECKED BY	DATE		
R.W.S.	04/08		

10/3/2008 8:55:21 AM M:\Bay Bridge\Electrical Plans\40120Pub004.dgn

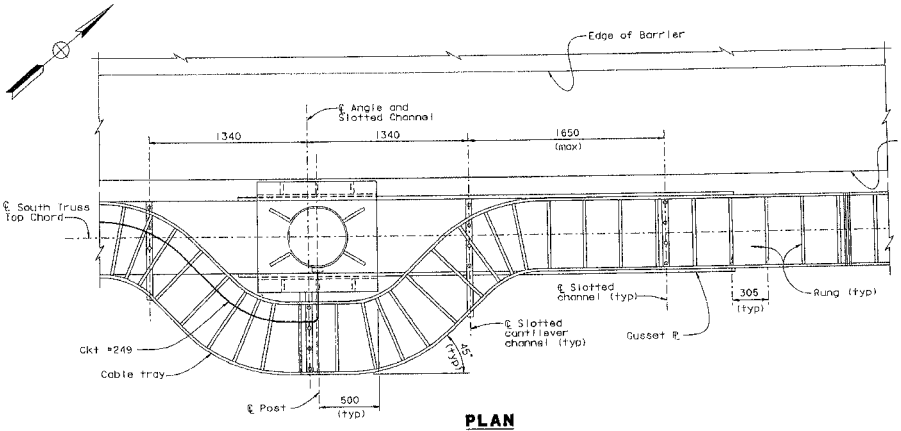

PLAN
1:15

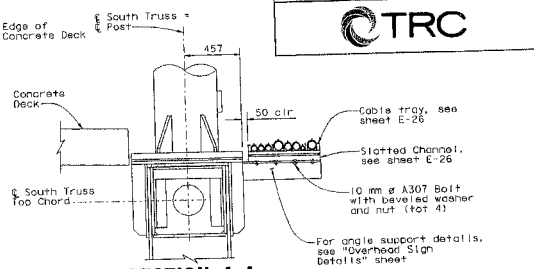

SECTION A-A
1:15

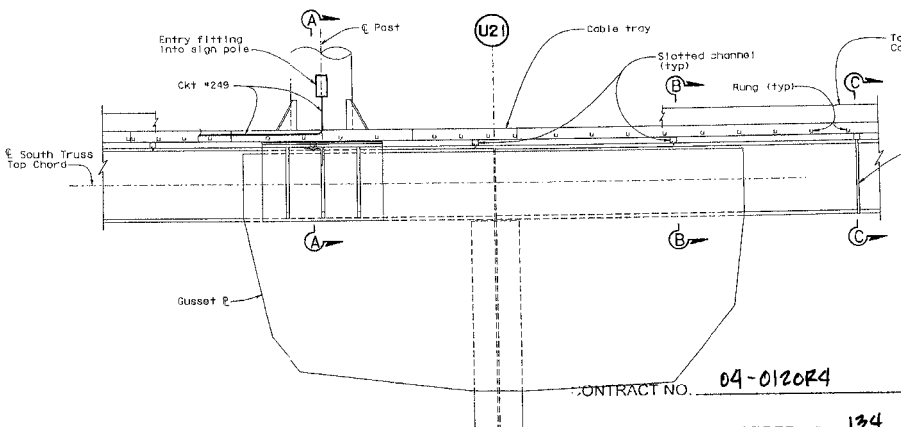

ELEVATION
1:15

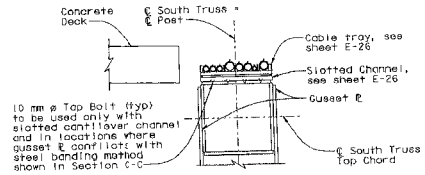

SECTION B-B
1:15

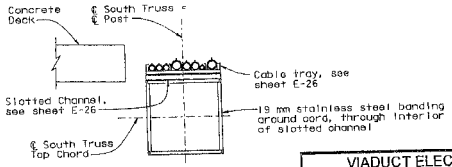

SECTION C-C
1:15

DIST	COUNTY	ROUTE	KILOMETER POST / TOTAL PROJECT	SHEET NO	TOTAL SHEETS
04	SF	80	12.6/13.2		

REGISTERED ELECTRICAL ENGINEER

PLANS APPROVAL DATE

The State of California or its officers or agents shall not be responsible for the accuracy or completeness of electronic copies of this plan sheet.

E015340 EXP 06/30/09

REGISTERED PROFESSIONAL ENGINEER MARK W. BURTON ELECTRICAL STATE OF CALIFORNIA

Caltrans Metric

TRC

VIADUCT ELECTRICAL
Print date: 10/3/2008 Time: 9:55:41 AM

STATE OF CALIFORNIA - DEPARTMENT OF TRANSPORTATION
Caltrans

PROJECT ENGINEER MARK W. BURTON

CALCULATED/DESIGNED BY M.W.B. (xx/05) | CHECKED BY R.M.S. (xx/05) | DATE REVISED BY | DATE REVISED

CONTRACT NO. 04-0120R4

CONTRACT CHANGE ORDER NO 134

SHEET 49 OF 94

SIGN ILLUMINATION DETAILS
TEMPORARY BYPASS STRUCTURE - VIADUCT

SCALE AS NOTED

ALL DIMENSIONS ARE IN MILLIMETERS UNLESS OTHERWISE SHOWN

E-4A

THIS PLAN ACCURATE FOR ELECTRICAL WORK ONLY.

10/3/2008 9:55:41 AM M:\Msdgn\Electrical Plans\4012R4sh0E4A.dgn

LAST REVISION

DIST	COUNTY	ROUTE	KILOMETER POST TOTAL PROJECT	SHEET NO	TOTAL SHEETS
04	SF	80	12.6/13.2		

REGISTERED ELECTRICAL ENGINEER

PLANS APPROVAL DATE

The State of California or its officers or agents shall not be responsible for the accuracy or completeness of electronic copies of this plan sheet.

REGISTERED PROFESSIONAL ENGINEER MARK W. BURTON E015340 EXP 06/30/09 ELECTRICAL STATE OF CALIFORNIA

TRC

Caltrans Metric

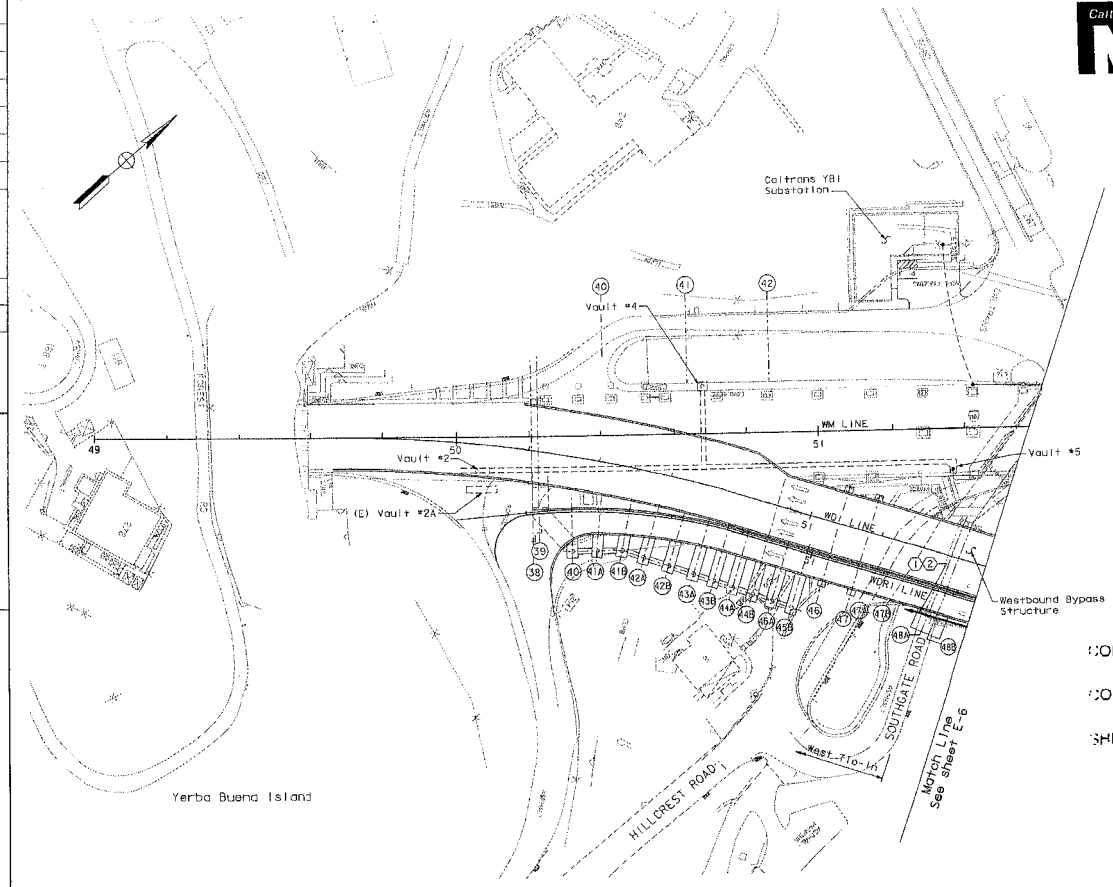

SHEET NOTES:

1. See West Tie-In drawings for continuation.
2. See Cable Schedule for cables at this location.

CONTRACT NO. 04-0120R4

CONTRACT CHANGE ORDER NO 134

SHEET 50 OF 94

VIADUCT ELECTRICAL
Print date: 10/3/2008 Time: 9:56:03 AM

PLAN - WESTBOUND

SIGNAL AND LIGHTING CABLE REROUTE
TEMPORARY BYPASS STRUCTURE - VIADUCT

ALL DIMENSIONS ARE IN METERS UNLESS OTHERWISE SHOWN

SCALE 1:500

E-5

THIS PLAN ACCURATE FOR ELECTRICAL WORK ONLY.

STATE OF CALIFORNIA - DEPARTMENT OF TRANSPORTATION

Caltrans

PROJECT ENGINEER: MARK W. BURTON

CALCULATED/DESIGNED BY: M.W.B. DATE: 04/05 REVISED BY

CHECKED BY: R.M.S. DATE: 04/05 DATE REVISED

10/3/2008 9:56:03 AM N:\Bay Bridge\Electrical Plans\4012Ordab05.dgn

DIST	COUNTY	ROUTE	KILOMETER POST TOTAL PROJECT	SHEET NO	TOTAL SHEETS
04	SF	80	12.6/13.2		

REGISTERED ELECTRICAL ENGINEER

PLANS APPROVAL DATE

The State of California or its officers or agents shall not be responsible for the accuracy or completeness of electronic copies of this plan sheet.

REGISTERED PROFESSIONAL ENGINEER M.K.W. BURTON E015340 EXP 06/30/09 ELECTRICAL STATE OF CALIFORNIA

TRC

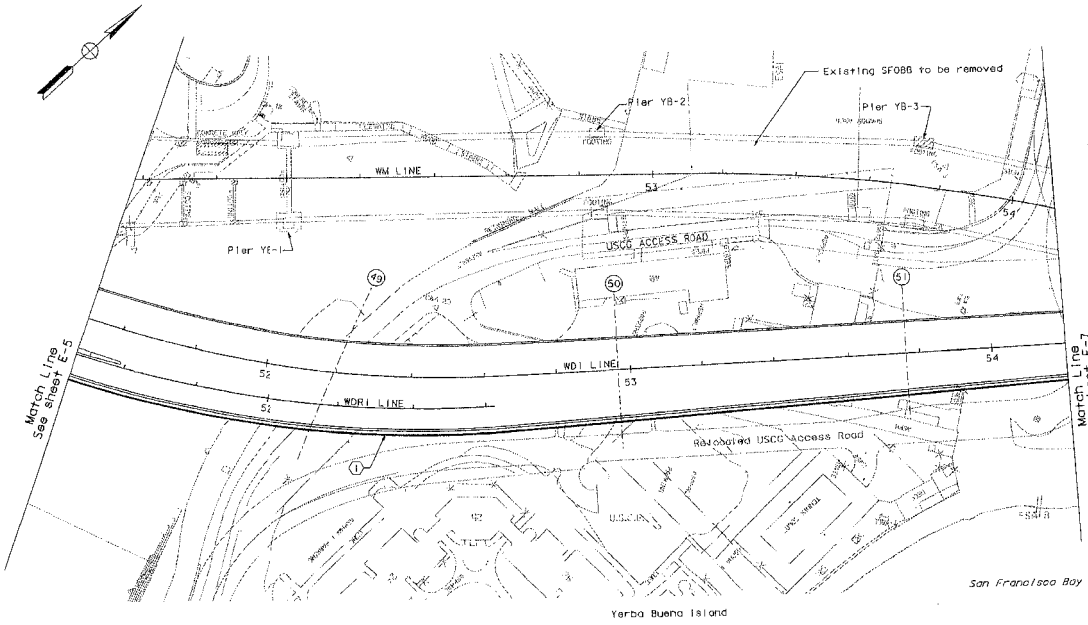

SHEET NOTE:

(1) Refer to Tables A and B on sheet E-8 for new armored cable schedule. See sheet E-4A and E-26 for cable tray details.

CONTRACT NO. 04-0120R4

CONTRACT CHANGE ORDER NO 134

SHEET 51 OF 94

VIADUCT ELECTRICAL
Print date: 10/3/2008 Time: 9:56:32 AM

PLAN - WESTBOUND

SIGNAL AND LIGHTING CABLE REROUTE
TEMPORARY BYPASS STRUCTURE - VIADUCT

SCALE 1:500

ALL DIMENSIONS ARE IN METERS UNLESS OTHERWISE SHOWN

E-6

THIS PLAN ACCURATE FOR ELECTRICAL WORK ONLY.

STATE OF CALIFORNIA - DEPARTMENT OF TRANSPORTATION

Caltrans

PROJECT ENGINEER: MARK W. BURTON

CALCULATED/DESIGNED BY: M.W.B. DATE: 04/05 REVISED BY

CHECKED BY: R.M.S. DATE: 04/05 DATE REVISED

10/3/2008 9:56:32 AM H:\Bay Bridge\Electrical Plans\4012Crus006.dgn

DIST	COUNTY	ROUTE	KILOMETER POST TOTAL PROJECT	SHEET No	TOTAL SHEETS
04	SF	80	12.6/13.2		

REGISTERED ELECTRICAL ENGINEER

PLANS APPROVAL DATE

The State of California or its officers or agents shall not be responsible for the accuracy or completeness of electronic copies of this plan sheet.

REGISTERED PROFESSIONAL ENGINEER — MARK W. BURTON — E015340 — EXP 06/30/09 — ELECTRICAL — STATE OF CALIFORNIA

Caltrans Metric

TRC

CABLE PLAN - EASTBOUND

SHEET NOTES:

1. See Cable Schedule. Route CKT #G30 together with new cables routed from Vault #2A.
2. See East Tie-In drawings for continuation.

CONTRACT NO. 04-0120R4

CONTRACT CHANGE ORDER NO 134

SHEET 52 OF 94

VIADUCT ELECTRICAL
Print date: 10/3/2008 Time: 9:56:48 AM

PROJECT ENGINEER	CALCULATED/DESIGNED BY	DATE	REVISED BY
MARK W. BURTON	M.W.B	04/05	
	CHECKED BY	R.M.S. 04/05	DATE REVISED

STATE OF CALIFORNIA - DEPARTMENT OF TRANSPORTATION

Caltrans

THIS PLAN ACCURATE FOR ELECTRICAL WORK ONLY.

SIGNAL AND LIGHTING CABLE REROUTE
TEMPORARY BYPASS STRUCTURE - VIADUCT

ALL DIMENSIONS ARE IN METERS UNLESS OTHERWISE SHOWN

SCALE 1:500

E-7

DIST	COUNTY	ROUTE	KILOMETER POST TOTAL PROJECT	SHEET NO.	TOTAL SHEETS
04	SF	80	12.6/13.2		

REGISTERED ELECTRICAL ENGINEER

PLANS APPROVAL DATE

The State of California or its officers or agents shall not be responsible for the accuracy or completeness of electronic copies of this plan sheet.

RECEIVED PROFESSIONAL ENGINEER MARK W. BURTON No. E015340 EXP 06/30/09 ELECTRICAL STATE OF CALIFORNIA

TRC

TABLE A - NEW ARMORED CABLE SCHEDULE (1)

CIRCUIT NO. (EXISTING)	DESCRIPTION	NEW CABLE SIZE	NEW CABLE TYPE	EXISTING CABLE SIZE	REMARKS
CKT #14-A	12.47 kV bridge power cable to Pier E-9 substation	3/C #4/0 + G	Armored 15 kV	3-1/C #2/0	
RTU East-A	RTU/Telephone communication cable	50-pr #18	Armored 600 V	50-pr #18	
CKT #241	480V power to Eastbound LD South-East temporary lighting	3/C #6 + G	Armored 600 V	3/C #6 + G	(3)
CKT #242	480V power to Eastbound LD North-East temporary light ng	3/C #6 + G	Armored 600 V	3/C #6 + G	(3)
CKT #243	480V power to Westbound UD South-West temporary light ng	3/C #6 + G	Armored 600 V	3/C #6 + G	(3)
CKT #244	480V power to Westbound UD North-West temporary light ng	3/C #6 + G	Armored 600 V	3/C #6 + G	(4)
CKT #249	480V power to Eastbound South-East temporary sign lighting	3/C #6 + G	Armored 600 V	3/C #6 + G	(3)
DC East-A	DC cable	40-pr #16	Armored 600 V	40-pr #16	
CKT #G30	Equipment ground and bridge tie	1-#500 MCM Insulated	600 V	1-#500 MCM Insulated	

TABLE B - NEW ARMORED CABLE SCHEDULE (1)

CIRCUIT NO. (EXISTING)	DESCRIPTION	NEW CABLE SIZE	NEW CABLE TYPE	EXISTING CABLE SIZE	REMARKS	FROM	TO
CKT #14-2T	12.47 kV bridge power cable to Pier E-9 substation	3/C #4/0 + #3G	Armored 15 kV	3-1/C #2/0		(E) splice box in (E) MH-1	(N) Splice Box at "ED2" 56+15
RTU East-2T	RTU/Telephone communication cable	50-pr #18	Armored 600 V	50-pr #18		(E) TB-30 in (E) MH-3	Relocated RTU #8 at (E) Pier E1
DC East-2T	DC cable	40/C #16	Armored 600 V	40/C #16		(E) TB-30 in (E) MH-3	(N) Control Cable Term Box at (E) Pier E1
CKT #241-2T	480V power to Eastbound LD South-East temporary lighting	3/C #6 + G	Armored 600 V	3/C #6 + G	(5)	(E) TB-20E in (E) MH-2	(E) Light fixtures to remain near Pier E1.
CKT #242-2T	480V power to Eastbound LD North-East temporary lighting	3/C #6 + G	Armored 600 V	3/C #6 + G	(5)	(E) TB-20E in (E) MH-2	(E) Light fixtures to remain near Pier E1.
CKT #243-2T	480V power to Westbound UD South-West temporary lighting	3/C #6 + G	Armored 600 V	3/C #6 + G	(5)	(E) TB-20E in (E) MH-2	(E) Light fixtures to remain near Pier E1.
CKT #244-2T	480V power to Westbound UD North-West temporary lighting	3/C #6 + G	Armored 600 V	3/C #6 + G	(6)	(E) LVCC-C control Center (CKT #29)	(E) Light fixtures to remain near Pier E1.
CKT #G30-2T	Equipment ground and bridge tie	1-#500 MCM Insulated	600 V	1-#500 MCM Insulated		Splice Point in (E) vault #2A	Splice Point near (E) Pier E1

PULL BOX SCHEDULE (2)

SYSTEM VOLTAGE	MINIMUM DIMENSIONS	INCLUDED CABLE
600 V	610 W x 610 D x 813 H	15-2, SC
12.47 kV	457 W x 610 D x 1000 H	14
300 V & Below	457 W x 457 D x 810 H	15-1

SHEET NOTES:

(1) Intercept and re-route existing circuits shown in table A and B with new cable.

(2) Pull box dimensions/voltage apply to cables listed in pull box schedule. Other required pull boxes to be selected according to this table and Standard Specifications

(3) Install and connect new cables from existing circuits #241, #242, #243 and #249 in (E) TB-20E and route to temporary South-South detour lower deck lighting circuits.

(4) Route temporary cable to temporary South-South detour UD North-East lighting to remain.

(5) Install and connect new cables from existing circuits #241, #242 and #249 in (E) TB-20E and route to temporary South-South detour lower deck lighting circuits.

(6) At (E) LVCC-C located in (E) YB1 substation, install and splice new temporary cable for CKT #244- and route temporary cable to temporary South-South detour UD North-East lighting to remain.

CONTRACT NO. 04-0120R4

CONTRACT CHANGE ORDER NO 134

SHEET 53 OF 94

VIADUCT ELECTRICAL
print date: 10/3/2008 Time: 9:57:08 AM

SIGNAL AND LIGHTING CABLE SCHEDULES
TEMPORARY BYPASS STRUCTURE - VIADUCT

NO SCALE

ALL DIMENSIONS ARE IN MILLIMETERS UNLESS OTHERWISE SHOWN

E-8

STATE OF CALIFORNIA - DEPARTMENT OF TRANSPORTATION | PROJECT ENGINEER MARK W. BURTON | CALCULATED/DESIGNED BY | CHECKED BY | DATE REVISED | REVISED BY | DATE | REVISED BY

M.W.B. 04/05 R.M.S. 04/05

THIS PLAN ACCURATE FOR ELECTRICAL WORK ONLY.

10/3/2008 9:57:08 AM R:\Soy Bridge\Electrical Plans\48120ru0606.dgn

DIST	COUNTY	ROUTE	KILOMETER POST TOTAL PROJECT	SHEET NO	TOTAL SHEETS
04	SF	80	12.6/13.2		

REGISTERED ELECTRICAL ENGINEER

PLANS APPROVAL DATE

The State of California or its officers or agents shall not be responsible for the accuracy or completeness of electronic copies of this plan sheet.

REGISTERED PROFESSIONAL ENGINEER MARK W. BURTON E015340 EXP 06/30/09 ELECTRICAL STATE OF CALIFORNIA

TRC

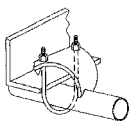

Conduit at right angles to the beam

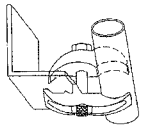

Conduit parallel to the beam

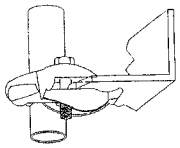

For mounting pipe or conduit vertically across beam edge

CONDUIT MOUNTING DETAILS

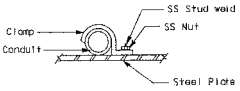

CONDUIT/CABLE MOUNTING DETAIL

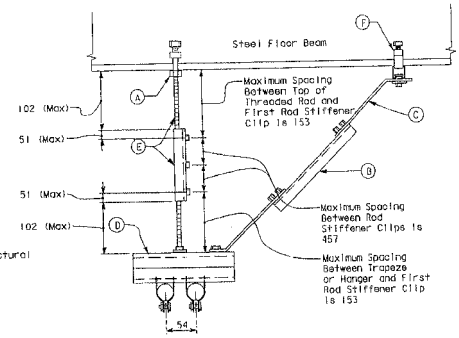

TYPICAL DETAIL

ARMORED CABLE MOUNTING DETAIL
BELOW LOWER DECK
NO SCALE

MATERIAL LIST

Item No.	Description
A	Beam C-Clamp with Locknut and Set Screw
B	Strut transverse brace for seismic support
C	Hinged seismic bracket with retaining clip
D	Strut channel, 41 mm x 82 mm
E	Threaded rod (13 mm) with stiffener & stiffener clips
F	C-Clamp with Locknut

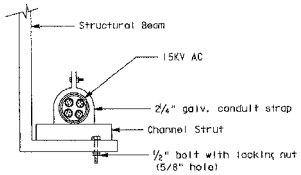

MOUNTING DETAIL FOR 15 KV AC UPPER DECK-SOUTHSIDE

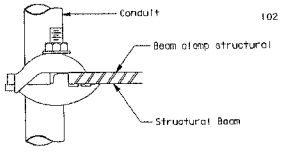

TYPICAL CONDUIT CLAMP MOUNTING

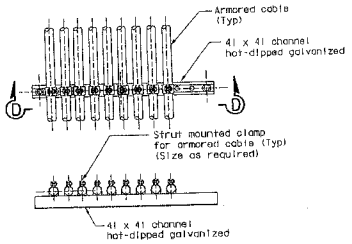

SECTION D-D

TYPICAL DETAIL

ARMORED CABLE MOUNTING DETAIL
NO SCALE

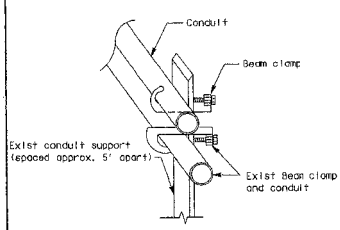

TYPICAL CONDUIT MOUNTING ON METAL STICK

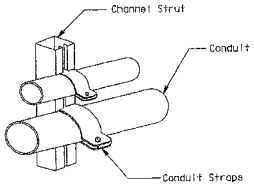

TYPICAL CONDUIT MOUNTING ON STRUT

CONTRACT NO. 04-0120R4

CONTRACT CHANGE ORDER NO 134

SHEET 54 OF 94

VIADUCT ELECTRICAL
Print date: 10/3/2008 Time: 9:57:44 AM

SIGNAL AND LIGHTING DETAILS
TEMPORARY BYPASS STRUCTURE - VIADUCT

NO SCALE

ALL DIMENSIONS ARE IN METERS UNLESS OTHERWISE SHOWN

E-17A

THIS PLAN ACCURATE FOR ELECTRICAL WORK ONLY.

STATE OF CALIFORNIA - DEPARTMENT OF TRANSPORTATION

Caltrans

PROJECT ENGINEER: MARK W. BURTON

CALCULATED/DESIGNED BY: M.W.B. DATE: 04/05 REVISED BY

CHECKED BY: R.M.S. DATE: 04/05 DATE REVISED

10/3/2008 9:57:44 AM H:\Bay Bridge\Electrical Plans\4012Orad17a.dgn

DIST	COUNTY	ROUTE	KILOMETER POST TOTAL PROJECT	SHEET No	TOTAL SHEETS
04	SF	80	12.6/13.2		

REGISTERED ELECTRICAL ENGINEER

PLANS APPROVAL DATE

The State of California or its officers or agents shall not be responsible for the accuracy or completeness of electronic copies of this plan sheet.

REGISTERED PROFESSIONAL ENGINEER MARK W. BURTON E015340 EXP 06/30/05 ELECTRICAL STATE OF CALIFORNIA

TRC

Caltrans Metric

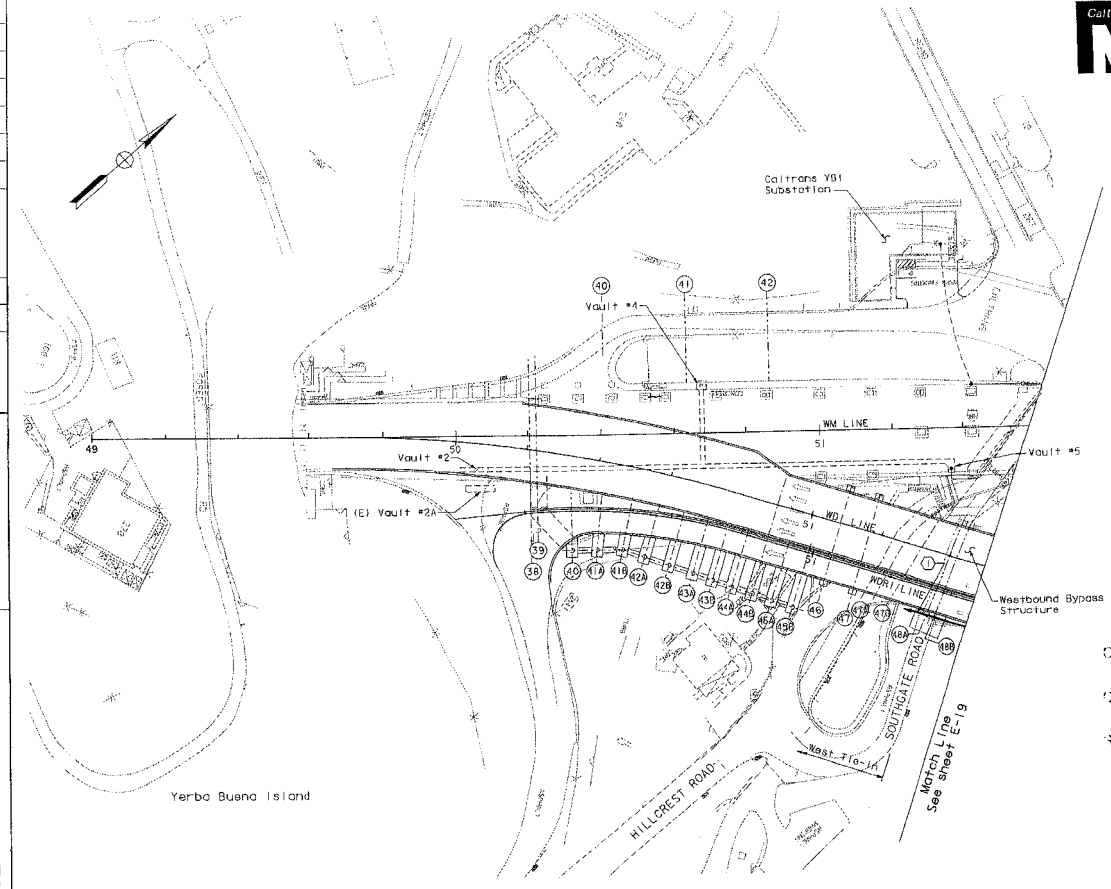

SHEET NOTES:

1. See West Tie-In drawings for continuation and for additional luminaires.

CONTRACT NO. 04-0120R4

CONTRACT CHANGE ORDER NO 134

SHEET 55 OF 94

VIADUCT ELECTRICAL
Print date: 10/3/2008 Time: 9:58:04 AM

PLAN - WESTBOUND

LIGHTING WESTBOUND
TEMPORARY BYPASS STRUCTURE - VIADUCT

SCALE 1:500

ALL DIMENSIONS ARE IN METERS UNLESS OTHERWISE SHOWN

E-18

STATE OF CALIFORNIA - DEPARTMENT OF TRANSPORTATION

Caltrans

PROJECT ENGINEER: MARK W. BURTON

CALCULATED/DESIGNED BY: N.W.B. DATE: 04/05 REVISED BY:

CHECKED BY: R.M.S. 04/05 DATE REVISED:

THIS PLAN ACCURATE FOR ELECTRICAL WORK ONLY.

10/3/2008 9:58:04 AM H:\Bay Bridge\Electrical Plans\4012Oru018.dgn

DIST	COUNTY	ROUTE	TOTAL PROJECT	NO.	SHEETS
04	SF	80	12.6/13.2		

REGISTERED ELECTRICAL ENGINEER

PLANS APPROVAL DATE

The State of California or its officers or agents shall not be responsible for the accuracy or completeness of electronic copies of this plan sheet.

REGISTERED PROFESSIONAL ENGINEER
Mark W. Burton
E015340
EXP 06/30/09
ELECTRICAL
STATE OF CALIFORNIA

TRC

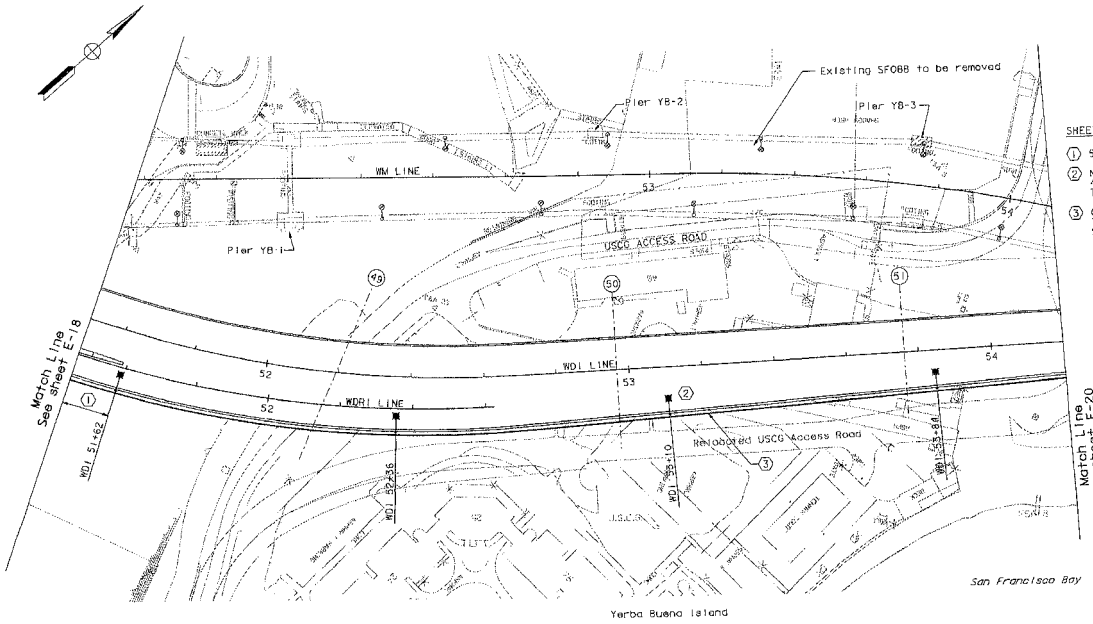

SHEET NOTES:

1. 55 m between luminaires for deceleration lane.
2. New type 21 fixtures, pole mounted onto barriers. 400 v HPS luminaries on on 3.7 m mounting arms. Typical for new westbound fixtures.
3. CKT #243-2T and #244-2T within cable tray. Typical for electroliers for westbound roadway. See Details on sheets E-25 and E-26.

Note:

1. See sheet E-24 for luminare, circuit and fuse details.

CONTRACT NO. 04-0120R4

CONTRACT CHANGE ORDER NO 134

SHEET 56 OF 94

VIADUCT ELECTRICAL
Print date: 10/3/2008 Time: 9:58:26 AM

PLAN - WESTBOUND

LIGHTING WESTBOUND
TEMPORARY BYPASS STRUCTURE - VIADUCT

SCALE 1:500

ALL DIMENSIONS ARE IN METERS UNLESS OTHERWISE SHOWN

E-19

STATE OF CALIFORNIA - DEPARTMENT OF TRANSPORTATION
Caltrans

PROJECT ENGINEER: MARK W. BURTON

CALCULATED/DESIGNED BY: M.W.B. DATE: 04/05 REVISED BY:
CHECKED BY: R.M.S. DATE: 04/05 DATE REVISED:

THIS PLAN ACCURATE FOR ELECTRICAL WORK ONLY.

10/3/2008 9:58:26 AM H:\Bay Bridge\Electrical Plans\4012Ar\ud019.dgn

DIST	COUNTY	ROUTE	TOTAL PROJECT	NO	SHEETS
04	SF	80	12.6/13.2		

REGISTERED ELECTRICAL ENGINEER

PLANS APPROVAL DATE

The State of California or its officers or agents shall not be responsible for the accuracy or completeness of electronic duplicates of this plan sheet.

E015340 EXP 06/30/09 REGISTERED PROFESSIONAL ENGINEER ELECTRICAL STATE OF CALIFORNIA

TRC

Caltrans Metric

STATE OF CALIFORNIA - DEPARTMENT OF TRANSPORTATION

Caltrans

PROJECT ENGINEER: MARK W. BURTON

CALCULATED/DESIGNED BY: M.W.B. DATE 04/09

CHECKED BY: R.M.S. DATE 04/09

REVISED BY

DATE REVISED

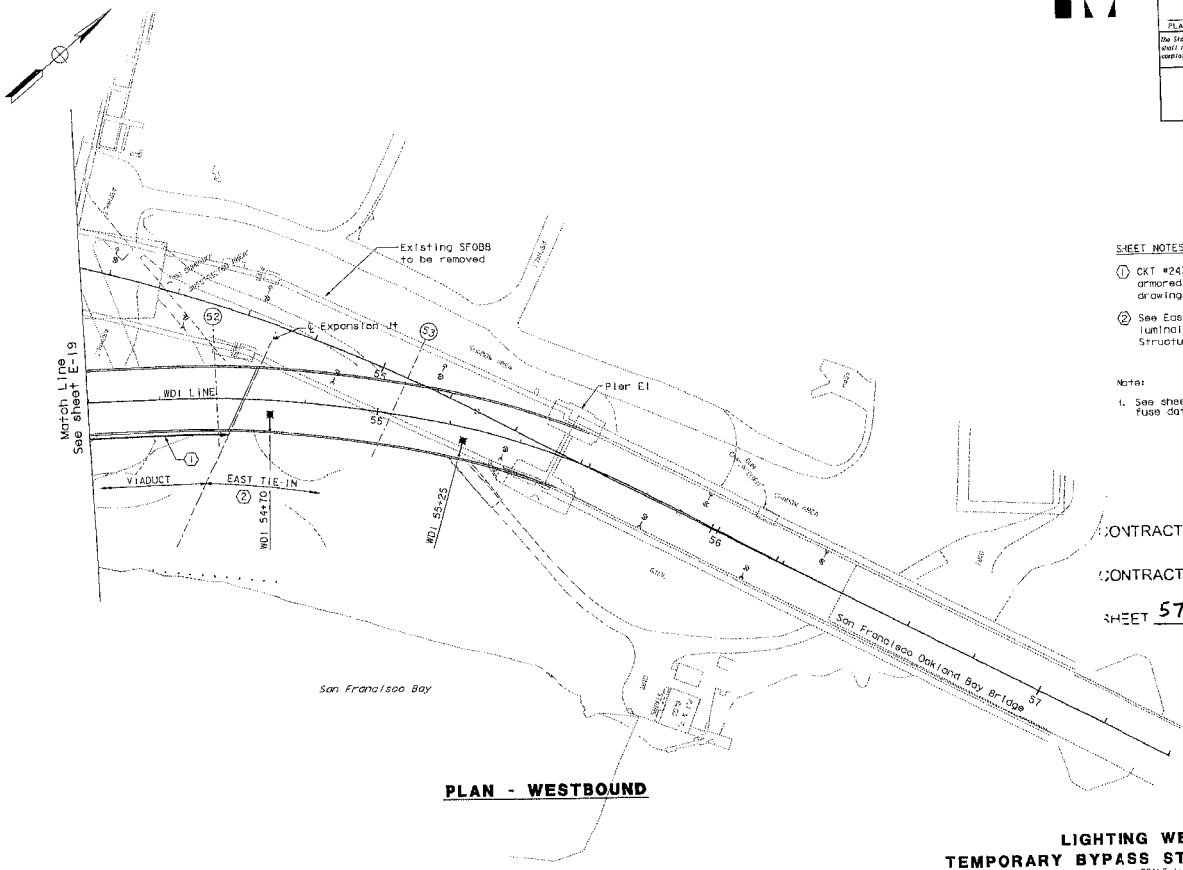

PLAN - WESTBOUND

SHEET NOTES:

1. CKT #243-2T and #244-2T. Three #6+G armored cables per circuit. See East Tie-In drawings for continuation.
2. See East Tie-In design drawings for luminaires at 54+70, 55+25 and existing structure.

Note:

1. See sheet E-24 for luminaire, circuit and fuse details.

CONTRACT NO. 04-0120R4

CONTRACT CHANGE ORDER NO 134

SHEET 57 OF 94

VIADUCT ELECTRICAL
Print date 10/3/2008 Time 9:58:46 AM

LIGHTING WESTBOUND
TEMPORARY BYPASS STRUCTURE - VIADUCT

ALL DIMENSIONS ARE IN METERS UNLESS OTHERWISE SHOWN

SCALE 1:500

E-20

THIS PLAN ACCURATE FOR ELECTRICAL WORK ONLY.

10/3/2008 9:58:46 AM M:\Bay Bridge\Electrical Plans\e0120ru0020.dgn

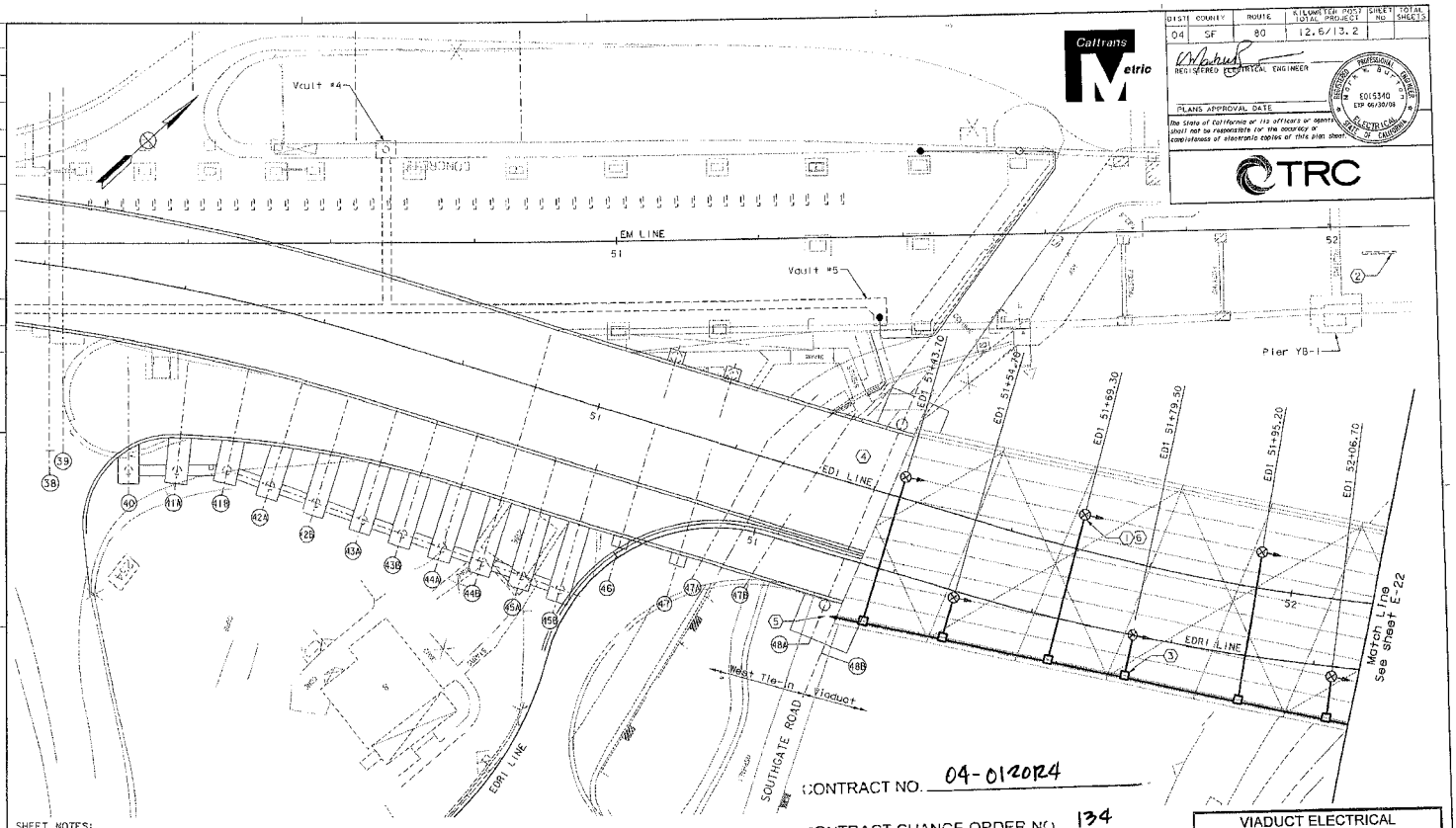

DIST	COUNTY	ROUTE	KILOMETER POST TOTAL PROJECT	SHEET NO	TOTAL SHEETS
04	SF	80	12.6/13.2		

REGISTERED ELECTRICAL ENGINEER

PLANS APPROVAL DATE

The State of California or its officers or agents shall not be responsible for the accuracy or completeness of electronic copies of this plan sheet.

REGISTERED PROFESSIONAL ENGINEER E005340 EXP 06/30/09 ELECTRICAL STATE OF CALIFORNIA

Caltrans Metric

TRC

CONTRACT NO. 04-012024

CONTRACT CHANGE ORDER NO 134

SHEET 58 OF 94

VIADUCT ELECTRICAL
Print date: 10/3/2008 Time: 9:59:06 AM

SHEET NOTES:

1. Type III Short soffit fixtures. 150W HPS. Secured to steel structure of Westbound deck. See sheet E-27.
2. Existing Eastbound fixtures to be removed
3. Junction box with feeder splices and fusec protection for each fixture conductor der ved.
4. Coordinate with West Tie-In light fixture placements to confirm fixtures will continue alternating pattern North and South of EDI line.
5. See West tie-In drawings for continuation.
6. Westbound deck structure shown for reference. Secure fixtures approx 1 meter East of floor beam or portal, oriented in the direction of travel.

THIS PLAN ACCURATE FOR ELECTRICAL WORK ONLY.

PLAN - EASTBOUND

LIGHTING EASTBOUND
TEMPORARY BYPASS STRUCTURE - VIADUCT

ALL DIMENSIONS ARE IN METERS UNLESS OTHERWISE SHOWN

SCALE 1:250

E-21

STATE OF CALIFORNIA - DEPARTMENT OF TRANSPORTATION
Caltrans

PROJECT ENGINEER
MARK W. BURTON

CALCULATED/ DESIGNED BY	DATE	REVISED BY	DATE REVISED
N.K.B.	8/04/05		
CHECKED BY	DATE		
R.H.S.	8/04/05		

10/3/2008 9:59:06 AM d:\bay Bridges\Elect\Plans\Post Plans\401204ru0021.dgn

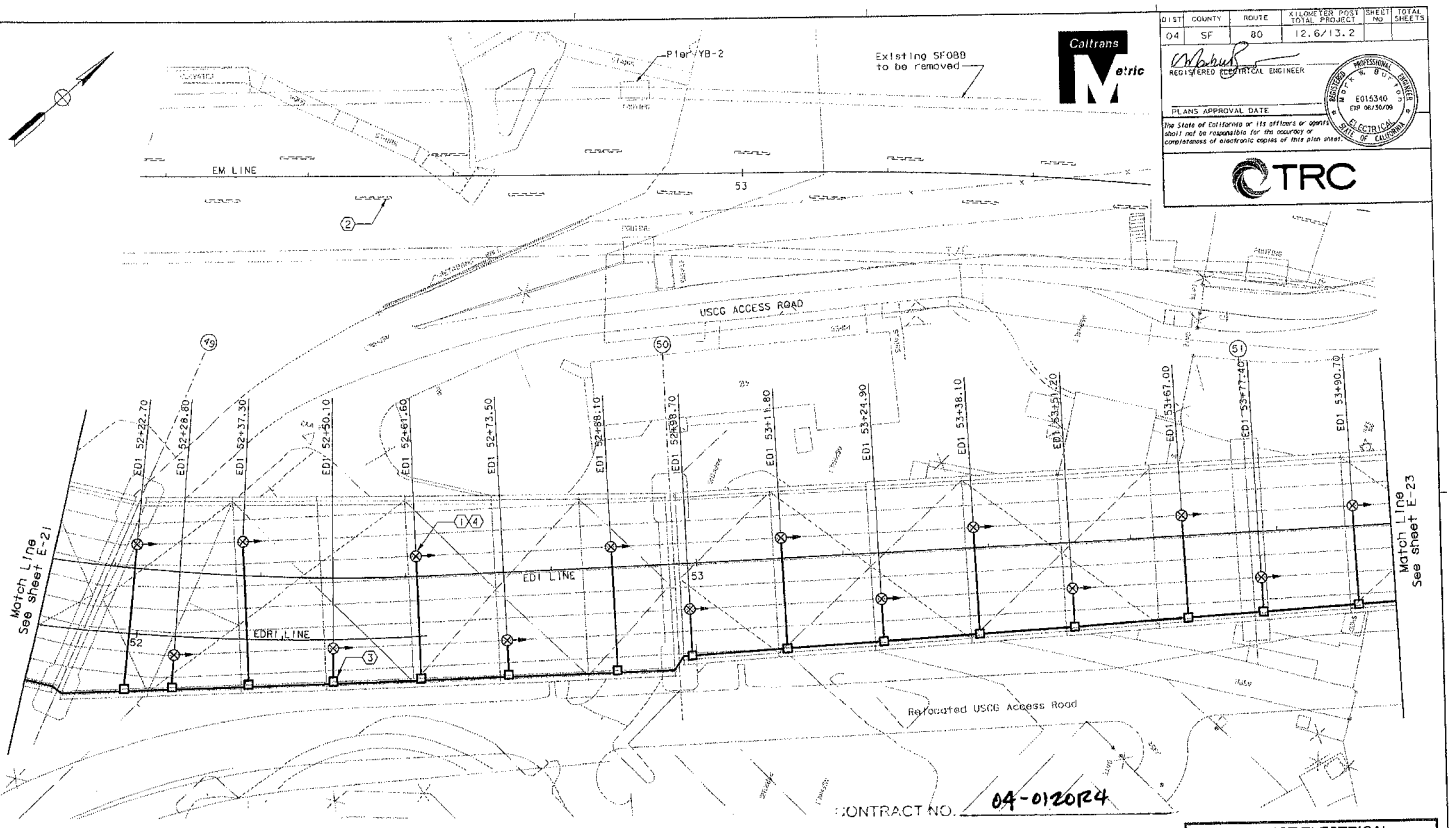

DIST	COUNTY	ROUTE	KILOMETER POST TOTAL PROJECT	SHEET NO	TOTAL SHEETS
04	SF	80	12.6/13.2		

REGISTERED ELECTRICAL ENGINEER

PLANS APPROVAL DATE

E015340 EXP 06/30/09

The State of California or its officers or agents shall not be responsible for the accuracy or completeness of electronic copies of this plan sheet.

TRC

CALCULATED/ DESIGNED BY	DATE	REVISED BY	DATE REVISED
K.M.S.	04/05	K.M.S.	04/05
CHECKED BY			

STATE OF CALIFORNIA - DEPARTMENT OF TRANSPORTATION
Caltrans
PROJECT ENGINEER
MARK W. BURTON

SHEET NOTES:

1. Type III Short soffit fixtures. 150W HPS. Secured to steel structure of Westbound deck. See sheet E-27.
2. Existing Eastbound fixtures to be removed.
3. Junction box with feeder splices and fuse protection for each fixture conductor derived.
4. Secure fixtures approx 1 meter East of floor beam or portal, oriented in the direction of travel.

THIS PLAN ACCURATE FOR ELECTRICAL WORK ONLY.

10/3/2008 9:59:25 AM H:\Bay Bridge\Electrical Plans\04120rus022.dgn

PLAN - EASTBOUND

CONTRACT NO. 04-0120R4

CONTRACT CHANGE ORDER NO 134

VIADUCT ELECTRICAL
Print date: 10/3/2008 Time: 9:59:25 AM

SHEET 59 OF 94

LIGHTING EASTBOUND
TEMPORARY BYPASS STRUCTURE - VIADUCT

SCALE 1:250

ALL DIMENSIONS ARE IN METERS UNLESS OTHERWISE SHOWN

E-22

LAST REVISION

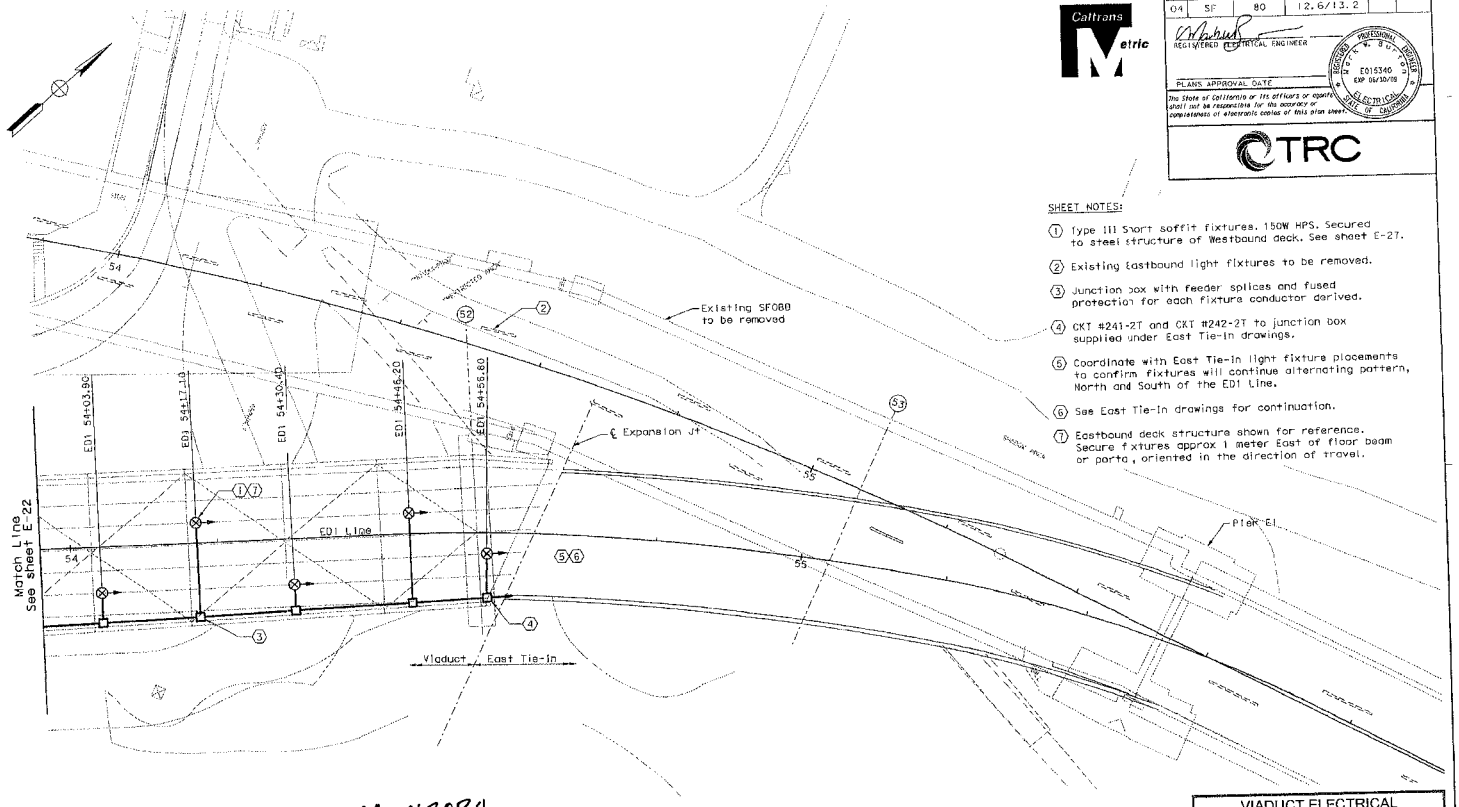

DIST	COUNTY	ROUTE	KILOMETER POST TOTAL PROJECT	SHEET NO.	TOTAL SHEETS
04	SF	80	12.6/13.2		

REGISTERED ELECTRICAL ENGINEER

PLANS APPROVAL DATE

The State of California or its officers or agents shall not be responsible for the accuracy or completeness of electronic copies of this plan sheet.

PROFESSIONAL ENGINEER — E015340 — EXP 06/30/09 — ELECTRICAL — STATE OF CALIFORNIA

Caltrans Metric

TRC

SHEET NOTES:

1. Type III Short soffit fixtures. 150W HPS. Secured to steel structure of Westbound deck. See sheet E-27.
2. Existing Eastbound light fixtures to be removed.
3. Junction box with feeder splices and fused protection for each fixture conductor derived.
4. CKT #241-2T and CKT #242-2T to junction box supplied under East Tie-In drawings.
5. Coordinate with East Tie-In light fixture placements to confirm fixtures will continue alternating pattern, North and South of the ED1 Line.
6. See East Tie-In drawings for continuation.
7. Eastbound deck structure shown for reference. Secure fixtures approx 1 meter East of floor beam or parts, oriented in the direction of travel.

VIADUCT ELECTRICAL
Print date: 10/3/2008 Time: 8:59:44 AM

CONTRACT NO. 04-0120R4

CONTRACT CHANGE ORDER NO 134

SHEET 60 OF 94

PLAN - EASTBOUND

LIGHTING EASTBOUND
TEMPORARY BYPASS STRUCTURE - VIADUCT

SCALE 1:250

ALL DIMENSIONS ARE IN METERS UNLESS OTHERWISE SHOWN

E-23

STATE OF CALIFORNIA - DEPARTMENT OF TRANSPORTATION
Caltrans

PROJECT ENGINEER
MARK W. BURTON

CALCULATED/DESIGNED BY | DATE | REVISED BY | DATE REVISED
M.W.B. | 04/05 | R.M.S. | 04/05 | CHECKED BY

THIS PLAN ACCURATE FOR ELECTRICAL WORK ONLY.

10/3/2008 8:59:44 AM N:\Bay Bridge\Electrical Plans\04120ru0025.dgn

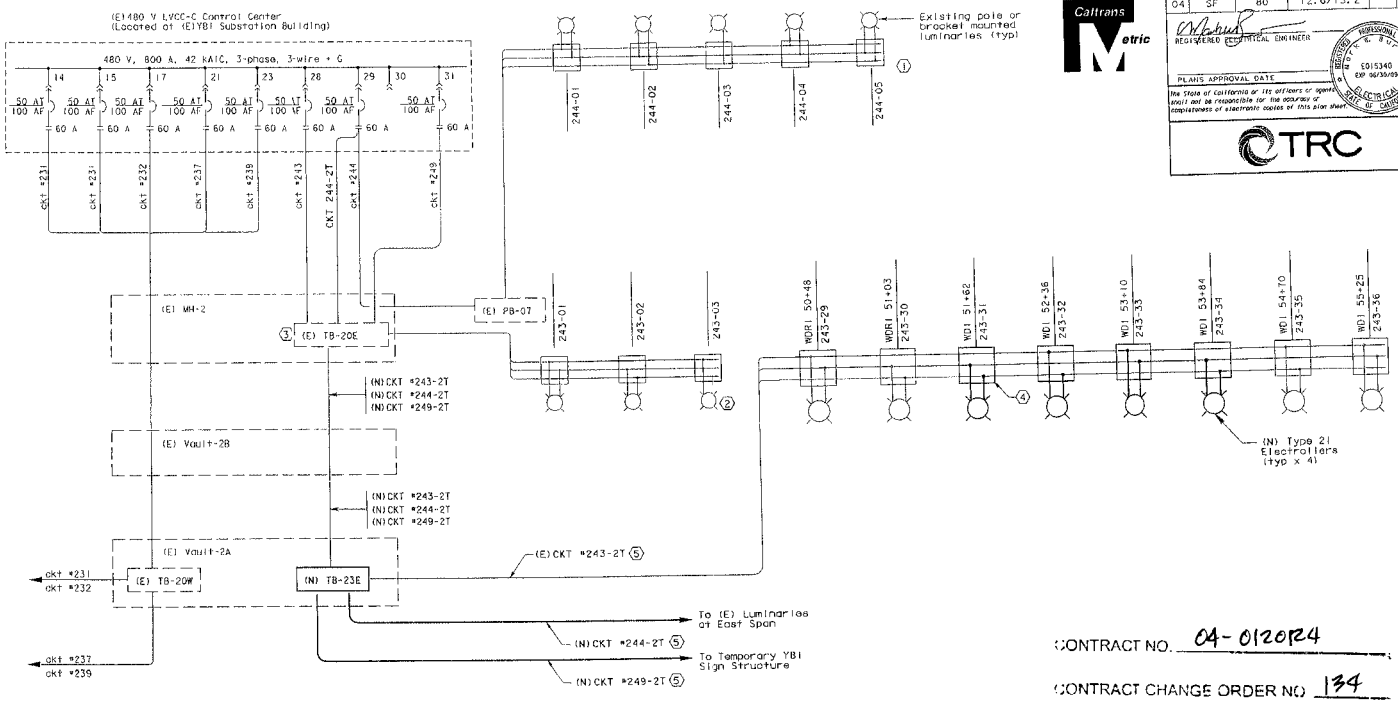

DIST	COUNTY	ROUTE	FILEMENT POST TOTAL PROJECT	SHEET NO.	TOTAL SHEETS
04	SF	80	12.6/13.2		

REGISTERED ELECTRICAL ENGINEER

PLANS APPROVAL DATE

The State of California or its officers or agents shall not be responsible for the accuracy or completeness of electronic copies of this plan sheet.

REGISTERED PROFESSIONAL ENGINEER MARK W. BURTON E015340 EXP 06/30/09 ELECTRICAL STATE OF CALIFORNIA

Caltrans Metric

TRC

CONTRACT NO. 04-0120R4

CONTRACT CHANGE ORDER NO. 134

SHEET 61 OF 94

VIADUCT ELECTRICAL
Print date: 10/3/2008 Time: 10:00:23 AM

SHEET NOTES:

1. Existing Luminaires 244-06 through 244-17 to be removed in bridge demolition (Westbound North).
2. Existing Luminaires 243-04 through 243-16 to be removed in bridge demolition (Westbound South).
3. Intercept circuits #243, #244 and #249 in MH-2. Route on bypass structure via (E) vault 2A and reconnect to cables supplying luminaires to remain.
4. Fused splice connectors to be used for each ungrounded conductors between line and ballast (Typical).
5. (N) armored Cables on Cable Tray to Viaduct and to East Span

NOTES:

1. Reference:
   - For Cable Schedule, see E-8

LIGHTING - DIAGRAMS WESTBOUND
TEMPORARY BYPASS STRUCTURE - VIADUCT

NO SCALE

ALL DIMENSIONS ARE IN METERS UNLESS OTHERWISE SHOWN

E-24

THIS PLAN ACCURATE FOR ELECTRICAL WORK ONLY.

STATE OF CALIFORNIA - DEPARTMENT OF TRANSPORTATION
Caltrans

PROJECT ENGINEER: MARK W. BURTON

CALCULATED/DESIGNED BY: R.W.B. DATE 04/05 REVISED BY
CHECKED BY: R.M.S. 04/05 DATE REVISED

10/3/2008 10:00:23 AM H:\Bay Bridge\Electrical Plans\40120rd024.dgn

DIST	COUNTY	ROUTE	KILOMETER POST TOTAL PROJECT	SHEET NO	TOTAL SHEETS
04	SF	80	12.6/13.2		

REGISTERED ELECTRICAL ENGINEER

PLANS APPROVAL DATE

The State of California or its officers or agents shall not be responsible for the accuracy or completeness of electronic copies of this plan sheet.

REGISTERED PROFESSIONAL ENGINEER MARK W. BURTON E015340 EXP 06/30/09 ELECTRICAL STATE OF CALIFORNIA

TRC

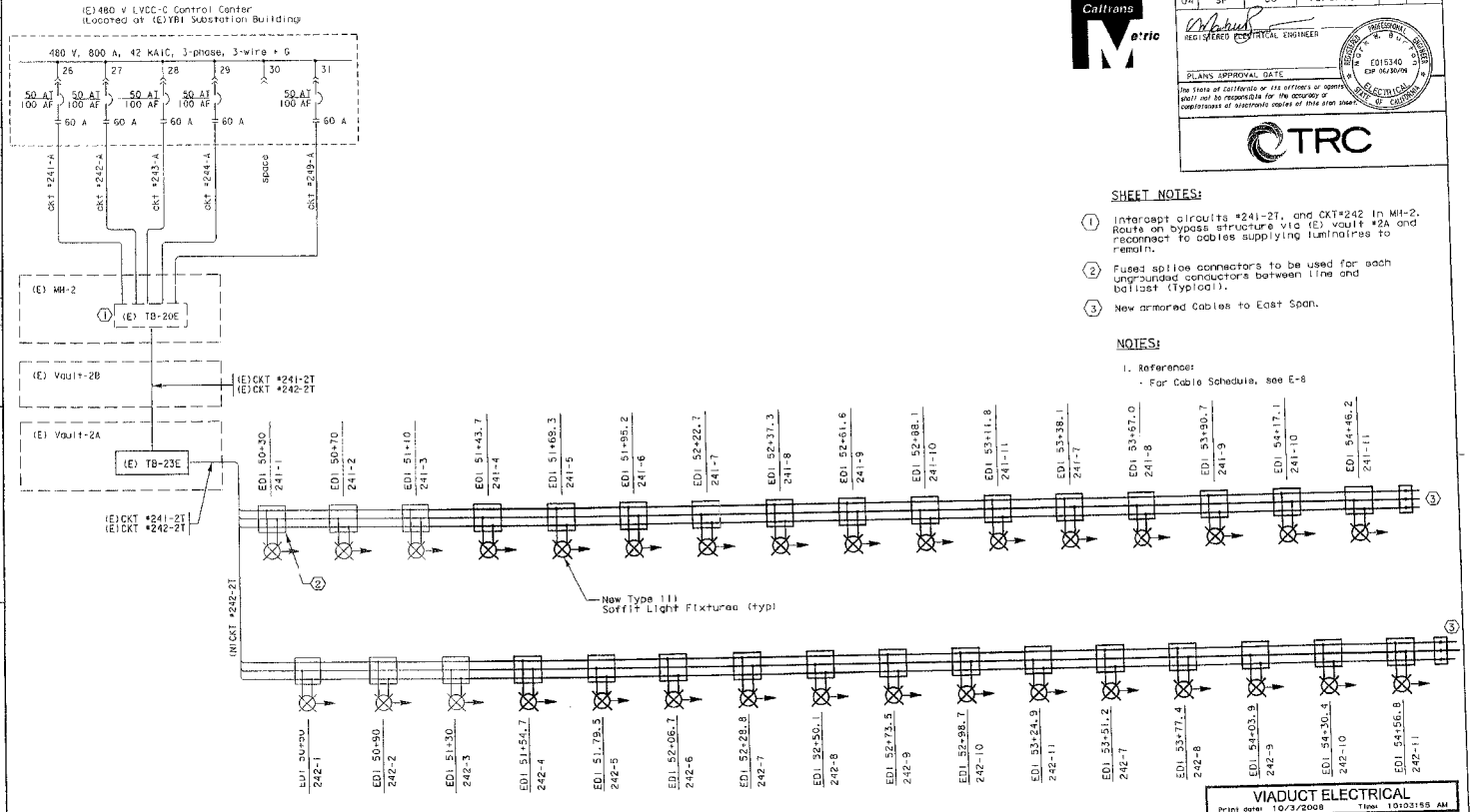

SHEET NOTES:

1. Intercept circuits #241-2T, and CKT#242 in MH-2. Route on bypass structure via (E) vault #2A and reconnect to cables supplying luminaires to remain.
2. Fused splice connectors to be used for each ungrounded conductors between line and ballast (Typical).
3. New armored Cables to East Span.

NOTES:

1. Reference:
   - For Cable Schedule, see E-8

VIADUCT ELECTRICAL
Print date: 10/3/2008 Time: 10:03:55 AM

CONTRACT NO. 04-0120R4

CONTRACT CHANGE ORDER NO 134

SHEET 62 OF 94

LIGHTING - DIAGRAMS EASTBOUND
TEMPORARY BYPASS STRUCTURE - VIADUCT

NO SCALE

ALL DIMENSIONS ARE IN METERS UNLESS OTHERWISE SHOWN

E-24A

THIS PLAN ACCURATE FOR ELECTRICAL WORK ONLY.

STATE OF CALIFORNIA - DEPARTMENT OF TRANSPORTATION

Caltrans

PROJECT ENGINEER MARK W. BURTON

CALCULATED/DESIGNED BY M.K.B. DATE 04/05

CHECKED BY R.M.S. DATE 04/05

REVISED BY

DATE REVISED

10/3/2008 10:03:55 AM\\bay bridge\Electrical Plans\40120ru0024a.dgn

DIST	COUNTY	ROUTE	KILOMETER POST TOTAL PROJECT	SHEET No	TOTAL SHEETS
04	SF	80	12.6/13.2		

REGISTERED ELECTRICAL ENGINEER

PLANS APPROVAL DATE

The State of California or its officers or agents shall not be responsible for the accuracy or completeness of electronic copies of this plan sheet.

REGISTERED PROFESSIONAL ENGINEER MARK W. BURTON E015340 EXP 09/30/08 ELECTRICAL STATE OF CALIFORNIA

TRC

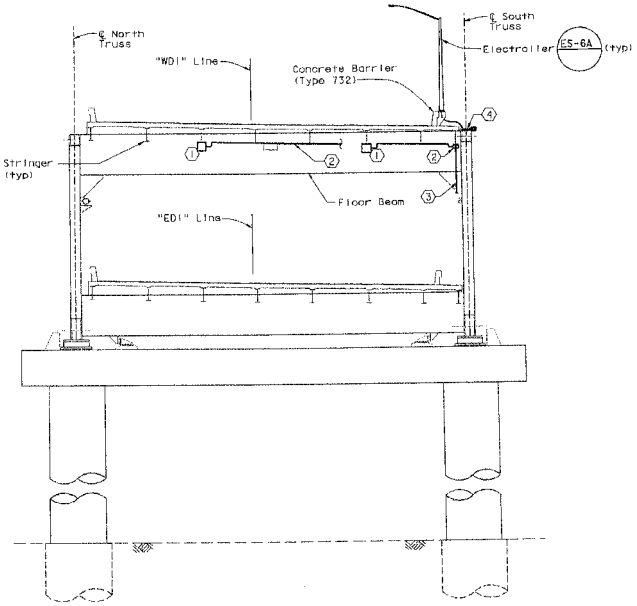

SECTION AT BENT 51
1:100

CONTRACT NO. 04-0120R4

CONTRACT CHANGE ORDER NO 134

SHEET 63 OF 94

SHEET NOTES:

1. Install Type III Soffit Fixture (Luminaire), for details see sheets E-26 and E-27.
2. Conduit and junction boxes, per sheet E-21 (typ), in line with conduit containing CKTS 241-2T and 242-2T. Secure conduit and juction boxes to first longitudinal member inside South truss.
3. Offset conduit below or around floor beams, outside of traffic lanes.
4. See sheet E-4A and E-26 for cable tray details.

VIADUCT ELECTRICAL
Print date: 10/3/2008 Time: 9:53:11 AM

STATE OF CALIFORNIA - DEPARTMENT OF TRANSPORTATION
Caltrans

PROJECT ENGINEER: MARK W. BURTON
CALCULATED/DESIGNED BY: M.W.B. DATE: 04/05 REVISED BY
CHECKED BY: R.M.S. DATE: 04/05 DATE REVISED

THIS PLAN ACCURATE FOR ELECTRICAL WORK ONLY.

LIGHTING DETAILS
TEMPORARY BYPASS STRUCTURE - VIADUCT
SCALE AS NOTED
ALL DIMENSIONS ARE IN MILLIMETERS UNLESS OTHERWISE SHOWN

E-25

10/3/2008 9:53:11 AM H:\bay bridge\Electrical Plans\40120rwb025.dgn

DIST	COUNTY	ROUTE	KILOMETER POST TOTAL PROJECT	SHEET NO	TOTAL SHEETS
04	SF	80	12.6/13.2		

REGISTERED ELECTRICAL ENGINEER

PLANS APPROVAL DATE

The State of California or its officers or agents shall not be responsible for the accuracy or completeness of electronic copies of this plan sheet.

REGISTERED PROFESSIONAL ENGINEER MARK W. BURTON E015340 EXP 06/30/05 ELECTRICAL STATE OF CALIFORNIA

TRC

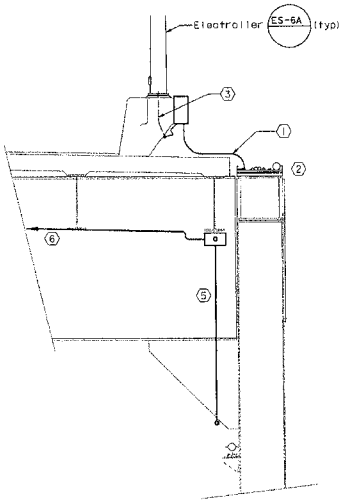

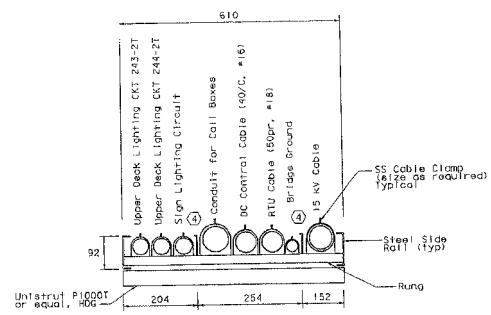

CABLE TRAY LAYOUT

SCALE: 1:5

SHEET NOTES:

1. Route lighting circuits in cable tray. Provide pull boxes and activation at electrollers as needed per standard specifications. See plan views for electroller and pull box locations.
2. Route remaining cables in cable tray. Secure to top of structural post or cantilever from bottom of girder. Provide and install pull boxes and termination boxes as shown and as needed by field conditions. See Detail on this sheet and sheet E-4A. Secure cables at intervals not to exceed 1.4m (4ft) and within 300mm (12in) of every box, outlet, fitting, etc. Secure cable with Stainless Steel cable cleats (Copper Emporer cleats or equal).
3. Install 27C conduit from center of pole base to bottom of barrier electroller support. Install 27C conduit with conductors and drip loop to junction box containing fused splice connectors.
4. Cable tray barrier pieces to create seperation between 12kv, 600v and control cable. Barriers and accesories to be by same manufacturer as tray system.
5. Conduit containing underdeck lighting circuits, offset below or around deck beams.
6. Lateral conduit to underdeck light fixtures.

CONTRACT NO. 04-0120R4

CONTRACT CHANGE ORDER NO 134

SHEET 64 OF 94

VIADUCT ELECTRICAL
Print date: 10/3/2006 Time: 3:52:30 PM

LIGHTING DETAILS
TEMPORARY BYPASS STRUCTURE - VIADUCT

SCALE AS NOTED

ALL DIMENSIONS ARE IN MILLIMETERS UNLESS OTHERWISE SHOWN

E-26

STATE OF CALIFORNIA - DEPARTMENT OF TRANSPORTATION

Caltrans

PROJECT ENGINEER: MARK W. BURTON

CALCULATED/DESIGNED BY: M.W.B. DATE: 04/05 REVISED BY

CHECKED BY: R.N.S. DATE: 04/05 DATE REVISED

THIS PLAN ACCURATE FOR ELECTRICAL WORK ONLY.

10/3/2006 3:52:30 PM JR\Bay Bridge\Electrical Plans\4012oru0026.dgn

DIST	COUNTY	ROUTE	KILOMETER POST TOTAL PROJECT	SHEET NO	TOTAL SHEETS
04	SF	80	12.6/13.2		

REGISTERED CIVIL ENGINEER

PLANS APPROVAL DATE

The State of California or its officers or agents shall not be responsible for the accuracy or completeness of electronic copies of this plan sheet.

REGISTERED PROFESSIONAL ENGINEER E015340 EXP 06/30/09 ELECTRICAL STATE OF CALIFORNIA

TRC

CONTRACT NO. 04-0120R4

CONTRACT CHANGE ORDER NO 134

SHEET 65 OF 94

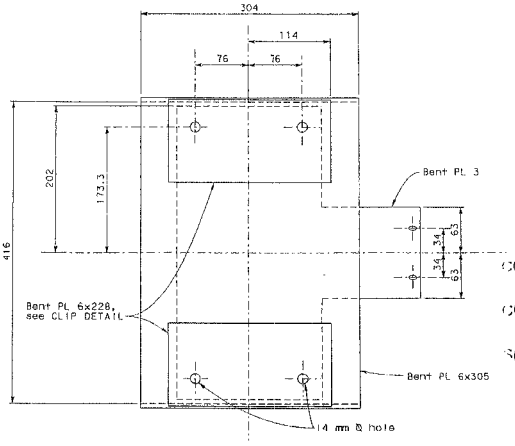

PLAN

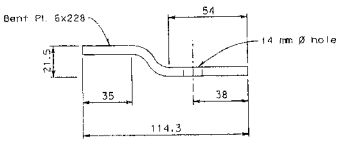

CLIP DETAIL

1:1

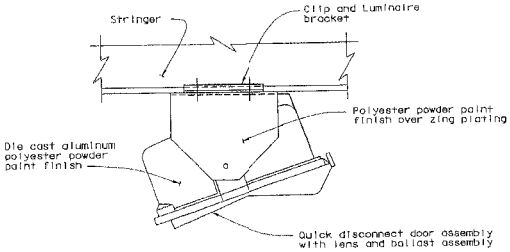

EASTBOUND LUMINAIRE MOUNTING DETAILS

1:5

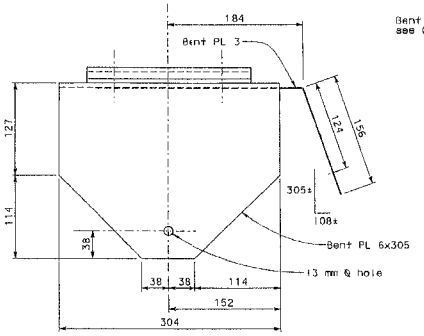

ELEVATION

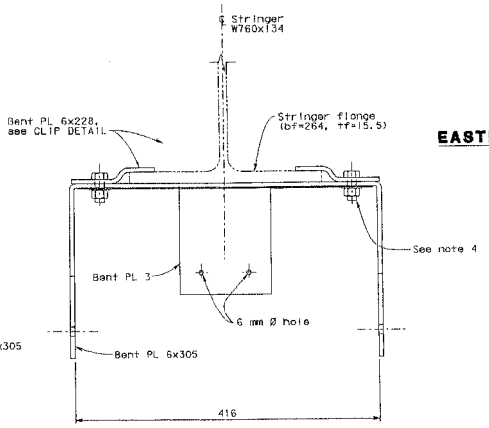

SECTION

LUMINAIRE BRACKET DETAILS

1:2.5

Notes:

1. The Contractor is to verify all controlling field dimensions before ordering or fabricating any material.
2. Fabricate bracket clips and brace from A36 steel grind sharp edges, hot dip galvanized.
3. Attach ½" diameter x 2" stainless steel bolts, with drilled hole in shank for stainless steel cotter pin, stainless steel flat washers, and stainless steel slotted nuts (all 18-8 stainless steel).

VIADUCT ELECTRICAL
Print date: 10/3/2008 Time: 10:04:39 AM

LIGHTING DETAILS

TEMPORARY BYPASS STRUCTURE - VIADUCT

SCALE AS NOTED

ALL DIMENSIONS ARE IN MILLIMETERS UNLESS OTHERWISE SHOWN

E-27

STATE OF CALIFORNIA - DEPARTMENT OF TRANSPORTATION

Caltrans

PROJECT ENGINEER: MARK W. BURTON

CALCULATED/DESIGNED BY: W.A.B. DATE 04/05

CHECKED BY: R.M.S. DATE 04/05

REVISED BY

DATE REVISED

THIS PLAN ACCURATE FOR ELECTRICAL WORK ONLY.

10/3/2008 10:04:39 AM H:\Sby Bridge\Electrical Plans\401204\e027.dgn

LOT 40-15-05

DIST	COUNTY	ROUTE	KILOMETER POST TOTAL PROJECT	SHEET NO	TOTAL SHEETS
04	SF	80	12.6/13.2		

REGISTERED ELECTRICAL ENGINEER

PROFESSIONAL ENGINEER — NICHOLAS W. BOYD — E015340 EXP 06/30/09 — ELECTRICAL — STATE OF CALIFORNIA

PLANS APPROVAL DATE

The State of California or its officers or agents shall not be responsible for the accuracy or completeness of electronic copies of this plan sheet.

TRC

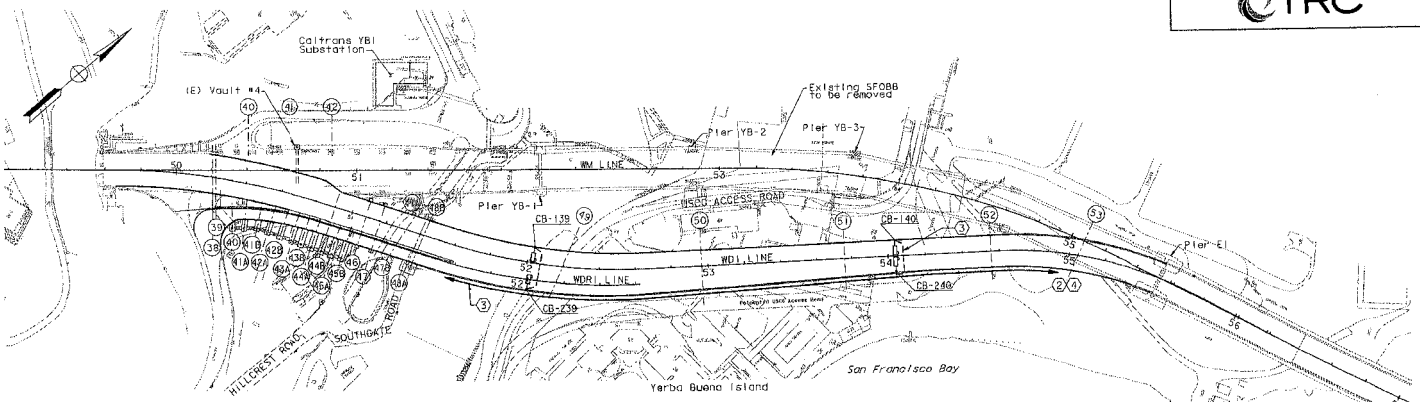

PLAN - WESTBOUND

CALL BOX SCHEDULE (1)			
Call Box Number	Station Location	Location Roadway Side	RTU Connection
CB-139	52+03	Westbound-North	RTU Station 8
CB-239	52+03	Westbound-South	RTU Station 8
CB-140	54+04	Westbound-North	RTU Station 8
CB-240	54+04	Westbound-South	RTU Station 8

SHEET NOTES:

(1) Remove call boxes from existing structure. Relocate call boxes at locations shown in Call Box Schedule. Remove existing power and signal cable from existing system. New signal and power cables to terminate within RTU #8.

(2) Install new 53C, 3 #8, 4-6 #16 conductor cable for relocated CB #139, #140, #239 and #24C. Route conduit on new cable tray on Upper Deck.

(3) Call box cable(s) to connect relocated call boxes. Secure to structure and in cable tray.

(4) Install new armored cable with 50 pair, #18 conductors.

CONTRACT NO. 04-0120R4

CONTRACT CHANGE ORDER NO 134

SHEET 66 OF 94

VIADUCT ELECTRICAL
Print date 10/3/2008 Time 10:04:58 AM

SIGNAL AND LIGHTING
CALL BOX LOCATIONS - WESTBOUND
TEMPORARY BYPASS STRUCTURE - VIADUCT

ALL DIMENSIONS ARE IN METERS UNLESS OTHERWISE SHOWN

NO SCALE

E-28

THIS PLAN ACCURATE FOR ELECTRICAL WORK ONLY.

10/3/2008 10:04:58 AM M:\809 BPEdge\Electrical\Plans\4012Rca028.dgn

STATE OF CALIFORNIA - DEPARTMENT OF TRANSPORTATION — Caltrans

PROJECT ENGINEER — MARK W. BURTON

CALCULATED/DESIGNED BY — W.W.B./KMS — DATE 04/05 — REVISED BY — DATE REVISED

CHECKED BY — R.M.S.

DIST	COUNTY	ROUTE	TOTAL PROJECT	NO	SHEETS
04	SF	80	12.6/13.2		

REGISTERED ELECTRICAL ENGINEER

PLANS APPROVAL DATE

The State of California or its officers or agents shall not be responsible for the accuracy or completeness of electronic copies of this plan sheet.

CONTRACT NO. 04-0120R4

CONTRACT CHANGE ORDER NO 134

SHEET 67 OF 94

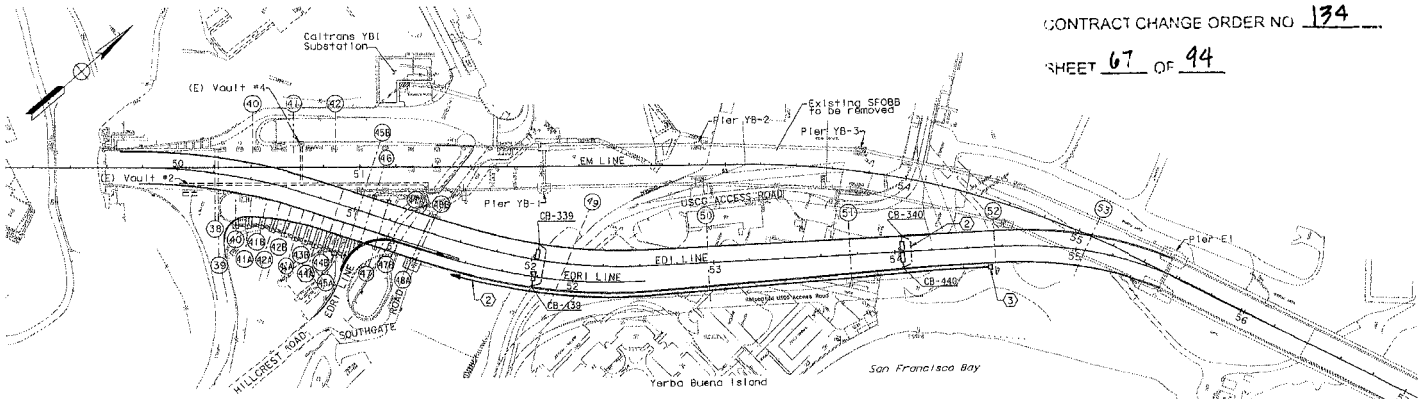

PLAN - EASTBOUND

SHEET NOTES:

1. Remove call boxes from existing structure. Relocate call boxes at locations shown in Call Box Schedule. Remove existing power and signal cable from existing system. New signal and power cables to terminate within RTU #8.
2. Call box cable(s) to connect relocated call boxes. Secure to structure and in cable tray.
3. Install new 53C, 3 #8, 4-6 #16 conductor cable for temporary call boxes. Route to new splice box provided under East Tie-in drawings.

CALL BOX SCHEDULE (1)

Call Box Number	Station Location	Location Roadway Side	RTU Connection
CB-339	52+03	Eastbound-North	RTU Station 8
CB-439	52+03	Eastbound-South	RTU Station 8
CB-340	54+04	Eastbound-North	RTU Station 8
CB-440	54+04	Eastbound-South	RTU Station 8

VIADUCT ELECTRICAL
Print date: 10/3/2008 Time: 10:05:17 AM

SIGNAL AND LIGHTING
CALL BOX LOCATIONS - EASTBOUND
TEMPORARY BYPASS STRUCTURE - VIADUCT

ALL DIMENSIONS ARE IN METERS UNLESS OTHERWISE SHOWN

NO SCALE

E-29

THIS PLAN ACCURATE FOR ELECTRICAL WORK ONLY.

STATE OF CALIFORNIA - DEPARTMENT OF TRANSPORTATION
Caltrans
PROJECT ENGINEER MARK W. BURTON
CALCULATED/DESIGNED BY M.K.B. DATE 04/08
CHECKED BY R.M.S. DATE 04/08
REVISED BY DATE REVISED

10/3/2008 10:05:17 AM H:\Bay Bridge\Electrical Plans\401204us029.dgn

DRAWING NO.	DRAWING TITLE
E-1	ELECTRICAL SHEET INDEX, SYMBOLS, ABBREVIATIONS AND NOTES TEMPORARY BYPASS STRUCTURE-EAST TIE IN
E-2	PROJECT NOTES TEMPORARY BYPASS STRUCTURE-EAST TIE IN
E-3	CALL BOX INSTALLATION TEMPORARY BYPASS STRUCTURE-EAST TIE IN
E-4	CABLE REROUTE INSTALLATION TEMPORARY BYPASS STRUCTURE-EAST TIE IN
E-5	WESTBOUND LIGHTING TEMPORARY BYPASS STRUCTURE-EAST TIE IN
E-6	EASTBOUND LIGHTING TEMPORARY BYPASS STRUCTURE-EAST TIE IN
E-7	EAST TIE-IN STRUCTURE-LIGHTING TEMPORARY BYPASS STRUCTURE-EAST TIE IN
E-8	TEMPORARY 12.47 kV POWER SYSTEM TEMPORARY BYPASS STRUCTURE-EAST TIE IN
E-9	DETAILS CABLE SCHEDULE TEMPORARY BYPASS STRUCTURE-EAST TIE IN
E-10	DETAILS WESTBOUND LIGHTING DIAGRAM TEMPORARY BYPASS STRUCTURE-EAST TIE IN
E-11	DETAILS EASTBOUND LIGHTING DIAGRAM TEMPORARY BYPASS STRUCTURE-EAST TIE IN
E-12	12.47 kV CABLE BLOCK DIAGRAM TEMPORARY BYPASS STRUCTURE-EAST TIE IN
E-13	DETAILS GROUND CONDUCTOR BLOCK DIAGRAM TEMPORARY BYPASS STRUCTURE-EAST TIE IN
E-14	SCADA AND COMMUNICATION CABLE BLOCK DIAGRAM TEMPORARY BYPASS STRUCTURE-EAST TIE IN
E-15	ELEVATION (E) RTU #8 RELOCATION WORK TEMPORARY BYPASS STRUCTURE-EAST TIE IN
E-16	DETAILS NEW RTU #8 STATION TEMPORARY BYPASS STRUCTURE-EAST TIE IN
E-17	DETAILS (E) RTU #8 RELOCATION WORK BLOCK DIAGRAM FIRST ORDER OF WORK TEMPORARY BYPASS STRUCTURE-EAST TIE IN
E-18	DETAILS NEW RTU #8 STATION BLOCK DIAGRAM TEMPORARY BYPASS STRUCTURE-EAST TIE IN
E-19	DETAILS TYPICAL RTU GROUP CIRCUIT DIAGRAM TEMPORARY BYPASS STRUCTURE-EAST TIE IN
E-20	DETAILS TYPICAL CALL BOX SYSTEM TEMPORARY BYPASS STRUCTURE-EAST TIE IN
E-21	DETAILS RTU #8 ELEMENTARY CONNECTION DIAGRAM TEMPORARY BYPASS STRUCTURE-EAST TIE IN
E-22	DETAILS TYPICAL RELAY WIRING DIAGRAM TEMPORARY BYPASS STRUCTURE-EAST TIE IN
E-23	DETAILS RTU #8 STATION TERMINAL CABINETS TEMPORARY BYPASS STRUCTURE-EAST TIE IN
E-24	DETAILS CABLE TRAY MOUNTING TEMPORARY BYPASS STRUCTURE-EAST TIE IN
E-25	DETAILS TEMPORARY LIGHTING TEMPORARY BYPASS STRUCTURE-EAST TIE IN
E-26	DETAILS TYPICAL CONDUIT/CABLE SUPPORTS TEMPORARY BYPASS STRUCTURE-EAST TIE IN
E-27	DETAILS NEW RTU #8 STATION ON PIER E1 TEMPORARY BYPASS STRUCTURE-EAST TIE IN

ABBREVIATIONS

NOT LISTED IN CALTRANS STANDARD PLANS ES-1A AND ES-1B

cb	Existing Coil Box
CB	Coil Box
CEC	California Electrical Code
COM	Communication
Cont'd	Continued
DC	Direct Current
EB	Eastbound
(E), Exist	Existing
FSC	Fiber Splice Closure
FTC	Fiber Optic Trunkline Cable
G, GND, Gnd	Ground (ground cable)
GRS	Galvanized Rigid Steel
JB	Junction Box
Kcmil	Kilo Circular Mil
kV	kilovolt
LTFC	Liquid Tight Flexible Metal Conduit
LVCC	Low Voltage Control Center
LD	Lower Deck
LTS, lts	Light
MFR	Manufacturer
MH	Existing Manhole
N.E.C.	National Electrical Code
PEU	Photo-Electric Unit
PR	Pair
PWR	Power
RTU	Remote Terminal Unit
SCADA, Scada	Supervisory Control and Data Acquisition
SC	Supervisory Control
SG	System Ground
SFOBB	San Francisco Oakland Bay Bridge
SHLD, Shld	Shield
Term	Terminal
TOS	Traffic Operating System
UD	Upper Deck
V	Volt
W	Wire
WB	Westbound
YBI	Yerba Buena Island

SYMBOLS

NOT LISTED IN CALTRANS STANDARD PLANS ES-1A, ES-2B AND ES-1C

- ⟨1⟩ Sheet Notes, applicable only to the Drawing 1=Sequential number
- Junction Box, Conduit Fitting
- Existing Coil Box
- New Coil Box

Caltrans Metric

DIST	COUNTY	ROUTE	KILOMETER POST TOTAL PROJECT	SHEET NO	TOTAL SHEETS
04	SF	80			

Carol Light 04/15/08
REGISTERED ELECTRICAL ENGINEER DATE

PLANS APPROVAL DATE

CAROL LIGHT No. 10145 Exp. 08/30/08 ELECTRICAL

PB Americas, Inc.
303 Second St., Suite 700N
San Francisco, CA 94107-1307

SILVERMAN & LIGHT
1201 PARK AVENUE - SUITE 100
EMERYVILLE, CA 94608-3632

The State of California or its officers or agents shall not be responsible for the accuracy or completeness of electronic copies of this plan sheet.

Caltrans now has a web site! To get to the web site, go to http://www.dot.ca.gov

CONTRACT NO. 04-0120R4

CONTRACT CHANGE ORDER NO 134

SHEET 68 OF 94

MARK	DATE	DESCRIPTIONS	BY	CHK	DCCOM
		REVISIONS			

CONTRACT CHANGE ORDER NO. ....
SHEET ... OF ....

- Conduit turned up
- Conduit turned down
- Conduit or Cable run, exposed
- Conduit run concealed in concrete barrier, slab or routed underground duct bank
- Contact normally open when de-energized.
- Contact normally close, when de-energized.
- (K) Relay coil, letter indicates the purpose

LIGHTING POLE IDENTIFICATION

243 - 1
- 243 — Roadway Ltg Pole
- 1 — Assigned sequential lighting pole number
- Assigned circuit number

PERMANENT AND TEMPORARY WEST AND EAST SPAN CABLES

243 - 1A
- 243 — Permanent cable location 1- Westbound 2- Eastbound 1- Temporary
- A — Circuit number

ELECTRICAL SHEET INDEX, SYMBOLS, AND ABBREVIATIONS
TEMPORARY BYPASS STRUCTURE-EAST TIE IN

NO SCALE

E-1

STATE OF CALIFORNIA - DEPARTMENT OF TRANSPORTATION
Caltrans
DESIGN OVERSIGHT
HONG WONG
CALCULATED/DESIGNED BY
CHECKED BY CL
DRAWN BY BJ
DATE REVISED

THIS PLAN ACCURATE FOR ELECTRICAL WORK ONLY

FOR REDUCED PLANS ORIGINAL SCALE IS IN MILLIMETERS 0 20 40 60 80

DGN FILE ...\e120r4s103\southtieeastpsse e1-1\transmittal\eco submittal 700809021roadway\e120r4s101.dgn
USER NAME = reyes1

CU 04251 EA 0120R4

DATE PLOTTED = 5/7/2008
DATE REVISED = 5/6/2008

GENERAL NOTES

1. All electrical work shall conform to (1998 and 2004) the latest issue of State of California Department of Transportation Standard Specifications and Standard Plans. These general notes and the special provisions under this contract also apply. For any conflict of provisions, State Guidelines apply.
2. All conduit routing is shown diagrammatically. Pull box locations are located and shown on plan drawings. The Contractor shall provide additional pull boxes as required. Exact location of equipment and devices may be adjusted by field conditions or as directed by the Engineer.
3. Minimum conduit sizes shall be 21 mm. All conduits located outside shall be rigid galvanized steel, PVC coated.
4. All conduit fittings for 78 mm and above shall have a 610 mm minimum bending radius.
5. All equipment and devices shall be provided with nameplate tags as shown in the drawings.
6. All feeders and branch circuits shall be provided with an equipment ground wire.
7. 15 KV splice boxes shall be installed as shown and permanently marked "DANGER-HIGH VOLTAGE-KEEP OUT". The letters shall be block type and at least 50 mm in height.
8. The Contractor shall label all conductors and cables per cable schedules.
9. Cell boxes will be State-furnished.
10. The Contractor shall provide all conduits with permanent field markers and labels.
11. The Contractor shall verify existing installation prior to intercepting and splicing with the new armored cable to ensure continuity of electrical service to West span.
12. The Contractor shall provide and install new armored cables on metal racks, troughs, in cable trays or secured to supports spaced not greater than 1.5 meters apart.
13. The Contractor shall provide splice boxes for armored cables.
14. For other related work not shown on the plan sheets, see Electrical Special Provisions.
15. Contractor to verify all controlling field dimensions before ordering or fabricating any material.
16. Provide and install new armored cables or conduit as shown, scheduled and as needed in construction. Support cables or conduit from surface and as needed in construction. Support cables or conduit from surface mounted using 41x41 channel, hot dipped galvanized and appropriate strut mounted clamps. See Detail. Support armored cables or conduit horizontally along Temporary Bypass Structure (TBS) using steel ladder cable trays, hot dipped galvanized steel after fabrication (Cooper B-Line Series 14BG12-24-144 or equal). See Details for cable tray sizing, support, etc.
17. Verify cables no longer used or already abandoned by Caltrans. These cables will not be intercepted or spliced and are to be abandoned in place. After completion of work the Contractor is to remove cables, pullboxes, junction boxes, terminal boxes and cabinets inside Vaults #2, #3, #5 and connecting utility tunnels, including cables abandoned by others.
18. New armored cable will be completely routed and tested before cutting existing circuits and/ or interconnecting new.
19. Conduit stub-ups (Eight-103C) have been installed by others at Vault #2A for utilization in this project.
20. Existing temporary power/ signal cables installed on Southgate Road wall and by YBI Substation project are to be removed after cutover (Reference and by YBI Substation project are to be removed after cutover (Reference SFOBB Electrical Design RFI response, Letter 05.03.01-00453, June 6, 2005 from Caltrans).
21. Contractor to provide expansion fittings or loops at bridge expansion joints or points of deflection. Provide stainless steel support grips to hold the weight of electrical cable as it loops or hang in vertical, sloping or horizontal position.
22. 15kV splicing shall be done by a certified High Voltage Splicer. The contractor shall allow 5 working days to approve splicer by Engineer.
23. If there are cables or conduit not shown on the plans, the contractor shall verify the use of these equipment. If this equipment has to be maintained, the contractor shall relocate the equipment and maintain as directed by Engineer.
24. All conduits and cables shall be connected to junction boxes using threaded insulated bonding bushing (pressure type lug) with gasketed sealing locknut and moisture proof hub with "O" ring.
25. All new conduits and cables shall be secured at a maximum 1.5 meters interval.
26. Exact location of equipment maybe adjusted to field conditions by the Engineer.

SEQUENCE OF CONSTRUCTION

STAGE 1: (Reference : Sheets E-15 and E-17)

1. Install new Service Cabinet, Contactor/Relay Cabinet, Control Cable Terminal Box and PEU unit on new RTU #8 Station at existing Pier E1.
2. Disconnect and remove existing RTU #8 cabinet and reinstall to new RTU #8 Station at existing Pier E1.
3. Locate and intercept existing DC cable (40/c, #16) and existing RTU cable (50pr, #19) and reroute cables to new Control Cable Terminal Box and RTU #8 cabinet respectively at new RTU #8 Station at existing Pier E1.
4. Locate and intercept existing conduit/cables (for call boxes #141, 142, 241, 242, 341, 342, 441 and 442) and reroute to relocated RTU #8 cabinet on new RTU #8 Station at existing Pier E1.
5. Remove and relocate existing call boxes from existing structure to be demolished, keeping 9-pin straight plug (male and female) connection intact with one meter length of cable pigtail for splicing at new location on Temporary Bypass Structure. (Installation and reconnection of these call boxes will be by "TRC")
6. Locate and intercept existing 480 volt call box main feeder (3 #2, & 1 #6G) cable and reroute to new Service Cabinet on new RTU #8 Station of existing Pier E1 and connect.

STAGE 2: (Reference: Sheet E-18)

1. Terminate and connect all new associated cables from Temporary Bypass Structure to new Cabinets and box at Pier E1 (including new service cabinet, relocated RTU #8 cabinet and new contactor/ relay terminal box).
2. Demo existing service cabinet, contactor/relay cabinet and control terminal box including related cables of existing location.

CONTRACT NO. 04-0120R4

CONTRACT CHANGE ORDER NO 134

SHEET 69 OF 94

PROJECT NOTES

1. Existing 78c, 3 #8, 8-6 #16 conductor cable under upper deck beam.
2. Existing 53c, 3 #8, 4-6 #16 conductor cable.
3. Existing 53c, 50 twisted pair #19 conductor shielded cable.
4. nstall new 3 #6+G armored cable (ckt #244)
5. nstall new 3 #6+G armored cable (ckt #243).
6. Install new armored cable with 3 #2 & 1 #8G (480 V, Call Box Main Feeder)
7. Install new 41C with 5 #8 and 1 #12G.
8. Install new 21C, with 3 #14 (120 V, PEU).
9. 3 #12 AWG conductors from splice boxes to lighting fixtures.
10. Secure conduit with unistrut assembly to structure, and per CEC.
11. Locate conduit adjacent to new cable tray.
12. Install 40C, #16 AWG conductor cable..
13. install new armored cable with 50 pair, #18 conductors.
14. Install new 53C, liquid tight flexible conduit with 3 #8, 4- 6 #16 conductor cable.
15. Install new 41C, 5 #8 and 2 #14 AWG.
16. Existing 40c, #16 AWG conductor cable.
17. Existing 50pr, #18 AWG conductor cable.

MARK	DATE	DESCRIPTIONS REVISIONS	BY	CH'K	DESIGN

CONTRACT CHANGE ORDER NO. .....
SHEET ..... OF .....

PROJECT NOTES
TEMPORARY BYPASS STRUCTURE-EAST TIE IN

NO SCALE

E-2

DIST	COUNTY	ROUTE	KILOMETER POST TOTAL PROJECT	SHEET NO.	TOTAL SHEETS
04	SF	80			

Carol Light 04/15/08
REGISTERED ELECTRICAL ENGINEER — DATE

CAROL LIGHT No. 10145 Exp. 09/30/08 ELECTRICAL — REGISTERED PROFESSIONAL ENGINEER — STATE OF CALIFORNIA

PLANS APPROVAL DATE

PB Americas, Inc.
303 Second St., Suite 700N
San Francisco, CA 94107-1317

SILVERMAN & LIGHT
1210 PARK AVENUE - SUITE 100
EMERYVILLE, CA 94608-3632

The State of California or its officers or agents shall not be responsible for the accuracy or completeness of electronic copies of this plan sheet.

Caltrans now has a web site! To get to its web site, go to http://www.dot.ca.gov

CALCULATED/ DESIGNED BY: RJ | DATE | REVISED BY | DATE REVISED
CHECKED BY: CL

DESIGN OVERSIGHT: HONG KONG

STATE OF CALIFORNIA - DEPARTMENT OF TRANSPORTATION
Caltrans

THIS PLAN ACCURATE FOR ELECTRICAL WORK ONLY

FOR REDUCED PLANS ORIGINAL SCALE IS IN MILLIMETERS

DGN FILE = s:\c13\d3\southgate\tour\cco e12-1\trans-it\cco sub#1e4 20080507\roadway\4120r4e402.dgn
USERNAME = reyes

CU 04251 EA 0120R4

DATE PLOTTED => 5/22/2008
TIME PLOTTED => 14:20:58

REVISIONS

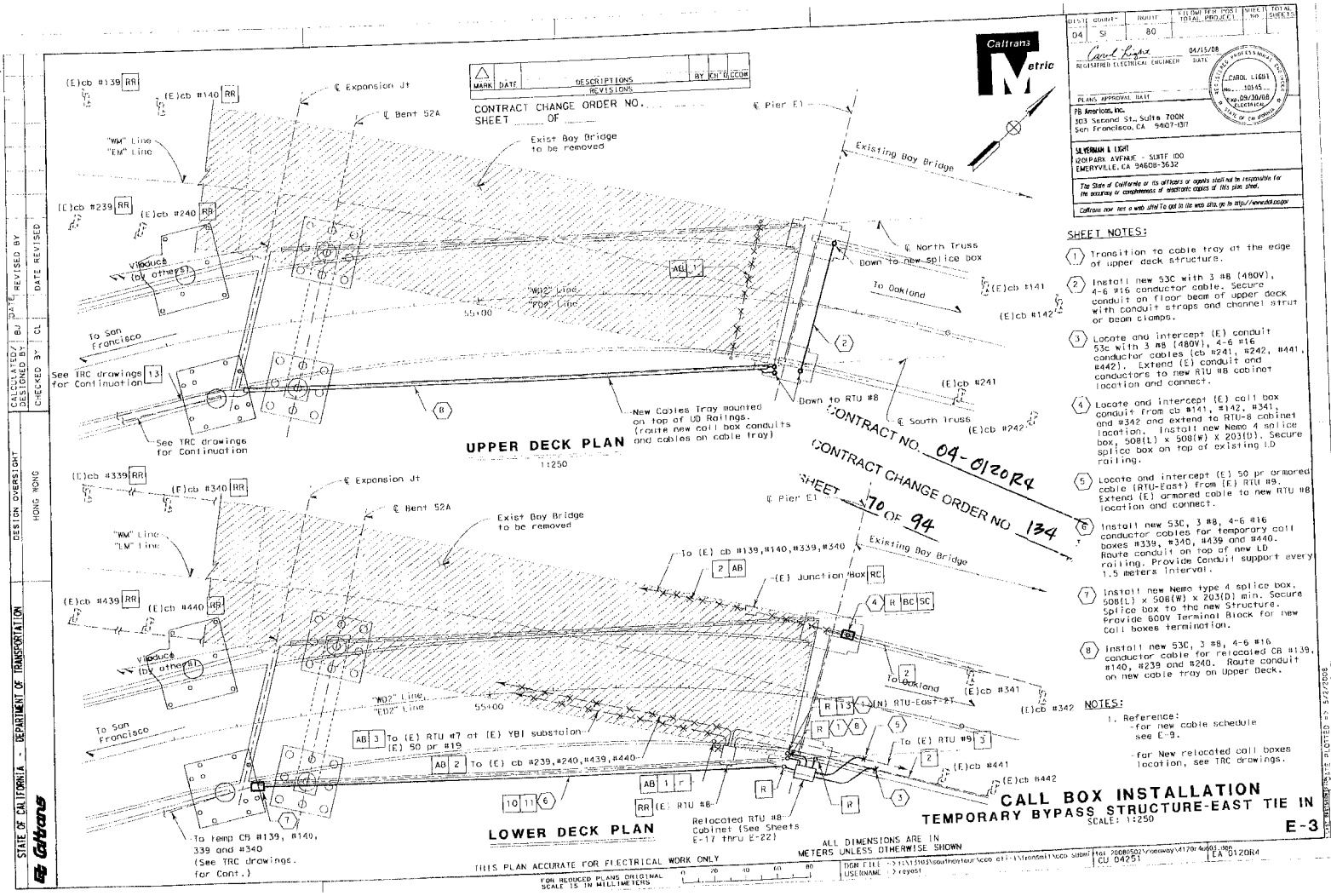

CONTRACT CHANGE ORDER NO. 04-0120R4
SHEET 70 OF 94
CONTRACT CHANGE ORDER NO. 134

SHEET NOTES:

1. Transition to cable tray at the edge of upper deck structure.
2. Install new 53C with 3 #8 (480V), 4-6 #16 conductor cable. Secure conduit on floor beam of upper deck with conduit straps and channel strut or beam clamps.
3. Locate and intercept (E) conduit 53c with 3 #8 (480V), 4-6 #16 conductor cables (cb #241, #242, #441, #442). Extend (E) conduit and conductors to new RTU #8 cabinet location and connect.
4. Locate and intercept (E) call box conduit from cb #141, #142, #341, and #342 and extend to RTU-8 cabinet location. Install new Nemo 4 splice box, 508(L) x 508(W) X 203(D). Secure splice box on top of existing LD railing.
5. Locate and intercept (E) 50 pr armored cable (RTU-East) from (E) RTU #9. Extend (E) armored cable to new RTU #8 location and connect.
6. Install new 53C, 3 #8, 4-6 #16 conductor cables for temporary call boxes #339, #340, #439 and #440. Route conduit on top of new LD railing. Provide Conduit support every 1.5 meters interval.
7. Install new Nemo type 4 splice box, 508(L) x 508(W) x 203(D) min. Secure Splice box to the new Structure. Provide 600V Terminal Block for new Call boxes termination.
8. Install new 53C, 3 #8, 4-6 #16 conductor cable for relocated CB #139, #140, #239 and #240. Route conduit on new cable tray on Upper Deck.

NOTES:

1. Reference:
   -for new cable schedule see E-9.
   -for New relocated call boxes location, see TRC drawings.

CALL BOX INSTALLATION
TEMPORARY BYPASS STRUCTURE-EAST TIE IN

SCALE: 1:250

E-3

DIST	COUNTY	ROUTE	TOTAL PROJECT	SHEET No.	TOTAL SHEETS
04	SF	80			

Carol Light 04/15/08
REGISTERED ELECTRICAL ENGINEER DATE

CAROL LIGHT No. 10145 Exp. 09/30/08 ELECTRICAL

PLANS APPROVAL DATE

PB Americas, Inc.
303 Second St., Suite 700N
San Francisco, CA 94107-1317

SILVERMAN & LIGHT
2040 PARK AVENUE - SUITE 100
EMERYVILLE, CA 94608-3632

The State of California or its officers or agents shall not be responsible for the accuracy or completeness of electronic copies of this plan sheet.

Caltrans now has a web site! To get to the web site, go to http://www.dot.ca.gov

MARK	DATE	DESCRIPTIONS REVISIONS	BY	CHK'D

CONTRACT CHANGE ORDER NO. .....
SHEET ..... OF .....

Caltrans Metric

DESIGNED BY	CHECKED BY	DRAWN BY	CALCULATED/ DESIGNED BY	DATE REVISED	REVISED BY	DATE
HONG NONG	SY	CL	BJ			

DESIGN OVERSIGHT

STATE OF CALIFORNIA - DEPARTMENT OF TRANSPORTATION
Caltrans

THIS PLAN ACCURATE FOR ELECTRICAL WORK ONLY

ALL DIMENSIONS ARE IN METERS UNLESS OTHERWISE SHOWN

FOR REDUCED PLANS ORIGINAL SCALE IS IN MILLIMETERS

0 20 40 60 80

DGN FILE -> I:\s11\s1103\southmaintour\cco e1r-1\transmit\cco e1r-1.dgn
USERNAME -> reyes1

Proj. 2008050210 Roadway\4120r4\403_000

CU 04251 EA 0120R4

DATE PLOTTED => 5/12/2008
TIME PLOTTED => 12:53:31

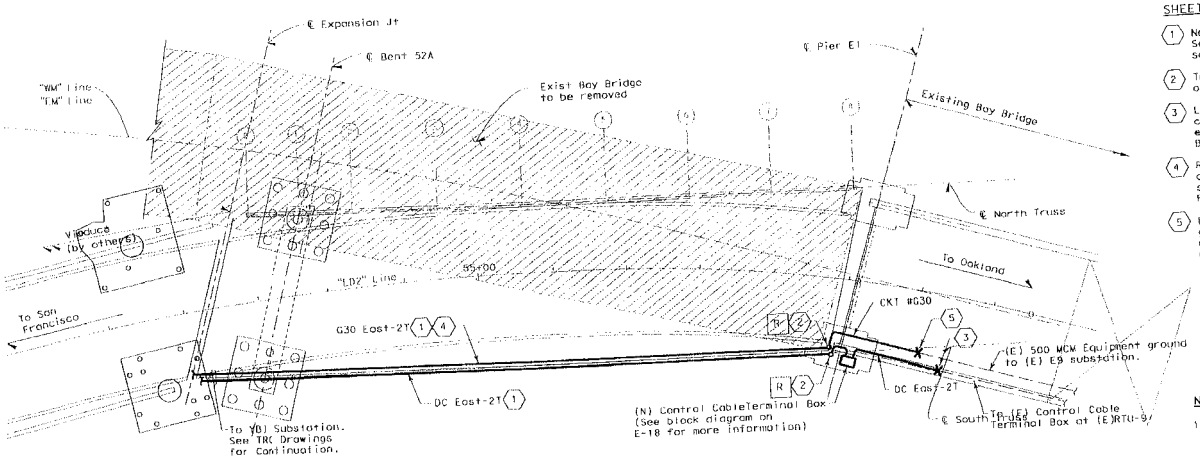

LOWER DECK

CONTRACT NO. 04-0120R4

CONTRACT CHANGE ORDER NO. 134

SHEET 71 OF 94

DIST	COUNTY	ROUTE	KILOMETER POST TOTAL PROJECT	SHEET NO.	TOTAL SHEETS
04	SF	80			

Carol Light — REGISTERED ELECTRICAL ENGINEER — DATE 04/15/08

PLANS APPROVAL DATE

CAROL LIGHT — No. 10145 — Exp. 09/30/08 — ELECTRICAL — REGISTERED PROFESSIONAL ENGINEER — STATE OF CALIFORNIA

PB Americas, Inc.
303 Second St., Suite 700N
San Francisco, CA 94107-1317

SILVERMAN & LIGHT
1201 PARK AVENUE - SUITE 100
EMERYVILLE, CA 94608-3632

The State of California or its officers or agents shall not be responsible for the accuracy or completeness of electronic copies of this plan sheet.

California now has a web site! To see the web site, go to http://www.dot.ca.gov

SHEET NOTES:

1. New Armored cables on cable tray. See Sheet E-9 for new armored cable schedule.
2. Transition to cable tray at the edge of upper deck structure.
3. Locate and intercept existing armored cable with 40/c, #16 conductor and extend to new Control Cable Terminal Box located in new RTU-8 Station.
4. Route CKT #G30 together with new cables routed from Vault #2A and splice with existing ckt #G30 near Pier E1.
5. Locate existing 500 MCM equipment ground and splice (Exothermic connection) to new 500 MCM insulated equipment ground from YBJ substation.

NOTES:

1. Contractor shall verify existing installation prior to intercepting and splicing the new armored cables to ensure continuity of the electrical service.
2. Contractor shall provide and install new armored cables and secure them tog supports no greater than 1.5 meters apart.

MARK	DATE	DESCRIPTIONS	BY	CH'D	CCO#
		REVISIONS			

CONTRACT CHANGE ORDER NO. .....
SHEET ... OF .....

CABLE REROUTE INSTALLATION
TEMPORARY BYPASS STRUCTURE-EAST TIE IN

SCALE: 1:250

E-4

STATE OF CALIFORNIA - DEPARTMENT OF TRANSPORTATION — Caltrans

DESIGN OVERSIGHT — HONG WONG

CALCULATED/DESIGNED BY — CHECKED BY — DRAWN BY — DATE REVISED BY — DATE REVISED

THIS PLAN ACCURATE FOR ELECTRICAL WORK ONLY

ALL DIMENSIONS ARE IN METERS UNLESS OTHERWISE SHOWN

FOR REDUCED PLANS ORIGINAL SCALE IS IN MILLIMETERS (0 20 40 60 80)

DGN FILE = s:\civil\3103\southtie\ecco e11-13\crossall\ecco sub01.dgn | plot 20080502\roadway\4120r4[dot].pdf

USERNAME = rroyset

CU 04251 | EA 0120R4

100-00-00 DATE PLOTTED => 5/2/2008 TIME PLOTTED => 14:12:58 BY

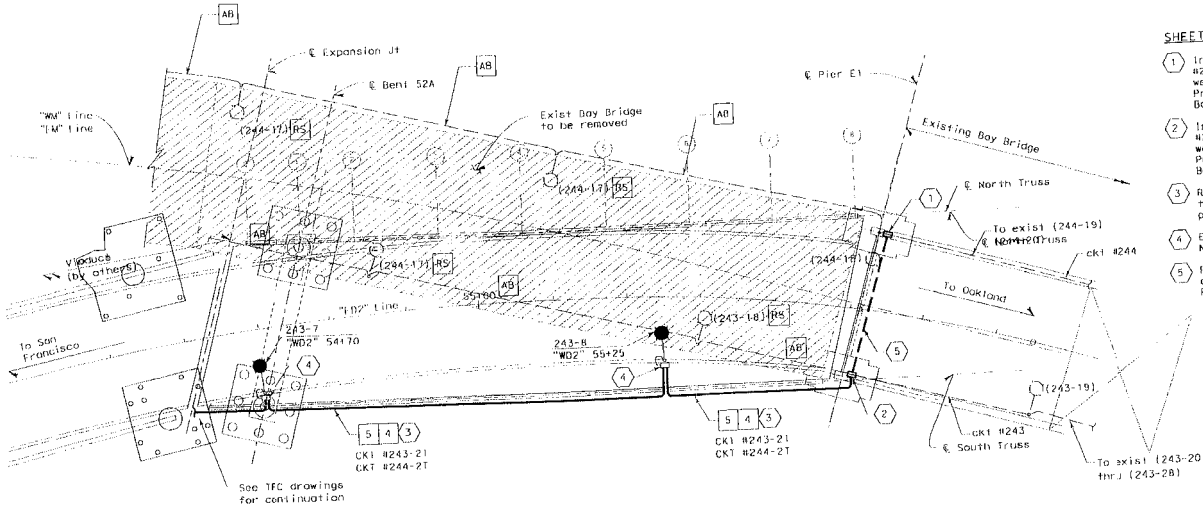

UPPER DECK

CONTRACT NO. 04-0120R4

CONTRACT CHANGE ORDER NO. 134

SHEET 72 OF 94

MARK	DATE	DESCRIPTIONS REVISIONS	BY CF'D CCDR

CONTRACT CHANGE ORDER NO. .....

SHEET ..... OF .....

SHEET NOTES:

1. Intercept and reconnect to existing #244 to maintain power to existing westbound electroliers (North side). Provide and install Nema 4X Splice Box as required.
2. Intercept and reconnect to existing #243 to maintain power to existing westbound electroliers (South side). Provide and install Nema 4 Splice Box as required.
3. Route armored cable (480 V) on cable tray and provide cable support per N.E.C.
4. Extend CKT #243 armored cable to Nema 4X splice box and connect.
5. Route new 4IC with 3 #6 +8G below existing upper deck structure. Provide conduit support per CEC.

NOTES:

1. Reference:
   -for new cable schedule, see E-9.

WESTBOUND LIGHTING
TEMPORARY BYPASS STRUCTURE-EAST TIE IN

SCALE: 1:250

E-5

DIST	COUNTY	ROUTE	KILOMETER POST TOTAL PROJECT	SHEET NO	TOTAL SHEETS
04	SF	80			

Carol Light 04/15/08
REGISTERED ELECTRICAL ENGINEER DATE

CAROL LIGHT No. 10145 Exp. 09/30/08 ELECTRICAL

PLANS APPROVAL DATE

PB Americas, Inc.
303 Second St., Suite 700N
San Francisco, CA 94107-1317

SILVERMAN & LIGHT
1201 PARK AVENUE - SUITE 100
EMERYVILLE, CA 94608-3632

The State of California or its officers or agents shall not be responsible for the accuracy or completeness of electronic copies of this plan sheet.

Caltrans now has a web site! To get to the web site, go to http://www.dot.ca.gov

STATE OF CALIFORNIA - DEPARTMENT OF TRANSPORTATION
Caltrans
DESIGN OVERSIGHT
HONG WONG
CALCULATED/ DESIGNED BY
CHECKED BY
DATE REVISED BY
DATE REVISED

THIS PLAN ACCURATE FOR ELECTRICAL WORK ONLY

ALL DIMENSIONS ARE IN METERS UNLESS OTHERWISE SHOWN

FOR REDUCED PLANS ORIGINAL SCALE IS IN MILLIMETERS

0 20 40 60 80

DGN FILE e:\tes\1103\southerntour\tco etf-1\rndesktt\tco subst
USERNAME = reyesl

fig1 20080502\roadway\e1120r4e05.dgn
CU 04251 EA 0120R4

DATE PLOTTED => 5/7/2008
TIME PLOTTED => 12:12:28 PM

DIST	COUNTY	ROUTE	KILOMETER POST TOTAL PROJECT	SHEET NO	TOTAL SHEETS
04	SF	80			

Carol Lipke 04/15/08
REGISTERED ELECTRICAL ENGINEER DATE

PLANS APPROVAL DATE

REGISTERED PROFESSIONAL ENGINEER CAROL LIPKE 18145 ELECTRICAL STATE OF CALIFORNIA

TB Engineers, Inc.
303 Second St., Suite 700N
San Francisco, CA 94107-1317

SUTTERMAN & SON
1600 PARK AVENUE - SUITE 100
EMERYVILLE, CA 94608-3632

The State of California or its officers or agents shall not be responsible for the accuracy or completeness of electronic copies of this plan sheet.

Contract now has a web sheet to get to the web site, go to http://www.dot.ca.gov

NOTES:

1. Contractor shall verify existing installation prior to intercepting and splicing the new armored cables to ensure continuity of the electrical service.
2. Contractor shall provide and install new armored cables and secure them with log supports no greater than 1.5 meters apart.
3. For New Soffit Lighting Fixture Location and Details, see Sheet E-7.
4. Contractor to Provide expansion fittings or loops at bridge expansion joints or points of deflections.

SHEET NOTES:

1. Electrical Contractor to intercept and reconnect existing circuits (ckt 241, 242) to maintain power to existing soffit (flourescent) light fixtures From Pier E1 to Pier E2. Provide and install Nema 4X Junction Box as needed.
2. Terminate and connect new armored cables in splice box (CKT's #241-2T and #242-2T)
3. Splice CKTs #241-2T and #242-2T conductors from Temporary Bypass Structure. See TRC drawings for more information.
4. Install new armored cable with 3 #6 & 1 #8G. Secure cable on the existing structure with cable clamps and channel strut.

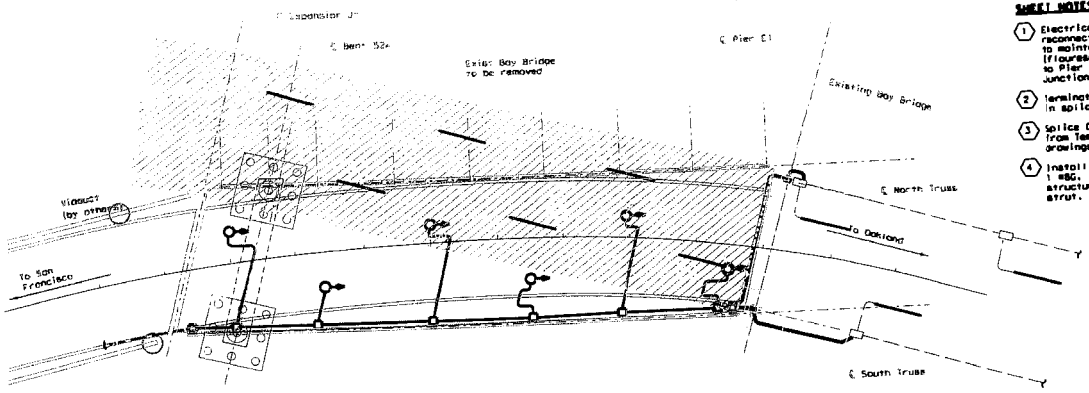

LOWER DECK

CONTRACT NO. 04-0120R4

CONTRACT CHANGE ORDER NO 134

SHEET 73 OF 94

EASTBOUND LIGHTING
TEMPORARY BYPASS STRUCTURE-EAST TIE IN

SCALE: 1:250

E-6R1

ALL DIMENSIONS ARE IN METERS UNLESS OTHERWISE SHOWN

THIS PLAN ACCURATE FOR ELECTRICAL WORK ONLY

FOR REDUCED PLANS ORIGINAL SCALE IS IN MILLIMETERS 0 20 40 60 80

DGN FILE => $REQUEST
USERNAME => $USER

CU 04251

EA 0120R4

DATE PLOTTED => $DATE
TIME PLOTTED => $TIME
00-00-00

DESIGN OVERSIGHT: HONG WONG

CALCULATED/DESIGNED BY: BJ DATE
CHECKED BY: CL DATE REVISED

REVISED BY

C:\ETIWT\4120R4ua06R1.dgn 11/25/2008 09:50:21 AM

DIST	COUNTY	ROUTE	KILOMETER POST TOTAL PROJECT	SHEET NO	TOTAL SHEETS
64	SF	80			

Carl Lipe
REGISTERED ELECTRICAL ENGINEER
04/15/08
DATE

REGISTERED PROFESSIONAL ENGINEER
CARL LIPE
10/05
ELECTRICAL
STATE OF CALIFORNIA

PLANS APPROVAL DATE

TO Inspiration, Inc.
303 Second St., Suite 700N
San Francisco, CA 94107-1317

Sverdrup & Bjork
1001 PARK AVENUE - SUITE 100
EMERYVILLE, CA 94608-3632

The State of California or its officers or agents shall not be responsible for the accuracy or completeness of electronic copies of this plan sheet.

Caltrans now has a web site! To get to the web site, go to http://www.dot.ca.gov

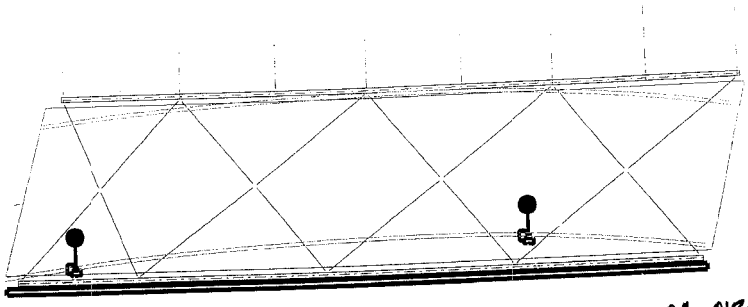

WESTBOUND STRUCTURE (UPPER DECK)

CONTRACT NO. 04-0120R4

CONTRACT CHANGE ORDER NO 134

SHEET 74 OF 94

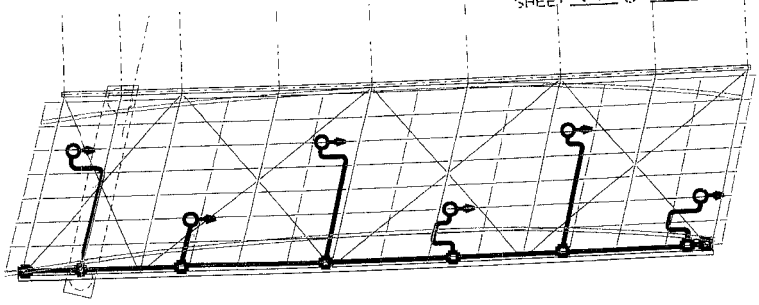

EASTBOUND STRUCTURE (LOWER DECK)

SHEET NOTES:

1. Install new Type 21 light fixture mounted on barrier rails with 400 watts HPS luminaire on 3.7 Meter mounting arm. See Caltrans Standard Plan ES-6A for more detail.
2. Install new Nema Type 4X splice box on the outside face of barrier. Splice box shall have a minimum dimension of 305(L) x 305(W) x 152(D). Secure box on the concrete barrier with four (4) 10-24 concrete expansion anchors and hex head cap screws. Provide fused splice connectors. See Caltrans Standard E-13A and 13-B for splicing details and fuse ratings.
3. Install new surface mounted Type III Soffit Light fixture with 150 watts HPS. Secure fixture to steel structure of west bound deck. Locate fixture 4.0 meter off inside face of barrier.
4. Install new Nema Type 4X splice box with minimum dimensions of 305(L) x 305(W) x 152(D). Fasten box on the first longitudinal steel member inside south truss. Provide fused splice connectors. See Caltrans Standard E-13A and 13-B for splicing details and fuse ratings.
5. Install new Nema Type 4X splice box with minimum dimensions of 305(L) x 305(W) x 152(D). Fasten box on the steel structure. Provide enough cable length and coil cable in box for reconnection, to power existing East bound luminaires to remain.
6. Install new Nema Type 4X splice box with minimum dimensions of 305(L) x 305(W) x 152(D). Fasten box on the steel structure. Provide enough cable length and coil cable inside box for connection to new East bound soffit fixtures. See TRC dwgs. for more information.
7. Install new 41C, with 6 #6 & 1 #8G (CKTs #241 and #242). Secure conduit to Steel Structure. See Detail on Sheet E-25.
8. Install new 27C, LTFC with 3 #12 & 1 #12G from splice box to Lighting Fixture.

EAST TIE-IN STRUCTURE-LIGHTING
TEMPORARY BYPASS STRUCTURE-EAST TIE IN

SCALE: 1:200

E-7R1

ALL DIMENSIONS ARE IN METERS UNLESS OTHERWISE SHOWN

THIS PLAN ACCURATE FOR ELECTRICAL WORK ONLY

FOR REDUCED PLANS ORIGINAL SCALE IS IN MILLIMETERS

0 20 40 60 80

DGN FILE => WREQUEST
USERNAME => MUSER

CU 04251

EA 0120R4

DATE PLOTTED => WDATE
TIME PLOTTED => WTIME
00-00-00

CALCULATED/DESIGNED BY	BJ	DATE	REVISED BY
CHECKED BY	CL	DATE REVISED	

DESIGN OVERSIGHT: HONG WONG

C:\ETIWTI\4120R4ua07R1.dgn 11/25/2008 09:51:27 AM

DIST	COUNTY	ROUTE	KILOMETER POST / FINAL PROJECT	SHEET NO	TOTAL SHEETS
04	SF	80			

Caltrans Metric

Carol Light 04/15/08
REGISTERED ELECTRICAL ENGINEER DATE

CAROL LIGHT No. 10145 Exp. 06/30/08 ELECTRICAL — REGISTERED PROFESSIONAL ENGINEER — STATE OF CALIFORNIA

PLANS APPROVAL DATE

PB Americas, Inc.
303 Second St., Suite 100N
San Francisco, CA 94107-1317

SILVERMAN & LIGHT
1201 PARK AVENUE - SUITE 100
EMERYVILLE, CA 94608-3632

The State of California or its officers or agents shall not be responsible for the accuracy or completeness of electronic copies of this plan sheet.

Caltrans now has a web site! To go to the web site, go to http://www.dot.ca.gov

NOTES:

1. Contractor shall verify existing installation prior to intercepting and splicing the new armored cables to ensure continuity of the electrical service.
2. Contractor to Provide expansion fittings or loops at bridge expansion joints or points of deflections.
3. For new armored cable schedule, see Sheet E-9.
4. For 15 KV block Diagram, see Sheet E-12.

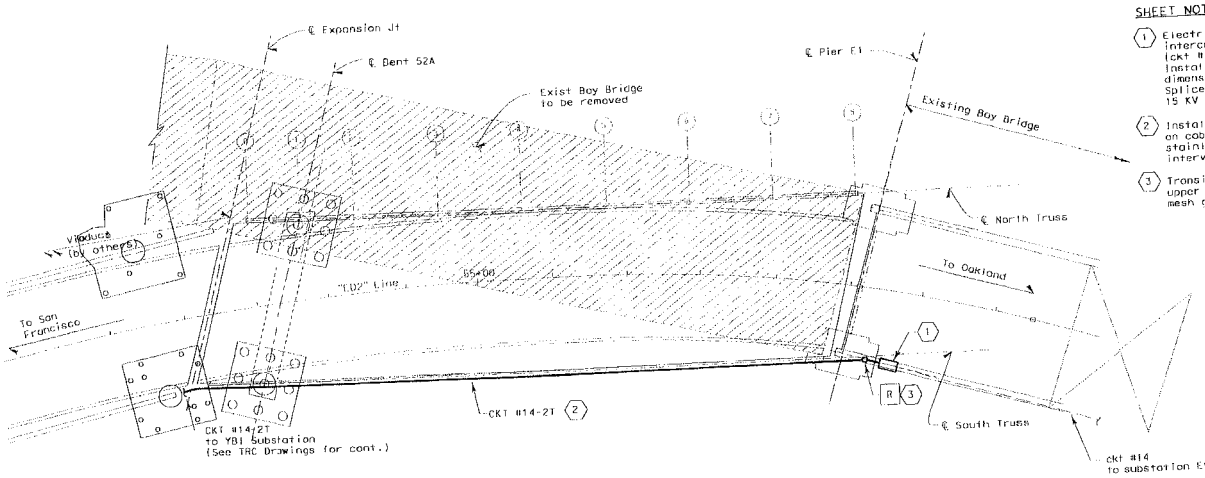

SHEET NOTES:

1. Electrical Contractor to locate and intercept existing 15 kv armored cable (ckt # 14) at station "ED2" 56+15. Install Nema 4X Splice box with minimum dimension 457(W) x 610(D) x 1000(L) Splice new to existing conductors with 15 KV Splice Kit.
2. Install and route new 15 kV armored cable on cable tray. Secure cable with stainless cable clamps every 1.5 meters interval.
3. Transition to cable tray at the side of upper deck structure. Provide stainless mesh grip to support cable.

CONTRACT NO. 04-0120R4

CONTRACT CHANGE ORDER NO 134

SHEET 75 OF 94

MARK	DATE	DESCRIPTIONS	BY	ON DISTRICT
		REVISIONS		

CONTRACT CHANGE ORDER NO. ____
SHEET ____ OF ____

TEMPORARY 12.47 kV POWER SYSTEM
TEMPORARY BYPASS STRUCTURE-EAST TIE IN

SCALE: 1:250

E-8

STATE OF CALIFORNIA - DEPARTMENT OF TRANSPORTATION
Caltrans
DESIGN OVERSIGHT: HONG WONG
CALCULATED/DESIGNED BY: BU DATE
CHECKED BY: CL
DATE REVISED
REVISED BY

ALL DIMENSIONS ARE IN METERS UNLESS OTHERWISE SHOWN

THIS PLAN ACCURATE FOR ELECTRICAL WORK ONLY

FOR REDUCED PLANS ORIGINAL SCALE IS IN MILLIMETERS 0 20 40 60 80

DGN FILE = D:\TMP\TMP03\southbaytour\cco e1-1\transmit\cco sub#1 tmp 20080602\voddaoy\e120r-su08.dgn
USERNAME = reyes1

CU 04251 EA 0120R4

DATE PLOTTED = 5/27/2008
TIME PLOTTED = 15:27:38 PM

NEW ARMORED CABLE SCHEDULE (1)

CIRCUIT NO. (EXISTING) * 3	DESCRIPTION	NEW CABLE SIZE	NEW CABLE TYPE	EXISTING CABLE SIZE	REMARKS	FROM	TO
CKT #14-2T	12.47 kV bridge power cable to Pier E-9 substation	3/C #4/0 + #3G	Armored 15 kV	3-1/C #2/0		(E) splice box in (E) MH-1	(N) Splice Box at "EQ2" 56+15
RTU East-2T	RTU/Telephone communication cable	50-pr #18	Armored 600 V	50-pr #18		(E) TB-30 in (E) MH-3	Relocated RTU #8 at (E) Pier E1
DC East-2T	DC cable	40/C #16	Armored 600 V	40/C #16		(E) TB-30 in (E) MH-3	(N) Conrol Cable Term Box at (E) Pier E1
CKT #241-2T	480V power to Eastbound LD South-East temporary lighting	3/C #6 + G	Armored 600 V	3/C #6 + G	(2)	(E) TB-20E in (E) MH-2	(E) Light fixtures to remain near Pier E1.
CKT #242-2T	480V power to Eastbound LD North-East temporary lighting	3/C #6 + G	Armored 600 V	3/C #6 + G	(2)	(E) TB-20E in (E) MH-2	(E) Light fixtures to remain near Pier E1.
CKT #243-2T	480V power to Westbound UD South-West temporary lighting	3/C #6 + G	Armored 600 V	3/C #6 + G	(2)	(E) TB-20E in (E) MH-2	(E) Light fixtures to remain near Pier E1.
CKT #244-2T	480V power to Westbound UD North-West temporary lighting	3/C #6 + G	Armored 600 V	3/C #6 + G	(3)	(E) LVCC-C control Center (ckt #29)	
CKT #G30-2T	Equipment ground and bridge tie	1-#500 MCM insulated	600 V	1-#500 MCM insulated		Splice Point in (E) vault #2A	Splice Point near (E) Pier E1

Caltrans Metric

DIST	COUNTY	ROUTE	POST MILE / TOTAL PROJECT	SHEET NO.	TOTAL SHEETS
04	SF	80			

Carol Light 04/15/08
REGISTERED ELECTRICAL ENGINEER — DATE

CAROL LIGHT No. 10145 Exp. 09/30/08 ELECTRICAL — REGISTERED PROFESSIONAL ENGINEER — STATE OF CALIFORNIA

PLANS APPROVAL DATE

PB Americas, Inc.
303 Second St., Suite 700N
San Francisco, CA 94107-1317

SILVERMAN & LIGHT
1200 PARK AVENUE - SUITE 100
EMERYVILLE, CA 94608-3632

The State of California or its officers or agents shall not be responsible for the accuracy or completeness of electronic copies of this plan sheet.

Caltrans now has a web site! To get to the web site, go to http://www.dot.ca.gov

SHEET NOTES:

(1) Intercept existing circuits shown in table A with new cable.

(2) Install and connect new cables from existing circuits #241, #242 and #249 in (E) TB-20E and route to temporary South-South detour lower deck lighting circuits.

(3) At (E) LVCC-C located in (E) YB1 substation, install and splice new temporary cable for CKT #244- and route temporary cable to temporary South-South detour UD North-East lighting to remain.

CONTRACT NO. 04-0120R4

CONTRACT CHANGE ORDER NO 134

SHEET 76 OF 94

MARK	DATE	DESCRIPTIONS REVISIONS	BY	CH'K	CCO#

CONTRACT CHANGE ORDER NO. ____
SHEET ____ OF ____

DETAILS
CABLE SCHEDULE
TEMPORARY BYPASS STRUCTURE-EAST TIE IN

NO SCALE

E-9

STATE OF CALIFORNIA - DEPARTMENT OF TRANSPORTATION — Caltrans
DESIGN OVERSIGHT: HONG WONG
CALCULATED/DESIGNED BY | BJ | DATE | REVISED BY
CHECKED BY | CL | DATE REVISED

THIS PLAN ACCURATE FOR ELECTRICAL WORK ONLY

FOR REDUCED PLANS ORIGINAL SCALE IS IN MILLIMETERS 0 20 40 60 80

DGN FILE => E:\e3103\southbar\ecco etl-1\transmit\ecco subset
USERNAME => reyesl

Tot 2008050270 eddwg\44120 4of85.dgn
CU 04251 EA 0120R4

DATE PLOTTED => 9-27-2008
TIME PLOTTED => 09:45:11 PM

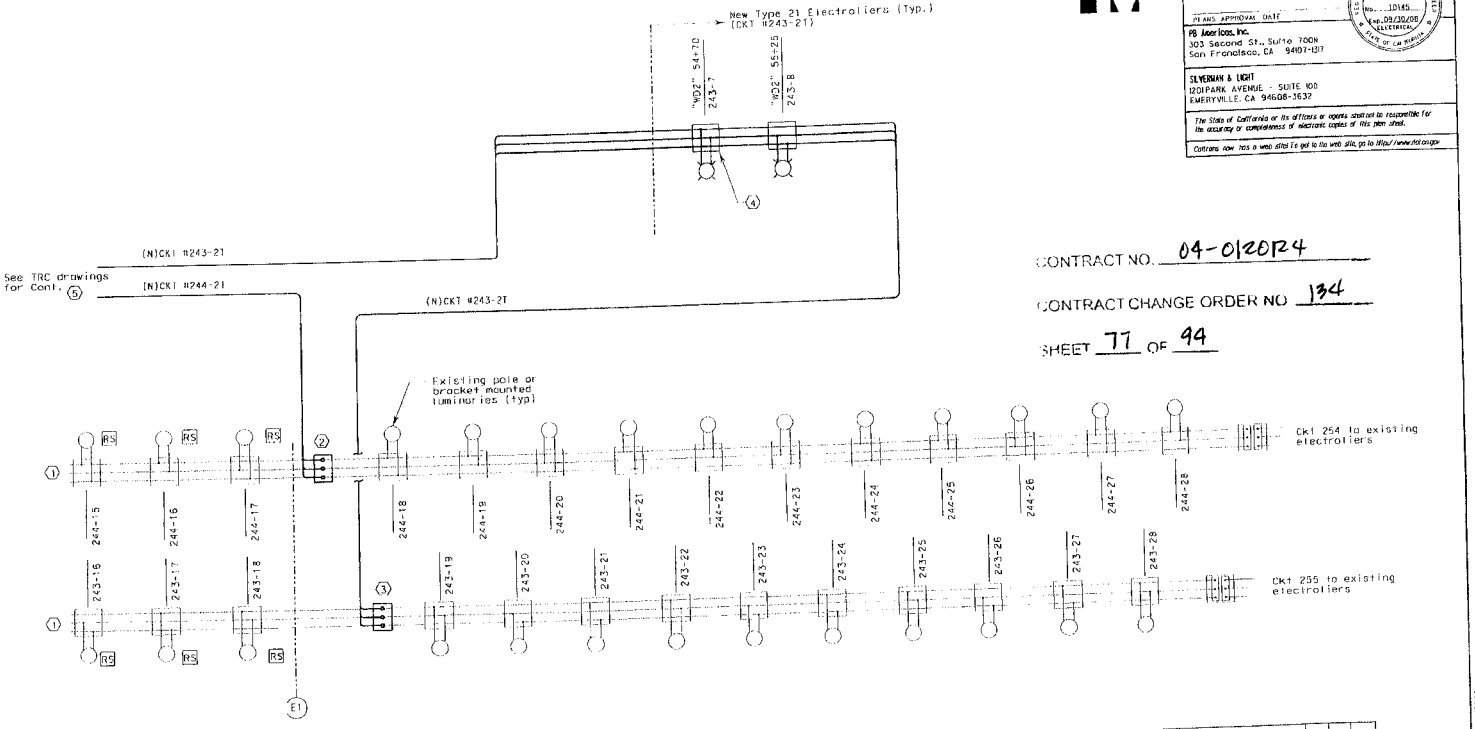

CONTRACT NO. 04-012024

CONTRACT CHANGE ORDER NO 134

SHEET 77 OF 94

SHEET NOTES:

1. Existing Luminaires from bent #48 through pier E1 to be removed in bridge demolition (Westbound North).
2. Locate, intercept and reconnect to maintain power to existing electroliers 244-18 through 244-28. Provide and install junction box as needed.
3. Locate, intercept and reconnect to maintain power to existing electroliers 243-19 through 243-28. Provide and install new junction box as needed.
4. Fused splice connectors to be used for each ungrounded conductors between line and ballast (Typical).
5. See TRC Drawings for continuation.

NOTES:

1. Reference:
   - For Cable Schedule, see E-9

MARK	DATE	DESCRIPTIONS	BY	CHK'D	ECCR#
		REVISIONS			

CONTRACT CHANGE ORDER NO. .....
SHEET ____ OF ____

DETAILS
WESTBOUND LIGHTING DIAGRAM
TEMPORARY BYPASS STRUCTURE-EAST TIE IN

NO SCALE

E-10

THIS PLAN ACCURATE FOR ELECTRICAL WORK ONLY

FOR REDUCED PLANS ORIGINAL SCALE IS IN MILLIMETERS 0 20 40 60 80

DGN FILE s:\rtes\103\southsidebar\ccd eli-1\12rmsmt1\ccd sub-1\tel 20080502\roadway\e120r-rd10.dgn
USERNAME = s\reyes\

CU 04251 EA 012024

DATE PLOTTED = 6/27/2008
TIME PLOTTED = 07:32:32 PM

CALCULATED/DESIGNED BY CL
CHECKED BY HONG WONG
DESIGN OVERSIGHT
REVISED BY DATE REVISED

STATE OF CALIFORNIA - DEPARTMENT OF TRANSPORTATION
Caltrans

DIST 04 | COUNTY SF | ROUTE 80 | KILOMETER POST (TOTAL PROJECT) | SHEET No. | TOTAL SHEETS

Carol Light 04/15/08
REGISTERED ELECTRICAL ENGINEER DATE

CAROL LIGHT No. 10169 Exp. 09/30/08 ELECTRICAL

PLANS APPROVAL DATE

PB Americas, Inc.
303 Second St., Suite 700N
San Francisco, CA 94107-1317

SILVERMAN & LIGHT
1201 PARK AVENUE - SUITE 100
EMERYVILLE, CA 94608-3632

The State of California or its officers or agents shall not be responsible for its accuracy or completeness of electronic copies of this item sheet.

Caltrans now has a web site! To get to the web site, go to http://www.dot.ca.gov

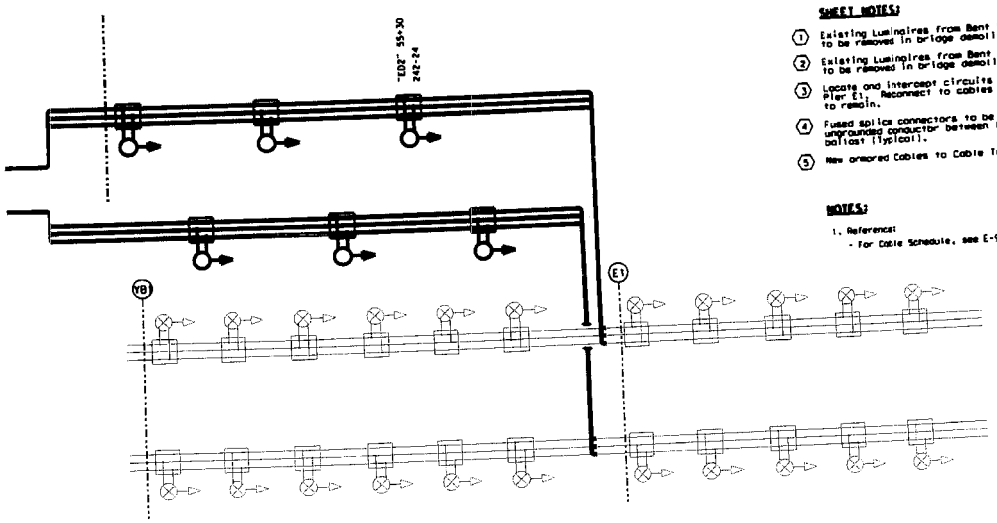

SHEET NOTES:

1. Existing Luminaires from Bent YB1 through Bent E1 to be removed in bridge demolition (Eastbound North).
2. Existing Luminaires from Bent YB1 through Bent E1 to be removed in bridge demolition (Eastbound South).
3. Locate and intercept circuits #241 and #242 at Pier E1. Reconnect to cables supplying luminaires to remain.
4. Fused splice connectors to be used for each ungrounded conductor between lins and ballast (typical).
5. New armored Cables to Cable Tray to East Span.

NOTES:

1. Reference:
   - For Cable Schedule, see E-9

CONTRACT NO. 04-0120R4

CONTRACT CHANGE ORDER NO. 134

SHEET 78 OF 94

DETAILS
EASTBOUND LIGHTING DIAGRAM
TEMPORARY BYPASS STRUCTURE-EAST TIE IN

NO SCALE

E-11R1

THIS PLAN ACCURATE FOR ELECTRICAL WORK ONLY

FOR REDUCED PLANS ORIGINAL SCALE IS IN MILLIMETERS

0 20 40 60 80

DGN FILE => $REQUEST
USERNAME => $USER

CU 04251

EA 0120R4

C:\ETIWTI\4120R4ua11R1.dgn 11/25/2008 09:52:22 AM

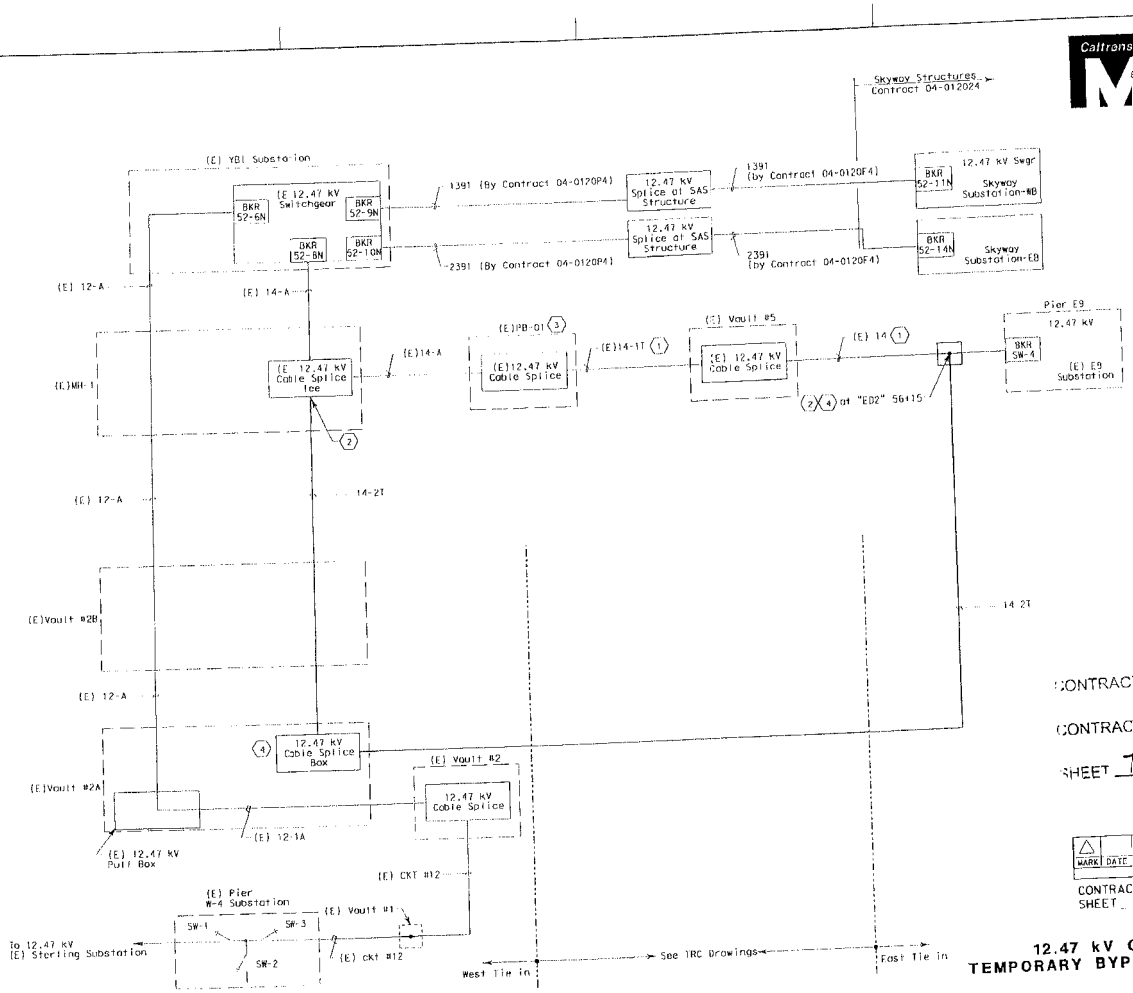

Caltrans Metric

DIST	COUNTY	ROUTE	RECOMMENDED TOTAL PROJECT	SHEET NO.	TOTAL SHEETS
04	SF	80			

Carol Light 04/15/08
REGISTERED ELECTRICAL ENGINEER DATE

CAROL LIGHT No. 10145 Exp. 09/30/08 ELECTRICAL STATE OF CALIFORNIA

PLANS APPROVAL DATE

PB Americas, Inc.
303 Second St., Suite 700N
San Francisco, CA 94107-1317

SILVERMAN & LIGHT
120 PARK AVENUE - SUITE 100
EMERYVILLE, CA 94608-3632

The State of California or its officers or agents shall not be responsible for the accuracy or completeness of electronic copies of this plan sheet.

Caltrans now has a web site! To get to the web site, go to http://www.dot.ca.gov

SHEET NOTES:

(1) Contractor shall disconnect and remove temporary cable when the new Temporary Installation of Temporary Bypass Structure cables from (E)sw-4 in (E) E9 Substation is completed.

(2) Intercept (E) East Span 12 kV cable. Splice cable as shown.

(3) PB-01 is mounted on the north retaining wall near Bent 50.

(4) Install new Nema 4X 12.47 kV Splice Box with minimum dimension 45"(W) x 610(D) x 1000(L)

NOTES:

1. References:
   - For cable schedule, and pull box schedule see sheet E-9.

CONTRACT NO. 04-0120R4

CONTRACT CHANGE ORDER NO 134

SHEET 79 OF 94

MARK	DATE	DESCRIPTIONS REVISIONS	BY	CH'D	CCO#

CONTRACT CHANGE ORDER NO.
SHEET OF

DETAILS
12.47 kV CABLE BLOCK DIAGRAM TEMPORARY BYPASS STRUCTURE-EAST TIE IN

NO SCALE

E-12

STATE OF CALIFORNIA - DEPARTMENT OF TRANSPORTATION
Caltrans
DESIGN OVERSIGHT: HONG WONG
CALCULATED/DESIGNED BY: BU
CHECKED BY: CL
DATE REVISED
REVISED BY
DATE

THIS PLAN ACCURATE FOR ELECTRICAL WORK ONLY

FOR REDUCED PLANS ORIGINAL SCALE IS IN MILLIMETERS 0 20 40 60 80

DGN FILE: p:\43103\sequitedata\cco attachments\cco submittal 20080502\roadway\4120r4a12.dgn
USERNAME: p:reyes

EA 0120R4

DOCUMENT DATE PLOTTED = 5/2/2008
DD-MM-YY
TIME PLOTTED = 4:22:16 PM

DIST	COUNTY	ROUTE	KILOMETER POST TOTAL PROJECT	SHEET No.	TOTAL SHEETS
04	SF	80			

Caltrans Metric

Carol Light 04/15/08
REGISTERED ELECTRICAL ENGINEER DATE

PLANS APPROVAL DATE

REGISTERED PROFESSIONAL ENGINEER CAROL LIGHT No. 10145 Exp. 09/30/08 ELECTRICAL STATE OF CALIFORNIA

PB Americas, Inc.
303 Second St., Suite 700N
San Francisco, CA 94107-1317

SILVERMAN & LIGHT
1201 PARK AVENUE - SUITE 100
EMERYVILLE, CA 94608-3632

The State of California or its officers or agents shall not be responsible for the accuracy or completeness of electronic copies of this plan sheet.

Caltrans now has a web site! To get to the web site, go to http://www.dot.ca.gov

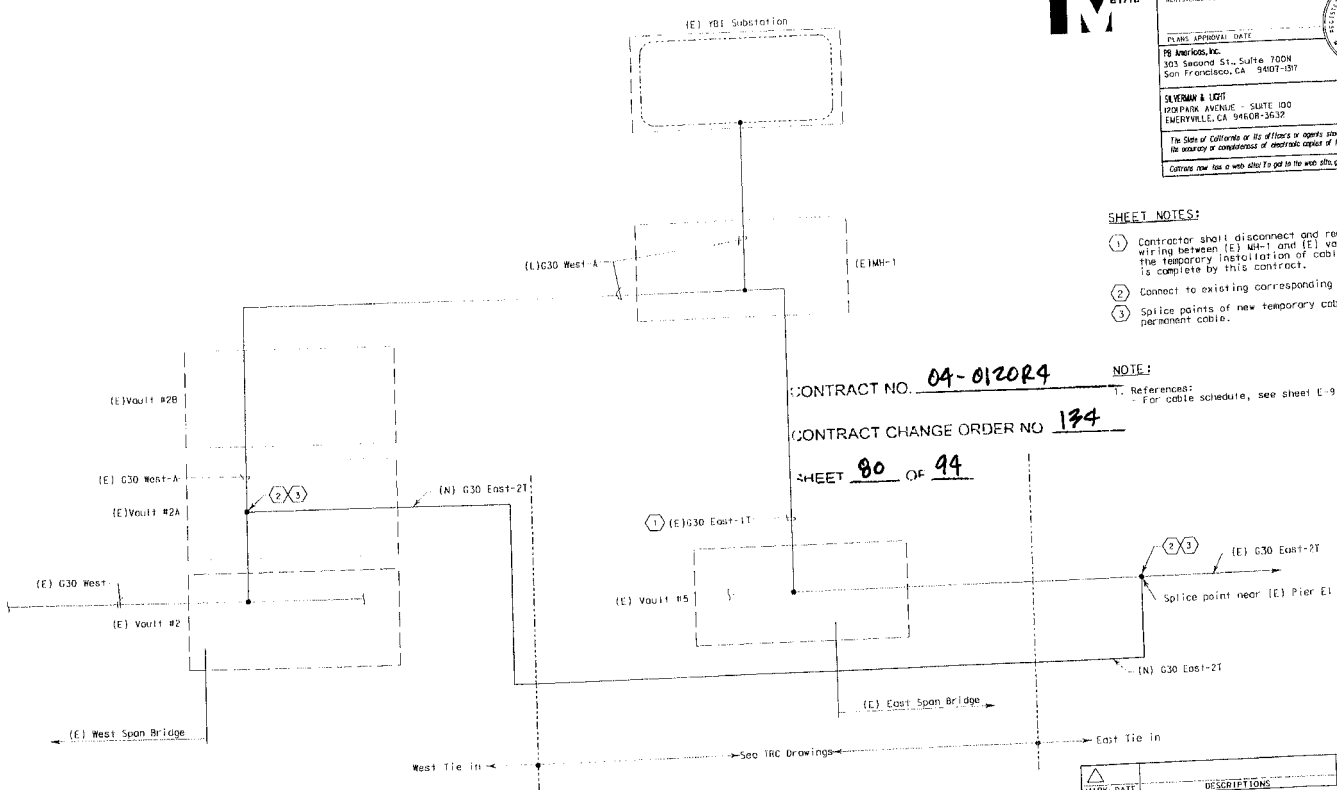

GROUND CONDUCTOR BLOCK DIAGRAM

SHEET NOTES:

1. Contractor shall disconnect and remove temporary wiring between (E) MH-1 and (E) vault #5 when the temporary installation of cables to Vault #2A is complete by this contract.
2. Connect to existing corresponding ground.
3. Splice points of new temporary cable to existing permanent cable.

NOTE:

1. References:
   - For cable schedule, see sheet E-9

CONTRACT NO. 04-0120R4

CONTRACT CHANGE ORDER NO 134

SHEET 80 OF 94

MARK	DATE	DESCRIPTIONS	BY	CH'D	CCD#
		REVISIONS			

CONTRACT CHANGE ORDER NO. ____
SHEET ____ OF ____

DETAILS
GROUND CONDUCTOR BLOCK DIAGRAM
TEMPORARY BYPASS STRUCTURE-EAST TIE IN
NO SCALE

E-13

STATE OF CALIFORNIA - DEPARTMENT OF TRANSPORTATION
Caltrans

DESIGN OVERSIGHT: HONG WONG
CALCULATED/DESIGNED BY: BJ DATE REVISED BY
CHECKED BY: CL DATE REVISED

THIS PLAN ACCURATE FOR ELECTRICAL WORK ONLY

FOR REDUCED PLANS ORIGINAL SCALE IS IN MILLIMETERS 0 20 40 60 80

DGN FILE => I:\13103\southdetour\cco eli-i\transmit\cco subwi
USERNAME => reyes

fat 20080502\roadway\4120r4ae13.dgn
CU 04251
EA 0120R4

DATE PLOTTED => 5/2/2008
TIME PLOTTED => 4:22:19 PM
00-00-00

DIST	COUNTY	ROUTE	TOTAL PROJECT	NO.	SHEETS
04	SF	80			

Caltrans Metric

REGISTERED ELECTRICAL ENGINEER 04/15/08 DATE

PLANS APPROVAL DATE

REGISTERED PROFESSIONAL ENGINEER CAROL LIGHT No. 10145 Exp. 09/30/08 ELECTRICAL STATE OF CALIFORNIA

PB Americas, Inc.
303 Second St., Suite 700N
San Francisco, CA 94107-1317

SILVERMAN & LIGHT
1201 PARK AVENUE - SUITE 100
EMERYVILLE, CA 94608-3632

The State of California or its officers or agents shall not be responsible for the accuracy or completeness of electronic copies of this plan sheet.

Caltrans now has a web site! To get to the web site, go to http://www.dot.ca.gov

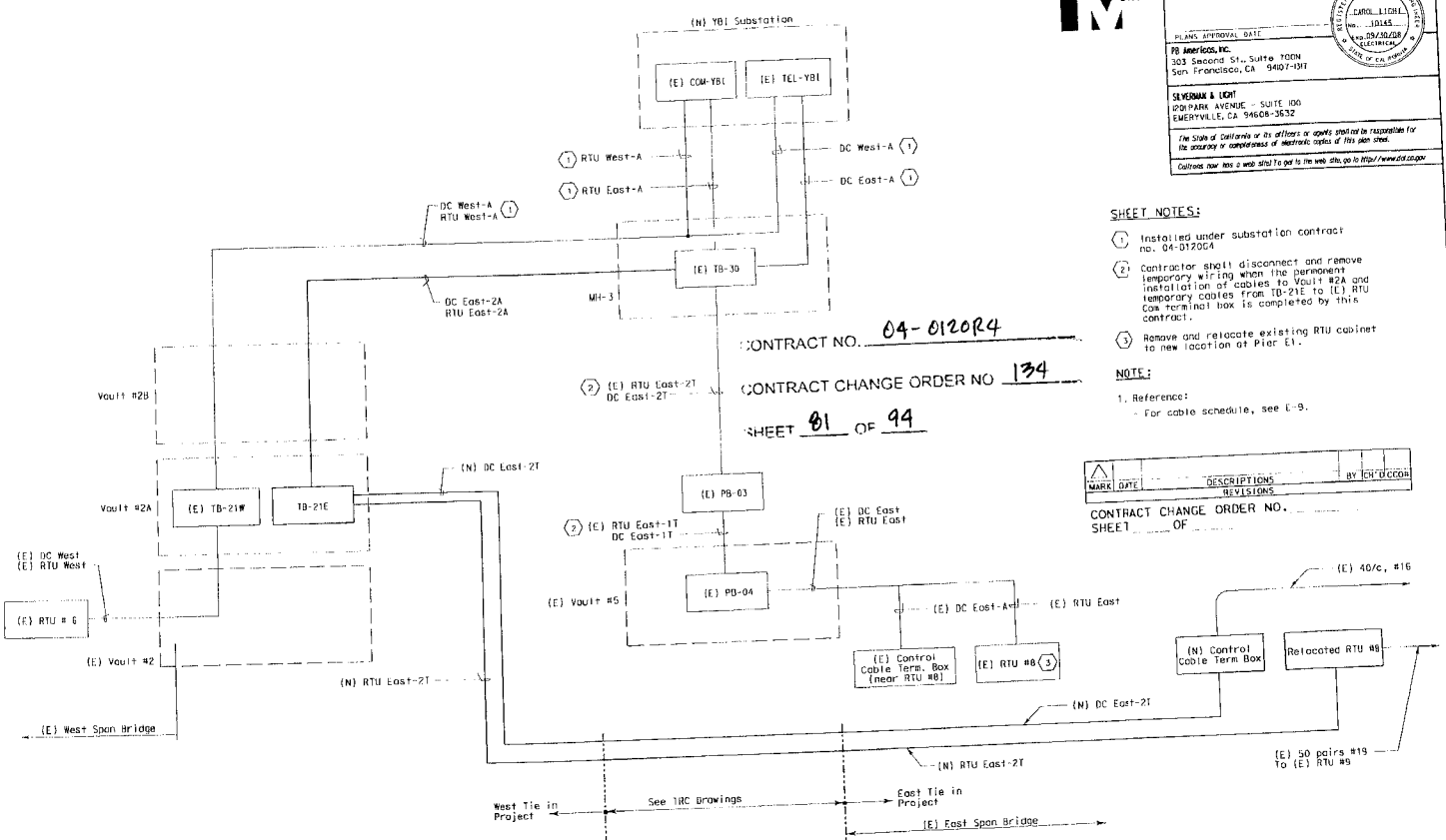

CONTRACT NO. 04-0120R4

CONTRACT CHANGE ORDER NO 134

SHEET 81 OF 94

SHEET NOTES:

1. Installed under substation contract no. 04-0120C4
2. Contractor shall disconnect and remove temporary wiring when the permanent installation of cables to Vault #2A and temporary cables from TB-21E to (E) RTU Com terminal box is completed by this contract.
3. Remove and relocate existing RTU cabinet to new location at Pier E1.

NOTE:

1. Reference:
   - For cable schedule, see E-9.

MARK	DATE	DESCRIPTIONS	BY	CH'D	CCO#
		REVISIONS			

CONTRACT CHANGE ORDER NO. ____
SHEET ____ OF ____

SCADA AND COMMUNICATION BLOCK DIAGRAM

DETAILS
SCADA AND COMMUNICATION CABLE BLOCK DIAGRAM
TEMPORARY BYPASS STRUCTURE-EAST TIE IN

NO SCALE

E-14

STATE OF CALIFORNIA - DEPARTMENT OF TRANSPORTATION

Caltrans

DESIGN OVERSIGHT: HONG WONG

CALCULATED/DESIGNED BY: BJ DATE

CHECKED BY: CL

REVISED BY

DATE REVISED

THIS PLAN ACCURATE FOR ELECTRICAL WORK ONLY

FOR REDUCED PLANS ORIGINAL SCALE IS IN MILLIMETERS 0 20 40 60 80

DGN FILE => t:\t3103\southdetour\cco ch-1\transmit\cco submi
USERNAME => reyes1

tel 20080502\roadway\4120r4ucl4.dgn
CU 04251 EA 0120R4

LAST REVISION 00-00-00 DATE PLOTTED => 5/2/2008 TIME PLOTTED => 4:22:28 PM

SHEET NOTES

1. Intercept existing RTU armored cable (50 pr #19) and terminate to new RTU #8 cabinet location. See Sheet E-17 for more information.
2. Intercept existing Control armored cable (40/c, #16) and terminate to new Control cable terminal box. See Sheet E-17 for more information.
3. Intercept existing armored cable with 3/c, #2 conductors (480 V, RTU-8 Main feeder) and terminate in new Service Cabinet.
4. Disconnect, Remove and relocate ex sting RTU #8 Cabinet to new location at existing Pier 61.

CONTRACT NO. 04-0120R4

CONTRACT CHANGE ORDER NO 134

SHEET 82 OF 94

DIST	COUNTY	ROUTE	KILOMETER POST TOTAL PROJECT	SHEET NO.	TOTAL SHEETS
04	SF	80			

Carol Light 04/15/08
REGISTERED ELECTRICAL ENGINEER DATE

CAROL LIGHT No. 18145 Exp. 09/30/08 ELECTRICAL

PLANS APPROVAL DATE

PB Americas, Inc.
303 Second St., Suite 700N
San Francisco, CA 94107-1317

SILVERMAN & LIGHT
1210 PARK AVENUE - SUITE 100
EMERYVILLE, CA 94608-3632

The State of California or its officers or agents shall not be responsible for the accuracy or completeness of electronic copies of this plan sheet.

Caltrans now has a web site! To get to the web site, go to http://www.dot.ca.gov

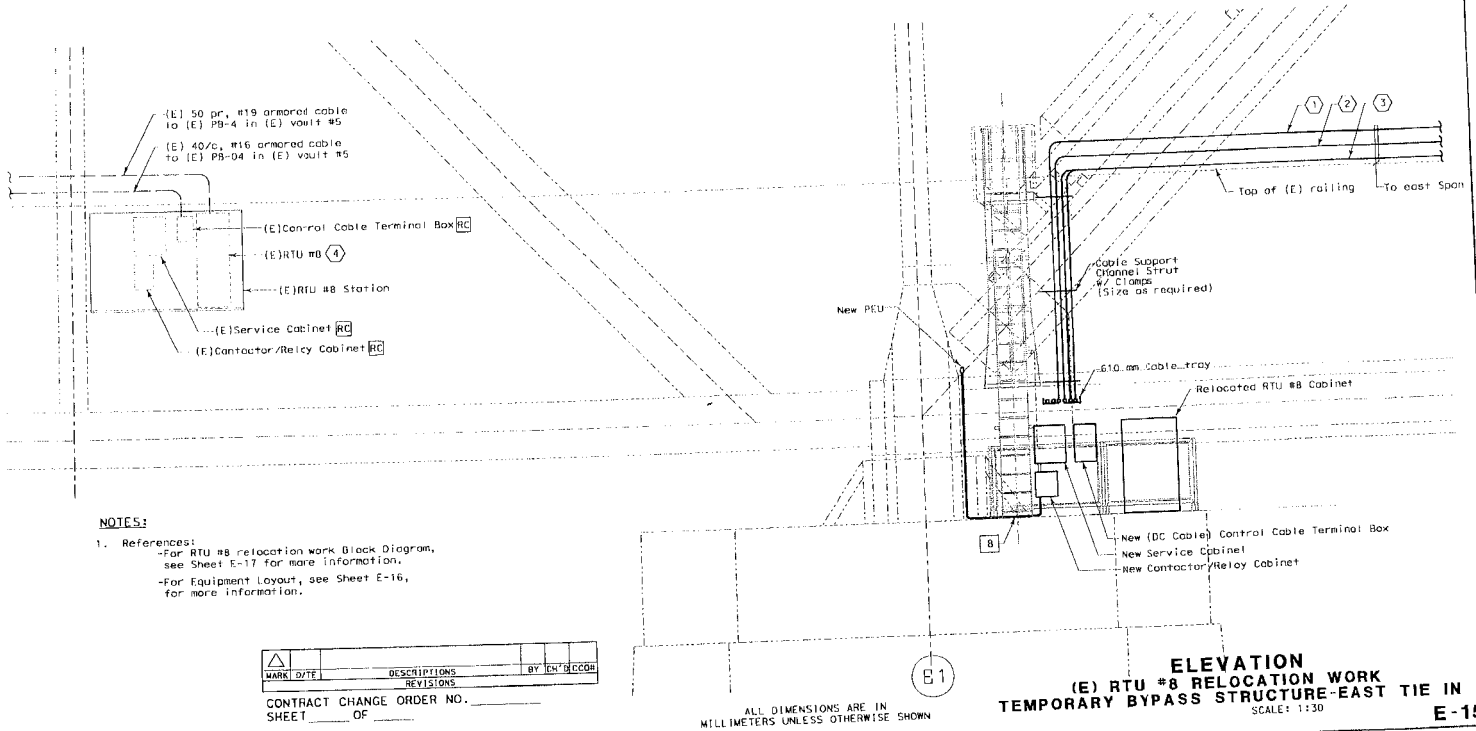

NOTES:

1. References:
   - For RTU #8 relocation work Block Diagram, see Sheet E-17 for more information.
   - For Equipment Layout, see Sheet E-16, for more information.

MARK	DATE	DESCRIPTIONS	BY	CH'D	CCO#
		REVISIONS			

CONTRACT CHANGE ORDER NO. _____
SHEET _____ OF _____

B1

ALL DIMENSIONS ARE IN MILLIMETERS UNLESS OTHERWISE SHOWN

ELEVATION
(E) RTU #8 RELOCATION WORK
TEMPORARY BYPASS STRUCTURE-EAST TIE IN

SCALE: 1:30

E-15

STATE OF CALIFORNIA - DEPARTMENT OF TRANSPORTATION
Caltrans
DESIGN OVERSIGHT: HONG WONG
CALCULATED/DESIGNED BY: BJ
CHECKED BY: CL
DATE REVISED BY
DATE REVISED

THIS PLAN ACCURATE FOR ELECTRICAL WORK ONLY

FOR REDUCED PLANS ORIGINAL SCALE IS IN MILLIMETERS 0 20 40 60 80

DGN FILE => P:\ST303\sourcedata\cco eti-1\transbit\cco submit
USERNAME => rayesi

tol 20080502\roadway\4120r4u15.dgn
CU 04251
EA 0120R4

DATE PLOTTED => 5/2/2008
TIME PLOTTED => 4:22:36 PM
DO NOT REVISE
DC-00-00

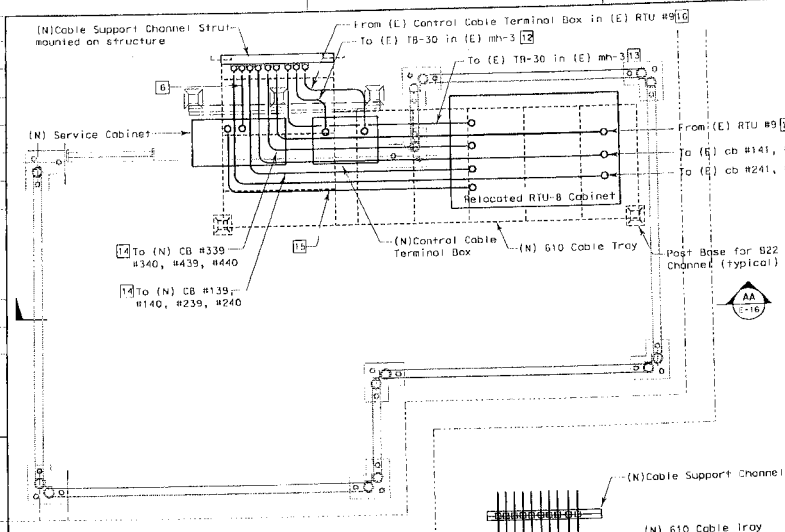

PLAN

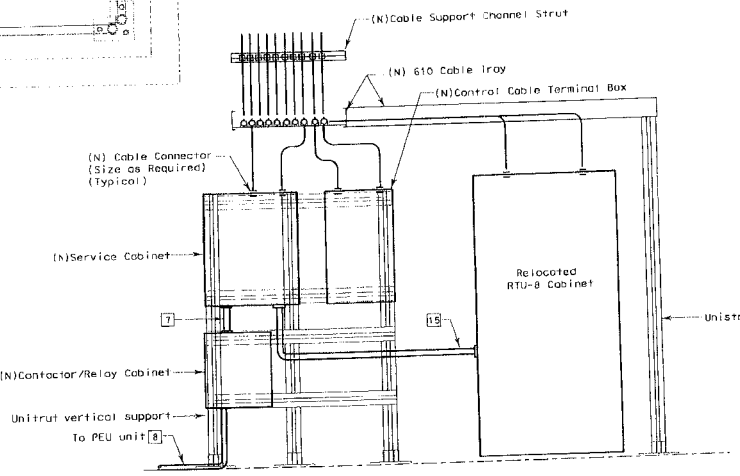

SECTION AA

NOTES:

1. Reference:
   -See RTU #8 Block Diagram on Sheet E-18

CONTRACT NO. 04-0120R4

CONTRACT CHANGE ORDER NO. 134

SHEET 83 OF 94

MARK	DATE	DESCRIPTIONS	BY	CH'D	ECC'D
		REVISIONS			

CONTRACT CHANGE ORDER NO. _____
SHEET _____ OF _____

DETAILS
NEW RTU #8 STATION
TEMPORARY BYPASS STRUCTURE-EAST TIE IN

SCALE: 1:10

E-16

DIST	COUNTY	ROUTE	TOTAL PROJECT	NO.	SHEETS
04	SF	80			

Caltrans Metric

Carol Light 04/15/08
REGISTERED ELECTRICAL ENGINEER DATE

REGISTERED PROFESSIONAL ENGINEER CAROL LIGHT No. 10145 Exp. 09/30/08 ELECTRICAL STATE OF CALIFORNIA

PLANS APPROVAL DATE

PG Associates, Inc.
303 Second St., Suite 700N
San Francisco, CA 94107-1317

SILVERMAN & LIGHT
1201 PARK AVENUE - SUITE 100
EMERYVILLE, CA 94608-3632

The State of California or its officers or agents shall not be responsible for the accuracy or completeness of electronic copies of this plan sheet.

Caltrans now has a web site! To get to the web site, go to http://www.dot.ca.gov

STATE OF CALIFORNIA - DEPARTMENT OF TRANSPORTATION
Caltrans
DESIGN OVERSIGHT: HONG WONG
CALCULATED/DESIGNED BY: BJ
CHECKED BY: CL
DATE REVISED
REVISED BY

THIS PLAN ACCURATE FOR ELECTRICAL WORK ONLY

FOR REDUCED PLANS ORIGINAL SCALE IS IN MILLIMETERS 0 20 40 60 80

ALL DIMENSIONS ARE IN METERS UNLESS OTHERWISE SHOWN

DGN FILE => \\t1\t3103\southbetour\tco ort-1\transmit\tco submittal 20080502\roadway\4120r4ut16.dgn
USERNAME => reyosi

CU 04251 EA 0120R4

DATE PLOTTED => 5/2/2008
TIME PLOTTED => 4:12:46 PM

NOTES:

1. Electrical contractor shall verify locations of existing electrical cabinets, panels and raceways prior to installing new equipment.

2. Once the old conductors have been terminated in the new cabinets, box, and relocated RTU cabinet and the new conductors have been installed and connected, Contractor shall remove all abandoned cabinets, panels raceways and conductors. Removed material shal become the property of the Contractor.

CONTRACT NO. 04-0120R4

CONTRACT CHANGE ORDER NO 134

SHEET 84 OF 94

Caltrans Metric

DIST	COUNTY	ROUTE	TOTAL PROJECT
04	SF	80	

Carol Light 04/15/08
REGISTERED ELECTRICAL ENGINEER DATE

PLANS APPROVAL DATE

REGISTERED PROFESSIONAL ENGINEER CAROL LIGHT No. 10145 Exp. 09/30/08 ELECTRICAL STATE OF CALIFORNIA

PB Americas, Inc.
303 Second St., Suite 700N
San Francisco, CA 94107-1317

SILVERMAN & LIGHT
1200 PARK AVENUE - SUITE 100
EMERYVILLE, CA 94608-3632

The State of California or its officers or agents shall not be responsible for the accuracy or completeness of electronic copies of this plan sheet.

Caltrans now has a web site! To get to the web site, go to http://www.dot.ca.gov

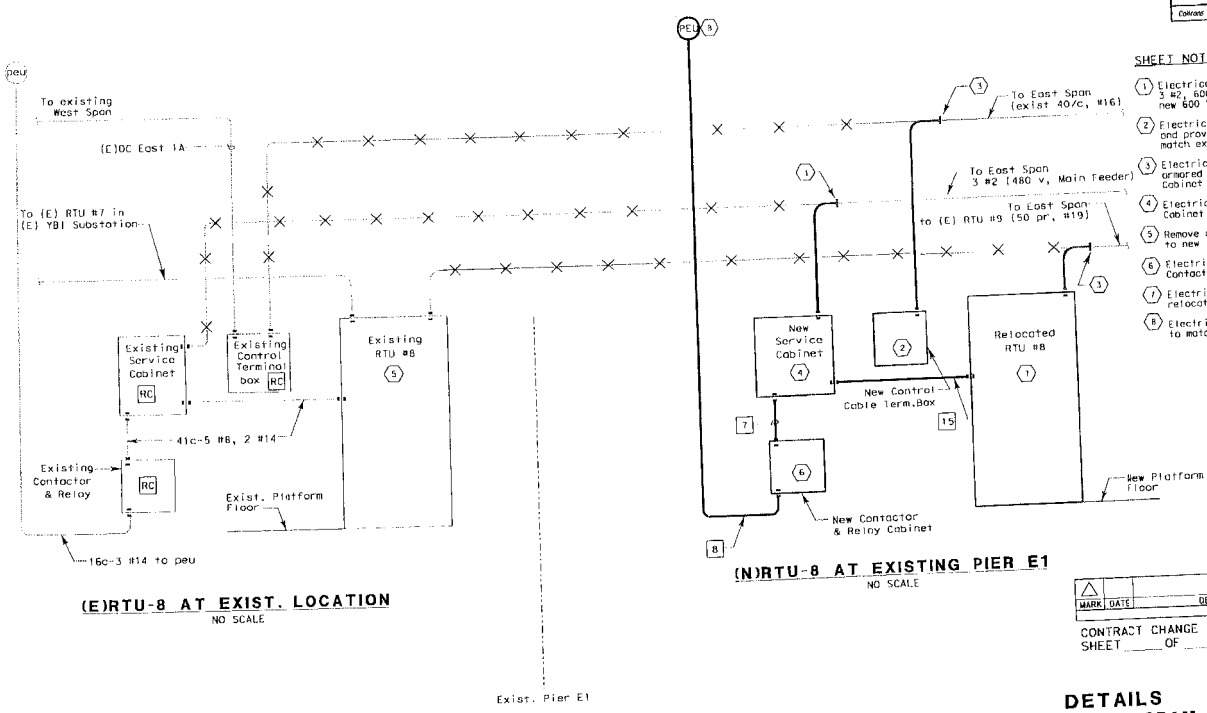

(E)RTU-8 AT EXIST. LOCATION
NO SCALE

(N)RTU-8 AT EXISTING PIER E1
NO SCALE

SHEET NOTES:

1. Electrical Contractor shall intercept existing 3 #2, 600 V armored cables and terminate in new 600 V Terminal Box.
2. Electrical Contractor shall install Terminal box and provide terminal blocks rated 300 V to match existing.
3. Electrical Contractor shall intercept existing armored cable(s) and terminate in respective Cabinet and Boxes as shown.
4. Electrical Contractor shall install new Service Cabinet to match existing.
5. Remove and relocate existing RTU #8 cabinet to new location at existing Pier E1.
6. Electrical Contractor shall install new Contactor/Relay Cabinet to match existing.
7. Electrical Contractor shall install the relocated RTU #8 Cabinet to new location.
8. Electrical Contractor shall install new PEU to match existing.

MARK	DATE	DESCRIPTIONS	BY	CH'D	CCOW
		REVISIONS			

CONTRACT CHANGE ORDER NO. _____
SHEET ____ OF ____

DETAILS
(E) RTU #8 RELOCATION WORK BLOCK DIAGRAM FIRST ORDER OF WORK TEMPORARY BYPASS STRUCTURE- EAST TIE IN
NO SCALE

E-17

THIS PLAN ACCURATE FOR ELECTRICAL WORK ONLY

FOR REDUCED PLANS ORIGINAL SCALE IS IN MILLIMETERS 0 20 40 60 80

DGN FILE => t:\t3103\southdetour\cco eti-1\transmit\cco submit\ 20080502\roadway\4120r4ut17.dgn
USERNAME => reyest
CU 04251
EA 0120R4

DATE PLOTTED => 5/2/2008
TIME PLOTTED => 4:22:55 PM
00-00-00

STATE OF CALIFORNIA - DEPARTMENT OF TRANSPORTATION
Caltrans

DESIGN OVERSIGHT: HONG WONG
CALCULATED/DESIGNED BY: BJ
CHECKED BY: CL
DATE REVISED BY
DATE REVISED

DIST	COUNTY	ROUTE	KILOMETER POST TOTAL PROJECT	SHEET NO	SHEETS
04	SF	BO			

Caltrans Metric

Carol Lignx 04/15/08
REGISTERED ELECTRICAL ENGINEER DATE

PLANS APPROVAL DATE

REGISTERED PROFESSIONAL ENGINEER CAROL LIGHT No. 10145 Exp. 09/30/08 ELECTRICAL STATE OF CALIFORNIA

PB Americas, Inc.
303 Second St., Suite 700N
San Francisco, CA 94107-1317

SILVERMAN & LIGHT
1201 PARK AVENUE - SUITE 100
EMERYVILLE, CA 94608-3632

The State of California or its officers or agents shall not be responsible for the accuracy or completeness of electronic copies of this plan sheet.

Caltrans now has a web site! To get to the web site, go to http://www.dot.ca.gov

NOTES:

1. Electrical contractor shall verify locations of existing electrical cabinets, panels and raceways prior to installing new equipment.
2. For Cabinet and Boxes Dimensions, see Sheet E-23

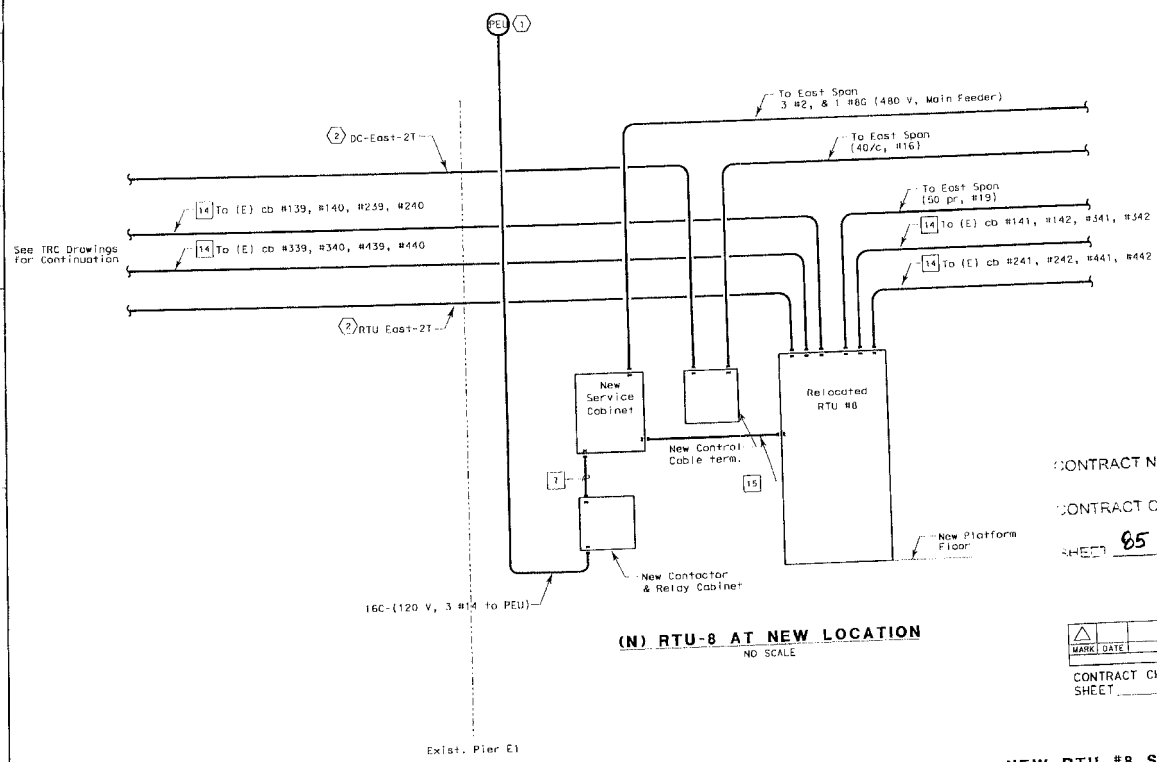

(N) RTU-8 AT NEW LOCATION
NO SCALE

SHEET NOTES:

1. Electrical Contractor shall install new Photo Electric Unit (PEU) to match existing.
2. New Cables routed on New Cable Tray. Provide Cable Clamps to secure cable on the Cable Tray every 1.5 meters.

CONTRACT NO. 04-0120R4

CONTRACT CHANGE ORDER NO 134

SHEET 85 OF 94

MARK	DATE	DESCRIPTIONS	BY	CH'D	CCO#
		REVISIONS			

CONTRACT CHANGE ORDER NO. ____
SHEET ____ OF ____

DETAILS
NEW RTU #8 STATION BLOCK DIAGRAM
TEMPORARY BYPASS STRUCTURE- EAST TIE IN
NO SCALE

E-18

STATE OF CALIFORNIA - DEPARTMENT OF TRANSPORTATION
Caltrans

DESIGN OVERSIGHT: HONG WONG
CALCULATED/DESIGNED BY: BJ DATE
CHECKED BY: CL DATE REVISED
REVISED BY
DATE REVISED

THIS PLAN ACCURATE FOR ELECTRICAL WORK ONLY

FOR REDUCED PLANS ORIGINAL SCALE IS IN MILLIMETERS 0 20 40 60 80

DGN FILE => I:\13103\southdetour\cco eti-1\transmit\cco submittal 20080502\roadway\4120r4ue18.dgn
USERNAME => reyest
CU 04251 EA 0120R4

DATE PLOTTED => 5/2/2008
TIME PLOTTED => 4:23:05 PM

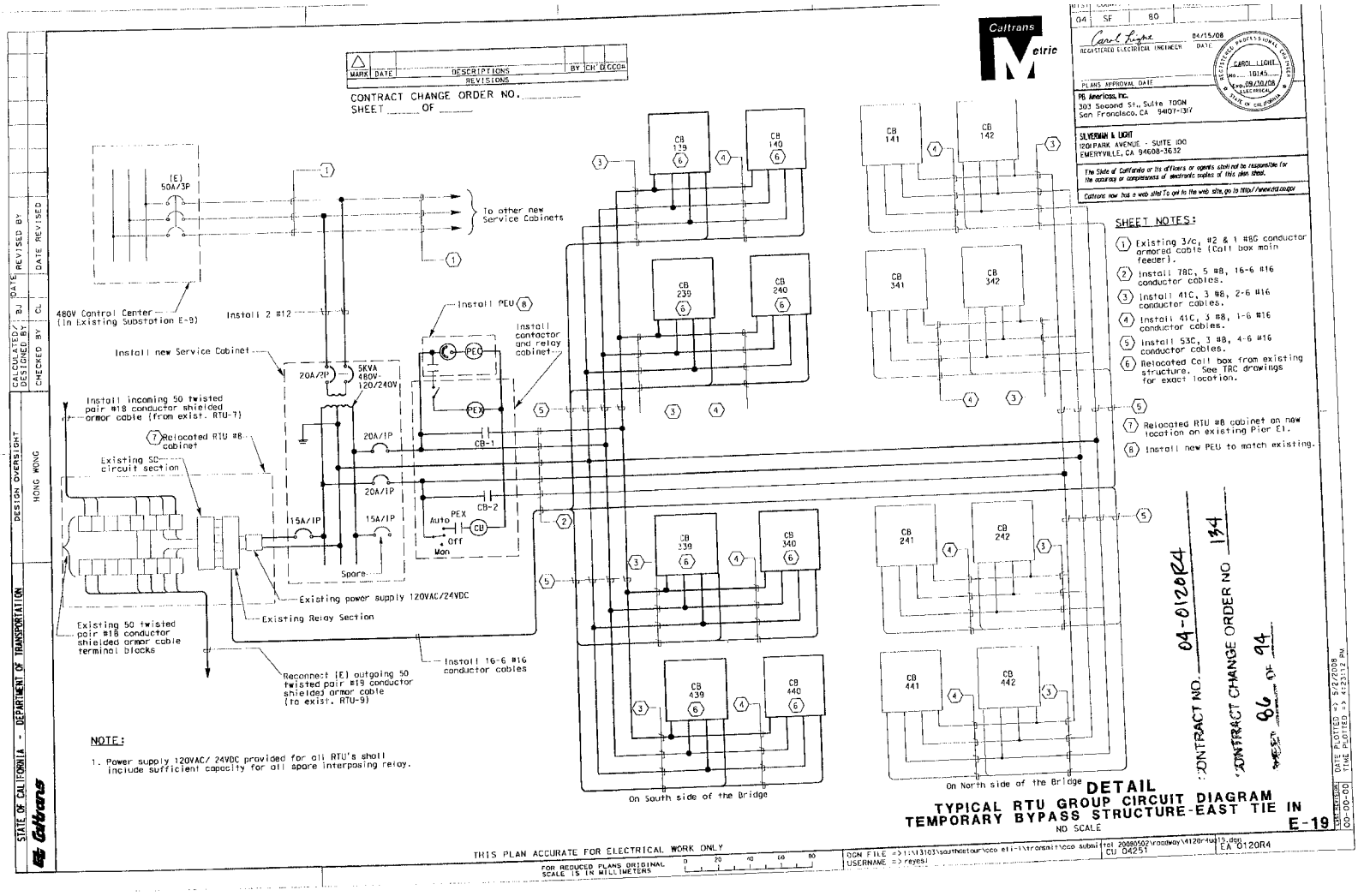
Caltrans Metric
MARK DATE DESCRIPTIONS BY CH'D CCOA
REVISIONS
CONTRACT CHANGE ORDER NO.
SHEET OF
04 SF 80
Carol Light 04/15/08
REGISTERED ELECTRICAL ENGINEER DATE
CAROL LIGHT No. 18145 Exp.09/30/08 ELECTRICAL
PLANS APPROVAL DATE
PB Americas, Inc.
303 Second St., Suite 700N
San Francisco, CA 94107-1317
SILVERMAN & LIGHT
1201 PARK AVENUE - SUITE 100
EMERYVILLE, CA 94608-3632
The State of California or its officers or agents shall not be responsible for the accuracy or completeness of electronic copies of this plan sheet.
Caltrans now has a web site! To get to the web site, go to http://www.dot.ca.gov
(E) 50A/3P
To other new Service Cabinets
480V Control Center (In Existing Substation E-9)
Install 2 #12
Install new Service Cabinet
20A/2P
5KVA 480V-120/240V
Install PEU (8)
PEC
PEX
Install contactor and relay cabinet
Install incoming 50 twisted pair #18 conductor shielded armor cable (from exist. RTU-7)
(7) Relocated RTU #8 cabinet
Existing SC circuit section
20A/1P
CB-1
20A/1P
20A/1P
CB-2
15A/1P
15A/1P
Auto PEX CU Off Man
Spare
Existing power supply 120VAC/24VDC
Existing Relay Section
Existing 50 twisted pair #18 conductor shielded armor cable terminal blocks
Reconnect (E) outgoing 50 twisted pair #19 conductor shielded armor cable (to exist. RTU-9)
Install 16-6 #16 conductor cables
CB 139 CB 140 CB 141 CB 142
CB 239 CB 240 CB 341 CB 342
CB 339 CB 340 CB 241 CB 242
CB 439 CB 440 CB 441 CB 442
On South side of the Bridge
On North side of the Bridge
SHEET NOTES:
(1) Existing 3/c, #2 & 1 #8G conductor armored cable (Call box main feeder).
(2) Install 78C, 5 #8, 16-6 #16 conductor cables.
(3) Install 41C, 3 #8, 2-6 #16 conductor cables.
(4) Install 41C, 3 #8, 1-6 #16 conductor cables.
(5) Install 53C, 3 #8, 4-6 #16 conductor cables.
(6) Relocated Call box from existing structure. See TRC drawings for exact location.
(7) Relocated RTU #8 cabinet on new location on existing Pier E1.
(8) Install new PEU to match existing.
NOTE:
1. Power supply 120VAC/ 24VDC provided for all RTU's shall include sufficient capacity for all spare interposing relay.
CONTRACT NO. 04-0120R4
CONTRACT CHANGE ORDER NO 134
86 OF 94
DETAIL
TYPICAL RTU GROUP CIRCUIT DIAGRAM
TEMPORARY BYPASS STRUCTURE-EAST TIE IN
NO SCALE
E-19
STATE OF CALIFORNIA - DEPARTMENT OF TRANSPORTATION
Caltrans
DESIGN OVERSIGHT HONG WONG
CALCULATED/ DESIGNED BY
CHECKED BY
DATE REVISED BY
DATE REVISED
THIS PLAN ACCURATE FOR ELECTRICAL WORK ONLY
FOR REDUCED PLANS ORIGINAL SCALE IS IN MILLIMETERS
0 20 40 60 80
DGN FILE => I:\i13103\southdetour\cco eli-1\transmit\cco submittal 20080502\roadway\4120r4ug15.dgn
USERNAME => reyes
CU 04251
EA 0120R4
DATE PLOTTED => 5/2/2008
TIME PLOTTED => 14:23:12 PW
LAST REVISION 00-00-00

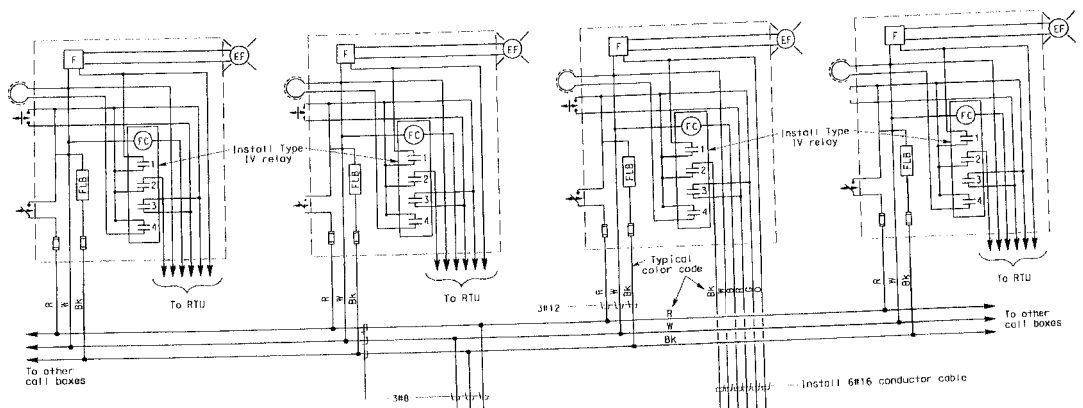

RTU INTERPOSING RELAYS-GENERAL OPERATING SCHEME

1. Initiatory CB flasher is activated locally by CJ pushbuttion. Magnetically held coil C3 is energized. Contact C3-1 closes and the signal for CB initiatory identification number and for Master station to energize Tandem flashers are transmitted. Tandem CB flashers are activated when SC command from Master station energizes latching coil C4B and closes contact C4B-1 of each respective circuit.

2. Initiatory CB flasher is deactivated locally when key operated switch is momentarily open at the initiatory CB. Coil FC and C3 de-energize and the flasher is deactivated. Contact C3-1 opens and signal is transmitted to Master station to deactivate Tandem CB flashers. Tandem CB circuit latching coil C4A is energized by SC command from master station. Contact C4A-1 closes and Tandem CB flashers are deactivated.

3. Initiatory CB flasher is activated remotely when SC command from Master station energizes magnetically helc coil C2. Contact C2-1 closes. Coil FC and C3 energize, contact C3-1 closes and signal is transmitted to Master station to activate Tandem CB flashers. Tandem CB flashers are activated in the same manner as described in 1.

4. Initiatory CB flasher is deactivated remotely when SC command from Master station energizes pulse operated coil C1, Contact C1-1 momentarily opens. Coil FC and C3 de-energize and initiatory CB flasher is deactivated.
Tandem CB flasher are deactivated in the same manner as described in 2.

5. When call box power is off, coil C5 de-energizes, contact C5-1 closes signal is transmitted to Master station.

NOTE:

1. See symbols and abbreviations on E-1.
2. For RTU #8 elementary connection, see E-21 and E-22

MARK	DATE	DESCRIPTIONS	BY	CHK'D
		REVISIONS		

CONTRACT CHANGE ORDER NO. _____
SHEET ____ OF ____

CONTRACT NO. 04-0120R4
CONTRACT CHANGE ORDER NO 134
SHEET 87 OF 94

DISTRICT 04 | COUNTY SF | ROUTE 80 | TOTAL PROJECT | NO SHEETS

Carol Light 04/15/08
REGISTERED ELECTRICAL ENGINEER DATE
CAROL LIGHT No. 10145 EXP. 09/30/09 ELECTRICAL
REGISTERED PROFESSIONAL ENGINEER STATE OF CALIFORNIA

PLANS APPROVAL DATE

PB Americas, Inc.
303 Second St., Suite 700N
San Francisco, CA 94107-1317

SILVERMAN & LIGHT
1201 PARK AVENUE - SUITE 100
EMERYVILLE, CA 94608-3632

The State of California or its officers or agents shall not be responsible for the accuracy or completeness of electronic copies of this plan sheet.

Caltrans now has a web site! To get to the web site, go to http://www.dot.ca.gov

STATE OF CALIFORNIA - DEPARTMENT OF TRANSPORTATION
DESIGN OVERSIGHT HONG WONG
CALCULATED/DESIGNED BY
CHECKED BY CL
DATE REVISED BY
DATE REVISED

DETAILS
TYPICAL CALL BOX SYSTEM TEMPORARY BYPASS STRUCTURE- EAST TIE IN
NO SCALE

E-20

THIS PLAN ACCURATE FOR ELECTRICAL WORK ONLY
FOR REDUCED PLANS ORIGINAL SCALE IS IN MILLIMETERS 0 20 40 60 80

DGN FILE => r:\n13103\southbatur\ccs ert-1\transmit\ccs submittal 20080507\roadway\4120r4a420.dgn
USERNAME => reyesl

CU 04251 EA 0120R4

DATE PLOTTED => 5/2/2008
TIME PLOTTED => 4:23:21 PM

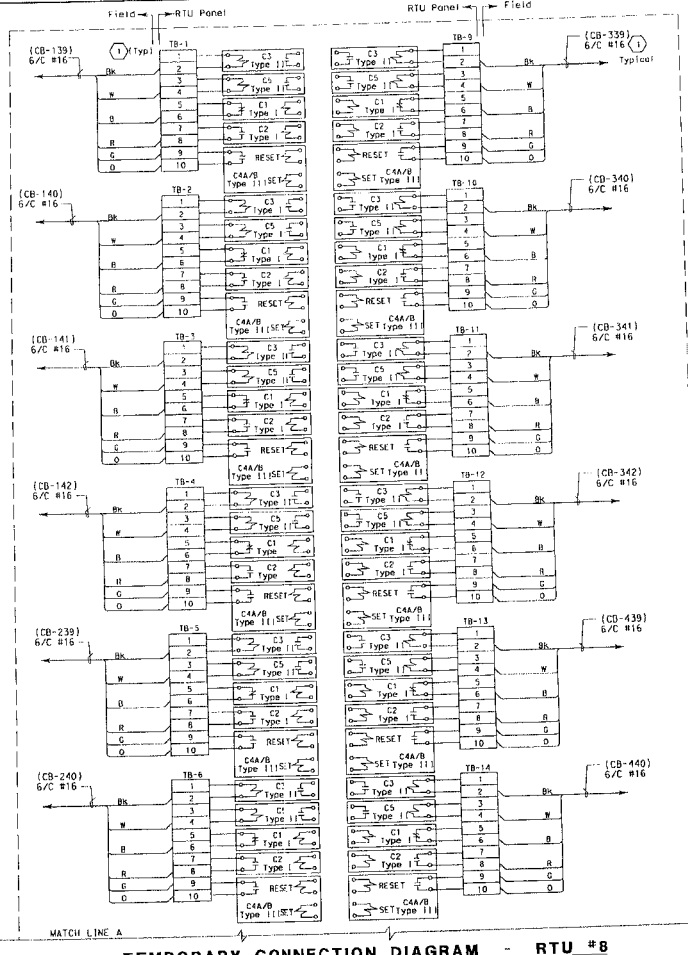

TEMPORARY CONNECTION DIAGRAM - RTU #8

THIS PLAN ACCURATE FOR ELECTRICAL WORK ONLY

FOR REDUCED PLANS ORIGINAL SCALE IS IN MILLIMETERS

0 20 40 60 80

CONTRACT NO. 04-0120R4

CONTRACT CHANGE ORDER NO 134

SHEET 88 OF 94

MARK	DATE	DESCRIPTIONS	BY	CH'D	CCO#
		REVISIONS			

CONTRACT CHANGE ORDER NO.
SHEET ____ OF ____

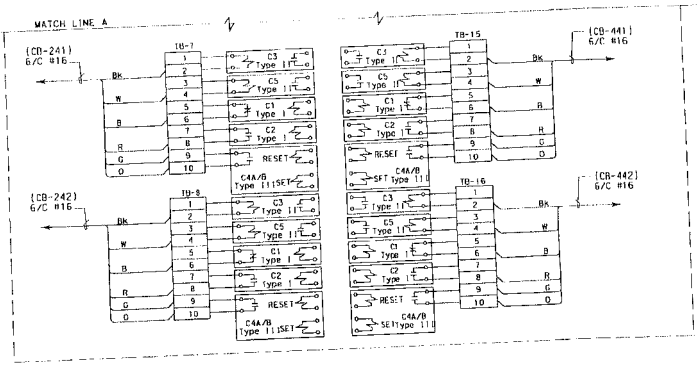

FOR REFERENCE ONLY

DIST	COUNTY	ROUTE	TOTAL PROJECT
04	SF	80	

Carol Light 04/15/08
REGISTERED ELECTRICAL ENGINEER DATE

PLANS APPROVAL DATE

REGISTERED PROFESSIONAL ENGINEER CAROL LIGHT No. 10145 Exp. 09/30/08 ELECTRICAL STATE OF CALIFORNIA

PB Americas, Inc.
303 Second St., Suite 700N
San Francisco, CA 94107-1317

SILVERMAN & LIGHT
1201 PARK AVENUE - SUITE 100
EMERYVILLE, CA 94608-3632

The State of California or its officers or agents shall not be responsible for the accuracy or completeness of electronic copies of this plan sheet.

Caltrans now has a web site! To get to the web site, go to http://www.dot.ca.gov

SHEET NOTES:

(1) For connection diagram to relocated RTU-8, see sheet E-18.

NOTES:

1. References:
   - For relay configuration, see sheet E-22.
2. For other related work not shown on this sheet, see Electrical Special Provisions.

DETAILS
RTU #8 ELEMENTARY CONNECTION DIAGRAM
TEMPORARY BYPASS STRUCTURE-EAST TIE IN

NO SCALE

E-21

DGN FILE => t:\13103\southdetour\cco eti-1\transmit\cco submittal 20080502\roadway\4120r4ue21.dgn
USERNAME => reyest

CU 04251 EA 0120R4

DATE PLOTTED => 5/2/2008
TIME PLOTTED => 4:23:35 PM

00-00-00

STATE OF CALIFORNIA - DEPARTMENT OF TRANSPORTATION

Caltrans

DESIGN OVERSIGHT: HONG WONG

CALCULATED/DESIGNED BY: BJ DATE REVISED BY
CHECKED BY: CL DATE REVISED

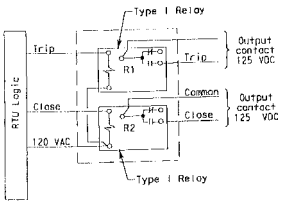

TYPE A
(For Breaker Control)
Relays with 2PDT 10 A rated contacts, Coil-120 VAC

Relay R1 Momentary contact (close to trip breaker)
Relay R2 Momentary contact (close to close breaker)

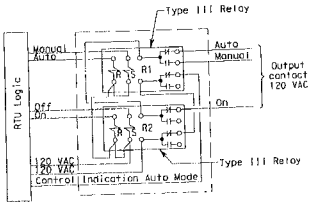

TYPE B
(For Lighting Control)
Relays with 2PDT 10 A rated contacts, Coil-120 VAC

Relay R1 Energized (Manual mode)
Relay R1 De-energized (Auto mode)
Relay R2 Energized (Off mode)
Relay R2 De-energized (On mode)

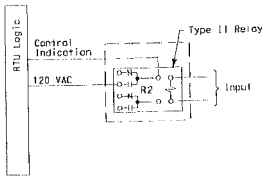

TYPE D

Typical indication interposing Relay
Coil-120 VAC

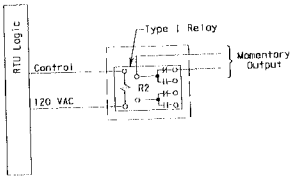

TYPE E

Typical Control interposing Relay
Coil-120 VAC

Caltrans Metric

04	SF	80			

REGISTERED ELECTRICAL ENGINEER — DATE 04/15/08

PLANS APPROVAL DATE

REGISTERED PROFESSIONAL ENGINEER — CAROL LIGHT — No. 10145 — Exp. 09/30/08 — ELECTRICAL — STATE OF CALIFORNIA

PB Americas, Inc.
303 Second St., Suite 700N
San Francisco, CA 94107-1317

SILVERMAN & LIGHT
1201 PARK AVENUE - SUITE 100
EMERYVILLE, CA 94608-3632

The State of California or its officers or agents shall not be responsible for the accuracy or completeness of electronic copies of this plan sheet.

Caltrans now has a web site! To get to the web site, go to http://www.dot.ca.gov

RELAY TYPE DESCRIPTION

TYPE I	General purpose relay, Coil : 120 VAC Contacts: Double pole, double throw, 10 A rated
TYPE II	General purpose relay, Coil : 120 VAC Contacts: Double pole, double throw, 10 A rated
TYPE III	Latching purpose relay, Coil : 120 VAC Contacts: Double pole, double throw, 10 A rated
TYPE IV	General purpose relay, Coil : 120 VAC
TYPE V	Timing relay, on delay, Coil : 120 VAC Contacts: Double pole, double throw, 10 A rated

TYPE I

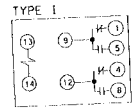

TYPE II

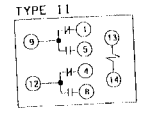

TYPE III

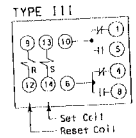

CONTRACT NO. 04-0120R4

CONTRACT CHANGE ORDER NO 134

SHEET 89 OF 94

MARK	DATE	DESCRIPTIONS	BY	CH'D	CCOR
		REVISIONS			

CONTRACT CHANGE ORDER NO. _____
SHEET ____ OF ____

DETAILS
TYPICAL RELAY WIRING DIAGRAM
TEMPORARY BYPASS STRUCTURE-EAST TIE IN
NO SCALE

E-22

STATE OF CALIFORNIA - DEPARTMENT OF TRANSPORTATION
Caltrans

DESIGN OVERSIGHT: HONG WONG
CALCULATED/DESIGNED BY: BJ
CHECKED BY: CL
DATE REVISED BY
DATE REVISED

THIS PLAN ACCURATE FOR ELECTRICAL WORK ONLY

FOR REDUCED PLANS ORIGINAL SCALE IS IN MILLIMETERS 0 20 40 60 80

DGN FILE => t:\13103\southdetour\cco eti-1\transmit\cco submittal 20080502\roadway\4120r4u022.dgn
USERNAME => reyesl
CU 04251
EA 0120R4

DATE PLOTTED => 5/2/2008
TIME PLOTTED => 4:23:47 PM
00-00-00

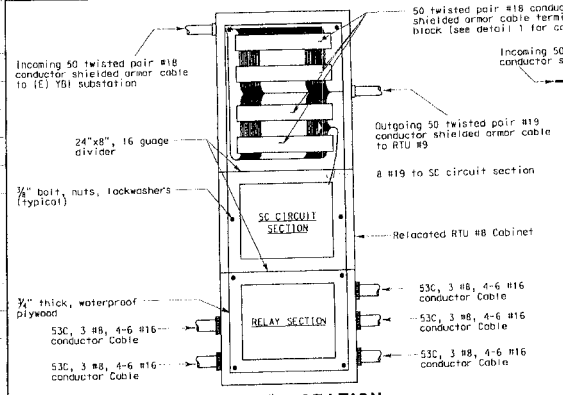

(E) RTU #8 STATION

NO SCALE

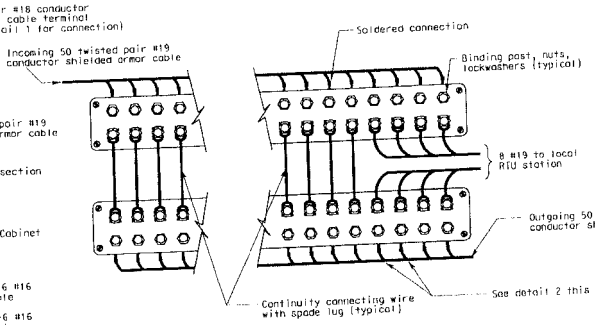

TYPICAL DETAIL 1

NO SCALE

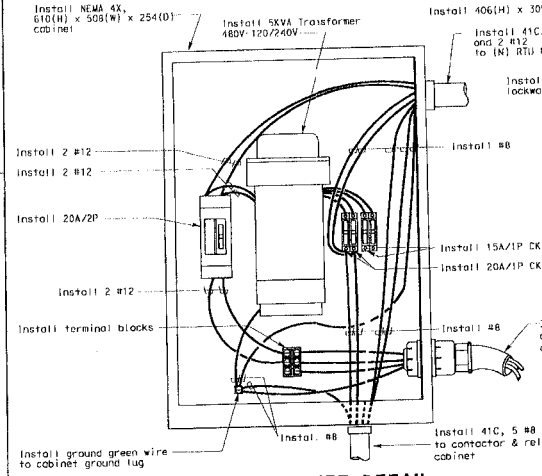

SERVICE CABINET DETAIL

NO SCALE
(Front door not shown)

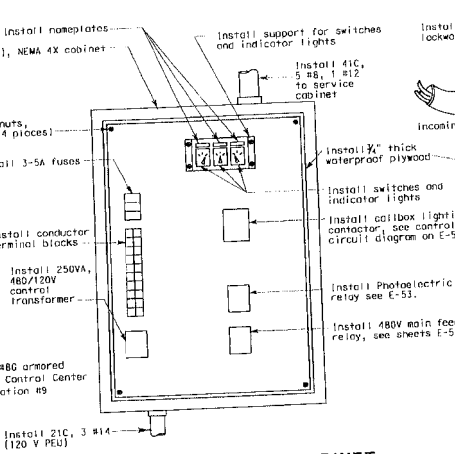

CONTACTOR & RELAY CABINET

NO SCALE
(Front door not shown)

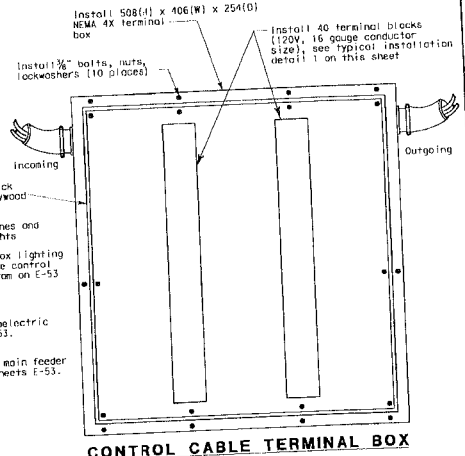

CONTROL CABLE TERMINAL BOX

NO SCALE
(Cover plate not shown)

DETAILS
RTU #8 STATION TERMINAL CABINETS TEMPORARY BYPASS STRUCTURE- EAST TIE IN

NO SCALE

E-23

ALL DIMENSIONS ARE IN MILLIMETERS UNLESS OTHERWISE SHOWN

THIS PLAN ACCURATE FOR ELECTRICAL WORK ONLY

FOR REDUCED PLANS ORIGINAL SCALE IS IN MILLIMETERS 0 20 40 60 80

DGN FILE => E:\13103\southbatour\cco etl-1\bridgelt\cco sub01.tpl 20080502\roadway\4120r4up23.dgn
USERNAME => reyesl

CU 04251 | EA 0120R4

Caltrans Metric

04 | SF | 80

Carl Light 04/15/08
REGISTERED ELECTRICAL ENGINEER DATE

CARL LIGHT No. 10145 Exp. 09/30/08 ELECTRICAL STATE OF CALIFORNIA

PLANS APPROVAL DATE

PB Americas, Inc.
303 Second St., Suite 700N
San Francisco, CA 94107-1317

SILVERMAN & LIGHT
1201 PARK AVENUE - SUITE 100
EMERYVILLE, CA 94608-3632

The State of California or its officers or agents shall not be responsible for the accuracy or completeness of electronic copies of this plan sheet.

Caltrans now has a web site! To get to the web site, go to http://www.dot.ca.gov

MARK	DATE	DESCRIPTIONS REVISIONS	BY	CH'D

CONTRACT CHANGE ORDER NO. 134
SHEET 90 OF 94

STATE OF CALIFORNIA - DEPARTMENT OF TRANSPORTATION
Caltrans
DESIGN OVERSIGHT: HONG WONG
CALCULATED/DESIGNED BY:
CHECKED BY:
DATE REVISED BY:
DATE REVISED:

DATE PLOTTED => 5/2/2008
TIME PLOTTED => 4:21:58 PM
LOS BANOS 00-00-00

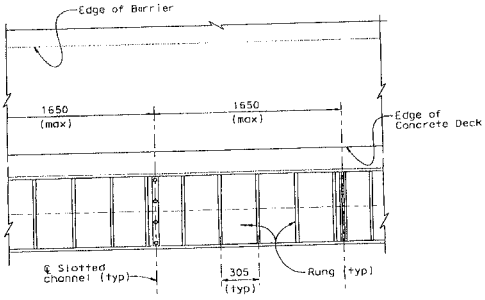

PLAN
1:15

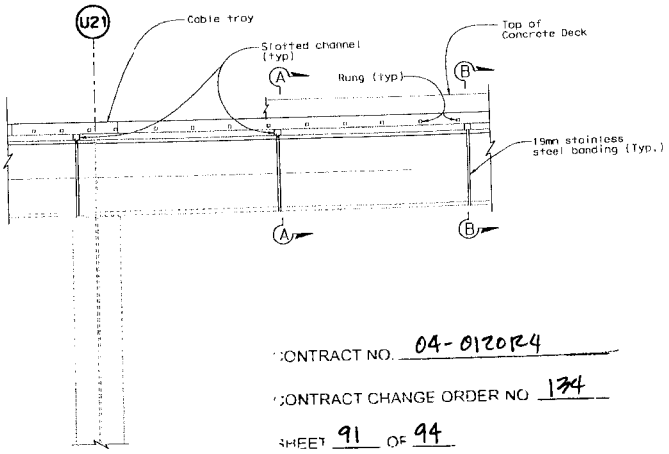

ELEVATION
1:15

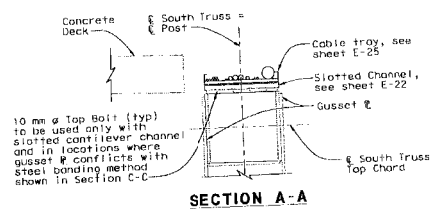

SECTION A-A
1:15

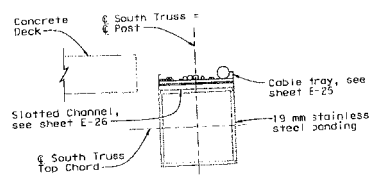

SECTION B-B
1:15

CONTRACT NO. 04-0120R4

CONTRACT CHANGE ORDER NO 134

SHEET 91 OF 94

DETAILS
CABLE TRAY MOUNTING
TEMPORARY BYPASS STRUCTURE- EAST TIE IN
SCALE AS NOTED

E-24

Caltrans Metric

DIST	COUNTY		TOTAL SHEETS
04	SF	80	

Carol Light 04/15/08
REGISTERED ELECTRICAL ENGINEER DATE

PLANS APPROVAL DATE

REGISTERED PROFESSIONAL ENGINEER CAROL LIGHT No. 10145 Exp. 09/30/08 ELECTRICAL STATE OF CALIFORNIA

PB Americas, Inc.
303 Second St., Suite 700N
San Francisco, CA 94107-1317

SILVERMAN & LIGHT
1201 PARK AVENUE - SUITE 100
EMERYVILLE, CA 94608-3632

The State of California or its officers or agents shall not be responsible for the accuracy or completeness of electronic copies of this plan sheet.

Caltrans now has a web site! To get to the web site, go to http://www.dot.ca.gov

MARK	DATE	DESCRIPTIONS	BY	CH'D	CCOM
		REVISIONS			

CONTRACT CHANGE ORDER NO.
SHEET ____ OF ____

STATE OF CALIFORNIA - DEPARTMENT OF TRANSPORTATION
Caltrans

DESIGN OVERSIGHT: HONG WONG
CALCULATED/DESIGNED BY: BJ
CHECKED BY: CL
DATE REVISED BY
DATE REVISED

THIS PLAN ACCURATE FOR ELECTRICAL WORK ONLY

FOR REDUCED PLANS ORIGINAL SCALE IS IN MILLIMETERS 0 20 40 60 80

DGN FILE => t:\13103\southdetour\cco eli-1\transmit\cco submi
USERNAME => reyesl

tel 20080502\roadway\4120r4u424.dgn
CU 04251
EA 0120R4

00-00-00 DATE PLOTTED => 5/2/2008 TIME PLOTTED => 4:24:11 PM

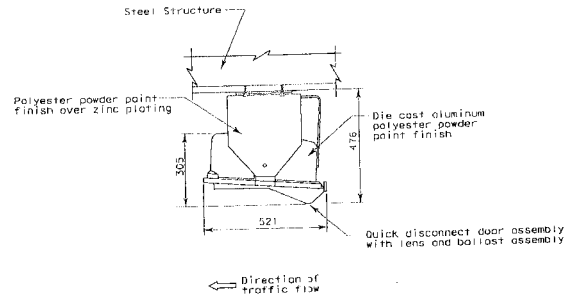

EASTBOUND SOFFIT LUMINAIRE MOUNTING DETAIL

SCALE: NONE

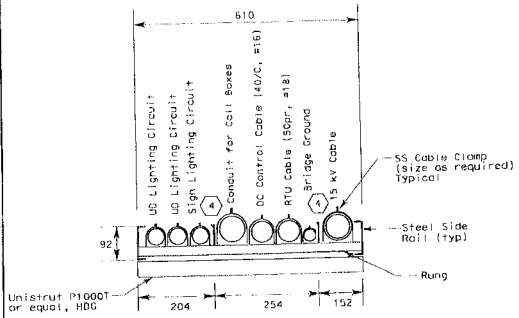

CABLE TRAY LAYOUT

SCALE: 1:5

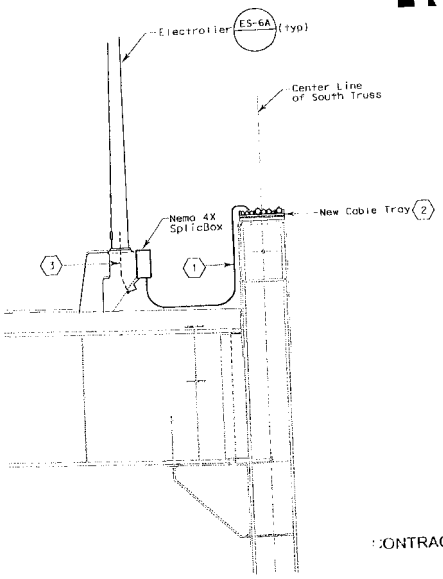

SECTION AT BENT 52A

SCALE: NONE

Notes:

1. The Contractor is to verify all controlling field dimensions before ordering or fabricating any material.
2. Fabricate bracket clips and brace from A36 steel grind sharp edges, hot dip galvanized.
3. See Structural plans for additional mounting detail and specifications.

SHEET NOTES:

1. Route lighting circuits in cable tray. Provide pull boxes and activation at electroliers as needed per standard specifications. See plan views for electrolier and pull box locations.
2. Route remaining cables in cable tray. Secure to top of structural post or cantilever from bottom of girder. Provide and install pull boxes and termination boxes as shown and as needed by field conditions. See Detail on this sheet and sheet E-4A.
3. Install 27C conduit from center of pole base to bottom of barrier electrolier support. Install 27C conduit with conductors and drip loop to junction box containing fused splice connectors.
4. Install cable tray barriers to create separation between 12 kV, 600 V and control cables. Barriers and accessories to be by same manufacturer as tray system.

Caltrans Metric

04 | SI | 80

Carol Light 04/15/08
REGISTERED ELECTRICAL ENGINEER DATE

PLANS APPROVAL DATE

REGISTERED PROFESSIONAL ENGINEER CAROL LIGHT No. 10145 Exp. 09/30/08 ELECTRICAL STATE OF CALIFORNIA

PB Americas, Inc.
303 Second St., Suite 700N
San Francisco, CA 94107-1317

SILVERMAN & LIGHT
1201 PARK AVENUE - SUITE 100
EMERYVILLE, CA 94608-3632

The State of California or its officers or agents shall not be responsible for the accuracy or completeness of electronic copies of this plan sheet.

Caltrans now has a web site! To get to the web site, go to http://www.dot.ca.gov

CONTRACT NO. 04-0120R4

CONTRACT CHANGE ORDER NO 134

SHEET 92 OF 94

MARK	DATE	DESCRIPTIONS	BY	CH'D	CCOR
		REVISIONS			

CONTRACT CHANGE ORDER NO. ____
SHEET ____ OF ____

DETAILS
TEMPORARY LIGHTING
TEMPORARY BYPASS STRUCTURE-EAST TIE IN

SCALE AS NOTED

E-25

ALL DIMENSIONS ARE IN MILLIMETERS UNLESS OTHERWISE SHOWN

THIS PLAN ACCURATE FOR ELECTRICAL WORK ONLY

FOR REDUCED PLANS ORIGINAL SCALE IS IN MILLIMETERS 0 20 40 60 80

DGN FILE => f:\13103\southdetour\cco eti-1\transmit\cco submittal 20080502\roadway\4120r4ug25.dgn
USERNAME => reyosl

CU 04251 EA 0120R4

DATE PLOTTED => 5/2/2008
TIME PLOTTED => 4:24:22 PM

00-00-00

STATE OF CALIFORNIA - DEPARTMENT OF TRANSPORTATION
Caltrans

DESIGN OVERSIGHT: HONG WONG
CALCULATED/DESIGNED BY: BJ
CHECKED BY: CL
DATE REVISED BY
DATE REVISED

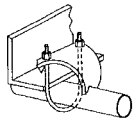

Conduit at right angles to the beam

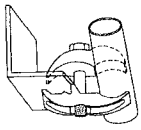

Conduit parallel to the beam

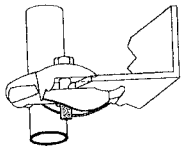

For mounting pipe or conduit vertically across beam edge

CONDUIT MOUNTING DETAILS

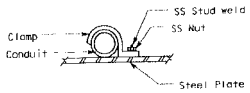

CONDUIT/CABLE MOUNTING DETAIL

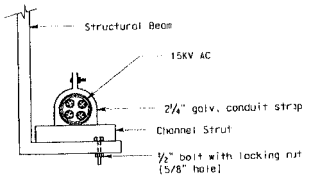

MOUNTING DETAIL FOR 15 KV AC UPPER DECK-SOUTHSIDE

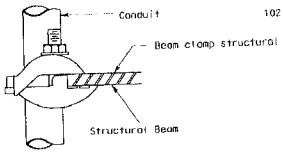

TYPICAL CONDUIT CLAMP MOUNTING

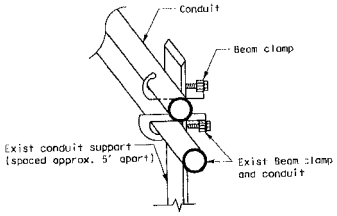

TYPICAL CONDUIT MOUNTING ON METAL STICK

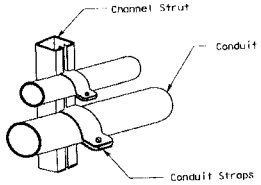

TYPICAL CONDUIT MOUNTING ON STRUT

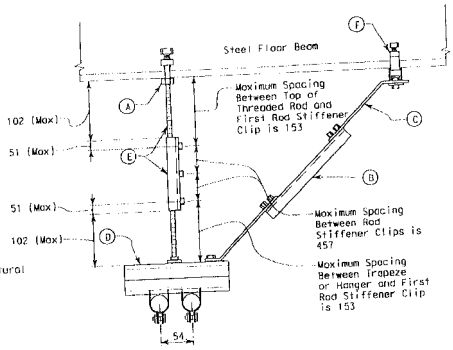

TYPICAL DETAIL

ARMORED CABLE MOUNTING DETAIL
BELOW LOWER DECK
NO SCALE

MATERIAL LIST	
Item No.	Description
(A)	Beam C-Clamp with Locknut and Set Screw
(B)	Strut transverse brace for seismic support
(C)	Hinged seismic bracket with retaining clip
(D)	Strut channel, 41 mm x 82 mm
(E)	Threaded rod (13 mm) with stiffener & stiffener clips
(F)	C-Clamp with Locknut

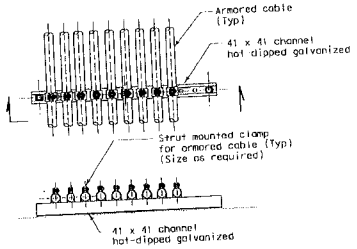

SECTION

TYPICAL DETAIL

ARMORED CABLE MOUNTING DETAIL
NO SCALE

CONTRACT NO. 04-0120R4

CONTRACT CHANGE ORDER NO. 134

SHEET 93 OF 94

MARK	DATE	DESCRIPTIONS REVISIONS	BY	CH'D

CONTRACT CHANGE ORDER NO. ____
SHEET ____ OF ____

DETAILS
TYPICAL CONDUIT/CABLE SUPPORTS TEMPORARY BYPASS STRUCTURE-EAST TIE IN

NO SCALE

E-26

Caltrans Metric

04 | SF | 80

Carol Light 04/15/08
REGISTERED ELECTRICAL ENGINEER DATE

CAROL LIGHT No. 10145 Exp. 09/30/08 ELECTRICAL STATE OF CALIFORNIA

PLANS APPROVAL DATE

PB Americas, Inc.
303 Second St., Suite 700N
San Francisco, CA 94107-1317

SILVERMAN & LIGHT
1201 PARK AVENUE - SUITE 100
EMERYVILLE, CA 94608-3632

The State of California or its officers or agents shall not be responsible for the accuracy or completeness of electronic copies of this plan sheet.

Caltrans now has a web site! To get to the web site, go to http://www.dot.ca.gov

STATE OF CALIFORNIA - DEPARTMENT OF TRANSPORTATION
DESIGN OVERSIGHT: HONG WONG
CALCULATED/DESIGNED BY: BJ | CL
CHECKED BY:
DATE REVISED | REVISED BY | DATE

THIS PLAN ACCURATE FOR ELECTRICAL WORK ONLY
FOR REDUCED PLANS ORIGINAL SCALE IS IN MILLIMETERS
0 20 40 60 80

DGN FILE => I:\d03\southdeltour\cco eri-1\transmit\cco subm1\tol 20080502\roadway\4120r4sht26.dgn
USERNAME => rayes1

DATE PLOTTED => 5/2/2008
TIME PLOTTED => 4:24:37 PM

REGISTERED PROFESSIONAL ENGINEER

00-00-00

CU 04251 | EA 0120R4

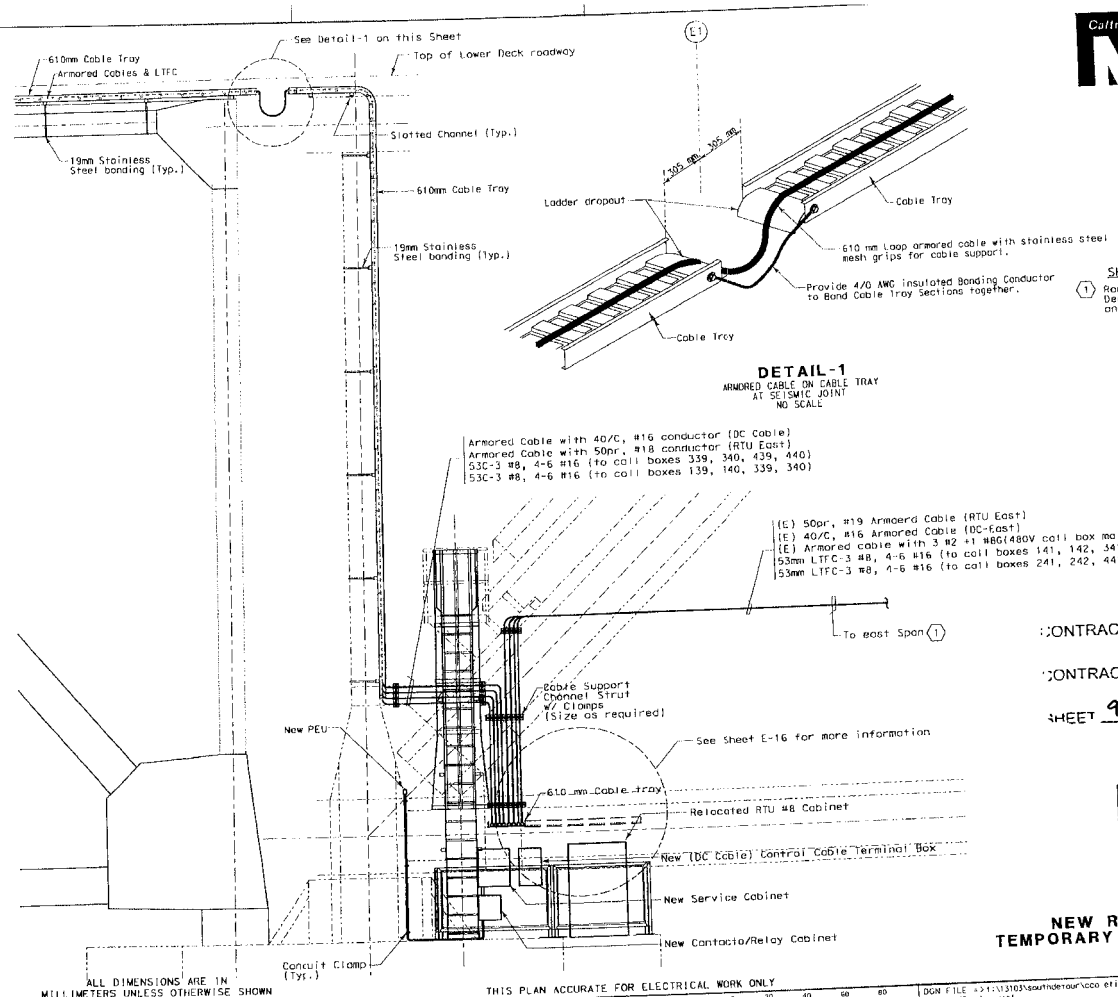

DETAIL-1
ARMORED CABLE ON CABLE TRAY AT SEISMIC JOINT
NO SCALE

SHEET NOTES

1. Route all Armored Cables on top of existing Lower Deck railing. Secure all cables with cable clamps and strut every 1.5 meters interval.

Caltrans Metric

04 | SF | 80

Carol Light — 04/15/08
REGISTERED ELECTRICAL ENGINEER — DATE

PLANS APPROVAL DATE

CAROL LIGHT — No. 10145 — Exp. 09/30/08 — ELECTRICAL — STATE OF CALIFORNIA

PB Americas, Inc.
303 Second St., Suite 700N
San Francisco, CA 94107-1317

SILVERMAN & LIGHT
120 PARK AVENUE - SUITE 100
EMERYVILLE, CA 94608-3632

The State of California or its officers or agents shall not be responsible for the accuracy or completeness of electronic copies of this plan sheet.

Caltrans now has a web site! To get to the web site, go to http://www.dot.ca.gov

CONTRACT NO. 04-0120R4

CONTRACT CHANGE ORDER NO. 134

SHEET 94 OF 94

MARK	DATE	DESCRIPTIONS / REVISIONS	BY	CH'D	CCOR

CONTRACT CHANGE ORDER NO. _____
SHEET ____ OF ____

DETAILS
NEW RTU #8 STATION ON PIER E1
TEMPORARY BYPASS STRUCTURE-EAST TIE IN

SCALE: 1:30

E-27

STATE OF CALIFORNIA - DEPARTMENT OF TRANSPORTATION — Caltrans
DESIGN OVERSIGHT — HONG MONG
CALCULATED/DESIGNED BY — BJ
CHECKED BY — CL
DATE — REVISED BY — DATE REVISED

ALL DIMENSIONS ARE IN MILLIMETERS UNLESS OTHERWISE SHOWN

THIS PLAN ACCURATE FOR ELECTRICAL WORK ONLY

FOR REDUCED PLANS ORIGINAL SCALE IS IN MILLIMETERS — 0 20 40 60 80

DGN FILE => T:\13103\southtendour\cco elt-1\troseb11\cco subset
USERNAME => rryest
tgl 20080502\roadway\4120r4w02.dgn
CU 04251 | EA 0120R4

DATE PLOTTED => 5/2/2008
TIME PLOTTED => 4:24:55 PM

STATE OF CALIFORNIA - DEPARTMENT OF TRANSPORTATION

CONTRACT CHANGE ORDER MEMORANDUM

TO: MIKE FORNER / DEANNA VILCHECK	FILE: E.A. 04 - 0120R4
	CO-RTE-PM SF-80-12.6/13.2
FROM: BILL CASEY	FED. NO. ACBRIM-080-1(097)N
CCO#: **134** SUPPLEMENT#: **0** Category Code: **CHPC**	CONTINGENCY BALANCE (incl. this change) **$58,997,845.55**
COST: **$2,300,924.00** INCREASE ☑ DECREASE ☐	HEADQUARTERS APPROVAL REQUIRED? ☑ YES ☐ NO
SUPPLEMENTAL FUNDS PROVIDED: **$0.00**	IS THIS REQUEST IN ACCORDANCE WITH ENVIRONMENTAL DOCUMENTS? ☑ YES ☐ NO
CCO DESCRIPTION: Project Wide Electrical Changes	**PROJECT DESCRIPTION:** CONSTRUCT ROUTE 80 TEMP BYPASS STRUCTURE

Original Contract Time:	Time Adj. This Change:	Previously Approved CCO Time Adjustments:	Percentage Time Adjusted: (including this change)	Total # of Unreconciled Deferred Time CCO(s): (including this change)
475 Day(s)	**0** Day(s)	**1195** Day(s)	**252** %	**7**

THIS CHANGE ORDER PROVIDES FOR:

Performing all electrical work as shown on Sheets 1 to 94 of the change order.

This project, the Yerba Buena Island Detour (YBID), was awarded in March 2004 to construct a detour that will allow for the tie in of the new east span of the San Francisco Oakland Bay Bridge to Yerba Buena Island. The YBID encompasses three main structures, the East Tie-In to the existing bridge, the West Tie-In (WTI) to Yerba Buena Island, and the Viaduct structure between the two tie ins.

Two separate Department strategy memorandums, dated December 14, 2006 and December 25, 2006, approved by Tony Anziano - Toll Bridge Program Manager and Richard Land - Chief Engineer, recommended that the Department assume responsibility for the designs of the East Tie-In (ETI) and West Tie-In (WTI) portions of this contract, and incorporated seismic retrofit work of the permanent Yerba Buena Island Transition Structure (YBITS) onto this project. The approval of these strategy memorandums extended the project completion date approximately 5 years.

Because of the approved strategy memorandums, the Department assumed responsibility for the electrical design and issued revised electrical plans for the YBID. Consequently, the original scope of work has been changed and this change order provides for the elimination of Contract Bid Item No. 78, Electrical Work (Stage 2) as this work is no longer necessary.

Due to the extent of the electrical changes to the YBID and the 5 year delay that has been incurred on the project, the original contract bid item shall be eliminated and an agreed lump sum price shall be paid for the work.

Contract Bid Item No. 78 Electrical Work (Stage 2), in the amount of $1,000,000.00 will be deleted from the contract. The Contractor will be compensated for the Department's revised electrical work at an agreed lump sum of $3,300,924.00. The net change order cost of $2,300,924.00 shall be financed from the projects contingency funds. A cost analysis for this agreed lump sum is on file in the project records.

No adjustment of contract time is warranted, as the work will not affect the controlling operation.

Alec Melkonians - Toll Bridge Project Manager, Hong Wong - Project Engineer, and Lina Ellis - Maintenance, concurred with this change. The TBPOC provided approval for this change on May 7, 2009.

RECEIVED
OCT 12 2009

ADA Notice: For individuals with sensory disabilities, this document is available in alternate formats. For information call: (916) 654-6410 or TDD (916) 654-3880 or write Records and Forms Management, 1120 N Street, MS-89, Sacramento, CA 95814.

CONCURRED BY:			
Construction Engineer:	Jeannie Balderramos	Date	7-3-09
Bridge Engineer:		Date	
Project Engineer:	Hong Wong, PE	Date	3/17/09
Project Manager:	Alec Melkonians	Date	3/18/09
FHWA Rep.:		Date	
Environmental:		Date	
Other (specify):	Lina Ellis - Maintenance	Date	7-15-09
Other (specify):		Date	
District Prior Approval By:		Date	
HQ (Issue Approve) By:	Bob Molera, HQ CCO Engineer	Date	7/7/09
Resident Engineer's Signature:		Date	
			7-3-09

ESTIMATE OF COST

	THIS REQUEST	TOTAL TO DATE
ITEMS	($1,000,000.00)	($1,000,000.00)
FORCE ACCOUNT	$0.00	$0.00
AGREED PRICE	$3,300,924.00	$3,300,924.00
ADJUSTMENT	$0.00	$0.00
TOTAL	$2,300,924.00	$2,300,924.00

FEDERAL PARTICIPATION

☐ PARTICIPATING ☐ PARTICIPATING IN PART ☑ NONE
☐ NON-PARTICIPATING (MAINTENANCE) ☐ NON-PARTICIPATING

FEDERAL SEGREGATION (if more than one Funding Source or P.I.P. type)
☐ CCO FUNDED PER CONTRACT ☐ CCO FUNDED AS FOLLOWS

FEDERAL FUNDING SOURCE	PERCENT

ADA Notice: For individuals with sensory disabilities, this document is available in alternate formats. For information call: (916) 654-6410 or TDD (916) 654-3880 or write Records and Forms Management, 1120 N Street, MS-89, Sacramento, CA 95814.

STATE OF CALIFORNIA - DEPARTMENT OF TRANSPORTATION

CONTRACT CHANGE ORDER

Change Requested by: Engineer

CCO 135	Suppl. No. 0	Contract No. 04 - 0120R4	Road SF-80-12.6/13.2	FED. AID LOC.: ACBRIM-080-1(097)N

To: CC MYERS INC

You are directed to make the following changes from the plans and specifications or do the following described work not included in the plans and specifications for this contract. ***NOTE: This change order is not effective until approved by the Engineer.***

Description of work to be done, estimate of quantities and prices to be paid. (Segregate between additional work at contract price, agreed price and force account.) Unless otherwise stated, rates for rental of equipment cover only such time as equipment is actually used and no allowance will be made for idle time. This last percentage shown is the net accumulated increase or decrease from the original quantity in the Engineer's Estimate.

Adjustment of Compensation at Lump Sum:

In accordance with Section 4-1.03 "Changes" of the contract Standard Specifications, provide compensation to the contractor for additional bar reinforcing steel costs for the Viaduct deck and barrier rail to be incurred by the Contractor's subcontractor Harris Salinas Rebar, Inc. (HSR) due to all the schedule changes and design enhancements by the Department to the steel Viaduct of the Temporary Bypass Structure (Bridge No. 34-0006 (TEMP)) that were incorporated into Imbsen & Associates Inc. approved "Final Superstructure Resubmittal" Viaduct plans (Sheets 1 through 112) dated July 19, 2007.

For this work, the Contractor will be compensated $995,100.00. This lump sum constitutes full compensation for all additional costs to be incurred by HSR, including all markups, due to all the schedule changes and design enhancements by the Department to the work concerning the Viaduct structure for furnishing all labor, material, tools, equipment, and incidentals for doing the work involved in this change.

Escalation costs associated with the Contractor's support of HSR's installation of the deck and barrier reinforcing steel for the Viaduct have not been addressed by this change order and shall remain outstanding.

Total Cost of Adjustment of Compensation at Lump Sum $995,100.00

Estimated Cost: Increase ☑ Decrease ☐ **$995,100.00**

By reason of this order the time of completion will be adjusted as follows: Deferred

Submitted by

Signature	Resident Engineer	Date
	BILL CASEY	11-13-08

Approval Recommended by

Signature	Area Construction Manager	Date
Deanna Vilcheck	DEANNA VILCHECK	11/13/08

Engineer Approval by

Signature	Area Construction Manager	Date
Deanna Vilcheck	DEANNA VILCHECK	12/30/08

We the undersigned contractor, have given careful consideration to the change proposed and agree, if this proposal is approved, that we will provide all equipment, furnish the materials, except as may otherwise be noted above, and perform all services necessary for the work above specified, and will accept as full payment therefor the prices shown above.

NOTE: If you, the contractor, do not sign acceptance of this order, your attention is directed to the requirements of the specifications as to proceeding with the ordered work and filing a written protest within the time therein specified.

Contractor Acceptance by

Signature	(Print name and title)	Date
	DANIEL E. HIMICK, PRESIDENT	12/10/08

CONTRACT CHANGE ORDER

Change Requested by: Engineer

CCO 136	Suppl. No. 0	Contract No. 04 - 0120R4	Road SF-80-12.6/13.2	FED. AID LOC.: ACBRIM-080-1(097)N

To: CC MYERS INC

You are directed to make the following changes from the plans and specifications or do the following described work not included in the plans and specifications for this contract. ***NOTE: This change order is not effective until approved by the Engineer.***

Description of work to be done, estimate of quantities and prices to be paid. (Segregate between additional work at contract price, agreed price and force account.) Unless otherwise stated, rates for rental of equipment cover only such time as equipment is actually used and no allowance will be made for idle time. This last percentage shown is the net accumulated increase or decrease from the original quantity in the Engineer's Estimate.

As authorized by the Engineer, provide additional access for the United States Coast Guard.

Extra Work at Force Account:

Construct a temporary dirt road to facilitate the additional access for the United States Coast Guard use.

Estimated Cost of Extra Work at Force Account $50,000.00

Extra Work at Lump Sum:

Furnish and install three (3) 8' x 24' chain link gates and relocate one (1) existing 4' chain link gate along the United States Coast Guard perimeter fence line adjacent to the temporary USCG access road.

For this work, the Contractor shall be compensated at a lump sum of $ 24,540.00, which constitutes full compensation, including all markups, for all costs associated with the work of this change.

Total Cost of Extra Work at Agreed Lump Sum $24,540.00

Estimated Cost: Increase ☑ Decrease ☐ **$74,540.00**

By reason of this order the time of completion will be adjusted as follows: 0 days

Submitted by

Signature	Resident Engineer	Date
	BILL CASEY	8-18-08

Approval Recommended by

Signature	Area Construction Manager	Date
Deanna Vilcheck	DEANNA VILCHECK	8/25/08

Engineer Approval by

Signature	Area Construction Manager	Date
	DEANNA VILCHECK	

We the undersigned contractor, have given careful consideration to the change proposed and agree, if this proposal is approved, that we will provide all equipment, furnish the materials, except as may otherwise be noted above, and perform all services necessary for the work above specified, and will accept as full payment therefor the prices shown above.

NOTE: **If you, the contractor, do not sign acceptance of this order, your attention is directed to the requirements of the specifications as to proceeding with the ordered work and filing a written protest within the time therein specified.**

Contractor Acceptance by

Signature	(Print name and title)	Date

STATE OF CALIFORNIA - DEPARTMENT OF TRANSPORTATION

CONTRACT CHANGE ORDER

Change Requested by: Engineer

CCO 136	Suppl. No. 1	Contract No. 04 - 0120R4	Road SF-80-12.6/13.2	FED. AID LOC.: ACBRIM-080-1(097)N

To: CC MYERS INC

You are directed to make the following changes from the plans and specifications or do the following described work not included in the plans and specifications for this contract. ***NOTE: This change order is not effective until approved by the Engineer.***

Description of work to be done, estimate of quantities and prices to be paid. (Segregate between additional work at contract price, agreed price and force account.) Unless otherwise stated, rates for rental of equipment cover only such time as equipment is actually used and no allowance will be made for idle time. This last percentage shown is the net accumulated increase or decrease from the original quantity in the Engineer's Estimate.

Extra Work at Force Account:

Provide additional funds for the construction of temporary access road for USCG personnel.

Estimated cost of Extra Work at Force Account $100,000.00

Estimated Cost: **Increase** ☑ **Decrease** ☐ **$100,000.00**

By reason of this order the time of completion will be adjusted as follows: 0 days

Submitted by

Signature	Resident Engineer	Date
	BILL CASEY	12-16-08

Approval Recommended by

Signature	Area Construction Manager	Date
Deanna Vilcheck	DEANNA VILCHECK	12/17/08

Engineer Approval by

Signature	Area Construction Manager	Date
Deanna Vilcheck	DEANNA VILCHECK	12/17/08

We the undersigned contractor, have given careful consideration to the change proposed and agree, if this proposal is approved, that we will provide all equipment, furnish the materials, except as may otherwise be noted above, and perform all services necessary for the work above specified, and will accept as full payment therefor the prices shown above.

NOTE: If you, the contractor, do not sign acceptance of this order, your attention is directed to the requirements of the specifications as to proceeding with the ordered work and filing a written protest within the time therein specified.

Contractor Acceptance by

Signature	(Print name and title)	Date
NOT APPLICABLE		

CONTRACT CHANGE ORDER

Change Requested by: Engineer

CCO 136	Suppl. No. 2	Contract No. 04 - 0120R4	Road SF-80-12.6/13.2	FED. AID LOC.: ACBRIM-080-1(097)N

To: **CC MYERS INC**

You are directed to make the following changes from the plans and specifications or do the following described work not included in the plans and specifications for this contract. ***NOTE: This change order is not effective until approved by the Engineer.***

Description of work to be done, estimate of quantities and prices to be paid. (Segregate between additional work at contract price, agreed price and force account.) Unless otherwise stated, rates for rental of equipment cover only such time as equipment is actually used and no allowance will be made for idle time. This last percentage shown is the net accumulated increase or decrease from the original quantity in the Engineer's Estimate.

Extra Work at Force Account:

Provide additional funds.

Estimated Cost of Extra Work at Force Account $400,000.00

RECEIVED
010216 MAY -7 09

Estimated Cost: Increase ☑ Decrease ☐ **$400,000.00**

By reason of this order the time of completion will be adjusted as follows: 0 days

Submitted by

Signature	Resident Engineer	Date
[signature]	BILL CASEY	3-13-09

Approval Recommended by

Signature	Area Construction Manager	Date
Deanna Vilcheck	DEANNA VILCHECK	3/16/09

Engineer Approval by

Signature	Area Construction Manager	Date
Deanna Vilcheck	DEANNA VILCHECK	3/18/09

We the undersigned contractor, have given careful consideration to the change proposed and agree, if this proposal is approved, that we will provide all equipment, furnish the materials, except as may otherwise be noted above, and perform all services necessary for the work above specified, and will accept as full payment therefor the prices shown above.

NOTE: If you, the contractor, do not sign acceptance of this order, your attention is directed to the requirements of the specifications as to proceeding with the ordered work and filing a written protest within the time therein specified.

Contractor Acceptance by

Signature	(Print name and title)	Date
NOT APPLICABLE	N/A	N/A

STATE OF CALIFORNIA - DEPARTMENT OF TRANSPORTATION

CONTRACT CHANGE ORDER MEMORANDUM

DATE: 3/3/2009 Page 1 of 1

TO: MIKE FORNER / DEANNA VILCHECK	FILE: E.A. 04 - 0120R4
	CO-RTE-PM SF-80-12.6/13.2
FROM: BILL CASEY	FED. NO. ACBRIM-080-1(097)N
CCO#: 136 SUPPLEMENT#: 2 Category Code: CJXX	CONTINGENCY BALANCE (incl. this change) $70,823,345.05
COST: $400,000.00 INCREASE ☑ DECREASE ☐	HEADQUARTERS APPROVAL REQUIRED? ☑ YES ☐ NO
SUPPLEMENTAL FUNDS PROVIDED: $0.00	IS THIS REQUEST IN ACCORDANCE WITH ENVIRONMENTAL DOCUMENTS? ☑ YES ☐ NO
CCO DESCRIPTION: USCG Access Additional Funds	**PROJECT DESCRIPTION:** CONSTRUCT ROUTE 80 TEMP BYPASS STRUCTURE

Original Contract Time:	Time Adj. This Change:	Previously Approved CCO Time Adjustments:	Percentage Time Adjusted: (including this change)	Total # of Unreconciled Deferred Time CCO(s): (including this change)
475 Day(s)	0 Day(s)	0 Day(s)	0 %	0

THIS CHANGE ORDER PROVIDES FOR:

Provide additional funds for the construction of a temporary access road for USCG personnel.

The original contract change order calls for the construction of a temporary dirt road for the United States Coast Guard's (USCG) use, to provide and maintain a 24-hour a day, 7 days per week access on Macalla Road with no more than 15 minutes of blocked access per agreement between the Department and USCG, and to provide emergency access to the USCG facility in the event the main entrance becomes unavailable for any extended period of time.

A Supplemental No. 1 on the original CCO 136 in the amount of $100,000.00 (Extra Work @ Force Account) was executed to cover the work originally contemplated. However, all funds have been depleted and the Department anticipates additional work to be performed to include realigning the temporary access road due to advanced Yerba Buena Island Transitional Structure (YBITS) work at Bent W6R, realigning the USCG Command Circle Road that ties in to the temporary access road, and pavement improvements along Macalla Road for public access.

It is anticipated that additional funds of $400,000.00 will cover all the work as identified above, which can be financed from the project's contingency fund. A cost analysis is on file.

The Contractor's signature is not required for additional funds for Extra Work at Force Account change orders. Therefore this change order is being issued unilaterally.

There will be no time adjustment due to work of this change since the work involved does not affect the controlling operation.

This change was concurred by Alec Melkonians - Assistant Project Manager and concurred by Hong Wong - Project Engineer.

Maintenance concurrence is not required since it does not affect any permanent roadway features on this project.

CONCURRED BY:

Construction Engineer:		Date	
Bridge Engineer:		Date	
Project Engineer:	Hong Wong, PE	Date	3/3/09
Project Manager:	Alec Melkonians	Date	3/9/09
FHWA Rep.:		Date	
Environmental:		Date	
Other (specify):		Date	
Other (specify):		Date	
District Prior Approval By:		Date	
HQ (Issue Approve) By:	Bob Molera, HQ CCO Engineer	Date	3-17-09
Resident Engineer's Signature:		Date	3-13-09

ESTIMATE OF COST

	THIS REQUEST	TOTAL TO DATE
ITEMS	$0.00	$0.00
FORCE ACCOUNT	$400,000.00	$550,000.00
AGREED PRICE	$0.00	$24,540.00
ADJUSTMENT	$0.00	$0.00
TOTAL	$400,000.00	$574,540.00

FEDERAL PARTICIPATION

☐ PARTICIPATING ☐ PARTICIPATING IN PART ☑ NONE
☐ NON-PARTICIPATING (MAINTENANCE) ☐ NON-PARTICIPATING

FEDERAL SEGREGATION (if more than one Funding Source or P.I.P. type)
☐ CCO FUNDED PER CONTRACT ☐ CCO FUNDED AS FOLLOWS

FEDERAL FUNDING SOURCE	PERCENT

ADA Notice: For individuals with sensory disabilities, this document is available in alternate formats. For information call: (916) 654-6410 or TDD (916) 654-3880 or write Records and Forms Management, 1120 N Street, MS-89, Sacramento, CA 95814.

STATE OF CALIFORNIA - DEPARTMENT OF TRANSPORTATION

CONTRACT CHANGE ORDER

Change Requested by: Engineer

CCO 136	Suppl. No. 3	Contract No. 04 - 0120R4	Road SF-80-12.6/13.2	FED. AID LOC.:

To: CC MYERS INC

You are directed to make the following changes from the plans and specifications or do the following described work not included in the plans and specifications for this contract. ***NOTE: This change order is not effective until approved by the Engineer.***

Description of work to be done, estimate of quantities and prices to be paid. (Segregate between additional work at contract price, agreed price and force account.) Unless otherwise stated, rates for rental of equipment cover only such time as equipment is actually used and no allowance will be made for idle time. This last percentage shown is the net accumulated increase or decrease from the original quantity in the Engineer's Estimate.

Extra Work at Force Account:

Provide additional funds.

Estimated cost of Extra Work at Force Account $350,000.00

RECEIVED
SEP 23 09
01104.7

Estimated Cost: Increase ☑ Decrease ☐ **$350,000.00**

By reason of this order the time of completion will be adjusted as follows: 0 days

Submitted by

Signature	Resident Engineer BILL CASEY	Date 9-15-09

Approval Recommended by

Signature Deanna Vilcheck	Area Construction Manager DEANNA VILCHECK	Date 9/15/09

Engineer Approval by

Signature Deanna Vilcheck	Area Construction Manager DEANNA VILCHECK	Date 9/17/09

We the undersigned contractor, have given careful consideration to the change proposed and agree, if this proposal is approved, that we will provide all equipment, furnish the materials, except as may otherwise be noted above, and perform all services necessary for the work above specified, and will accept as full payment therefor the prices shown above.

NOTE: If you, the contractor, do not sign acceptance of this order, your attention is directed to the requirements of the specifications as to proceeding with the ordered work and filing a written protest within the time therein specified.

Contractor Acceptance by

Signature N/A	(Print name and title) N/A	Date N/A

STATE OF CALIFORNIA - DEPARTMENT OF TRANSPORTATION

CONTRACT CHANGE ORDER MEMORANDUM

DATE: 9/10/2009 Page 1 of 1

TO: MIKE FORNER / DEANNA VILCHECK	FILE: E.A. 04 - 0120R4
	CO-RTE-PM SF-80-12.6/13.2
FROM: BILL CASEY	FED. NO.
CCO#: 136 SUPPLEMENT#: 3 Category Code: CJXX	CONTINGENCY BALANCE (incl. this change) $55,250,420.59
COST: $350,000.00 INCREASE ☑ DECREASE ☐	HEADQUARTERS APPROVAL REQUIRED? ☑ YES ☐ NO
SUPPLEMENTAL FUNDS PROVIDED: $0.00	IS THIS REQUEST IN ACCORDANCE WITH ENVIRONMENTAL DOCUMENTS? ☑ YES ☐ NO
CCO DESCRIPTION: USCG Access - Addt'l Funds Request	**PROJECT DESCRIPTION:** CONSTRUCT ROUTE 80 TEMP BYPASS STRUCTURE

Original Contract Time:	Time Adj. This Change:	Previously Approved CCO Time Adjustments:	Percentage Time Adjusted: (including this change)	Total # of Unreconciled Deferred Time CCO(s): (including this change)
475 Day(s)	0 Day(s)	1195 Day(s)	252 %	7

THIS CHANGE ORDER PROVIDES FOR:

Provide additional funds for the construction of a temporary access road for USCG personnel.

The original contract change order calls for the construction of a temporary dirt road for the United States Coast Guard's (USCG) use, to provide and maintain a 24-hour a day, 7 days per week access on Macalla Road with no more than 15 minutes of blocked access per agreement between the Department and USCG, and to provide emergency access to the USCG facility in the event the main entrance becomes unavailable for any extended period of time.

A Supplemental No. 2 on the original CCO 136 in the amount of $400,000.00 (Extra Work @ Force Account) was executed to cover the work originally contemplated. However, all funds have been depleted and the Department need to pay all extra work bills on the holding file in the amount of $211,000.00.. In addition, this office anticipates additional workto upkeep the temporary access road.

It is anticipated that additional funds of $350,000.00 will cover all the work as identified above, which can be financed from the project's contingency fund. A cost analysis is on file.

The Contractor's signature is not required for additional funds request for Extra Work at Force Account change orders, therefore, this change order is being issued unilaterally.

Alec Melkonians, Asst. Project Manager, and Hong Wong, Project Engineer, both concurred on this change.

There will be no time adjustment due to work of this change since the work involved does not affect the controlling operation.

Maintenance concurrence is not required since it does not affect any permanent roadway features on this project.

CONCURRED BY:		
Construction Engineer:	BILL CASEY R.E.	Date 9-15-09
Bridge Engineer:		Date
Project Engineer:	Hong Wong, PE	Date 9/10/09
Project Manager:	Alec Melkonians	Date 9/10/09
FHWA Rep.:		Date
Environmental:		Date
Other (specify):		Date
Other (specify):		Date
District Prior Approval By:		Date
HQ (Issue Approve) By:	~~Bob Molera~~ LARRY SALHANEY	Date 9-17-09
Resident Engineer's Signature:		Date 9-15-09

ESTIMATE OF COST		
	THIS REQUEST	TOTAL TO DATE
ITEMS	$0.00	$0.00
FORCE ACCOUNT	$350,000.00	$900,000.00
AGREED PRICE	$0.00	$24,540.00
ADJUSTMENT	$0.00	$0.00
TOTAL	$350,000.00	$924,540.00

FEDERAL PARTICIPATION

☐ PARTICIPATING ☐ PARTICIPATING IN PART ☑ NONE
☐ NON-PARTICIPATING (MAINTENANCE) ☐ NON-PARTICIPATING

FEDERAL SEGREGATION (if more than one Funding Source or P.I.P. type)
☐ CCO FUNDED PER CONTRACT ☐ CCO FUNDED AS FOLLOWS

FEDERAL FUNDING SOURCE	PERCENT

ADA Notice: For individuals with sensory disabilities, this document is available in alternate formats. For information call: (916) 654-6410 or TDD (916) 654-3880 or write Records and Forms Management, 1120 N Street, MS-89, Sacramento, CA 95814.

CONTRACT CHANGE ORDER

Change Requested by: Engineer

CCO 137	Suppl. No. 0	Contract No. 04 - 0120R4	Road SF-80-12.6/13.2	FED. AID LOC.: ACBRIM-080-1(097)N

To: CC MYERS INC

You are directed to make the following changes from the plans and specifications or do the following described work not included in the plans and specifications for this contract. ***NOTE: This change order is not effective until approved by the Engineer.***

Description of work to be done, estimate of quantities and prices to be paid. (Segregate between additional work at contract price, agreed price and force account.) Unless otherwise stated, rates for rental of equipment cover only such time as equipment is actually used and no allowance will be made for idle time. This last percentage shown is the net accumulated increase or decrease from the original quantity in the Engineer's Estimate.

Extra Work at Lump Sum:

Perform all work necessary to remove and dispose of the existing water tank which conflicts with the construction of Bent 52A. The work shall include removal and disposal of all fencing, pump house, out buildings, piping and values, concrete tank, concrete foundation and other appurtenances, and the grading of the site after all removal work is completed.

For this work, the Contractor will be compensated a lump sum of $114,490.00. This sum constitutes full and final compensation for all outstanding costs, including all markups, associated with the work of this change.

Total Cost of Extra Work at Lump Sum $114,490.00

Estimated Cost: Increase ☑ Decrease ☐ **$114,490.00**

By **reason of this order the time of completion will be adjusted as follows:** 0 days

Submitted by

Signature	Resident Engineer BILL CASEY	Date 4-29-08

Approval Recommended by

Signature	Area Construction Manager DENNIS TURCHON	Date 5/24/08

Engineer Approval by

Signature	Area Construction Manager DENNIS TURCHON	Date 6/24/08

We the undersigned contractor, have given careful consideration to the change proposed and agree, if this proposal is approved, that we will provide all equipment, furnish the materials, except as may otherwise be noted above, and perform all services necessary for the work above specified, and will accept as full payment therefor the prices shown above.

NOTE: If you, the contractor, do not sign acceptance of this order, your attention is directed to the requirements of the specifications as to proceeding with the ordered work and filing a written protest within the time therein specified.

Contractor Acceptance by

Signature	(Print name and title) DANIEL E. HINRICK, PRESIDENT	Date 6/17/08

STATE OF CALIFORNIA - DEPARTMENT OF TRANSPORTATION

CONTRACT CHANGE ORDER

Change Requested by: Engineer

CCO 138	Suppl. No. 0	Contract No. 04 - 0120R4	Road SF-80-12.6/13.2	FED. AID LOC.: ACBRIM-080-1(097)N

To: CC MYERS INC

You are directed to make the following changes from the plans and specifications or do the following described work not included in the plans and specifications for this contract. ***NOTE: This change order is not effective until approved by the Engineer.***

Description of work to be done, estimate of quantities and prices to be paid. (Segregate between additional work at contract price, agreed price and force account.) Unless otherwise stated, rates for rental of equipment cover only such time as equipment is actually used and no allowance will be made for idle time. This last percentage shown is the net accumulated increase or decrease from the original quantity in the Engineer's Estimate.

Extra Work at Lump Sum:

Provide and install underground water lines and fire hydrant in accordance with Sheets 3 through 7 of this Contract Change Order.

Water line construction will be done in accordance with the stancard specifications and plans for Ductile Iron Water Mains from the San Francisco Water Department. Contractor will provide and install all pipeline materials, including pipe, valves, valve boxes, hydrants, fittings, approved joint restraining measures, thrust blocks, and polyethylene encasement tube, to the satisfaction of the San Francisco Water Department. Contractor will conduct all required pressure tests, chlorination and bacterial tests, and complete connections to the existing water lines and hydrants to the satisfaction of the San Francisco Water Department inspector.

The pipeline routing shown on Sheet 3 of this change order is schematic in nature. The Contractor, with the Engineer's approval, may adjust routing of the pipe to avoid interferences or to minimize the traffic control requirements, or to minimize the amount of surface replacement required. The allowed rerouting includes adjusting the location of the connection of the new 200 mm DIP to the existing water line. The contractor shall conduct exploratory excavations at existing utilities as required to locate any potential conflicts, and re-route the new line as required to avoid interferences. The contractor shall conduct investigations as required to locate any potential conflict with planned future pile driving, and re-route the new line as required to avoid interferences.

Surface repairs: Attached contract change order sheets 3 through 7 do not detail any pavement removal or replacement, but this will be required. Any paved areas that are damaged or removed will be replaced with equal surfacing. In all paved or concrete areas, the contractor is to replace any damaged or removed pavement and base material with an equal or greater section thickness. A neat line sawcut is required at the edges of all pavement or concrete removal and replacement.

Traffic access: If there is any closure of streets required during working hours, the Contractor is responsible to provide flaggers as required to maintain traffic. The cost of providing flaggers will be paid for under CCO No. 1. Contractor will provide necessary measures, including but not limited to: temporary plates, temporary asphalt, barricades, and alternate access roads for vehicles and equipment to pass on existing roads without disruption during non-working hours. The cost of these measures (with the exception of the flaggers) is included in the lump sum amount of this change order.

This change order price includes full compensation for any required testing and legal disposal of excavated spoils and debris materials generated during the work. This change order does not include removal of asbestos or hazardous substances. If any asbestos or hazardous substances are encountered, the Contractor shall conform to the provisions of Special Provision section 5-1.06, "REMOVAL OF ASBESTOS AND HAZARDOUS SUBSTANCES".

For this work, the Contractor will be compensated at extra work at agreed lump sum of $278,200.00. This lump sum constitutes full compensation, including all markups, for furnishing all labor, material, tools, equipment, and incidentals for doing the work involved in this change.

There will be no adjustment in contract time for this change order.

Total Cost of Extra Work at Agreed Lump Sum $278,200.00

CONTRACT CHANGE ORDER

Change Requested by: Engineer

CCO 138	Suppl. No. 0	Contract No. 04 - 0120R4	Road SF-80-12.6/13.2	FED. AID LOC.: ACBRIM-080-1(097)N

Estimated Cost: Increase ☑ Decrease ☐ $278,200.00

By reason of this order the time of completion will be adjusted as follows: 0 days

Submitted by

Signature	Resident Engineer	Date
	BILL CASEY	9-21-08

Approval Recommended by

Signature	Area Construction Manager	Date
Deanna Vilcheck	DEANNA VILCHECK	9/25/08

Engineer Approval by

Signature	Area Construction Manager	Date
Deanna Vilcheck	DEANNA VILCHECK	9/12/08

We the undersigned contractor, have given careful consideration to the change proposed and agree, if this proposal is approved, that we will provide all equipment, furnish the materials, except as may otherwise be noted above, and perform all services necessary for the work above specified, and will accept as full payment therefor the prices shown above.

NOTE: If you, the contractor, do not sign acceptance of this order, your attention is directed to the requirements of the specifications as to proceeding with the ordered work and filing a written protest within the time therein specified.

Contractor Acceptance by

Signature	(Print name and title)	Date
D E Hanick	DANIEL E. HANICK, PRESIDENT	9/10/08

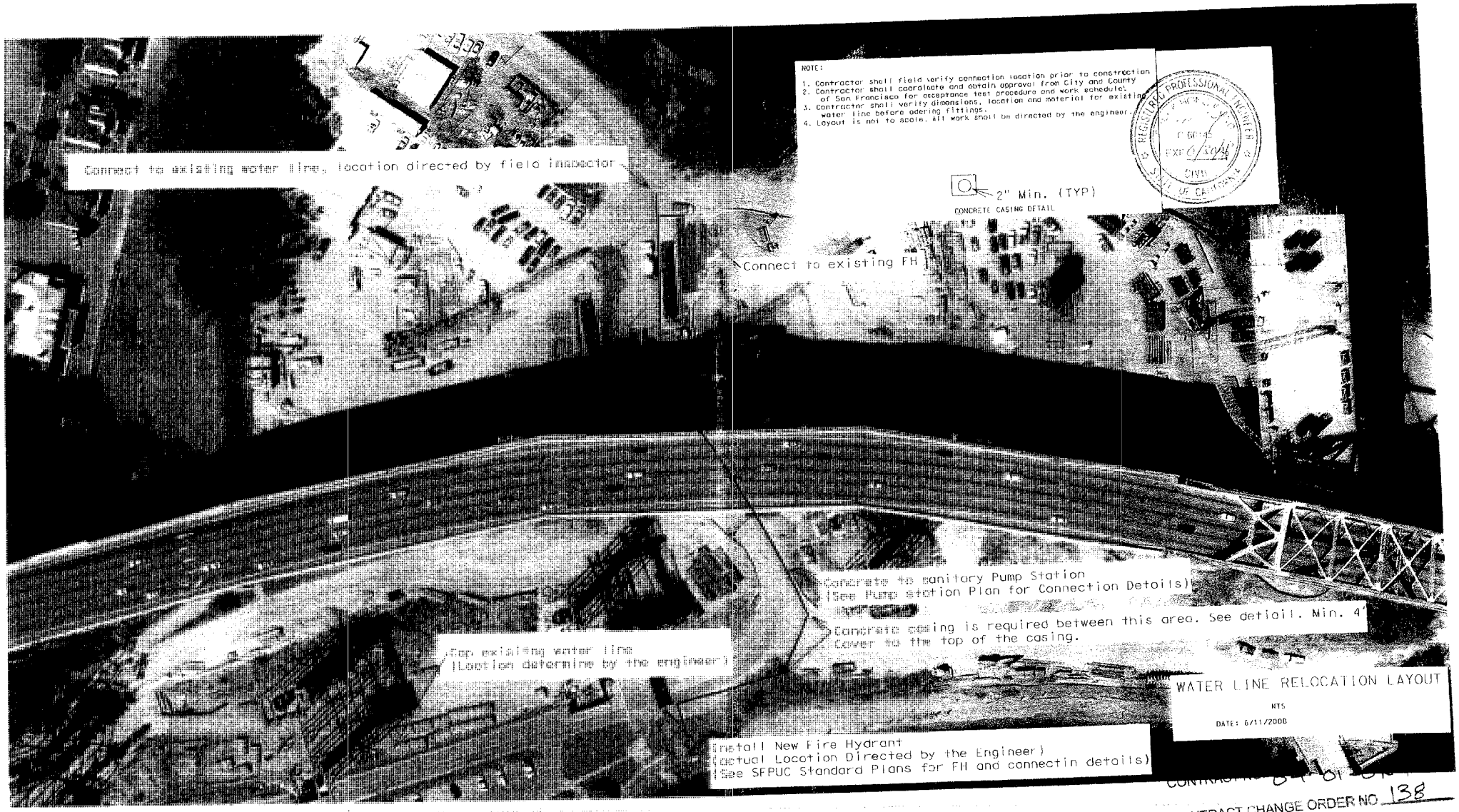

CONTRACT CHANGE ORDER NO 138

SHEET 3 OF 7

REGISTERED CIVIL ENGINEER DATE

PLANS APPROVAL DATE

THE STATE OF CALIFORNIA OR ITS OFFICERS OR AGENTS SHALL NOT BE RESPONSIBLE FOR THE ACCURACY OR COMPLETENESS OF ELECTRONIC COPIES OF THIS PLAN SHEET.

Caltrans Metric

STATE OF CALIFORNIA - DEPARTMENT OF TRANSPORTATION
DESIGN
FUNCTIONAL SUPERVISOR
CALCULATED / DESIGNED BY
CHECKED BY
REVISED BY
DATE REVISED

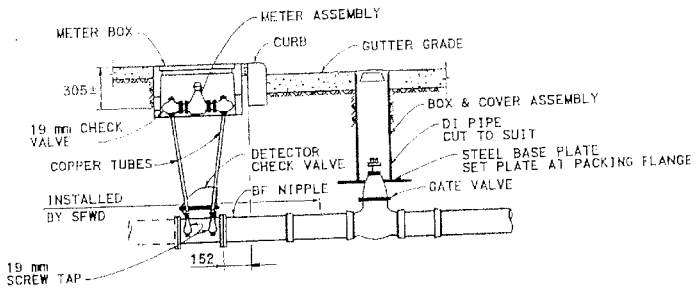

GATE VALVE	BOX
Stop Cock	152 mm
102 mm	152 mm
152 mm	152 mm
203 mm	203 mm
305 mm	203 mm
406 mm	203 mm

GATE VALVE AND METER ASSEMBLY

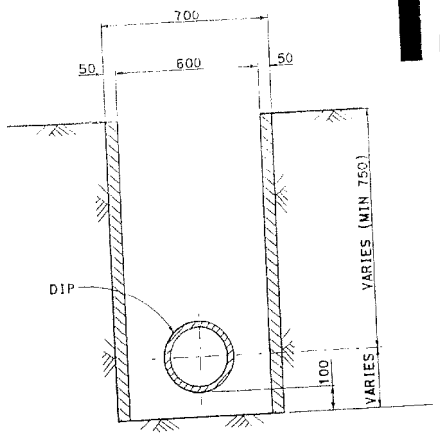

TRENCH EXCAVATION WITH LAGGING DETAIL

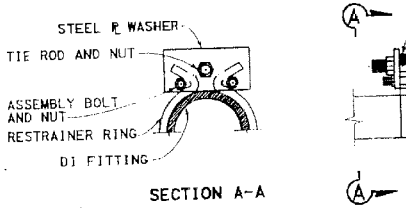

SECTION A-A

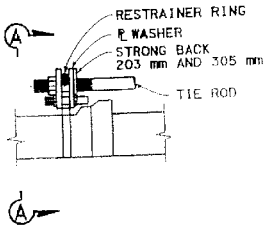

TIE RODS	
PIPE SIZE	ROD SIZE
102 mm	16 mm
152 mm	16 mm
203 mm	19 mm
305 mm	25 mm
406 mm	32 mm

RESTRAINER RING

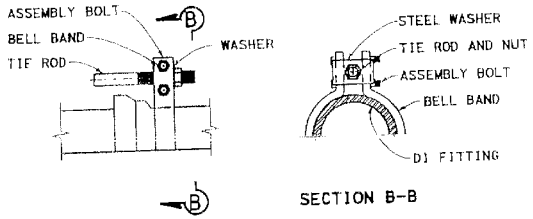

SECTION B-B

BELL BAND

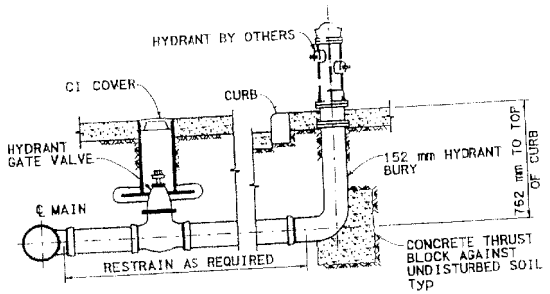

FIRE HYDRANT

NOTES:

1. ALL MATERIALS SHOWN ON THE PLANS SHALL BE ASSEMBLED AND INSTALLED BY THE CONTRACTOR EXCEPT WHERE NOTED OTHERWISE.
2. ALL FITTINGS 25 mm OR LESS SHALL BE BRASS UNLESS OTHERWISE SHOWN ON THE PLANS.
3. ALL WATER METERS TO BE FURNISHED AND INSTALLED BY SFWD.
4. TIE NEW ANGLE COCK JUST TO THE RIGHT OF AND APPROXIMATELY 25 mm BELOW EXISTING ANGLE COCK.

CONTRACT NO. 04-0120R4

CONTRACT CHANGE ORDER NO 138

SHEET 4 OF 7

UTILITY DETAILS

CITY AND COUNTY OF SAN FRANCISCO

NO SCALE

ALL DIMENSIONS ARE IN MILLIMETERS UNLESS OTHERWISE SHOWN

UD - 1

CU 04251

USERNAME => 5126310

DATE PLOTTED => 28-MAR-2008

REGISTERED CIVIL ENGINEER DATE

PLANS APPROVAL DATE

THE STATE OF CALIFORNIA OR ITS OFFICERS OR AGENTS SHALL NOT BE RESPONSIBLE FOR THE ACCURACY OR COMPLETENESS OF ELECTRONIC COPIES OF THIS PLAN SHEET.

REGISTERED PROFESSIONAL ENGINEER — CIVIL — STATE OF CALIFORNIA

Caltrans Metric

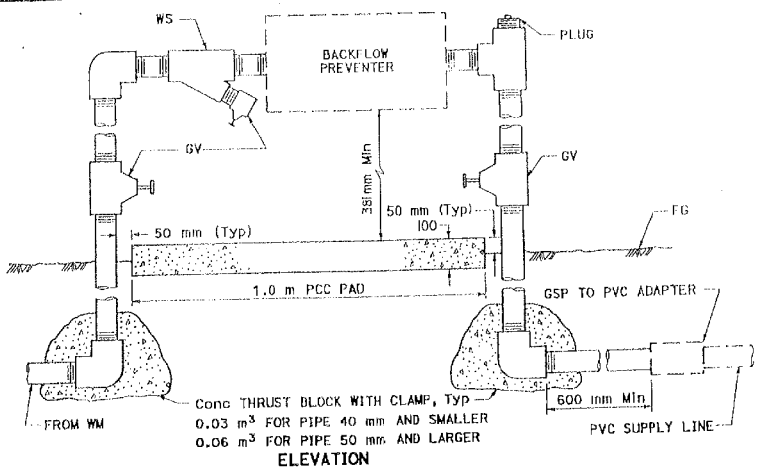

BACKFLOW PREVENTER ASSEMBLY

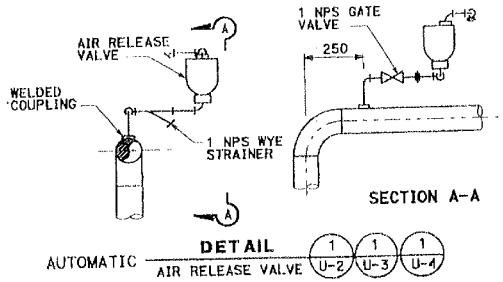

TABLE FOR DETAIL 2

PIPE	SIZE X (NPS)	VALVE TYPE
CCSF SEWER	50	GATE
CCSF WATER	50	GATE
CCSF RECLAIM WATER	50	GATE
DOMESTIC WATER	25	BALL

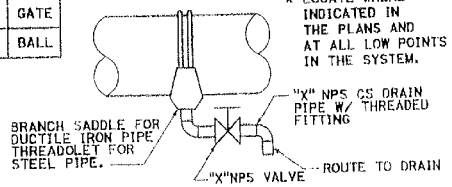

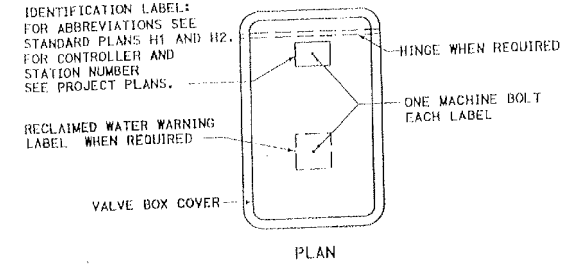

VALVE BOX IDENTIFICATION

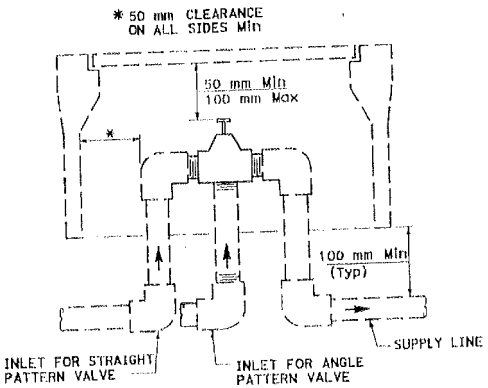

VALVE

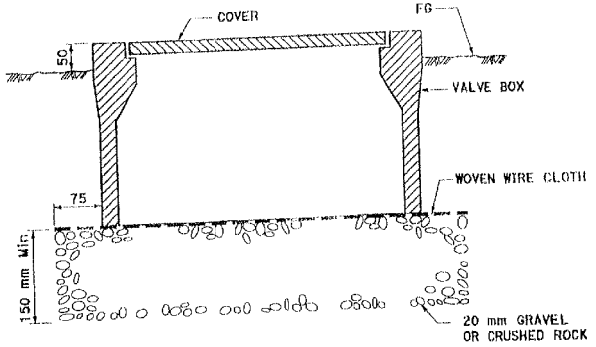

VALVE BOX

CONTRACT NO. 04-0120R4

CONTRACT CHANGE ORDER NO. 138

SHEET 5 OF 7

UTILITY DETAILS

CITY AND COUNTY OF SAN FRANCISCO

NO SCALE

ALL DIMENSIONS ARE IN MILLIMETERS UNLESS OTHERWISE SHOWN

UD - 2

STATE OF CALIFORNIA - DEPARTMENT OF TRANSPORTATION — DESIGN

REVISED BY | DATE REVISED | CALCULATED-DESIGNED BY | CHECKED BY | FUNCTIONAL SUPERVISOR

RELATIVE BORDER SCALE 0 20 40 60 80 USERNAME => s128310

BORDER LAST REVISED 3/1/2007

Dist	COUNTY	ROUTE	KILOMETER POST TOTAL PROJECT	SHEET No.	TOTAL SHEETS
04	SF	80	12.7/13.2		

REGISTERED CIVIL ENGINEER DATE

PLANS APPROVAL DATE

THE STATE OF CALIFORNIA OR ITS OFFICERS OR AGENTS SHALL NOT BE RESPONSIBLE FOR THE ACCURACY OR COMPLETENESS OF ELECTRONIC COPIES OF THIS PLAN SHEET.

Caltrans Metric

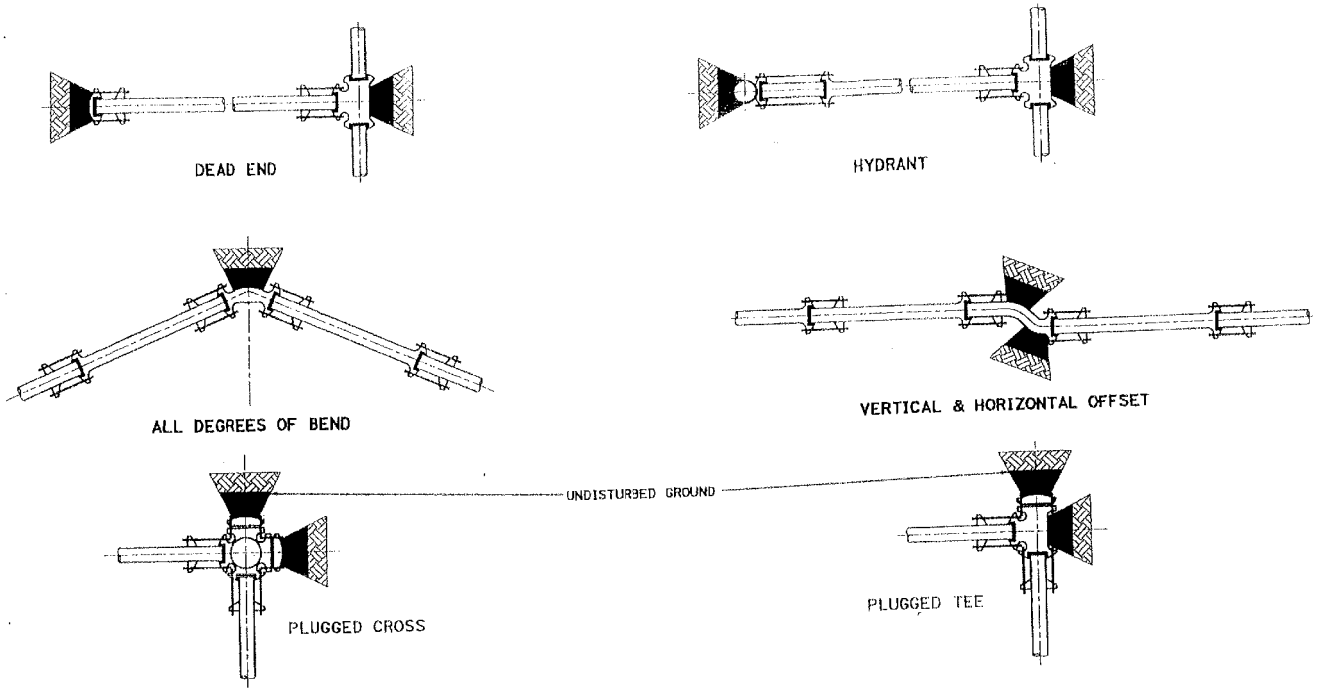

CONTRACT NO. 04-0120R4

CONTRACT CHANGE ORDER NO 138

SHEET 6 OF 7

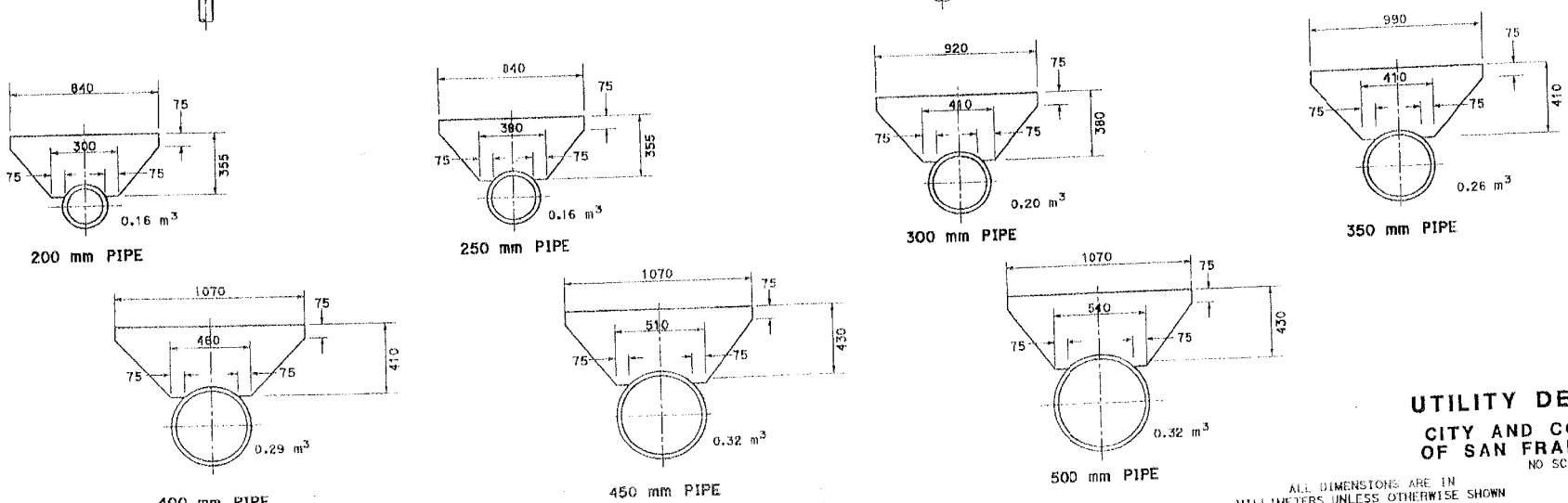

THRUST BLOCK DETAILS

UTILITY DETAILS

CITY AND COUNTY OF SAN FRANCISCO

NO SCALE

ALL DIMENSIONS ARE IN MILLIMETERS UNLESS OTHERWISE SHOWN

UD - 3

STATE OF CALIFORNIA - DEPARTMENT OF TRANSPORTATION

Caltrans DESIGN

FUNCTIONAL SUPERVISOR

CALCULATED-DESIGNED BY

CHECKED BY

REVISED BY

DATE REVISED

LAST REVISION 03-17-08 DATE PLOTTED => 28-MAR-2008 TIME PLOTTED => 10:43

CU 04251

RELATIVE BORDER SCALE 0 20 40 60 80

USERNAME => 6128310

BORDER LAST REVISED 3/1/2007

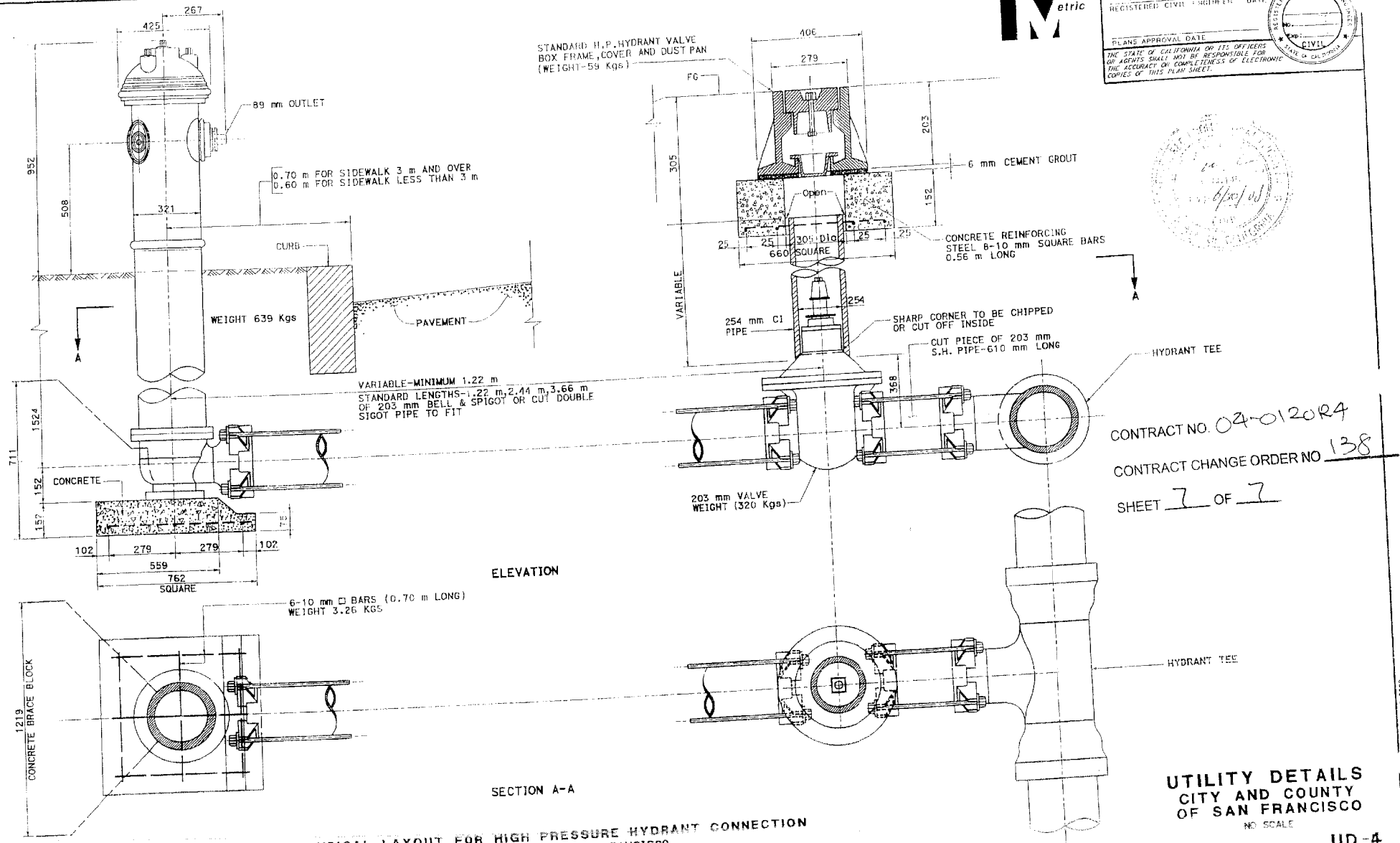

TYPICAL LAYOUT FOR HIGH PRESSURE HYDRANT CONNECTION
CITY AND COUNTY OF SAN FRANCISCO

ALL DIMENSIONS ARE IN MILLIMETERS UNLESS OTHERWISE SHOWN

Dist	COUNTY	ROUTE	KILOMETER POST TOTAL PROJECT	SHEET No.	TOTAL SHEETS
04	SF	80	12.7/13.2		

REGISTERED CIVIL ENGINEER DATE

PLANS APPROVAL DATE

THE STATE OF CALIFORNIA OR ITS OFFICERS OR AGENTS SHALL NOT BE RESPONSIBLE FOR THE ACCURACY OR COMPLETENESS OF ELECTRONIC COPIES OF THIS PLAN SHEET.

REGISTERED PROFESSIONAL ENGINEER — No. — Exp: — CIVIL — STATE OF CALIFORNIA

CONTRACT NO. 04-0120R4

CONTRACT CHANGE ORDER NO 138

SHEET 7 OF 7

STATE OF CALIFORNIA - DEPARTMENT OF TRANSPORTATION
DESIGN

REVISED BY | DATE REVISED
CALCULATED-DESIGNED BY | CHECKED BY
FUNCTIONAL SUPERVISOR

UTILITY DETAILS
CITY AND COUNTY OF SAN FRANCISCO

NO SCALE

UD-4

CONTRACT CHANGE ORDER

Change Requested by: Engineer

CCO 139	Suppl. No. 0	Contract No. 04 - 0120R4	Road SF-80-12.6/13.2	FED. AID LOC.: ACBRIM-080-1(097)N

To: **CC MYERS INC**

You are directed to make the following changes from the plans and specifications or do the following described work not included in the plans and specifications for this contract. ***NOTE: This change order is not effective until approved by the Engineer.***

Description of work to be done, estimate of quantities and prices to be paid. (Segregate between additional work at contract price, agreed price and force account.) Unless otherwise stated, rates for rental of equipment cover only such time as equipment is actually used and no allowance will be made for idle time. This last percentage shown is the net accumulated increase or decrease from the original quantity in the Engineer's Estimate.

Adjustment of Compensation at Lump Sum:

As determined by the Engineer and as shown on Sheet 4 of 4 of this change, modify Section 5-1.30, Environmentally Sensitive Areas (General), of the Contract Special Provisions to read as follows:

I. ENVIRONMENTALLY SENSITIVE AREAS (GENERAL)

A. ENVIRONMENTALLY SENSITIVE AREAS

Environmentally sensitive areas (ESA) shall consist of areas within and near the limits of construction where access is prohibited or limited for the preservation of archeological site, historic architectural resource or existing vegetation, or protection of biological habitat as shown on the plans. The Engineer will determine the exact location of the boundaries of the ESAs. No work shall be conducted within the ESAs, except ESAs 1a and 1b:

1. ESA 1a and 1b, Environmentally Sensitive Areas
   ESA 1a consists of asphalt concrete paved area and unpaved slope area.
   ESA 1b is located within the asphalt concrete paved area.
   The boundaries of the paved areas of the ESAs 1a and 1b shall be installed with a 200-mm white thermoplastic delineation.
   Within the paved areas and delineated boundaries of the ESAs 1a and 1b, no work involving asphalt removal or earth disturbance and/or removal, including but not limited to driving posts for fencing, signing, or utility trenching, shall be allowed.. Limited access to these ESAs may be allowed for vehicle and equipment access, storage or transport of materials or equipment vehicle or equipment access, storage and stockpiling, or transport of materials, when approved in writing by the Engineer.
   Within the unpaved slope area of ESA 1a, no work involving earth disturbance, including but not limited to driving posts for fencing, or signing, shall be allowed. The Contractor shall submit to the Engineer the protection plans including the scope of the work, in conformance with the requirements in "Working Drawings," of these special provisions. The Contractor equipment access will not be allowed, unless the Contractor has obtained a written approval from the Engineer.

2. ESA 2b and 2c
   ESA 2b consists of the Senior Officers' Quarters Historic District (Quarters 1 through 7), Historic Architectural Resource, and grounds. There will be no truck traffic through ESA 2b and the holly tree adjacent to the southeast corner of Quarters 1/Nimitz House shall remain in place.
   ESA 2c consists of Quarters 8, and grounds.

3. ESA 3, Quarters 10, Building 267 (garage), and grounds.

4. ESA 5, Vegetation, Environmentally Sensitive Areas, including mature vegetation screen located on slope southwest of Quarters 1 (Nimitz House), and pittosporum trees.

5. ESA 6, Tidal wetlands, water-based ESA (by others), located on the north side of YBI.

6. ESA 7, Eelgrass beds, water-based ESA (by others), located on the south sides of YBI.

7. ESA 8, Eelgrass beds, water-based ESA (by others), located on the north sides of YBI.

8. ESA 9a and 9b, concrete retaining walls and weir, Historic Architectural Resource.

Attention is directed to Section 7—1.01 "Laws to be Observed," and Section 7—1.04 "Permits and Licenses," of the Standard Specifications regarding State and Federal regulations, permits, or agreements which pertain to an ESA.

Water-based ESA boundaries have been marked with USCG-approved buoys, and have been established and will be maintained by others.

Land-based ESA boundaries shall be clearly marked by either the installation of Temporary Fence (Type ESA) or thermoplastic pavement delineation as specified elsewhere in these special provisions. The boundaries shall be checked periodically and the markings repaired or replaced as necessary during construction.

Within the boundaries of land-based ESAs 1a (unpaved area), ESAs 2b and 2c, ESA 3, ESA 5, and ESA 9a and 9b and water-based ESAs 6, 7, and 8, no project related activities shall take place, without the written approval from the Engineer. This specifically prohibits vehicle and barge access, storage or transport of any materials, including hydrocarbon and lead contaminated material, or any other project related activities. The Contractor shall take such measures, including the posting of written notices to his employees and subcontractors, to ensure that ESAs are not entered or disturbed.

The Contractor shall mitigate damage or impacts to the ESAs caused by the Contractor's operations, at the Contractor's expense in accordance with Section 7-1.11 of the Standard Specifications. Any additional mitigation assessed to the Department will be the responsibility of the Contractor. If necessary, deductions from moneys due or to become due the Contractor will be made for the mitigation costs.

RESOURCE REGULATIONS AND MANDATES

In compliance with Section 106 of the National Historic Preservation Act of 1966, any archaeological resource discovered during construction activities must be evaluated by the Department of Transportation Archaeologist.

The California Public Resources Code (PRC) Sections 5097.00 and 5097.98 require protection of Native American remains which might be discovered and outlines procedures for handling any burials found. The California PRC Section 5097.9 and Health and Safety Code Section 7050 require coordination with the Native American Heritage Commission.

Under California PRC, Chapter 1.7, Section 5097.5, it is a misdemeanor charge for anyone to knowingly disturb a historical feature or steal an archaeological resource. The California Administrative Code, Title 14, Section 4307, mandates that no person shall disfigure any object of historical interest or value. Under California Penal Code, Title 14, Part 1, Section 622-1.2, it is a misdemeanor to destroy anything of historical value within any public place.

All archaeological resources located on Department of Transportation property are property of the State of California. All archaeological resources located on Federal property are property of the Federal government and are governed by federal environmental laws, such as, but not limited to, the Antiquities Act of 1906, the Archaeological Resources Protection Act, and the Native American Graves Protection and Repatriation Act.

B. AREA TO BE MONITORED (ATM)

The Department Archaeologist will monitor the delineated ATM area.

No construction activities involving asphalt removal or earth disturbance and/or removal shall be allowed within the ATM area shown on the plans, unless the Contractor has obtained a written approval from the Engineer.

The Contractor shall obtain the Engineer's approval in writing at least 20 days in advance of the beginning of the removal of the top 0.6-m in depth of roadway excavation within the ATM, in order to have the Department Archaeologist begin to mobilize

CONSTRUCTION

The Department Archaeologist shall have the authority to halt construction operations in the vicinity of an archaeological find, if significant or potentially significant cultural resources are exposed or if the find will be adversely affected by construction operations.

In the event that human skeletal material or archaeological resources should be uncovered within the ATM area and/or contract limits, the Contractor shall immediately notify the Engineer, who in turn will notify the Department Archaeologist and the State may conduct an archaeological investigation. The Contractor's construction activities within 15-m of the find shall be halted immediately and shall not be resumed until so permitted, in writing by the Engineer.

When determined by the Department Archaeologist that an archaeological investigation is required, and as requested by the Engineer, the Contractor shall provide construction equipment and operators and/or laborers and shall cooperate with and assist Department Archaeologist(s) in their conducting of any of the archaeological work, if necessary.

CONTRACT CHANGE ORDER

Change Requested by: Engineer

CCO 139	Suppl. No. 0	Contract No. 04 - 0120R4	Road SF-80-12.6/13.2	FED. AID LOC.: ACBRIM-080-1(097)N

The Contractor shall provide, within 24 hours at the request of the Engineer:

1. A grading bucket with flat blade.
2. Suitable access/egress ramp or ladders or stairs in the ATM area as directed by the Engineer.

The above equipment and material items required for the archaeological work as specified in this sectionwill be paid for as extra work as provided in Section 4-1.03D of the Standard Specifications.

If, in the opinion of the Engineer, the Contractor's operations are delayed or interfered with by reason of such discoveries, the State will compensate the Contractor for the delays to the extent provided in Section 8-1.09, "Right of Way Delays," of the Standard Specifications, and not otherwise, except as provided in Section 8-1.10, "Utility and Non-Highway Facilities," of the Standard Specifications.

C. SPECIAL CONSTRUCTION AREA (SCA)

The special construction area is designated as the landscaping restoration area to be constructed by others.

The Contractor will be allowed inside SCA area. The Contractor shall not encroach into the designated ESA area bounded by ESA 2b, the Senior Officers' Quarters Historic District (Quarters 1 through 7), as shown on the plans. Damages to the existing pavement, sidewalk and curb caused by the Contractor's operations, shall be replaced in kind at the Contractor's expenses.

There will be no cost/no credit due to the work of this change at this time, however, any additional cost incurred such as delineation work, as ordered by the Engineer, will be handled in a separate contract change order.

Total Cost of Adjustment of Compensation at Agreed Lum Sum.....$0.00

RECEIVED
2009 JUN 29
010602

Estimated Cost: Increase ☐ Decrease ☐ **$0.00**

By reason of this order the time of completion will be adjusted as follows: 0 days

Submitted by

Signature	Resident Engineer	Date
	BILL CASEY	5-11-09

Approval Recommended by

Signature	Area Construction Manager	Date
Deanna Vilcheck	DEANNA VILCHECK	5/28/09

Engineer Approval by

Signature	Area Construction Manager	Date
Deanna Vilcheck	DEANNA VILCHECK	6/23/09

We the undersigned contractor, have given careful consideration to the change proposed and agree, if this proposal is approved, that we will provide all equipment, furnish the materials, except as may otherwise be noted above, and perform all services necessary for the work above specified, and will accept as full payment therefor the prices shown above.

NOTE: If you, the contractor, do not sign acceptance of this order, your attention is directed to the requirements of the specifications as to proceeding with the ordered work and filing a written protest within the time therein specified.

Contractor Acceptance by

Signature	(Print name and title)	Date
	STEVE FRANCIS, CHIEF ESTIMATOR	6/8/09

STATE OF CALIFORNIA - DEPARTMENT OF TRANSPORTATION

CONTRACT CHANGE ORDER MEMORANDUM

DATE: 4/23/2008 Page 1 of 1

TO: MIKE FORNER / DEANNA VILCHECK	FILE: E.A. 04 - 0120R4
FROM: BILL CASEY	CO-RTE-PM SF-80-12.6/13.2
	FED. NO. ACBRIM-080-1(097)N
CCO#: 139 SUPPLEMENT#: 0 Category Code: CXSA	CONTINGENCY BALANCE (incl. this change) $59,316,492.60
COST: $0.00 INCREASE ☐ DECREASE ☐	HEADQUARTERS APPROVAL REQUIRED? ☑ YES ☐ NO
SUPPLEMENTAL FUNDS PROVIDED: $0.00	IS THIS REQUEST IN ACCORDANCE WITH ENVIRONMENTAL DOCUMENTS? ☑ YES ☐ NO
CCO DESCRIPTION: ESA Specification Change	**PROJECT DESCRIPTION:** CONSTRUCT ROUTE 80 TEMP BYPASS STRUCTURE

Original Contract Time:	Time Adj. This Change:	Previously Approved CCO Time Adjustments:	Percentage Time Adjusted: (including this change)	Total # of Unreconciled Deferred Time CCO(s): (including this change)
475 Day(s)	0 Day(s)	1195 Day(s)	252 %	7

THIS CHANGE ORDER PROVIDES FOR:

Modifying Section 5-1.30, Environmentally Sensitive Areas (General), of the Contract Special Provisions.

This project, the Temporary Bypass Structure (TBS), was awarded in March 2004 to construct a detour that will allow for the tie in of the new east span of the San Francisco Oakland Bay Bridge to Yerba Buena Island. The TBS encompasses three main structures, the East Tie-In (ETI) to the existing bridge, the West Tie-In (WTI) to Yerba Buena Island, and the Viaduct structure between the two tie ins.

This change is necessary to accurately delineate each of the ESA limits within the project, to include the specific nature of each ESA, and to detaill what work is needed to protect each ESA.

Alec Melkonians, Assistant Project Manager - Toll Bridge Program, requested this change per his memo dated February 19, 2008 and was concurred by with Hong Wong - Project Engineer.

Any cost incurred by the Contractor will be deferred at this time.

Maintenance concurrence is not required as the work doesn't affect any permanent roadway features.

CONCURRED BY:

Construction Engineer:	Mahantesh Anigol, Dist. Rep	Date 5/17/09
Bridge Engineer:		Date
Project Engineer:	Hong Wong, PE	Date 5/14/09
Project Manager:	Alec Melkonians	Date 2/19/08
FHWA Rep.:		Date
Environmental:	Stefan Galvez	Date 5/27/09
Other (specify):	Janet Pape - Archaeology	Date 6/3/09
Other (specify):	Elizabeth Krase - Cultural Resc.	Date 6/3/09
District Prior Approval By:		Date
HQ (Issue Approve) By:	Bob Molera, HQ CCO Engineer	Date 5/26/09
Resident Engineer's Signature:		Date

5-17-09

ESTIMATE OF COST

	THIS REQUEST	TOTAL TO DATE
ITEMS	$0.00	$0.00
FORCE ACCOUNT	$0.00	$0.00
AGREED PRICE	$0.00	$0.00
ADJUSTMENT	$0.00	$0.00
TOTAL	$0.00	$0.00

FEDERAL PARTICIPATION

☐ PARTICIPATING ☐ PARTICIPATING IN PART ☑ NONE
☐ NON-PARTICIPATING (MAINTENANCE) ☐ NON-PARTICIPATING

FEDERAL SEGREGATION (if more than one Funding Source or P.I.P. type)
☑ CCO FUNDED PER CONTRACT ☐ CCO FUNDED AS FOLLOWS

FEDERAL FUNDING SOURCE	PERCENT

ADA Notice: For individuals with sensory disabilities, this document is available in alternate formats. For information call: (916) 654-6410 or TDD (916) 654-3880 or write Records and Forms Management, 1120 N Street, MS-89, Sacramento, CA 95814.

CONTRACT CHANGE ORDER

Change Requested by: Engineer

CCO 140	Suppl. No. 0	Contract No. 04 - 0120R4	Road SF-80-12.6/13.2	FED. AID LOC.: ACBRIM-080-1(097)N

To: **CC MYERS INC**

You are directed to make the following changes from the plans and specifications or do the following described work not included in the plans and specifications for this contract. ***NOTE: This change order is not effective until approved by the Engineer.***

Description of work to be done, estimate of quantities and prices to be paid. (Segregate between additional work at contract price, agreed price and force account.) Unless otherwise stated, rates for rental of equipment cover only such time as equipment is actually used and no allowance will be made for idle time. This last percentage shown is the net accumulated increase or decrease from the original quantity in the Engineer's Estimate.

Extra Work at Lump Sum:

Perform all work shown on the plans and specifications of Pages No. 3 through 81 of this change order to provide for the steel fabrication and delivery of the steel truss of the East Tie-In (ETI) portion of the Temporary Bypass Structure (Bridge No. 34-0006 (TEMP)).

For this work, the Contractor shall be compensated a lump sum of $7,578,730.00. Except for the items of work specifically excluded below, this sum constitutes full and final compensation, including all markups, for all costs associated with the work of this change.

The costs of procuring all raw steel, welding wire and fasteners for the truss are excluded from this change and shall be compensated under Change Order No. 112.

The cost of furnishing all expansion joints, elastomeric bearing pads, decking and floor beam shear studs for the truss are excluded from this change order.

The costs associated with the erection of the truss and the fabrication and erection of the ETI skid bent and beam are excluded from this change order.

The cost of transporting the fabricated steel of the truss to the project site is included in this change order. In the event the fabricated steel is required to be delivered and stored off-site, all additional storage, handling and transportation costs associated with this off-site storage shall be compensated under a separate change order.

The costs of unloading the fabricated steel at the project site are excluded from this change order and shall be compensated under a separate change order.

Total Cost of Extra Work at Agreed Lump Sum $7,578,730.00

There shall be no reduction in compensation for check samples removed from any mill located more than 480 airline kilometers from Sacramento and Los Angeles or for additional shop inspection expenses sustained by the State for fabrication sites more than 300 airline miles from both Sacramento and Los Angeles.

All payment clauses contained within the specifications of this change order are superseded by the agreed lump sum and force account payment methods specified above.

CONTRACT CHANGE ORDER

Change Requested by: Engineer

CCO 140	Suppl. No. 0	Contract No. 04 - 0120R4	Road SF-80-12.6/13.2	FED. AID LOC.: ACBRIM-080-1(097)N

Estimated Cost: Increase ☑ Decrease ☐ $7,578,730.00

By reason of this order the time of completion will be adjusted as follows: Deferred

Submitted by

Signature	Resident Engineer	Date
	BILL CASEY	5-27-08

Approval Recommended by

Signature	SFOBB Construction Manager	Date
	MIKE FORNER	6-2-08

Engineer Approval by

Signature	SFOBB Construction Manager	Date
	MIKE FORNER	

We the undersigned contractor, have given careful consideration to the change proposed and agree, if this proposal is approved, that we will provide all equipment, furnish the materials, except as may otherwise be noted above, and perform all services necessary for the work above specified, and will accept as full payment therefor the prices shown above.

NOTE: **If you, the contractor, do not sign acceptance of this order, your attention is directed to the requirements of the specifications as to proceeding with the ordered work and filing a written protest within the time therein specified.**

Contractor Acceptance by

Signature	(Print name and title)	Date

SFOBB TEMPORARY BYPASS STRUCTURE

EAST TIE-IN SEGMENT
ROLL – OUT ROLL – IN

100% SUPERSTRUCTURE SPECIFICATIONS (STEEL STRUCTURES ONLY)

BRIDGE NO. 34-0006 (TEMP)

Location: 04-SF-80-12.6/13.2
EA No.: 0120R4

Project Title: South/South Detour – San Francisco-Oakland Bay Bridge
Project No.: 1295

Volume 1 of 1

CONTRACT NO. 04-0120R4

CONTRACT CHANGE ORDER NO 140

SHEET 3 OF 84

April 4, 2008

CONTRACT NO. 04-0120R4

The special provisions contained herein have been prepared by or under the direction of the following Registered Persons.

STRUCTURES

REGISTERED CIVIL ENGINEER

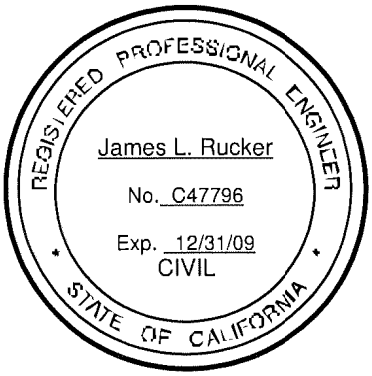

CONTRACT NO. 04-0120 R4

CONTRACT CHANGE ORDER NO 140

SHEET 4 OF 84

TABLE OF CONTENTS

TABLE OF CONTENTS 3
10-1.__ STEEL STRUCTURES 4
GENERAL 4
MATERIALS 4
FABRICATION 5
ELASTOMERIC BEARING PADS 5
CHECK TESTING 5
ROTATIONAL CAPACITY TESTING PRIOR TO SHIPMENT TO JOB SITE 6
INSTALLATION TENSION TESTING AND ROTATIONAL CAPACITY TESTING AFTER ARRIVAL ON THE JOB SITE 11
SURFACE PREPARATION 12
SEALING 12
REMOVE AND REPLACE FASTENERS 12
WELDING 13
MEASUREMENT AND PAYMENT 14

CONTRACT NO. 04-0120R4

CONTRACT CHANGE ORDER NO 140

SHEET 5 OF 84

10-1.__ STEEL STRUCTURES

Construction of steel structures, including skid bents, shall conform to the provisions in Section 55, "Steel Structures," of the Standard Specifications and these special provisions.

GENERAL

Skid bents shall be constructed by the Contractor and, when no longer required for the construction of the work, shall be removed in conformance with the provisions in "Bridge Removal" of these special provisions.

Attention is directed to "Welding" in Section 8, "Materials," of these special provisions. Fabrication and erection shall conform to ANSI/AASHTO/AWS D1.5, the Standard Specifications, and these special provisions.

Attention is directed to "Bridge Removal," of these special provisions regarding removal of skid bents.

Facing of Bearing Surfaces

The surface finish of bearing and base plates and other bearing surfaces that are to come in contact with each other or with concrete shall meet the ANSI surface roughness requirements as defined in ANSI B46.1, "Surface Roughness, Waviness, and Lay," Part I:

Bearing Surface	ANSI Requirement
Heavy plates in contact in shoes to be welded	1 000
Milled ends of compression members, milled or ground ends of stiffeners and fillers	500
Sliding bearings	125

The following substitutions, A 490 for A 490M only or A 325 for A 325M only as shown on the plans, of high-strength steel fasteners may be made:

METRIC SIZE SHOWN ON THE PLANS	SIZE TO BE SUBSTITUTED
ASTM Designation: A490M or A 325M (Nominal bolt diameter (mm))	ASTM Designation: A490 or A 325 (Nominal bolt diameter (inch))
13, 12.70, or M12	1/2
16, 15.88, or M16	5/8
19, 19.05, or M20	3/4
22, 22.22, or M22	7/8
24, 25, 25.40, or M24	I
29, 28.58, or M27	1 1/8
32, 31.75, or M30	1 1/4
38, 38.10, or M36	1 1/2

MATERIALS

Structural steel shall conform to ASTM Designation: A709M or as otherwise shown in the plans. Charpy V-notch testing shall use Zone 2 requirements.

HSS members shall conform to ASTM Designation: A500, Grade B, or ASTM Designation: A847, with Charpy V-Notch testing performed on a heat basis (H) per ASTM Designation: A673 with an acceptance criteria of 20J at 4C minimum average.

Steel for members, shown on the plans as fracture critical members, shall conform to the requirements in AWS D1.5, Section 12, "AASHTO/AWS Fracture Control Plan (FCP) for Non-Redundant Members." Charpy V-notch (CVN) impact values for fracture critical members shall conform to the requirements for Zone 2.

At the option of the Contractor, steel pipe for skid bents may be fabricated from plate as specified below or purchased as a tubular fabricated in accordance with API SPECIFICATION 5L, Grade X52 with PSL2. Pipe shall be fabricated by an API licensed facility and shall include API Monogram marking. Pipe furnished in accordance with these requirements will be considered equivalent to ASTM Designation: A709, Grade 345T2 with respect to weld procedure qualification and other requirements of AWS D1.5.

FABRICATION

The Contractor shall submit to the Engineer for approval in accordance with the requirements for "Working Drawings" of these special provisions, written detailed procedures for the fabrication and erection of the ETI Truss. Procedures shall include inspection hold points and description of the sequence and practices to be used to ensure that the dimensional tolerances are met.

Fabricated Steel Pipe (Skid Bents)

Cylindrical tubular members formed from steel plate shall be fabricated as single seam welded pipe in accordance with the requirements in API "Specification for the Fabrication of Structural Steel Pipe- API SPECIFICATION 2B," 6th Edition, with the following modifications:

A. Plate shall conform to the requirements on the plans
B. Welding consumables shall conform to AWS D1.5, Table 4.1 for matching filler
C. Weld procedures shall be qualified and applied in accordance with AWS D1.5, including Charpy V-Notch testing and welding heat input control.
D. Charpy V-Notch tests of the coarse grained heat affected zone shall be included in the weld procedure qualification tests and shall meet the base steel Zone 1 requirement
E. Longitudinal seams shall be examined 100% by radiographic or ultrasonic inspection in accordance with API Spec 2B.
F. Acceptance criteria for RT and UT in API Spec 2B, Section 7.3 shall be replaced by AWS D1.5, Section 6.26 for welds in tension.

ELASTOMERIC BEARING PADS

Elastomeric bearing pads shall conform to the provisions in Section 51-1.12H, "Elastomeric Bearing Pads," of the Standard Specifications and these special provisions.

Elastomeric bearing pads shall be bonded to steel with adhesive conforming to Federal Specification MMM-A-121, where shown on the plans.

CHECK TESTING

Structural steel shall conform to the designated ASTM Standard and the check testing requirements of this section.

Check samples shall be furnished for each heat of maximum thickness of:

A. Tension flanges and webs of fracture critical members.

CONTRACT NO. 04-0120R4
CONTRACT CHANGE ORDER NO 140
SHEET 7 OF 84

Steel plates, shapes, or bars containing check samples shall be furnished from the mill with extra length in order to provide for removal of material for check samples at the point of fabrication. Check samples may be cut from either end of the designated plate, shape, or bar.

At the option of the Contractor, check samples may be removed at the rolling mill rather than at the point of fabrication. The sample will be removed from the mill plate that will be stripped by the fabricator to produce the designated plate and may be taken from any location within that plate. The mill plate from which samples are removed shall be marked with the same identifying numbers as are used on the samples.

Material for check samples shall be removed by the Contractor in the presence of the Engineer. Check samples for plates wider than 610 mm shall be 355 mm wide and 460 mm long with the long dimension transverse to the direction of rolling. Check samples for all other products shall be 460 mm long, taken in the direction of rolling, and the width shall be the product width. Check samples shall be removed and delivered to the Engineer before the material is fabricated into components. The direction of rolling, heat numbers, and plate numbers shall be marked on the samples with paint or other indelible marking material or may be steel stamped in one corner of the plate.

Check samples shall be delivered to the Transportation Laboratory at the Contractor's expense. The check samples will be tested by the Transportation Laboratory for compliance with the requirements specified in ASTM and these special provisions. Check sample test results will be reported to the Contractor within 3 weeks of delivery to the Transportation Laboratory. In the event several samples are submitted on the same day, an additional day will be added for every 2 samples submitted. The test report will be made for the group of samples.

The results of the tensile and impact tests shall not vary more than 5 percent below the specified minimum or 5 percent above the specified maximum requirements. If the initial check test results vary more than 5 percent but not more than 10 percent from the specified requirements, a retest may be performed on another sample from the same heat and thickness. The results of the retest shall not vary more than 5 percent from the original specified requirements. If the results of check tests exceed these permissible variations, material planned for use from the heat represented by said check samples shall be subject to rejection.

ROTATIONAL CAPACITY TESTING PRIOR TO SHIPMENT TO JOB SITE

Rotational capacity tests shall be performed on all lots of high-strength fastener assemblies prior to shipment of these lots to the project site. Zinc-coated assemblies shall be tested after all fabrication, coating, and lubrication of components has been completed. One hardened washer shall be used under each nut for the tests.

The requirements of this section do not apply to high-strength cap screws or high-strength bolts used for slip base plates.

Each combination of bolt production lot, nut lot, and washer lot shall be tested as an assembly.

A rotational capacity lot number shall be assigned to each combination of lots tested. Each shipping unit of fastener assemblies shall be plainly marked with the rotational capacity lot number.

Two fastener assemblies from each rotational capacity lot shall be tested.

The following equipment, procedure, and acceptance criteria shall be used to perform rotational capacity tests on and determine acceptance of long bolts. Fasteners are considered to be long bolts when full nut thread engagement can be achieved when installed in a bolt tension measuring device:

A. Long Bolt Test Equipment:

CONTRACT NO. 04-0120R4
CONTRACT CHANGE ORDER NO 140
SHEET 8 OF 84

1. Calibrated bolt tension measuring device with adequate tension capacity for the bolts being tested.
2. Calibrated dial or digital torque wrench. Other suitable tools will be required for performing Steps 7 and 8 of the Long Bolt Test Procedure. A torque multiplier may be required for large diameter bolts.
3. Spacer washers or bushings. When spacer washers or bushings are required, they shall have the same inside diameter and equal or larger outside diameter as the appropriate hardened washers conforming to the requirements in ASTM Designation: F436.
4. Steel beam or member, such as a girder flange or cross frame, to which the bolt tension measuring device will be attached. The device shall be accessible from the ground.

B Long Bolt Test Procedure:

1. Measure the bolt length. The bolt length is defined as the distance from the end of the threaded portion of the shank to the underside of the bolt head.
2. Install the nut on the bolt so that 3 to 5 full threads of the bolt are located between the bearing face of the nut and the underside of the bolt head. Measure and record the thread stickout of the bolt. Thread stickout is determined by measuring the distance from the outer face of the nut to the end of the threaded portion of the shank.
3. Insert the bolt into the bolt tension measuring device and install the required number of washers, and additional spacers as needed, directly beneath the nut to produce the thread stickout measured in Step 2 of this procedure.
4. Tighten the nut using a hand wrench to a snug-tight condition. The snug tension shall not be less than the Table A value but may exceed the Table A value by a maximum of 2 kips.

Table A—High-Strength Fastener Assembly Tension Values to Approximate Snug-Tight Condition

Bolt Diameter (inches)	Snug Tension (kips)	
	A 325	A 490
1/2	1	2
5/8	2	2
3/4	3	4
7/8	4	5
1	5	6
1 1/8	6	8
1 1/4	7	10
1 3/8	9	12
1 1/2	10	15

5. Match-mark the assembly by placing a heavy reference start line on the face plate of the bolt tension measuring device which aligns with 1) a mark placed on one corner of the nut, and 2) a radial line placed across the flat on the end of the bolt, or on the exposed portions of the threads of tension control bolts. Place an additional mark on the outside of the socket that overlays the mark on the nut corner such that this mark will be visible while turning the nut. Make an additional mark on the face plate, either 2/3 of a turn, one turn, or 1 1/3 turn clockwise from the heavy reference start line, depending on the bolt length being tested as shown in Table B.

CONTRACT NO. 04-012024
CONTRACT CHANGE ORDER NO 140
SHEET 9 OF 84

A325 and A490 Table B

Required Nut Rotation for Rotational Capacity Tests[a,b]	
Bolt Length (measured in Step 1)	Required Rotation (turn)
4 bolt diameters or less	2/3
Greater than 4 bolt diameters but no more than 8 bolt diameters	1
Greater than 8 bolt diameters, but no more than 12 bolt diameters[c]	1 1/3
(a) Nut rotation is relative to bolt, regardless of the element (nut or bolt) being turned. For bolts installed by 1/2 turn and less, the tolerance shall be plus or minus 30 degrees; for bolts installed by 2/3 turn and more, the tolerance shall be plus or minus 45 degrees. (b) Applicable only to connections in which all material within grip of the bolt is steel. (c) When bolt length exceeds 12 diameters, the required rotation shall be determined by actual tests in a suitable tension device simulating the actual conditions.	

6. Turn the nut to achieve the applicable minimum bolt tension value listed in Table C. After reaching this tension, record the moving torque, in foot-pounds, required to turn the nut, and also record the corresponding bolt tension value in pounds. Torque shall be measured with the nut in motion. Calculate the value, T (in ft-lbs), where T=[(the measured tension in pounds) x (the bolt diameter in inches) / 48 in/ft].

Table C—Minimum Tension Values for High-Strength Fastener Assemblies

Bolt Diameter (inches)	Minimum Tension (kips)	
	A 325	A 490
½	12	15
5/8	19	24
¾	28	35
7/8	39	49
1	51	64
1 1/8	56	80
1 ¼	71	102
1 3/8	85	121
1 ½	103	148

7. Turn the nut further to increase bolt tension until the rotation listed in Table B is reached. The rotation is measured from the heavy reference line made on the face plate after the bolt was snug-tight. Record this bolt tension.
8. Loosen and remove the nut and examine the threads on both the nut and bolt.

C. Long Bolt Acceptance Criteria:

CONTRACT NO. 04-0120R4
CONTRACT CHANGE ORDER NO 140
SHEET 10 OF 14

1. An assembly shall pass the following requirements to be acceptable: 1) the measured moving torque (Step 6) shall be less than or equal to the calculated value, T (Step 6), 2) the bolt tension measured in Step 7 shall be greater than or equal to the applicable turn test tension value listed in Table D, 3) the nut shall be able to be removed from the bolt without signs of thread stripping or galling after the required rotation in Step 7 has been achieved, 4) the bolt does not shear from torsion or fail during the test, and 5) the assembly does not seize before the final rotation in Step 7 is reached. Elongation of the bolt in the threaded region between the bearing face of the nut and the underside of the bolt head is expected and will not be considered a failure. Both fastener assemblies tested from one rotational capacity lot shall pass for the rotational capacity lot to be acceptable.

Table D—Turn Test Tension Values

Bolt Diameter (inches)	Turn Test Tension (kips)	
	A 325	A 490
½	14	17
5/8	22	28
3/4	32	40
7/8	45	56
1	59	74
1 1/8	64	92
1 1/4	82	117
1 3/8	98	139
1 1/2	118	170

The following equipment, procedure, and acceptance criteria shall be used to perform rotational capacity tests on and determine acceptance of short bolts. Fasteners are considered to be short bolts when full nut thread engagement cannot be achieved when installed in a bolt tension measuring device:

A. Short Bolt Test Equipment:

1. Calibrated dial or digital torque wrench. Other suitable tools will be required for performing Steps 7 and 8 of the Short Bolt Test Procedure. A torque multiplier may be required for large diameter bolts.
2. Spud wrench or equivalent.
3. Spacer washers or bushings. When spacer washers or bushings are required, they shall have the same inside diameter and equal or larger outside diameter as the appropriate hardened washers conforming to the requirements in ASTM Designation: F436.
4. Steel plate or girder with a hole to install bolt. The hole size shall be 1.6 mm greater than the nominal diameter of the bolt to be tested. The grip length, including any plates, washers, and additional spacers as needed, shall provide the proper number of threads within the grip, as required in Step 2 of the Short Bolt Test Procedure.

B. Short Bolt Test Procedure:

1. Measure the bolt length. The bolt length is defined as the distance from the end of the threaded portion of the shank to the underside of the bolt head.

CONTRACT NO. 04-012024
CONTRACT CHANGE ORDER NO 140
SHEET 11 OF 84

2. Install the nut on the bolt so that 3 to 5 full threads of the bolt are located between the bearing face of the nut and the underside of the bolt head. Measure and record the thread stickout of the bolt. Thread stickout is determined by measuring the distance from the outer face of the nut to the end of the threaded portion of the shank.
3. Install the bolt into a hole on the plate or girder and install the required number of washers and additional spacers as needed between the bearing face of the nut and the underside of the bolt head to produce the thread stickout measured in Step 2 of this procedure.
4. Tighten the nut using a hand wrench to a snug-tight condition. The snug condition shall be the full manual effort applied to the end of a 305 mm long wrench. This applied torque shall not exceed 20 percent of the maximum allowable torque in Table E.

Table E—Maximum Allowable Torque for High-Strength Fastener Assemblies

Bolt Diameter (inches)	Torque (ft-lbs)	
	A 325	A 490
½	145	180
5/8	285	360
3/4	500	630
7/8	820	1030
1	1220	1540
1 1/8	1500	2160
1 1/4	2130	3060
1 3/8	2800	3990
1 1/2	3700	5320

5. Match-mark the assembly by placing a heavy reference start line on the steel plate or girder which aligns with 1) a mark placed on one corner of the nut and 2) a radial line placed across the flat on the end of the bolt or on the exposed portions of the threads of tension control bolts. Place an additional mark on the outside of the socket that overlays the mark on the nut corner such that this mark will be visible while turning the nut. Make 2 additional small marks on the steel plate or girder, one 1/3 of a turn and one 2/3 of a turn clockwise from the heavy reference start line on the steel plate or girder.
6. Using the torque wrench, tighten the nut to the rotation value listed in Table F. The rotation is measured from the heavy reference line described in Step 5 made after the bolt was snug-tight. A second wrench shall be used to prevent rotation of the bolt head during tightening. Measure and record the moving torque after this rotation has been reached. The torque shall be measured with the nut in motion.

CONTRACT NO. 04-0120R4

CONTRACT CHANGE ORDER NO 140

SHEET 12 OF 84

A325 and A490 Table F

Nut Rotation Required for Turn-of-Nut Installation[a,b]	
Bolt Length (measured in Step 1)	Required Rotation (turn)
4 bolt diameters or less	1/3
(a) Nut rotation is relative to bolt, regardless of the element (nut or bolt) being turned. For bolts installed by 1/2 turn and less, the tolerance shall be plus or minus 30 degrees. (b) Applicable only to connections in which all material within grip of the bolt is steel.	

7. Tighten the nut further to the 2/3-turn mark as indicated in Table G. The rotation is measured from the heavy reference start line made on the plate or girder when the bolt was snug-tight. Verify that the radial line on the bolt end or on the exposed portions of the threads of tension control bolts is still in alignment with the start line.

A325 and A490 Table G

Required Nut Rotation for Rotational Capacity Test	
Bolt Length (measured in Step 1)	Required Rotation (turn)
4 bolt diameters or less	2/3

8. Loosen and remove the nut and examine the threads on both the nut and bolt.

C. Short Bolt Acceptance Criteria:

1. An assembly shall pass the following requirements to be acceptable: 1) the measured moving torque from Step 6 shall be less than or equal to the maximum allowable torque from Table E, 2) the nut shall be able to be removed from the bolt without signs of thread stripping or galling after the required rotation in Step 7 has been achieved, 3) the bolt does not shear from torsion or fail during the test, and 4) the assembly shall not seize before the final rotation in Step 7 is reached. Elongation of the bolt in the threaded region between the bearing face of the nut and the underside of the bolt head will not be considered a failure. Both fastener assemblies tested from one rotational capacity lot shall pass for the rotational capacity lot to be acceptable.

INSTALLATION TENSION TESTING AND ROTATIONAL CAPACITY TESTING AFTER ARRIVAL ON THE JOB SITE

Installation tension tests and rotational capacity tests on high-strength fastener assemblies shall be performed by the Contractor prior to acceptance or installation and after arrival of the fastener assemblies on the project site. Installation tension tests and rotational capacity tests shall be performed at the job-site, in the presence of the Engineer, on each rotational capacity lot of fastener assemblies.

The requirements of this section do not apply to high-strength cap screws or high-strength bolts used for slip base plates.

Installation tension tests shall be performed on 3 representative fastener assemblies in conformance with the provisions in Section 8, "Installation," of the RCSC Specification. For short bolts, Section 8.2, "Pretensioned Joints," of the RCSC Specification shall be replaced by

CONTRACT NO. 04-012024
CONTRACT CHANGE ORDER NO 140
SHEET 13 OF 84

the "Pre-Installation Testing Procedures," of the "Structural Bolting Handbook," published by the Steel Structures Technology Center, Incorporated.

The rotational capacity tests shall be performed in conformance with the requirements for rotational capacity tests in "Rotational Capacity Testing Prior to Shipment to Job Site" of these special provisions.

At the Contractor's expense, additional installation tension tests, tests required to determine job inspecting torque, and rotational capacity tests shall be performed by the Contractor on each rotational capacity lot, in the presence of the Engineer, if 1) any fastener is not used within 3 months after arrival on the jobsite, 2) fasteners are improperly handled, stored, or subjected to inclement weather prior to final tightening, 3) significant changes are noted in original surface condition of threads, washers, or nut lubricant, or 4) the Contractor's required inspection is not performed within 48 hours after all fasteners in a joint have been tensioned.

Failure of a job-site installation tension test or a rotational capacity test will be cause for rejection of unused fasteners that are part of the rotational capacity lot.

When direct tension indicators are used, installation verification tests shall be performed in conformance with Appendix Section X1.4 of ASTM Designation: F959, except that bolts shall be initially tensioned to a value 5 percent greater than the minimum required bolt tension.

SURFACE PREPARATION

For all bolted connections, the 1) contact surfaces, 2) outer surfaces of existing members that are within the grip and will be hidden by surfaces of outside existing members within the grip under bolt heads, nuts, and washers, and 3) inside surfaces of bolt holes shall be cleaned and coated before assembly in conformance with the provisions for cleaning and painting structural steel of these special provisions.

SEALING

The perimeter around all direct tension indicator gaps shall be completely sealed with non-silicone type sealing compound conforming to the provisions in Federal Specification TT-S-230, Type II. The sealant shall be gray in color and have a minimum thickness of 1.3 mm. If painting is required, the sealing compound shall be applied prior to painting.

When zinc-coated tension control bolts are used, the sheared end of each fastener shall be completely sealed with non-silicone type sealing compound conforming to the provisions in Federal Specification TT-S-230, Type II. The sealant shall be gray in color and shall have a minimum thickness of 1.3 mm. The sealant shall be applied to a clean sheared surface on the same day that the splined end is sheared off.

REMOVE AND REPLACE FASTENERS

Existing rivets shall be removed and replaced with new high strength bolts as shown on the plans, as specified in these special provisions, and as directed by the Engineer.

Cleaning and painting of exposed steel surfaces in connection with drilling and bolting operations shall conform to the provisions in "Surface Preparation" and "Sealing" of this section.

The Contractor shall submit to the Engineer, in conformance with the provisions in Section 5-1.02, "Plans and Working Drawings," of the standard specifications, the proposed method of rivet removal and replacement for approval. The Contractor shall allow 10 working days review time, after complete drawings and procedures are received by the Engineer.

Unless otherwise shown on the plans, Contractor shall replace rivets with bolts in one group at a time, where a group consists of those rivets connecting a single member to a single gusset plate. The Contractor shall remove and replace no more than 20% of the rivets in a group at a

CONTRACT NO. 04-012084
CONTRACT CHANGE ORDER NO 140
SHEET 14 OF 84

time. Rivet removal will not be permitted until the removal and replacement method has been approved by the Engineer.

Where existing rivets are removed, the holes shall be enlarged not more than 1.5 mm in diameter greater than the nominal diameter of the replacement bolt.

Rivets to be removed shall have their head chipped off and the shank driven or drilled out. Care shall be taken not to enlarge rivet holes or to damage remaining material. If heat is to be used, the Contractor shall demonstrate the adequacy of his proposed removal method to the Engineer for approval.

Heat resulting from any removal method shall not damage or change rivet holes or the surrounding material.

Rust on the sides of the holes shall be removed. Holes shall be reamed, as approved by the Engineer, in conformance with the provisions in "Surface Preparation Specification No.2" of the SSPC: The Society for Protective Coatings, if the rust cannot be removed by any other means.

Where reamed holes are enlarged by more than 3 mm larger than the replacement bolt nominal diameter, the next larger size bolt shall be installed. If the Engineer orders such hole enlargement, replacement with the next larger size bolt will be paid for as extra work as provided in Section 4-1.03D, "Extra Work," of the Standard Specifications.

Where such hole enlargement is done without the Engineer's approval, replacement with the next larger size bolt will be at the Contractor's expense.

Holes shall be enlarged by reaming. Flame cutting will not be permitted.

Holes which must be enlarged to facilitate entry of the bolt shall be reamed. Poor alignment of holes shall be cause for rejection. Where reamed holes exceed the nominal diameter of the bolt by more than 3 mm, the next larger size bolt shall be installed. Where the misalignment occurs in existing material, the larger bolt will be paid for as extra work as provided in Section 4-1.03D, "Extra Work," of the Standard Specifications, otherwise the larger bolt shall be at the Contractor's expense.

Full compensation for removing and replacing fasteners as shown on the plans, or removing and replacing fasteners in order to erect new structural steel, or as needed by the Contractor to verify dimensions, shall be considered as included in the contract prices paid per pound for erect structural steel of the types shown on the Engineer's Estimate and no additional compensation will be allowed therefor.

WELDING

Table 2.2 of AWS D1.5 is superseded by the following table:

Base Metal Thickness of the Thicker Part Joined, mm	Minimum Effective Partial Joint Penetration Groove Weld Size, * mm
Over 6 to 13 inclusive	5
Over 13 to 19 inclusive	6
Over 19 to 38 inclusive	8
Over 38 to 57 inclusive	10
Over 57 to 150 inclusive	13
Over 150	16

* Except the weld size need not exceed the thickness of the thinner part

Dimensional details and workmanship for welded joints in tubular and pipe connections shall conform to the provisions in Part A, "Common Requirements of Nontubular and Tubular Connections," and Part D, "Specific Requirements for Tubular Connections," in Section 2 of AWS D1.1.

CONTRACT NO. 04-012024
CONTRACT CHANGE ORDER NO 140
SHEET 15 OF 84

Backing for welds, subject to computed stresses, that is left in place in the completed structure as shown on the plans or approved by the Engineer shall be a single length. Backing shall be of the same material as the structural steel being welded. Single lengths of backing shall be obtained by using a continuous strip, or may consist of lengths of backing joined by full penetration butt welds. Butt welds in the backing material shall be subject to the same type and frequency of testing as specified for the type of joint in the material being joined. Butt welds in backing material shall be ground flush as necessary to obtain proper inspection and for proper fit-up in the welded joint with which the backing is to be used.

Welding of temporary fixtures such as lifting lugs or temporary shear enhancement devices shall be shown on the working drawings and shall conform to AWS D1.5. After removal, the structure shall be repaired as necessary to meet the requirements of these special provisions and AWS D1.5.

Gas Metal Arc Welding (GMAW), but not with short-circuiting transfer, will be permitted only for tack welding of structural members.

Weld joint details BTC-P10, BTC-P10-GF, BTC-P10-S from Figure 3.3 of AWS D1.1 shall be included as standard weld joint details as if it were included in Figure 2.5 in AWS D1.5.

MEASUREMENT AND PAYMENT

If a portion of or all check samples are removed at a mill more than 480 air line kilometers from both Sacramento and Los Angeles, shop inspection expenses will be sustained by the State which are in addition to expenses incurred for fabrication site inspection. Payment to the Contractor for furnishing structural steel will be reduced $2,000 for each mill located more than 480 air line kilometers from both Sacramento and Los Angeles.

Furnish structural steel (truss) and furnish structural steel (skid bent) will be paid for in the same manner as specified for furnish structural steel (bridge) in Section 55-4.02, "Payment," of the Standard Specifications.

Erect structural steel (truss) and erect structural steel (skid bent) will be paid for in the same manner as specified for erect structural steel (bridge) in Section 55-4.02, "Payment," of the Standard Specifications.

The contract lump sum price paid for strengthen existing bridge shall include full compensation for furnishing all labor, materials, tools, equipment, and incidentals and for doing all work involved in strengthen existing bridge, complete in place, including elastomeric bearing pads, as shown on the plans, as specified in the Standard Specifications and these special provisions, and as directed by the Engineer.

CONTRACT NO. 04-0120R4

CONTRACT CHANGE ORDER NO 140

SHEET 16 OF 84

10-5.__ CLEAN AND PAINT STRUCTURAL STEEL

New metal surfaces, except where galvanized, shall be cleaned and painted in conformance with the provisions in Section 59-2, "Painting Structural Steel," and Section 91, "Paint," of the Standard Specifications and these special provisions.

Cleaning and painting of skid bents will not be required.

Prior to performing any painting or paint removal, the Contractor shall submit to the Engineer, in conformance with the provisions in Section 5-1.02, "Plans and Working Drawings," of the Standard Specifications, 3 copies of a separate Painting Quality Work Plan (PQWP) for each item of work for which painting or paint removal is to be performed. As a minimum, each PQWP shall include the following:

A. The name of each Contractor or subcontractor to be used.
B. One copy each of all current "SSPC: The Society for Protective Coatings" specifications or qualification procedures which are applicable to the painting or paint removal to be performed. These documents shall become the permanent property of the Department.
C. Proposed methods and equipment to be used for any paint application.
D. Proof of written documents and demonstration to the Engineer showing conformance with the requirements in Section 3, "General Qualification Requirements of SSPC-QP 3. Equal or greater certification will be acceptable.

The Engineer shall have 2 weeks to review the PQWP submittal after a complete plan has been received. No painting or paint removal shall be performed until the PQWP for that work is reviewed by the Engineer. Should the Engineer fail to complete the review within this time allowance and if, in the opinion of the Engineer, the Contractor's controlling operation is delayed or interfered with by reason of the delay in reviewing the PQWP, the delay will be considered a right of way delay in conformance with the provisions in Section 8-1.09, "Right of Way Delays," of the Standard Specifications.

CLEANING

New metal surfaces shall be dry blast cleaned in conformance with the requirements in Surface Preparation Specification No. 10, "Near White Blast Cleaning," of the "SSPC: The Society for Protective Coatings." Blast cleaning shall leave surfaces with a dense, uniform, angular anchor pattern of not less than 40 µm nor more than 86 µm as measured in conformance with the requirements in ASTM Designation: D 4417.

Mineral and slag abrasives used for blast cleaning steel shall conform to the requirements in Abrasive Specification No. 1, "Mineral and Slag Abrasives," of the "SSPC: The Society for Protective Coatings" and shall not contain hazardous material. Mineral and slag abrasives shall comply with the requirements for Class A, Grade 2 to 3 as defined therein.

A Certificate of Compliance conforming to the provisions in Section 6-1.07, "Certificates of Compliance," of the Standard Specifications and a Material Safety Data Sheet shall be furnished prior to use for each shipment of blast cleaning material for steel.

The inside surfaces of bolt holes shall be cleaned in conformance with the requirements in Surface Preparation Specification No. 1, "Solvent Cleaning," of the "SSPC: The Society for Protective Coatings," and visible rust shall be removed.

Corners shall be chamfered to remove sharp edges.

Thermal cut edges (TCEs) to be painted shall be conditioned such that the blast profile is achieved as required in these special provisions.

PAINTING

Blast cleaned surfaces shall receive a single undercoat, consisting of an inorganic zinc coating conforming to the requirements in AASHTO Designation M 300, Type I or Type II, except that: 1) the first 3 sentences of Section 5.6, "Primer Field Performance Requirements," and the entire Section 5.6.1 shall not apply for Type II inorganic zinc coating, and 2) zinc dust shall be Type II in conformance with the requirements in ASTM Designation: D 520. The inorganic zinc coating shall be listed on the qualified products list which may be obtained from the Transportation Laboratory.

Standard Specifications Section 59-1.03 shall be amended that airless spray method shall be allowed to be used.

The inside surfaces of bolt holes shall be painted with one application of a zinc rich primer (organic vehicle type) after the application of the undercoat of inorganic zinc on adjacent steel. The steel surfaces adjacent to the bolt holes shall be kept clean and protected from drippings during the application of the primer.

The color of the final application of inorganic zinc coating shall be grey.

Inorganic zinc coating shall be used within 12 hours of initial mixing.

Application of inorganic zinc coating shall conform to the provisions for applying zinc-rich coating in Section 59-2.13, "Application of Zinc-Rich Primer," of the Standard Specifications.

Inorganic zinc coating shall not be applied when the atmospheric or surface temperature is less than 7°C or more than 29°C, nor when the relative humidity exceeds 85 percent.

The single undercoat of inorganic zinc coating shall be applied to the required dry film thickness in 2 or more applications within 24 hours of the start of blast cleaning, provided blast cleaned surfaces are free from flash rust or visible contamination.

The total dry film thickness of all applications of the inorganic zinc undercoat, including the surfaces of outside existing members within the grip under bolt heads, nuts and washers, shall be not less than 75 µm nor more than 125 µm, except that the total dry film thickness on each faying (contact) surface of high strength bolted connections shall be between 25 µm and the maximum allowable dry film thickness for Class B coatings as determined by certified testing in conformance with Appendix A of the "Specification for Structural Joints Using ASTM A325 or A 490 Bolts" of the Research Council on Structural Connections (RCSC Specification). Unless otherwise stated, all inorganic zinc coatings used on faying surfaces shall meet the slip coefficient requirements for a Class B coating on blast-cleaned steel, as specified in the RCSC Specification. The Contractor shall provide results of certified testing showing the maximum allowable dry film thickness for the Class B coating from the qualifying tests for the coating he has chosen, and shall maintain the coating thickness on actual faying surfaces of the structure at or below this maximum allowable coating thickness.

SSPC-PA2 shall be modified for dry film thickness measurement. In Section 4.3.1, "Minimum Thickness," Inspection criteria which allow the lowest DFT spot as low as 80% of the specified DFT shall not apply. All measurement shall meet the minimum specified dry film thickness.

Areas where mudcracking occurs in the inorganic zinc coating shall be blast cleaned and repainted with inorganic zinc coating to the specified thickness.

Dry spray, or overspray, as defined in the Steel Structures Painting Manual, Volume 1, "Good Painting Practice," of the "SSPC: The Society for Protective Coatings," shall be removed prior to application of subsequent coats or final acceptance. Removal of dry spray shall be by screening or other methods that minimize polishing of the inorganic zinc surface. The dry film thickness of the coating after removal of dry spray shall be in conformance with the provisions for applying the single undercoat, as specified herein.

The inorganic zinc coating shall be tested for adhesion and hardness. The locations of the tests will be determined by the Engineer. The sequence of the testing operations shall be determined by the Contractor. The testing for adhesion and hardness will be performed no sooner than 72 hours after application of the single undercoat of inorganic zinc coating. At the Contractor's expense, satisfactory access shall be provided to allow the Engineer to determine the locations of the tests and to test the inorganic zinc coating hardness. The inorganic zinc coating shall pass the following tests:

Adhesion

- The inorganic zinc coating shall have a minimum adhesion to steel of 4 MPa when measured at no more than 6 locations per span on each girder using a self-aligning adhesion tester in conformance with the requirements in ASTM Designation: D 4541. The Contractor, at the Contractor's expense, shall: (1) verify compliance with the adhesion requirements, (2) furnish test results to the Engineer, and (3) repair the coating after testing.

Hardness

- The inorganic zinc coating, when properly cured, shall exhibit a solid, hard, and polished metal surface when firmly scraped with the knurled edge of a quarter. Inorganic zinc coating that is powdery, soft, or does not exhibit a polished metal surface, as determined by the Engineer, shall be repaired by the Contractor, at the Contractor's expense, by blast cleaning and repainting with inorganic zinc coating to the specified thickness.

Finish coats will not be required.

At the Contractor's option, blast cleaned surfaces shall receive a single undercoat of Carbozinc 859 organic zinc primer. Application of the primer shall be according to the manufacturer's recommendation and the following:

a) At a minimum, surface preparation shall be performed in conformance with the requirements of Surface Preparation Specification No. 6, "Commercial Blast Cleaning" of the "SSPC: The Society for Protective Coatings."

b) Non-faying surface dry film thickness shall be between 6 mils and 10 mils. Faying surface dry film thickness shall be as recommended by the manufacturer to meet Class B slip coefficient.

c) Manufacturer's certification of suitability of Carbozinc 859 without a finish coat shall be provided to the Engineer.

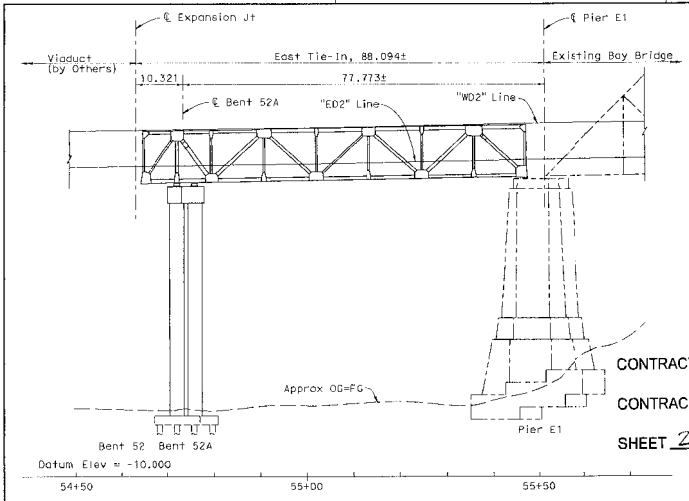

PROJECTED ELEVATION

1:400

Note: Longitudinal dimensions measured along "WD2" or "ED2" line. For clarity, north truss is not shown.

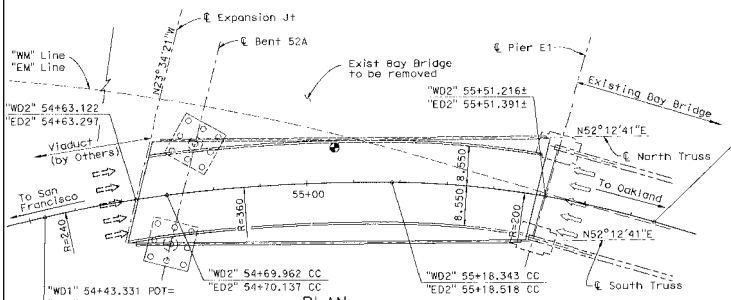

PLAN

1:400

"WD2" 55+75.148 EC=
"WD1" 55+75.755 POT
"ED2" 55+75.323 EC=
"ED1" 55+75.930 POT

LEGEND:

- Indicates Existing Structure
- Indicates Bridge Removal
- Indicates Deck Drain
- Indicates Westbound Traffic
- Indicates Eastbound Traffic
- Indicates Minimum Clearance (See Note 3)

Notes:

1. The Contractor shall verify all controlling field dimensions before ordering or fabricating any material.
2. For General Notes, Index to Caltrans Standard Plans, Pile Data Table, see "General Notes" sheets.
3. For section showing minimum clearance, see "Typical Section" sheet.

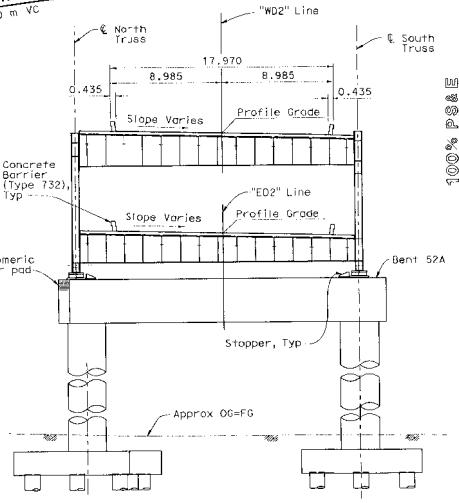

TYPICAL SECTION

1:150

Note: Dimensions measured perpendicular to "WD2" or "ED2" line.

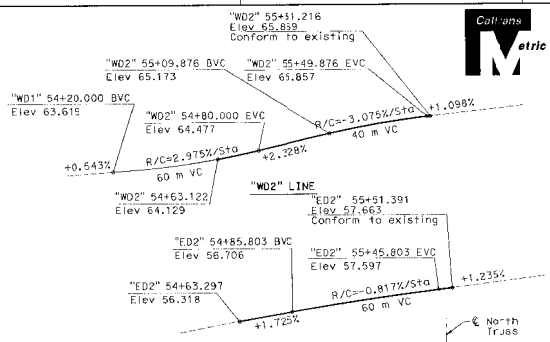

PROFILE GRADE

NO SCALE

CONTRACT NO. 04-0120R4

CONTRACT CHANGE ORDER NO. 140

SHEET 20 OF 84

DIST	COUNTY	ROUTE	KILOMETER POST TOTAL PROJECT	SHEET NO	TOTAL
04	SF	80	12.6/13.2		

REGISTERED CIVIL ENGINEER

4-7-08

PLANS APPROVAL DATE

Sajid Abbas No. C 055274 Exp. 12/31/09 CIVIL STATE OF CALIFORNIA

The State of California or its officers or agents shall not be responsible for the accuracy or completeness of electronic copies of this plan sheet.

T.Y. LIN / MOFFATT & NICHOL
Two Harrison Street, Suite 300
San Francisco, CA 94105

T. Ostrom/M. Whiteside/A. Akinsanya	DESIGN	BY S. Abbas	CHECKED S. Cheng	LOAD FACTOR DESIGN	LIVE LOADING: HS20-44 AND ALTERNATIVE AND PERMIT DESIGN LOAD	PREPARED FOR THE STATE OF CALIFORNIA DEPARTMENT OF TRANSPORTATION	M. Sah PROJECT ENGINEER
DESIGN OVERSIGHT	DETAILS	BY S. Lee	CHECKED A. Lee	LAYOUT	BY CHECKED		S. Abbas PROJECT MANAGER
SIGN OFF DATE	QUANTITIES	BY H. Nelson	CHECKED A. Lee	SPECIFICATIONS	BY PLANS AND SPECS COMPARED		12.6

BRIDGE NO. 34-0006 (TEMP.) KP (PM)

ALL DIMENSIONS ARE IN METERS UNLESS OTHERWISE SHOWN

SAN FRANCISCO OAKLAND BAY BRIDGE EAST SPAN SEISMIC SAFETY PROJECT

EAST TIE-IN

GENERAL PLAN

DESIGN GENERAL PLAN SHEET (METRIC) (REV.3/1/99) ROUTE# #TIME# Pen Table File

ORIGINAL SCALE IN MILLIMETERS FOR REDUCED PLANS 0 10 20 30 40 50 60 70 80 90 100

CU EA 0120R4

FILE =>S:\SD\04-0120R\Sfl\dgn\aagpe01.dgn

DISREGARD PRINTS BEARING EARLIER REVISION DATES

REVISION DATES (PRELIMINARY STAGE ONLY)

SHEET 1 OF 214

DGNNAME =>ALCE DATE PLOTTED => 4/7/2008 TIME PLOTTED => 8:48:17 PM

100% PS&E

INDEX TO PLANS

SHEET NO. TITLE

1.	GENERAL PLAN	(Note 1 & 3)
2.	INDEX TO PLANS	(Note 1,2 & 3)
3.	GENERAL NOTES NO. 1	(Note 1)
4.	GENERAL NOTES NO. 2	(Note 3)
5.	DECK CONTOURS	
6.	FOUNDATION PLAN	(Note 1)
7.	BENT 52A LAYOUT	
8.	BENT CAP DETAILS NO. 1	
9.	BENT CAP DETAILS NO. 2	
10.	BENT CAP DETAILS NO. 3	
11.	BENT CAP DETAILS NO. 4	
12.	BENT 52A FOOTING DETAILS NO. 1	(Note 1)
13.	BENT 52A FOOTING DETAILS NO. 2	
14.	SKID BENT FOOTING DETAILS NO. 1	
15.	SKID BENT FOOTING DETAILS NO. 2	
16.	SKID BENT FOOTING DETAILS NO. 3	
17.	SKID BENT FOOTING DETAILS NO. 4	
18.	SKID BENT FOOTING DETAILS NO. 5	
19.	SKID BENT FOOTING DETAILS NO. 6	
20.	SHEET NOT USED	
21.	SUPPORT AT PIER E1	
22.	SUPPORT AT PIER E1 DETAILS NO. 1	
23.	SUPPORT AT PIER E1 DETAILS NO. 2	
24.	SUPPORT AT PIER E1 DETAILS NO. 3	
25.	SUPPORT AT PIER E1 DETAILS NO. 4	
26.	SHEET NOT USED	
27.	FRAMING PLAN NO. 1	(Note 3)
28.	FRAMING PLAN NO. 2	
29.	TYPICAL SECTION	
30.	CAMBER	
31.	SHEET NOT USED	
32.	TRUSS LAYOUT NO. 1	(Note 3)
33.	TRUSS LAYOUT NO. 2	
34.	TRUSS LAYOUT NO. 3	
35.	TRUSS LAYOUT NO. 4	
36.	TRUSS JOINT DETAILS NO. 1	
37.	TRUSS JOINT DETAILS NO. 2	
38.	TRUSS JOINT DETAILS NO. 3	
39.	TRUSS JOINT DETAILS NO. 4	
40.	TRUSS JOINT DETAILS NO. 5	
41.	TRUSS JOINT DETAILS NO. 6	
42.	TRUSS JOINT DETAILS NO. 7	
43.	TRUSS JOINT DETAILS NO. 8	
44.	TRUSS JOINT DETAILS NO. 9	
45.	TRUSS JOINT DETAILS NO. 10	
46.	TRUSS JOINT DETAILS NO. 11	
47.	TRUSS JOINT DETAILS NO. 12	
48.	TRUSS JOINT DETAILS NO. 13	
49.	TRUSS JOINT DETAILS NO. 14	
50.	TRUSS JOINT DETAILS NO. 15	
51.	TRUSS JOINT DETAILS NO. 16	
52.	TRUSS JOINT DETAILS NO. 17	
53.	TRUSS JOINT DETAILS NO. 18	
54.	TRUSS JOINT DETAILS NO. 19	
55.	TRUSS JOINT DETAILS NO. 20	
56.	TRUSS JOINT DETAILS NO. 21	
57.	TRUSS JOINT DETAILS NO. 22	
58.	FLOOR BEAM DETAILS NO. 1	
59.	FLOOR BEAM DETAILS NO. 2	
60.	FLOOR BEAM DETAILS NO. 3	
61.	STRINGER DETAILS NO. 1	(Note 3)
62.	STRINGER DETAILS NO. 2	
63.	STRINGER DETAILS NO. 3	
64.	STRINGER DETAILS NO. 4	
65.	STRINGER DETAILS NO. 5	
66.	STRINGER DETAILS NO. 6	
67.	UPPER LATERAL BRACING LAYOUT NO. 1	
68.	UPPER LATERAL BRACING LAYOUT NO. 2	
69.	LOWER LATERAL BRACING LAYOUT NO. 1	
70.	LOWER LATERAL BRACING LAYOUT NO. 2	
71.	LATERAL BRACING DETAILS NO. 1	
72.	LATERAL BRACING DETAILS NO. 2	
73.	LATERAL BRACING DETAILS NO. 3	
74.	LATERAL BRACING DETAILS NO. 4	
75.	LATERAL BRACING DETAILS NO. 5	
76.	LATERAL BRACING DETAILS NO. 6	
77.	LATERAL BRACING DETAILS NO. 7	
78.	LATERAL BRACING DETAILS NO. 8	
79.	LATERAL BRACING DETAILS NO. 9	
80.	SHEET NOT USED	
81.	SHEET NOT USED	
82.	SHEET NOT USED	
83.	SHEET NOT USED	
84.	STEEL GIRDER DETAILS	(Note 3)
85.	MAN HOLE & HAND HOLE DETAILS	
86.	CONCRETE DECK DETAILS NO. 1	
87.	CONCRETE DECK DETAILS NO. 2	
88.	CONCRETE DECK DETAILS NO. 3	
89.	POUR SEQUENCE	
90.	BENT 52A EXPANSION JOINT LAYOUT	
91.	BENT 52A EXPANSION JOINT DETAILS NO. 1	
92.	BENT 52A EXPANSION JOINT DETAILS NO. 2	
93.	BENT 52A EXPANSION JOINT DETAILS NO. 3	
94.	BENT 52A EXPANSION JOINT DETAILS NO. 4	
95.	BENT 52A EXPANSION JOINT DETAILS NO. 5	
96.	BENT 52A EXPANSION JOINT DETAILS NO. 6	
97.	BENT 52A EXPANSION JOINT BARRIER NO. 1	
98.	BENT 52A EXPANSION JOINT BARRIER NO. 2	
99.	PIER E1 EXPANSION JOINT LAYOUT	
100.	PIER E1 EXPANSION JOINT DETAILS NO. 1	
101.	PIER E1 EXPANSION JOINT DETAILS NO. 2	
102.	PIER E1 EXPANSION JOINT DETAILS NO. 3	
103.	PIER E1 EXPANSION JOINT DETAILS NO. 4	
104.	PIER E1 EXPANSION JOINT DETAILS NO. 5	
105.	PIER E1 EXPANSION JOINT BARRIER NO. 1	
106.	PIER E1 EXPANSION JOINT BARRIER NO. 2	
107.	PIER E1 EXPANSION JOINT BARRIER NO. 3	
108.	PIER E1 EXPANSION JOINT BARRIER NO. 4	
109.	PIER E1 EXPANSION JOINT BARRIER NO. 5	
110.	PIER E1 EXPANSION JOINT BARRIER NO. 6	
111.	PIER E1 EXPANSION JOINT BARRIER NO. 7	
112.	JOINT SEAL ASSEMBLY	(Note 3)
113.	BEARING DETAILS NO. 1	
114.	BEARING DETAILS NO. 2	
115.	MISCELLANEOUS DETAILS NO. 1	(Note 3)
116.	MISCELLANEOUS DETAILS NO. 2	
117.	MISCELLANEOUS DETAILS NO. 3	
118.	MISCELLANEOUS DETAILS NO. 4	
119.	MISCELLANEOUS DETAILS NO. 5	
120.	EXISTING TRUSS LAYOUT NO. 1	
121.	EXISTING TRUSS LAYOUT NO. 2	
122.	EXISTING TRUSS DETAILS NO. 1	
123.	EXISTING TRUSS DETAILS NO. 2	
124.	EXISTING TRUSS DETAILS NO. 3	
125.	EXISTING TRUSS DETAILS NO. 4	
126.	EXISTING TRUSS DETAILS NO. 5	
127.	EXISTING TRUSS DETAILS NO. 6	
128.	EXISTING TRUSS DETAILS NO. 7	
129.	EXISTING TRUSS DETAILS NO. 8	
130.	EXISTING TRUSS DETAILS NO. 9	
131.	EXISTING TRUSS DETAILS NO. 10	
132.	SKID BENT LAYOUT	(Note 2)
133.	SKID BENT SECTIONS NO. 1	
134.	SKID BENT SECTIONS NO. 2	
135.	SKID BENT SECTIONS NO. 3	
136.	SKID BENT DETAILS NO. 1	
137.	SKID BENT DETAILS NO. 2	
138.	SKID BENT DETAILS NO. 3	
139.	SKID BENT DETAILS NO. 4	
140.	SKID BENT DETAILS NO. 5	
141.	SKID BENT DETAILS NO. 6	
142.	SKID BENT DETAILS NO. 7	
143.	SKID BENT DETAILS NO. 8	
144.	SKID BENT DETAILS NO. 9	
145.	SKID BENT DETAILS NO. 10	
146.	SKID BENT DETAILS NO. 11	
147.	SKID BEAM DETAILS NO. 1	
148.	SKID BEAM DETAILS NO. 2	
149.	SKID BEAM DETAILS NO. 3	
150.	SKID BEAM DETAILS NO. 4	
151.	SKID BEAM DETAILS NO. 5	
152.	SKID BEAM DETAILS NO. 6	
153.	SKID BEAM DETAILS NO. 7	
154.	SHEET NOT USED	
155.	ROLL-OUT ROLL-IN OPERATION SEQUENCE NO. 1	
156.	ROLL-OUT ROLL-IN OPERATION SEQUENCE NO. 2	
157.	ROLL-OUT ROLL-IN OPERATION SEQUENCE NO. 3	
158.	ROLL-OUT ROLL-IN OPERATION SEQUENCE NO. 4	
159.	ROLL-OUT ROLL-IN OPERATION SEQUENCE NO. 5	
160.	ROLL-OUT ROLL-IN OPERATION SEQUENCE NO. 6	
161.	ROLL-OUT ROLL-IN TOLERANCES AND DEFLECTIONS	
162.	EXISTING YB4 TRUSS LIFTING PROCEDURE	
163.	NEW ETI TRUSS SETTING PROCEDURE	
164.	TEMPORARY BEARING LAYOUT	
165.	TEMPORARY BEARING DETAILS	
166.	EXISTING YB4 TRUSS WORK PLAN NO. 1	
167.	EXISTING YB4 TRUSS WORK PLAN NO. 2	
168.	TO 200. SHEET NOT USED	
201.	LOG OF TEST BORINGS NO. 1	(Note 1)
202.	LOG OF TEST BORINGS NO. 2	
203.	LOG OF TEST BORINGS NO. 3	
204.	LOG OF TEST BORINGS NO. 4	
205.	LOG OF TEST BORINGS NO. 5	
206.	LOG OF TEST BORINGS NO. 6	
207.	LOG OF TEST BORINGS NO. 7	
208.	LOG OF TEST BORINGS NO. 8	
209.	LOG OF TEST BORINGS 1 OF 17	
210.	LOG OF TEST BORINGS 3 OF 17	
211.	LOG OF TEST BORINGS 5 OF 17	
212.	LOG OF TEST BORINGS 6 OF 17	
213.	LOG OF TEST BORINGS 16 OF 17	
214.	LOG OF TEST BORINGS 17 OF 17	

Caltrans Metric

DIST	COUNTY	ROUTE	KILOMETER POST TOTAL PROJECT	SHEET NO	TOTAL
04	SF	80	12.6/13.2		

REGISTERED CIVIL ENGINEER

4-7-08
PLANS APPROVAL DATE

REGISTERED PROFESSIONAL ENGINEER — Ajaya Kumar Sah — No. C59203 — Exp. 06/30/09 — CIVIL — STATE OF CALIFORNIA

The State of California or its officers or agents shall not be responsible for the accuracy or completeness of electronic copies of this plan sheet.

T.Y. LIN / MOFFATT & NICHOL
Two Harrison Street, Suite 500
San Francisco, CA 94105

CONTRACT NO. 04-0120R4

CONTRACT CHANGE ORDER NO. 146

SHEET 21 OF 84

Notes:

1. Sheets pertaining to 100% Concrete Substructure submittal (Submittal Date 11-5-07).
2. Sheets pertaining to 100% Skid Bent and Skid Beam submittal (Submittal Date 3-15-08).
3. Sheets pertaining to 100% Truss submittal (Submittal Date 4-7-08).

ALL DIMENSIONS ARE IN MILLIMETERS UNLESS OTHERWISE SHOWN

SAN FRANCISCO OAKLAND BAY BRIDGE
EAST SPAN SEISMIC SAFETY PROJECT

EAST TIE-IN

INDEX TO PLANS

T. Ostrom/M. Whitesides/A. Akinsanya	DESIGN	BY M. Sah	CHECKED S. Cheng	PREPARED FOR THE STATE OF CALIFORNIA DEPARTMENT OF TRANSPORTATION	M. Sah PROJECT ENGINEER
DESIGN OVERSIGHT	DETAILS	BY S. Lee	CHECKED A. Lee		S. Abbas PROJECT MANAGER
SIGN OFF DATE	QUANTITIES	BY H. Nelson	CHECKED A. Lee		

BRIDGE NO. 34-0006 (TEMP.)
KILOMETER POST 12.6

DESIGN DETAIL SHEET (METRIC) REV. 3/4/99 — #DATE# #TIME# — Pen Table File

ORIGINAL SCALE IN MILLIMETERS FOR REDUCED PLANS 0 10 20 30 40 50 60 70 80 90 100

CU EA 0120R4

FILE => g:\pb\b04-0120r1\e11\dgn\ab11p-1.dgn

DISREGARD PRINTS BEARING EARLIER REVISION DATES? →

REVISION DATES (PRELIMINARY STAGE ONLY)

SHEET	OF
2	214

DATE PLOTTED => 4/7/2008 — TIME PLOTTED => 13:48:18 PM

USERNAME => A.Ak

100% PS&E

GENERAL NOTES (Cont.)

STRUCTURAL STEEL: All steel shall be ASTM A709M, Grade 345 unless noted otherwise. Charpy V-notch testing shall use Zone 2 requirements.

Tube steel (HSS sections) shall conform to ASTM A500 Grade B or ASTM A847.

Members marked "FCM" are Fracture Critical Members. All connections to FCM's are Fracture Critical.

FASTENERS: Unless noted otherwise, all bolts used in truss superstructure shall be ASTM A490 and all bolts used in skid bents and skid beams shall be ASTM A325. Threads shall be excluded from the shear plane.

64mm D'a Bolt = 2½" Dia Bolt
51mm D'a Bolt = 2" Dia Bolt
32mm D'a Bolt = 1¼" Dia Bolt
29mm D'a Bolt = 1⅛" Dia Bolt
25mm D'a Bolt = 1" Dia Bolt
22mm D'a Bolt = ⅞" Dia Bolt
19mm D'a Bolt = ¾" Dia Bolt
16mm D'a Bolt = ⅝" Dia Bolt

All high strength ASTM A325 bolts shall be hot-dip galvanized unless noted otherwise.

All welded shear studs shall be made from cold drawn bar stock conforming to the requirements of ASTM A108.

Anchorage rods shall conform to ASTM F1554.

CONNECTIONS: Unless noted otherwise, all structural steel connections using high strength bolts ASTM A325 or ASTM A490 shall be slip-critical, Class B contact surfaces.

The number of bolts shall be the same as the number of bolt holes shown.

TRUSS, FLOOR BEAMS AND LATERAL BRACING:
Bolts = 29mm Dia (unless noted otherwise)
Bolt holes = 31mm Dia (unless noted otherwise)
Min spacing = 102mm
Min edge distance = 50mm
Min end distance = 75mm

STRINGERS:
Bolts = 25mm Dia (unless noted otherwise)
Bolt holes = 27mm Dia (unless noted otherwise)
Min spacing = 75mm (unless noted otherwise)
Min edge distance = 44mm (unless noted otherwise)
Min end distance = 65mm (unless noted otherwise)

SKID BENTS AND SKID BEAMS:
Bolts = 32mm Dia (unless noted otherwise)
Bolt holes = 34mm Dia (unless noted otherwise)
Min spacing = 96mm
Min edge distance = 56mm
Min end distance = 80mm

GENERAL:

1. All bolted connections shown are for field bolting. Shop bolting may be used subject to approval of the Engineer.
2. All welds that join at least one plate designated as fracture critical shall be considered fracture critical welds, regardless of the direction of stress. All welded flange splices in floor beams shall be considered fracture critical welds, regardless of the direction of stress.
3. For truss superstructure, primary components of main members are:
   a. Truss chord, vertical and diagonal web and flange plates, splice plates, doubler plates, vertical and horizontal stiffeners, bearing stiffeners, gusset plates and diaphragm plates.
   b. Floor beam flange and web plates, transverse and cross frame stiffeners, bearing stiffeners.
   c. Stringer and end beam flanges and webs, stiffener plates and continuity plates.
4. All members not designated as either FCMs or main members are secondary members.
5. All gusset plates and connection material, including connection plate and angles, for the connection of at least one fracture critical member shall be considered fracture critical members. This includes stiffener plates used as connection plates.
6. Dimensions shown on the plans are horizontal and vertical unless noted otherwise.
7. The truss geometry and elevations shown on these plans are given for the final condition, after camber and under full dead load. All truss vertical members shall be plumb.
8. All floor beams and stringers shall be placed with webs plumb.
9. Hand holes shown in skid bents and truss lateral bracing are approximate. Actual locations shall be established by the Contractor based on his intended assembly method. Proposed hand hole locations, including any proposed additional hand holes, shall be submitted to the Engineer for approval.
10. Gaps less than or equal to 2mm do not require filler plates.
11. Actual dimensions of gusset plates shall be developed by the Contractor based on required number of bolts, geometry, and details shown on the plans.
12. The bearings shall be positioned as shown. Shim stacks shall be plumb and level.
13. The location of all utilities shall be field verified by the Contractor prior to any construction.
14. The Contractor shall be responsible for the stability of the structure during all phases of construction.
15. Temporary supports shall be gradually released to prevent impact or undue stresses in the structure.
16. All lateral bracing HSS sections shall be capped at ends with 6mm end plate with seal weld ground smooth. Horizontal hollow structural members in skid bents shall have 25mm Dia weep holes at 2.0 meters on center at bottom of member.
17. The Contractor shall verify all controlling field dimensions before ordering or fabricating any materials.

Caltrans Metric

DIST	COUNTY	ROUTE	KILOMETER POST TOTAL PROJECT	SHEET NO.	TOTAL
04	SF	80	12.6/13.2		

Lloyd Allen
REGISTERED CIVIL ENGINEER

4-7-08
PLANS APPROVAL DATE

REGISTERED PROFESSIONAL ENGINEER — Solid Abbas — No. C 055274 — Exp. 12/31/09 — CIVIL — STATE OF CALIFORNIA

The State of California or its officers or agents shall not be responsible for the accuracy or completeness of electronic copies of this plan sheet.

T.Y. LIN / MOFFATT & NICHOL
Two Harrison Street, Suite 500
San Francisco, CA 94105

CONTRACT NO. 04-0120R4

CONTRACT CHANGE ORDER NO 140

SHEET 22 OF 84

ALL DIMENSIONS ARE IN MILLIMETERS UNLESS OTHERWISE SHOWN

SAN FRANCISCO OAKLAND BAY BRIDGE
EAST SPAN SEISMIC SAFETY PROJECT

EAST TIE-IN

GENERAL NOTES NO. 2

T. Ostrom/M. Whiteside/A. Akinsanya	DESIGN	BY S. Abbas, M. Soh	CHECKED S. Chang, H. Najm	PREPARED FOR THE STATE OF CALIFORNIA DEPARTMENT OF TRANSPORTATION	M. Soh PROJECT ENGINEER
DESIGN OVERSIGHT	DETAILS	BY S. Lee	CHECKED M. Irwin, A. Lee		S. Abbas PROJECT MANAGER
SIGN OFF DATE	QUANTITIES	BY H. Nelson	CHECKED A. Lee		12.6

BRIDGE NO. 34-0005 (TEMP.)
KILOMETER POST

DESIGN DETAIL SHEET ARETROREV. 3/1/98 ADATE# MTIME# Pen Table File

ORIGINAL SCALE IN MILLIMETERS FOR REDUCED PLANS 0 10 20 30 40 50 60 70 80 90 100

CU
EA 0120R4

DISREGARD PRINTS BEARING EARLIER REVISION DATES!

REVISION DATES (PRELIMINARY STAGE ONLY)

SHEET	OF
4	214

FILE => p:\bb\04-0120r\et1\dgn\eagen02.dgn

USERNAME => Alee

DATE PLOTTED => 4/7/2008

TIME PLOTTED => 8:43:22 AM

ENGINEER'S SEAL

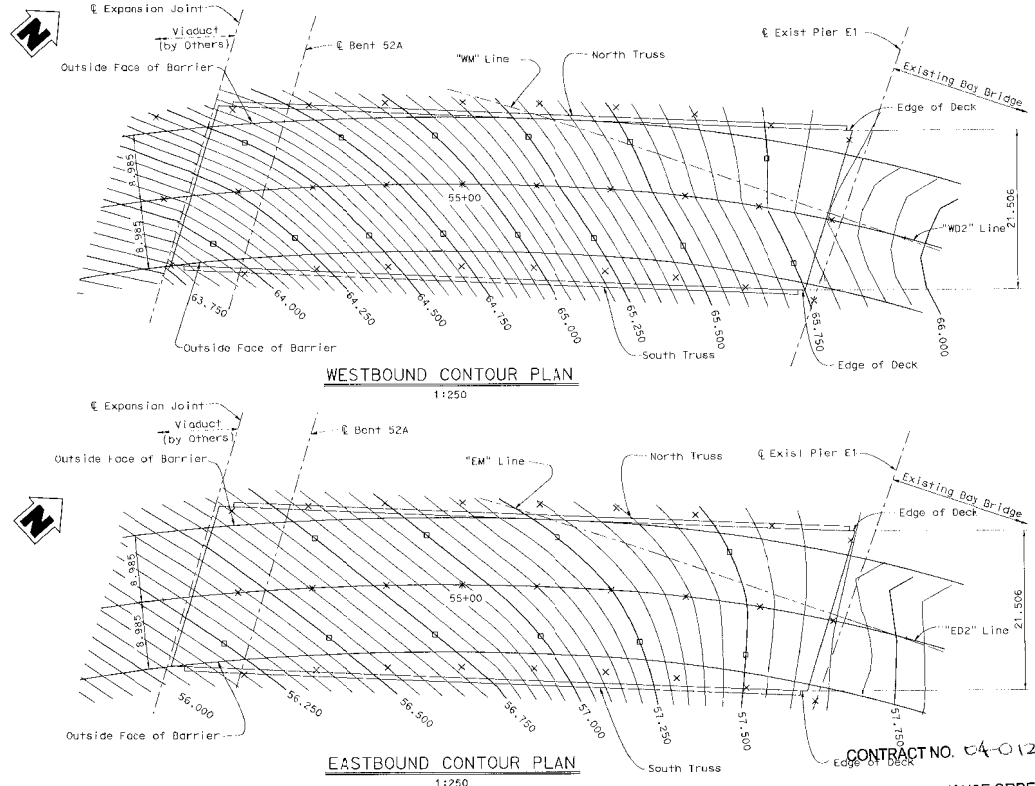

WESTBOUND CONTOUR PLAN

1:250

EASTBOUND CONTOUR PLAN

1:250

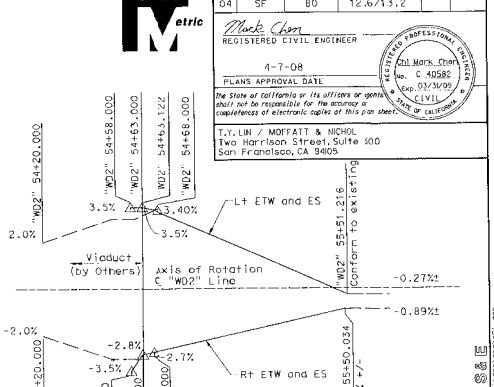

"WD2" LINE SUPERELEVATION DIAGRAM

No Scale

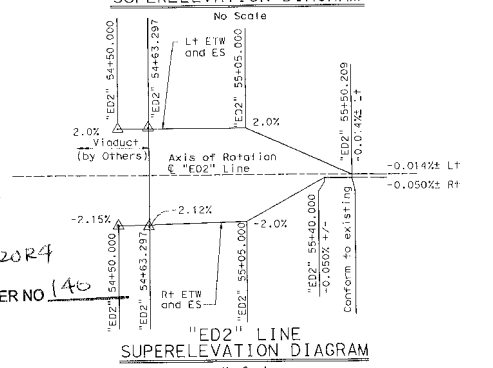

"ED2" LINE SUPERELEVATION DIAGRAM

No Scale

LEGEND:

⊔ - Indicates 250 mm contours

× = 10 m intervals along station line

Notes:

1. Contours do not include camber.
2. Contour interval is 50 mm.
3. Contours are shown for top of wearing surface (overlay) elevation. Elevation of concrete is 32 mm lower than shown.
4. The Contractor shall verify all controlling field dimensions before ordering or fabricating any materials.

CONTRACT NO. 04-0120R4

CONTRACT CHANGE ORDER NO 140

SHEET 23 OF 84

ALL DIMENSIONS ARE IN METERS UNLESS OTHERWISE SHOWN

DIST	COUNTY	ROUTE	KILOMETER POST TOTAL PROJECT	SHEET NO	TOTAL
04	SF	80	12.6/13.2		

Mark Chan
REGISTERED CIVIL ENGINEER

4-7-08
PLANS APPROVAL DATE

Chi Mark Chan, No. C 40582, Exp. 03/31/09, CIVIL, State of California

The State of California or its officers or agents shall not be responsible for the accuracy or completeness of electronic copies of this plan sheet.

T.Y. LIN / MOFFATT & NICHOL
Two Harrison Street, Suite 500
San Francisco, CA 94105

T. Ostrom/M. Whiteside/A. Akinsanya		DESIGN	BY W. Chan, P. Chou	CHECKED S. Cheng, H. Najm	PREPARED FOR THE STATE OF CALIFORNIA DEPARTMENT OF TRANSPORTATION
DESIGN OVERSIGHT		DETAILS	BY S. Lee	CHECKED A. Lee	
SIGN OFF DATE		QUANTITIES	BY H. Nelson	CHECKED A. Lee	

M. Sah	PROJECT ENGINEER
S. Abbas	PROJECT MANAGER
CU	
E.A. 0120R4	

BRIDGE NO. 34-0006 TIEMP1
KILOMETER POST 12.6

SAN FRANCISCO OAKLAND BAY BRIDGE
EAST SPAN SEISMIC SAFETY PROJECT

EAST TIE-IN

DECK CONTOURS

DESIGN DETAIL SHEET (METRIC) REV. 3/1/99 #DATE# #TIME# Pen Table File

ORIGINAL SCALE IN MILLIMETERS FOR RECORDED PLANS 0 10 20 30 40 50 60 70 80 90 100

FILE => \\Sb\04-0120R1\e\Tidgn\tidrk01.dgn

DISREGARD PRINTS BEARING EARLIER REVISION DATES

REVISION DATES (PRELIMINARY STAGE ONLY)

SHEET 5 OF 214

USERNAME => A.AS

DATE PLOTTED => 5:49:28 PM

DATE PLOTTED => 4/7/2008

DIST	COUNTY	ROUTE	KILOMETER POST TOTAL PROJECT	SHEET NO.	TOTAL
04	SF	80	12.6/13.2		

REGISTERED CIVIL ENGINEER — PLANS APPROVAL DATE 4-7-08

Sajid Abbas No. C 055274 Exp. 12/31/09 CIVIL — REGISTERED PROFESSIONAL ENGINEER — STATE OF CALIFORNIA

The State of California or its officers or agents shall not be responsible for the accuracy or completeness of electronic copies of this plan sheet.

T.Y. LIN / MOFFATT & NICHOL
Two Harrison Street, Suite 500
San Francisco, CA 94105

CONTRACT NO. 04-0120R4

CONTRACT CHANGE ORDER NO. 140

SHEET 24 OF 84

Note: Information shown is applicable to North & South Trusses

TRUSS FRACTURE CRITICAL AND MAIN MEMBER LOCATIONS

ELEVATION
1:200

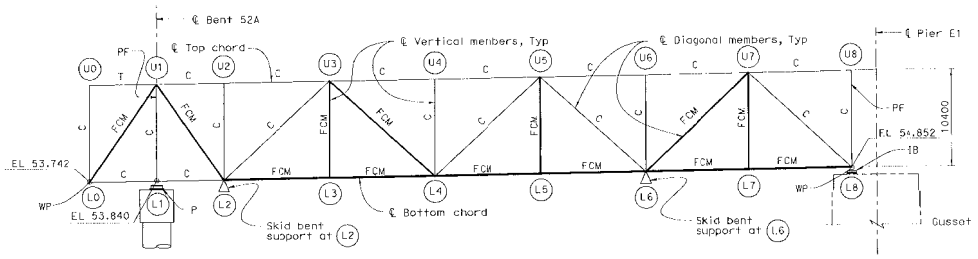

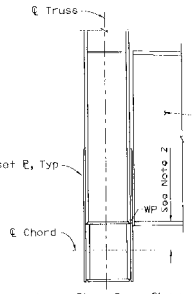

Lower Floor Beam Shown
SECTION A-A

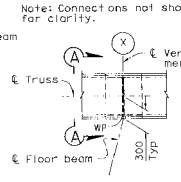

PLAN
North Truss Shown

DETAIL 1-FLOOR BEAM WP LOCATION
No Scale

LEGEND:

(X)	Indicates truss panel and floor beam number (upper & lower deck)
IB	Indicates isolator bearing and sliding bearing
P	Indicates bearing pinned longitudinally and transversely
PF	Indicates Portal Frame location
FCM	Indicates Fracture Critical Member
T	Indicates Main Tension Member (Non FCM)
C	Indicates Main Compression Member
WP	Work Point at intersection of truss member centerlines unless noted otherwise for floor beams
------	Indicates Existing Structure

Notes:

1. For upper and lower deck floor framing and Detail 2, see "Framing Plan No. 2" sheet.
2. Floor beam connection work point is at elevation of bottom of floor beam web (top of bottom flange) and 300 mm measured horizontally perpendicular from centerline truss at all truss vertical member centerlines.
3. Dimensions given are in the horizontal and vertical planes. Fabricator to develop actual dimensions with respect to grade, superelevation, deflection and camber.
4. Contractor shall verify all controlling field dimensions before ordering or fabricating any material.
5. Floor beams (U1), (L1), (U8) and (L8) shall be Fracture Critical Members. For all other floor beams, the web plates below mid-depth and bottom flange plates shall be Fracture Critical Members.

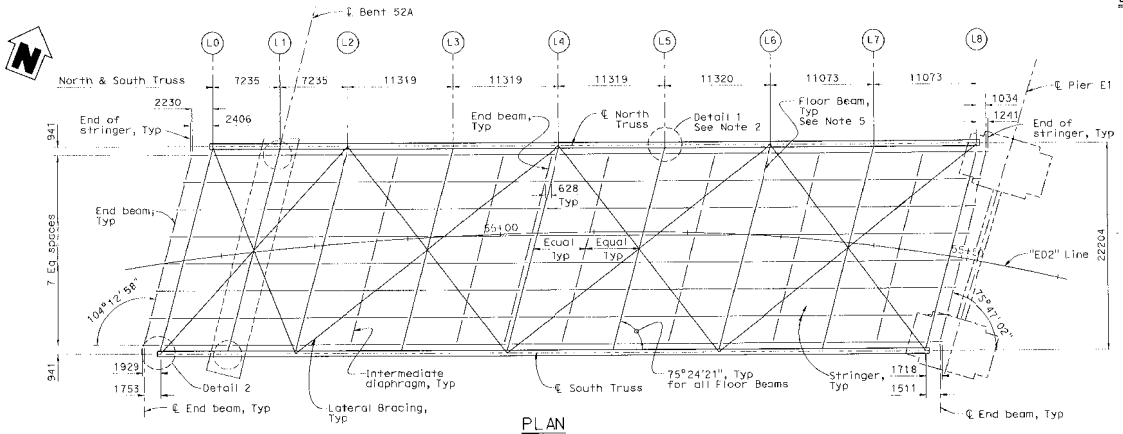

PLAN
1:200

Lower Deck shown, Upper Deck similar

ALL DIMENSIONS ARE IN MILLIMETERS UNLESS OTHERWISE SHOWN

SAN FRANCISCO OAKLAND BAY BRIDGE
EAST SPAN SEISMIC SAFETY PROJECT

EAST TIE-IN

FRAMING PLAN NO. 1

T. Ostrom/M. Whiteside/A. Akinsanya	DESIGN	BY S. Abbas, N. Soh, C. Redfield	CHECKED S. Cheng, H. Najm	PREPARED FOR THE STATE OF CALIFORNIA DEPARTMENT OF TRANSPORTATION	N. Soh PROJECT ENGINEER
DESIGN OVERSIGHT	DETAILS	BY A. Sudhausen, S. Lee	CHECKED M. Irwin, A. Lee		S. Abbas PROJECT MANAGER
SIGN OFF DATE	QUANTITIES	BY H. Nelson	CHECKED A. Lee		

BRIDGE NO. 34-0006 (TEMP.) KILOMETER POST 12.6

CU EA 0120R4

DESIGN DETAIL SHEET (METRIC) REV. 3/1/99 — DGN File: ⇔USER⇔ ⇔TIME⇔ Pen Table File

ORIGINAL SCALE IN MILLIMETERS FOR MODIFIED PLANS 0 10 20 30 40 50 60 70 80 90 100

FILE => p:\bb\04-012001\ef1\dgn\offrp01.dgn

DISREGARD PRINTS BEARING EARLIER REVISION DATES

REVISION DATES (PRELIMINARY STAGE ONLY) — DATE | BY

SHEET 27 OF 214

DATE PLOTTED => 4/7/2008 — USERNAME => ALEX

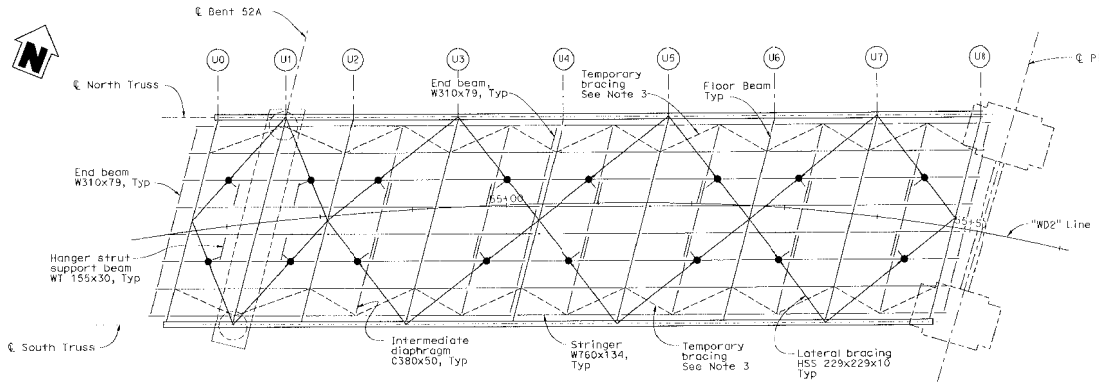

UPPER DECK PLAN

1:200

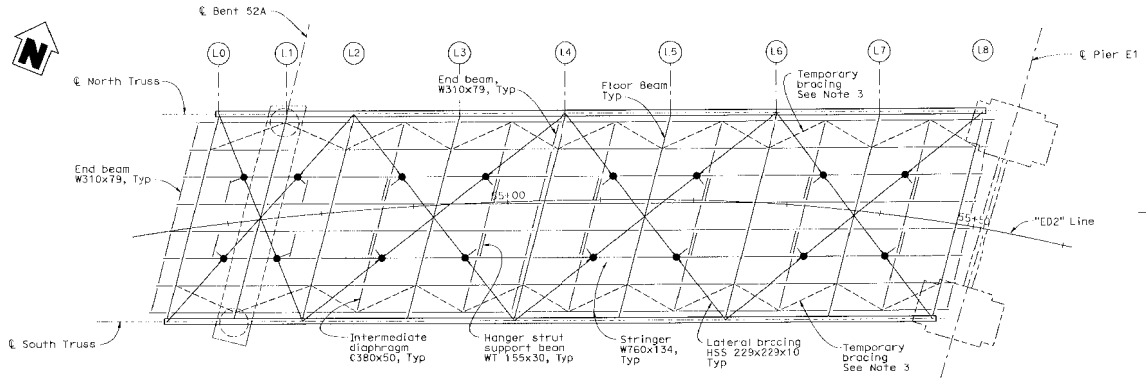

LOWER DECK PLAN

1:200

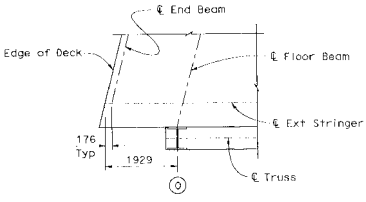

Note: West end of South Truss shown, other locations similar.

DETAIL 2

1:50

DIST	COUNTY	ROUTE	KILOMETER POST TOTAL PROJECT	SHEET NO	TOTAL
04	SF	80	12.6/13.2		

REGISTERED CIVIL ENGINEER

4-7-08

PLANS APPROVAL DATE

The State of California or its officers or agents shall not be responsible for the accuracy or completeness of electronic copies of this plan sheet.

REGISTERED PROFESSIONAL ENGINEER Salid Abbas No. C 055274 Exp. 12/31/09 CIVIL STATE OF CALIFORNIA

T.Y. LIN / MOFFATT & NICHOL
Two Harrison Street, Suite 500
San Francisco, CA 94105

CONTRACT NO. 04-0120R4

CONTRACT CHANGE ORDER NO 140

SHEET 25 OF 84

LEGEND:

(X) Indicates floor beam number (Upper & Lower Deck)

Indicates Existing Structure

Indicates Hanger Strut Location

Notes:

1. For floor beam type and details, see "Typical Section" sheet and "Floor Beam Details" sheets.
2. For lateral bracing hanger strut details, see "Lateral Bracing Details No. 8" sheet.
3. Contractor shall provide temporary bracing during concrete deck casting. Minimum one pair each between all floor beams in the north and south Stringer bays.

ALL DIMENSIONS ARE IN MILLIMETERS UNLESS OTHERWISE SHOWN

SAN FRANCISCO OAKLAND BAY BRIDGE
EAST SPAN SEISMIC SAFETY PROJECT

EAST TIE-IN

FRAMING PLAN NO. 2

T. Ostrom/M. Whiteside/A. Akinsanya
DESIGN OVERSIGHT

SIGN OFF DATE

DESIGN DETAIL SHEET (METRIC) REV. 3/1/98
WDATE# #TIME# Pen Table File

	BY	CHECKED
DESIGN	S. Abbas, M. Sah, C. Redfield	S. Cheng, H. Najm
DETAILS	A. Sudhausen, S. Lee	M. Irwin, A. Lee
QUANTITIES	H. Nelson	A. Lee

ORIGINAL SCALE IN MILLIMETERS FOR REDUCED PLANS 0 10 20 30 40 50 60 70 80 90 100

PREPARED FOR THE STATE OF CALIFORNIA DEPARTMENT OF TRANSPORTATION

M. Sah
PROJECT ENGINEER
S. Abbas
PROJECT MANAGER

BRIDGE NO. 34-0006 (TEMP)
KILOMETER POST 12.6

CU
EA 0120R4

DISREGARD PRINTS BEARING EARLIER REVISION DATES

REVISION DATES (PRELIMINARY STAGE ONLY) 11/1/07 6/1/06

SHEET 28 OF 214

FILE => p:\bb\04-0120R1\eti\dgn\affrp02.dgn

100% PS&E

FILE => p:\bb\04-0120R1\eti\dgn\affrp02.dgn TIME PLOTTED => 8:48:36 PM DATE PLOTTED => 4/7/2008 USERNAME => ALEE

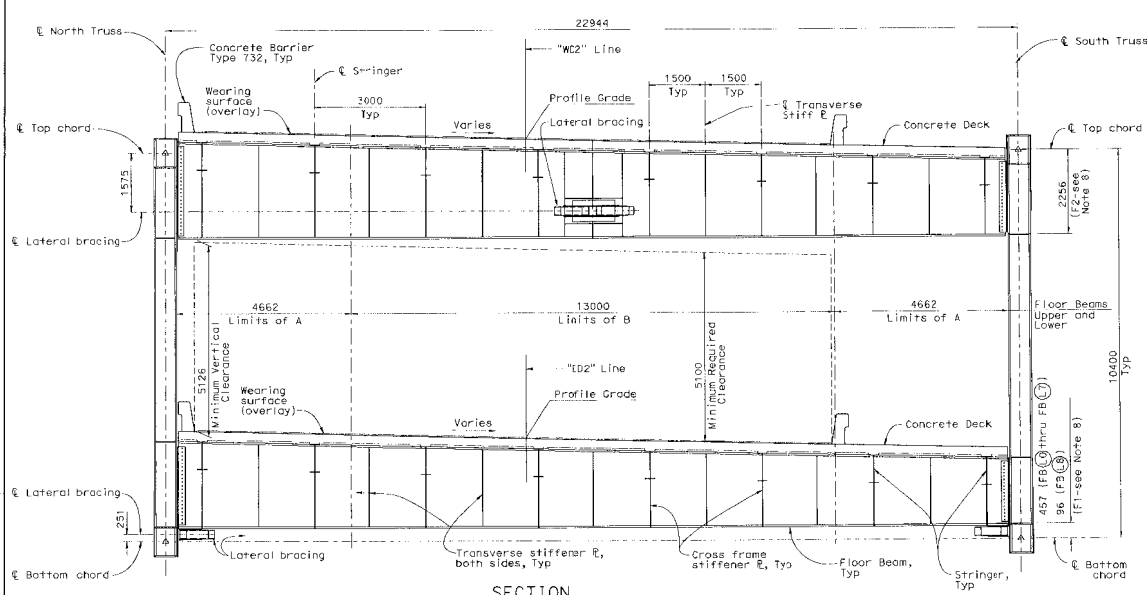

SECTION

1:50

Section along Floor Beam (U4) and (L4) shown

Horizontal dimensions are parallel to floor beam

Floor Beam Dimensions (mm)

Floor Beam No.	Web d N. end	Web d S. end	Web t_w	A Flanges b_f	A Flanges t_f	3 Flanges Top b_f	3 Flanges Top t_f	3 Flanges Bottom b_f	3 Flanges Bottom t_f
(U0)	2410	1600	16	400	51	400	51	500	51
(U1)	2404	1648	2-19	664	51	664	51	664	51
(U2)	2415	1701	16	400	51	400	51	500	51
(U3)	2453	1821	16	400	51	400	51	500	51
(U4)	2505	1961	16	400	51	400	51	500	51
(U5)	2557	2110	16	400	51	400	51	500	51
(U6)	2573	2239	16	400	51	400	51	500	51
(U7)	2550	2333	16	400	51	400	51	500	51
(U8)	2481	2385	2-19	664	51	664	51	664	51
(L0)	2423	1553	16	400	51	400	51	500	51
(L1)	2430	1569	2-16	664	51	664	51	664	51
(L2)	2441	1582	16	400	51	400	51	500	51
(L3)	2459	1613	16	400	51	400	51	500	51
(L4)	2469	1647	16	400	51	400	51	500	51
(L5)	2438	1725	16	400	51	400	51	500	51
(L6)	2099	1830	16	400	51	400	51	500	51
(L7)	2050	1924	16	400	51	400	51	500	51
(L8)	2342	2310	2-25	1000	51	1000	51	1000	51

CONTRACT NO. 04-0120R4

CONTRACT CHANGE ORDER NO 140

SHEET 26 OF 84

Notes:

1. For floor beam details, see "Floor Beam Details" sheets.
2. For lateral bracing, see "Lateral Bracing Layout" sheets.
3. For concrete deck details, see "Concrete Deck Details" sheets.
4. For stringer details, see "Stringer Details" sheets.
5. All dimensions are measured along the centerline of the floor beam unless noted otherwise.
6. For additional dimensions, see "Framing Plan", "Truss Layout" and "General Plan" sheets.
7. For truss top & bottom chord centerline elevations, see "Framing Plan No. 1" sheet.
8. Dimension F1 and F2 are measured vertically from the centerline truss chord to the floor beam work point, see Detail 1 on "Framing Plan No. 1" sheet.

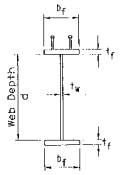

TYPICAL FLOOR BEAM SECTION

No Scale

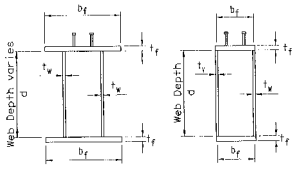

BOX FLOOR BEAM SECTION

No Scale

ALL DIMENSIONS ARE IN MILLIMETERS UNLESS OTHERWISE SHOWN

SAN FRANCISCO OAKLAND BAY BRIDGE
EAST SPAN SEISMIC SAFETY PROJECT

EAST TIE-IN

TYPICAL SECTION

DIST	COUNTY	ROUTE	KILOMETER POST TOTAL PROJECT	SHEET NO	SHEET TOTAL
04	SF	80	12.6/13.2		

Ingrid Allen
REGISTERED CIVIL ENGINEER
4-7-08
PLANS APPROVAL DATE

Solid Abbas No. C 055274 Exp. 12/31/09 CIVIL

The State of California or its officers or agents shall not be responsible for the accuracy or completeness of electronic copies of this plan sheet.

T.Y. LIN / MOFFATT & NICHOL
Two Harrison Street, Suite 500
San Francisco, CA 94105

PREPARED FOR THE STATE OF CALIFORNIA DEPARTMENT OF TRANSPORTATION

DESIGN	S. Abba, M. Soh, C. Redfield	CHECKED S. Cheng, H. Najm	M. Soh PROJECT ENGINEER
DETAILS	A. Sidhausen, S. Lee	CHECKED M. Irwin, A. Lee	S. Abbas PROJECT MANAGER
QUANTITIES	H. Nelson	CHECKED A. Lee	

T. Ostrom/M. Whiteside/A. Akinsanya DESIGN OVERSIGHT

SIGN OFF DATE

BRIDGE NO. 34-0008 (TEMP) KILOMETER POST 12.6

CU EA 01204

DESIGN DETAIL SHEET (METRIC) REV. 3/7/08 #DATE# #TIME# Pen Table File

ORIGINAL SCALE IN MILLIMETERS FOR REDUCED PLANS 0 10 20 30 40 50 60 70 80 90 100

DISREGARD PRINTS BEARING EARLIER REVISION DATES →

REVISION DATES (PRELIMINARY STAGE ONLY)

SHEET 29 OF 214

FILE => p:\bb\04-012001\ett\dgn\ettyp01.dgn

DATE PLOTTED => 4/7/2008 8:49:41 PM

USERNAME => ALAB

TIME PLOTTED => 12:15:04 @ 100%

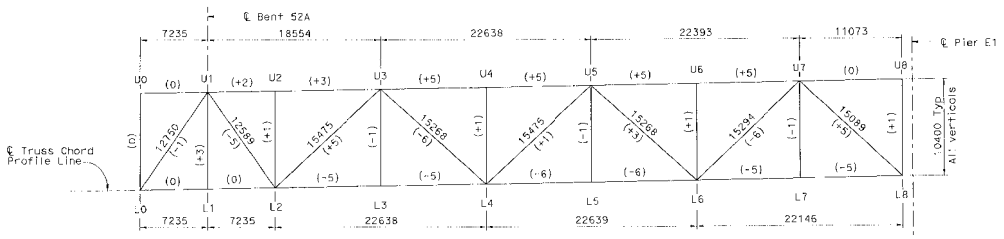

GEOMETRIC LENGTHS AND CHANGES IN LENGTH FOR CAMBER DUE TO DEAD LOAD AND SUPERIMPOSED DEAD LOAD

(North and South Truss Same)

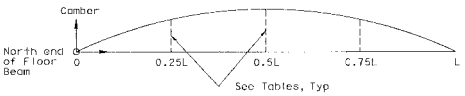

FLOOR BEAM AND STRINGER CAMEER DIAGRAM

No Scale

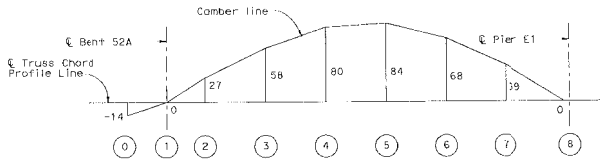

TRUSS CAMBER DIAGRAM

No Scale

Notes:

1. Numbers in parentheses are truss member length changes required for camber, in mm. Positive values mean members shall be fabricated longer than geometric length between adjacent joints and negative values mean members shall be fabricated shorter.
2. The truss shall be cambered for full dead load as shown on the camber diagram.
3. Total anticipated span elongation of the lower truss chord between permanent bearings under full dead load is 28mm. The expansion bearing shall be offset in the span direction to account for elongation, see "Bearing Details" sheets. Full dead load includes steel truss, steel deck framing and bracing, concrete deck slab, wearing surface and concrete barriers.

Upper Floor Beams

Camber Table	FB0			FB1			FB2			FB3			FB4			FB5			FB6			FB7			FB8		
	0.25L	0.5L	0.75L	0.25L	0.5L	0.75L	0.25L	0.5L	0.75L	0.25L	0.5L	0.75L	0.25L	0.5L	0.75L	0.25L	0.5L	0.75L	0.25L	0.5L	0.75L	0.25L	0.5L	0.75L	0.25L	0.5L	0.75L
Steel DL	3	4	3	1	2	2	3	4	3	2	4	3	3	4	3	2	3	2	2	3	2	2	3	2	1	1	1
Concrete DL	4	6	5	2	3	3	7	10	8	8	12	9	7	11	8	7	10	7	6	9	7	6	8	6	2	3	2
Superimposed DL	1	1	1	1	1	1	1	2	1	2	2	2	2	2	2	1	2	2	1	2	2	1	2	1	0	1	1
Shrinkage	3	5	4	2	3	2	3	4	3	3	5	3	3	4	3	3	4	3	3	4	3	3	4	3	2	3	2
Total	11	16	12	6	10	7	14	20	15	15	23	17	14	21	16	13	19	14	13	18	13	11	16	12	5	7	5

Lower Floor Beams

Camber Table	FB0			FB1			FB2			FB3			FB4			FB5			FB6			FB7			FB8		
	0.25L	0.5L	0.75L	0.25L	0.5L	0.75L	0.25L	0.5L	0.75L	0.25L	0.5L	0.75L	0.25L	0.5L	0.75L	0.25L	0.5L	0.75L	0.25L	0.5L	0.75L	0.25L	0.5L	0.75L	0.25L	0.5L	0.75L
Steel DL	3	4	3	1	1	1	3	4	3	3	5	4	3	4	3	3	5	4	3	4	3	3	4	3	1	2	1
Concrete DL	5	7	5	2	3	2	9	13	10	10	15	11	10	15	11	10	15	11	10	14	10	8	12	8	2	2	2
Superimposed DL	1	1	1	1	1	1	2	2	2	2	3	2	2	3	2	2	3	2	2	3	2	2	2	2	0	1	0
Shrinkage	4	6	4	3	4	3	3	5	4	4	5	4	3	5	4	3	5	3	4	5	4	3	5	3	2	3	2
Total	12	18	13	6	9	6	17	24	18	20	29	21	19	27	20	19	27	20	18	26	19	16	23	16	5	7	5

CONTRACT NO. 04-0120R4

CONTRACT CHANGE ORDER NO 146

SHEET 27 OF 84

11-Meter Span Stringers

(Between FBs ② to ⑧, Typical Upper and Lower Decks)

		Camber (mm)		
		0.25L	0.5L	0.75L
Steel DL		1	1	1
Concrete DL	Ext stringer	4	5	4
	Int stringer	8	10	8
Superimposed DL	Ext stringer	1	1	1
	Int stringer	2	2	2
Total	Ext stringer	5	7	5
	Int stringer	10	13	10

DIST	COUNTY	ROUTE	KILOMETER POST TOTAL PROJECT	SHEET NO	TOTAL
04	SF	80	12.6/13.2		

REGISTERED CIVIL ENGINEER

4-7-08

PLANS APPROVAL DATE

The State of California or its officers or agents shall not be responsible for the accuracy or completeness of electronic copies of this plan sheet.

REGISTERED PROFESSIONAL ENGINEER — David Griffith — No. C49125 — Exp. 09/30/08 — CIVIL — STATE OF CALIFORNIA

T.Y. LIN / MOFFATT & NICHOL
Two Harrison Street, Suite 300
San Francisco, CA 94105

ALL DIMENSIONS ARE IN MILLIMETERS UNLESS OTHERWISE SHOWN

SAN FRANCISCO OAKLAND BAY BRIDGE
EAST SPAN SEISMIC SAFETY PROJECT

EAST TIE-IN

CAMBER

T. Ostrom/M. Whiteside/A. Akinsanya — DESIGN OVERSIGHT — SIGN OFF DATE

DESIGN — BY D. Griffith, M. Yu — CHECKED S. Cheng, H. Najm
DETAILS — BY V. Ortega — CHECKED A. Lee
QUANTITIES — BY H. Nelson — CHECKED A. Lee

PREPARED FOR THE STATE OF CALIFORNIA DEPARTMENT OF TRANSPORTATION

M. Soh — PROJECT ENGINEER
S. Abbas — PROJECT MANAGER

BRIDGE NO. 34-0006 (TEMP) — KILOMETER POST 12.6

CU EA 0120R4

DESIGN DETAIL SHEET (METRIC) (REV. 3/7/08) #DATE# #TIME# Pen Table File

ORIGINAL SCALE IN MILLIMETERS FOR PLOTTED PLANS 0 10 20 30 40 50 60 70 80 90 100

DISREGARD PRINTS BEARING EARLIER REVISION DATES →

REVISION DATES (PRELIMINARY STAGE ONLY) — DATE 4/7/08

SHEET 30 OF 214

FILE => j:\fb\04-0120r4\en\dgn\sigcam.dgn

DATE PLOTTED => 7/7/2008 — TIME PLOTTED => 13:49:45 PM

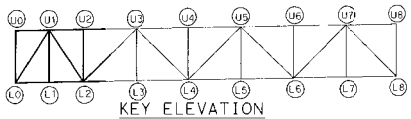

KEY ELEVATION

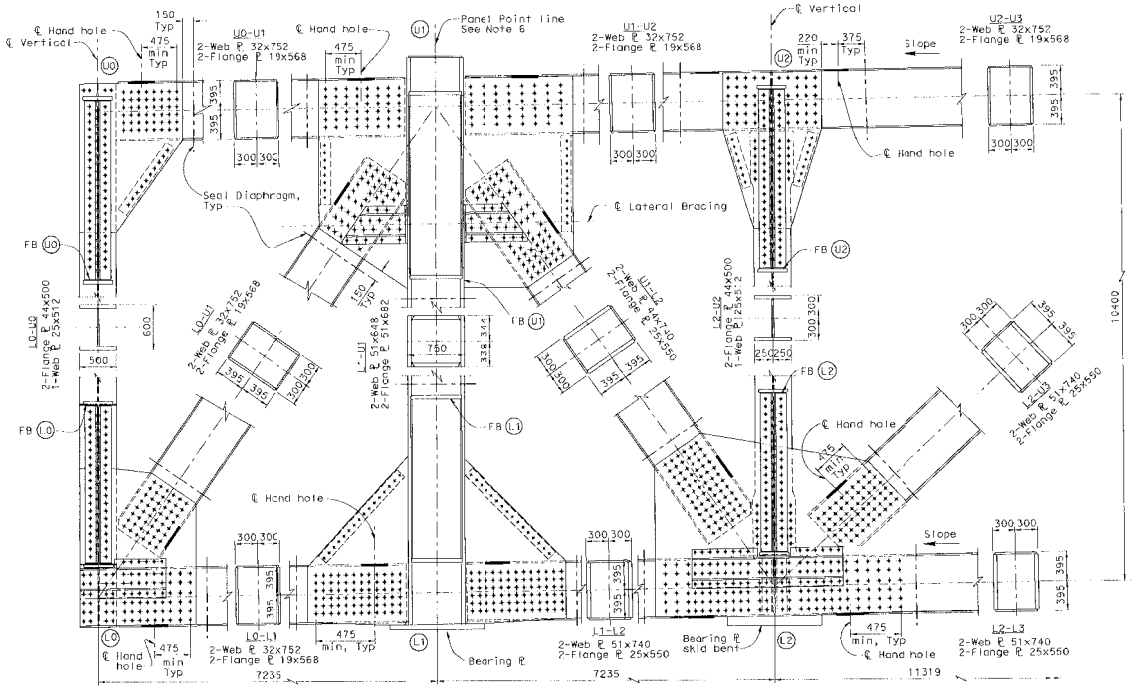

INSIDE ELEVATION NORTH TRUSS

Scale 1:25

DIST	COUNTY	ROUTE	KILOMETER POST TOTAL PROJECT	SHEET No	TOTAL
04	SF	80	12.6/13.2		

REGISTERED CIVIL ENGINEER

4-7-08

PLANS APPROVAL DATE

The State of California or its officers or agents shall not be responsible for the accuracy or completeness of electronic copies of this plan sheet.

REGISTERED PROFESSIONAL ENGINEER David Griffith No. C49125 Exp. 9/30/08 CIVIL STATE OF CALIFORNIA

T.Y.LIN / MOFFATT & NICHOL
Two Harrison Street, Suite 500
San Francisco, CA 94105

CONTRACT NO. 04-0120R4

CONTRACT CHANGE ORDER NO 140

SHEET 28 OF 84

Notes:

1. Elevation of North Truss shown, elevation of South Truss similar.
2. For general truss notes, see "General Notes No. 2" and "Truss Joint Details No. 1" sheet.
3. For hand hole details, see "Man Hole & Hand Hole Details" sheet.
4. Dimensions given are in the horizontal and vertical planes. Fabricator shall develop dimensions with respect to grade, superelevation, deflection and camber.
5. For seal diaphragm details, see "Miscellaneous Details No. 1" sheet.
6. For position of U1-L1 Vertical in relation to Truss Panel Point line, see "Truss Joint Details No. 2" sheet.

ALL DIMENSIONS ARE IN MILLIMETERS UNLESS OTHERWISE SHOWN

SAN FRANCISCO OAKLAND BAY BRIDGE
EAST SPAN SEISMIC SAFETY PROJECT

EAST TIE-IN

TRUSS LAYOUT NO. 1

T. Ostrom/M. Whiteside/A. Akinsanya
DESIGN OVERSIGHT

SIGN OFF DATE

DESIGN DETAIL SHEET (METRIC) REV. 3/1/98
●DATE● ●TIME● Pen Table File

	BY	CHECKED
DESIGN	D. Griffith, S. Singh	S. Cheng, H. Najm
DETAILS	A. Sidhausen, P. Zhao	M. Irwin, A. Lee
QUANTITIES	H. Nelson	A. Lee

PREPARED FOR THE STATE OF CALIFORNIA DEPARTMENT OF TRANSPORTATION

M. Sah
PROJECT ENGINEER
S. Abbas
PROJECT MANAGER

BRIDGE NO. 34-0006 (TEMP)
KILOMETER POST 12.6

CU
EA 0120R4

ORIGINAL SCALE IN MILLIMETERS FOR REDUCED PLANS 0 10 20 30 40 50 60 70 80 90 100

DISREGARD PRINTS BEARING EARLIER REVISION DATES

REVISION DATES (PRELIMINARY STAGE ONLY) 11/5/01 4/7/08

SHEET 32 OF 214

FILE =>p:\bb\04-012001\eti\dgn\aktru01.dgn

100% PS&E

USERNAME => A-00 DATE PLOTTED => 4/7/2008 TIME PLOTTED => 8:49:49 PM FILE => p:\bb\04-012001\eti\dgn\aktru01.dgn

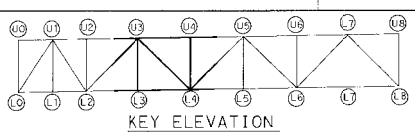

KEY ELEVATION

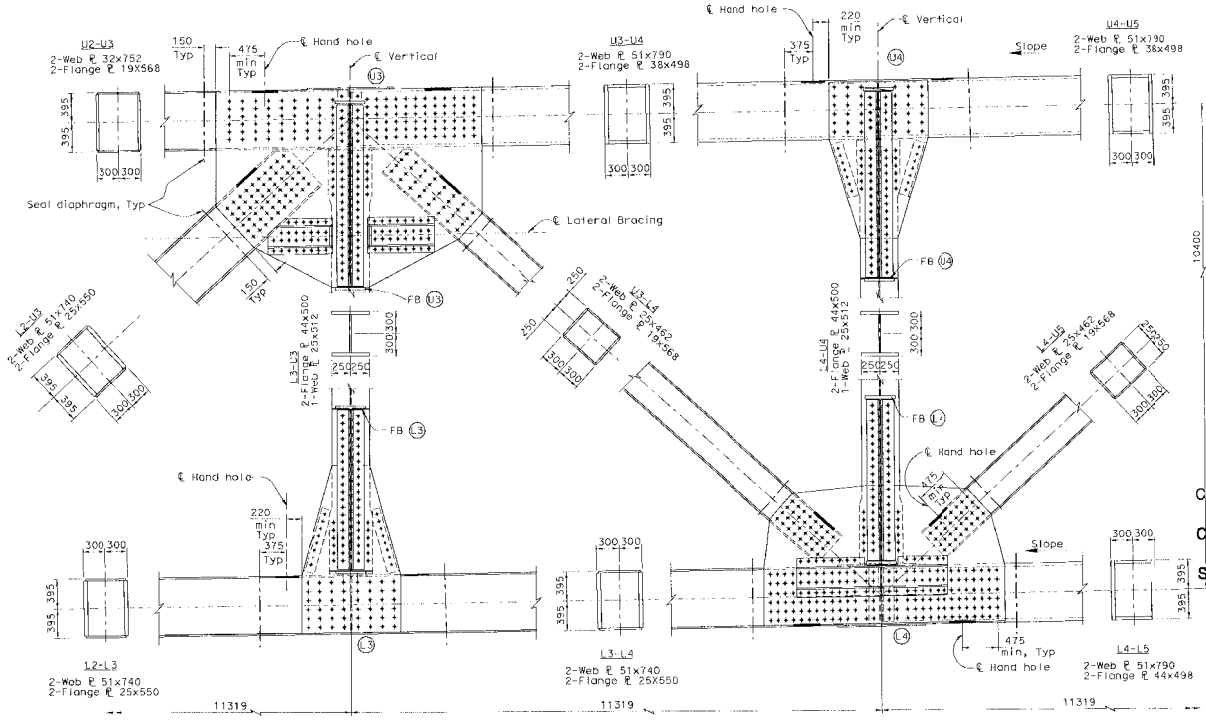

INSIDE ELEVATION NORTH TRUSS

Scale 1:25

DIST	COUNTY	ROUTE	KILOMETER POST TOTAL PROJECT	SHEET No	TOTAL
04	SF	80	12.6/13.2		

Caltrans Metric

REGISTERED CIVIL ENGINEER

4-7-08

PLANS APPROVAL DATE

REGISTERED PROFESSIONAL ENGINEER David Griffith No. C49125 Exp. 9/30/08 CIVIL STATE OF CALIFORNIA

The State of California or its officers or agents shall not be responsible for the accuracy or completeness of electronic copies of this plan sheet.

T.Y. LIN / MOFFATT & NICHOL
Two Harrison Street, Suite 500
San Francisco, CA 94105

CONTRACT NO. 04-0120R4

CONTRACT CHANGE ORDER NO 140

SHEET 29 OF 84

Notes:

1. Elevation of North Truss shown, elevation of South Truss similar.
2. For additional notes, see "Truss Layout No. 1" Sheet.
3. For seal diaphragm details, see "Miscellaneous Details No. 1" sheet.

ALL DIMENSIONS ARE IN MILLIMETERS UNLESS OTHERWISE SHOWN

SAN FRANCISCO OAKLAND BAY BRIDGE
EAST SPAN SEISMIC SAFETY PROJECT

EAST TIE-IN

TRUSS LAYOUT NO. 2

T. Ostrom/M. Whiteside/A. Akirsanya
DESIGN OVERSIGHT
SIGN OFF DATE

DESIGN BY D. Griffith, S. Singh — CHECKED S. Cheng, H. Najm
DETAILS BY A. Sidhausen, P. Zhao — CHECKED M. Irwin, A. Lee
QUANTITIES BY H. Nelson — CHECKED A. Lee

PREPARED FOR THE STATE OF CALIFORNIA DEPARTMENT OF TRANSPORTATION

M. Sah
PROJECT ENGINEER
S. Abbas
PROJECT MANAGER

BRIDGE NO. 34-0006 (TEMP)
KILOMETER POST 12.6

CU
EA 0120R4

DESIGN DETAIL SHEET (METRIC) REV. 3/1/99
#DATE# #TIME# Pen Table File

ORIGINAL SCALE IN MILLIMETERS FOR REDUCED PLANS 0 10 20 30 40 50 60 70 80 90 100

DISREGARD PRINTS BEARING EARLIER REVISION DATE

REVISION DATES (PRELIMINARY STAGE ONLY)

SHEET 33 OF 214

FILE =>p:\bb\04-0120R1\ctl\dgn\aktru02.dgn

100% PS&E

FILE =>p:\bb\04-0120R1\ctl\dgn\aktru02.dgn
TIME PLOTTED => 9:49:52 PM
DATE PLOTTED => 4/7/2008
USERNAME => A.Lee

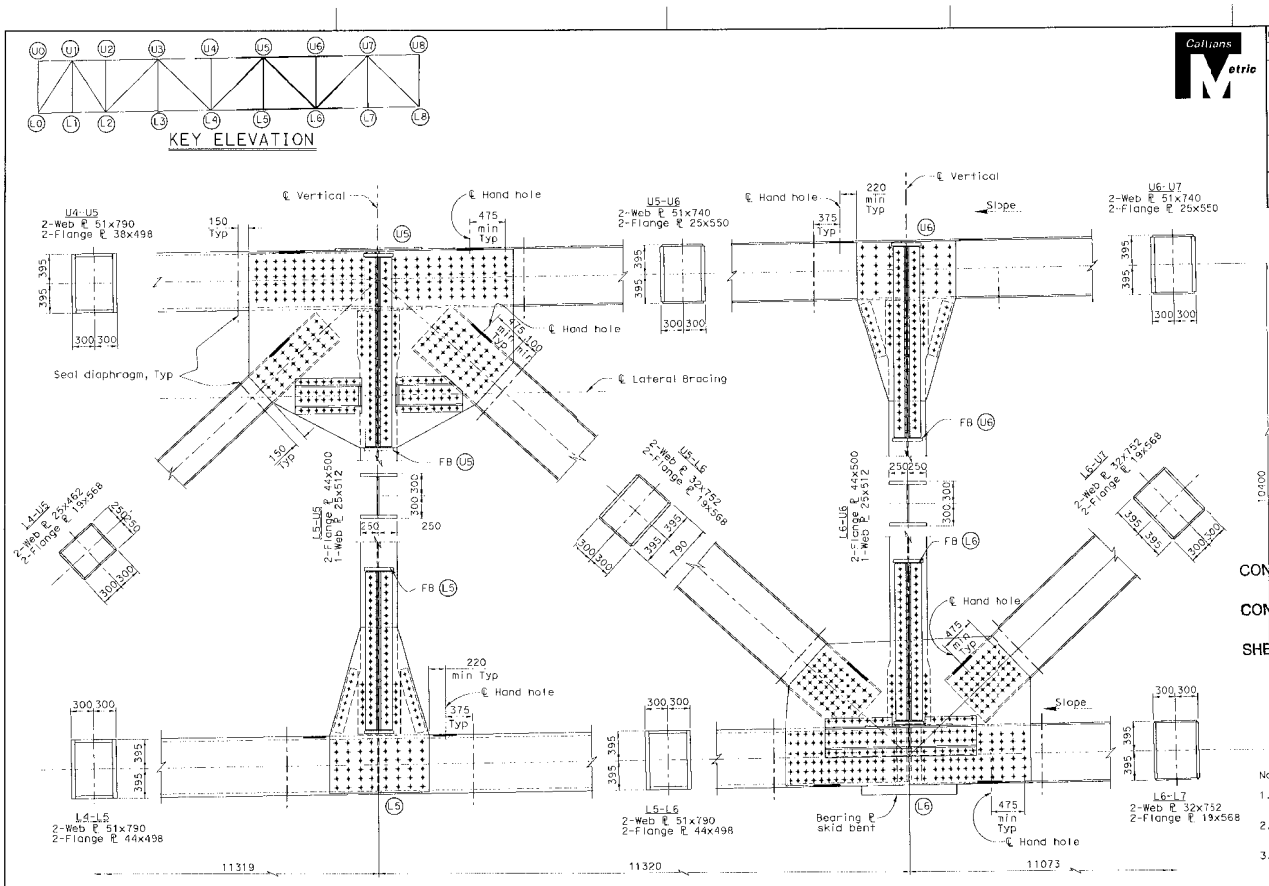

INSIDE ELEVATION NORTH TRUSS

Scale 1:25

Notes:

1. Elevation of North Truss shown, elevation of South Truss similar.
2. For additional notes, see "Truss Layout No.1" Sheet.
3. For seal diaphragm details, see "Miscellaneous Details No. 1" sheet.

DIST	COUNTY	ROUTE	KILOMETER POST TOTAL PROJECT	SHEET No	TOTAL
04	SF	80	12.6/13.2		

REGISTERED CIVIL ENGINEER

4-7-08

PLANS APPROVAL DATE

The State of California or its officers or agents shall not be responsible for the accuracy or completeness of electronic copies of this plan sheet.

REGISTERED PROFESSIONAL ENGINEER David Griffith No. C49125 Exp. 9/30/08 CIVIL STATE OF CALIFORNIA

T.Y. LIN / MOFFATT & NICHOL
Two Harrison Street, Suite 500
San Francisco, CA 94105

CONTRACT NO. 64-0120R4

CONTRACT CHANGE ORDER NO 140

SHEET 30 OF 84

100% PS&E

ALL DIMENSIONS ARE IN MILLIMETERS UNLESS OTHERWISE SHOWN

SAN FRANCISCO OAKLAND BAY BRIDGE
EAST SPAN SEISMIC SAFETY PROJECT

EAST TIE-IN

TRUSS LAYOUT NO. 3

T. Ostrom/M. Whiteside/A. Akinsanya
DESIGN OVERSIGHT

SIGN OFF DATE

DESIGN DETAIL SHEET (METRIC) REV. 3/1/98
$DATE$ $TIME$ Pen Table File

DESIGN	BY D. Griffith, S. Singh	CHECKED S. Cheng, H. Nojm	
DETAILS	BY A. Sulhausen, P. Zhao	CHECKED M. Irwin, A. Lee	
QUANTITIES	BY H. Nelson	CHECKED A. Lee	

PREPARED FOR THE STATE OF CALIFORNIA DEPARTMENT OF TRANSPORTATION

ORIGINAL SCALE IN MILLIMETERS FOR REDUCED PLANS 0 10 20 30 40 50 60 70 80 90 100

M. Soh
PROJECT ENGINEER
S. Abbas
PROJECT MANAGER

BRIDGE NO. 34-0006 (TEMP)
KILOMETER POST 12.6

CU
EA 0120R4

DISREGARD PRINTS BEARING EARLIER REVISION DATES

REVISION DATES (FACILITY/STATE FILE)

SHEET 34 OF 214

FILE => p:\bb\04-012001\etf\dgn\aktru03.dgn

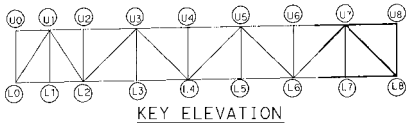

KEY ELEVATION

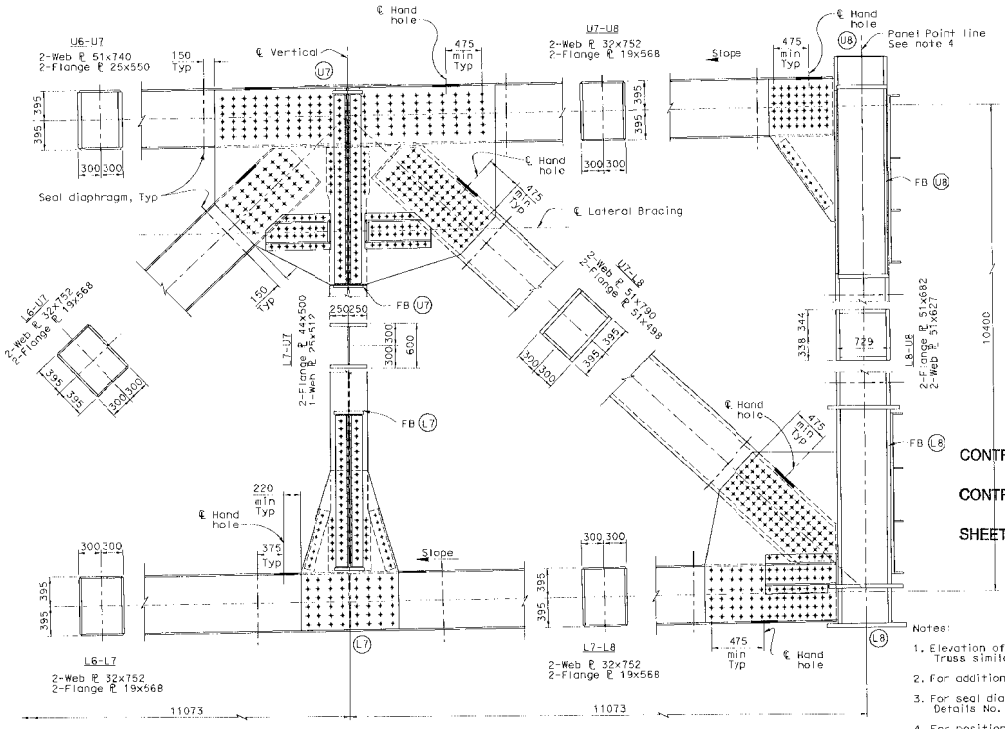

INSIDE ELEVATION NORTH TRUSS

Scale 1:25

Notes:

1. Elevation of North Truss shown, elevation of South Truss similar.
2. For additional notes, see "Truss Layout No.1" Sheet.
3. For seal diaphragm details, see "Miscellaneous Details No. 1" sheet.
4. For position of U8-L8 Vertical in relation to Truss Panel Point line, see "Truss Joint Details No. 10" sheet.

DIST	COUNTY	ROUTE	KILOMETER POST TOTAL PROJECT	SHEET No	TOTAL
04	SF	80	12.6/13.2		

REGISTERED CIVIL ENGINEER

4-7-08

PLANS APPROVAL DATE

The State of California or its officers or agents shall not be responsible for the accuracy or completeness of electronic copies of this plan sheet.

REGISTERED PROFESSIONAL ENGINEER David Griffith No. C49125 Exp. 9/30/08 CIVIL STATE OF CALIFORNIA

T.Y. LIN / MOFFATT & NICHOL
Two Harrison Street, Suite 500
San Francisco, CA 94105

CONTRACT NO. 04-0120R4

CONTRACT CHANGE ORDER NO 140

SHEET 31 OF 84

100% PS&E

ALL DIMENSIONS ARE IN MILLIMETERS UNLESS OTHERWISE SHOWN

SAN FRANCISCO OAKLAND BAY BRIDGE
EAST SPAN SEISMIC SAFETY PROJECT

EAST TIE-IN

TRUSS LAYOUT NO. 4

T. Ostrom/M. Whiteside/A. Akinsanya
DESIGN OVERSIGHT

SIGN OFF DATE

DESIGN DETAIL SHEET (METRIC) REV. 3/1/98
#DATE# #TIME# Pen Table File

DESIGN	BY D. Griffith, S. Singh	CHECKED S. Cheng, H. Najm	
DETAILS	BY A. Sidhausen, P. Zhao	CHECKED M. Irwin, A. Lee	
QUANTITIES	BY H. Nelson	CHECKED A. Lee	

PREPARED FOR THE STATE OF CALIFORNIA DEPARTMENT OF TRANSPORTATION

M. Sah
PROJECT ENGINEER
S. Abbas
PROJECT MANAGER

BRIDGE NO. 34-0006 (TEMP)
KILOMETER POST 12.6

CU
EA 0120R1

ORIGINAL SCALE IN MILLIMETERS FOR REDUCED PLANS 0 10 20 30 40 50 60 70 80 90 100

GIGREGARD PRINTS BEARING EARLIER REVISION DATES

REVISION DATES (PRELIMINARY STAGE ONLY) 11/8/07 4/7/08

SHEET 35 OF 214

FILE =>p:\bb\04-012001\eti\dgn\aktru04.dgn

USERNAME => ALee DATE PLOTTED => 4/7/2008 TIME PLOTTED => 9:49:57 PM FILE => p:\bb\04-012001\eti\dgn\aktru04.dgn

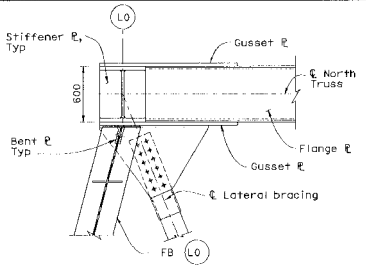

PLAN

1:20

Strongback bracket and diagonal not shown for clarity. North Truss shown, South Truss similar. For information not shown, see Typical Floor Beam Connection Detail.

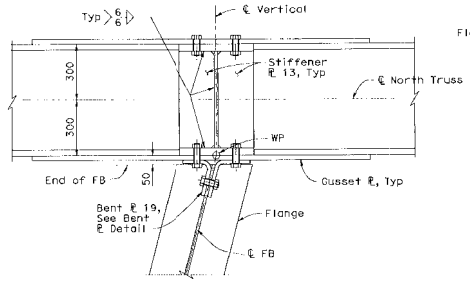

TYPICAL FLOOR BEAM CONNECTION DETAIL

1:10

North Truss shown, South Truss similar.

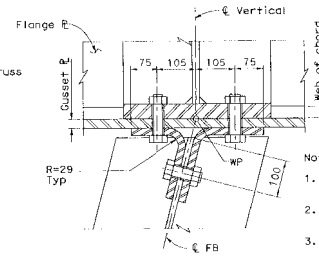

BENT ℄ DETAIL

1:5

Notes:

1. For lateral bracing details, see "Lateral Bracing Details" sheet.
2. The number of bolts shall be the same as the number of bolt holes shown.
3. All bolts shall be 29 Dia A490, unless noted otherwise. For hole size, minimum spacing, edge distance and end distance, See "General Notes No.2" sheet.
4. Truss chord splices are located at pane points (L1), (L2), (L4), (L6) (U1), (U3), (U5) and (U7).
5. For Floor Beam dimensions, see "Typical Section" sheet.
6. For seal diaphragm details, see "Miscellaneous Details No.1" sheet.
7. For strongback bracket details, see "Miscellaneous Details No.2" sheet.
8. For hand hole and man hole details, see "Man Hole and Hand Hole Details" sheet.

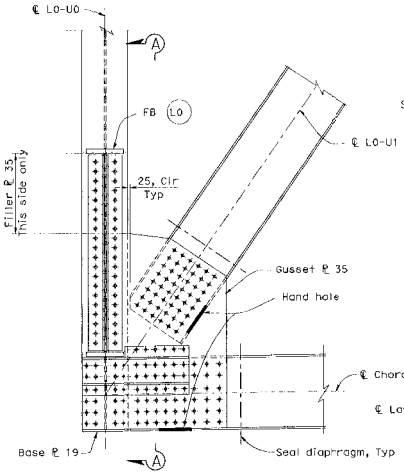

NORTH TRUSS ELEVATION (L0)

1:20

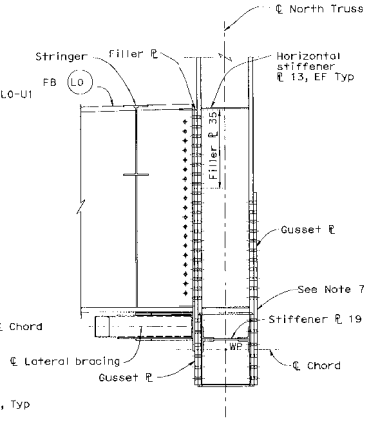

SECTION A-A

1:20

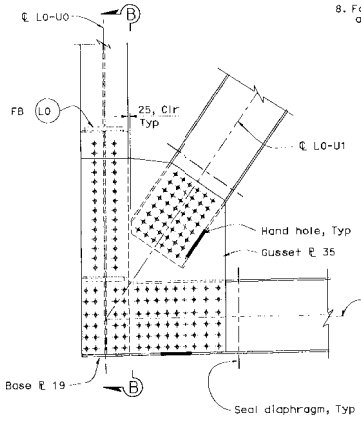

SOUTH TRUSS ELEVATION (L0)

1:20

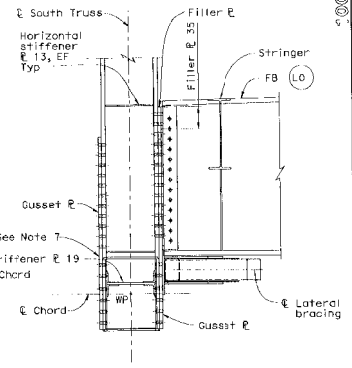

SECTION B-B

1:20

CONTRACT NO. 04-0120R4

CONTRACT CHANGE ORDER NO 140

SHEET 32 OF 84

ALL DIMENSIONS ARE IN MILLIMETERS UNLESS OTHERWISE SHOWN

DIST	COUNTY	ROUTE	KILOMETER POST TOTAL PROJECT	SHEET No.	TOTAL
04	SF	80	12.6/13.2		

REGISTERED CIVIL ENGINEER

4-7-08

PLANS APPROVAL DATE

The State of California or its officers or agents shall not be responsible for the accuracy or completeness of electronic copies of this plan sheet.

REGISTERED PROFESSIONAL ENGINEER — David Griffith — No. C49125 — Exp. 3/30/08 — CIVIL — STATE OF CALIFORNIA

T.Y. LIN / MOFFATT & NICHOL
Two Harrison Street, Suite 500
San Francisco, CA 94105

T. Ostrom/M. Whiteside/A. Akinsanya — DESIGN OVERSIGHT

SIGN OFF DATE

DESIGN DETAIL SHEET (METRIC) REV. 3/1/99 — #DATE# #ITEM# Main Table File

	BY	CHECKED
DESIGN	D. Griffith, S. Singh	S. Cheng, H. Najm
DETAILS	A. Sidhausen, P. Zhao	M. Irwin, A. Lee
QUANTITIES	H. Nelson	A. Lee

PREPARED FOR THE STATE OF CALIFORNIA DEPARTMENT OF TRANSPORTATION

N. Sah — PROJECT ENGINEER
S. Abbas — PROJECT MANAGER

BRIDGE NO. 34-0006 (TISMEP)
KILOMETER POST 12.6

CU EA 012081

FILE =>p:\56\04-012081\etl\dgn\akt1d01.dgn

ORIGINAL SCALE IN MILLIMETERS FOR REDUCED PLANS 0 10 20 30 40 50 60 70 80 90 100

SAN FRANCISCO OAKLAND BAY BRIDGE
EAST SPAN SEISMIC SAFETY PROJECT

EAST TIE-IN

TRUSS JOINT DETAILS NO. 1

DISREGARD PRINTS BEARING EARLIER REVISION DATES

REVISION DATES (PRELIMINARY STAGE ONLY)

SHEET 36 OF 214

DATE PLOTTED => 4/7/2008

LAST REVISION 4/7/08

USERNAME => AKE

TIME PLOTTED => 8:49:39 AM

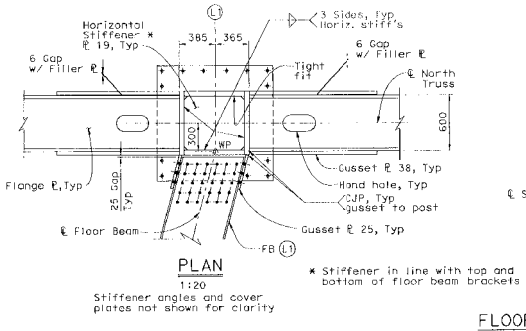

PLAN

1:20

Stiffener angles and cover plates not shown for clarity

* Stiffener in line with top and bottom of floor beam brackets

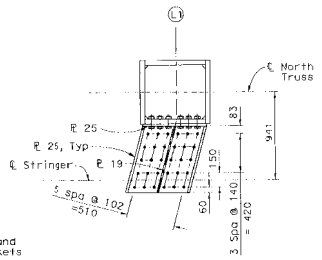

FLOOR BEAM UPPER BRACKET PLAN

1:20

FB not shown for clarity

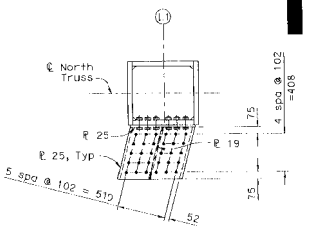

FLOOR BEAM LOWER BRACKET PLAN

1:20

FB not shown for clarity

Notes:

1. For truss notes and connection information not shown, see "Truss Joint Details No. 1" sheet.
2. Provide 75 dia hole in botton cover plate of chord to accomadate bolts for bearing plate.

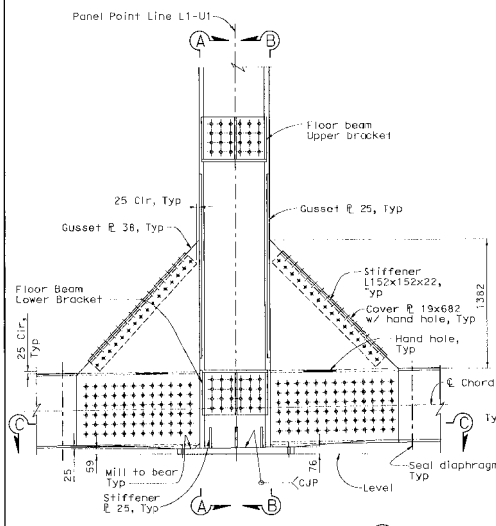

NORTH TRUSS ELEVATION (L1)

1:20

Stringers and FB not shown for clarity

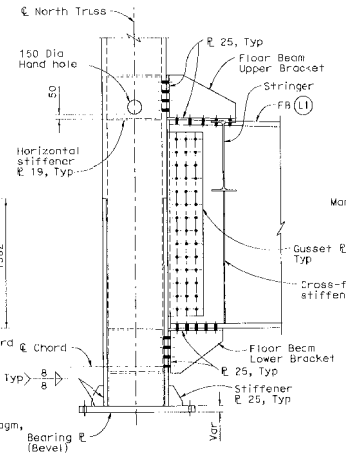

SECTION A-A

1:20

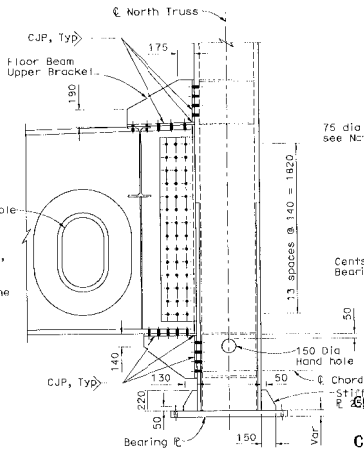

SECTION B-B

1:20

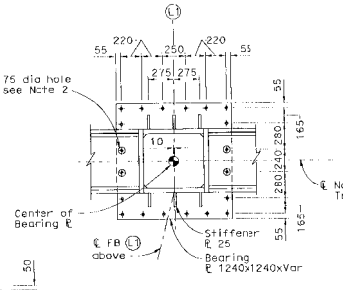

SECTION C-C

1:20

CONTRACT NO. 04-0120R4

CONTRACT CHANGE ORDER NO. 140

SHEET 33 OF 84

ALL DIMENSIONS ARE IN MILLIMETERS UNLESS OTHERWISE SHOWN

SAN FRANCISCO OAKLAND BAY BRIDGE
EAST SPAN SEISMIC SAFETY PROJECT

EAST TIE-IN

TRUSS JOINT DETAILS NO. 2

DIST	COUNTY	ROUTE	KILOMETER POST TOTAL PROJECT	SHEET NO	TOTAL
04	SF	80	12.6/13.2		

REGISTERED CIVIL ENGINEER — 4-7-08 — PLANS APPROVAL DATE

David Griffith, No. C49125, Exp. 9/30/08, CIVIL, STATE OF CALIFORNIA

The State of California or its officers or agents shall not be responsible for the accuracy of completeness of electronic copies of this plan sheet.

T.Y. LIN / MOFFATT & NICHOL
Two Harrison Street, Suite 300
San Francisco, CA 94105

T. Ostrom/M. Whiteside/A. Akirsanya	DESIGN	BY D. Griffith, S. Singh	CHECKED S. Cheng, H. Najm
DESIGN OVERSIGHT	DETAILS	BY E. Pieschuk, D. Singh	CHECKED M. Irwin, A. Lee
SIGN OFF DATE	QUANTITIES	BY H. Nelson	CHECKED A. Lee

PREPARED FOR THE STATE OF CALIFORNIA DEPARTMENT OF TRANSPORTATION

W. Soh — PROJECT ENGINEER
S. Abbas — PROJECT MANAGER

BRIDGE NO. 34-0006 (T.I.M.E.)
KILOMETER POST 12.6

CU
EA 01208R

DISREGARD PRINTS BEARING EARLIER REVISION DATES

REVISION DATES (PRELIMINARY STAGE ONLY)

SHEET 37 OF 214

DESIGN DETAIL SHEET (METRIC) REV. 3/1/99
MSTRS MTIME Pen Table File

ORIGINAL SCALE IN MILLIMETERS FOR REDUCED PLANS 0 10 20 30 40 50 60 70 80 90 100

FILE => p:\bb\04-0120R4\eff\dgn\vakf|d02.dgn

DATE PLOTTED => 7/7/2008 10:48:16 AM

USERNAME => V.K.de

DIST	COUNTY	ROUTE	KILOMETER POST TOTAL PROJECT	SHEET NO	TOTAL
04	SF	80	12.6/13.2		

REGISTERED CIVIL ENGINEER

4-7-08
PLANS APPROVAL DATE

The State of California or its officers or agents shall not be responsible for the accuracy or completeness of electronic copies of this plan sheet.

T.Y.LIN / MOFFATT & NICHOL
Two Harrison Street, Suite 300
San Francisco, CA 94105

CONTRACT NO. 04-0120R4

CONTRACT CHANGE ORDER NO. 140

SHEET 34 OF 84

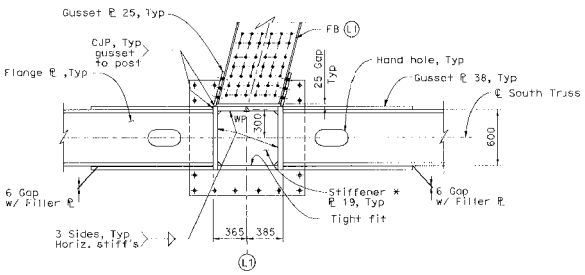

PLAN
1:20

Stiffener angles and cover plates not shown for clarity
* stiffeners in line with top and bottom of floor beam brackets and bottom flange of chord.

Notes:

1. For truss notes and connection information not shown, see "Truss Joint Details No. 1" sheet.
2. For Floor Beam Upper and Lower Bracket details, see "Truss Joint Details No. 14" sheet.
3. Provide 75 dia hole in bottom cover plate of chord to accomodate bolts for bearing plates.

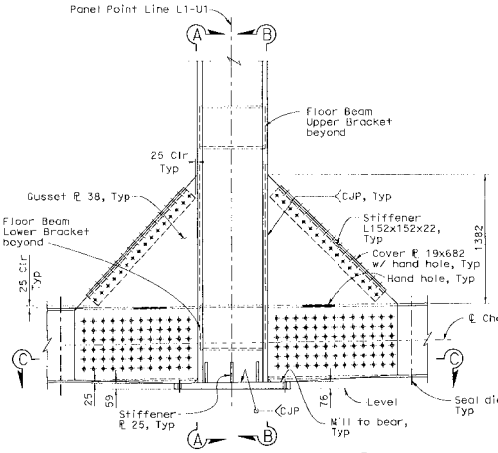

SOUTH TRUSS ELEVATION (L1)
1:20

Stringers and FB not shown for clarity

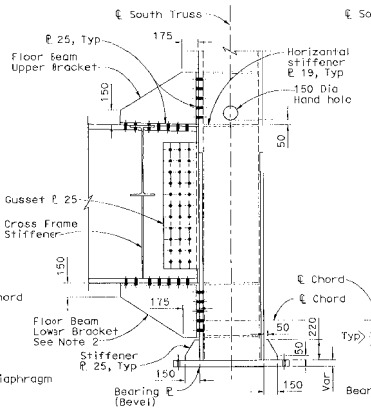

SECTION A-A
1:20

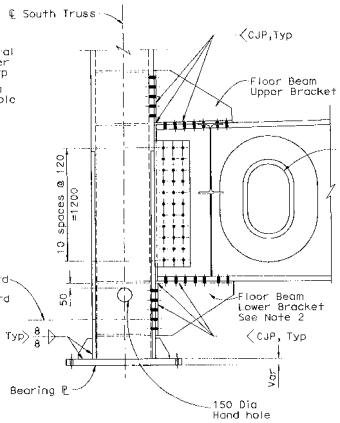

SECTION B-B
1:20

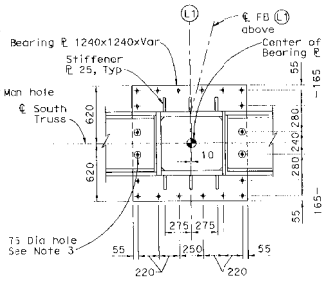

SECTION C-C
1:20

ALL DIMENSIONS ARE IN MILLIMETERS UNLESS OTHERWISE SHOWN

SAN FRANCISCO OAKLAND BAY BRIDGE
EAST SPAN SEISMIC SAFETY PROJECT

EAST TIE-IN

TRUSS JOINT DETAILS NO. 3

T. Ostrom/M. Whiteside/A. Akinsanya	DESIGN	D. Griffith, S. Singh	S. Cheng, M. Najm
DESIGN OVERSIGHT	DETAILS	E. Plishchuk, D. Singh	M. Irwin, A. Lee
SIGN OFF DATE	QUANTITIES	H. Nelson	A. Lee

PREPARED FOR THE STATE OF CALIFORNIA
DEPARTMENT OF TRANSPORTATION

M. Soh — PROJECT ENGINEER
S. Abbas — PROJECT MANAGER

BRIDGE NO. 34-0006 (TEMP.)
KILOMETER POST 12.6

CU
EA 0120R4

DESIGN DETAIL SHEET (METRIC REV. 3/19/08)
RDATE# RTIME# Pen Table File

ORIGINAL SCALE IN MILLIMETERS FOR REDUCED PLANS 0 10 20 30 40 50 60 70 80 90 100

DISREGARD PRINTS BEARING EARLIER REVISION DATES

REVISION DATES (ENGINEERING STAFF ONLY)

SHEET 38 OF 214

FILE => C:\Projects\04-012001\c1f\dgn\dkt_jd03.dgn

USERNAME => JLee

DATE PLOTTED => 4/7/2008

TIME PLOTTED => 10:48:48 PM

FILE => P:\Projects\04-012001\c1f\dgn\dkt_jd03.dgn

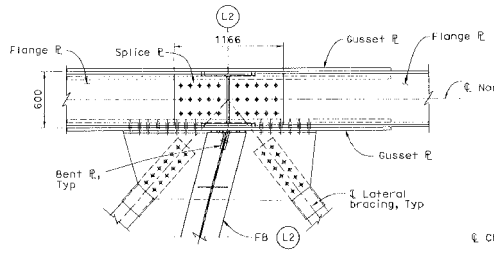

PLAN

1:20

Strongback bracket and diagonals not shown for clarity.
North Truss shown, South Truss similar.

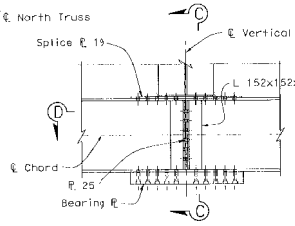

DETAIL 1

1:20

(View is along ℄ Truss. Bolts not shown for clarity.)

Notes:

1. For lateral bracing details, see "Lateral Bracing Details" sheets.
2. For additional truss notes and connection information not shown, see "Truss Joint Details No. 1" sheet.
3. For floor beam dimensions, see "Typical Section" sheet.
4. For seal diaphragm details see "Miscellaneous Details No.1" sheet.
5. For strongback bracket details, see "Miscellaneous Details No.2" sheet.
6. Min dimension of bearing plate is 800x800x95. Dimensions to be adjusted based on Contractor's jacking system.

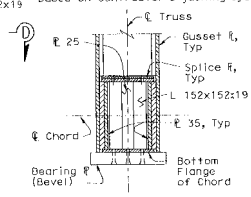

SECTION C-C

1:20

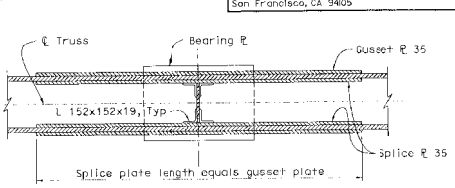

SECTION D-D

1:20

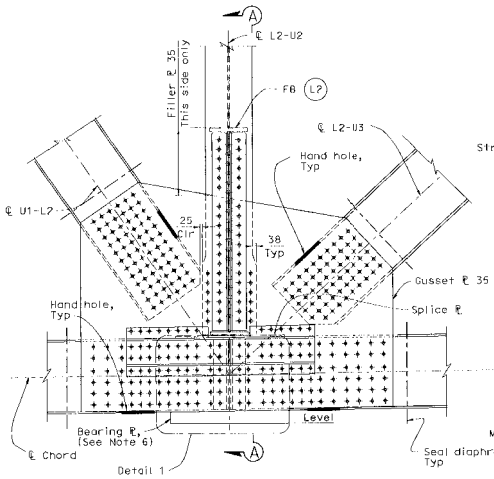

NORTH TRUSS ELEVATION L2

1:20

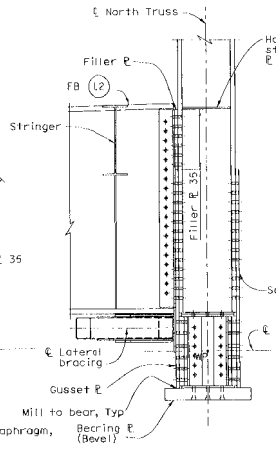

SECTION A-A

1:20

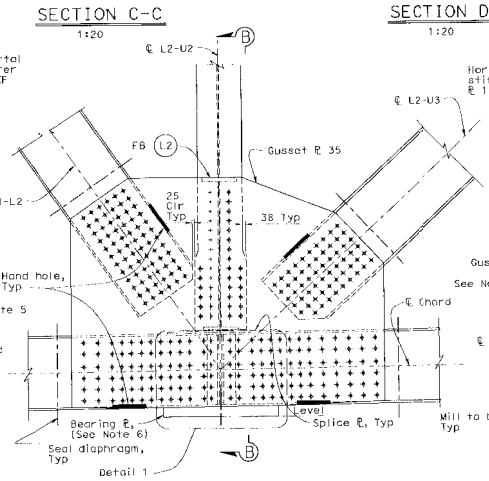

SOUTH TRUSS ELEVATION L2

1:20

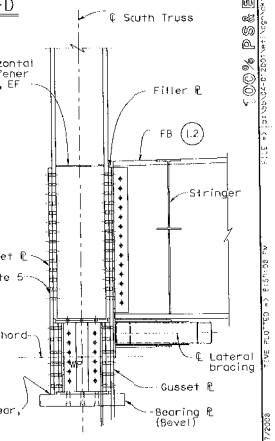

SECTION B-B

1:20

DIST	COUNTY	ROUTE	KILOMETER POST TOTAL PROJECT	SHEET NO.	TOTAL
04	SF	80	12.6/13.2		

REGISTERED CIVIL ENGINEER

4-7-08

PLANS APPROVAL DATE

The State of California or its officers or agents shall not be responsible for the accuracy or completeness of electronic copies of this plan sheet.

David Griffith, No. C49125, Exp. 9/30/08, CIVIL, STATE OF CALIFORNIA

T.Y. LIN / MOFFATT & NICHOL
Two Harrison Street, Suite 300
San Francisco, CA 94105

ALL DIMENSIONS ARE IN MILLIMETERS UNLESS OTHERWISE SHOWN

CONTRACT NO. 04-0120R4

CONTRACT CHANGE ORDER NO 140

SHEET 35 OF 84

	BY	CHECKED
DESIGN	D. Griffith, S. Singh	S. Chang, H. Najm
DETAILS	A. Suhausen, P. Zhao	M. Irwin, A. Lee
QUANTITIES	H. Nelson	A. Lee

PREPARED FOR THE STATE OF CALIFORNIA DEPARTMENT OF TRANSPORTATION

M. Sah, PROJECT ENGINEER
S. Abbas, PROJECT MANAGER

BRIDGE NO. 34-0006 (TEMP.)
KILOMETER POST 12.6

CU 0120R4
EA 0120R4

SAN FRANCISCO OAKLAND BAY BRIDGE
EAST SPAN SEISMIC SAFETY PROJECT

EAST TIE-IN

TRUSS JOINT DETAILS NO. 4

SHEET 39 OF 214

T. Ostrom/M. Whiteside/A. Akinsanya
DESIGN OVERSIGHT

SIGN OFF DATE

DESIGN DETAIL SHEET (METRIC) (REV. 3/1/99)
SCALE=# MTNE=# Pen Table File

ORIGINAL SCALE IN MILLIMETERS FOR REDUCED PLANS 0 10 20 30 40 50 60 70 80 90 100

DISREGARD PRINTS BEARING EARLIER REVISION DATES →

REVISION DATES (PRELIMINARY STAGE ONLY)

FILE =j:\pt\bb\04-0120r4\eff\dgn\aktjd04.dgn

DATE PLOTTED => 4/7/2008 11:51:58 AM
USERNAME => Alex

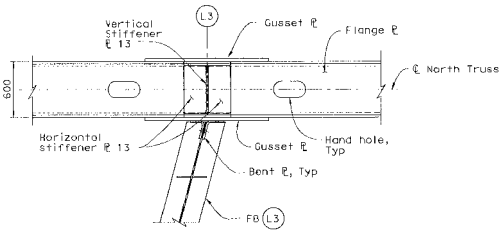

PLAN
1:20
Strongback bracket not shown for clarity.
North Truss shown, South Truss similar.

Notes:

1. For truss notes and connection information not shown, see "Truss Joint Details No. 1" sheet.
2. For Floor Beam dimensions, see "Typical Section" sheet.
3. For seal diaphragm details, see "Miscellaneous Details No.1" sheet.
4. For strongback bracket details, see "Miscellaneous Details No.2" sheet.

Caltrans Metric

DIST	COUNTY	ROUTE	KILOMETER POST TOTAL PROJECT	SHEET No	TOTAL
04	SF	80	12.6/13.2		

REGISTERED CIVIL ENGINEER
4-7-08
PLANS APPROVAL DATE
The State of California or its officers or agents shall not be responsible for the accuracy or completeness of electronic copies of this plan sheet.

REGISTERED PROFESSIONAL ENGINEER David Griffith No. C49125 Exp. 9/30/08 CIVIL STATE OF CALIFORNIA

T.Y. LIN / MOFFATT & NICHOL
Two Harrison Street, Suite 500
San Francisco, CA 94105

CONTRACT NO. 04-0120R4

CONTRACT CHANGE ORDER NO 140

SHEET 36 OF 84

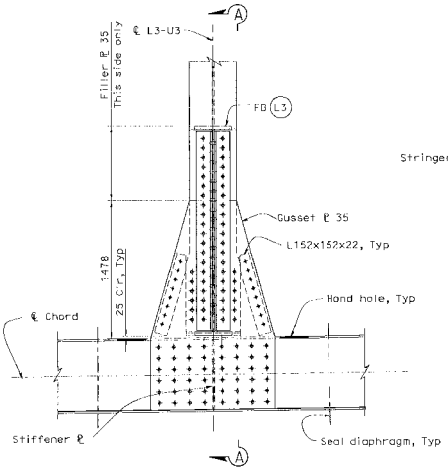

NORTH TRUSS ELEVATION L3
1:20

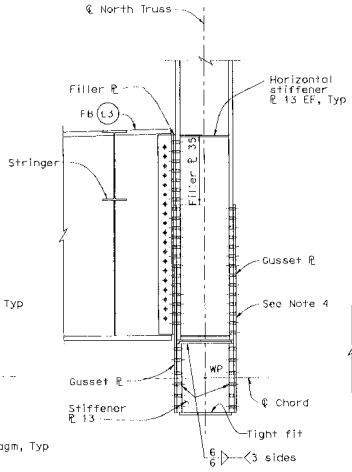

SECTION A-A
1:20

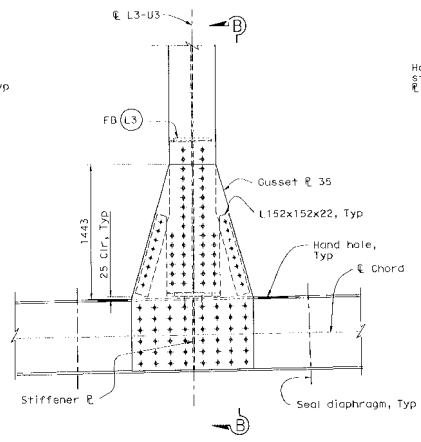

SOUTH TRUSS ELEVATION L3
1:20

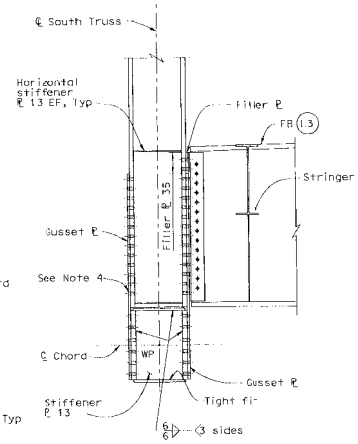

SECTION B-B
1:20

ALL DIMENSIONS ARE IN MILLIMETERS UNLESS OTHERWISE SHOWN

SAN FRANCISCO OAKLAND BAY BRIDGE
EAST SPAN SEISMIC SAFETY PROJECT

EAST TIE-IN

TRUSS JOINT DETAILS NO. 5

T. Ostrom/M. Whiteside/A. Akinsanya
DESIGN OVERSIGHT
SIGN OFF DATE

DESIGN	BY D. Griffith, S. Singh	CHECKED S. Cheng, H. Najm	
DETAILS	BY A. Sudhausen, P. Zhao	CHECKED M. Irwin, A. Lee	
QUANTITIES	BY H. Nelson	CHECKED A. Lee	

PREPARED FOR THE STATE OF CALIFORNIA DEPARTMENT OF TRANSPORTATION

M. Sah
PROJECT ENGINEER
S. Abbas
PROJECT MANAGER

BRIDGE NO. 34-0006 (TEMP)
KILOMETER POST 12.6

DESIGN DETAIL SHEET (METRIC) (REV. 5/1/99)
DATE= TIME= Pen Table File

ORIGINAL SCALE IN MILLIMETERS FOR REDUCED PLANS 0 10 20 30 40 50 60 70 80 90 100

CU
EA 0120R4

DISREGARD PRINTS BEARING EARLIER REVISION DATES

REVISION DATES (PRELIMINARY STAGE ONLY)

SHEET 40 OF 214

FILE =>p:\bb\04-012001\eti\dgn\aktjd06.dgn

100% PS&E

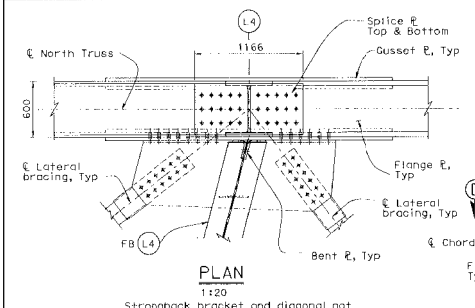

PLAN
1:20

Strongback bracket and diagonal not shown for clarity.
North truss shown, South truss similar.

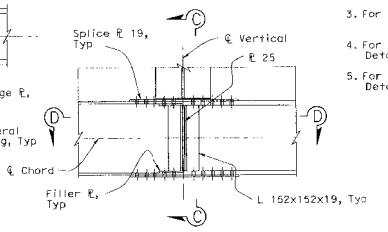

DETAIL 2
1:20

(View is along ℄ Truss. Bolts not shown for clarity.)

Notes:

1. For lateral bracing details, see "Lateral Bracing Details" sheets.
2. For additional truss notes and connection information not shown, see "Truss Joint Details No. 1" sheet.
3. For Floor Beam dimensions, see "Typical Section" sheet.
4. For seal diaphragm details, see "Miscellaneous Details No. 1" sheet.
5. For strongback bracket details, see "Miscellaneous Details No.2" sheet.

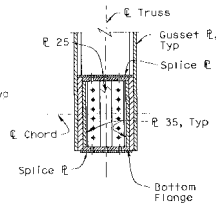

SECTION C-C
1:20

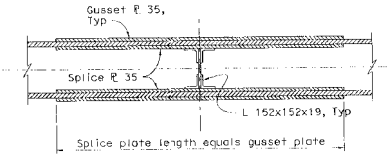

SECTION D-D
1:20

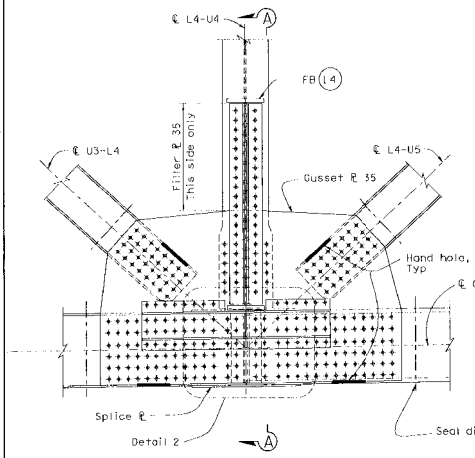

NORTH TRUSS ELEVATION (L4)
1:20

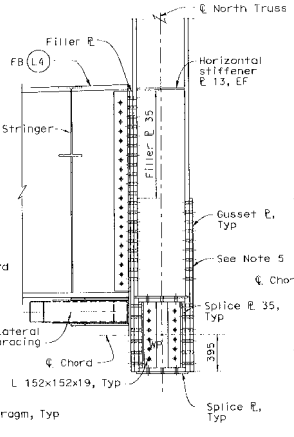

SECTION A-A
1:20

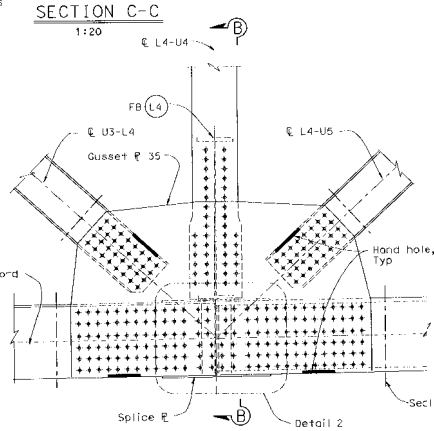

SOUTH TRUSS ELEVATION (L4)
1:20

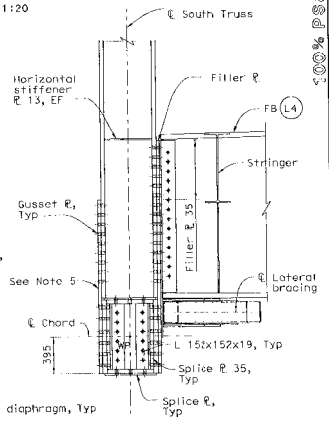

SECTION B-B
1:20

ALL DIMENSIONS ARE IN MILLIMETERS UNLESS OTHERWISE SHOWN

CONTRACT NO. 04-0120R4

SAN FRANCISCO OAKLAND BAY BRIDGE
EAST SPAN SEISMIC SAFETY PROJECT

EAST TIE-IN

TRUSS JOINT DETAIL NO. 6

DIST	COUNTY	ROUTE	KILOMETER POST TOTAL PROJECT	SHEET NO	TOTAL
04	SF	80	12.6/13.2		

REGISTERED CIVIL ENGINEER — 4-7-08 — PLANS APPROVAL DATE

David Griffith, No. C49825, Exp. 9/30/08, CIVIL, STATE OF CALIFORNIA

The State of California or its officers or agents shall not be responsible for the accuracy or completeness of electronic copies of this plan sheet.

T.Y. LIN / MOFFATT & NICHOL
Two Harrison Street, Suite 500
San Francisco, CA 94105

T. Ostrom/M. Whiteside/A. Akins — DESIGN OVERSIGHT — SIGN OFF DATE

CONTRACT CHANGE ORDER NO. 140

DESIGN BY D. Griffith, S. Singh — CHECKED S. Cheng, H. Najm
DETAILS BY A. Sidhausen, P. Zhao — CHECKED M. Irwin, A. Lee
QUANTITIES BY H. Nelson — CHECKED A. Lee

PREPARED FOR THE STATE OF CALIFORNIA
DEPARTMENT OF TRANSPORTATION

M. Soh — PROJECT ENGINEER
S. Abbas — PROJECT MANAGER

BRIDGE NO. 34-0006 (TEMP.)
KILOMETER POST 12.6

CU
EA 0120R4

SHEET 37 OF 84

DESIGN DETAIL SHEET (METRIC) REV. 3/1/99 — DGN/DATE# — Pen Table File

ORIGINAL SCALE IN MILLIMETERS FOR REDUCED PLANS

DISREGARD PRINTS BEARING EARLIER REVISION DATES

REVISION DATES (PRELIMINARY STAGE ONLY)						SHEET	OF
BY						41	214

FILE => p:\bb\04-012001\et1\dgn\okt1d06.dgn

DATE PLOTTED => 7/7/2008 8:50:13 PM

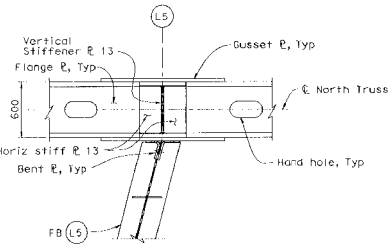

PLAN
1:20

Strongback bracket not shown for clarity.
North Truss shown, South Truss similar.

Notes:

1. For truss notes and connection information not shown, see "Truss Joint Details No. 1" sheet.
2. For Floor Beam dimensions, see "Typical Section" sheet.
3. For seal diaphragm details, see Miscellaneous Details No.1" sheet.
4. For strongback bracket details, see Miscellaneous Details No. 2" sheet.

Caltrans Metric

DIST	COUNTY	ROUTE	KILOMETER POST TOTAL PROJECT	SHEET NO.	TOTAL
04	SF	80	12.6/13.2		

REGISTERED CIVIL ENGINEER

4-7-08
PLANS APPROVAL DATE

The State of California or its officers or agents shall not be responsible for the accuracy or completeness of electronic copies of this plan sheet.

REGISTERED PROFESSIONAL ENGINEER — David Griffith — No. C49125 — Exp. 9/30/08 — CIVIL — STATE OF CALIFORNIA

T.Y. LIN / MOFFATT & NICHOL
Two Harrison Street, Suite 300
San Francisco, CA 94105

CONTRACT NO. 04-0120R4

CONTRACT CHANGE ORDER NO 140

SHEET 38 OF 84

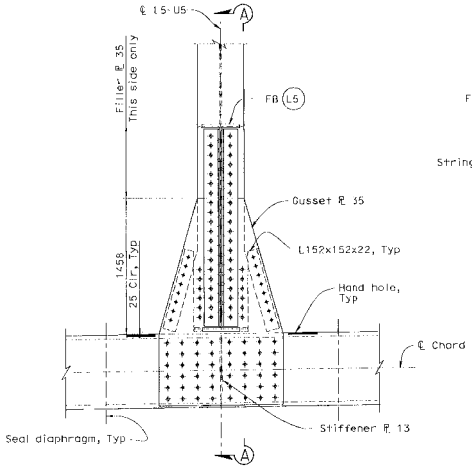

NORTH TRUSS ELEVATION L5
1:20

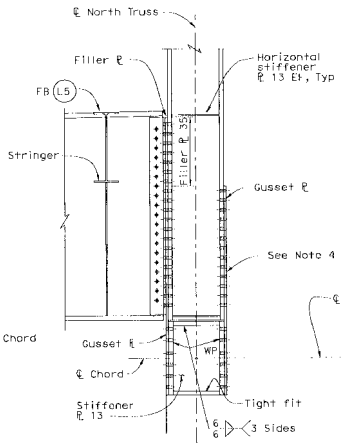

SECTION A-A
1:20

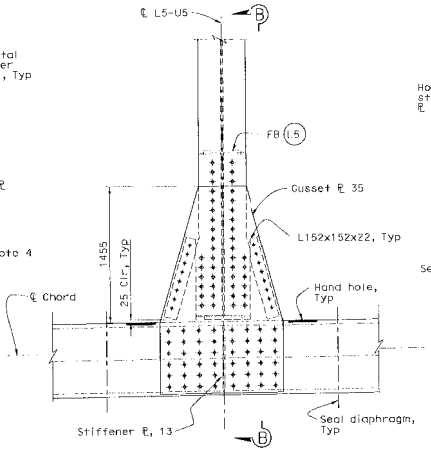

SOUTH TRUSS ELEVATION L5
1:20

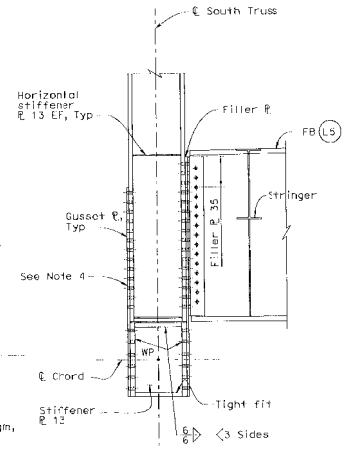

SECTION B-B
1:20

ALL DIMENSIONS ARE IN MILLIMETERS UNLESS OTHERWISE SHOWN

SAN FRANCISCO OAKLAND BAY BRIDGE
EAST SPAN SEISMIC SAFETY PROJECT

EAST TIE-IN

TRUSS JOINT DETAILS NO. 7

T. Ostrom/M. Whiteside/A. Akinsanya	DESIGN	BY D. Griffith, S. Singh	CHECKED S. Chang, H. Najm	W. Soh
DESIGN OVERSIGHT	DETAILS	BY A. Sudhausen, P. Zhao	CHECKED M. Irwin, A. Lee	PROJECT ENGINEER S. Abbas
SIGN OFF DATE	QUANTITIES	BY H. Nelson	CHECKED A. Lee	PROJECT MANAGER

PREPARED FOR THE STATE OF CALIFORNIA DEPARTMENT OF TRANSPORTATION

BRIDGE NO. 34-0006 (TEMP.)
KILOMETER POST 12.6

CU
EA 0120R1

DESIGN DETAIL SHEET (METRIC) REV. 3/1/98
#DATE# #TIME# Pen Table File

ORIGINAL SCALE IN MILLIMETERS FOR REVISED PLANS 0 10 20 30 40 50 60 70 80 90 100

FILE =>p:\bb\04-0120r1\wrk\dgn\a4tjd07.dgn

DISREGARD PRINTS BEARING EARLIER REVISION DATES →

REVISION DATES (PRE-SUBMIT STAGE ONLY)

SHEET 42 OF 214

LEGEND: =>$LEGEND

FILE =>p:\bb\04-0120r1\wrk\dgn\a4tjd07.dgn 4-7-2008 8:30:16 AM

DATE PLOTTED => 4/7/2008

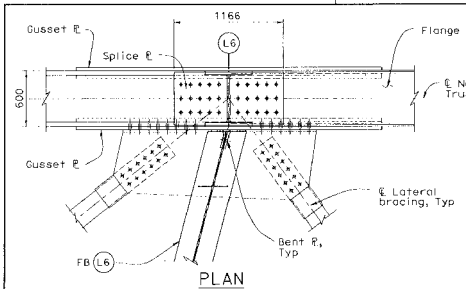

PLAN

1:20

Strongback bracket and diagonals not shown for clarity.
North Truss shown, South Truss similar.

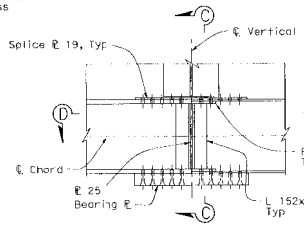

DETAIL 3

1:20

(View is along ℄ Truss. Bolts not shown for clarity.)

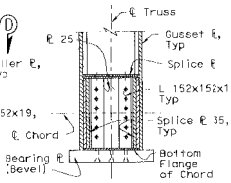

SECTION C-C

1:20

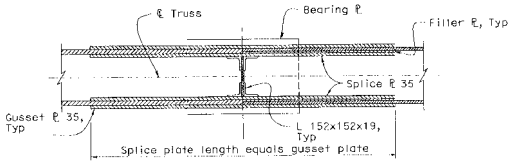

SECTION D-D

1:20

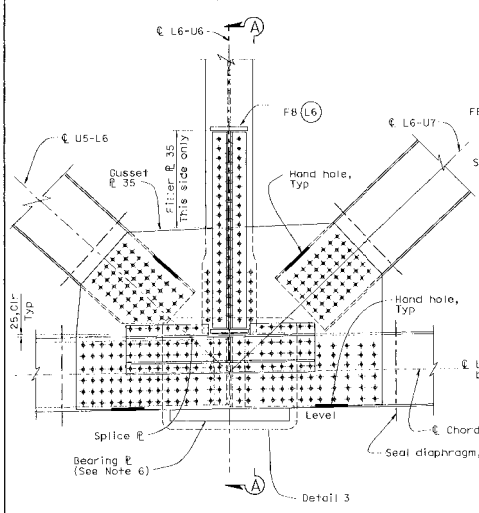

NORTH TRUSS ELEVATION L6

1:20

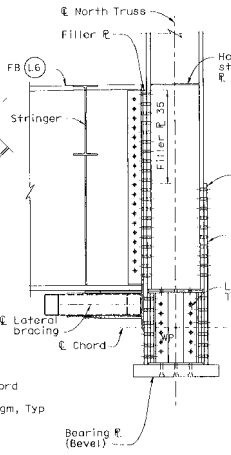

SECTION A-A

1:20

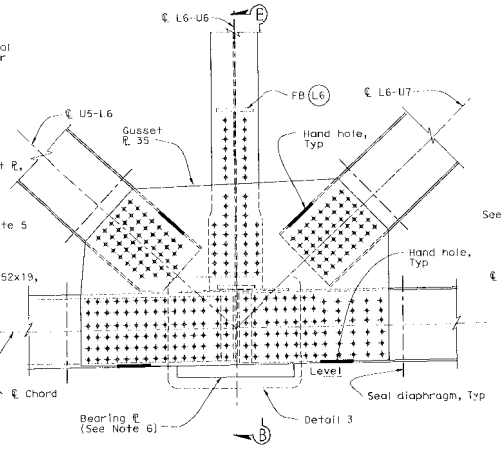

SOUTH TRUSS ELEVATION L6

1:20

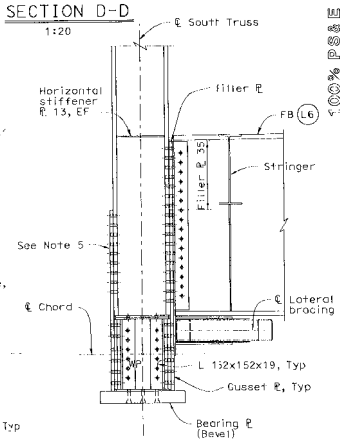

SECTION B-E

1:20

Notes:

1. For lateral bracing details, see "Lateral Bracing Details" sheets.
2. For additional truss notes and connection information not shown, see "Truss Joint Details No. 1" sheet.
3. For Floor Beam dimensions, see "Typical Section" sheet.
4. For seal diaphragm details see "Miscellaneous Details No.1" sheet.
5. For strongback bracket details, see "Miscellaneous Details No.2" sheet.
6. Min. dimension of bearing plate is 800x800x95. Dimensions to be adjusted based on Contractor's jacking system.

Caltrans Metric

DIST	COUNTY	ROUTE	KILOMETER POST TOTAL PROJECT	SHEET NO	TOTAL
04	SF	80	12.6/13.2		

REGISTERED CIVIL ENGINEER

4-7-08

PLANS APPROVAL DATE

REGISTERED PROFESSIONAL ENGINEER David Griffith No. C49125 Exp. 9/30/08 CIVIL STATE OF CALIFORNIA

The State of California or its officers or agents shall not be responsible for the accuracy or completeness of electronic copies of this plan sheet.

T.Y. LIN / MOFFATT & NICHOL
Two Harrison Street, Suite 300
San Francisco, CA 94105

ALL DIMENSIONS ARE IN MILLIMETERS UNLESS OTHERWISE SHOWN

SAN FRANCISCO OAKLAND BAY BRIDGE
EAST SPAN SEISMIC SAFETY PROJECT

EAST TIE-IN

TRUSS JOINT DETAILS NO. 8

T. Ostrom/M. Whiteside/A. Akinsanya	DESIGN	BY D. Griffith, S. Singh	CHECKED S. Cheng, H. Najm
DESIGN OVERSIGHT	DETAILS	BY A. Sutvausen, P. Zhao	CHECKED M. Irwin, A. Lee
SIGN OFF DATE	QUANTITIES	BY H. Nelson	CHECKED A. Lee

PREPARED FOR THE STATE OF CALIFORNIA DEPARTMENT OF TRANSPORTATION

M. Soh — PROJECT ENGINEER
S. Abbas — PROJECT MANAGER

BRIDGE NO. 34-0006 (TEMP.)
KILOMETER POST 12.6

CU
EA 0120R4

CONTRACT NO. 04-0120R4

CONTRACT CHANGE ORDER NO. 140

SHEET 39 OF 84

DESIGN DETAIL SHEET (METRIC) REV. 3/1/99 #DATE# #TIME# Pen Table File

ORIGINAL SCALE IN MILLIMETERS FOR REDUCED PLANS 0 10 20 30 40 50 60 70 80 90 100

DISREGARD PRINTS BEARING EARLIER REVISION DATES

REVISION DATES (PRELIMINARY STAGE ONLY)						SHEET	OF
DATE	BY					43	214

FILE =J:\SB\04-0120R1\ert\dgn\ort_d08.dgn

DATE PLOTTED => 4/7/2008 8:30:18 AM

USERNAME => JLee

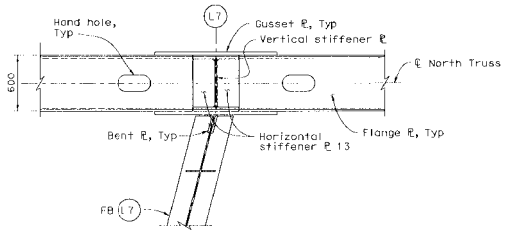

PLAN
1:20

Strongback bracket not shown for clarity.
North Truss shown, South Truss similar.

Notes:

1. For additional truss notes and connection information not shown, see "Truss Joint Details No. 1" sheet.
2. For Floor Beam dimensions, see "Typical Section" sheet.
3. For seal diaphragm details, see "Miscellaneous Details No.1" sheet.
4. For strongback bracket details, see "Miscellaneous Details No. 2" sheet.

DIST	COUNTY	ROUTE	KILOMETER POST TOTAL PROJECT	SHEET NO	TOTAL
04	SF	80	12.6/13.2		

REGISTERED CIVIL ENGINEER

4-7-08
PLANS APPROVAL DATE

The State of California or its officers or agents shall not be responsible for the accuracy or completeness of electronic copies of this plan sheet.

REGISTERED PROFESSIONAL ENGINEER — David Griffith — No. C49125 — Exp. 9/30/08 — CIVIL — STATE OF CALIFORNIA

T.Y. LIN / MOFFATT & NICHOL
Two Harrison Street, Suite 100
San Francisco, CA 94105

CONTRACT NO. 04-0122R4

CONTRACT CHANGE ORDER NO. 140

SHEET 40 OF 84

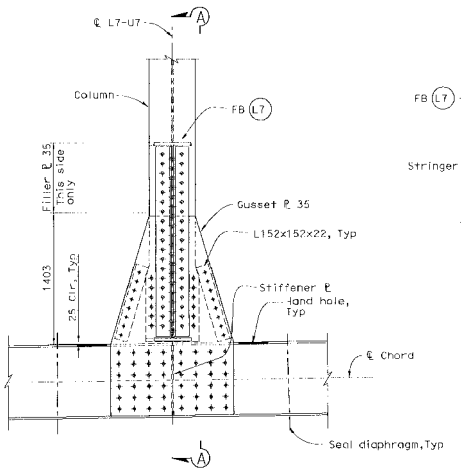

NORTH TRUSS ELEVATION (L7)
1:20

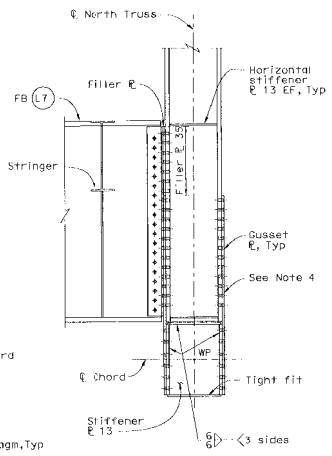

SECTION A-A
1:20

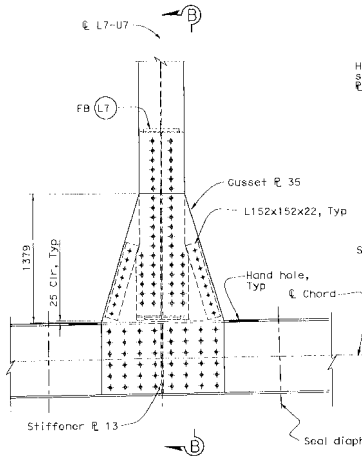

SOUTH TRUSS ELEVATION (L7)
1:20

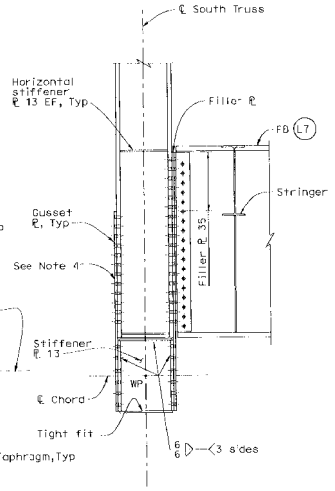

SECTION B-B
1:20

ALL DIMENSIONS ARE IN MILLIMETERS UNLESS OTHERWISE SHOWN

SAN FRANCISCO OAKLAND BAY BRIDGE
EAST SPAN SEISMIC SAFETY PROJECT

EAST TIE-IN

TRUSS JOINT DETAILS NO. 9

T. Ostrom/M. Whiteside/A. Akinsanya	DESIGN	BY D. Griffith, S. Singh	CHECKED S. Chang, H. Najm
DESIGN OVERSIGHT	DETAILS	BY A. Suthausen, P. Zhao	CHECKED M. Irwin, A. Lee
SIGN OFF DATE	QUANTITIES	BY H. Nelson	CHECKED A. Lee

PREPARED FOR THE STATE OF CALIFORNIA DEPARTMENT OF TRANSPORTATION

N. Soh — PROJECT ENGINEER
S. Abbas — PROJECT MANAGER

BRIDGE NO. 34-0006 (TEMP.)
KILOMETER POST 12.6

CU 0120R4
EA

DESIGN DETAIL SHEET SMETRO REV. 3/1/98
DATE TIME Pen Table File

ORIGINAL SCALE IN MILLIMETERS FOR REDUCED PLANS 0 10 20 30 40 50 60 70 80 90 100

DISREGARD PRINTS BEARING EARLIER REVISION DATES

REVISION DATES (PRC LATEST STATE ONLY)

NO.	DATE	NOTE
1	11/05	

SHEET 44 OF 214

FILE => c:\bb\04-0120l\et\dgn\skt|d09.dgn

USERNAME => ALee

DATE PLOTTED => 8/30/2007

TIME PLOTTED => 8:50:21 PM

100% PS&E

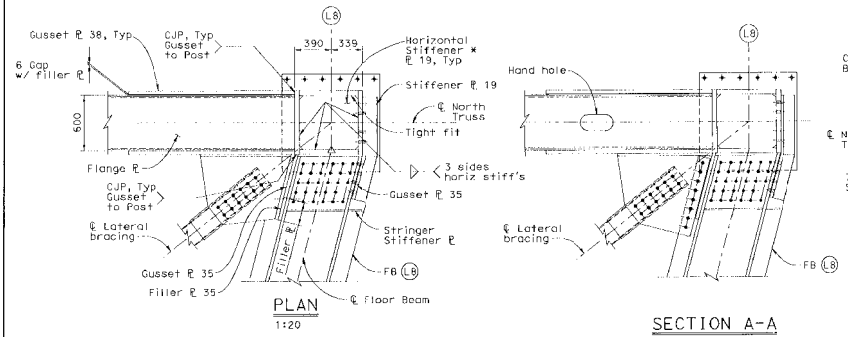

PLAN

1:20

* Stiffeners in line with top and bottom floor beam brackets and top flange of chord.

SECTION A-A

1:20

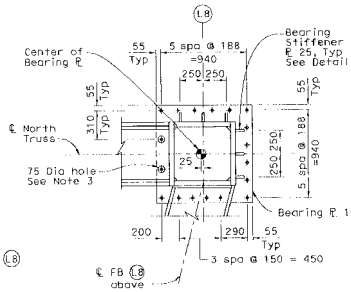

SECTION D-D

1:20

Notes:

1. For truss notes and connection information not shown, see "Truss Joint Details No. 1" sheet.
2. For floor beam lower brackat plan, see "Truss Joint Detail No. 2" sheet.
3. Provide 75 Dia hole in bottom flange plate of chord to accomodate bolts for bearing plates.

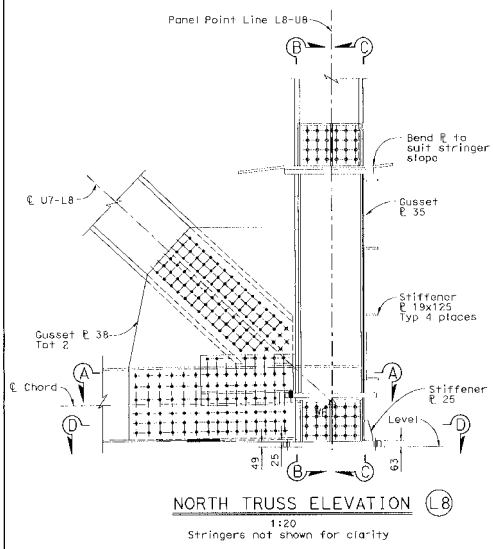

NORTH TRUSS ELEVATION L8

1:20

Stringers not shown for clarity

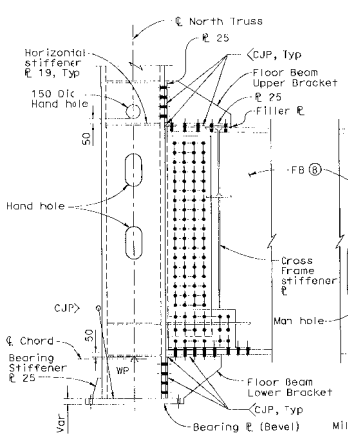

SECTION B-B

1:20

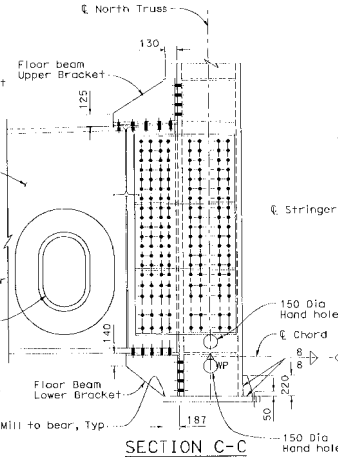

SECTION C-C

1:20

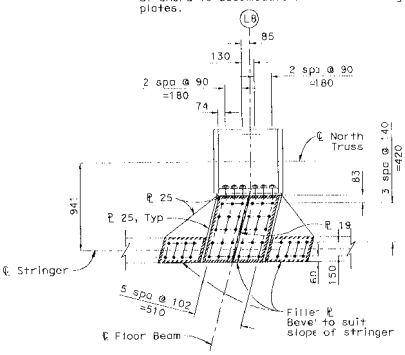

FLOOR BEAM UPPER BRACKET PLAN

1:20

FB not shown for clarity

ALL DIMENSIONS ARE IN MILLIMETERS UNLESS OTHERWISE SHOWN

DIST	COUNTY	ROUTE	KILOMETER POST TOTAL PROJECT	SHEET NO	TOTAL
04	SF	80	12.6/13.2		

David Griffith
REGISTERED CIVIL ENGINEER

4-7-08
PLANS APPROVAL DATE

REGISTERED PROFESSIONAL ENGINEER David Griffith No. C49125 Exp. 9/30/08 CIVIL STATE OF CALIFORNIA

The State of California or its officers or agents shall not be responsible for the accuracy or completeness of electronic copies of this plan sheet.

T.Y. LIN / MOFFATT & NICHOL
Two Harrison Street, Suite 500
San Francisco, CA 94105

CONTRACT NO. 04-0120R4

CONTRACT CHANGE ORDER NO. 140

SHEET 41 OF 84

T. Ostrom/M. Whiteside/A. Akinsanya	DESIGN	BY D. Griffith, S. Singh	CHECKED S. Cheng, H. Najm	PREPARED FOR THE STATE OF CALIFORNIA DEPARTMENT OF TRANSPORTATION	M. Sah
DESIGN OVERSIGHT	DETAILS	BY E. Pleshchuk, D. Singh	CHECKED M. Irwin, A. Lee		PROJECT ENGINEER
SIGN OFF DATE	QUANTITIES	BY H. Nelson	CHECKED A. Lee		S. Abbas PROJECT MANAGER

BRIDGE NO. 34-0006 (TEMP.)
KILOMETER POST 12.6

SAN FRANCISCO OAKLAND BAY BRIDGE
EAST SPAN SEISMIC SAFETY PROJECT

EAST TIE-IN

TRUSS JOINT DETAILS NO. 10

DESIGN DETAIL SHEET (METRIC) DGN: SW
DATE= TIME= Pen Table File

ORIGINAL SCALE IN MILLIMETERS FOR REDUCED PLANS 0 10 20 30 40 50 60 70 80 90 100

CU
EA 0120R4

FILE =p:\bb\04-012001\e1\dgn\akt]dt10.dgn

DISREGARD PRINTS BEARING EARLIER REVISION DATES

REVISION DATES (PRELIMINARY STAGE ONLY)

STATUS	MM/YY						

SHEET 45 OF 214

DATE PLOTTED => 4/7/2008 10:21:45 PM

USERNAME => Lee

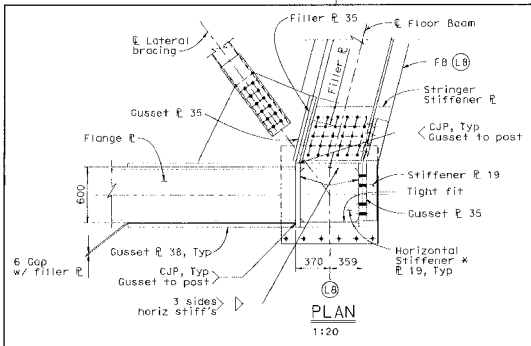

PLAN

1:20

* Stiffeners in line with top and bottom floor beam brackets and top flange of chord.

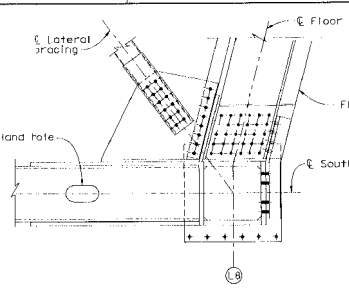

SECTION A-A

1:20

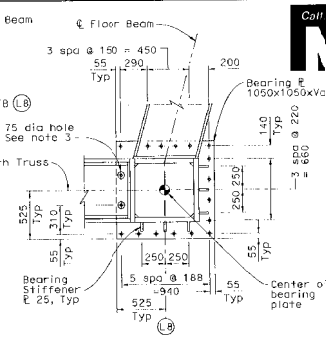

SECTION D-D

1:20

Notes:

1. For truss notes and connection information not shown, see "Truss Joint Details No. 1" sheet.
2. For floor beam lower bracket plan, see "Truss Joint Detail No. 2" sheet.
3. Provide 75 Dia hole in bottom cover plate of chord to accomodate bolts for bearing plate.

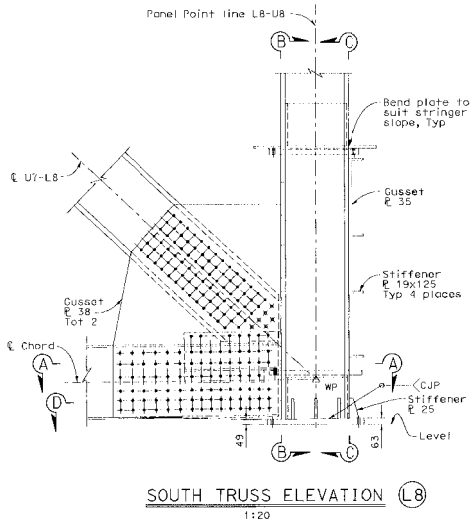

SOUTH TRUSS ELEVATION (L8)

1:20

Stringers and FB not shown for clarity

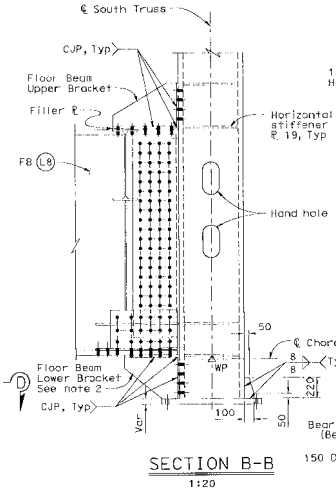

SECTION B-B

1:20

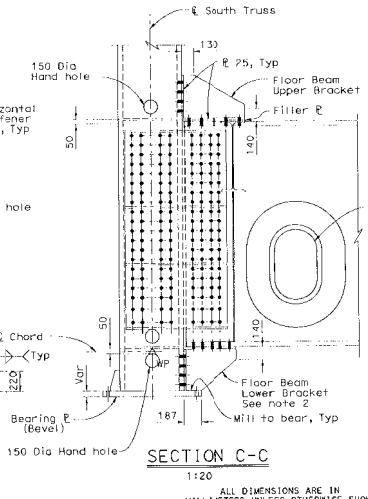

SECTION C-C

1:20

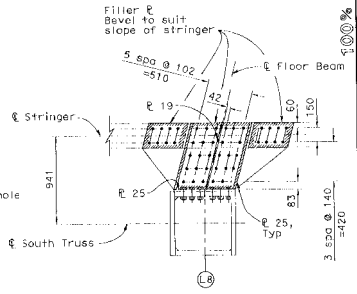

FLOOR BEAM UPPER BRACKET PLAN

1:20

FB not shown for clarity

ALL DIMENSIONS ARE IN MILLIMETERS UNLESS OTHERWISE SHOWN

DIST	COUNTY	ROUTE	KILOMETER POST TOTAL PROJECT	SHEET NO.	TOTAL
04	SF	80	12.6/13.2		

REGISTERED CIVIL ENGINEER

4-7-08

PLANS APPROVAL DATE

The State of California or its officers or agents shall not be responsible for the accuracy of completeness of electronic copies of this plan sheet.

David Griffith No. C49125 Exp. 9/30/08 CIVIL STATE OF CALIFORNIA

T.Y. LIN / MOFFATT & NICHOL
Two Harrison Street, Suite 300
San Francisco, CA 94105

CONTRACT NO. 04-0120R4

CONTRACT CHANGE ORDER NO. 140

SHEET 42 OF 84

T. Datrom/M. Whiteside/A. Aklinsanya	DESIGN	BY D. Griffith, S. Singh	CHECKED S. Cheng, H. Najm
DESIGN OVERSIGHT	DETAILS	BY E. Pleshchuk, D. Singh	CHECKED M. Irwin, A. Lee
SIGN OFF DATE	QUANTITIES	BY H. Nelson	CHECKED A. Lee

PREPARED FOR THE STATE OF CALIFORNIA
DEPARTMENT OF TRANSPORTATION

M. Son — PROJECT ENGINEER
S. Abbas — PROJECT MANAGER

BRIDGE NO. 34-0006 (TEMP.)
KILOMETER POST 12.6

SAN FRANCISCO OAKLAND BAY BRIDGE
EAST SPAN SEISMIC SAFETY PROJECT

EAST TIE-IN

TRUSS JOINT DETAILS NO. 11

DESIGN DETAIL SHEET (METRIC) (REV. 3/5/98)
DATE TIME Pen Table File

ORIGINAL SCALE IN MILLIMETERS FOR REDUCED PLANS 0 10 20 30 40 50 60 70 80 90 100

CU EA 0120R4

DISREGARD PRINTS BEARING EARLIER REVISION DATES

REVISION DATES (PRELIMINARY STAGE ONLY)

DATE						
4/08						

SHEET 46 OF 214

FILE =s:\pr\tb\04-0120r1\art\dgn\dkt_dt11.dgn

DATE PLOTTED => 10/27/27 PM

USERNAME => tlee

DIST	COUNTY	ROUTE	KILOMETER POST TOTAL PROJECT	SHEET No	TOTAL
04	SF	80	12.6/13.2		

REGISTERED CIVIL ENGINEER

4-7-08

PLANS APPROVAL DATE

The State of California or its officers or agents shall not be responsible for the accuracy or completeness of electronic copies of this plan sheet.

REGISTERED PROFESSIONAL ENGINEER
David Griffith
No. C49125
Exp. 9/30/08
CIVIL
STATE OF CALIFORNIA

T.Y. LIN / MOFFATT & NICHOL
Two Harrison Street, Suite 500
San Francisco, CA 94105

CONTRACT NO. 04-0120R4

CONTRACT CHANGE ORDER NO 140

SHEET 43 OF 84

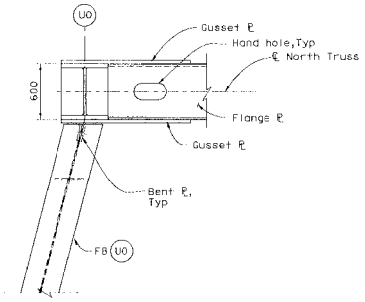

PLAN
1:20

Strongback bracket not shown for clarity.
North Truss shown, South Truss similar.

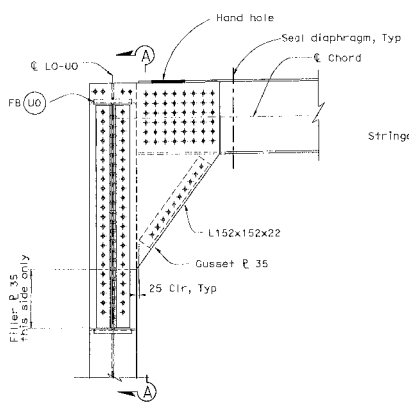

NORTH TRUSS ELEVATION UO
1:20

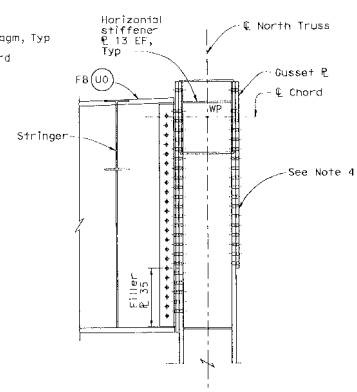

SECTION A-A
1:20

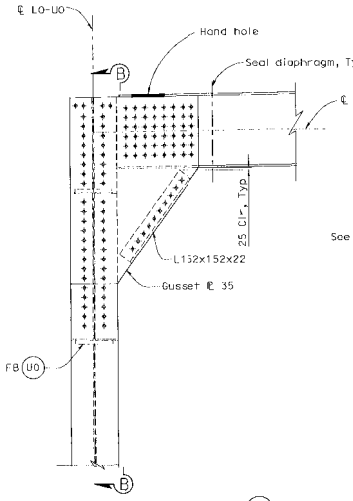

SOUTH TRUSS ELEVATION UO
1:20

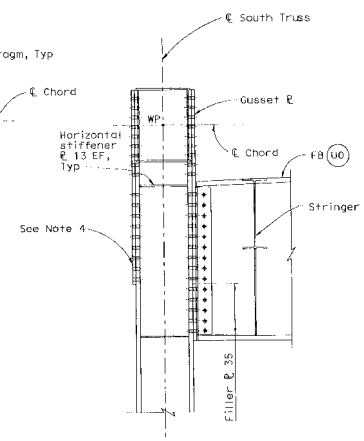

SECTION B-B
1:20

ALL DIMENSIONS ARE IN MILLIMETERS UNLESS OTHERWISE SHOWN

SAN FRANCISCO OAKLAND BAY BRIDGE
EAST SPAN SEISMIC SAFETY PROJECT

EAST TIE-IN

TRUSS JOINT DETAILS NO. 12

Y. Ostrom/M. Whiteside/A. Akinsanya	DESIGN	BY D. Griffith, S. Singh	CHECKED S. Cheng, H. Najm	PREPARED FOR THE STATE OF CALIFORNIA DEPARTMENT OF TRANSPORTATION	M. Sah
DESIGN OVERSIGHT	DETAILS	BY A. Sudhausen, P. Zhao	CHECKED M. Irwin, A. Lee		PROJECT ENGINEER S. Abbas
SIGN OFF DATE	QUANTITIES	BY H. Nelson	CHECKED A. Lee		PROJECT MANAGER

BRIDGE NO. 34-0006 (TEMP)
KILOMETER POST 12.6

DESIGN DETAIL SHEET (METRIC) (REV. 3/1/98)
●DATE● ●TIME● Pen Table File

ORIGINAL SCALE IN MILLIMETERS FOR REDUCED PLANS 0 10 20 30 40 50 60 70 80 90 100

CU
EA 0120R4

DISREGARD PRINTS BEARING EARLIER REVISION DATES

REVISION DATES (PRELIMINARY STAGE ONLY)

SHEET 47 OF 214

FILE => f:\bb\04-012001\efi\dgn\aktjd12.dgn

USERNAME => ALee DATE PLOTTED => 4/7/2008 TIME PLOTTED => 8:50:30 PM FILE => pt\bb\04-012001\efi\dgn\aktjd12.dgn

100% PS&E

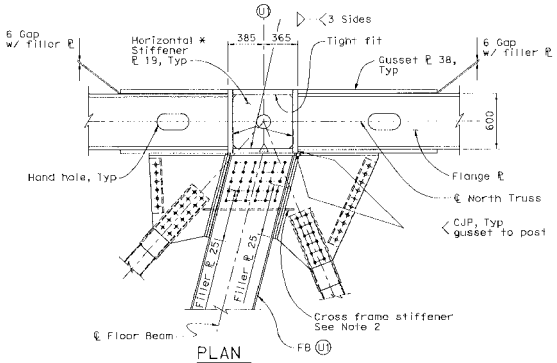

PLAN

1:20

* Stiffeners in line with top and bottom of floor beam brackets and bottom flange of chord.

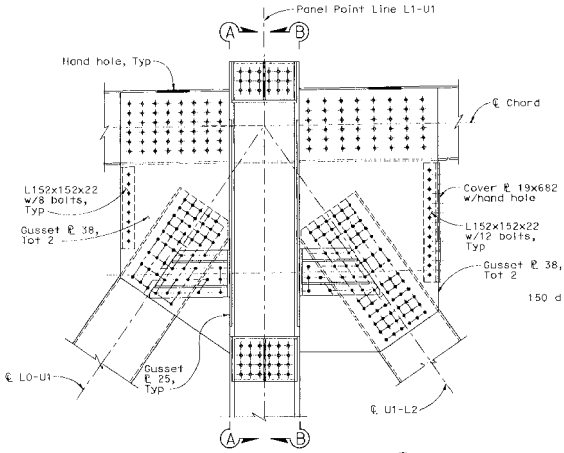

NORTH TRUSS ELEVATION (U1)

1:20

Stringers & FB not shown for clarity

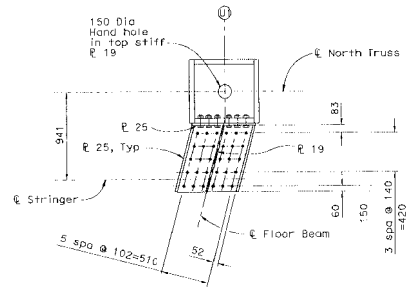

FLOOR BEAM UPPER BRACKET PLAN

1:20

FB not shown for clarity

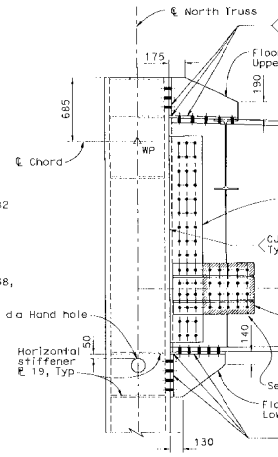

SECTION A-A

1:20

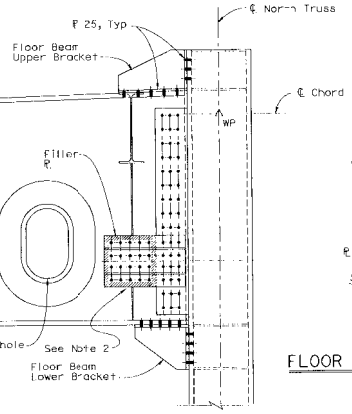

SECTION B-B

1:20

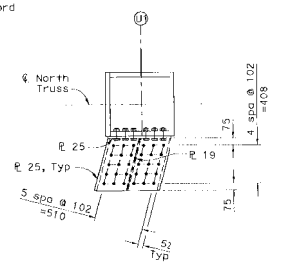

FLOOR BEAM LOWER BRACKET PLAN

1:20

FB not shown for clarity

DIST	COUNTY	ROUTE	KILOMETER POST TOTAL PROJECT	SHEET NO	TOTAL
04	SF	80	12.6/13.2		

REGISTERED CIVIL ENGINEER

4-7-08

PLANS APPROVAL DATE

The State of California or its officers or agents shall not be responsible for the accuracy or completeness of electronic copies of this plan sheet.

REGISTERED PROFESSIONAL ENGINEER — Ronald Griffith — No. C49129 — Exp. 9/30/08 — CIVIL — STATE OF CALIFORNIA

T.Y. LIN / MOFFATT & NICHOL
Two Harrison Street, Suite 500
San Francisco, CA 94105

Notes:

1. For additional truss notes and connection information not shown, see "Truss Joint Details No. 1" sheet.
2. Discontinue cross-frame stiffener at lateral bracing bracket.

CONTRACT NO. 64-012084

CONTRACT CHANGE ORDER NO 140

SHEET 44 OF 84

ALL DIMENSIONS ARE IN MILLIMETERS UNLESS OTHERWISE SHOWN

SAN FRANCISCO-OAKLAND BAY BRIDGE EAST SPAN SEISMIC SAFETY PROJECT

EAST TIE-IN

TRUSS JOINT DETAILS NO. 13

T. Ostrom/M. Whiteside/A. Akinsanya	DESIGN	D. Griffith, S. Singh	S. Cheng, H. Wajn
DESIGN OVERSIGHT	DETAILS	E. Peshchuk, D. Singh	W. Irwin, A. Lee
SIGN OFF DATE	QUANTITIES	H. Nelson	A. Lee

PREPARED FOR THE STATE OF CALIFORNIA DEPARTMENT OF TRANSPORTATION

M. Soh — PROJECT ENGINEER
S. Abbas — PROJECT MANAGER

BRIDGE NO. 34-0006 — LT&MP KILOMETER POST 12.6

CU
EA 012084

DISREGARD PRINTS BEARING EARLIER REVISION DATES

REVISION DATES (PRELIMINARY STAGE ONLY)									SHEET	OF
									48	214

DESIGN DETAIL SHEET MICRO-REV. 3/1/98
BDATE# 07NOV# Pen Table File

ORIGINAL SCALE IN MILLIMETERS FOR REDUCED PLANS 0 10 20 30 40 50 60 70 80 90 100

FILE => p:\bb\64-012001\ert\dgn\aktjd13.dgn

USERNAME => AKES

DATE PLOTTED => 4/7/2008 07:12:30 PM

FILE => p:\bb\64-012001\ert\dgn\aktjd13.dgn

100% Plans

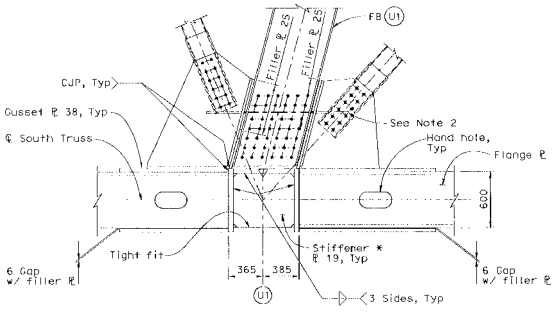

PLAN

1:20

* Stiffeners in line with top flange of chord and top and bottom of floor beam brackets

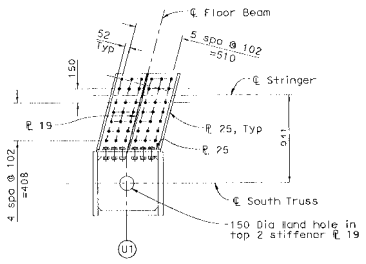

FLOOR BEAM UPPER BRACKET PLAN (AS SHOWN)

1:20

FB not shown for clarity
Lower Bracket similar

Caltrans Metric

DIST	COUNTY	ROUTE	KILOMETER POST TOTAL PROJECT	SHEET No	TOTAL
04	SF	80	12.6/13.2		

REGISTERED CIVIL ENGINEER

4-7-08

PLANS APPROVAL DATE

The State of California or its officers or agents shall not be responsible for the accuracy or completeness of electronic copies of this plan sheet.

REGISTERED PROFESSIONAL ENGINEER — David Griffith — No. C49125 — Exp. 9/30/08 — CIVIL — STATE OF CALIFORNIA

T.Y. LIN / MOFFATT & NICHOL
Two Harrison Street, Suite 500
San Francisco, CA 94105

Notes:

1 For truss notes and connection information not shown, see "Truss Joint Details No. 1" sheet.

2 Discontinue Cross Frame stiffener plate at lateral bracing bracket. Shear tab plate connection on bottom of stringer may be omitted at this location.

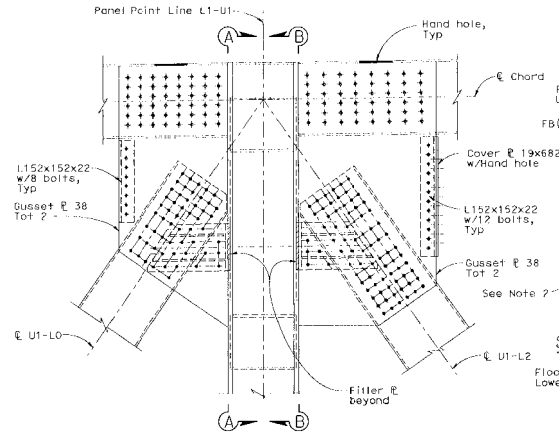

Note: Stringers and FB not shown for clarity.

SOUTH TRUSS ELEVATION (U1)

1:20

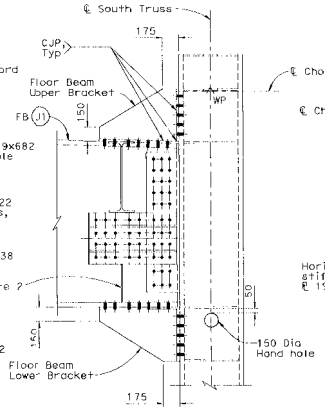

SECTION A-A

1:20

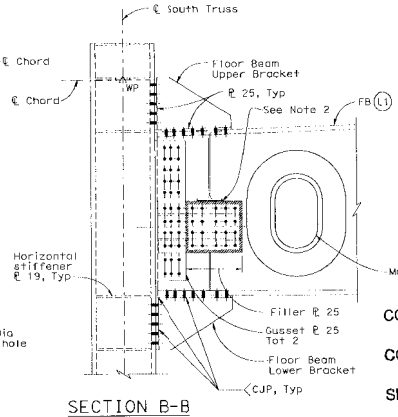

SECTION B-B

1:20

ALL DIMENSIONS ARE IN MILLIMETERS UNLESS OTHERWISE SHOWN

CONTRACT NO. 04-0120R4

CONTRACT CHANGE ORDER NO. 140

SHEET 45 OF 84

T. Ostrom/M. Whitesides/A. Akinsanya	DESIGN	D. Griffith, S. Singh	S. Cheng, H. Najm	PREPARED FOR THE STATE OF CALIFORNIA DEPARTMENT OF TRANSPORTATION	M. Soh
DESIGN OVERSIGHT	DETAILS	E. Pleshchuk, D. Singh	W. Irwin, A. Lee		S. Abbas
SIGN OFF DATE	QUANTITIES	H. Nelson	A. Lee		PROJECT MANAGER

BRIDGE NO. 34-0006 (TEMP)
KILOMETER POST 12.6

CU
EA 0120R4

SAN FRANCISCO OAKLAND BAY BRIDGE
EAST SPAN SEISMIC SAFETY PROJECT

EAST TIE-IN

TRUSS JOINT DETAILS NO. 14

SHEET 49 OF 214

DESIGN DETAIL SHEET (METRIC) REV. 3/1/99
BDATE# BTIME# Pen Table File

ORIGINAL SCALE IN MILLIMETERS FOR RESIZED PLANS 0 10 20 30 40 50 60 70 80 90 100

DISREGARD PRINTS BEARING EARLIER REVISION DATES

REVISION DATES (PRELIMINARY STAGE ONLY)

FILE => p:\sb\04 012001\e1\sgn\okt\d14.dgn

100% PS&E

DATE => 4/7/2008 12:12:32 PM
USERNAME => ALEE

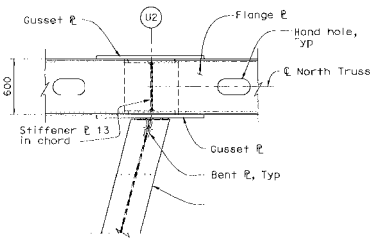

PLAN
1:20

Strongback bracket not shown for clarity.
North Truss shown, South Truss similar.

Notes:

1. For additional truss notes and connection information not shown, see "Truss Joint Details No. 1" sheet.
2. For Floor Beam dimensions, see "Typical Section" sheet.
3. For seal diaphragm details, see "Miscellaneous Details No.1" sheet.
4. For strongback bracket details, see "Miscellaneous Details No.2" sheet.

Caltrans Metric

DIST	COUNTY	ROUTE	KILOMETER POST TOTAL PROJECT	SHEET NO.	TOTAL
04	SF	80	12.6/13.2		

REGISTERED CIVIL ENGINEER

4-7-08
PLANS APPROVAL DATE

REGISTERED PROFESSIONAL ENGINEER David Griffith No. C49125 Exp. 9/30/08 CIVIL STATE OF CALIFORNIA

The State of California or its officers or agents shall not be responsible for the accuracy or completeness of electronic copies of this plan sheet.

T.Y. LIN / MOFFATT & NICHOL
Two Harrison Street, Suite 500
San Francisco, CA 94105

CONTRACT NO. 04-0120R4

CONTRACT CHANGE ORDER NO 140

SHEET 46 OF 84

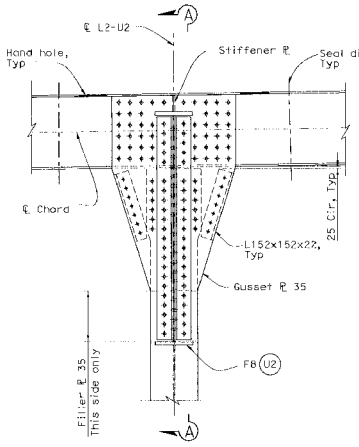

NORTH TRUSS ELEVATION U2
1:20

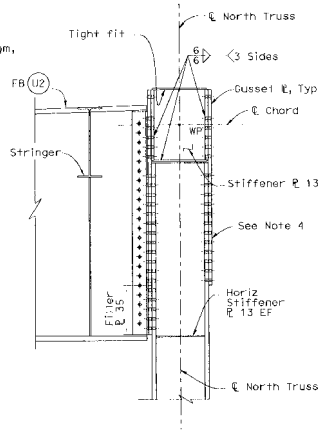

SECTION A-A
1:20

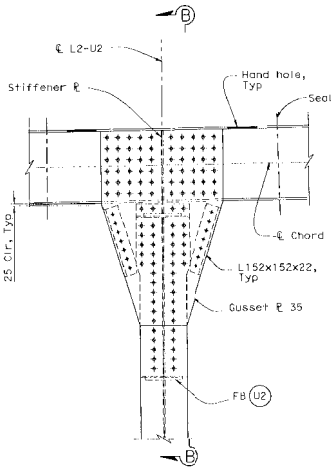

SOUTH TRUSS ELEVATION U2
1:20

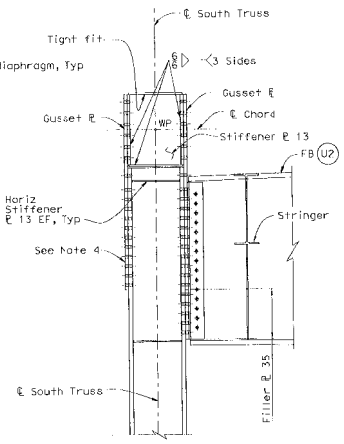

SECTION B-B
1:20

ALL DIMENSIONS ARE IN MILLIMETERS UNLESS OTHERWISE SHOWN

SAN FRANCISCO OAKLAND BAY BRIDGE
EAST SPAN SEISMIC SAFETY PROJECT

EAST TIE-IN

TRUSS JOINT DETAILS NO. 15

T. Ostrom/M. Whiteside/A. Akinsanya	DESIGN	BY D. Griffith, S. Singh	CHECKED S. Cheng, H. Najm	M. Soh	BRIDGE NO. 34-0006 (T&MP)
DESIGN OVERSIGHT	DETAILS	BY A. Suthausen, P. Zhao	CHECKED M. Irwin, A. Lee	S. Abbas	KILOMETER POST 12.6
SIGN OFF DATE	QUANTITIES	BY H. Nelson	CHECKED A. Lee	PROJECT MANAGER	

PREPARED FOR THE STATE OF CALIFORNIA DEPARTMENT OF TRANSPORTATION

CU 04 EA 0120R4

DESIGN DETAIL SHEET (METRIC) REV. 3/1/99
SCALE = 1:1 METER = Pen Table File

ORIGINAL SCALE IN MILLIMETERS FOR REDUCED PLANS 0 10 20 30 40 50 60 70 80 90 100

FILE => s:\sbb\04-0120r4\ea\dgn\oakt|d15.dgn

DISREGARD PRINTS DEARING EARLIER REVISION DATES

REVISION DATES (PRELIMINARY STAGE ONLY)

SHEET 50 OF 214

DATE PLOTTED => 4/7/2008 7:50:40 PM
USERNAME => ALAM

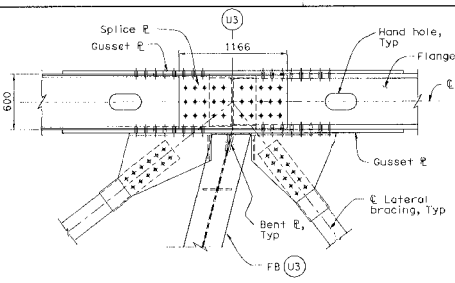

PLAN
1:20

Strongback bracket not shown for clarity.
North Truss shown, South Truss similar

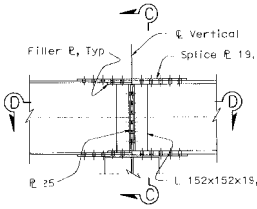

DETAIL 4
1:20
(View is along ℄ Truss.
Bolts not shown for clarity.)

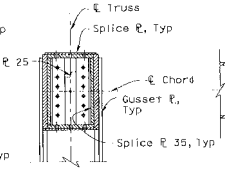

SECTION C-C
1:20

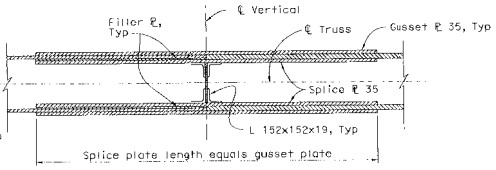

SECTION D-D
1:20

Notes:

1. For lateral bracing details, see "Lateral Bracing Details" sheets.
3. For additional truss notes and connection information not shown, see "Truss Joint Details No. 1" sheet.
3. For Floor Beam dimensions, see "Typical Section" sheet.
4. For seal diaphragm details, see "Miscellaneous Details No.1" sheet.
5. For strongback bracket details, see "Miscellaneous Details No.2" sheets.

Caltrans Metric

DIST	COUNTY	ROUTE	KILOMETER POST TOTAL PROJECT	SHEET No.	TOTAL
04	SF	80	12.6/13.2		

REGISTERED CIVIL ENGINEER
4-7-08
PLANS APPROVAL DATE
The State of California or its officers or agents shall not be responsible for the accuracy or completeness of electronic copies of this plan sheet.

REGISTERED PROFESSIONAL ENGINEER — David Griffith — No. C49825 — Exp. 9/30/08 — CIVIL — STATE OF CALIFORNIA

T.Y. LIN / MOFFATT & NICHOL
Two Harrison Street, Suite 500
San Francisco, CA 94105

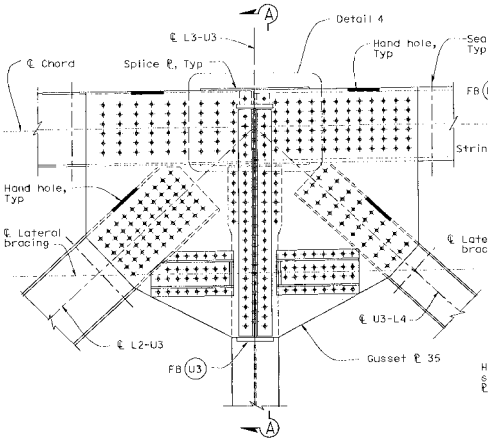

NORTH TRUSS ELEVATION U3
1:20

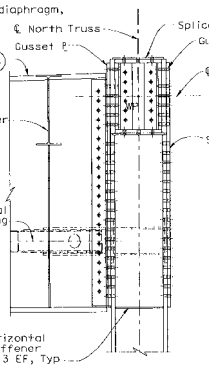

SECTION A-A
1:20

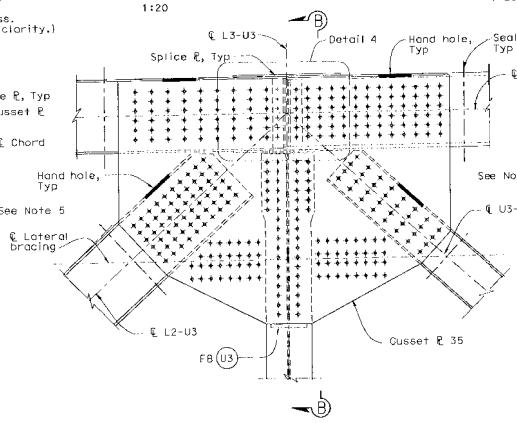

SOUTH TRUSS ELEVATION U3
1:20

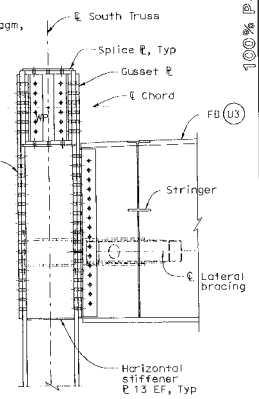

SECTION B-B
1:20

ALL DIMENSIONS ARE IN MILLIMETERS UNLESS OTHERWISE SHOWN

SAN FRANCISCO OAKLAND BAY BRIDGE
EAST SPAN SEISMIC SAFETY PROJECT

EAST TIE-IN

TRUSS JOINT DETAILS NO. 16

CONTRACT NO. 04-0120R4

CONTRACT CHANGE ORDER NO. 140

SHEET 47 OF 84

T. Ostrom/M. Whitesides/A. Aklnsanya	DESIGN	D. Griffith, S. Singh	S. Cheng, H. Najm	PREPARED FOR THE STATE OF CALIFORNIA DEPARTMENT OF TRANSPORTATION
DESIGN OVERSIGHT	DETAILS	A. Sudhausen, P. Zhao	W. Irwin, A. Lee	W. Soh — PROJECT ENGINEER; S. Abbas — PROJECT MANAGER
SIGN OFF DATE	QUANTITIES	H. Nelson	A. Lee	12.6

BRIDGE NO. 34-0006 (TEMP.)
KILOMETER POST

CU 0120N
EA 0120N

DESIGN DETAIL SHEET (METRIC) REV. 3/1/99
DATE ⊕ TIME ⊕ Pen Table File

ORIGINAL SCALE IN MILLIMETERS FOR REDUCED PLANS 0 10 20 30 40 50 60 70 80 90 100

FILE => p:\bb\04-012001\ef\dgn\ak1jdt6.dgn

DISREGARD PRINTS BEARING EARLIER REVISION DATES →

REVISION DATES (PRELIMINARY STAGE ONLY)							SHEET	OF
11/05	11/08						51	214

DATE PLOTTED => 4/7/2008 TIME PLOTTED => 8:58:42 AM
USERNAME => ALEE
100% Basis

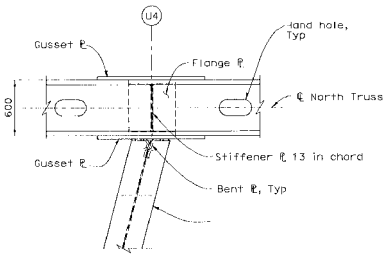

PLAN
1:20

Strongback bracket not shown for clarity.
North Truss shown, South Truss similar.

Notes:

1. For additional truss notes and connection information not shown, see "Truss Joint Details No. 1" sheet.
2. For Floor Beam dimensions, see "Typical Section" sheet.
3. For seal diaphragm details, see "Miscellaneous Details No.1" sheet.
4. For strongback bracket details, see "Miscellaneous Details No.2" sheet.

Caltrans Metric

DIST	COUNTY	ROUTE	KILOMETER POST TOTAL PROJECT	SHEET NO	TOTAL
04	SF	80	12.6/13.2		

REGISTERED CIVIL ENGINEER

4-7-08
PLANS APPROVAL DATE

David Griffith, No. C49125, Exp. 9/30/08, CIVIL, STATE OF CALIFORNIA

The State of California or its officers or agents shall not be responsible for the accuracy or completeness of electronic copies of this plan sheet.

T.Y. LIN / MOFFATT & NICHOL
Two Harrison Street, Suite 300
San Francisco, CA 94105

CONTRACT NO. 04-012084

CONTRACT CHANGE ORDER NO. 140

SHEET 48 OF 84

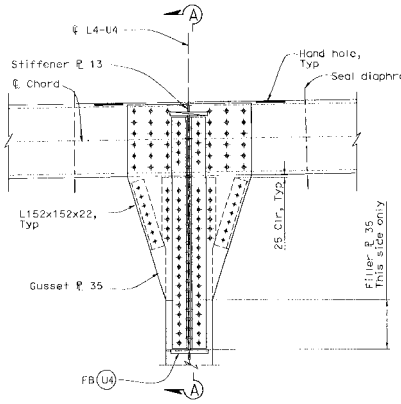

NORTH TRUSS ELEVATION U4
1:20

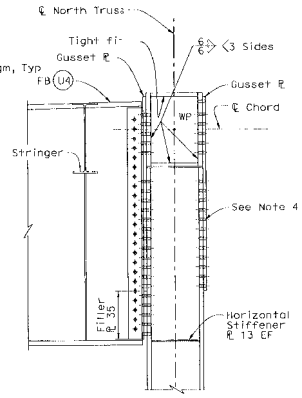

SECTION A-A
1:20

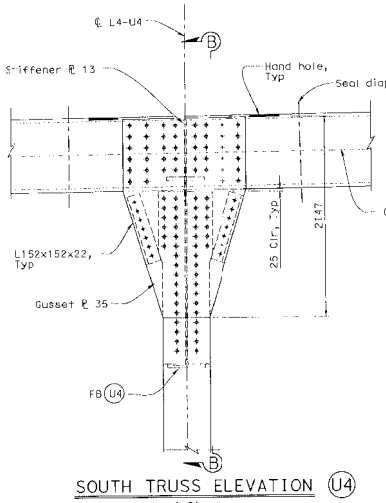

SOUTH TRUSS ELEVATION U4
1:20

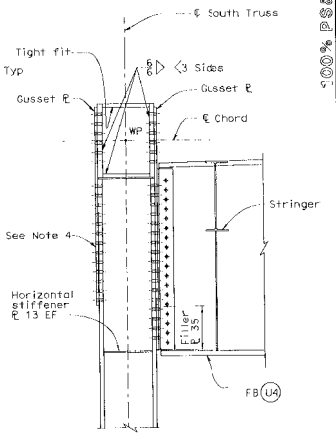

SECTION B-B
1:20

ALL DIMENSIONS ARE IN MILLIMETERS UNLESS OTHERWISE SHOWN

SAN FRANCISCO OAKLAND BAY BRIDGE
EAST SPAN SEISMIC SAFETY PROJECT

EAST TIE-IN

TRUSS JOINT DETAILS NO. 17

T. Ostrom/M. Whitesides/A. Akinsanya	DESIGN	BY D. Griffith, S. Singh	CHECKED S. Cheng, H. Najm
DESIGN OVERSIGHT	DETAILS	BY A. Sudhausen, P. Zhao	CHECKED W. Irwin, A. Lee
SIGN OFF DATE	QUANTITIES	BY H. Nelson	CHECKED A. Lee

PREPARED FOR THE STATE OF CALIFORNIA
DEPARTMENT OF TRANSPORTATION

M. Sah — PROJECT ENGINEER
S. Abbas — PROJECT MANAGER

BRIDGE NO. 34-0006 (TEMP)
KILOMETER POST 12.6

CU EA 012084

DISREGARD PRINTS BEARING EARLIER REVISION DATES

REVISION DATES (PRELIMINARY STAGE ONLY)

SHEET 52 OF 214

DESIGN DETAIL SHEET (METRIC) REV. 3/4/98
RDATE# RTIME# Pen Table File

ORIGINAL SCALE IN MILLIMETERS FOR REVISED PLANS 0 10 20 30 40 50 60 70 80 90 100

FILE => p:\bb\04-012084\ef\dgn\04t17.dgn

PLOT SCALE = 1.0000 '/ INCH
PLOTTED => 8/31/2008 11:07:29 AM
FILE => p:\bb\04-012084\ef\dgn\04t17.dgn
USERNAME => ALee

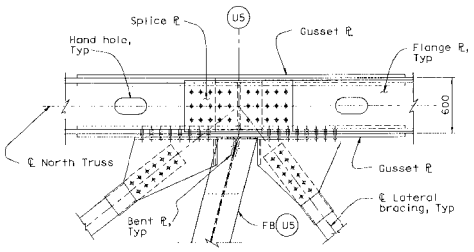

PLAN
1:20

Strongback bracket not shown for clarity.
North Truss shown, South Truss similar.

Notes:

1. For lateral bracing details, see "Lateral Bracing Details" sheets.
2. For additional truss notes and connection information not shown, see "Truss Joint Details No. 1" sheet.
3. For Floor Beam dimensions, see "Typical Section" sheet.
4. For Detail 4, see "Truss Joint Details No. 16" sheet.
5. For seal diaphragm details, see "Miscellaneous Details No.1" sheet.
6. For strongback bracket details, see "Miscellaneous Details No.2" sheet.

Caltrans Metric

DIST	COUNTY	ROUTE	KILOMETER POST TOTAL PROJECT	SHEET NO.	TOTAL
04	SF	80	12.6/13.2		

REGISTERED CIVIL ENGINEER

4-7-08
PLANS APPROVAL DATE

The State of California or its officers or agents shall not be responsible for the accuracy or completeness of electronic copies of this plan sheet.

REGISTERED PROFESSIONAL ENGINEER — David Griffith — No. C49825 — Exp. 9/30/08 — CIVIL — STATE OF CALIFORNIA

T.Y.LIN / MOFFATT & NICHOL
Two Harrison Street, Suite 500
San Francisco, CA 94105

CONTRACT NO. 04-0120R4

CONTRACT CHANGE ORDER NO 140

SHEET 19 OF 84

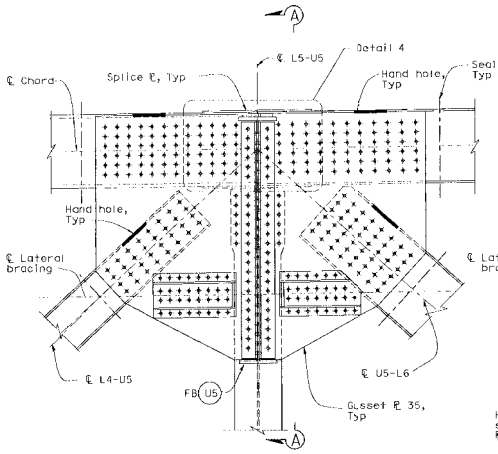

NORTH TRUSS ELEVATION U5
1:20

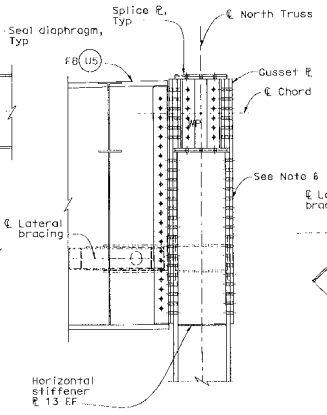

SECTION A-A
1:20

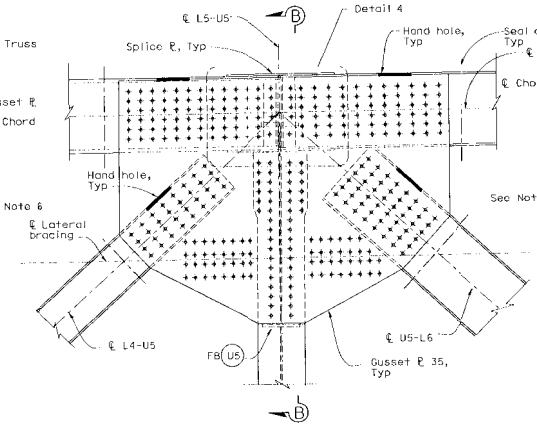

SOUTH TRUSS ELEVATION U5
1:20

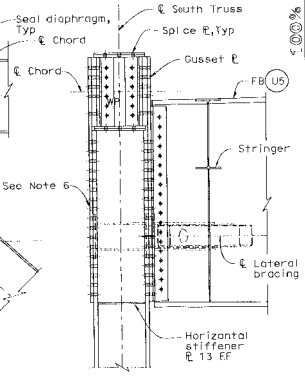

SECTION B-B
1:20

ALL DIMENSIONS ARE IN MILLIMETERS UNLESS OTHERWISE SHOWN

SAN FRANCISCO OAKLAND BAY BRIDGE
EAST SPAN SEISMIC SAFETY PROJECT

EAST TIE-IN

TRUSS JOINT DETAILS NO. 18

T. Ostrom/M. Whiteside/A. Akinsanya			
DESIGN OVERSIGHT			
SIGN OFF DATE			
DESIGN	BY D. Griffith, S. Singh	CHECKED S. Cheng, H. Najm	
DETAILS	BY A. Sudhausen, P. Zhao	CHECKED M. Irwin, A. Lee	
QUANTITIES	BY H. Nelson	CHECKED A. Lee	

PREPARED FOR THE STATE OF CALIFORNIA DEPARTMENT OF TRANSPORTATION

M. Sah	PROJECT ENGINEER
S. Abbas	PROJECT MANAGER

BRIDGE NO. 34-0006 (LEMP)
KILOMETER POST 12.6

CU
EA 0120R4

SHEET 53 OF 214

DESIGN DETAIL SHEET (METRIC) REV. 3/1/99
BDATE= BTIME= Pen Table File

ORIGINAL SCALE IN MILLIMETERS FOR MODELED PLANS
0 10 20 30 40 50 60 70 80 90 100

DISREGARD PRINTS BEARING EARLIER REVISION DATES →

REVISION DATES (PRELIMINARY STAGE ONLY)
11AM7 4/4M

FILE =s3:\bb\04-0120R4\ert\dgn\sht\jd18.dgn

DATE PLOTTED => 8-APR-08
TIME PLOTTED => 11:35:04
FILE =s3:\bb\04-0120R4\ert\dgn\sht\jd18.dgn

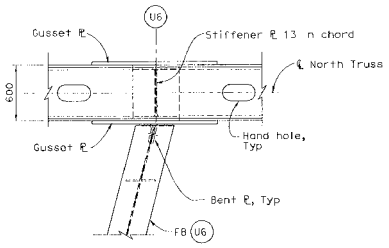

PLAN
1:20

Strongback bracket not shown for clarity.
North Truss shown, South Truss similar.

Notes:

1. For additional truss notes and connection information not shown, see "Truss Joint Details No. 1" sheet.
2. For Floor Beam dimensions, see "Typical Section" sheet.
3. For seal diaphragm details, see "Miscellaneous Details No.1" sheet.
4. For strongback bracket details, see "Miscellaneous Details No.2" sheet.

DIST	COUNTY	ROUTE	KILOMETER POST TOTAL PROJECT	SHEET NO	TOTAL
04	SF	80	12.6/13.2		

REGISTERED CIVIL ENGINEER

4-7-08
PLANS APPROVAL DATE

David Griffith, No. C49125, Exp. 9/30/08, CIVIL, REGISTERED PROFESSIONAL ENGINEER, STATE OF CALIFORNIA

The State of California or its officers or agents shall not be responsible for the accuracy of completeness of electronic copies of this plan sheet.

T.Y. LIN / MOFFATT & NICHOL
Two Harrison Street, Suite 500
San Francisco, CA 94105

CONTRACT NO. 04-0120R4

CONTRACT CHANGE ORDER NO 140

SHEET 50 OF 84

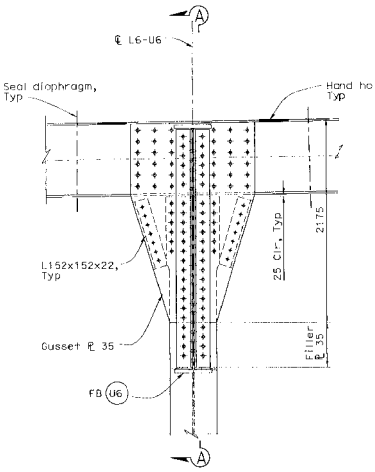

NORTH TRUSS ELEVATION U6
1:20

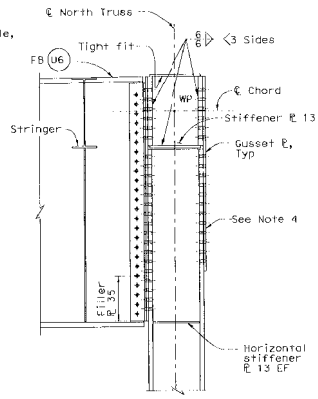

SECTION A-A
1:20

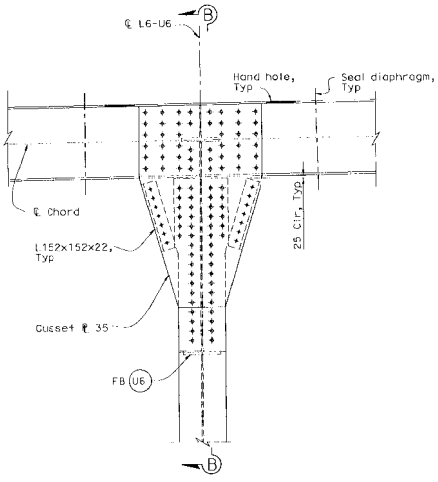

SOUTH TRUSS ELEVATION U6
1:20

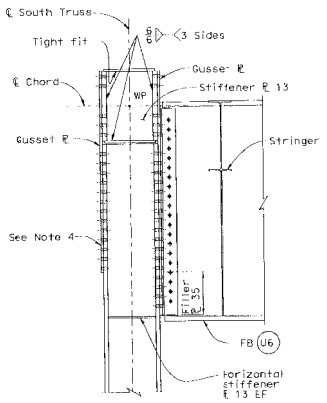

SECTION B-B
1:20

ALL DIMENSIONS ARE IN MILLIMETERS UNLESS OTHERWISE SHOWN

SAN FRANCISCO OAKLAND BAY BRIDGE
EAST SPAN SEISMIC SAFETY PROJECT

EAST TIE-IN

TRUSS JOINT DETAILS NO. 19

T. Ostrom/M. Whiteside/A. Akinsanya	DESIGN	D. Griffith, S. Singh	S. Cheng, H. Najm
DESIGN OVERSIGHT	DETAILS	A. Sudhausen, P. Zhao	W. Irwin, A. Lee
SIGN OFF DATE	QUANTITIES	N. Nelson	A. Lee

PREPARED FOR THE STATE OF CALIFORNIA DEPARTMENT OF TRANSPORTATION

M. Soh — PROJECT ENGINEER
S. Abbas — PROJECT MANAGER

BRIDGE NO. 34-0006 (TEMP.)
KILOMETER POST 12.6

CU 0120R4
EA 0120R4

DESIGN DETAIL SHEET (METRIC) REV. 3/1/98
SCALE* 6"=1'-0" Pen Table File

ORIGINAL SCALE IN MILLIMETERS FOR REDUCED PLANS 0 10 20 30 40 50 60 70 80 90 100

DISREGARD PRINTS BEARING EARLIER REVISION DATES →

REVISION DATES (PRELIMINARY STAGE ONLY)

SHEET 54 OF 214

FILE = p:\br\ob\04-012001\elt\dgn\okt1at19.dgn

DATE PLOTTED => 4/7/2008 TIME PLOTTED => 8:50:49 PM

USERNAME => klarm

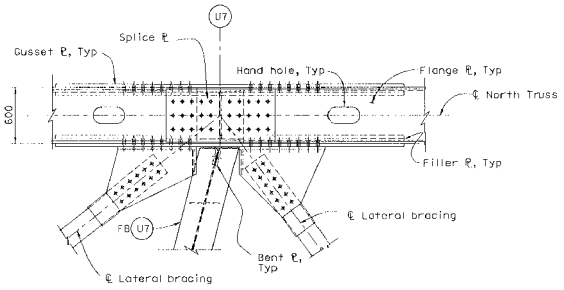

PLAN
1:20

Strongback bracket not shown for clarity.
North Truss shown, South Truss similar.

Notes:

1. For lateral bracing details, see "Lateral Bracing Details" sheets.
2. For additional truss notes and connection information not shown, see "Truss Joint Details No. 1" sheet.
3. For Floor Beam dimensions, see "Typical Section" sheet.
4. For Detail 4, see "Truss Joint Details No. 16" sheet.
5. For seal diaphragm details, see "Miscellaneous Details No.1" sheet.
6. For strongback bracket details, see "Miscellaneous Details No.2" sheet.

Caltrans Metric

DIST	COUNTY	ROUTE	KILOMETER POST TOTAL PROJECT	SHEET No	TOTAL
04	SF	80	12.6/13.2		

REGISTERED CIVIL ENGINEER
4-7-08
PLANS APPROVAL DATE

REGISTERED PROFESSIONAL ENGINEER
David Griffith
No. C49125
Exp. 9/30/08
CIVIL
STATE OF CALIFORNIA

The State of California or its officers or agents shall not be responsible for the accuracy or completeness of electronic copies of this plan sheet.

T.Y. LIN / MOFFATT & NICHOL
Two Harrison Street, Suite 500
San Francisco, CA 94105

CONTRACT NO. 04-0120R4
CONTRACT CHANGE ORDER NO 140
SHEET 51 OF 84

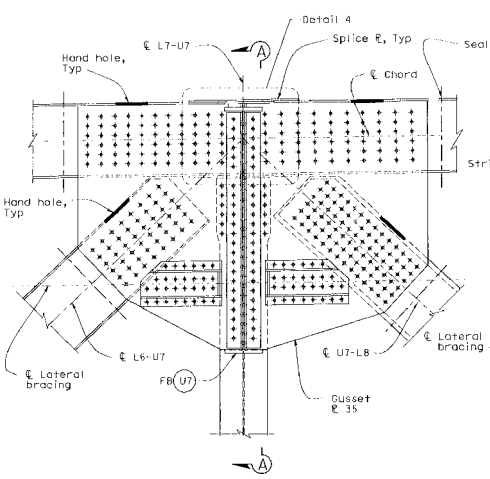

NORTH TRUSS ELEVATION U7
1:20

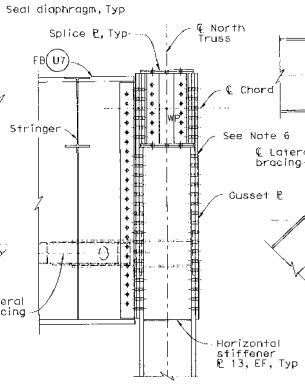

SECTION A-A
1:20

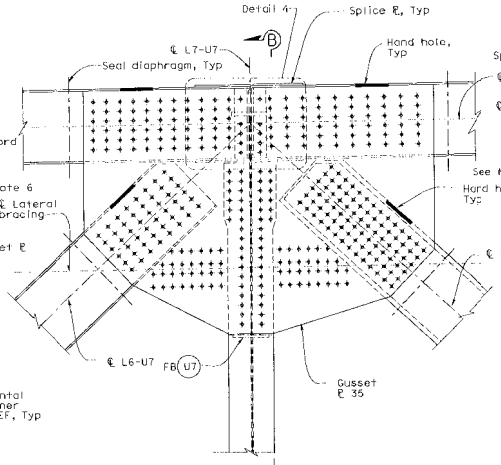

SOUTH TRUSS ELEVATION U7
1:20

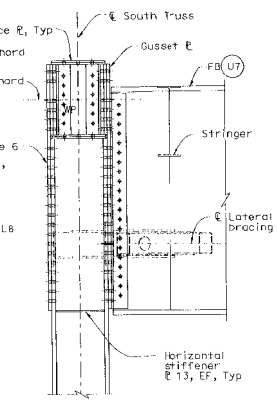

SECTION B-B
1:20

ALL DIMENSIONS ARE IN MILLIMETERS UNLESS OTHERWISE SHOWN

SAN FRANCISCO OAKLAND BAY BRIDGE
EAST SPAN SEISMIC SAFETY PROJECT

EAST TIE-IN

TRUSS JOINT DETAILS NO. 20

T. Ostrom/M. Whiteside/A. Akinsanya
DESIGN OVERSIGHT
SIGN OFF DATE

DESIGN	BY D. Griffith, S. Singh	CHECKED S. Cheng, H. Najm	
DETAILS	BY A. Sudhausen, P. Zhao	CHECKED M. Irwin, A. Lee	
QUANTITIES	BY H. Nelson	CHECKED A. Lee	

PREPARED FOR THE STATE OF CALIFORNIA DEPARTMENT OF TRANSPORTATION

M. Soh
PROJECT ENGINEER
S. Abbas
PROJECT MANAGER

BRIDGE NO. 34-0006 (TEMP)
KILOMETER POST 12.6

DESIGN DETAIL SHEET (METRIC) REV. 3/1/98
DATE: TIME: Pen Table File

ORIGINAL SCALE IN MILLIMETERS FOR REDUCED PLANS 0 10 20 30 40 50 60 70 80 90 100

CU
EA 0120R4

DISREGARD PRINTS BEARING EARLIER REVISION DATES

REVISION DATES (PRELIMINARY STAGE ONLY)
11/2/01 1/1/05

SHEET 55 OF 214

FILE => p:\bb\04-012001\et1\dgn\aktj020.dgn

100% PS&E

USERNAME => ALee DATE PLOTTED => 4/7/2008 TIME PLOTTED => 8:50:51 PM

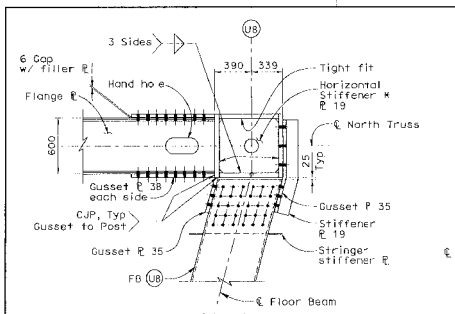

PLAN

1:20

* Stiffeners in line with top and bottom of floor beam brackets and bottom flange of chord

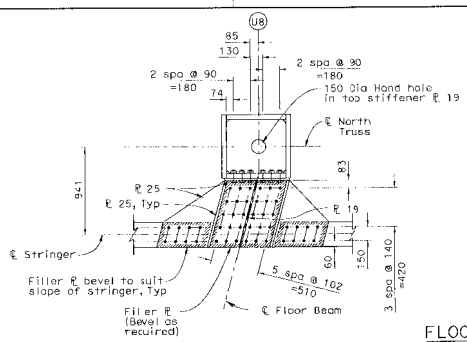

FLOOR BEAM UPPER BRACKET PLAN

1:20

FB not shown for clarity

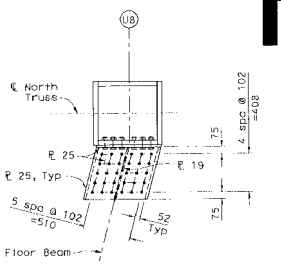

FLOOR BEAM LOWER BRACKET PLAN

1:20

FB not shown for clarity

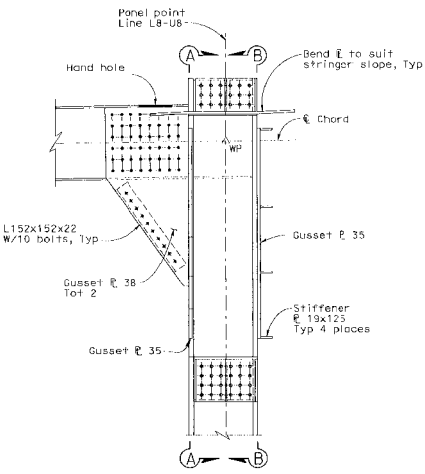

NORTH TRUSS ELEVATION U8

1:20

Stringers and FB not shown for clarity

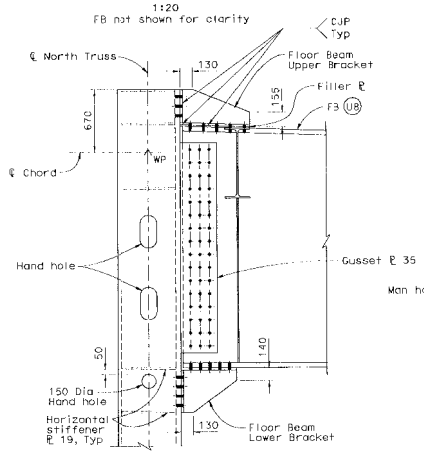

SECTION A-A

1:20

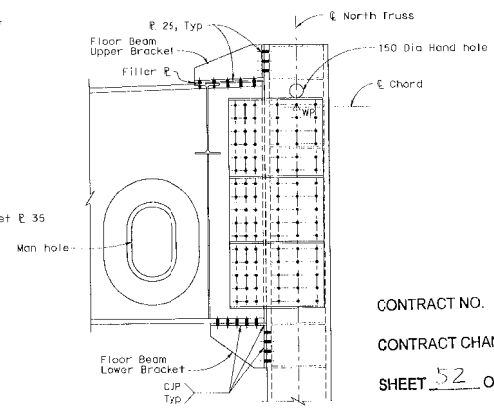

SECTION B-B

1:20

DIST	COUNTY	ROUTE	KILOMETER POST TOTAL PROJECT	SHEET NO	TOTAL
04	SF	80	12 6/13.2		

REGISTERED CIVIL ENGINEER

4-7-08

PLANS APPROVAL DATE

The State of California or its officers or agents shall not be responsible for the accuracy or completeness of electronic copies of this plan sheet.

REGISTERED PROFESSIONAL ENGINEER David Griffith No. C49125 Exp. 9/30/08 CIVIL STATE OF CALIFORNIA

T.Y. LIN / MOFFATT & NICHOL
Two Harrison Street, Suite 500
San Francisco, CA 94105

CONTRACT NO. 04-0120R4

CONTRACT CHANGE ORDER NO 140

SHEET 52 OF 84

Notes:

1. For additional truss notes and connection information not shown, see "Truss Joint Details No. 1" sheet.

ALL DIMENSIONS ARE IN MILLIMETERS UNLESS OTHERWISE SHOWN

SAN FRANCISCO OAKLAND BAY BRIDGE
EAST SPAN SEISMIC SAFETY PROJECT

EAST TIE-IN

TRUSS JOINT DETAILS NO. 21

T. Ostrom/M. Whiteside/A. Akinsanya
DESIGN OVERSIGHT

SIGN OFF DATE

DESIGN DETAIL SHEET (METRIC) REV. 3/1/98
●DATE● ●TIME● Pen Table File

DESIGN	BY D. Griffith, S. Singh	CHECKED S. Cheng, H. Najm	
DETAILS	BY E. Pleshchuk, D. Singh	CHECKED M. Irwin, A. Lee	
QUANTITIES	BY H. Nelson	CHECKED A. Lee	

ORIGINAL SCALE IN MILLIMETERS FOR REDUCED PLANS 0 10 20 30 40 50 60 70 80 90 100

PREPARED FOR THE STATE OF CALIFORNIA DEPARTMENT OF TRANSPORTATION

M. Soh
PROJECT ENGINEER
S. Abbas
PROJECT MANAGER

BRIDGE NO. 34-0006 (TEMP)
KILOMETER POST 12.6

CU
EA 0120R1

DISREGARD PRINTS BEARING EARLIER REVISION DATES

REVISION DATES (PRELIMINARY STAGE ONLY) 11/6/07 6/1/08

SHEET 56 OF 214

FILE => p:\bb\04-012001\eti\dgn\aktjd21.dgn

100% PS&E

FILE => p:\bb\04-012001\eti\dgn\aktjd21.dgn

TIME PLOTTED => 10:27:34 PM

DATE PLOTTED => 4/7/2008

USERNAME => ALee

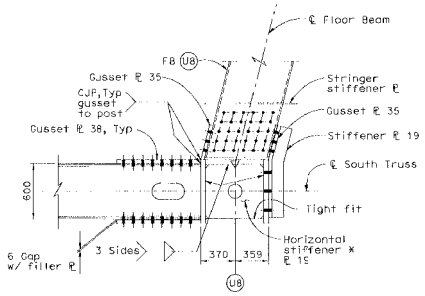

PLAN

1:20

* Stiffeners in line with top and bottom of floor beam brackets and bottom flange of chord.

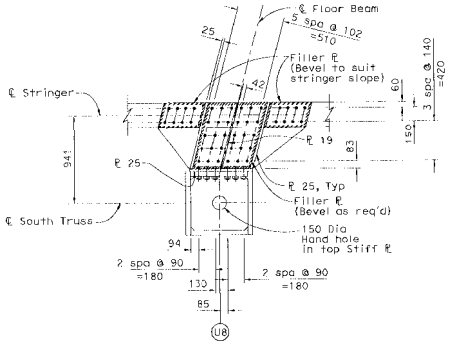

FLOOR BEAM UPPER BRACKET PLAN

1:20

FB not shown for clarity

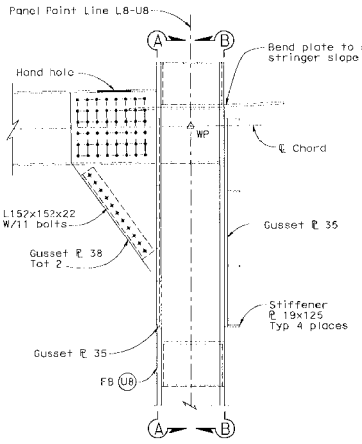

SOUTH TRUSS ELEVATION U8

1:20

Stringers and FB not shown for clarity

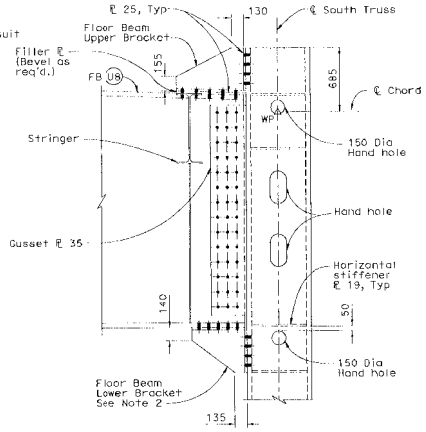

SECTION A-A

1:20

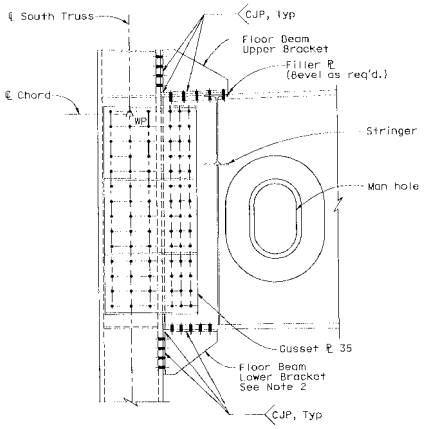

SECTION B-B

1:20

Notes:

1. For additional truss notes and connection information not shown, see "Truss Joint Details No. 1" sheet.
2. For Floor Beam Lower Bracket details, see "Truss Joint Details No. 21" sheet.

DIST	COUNTY	ROUTE	KILOMETER POST TOTAL PROJECT	SHEET No	TOTAL
04	SF	80	12 6/13.2		

REGISTERED CIVIL ENGINEER

4-7-08

PLANS APPROVAL DATE

The State of California or its officers or agents shall not be responsible for the accuracy or completeness of electronic copies of this plan sheet.

REGISTERED PROFESSIONAL ENGINEER — David Griffith — No. C49125 — Exp. 9/30/08 — CIVIL — STATE OF CALIFORNIA

T.Y. LIN / MOFFATT & NICHOL
Two Harrison Street, Suite 500
Oakland, CA 94105

CONTRACT NO 04-0120R4

CONTRACT CHANGE ORDER NO 140

SHEET 53 OF 81

ALL DIMENSIONS ARE IN MILLIMETERS UNLESS OTHERWISE SHOWN

SAN FRANCISCO OAKLAND BAY BRIDGE
EAST SPAN SEISMIC SAFETY PROJECT

EAST TIE-IN

TRUSS JOINT DETAILS NO. 22

T. Ostrom/M. Whiteside/A. Akinsanya	DESIGN	BY D. Griffith, S. Singh	CHECKED S. Chang, H. Najm
DESIGN OVERSIGHT	DETAILS	BY E. Pleshchuk, O. Singh	CHECKED M. Irwin, A. Lee
SIGN OFF DATE	QUANTITIES	BY H. Nelson	CHECKED A. Lee

PREPARED FOR THE STATE OF CALIFORNIA DEPARTMENT OF TRANSPORTATION

M. Soh — PROJECT ENGINEER
S. Abbas — PROJECT MANAGER

BRIDGE NO. 34-0006 TEMP
KILOMETER POST 12.6

CU
EA 0120R4

DISREGARD PRINTS BEARING EARLIER REVISION DATES

REVISION DATES (PRELIMINARY STAGE ONLY)

SHEET 57 OF 214

DESIGN DETAIL SHEET (METRIC) (REV. 3/1/99)
SCALE# #TIME# Pen Table File

ORIGINAL SCALE IN MILLIMETERS FOR PLOTTED PLANS 0 10 20 30 40 50 60 70 80 90 100

FILE =>p:\06\04-0120R1\en\sign\det\d22.dgn

DATE PLOTTED => 4/7/2008 10:27:36 PM

USERNAME => ALGS

100% PLOTS

Notes:

1. For floor beam connection to truss, see "Truss Joint Details" sheets.
2. Transverse & cross frame stiffeners shall be plumb and parallel to ℄ stringer.
3. For stringer connection details, see "Stringer Details" sheets.
4. For stringer shear stud locations, see "Stringer Details" sheets.
5. For floor beam web & flange dimensions, see "Typical Section" sheet.
6. All dimensions shown are measured along center line of floor beam.
7. For stiffeners to tension flange connections see "Steel Girder Details" sheets.
8. The Contractor may install a field splice at the location shown for each floor beam. The Contractor shall submit the field splice details to the Engineer for approval.
9. For limits and spacing of floor beam shear studs and limits of bond breaker, see "Floor Beam Shear Stud Spacing Diagram" on "Floor Beam Details No. 3" sheet.
10. Lateral bracing brackets not shown for clarity. For stiffener configuration required at lateral bracing bracket connections, see "Lateral Bracing Layout" & "Lateral Bracing Details" sheets.

Caltrans Metric

DIST	COUNTY	ROUTE	KILOMETER POST TOTAL PROJECT	SHEET No	TOTAL
04	SF	80	12.6/13.2		

Mark Chen
REGISTERED CIVIL ENGINEER
4-7-08
PLANS APPROVAL DATE

REGISTERED PROFESSIONAL ENGINEER
Chi Mark Chen
No. C 40582
Exp. 03/31/09
CIVIL
STATE OF CALIFORNIA

The State of California or its officers or agents shall not be responsible for the accuracy or completeness of electronic copies of this plan sheet.

T.Y.LIN / MOFFATT & NICHOL
Two Harrison Street, Suite 500
San Francisco, CA 94105

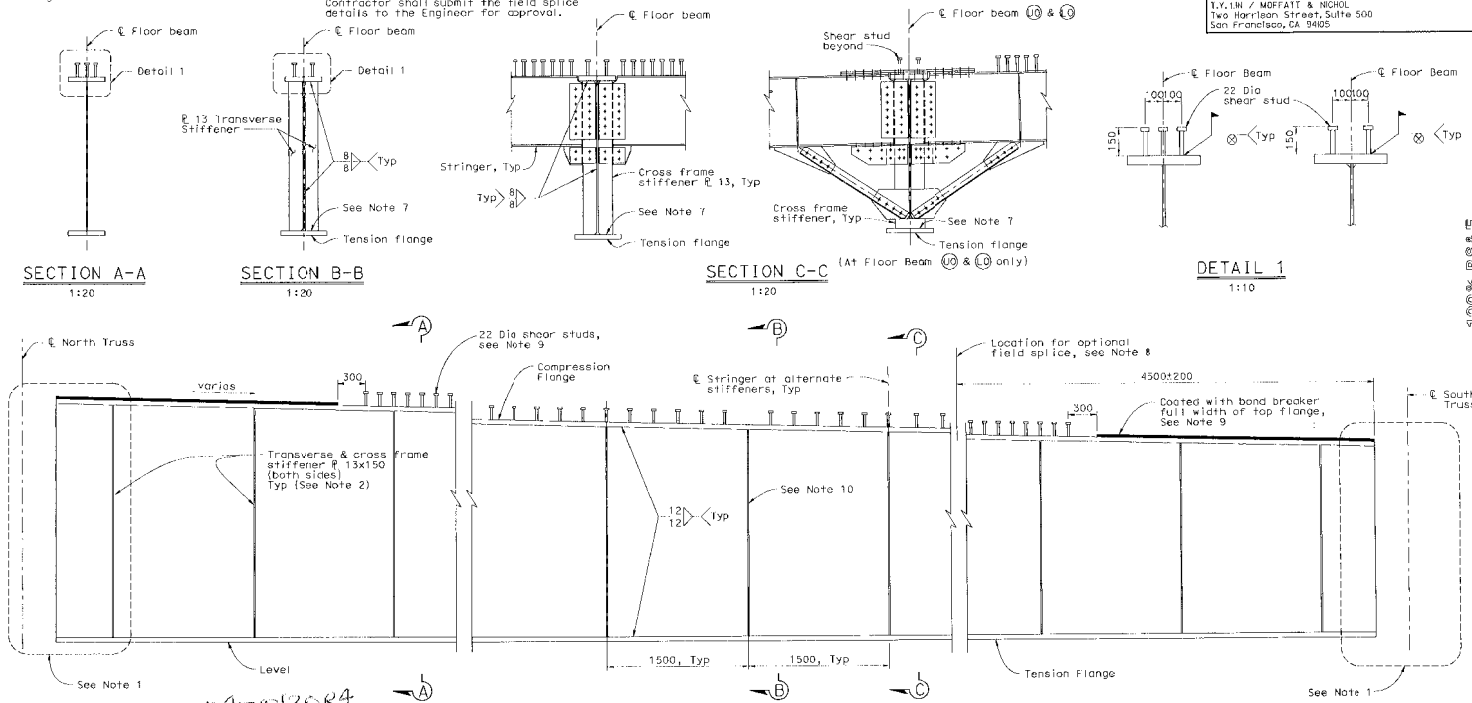

SECTION A-A
1:20

SECTION B-B
1:20

SECTION C-C
1:20

DETAIL 1
1:10

FLOOR BEAM U0, L0, U2, L2, U3, L3, U4, L4, U5, L5, U6, L6, U7, L7
1:20

CONTRACT NO. 04-0120R4

CONTRACT CHANGE ORDER NO 140

ALL DIMENSIONS ARE IN MILLIMETERS UNLESS OTHERWISE SHOWN

SAN FRANCISCO OAKLAND BAY BRIDGE
EAST SPAN SEISMIC SAFETY PROJECT

EAST TIE-IN

FLOOR BEAM DETAILS NO. 1

T. Ostrom/M. Whiteside/A. Ak... DESIGN OVERSIGHT

SIGN OFF DATE

SHEET 54 OF 84

DESIGN BY M. Chen, K. Liu — CHECKED S. Cheng, H. Najm, H. Nelson
DETAILS BY S. Lee — CHECKED M. Irwin, A. Lee
QUANTITIES BY H. Nelson — CHECKED A. Lee

PREPARED FOR THE STATE OF CALIFORNIA DEPARTMENT OF TRANSPORTATION

M. Soh — PROJECT ENGINEER
S. Abbas — PROJECT MANAGER

BRIDGE NO. 34-0006 (TEMP)
KILOMETER POST 12.6

CU
EA 0120R4

DISREGARD PRINTS BEARING EARLIER REVISION DATES

REVISION DATES (PRELIMINARY STAGE ONLY) 11/05 4/7/08

SHEET 58 OF 214

DESIGN DETAIL SHEET (METRIC) REV. 3/1/99
DATE TIME Pen Table File

ORIGINAL SCALE IN MILLIMETERS FOR REDUCED PLANS 0 10 20 30 40 50 60 70 80 90 100

FILE =>p:\bb\04-012001\eti\dgn\ckfbd01.dgn

100% PS&E

USERNAME => Alice DATE PLOTTED => 4/7/2008 TIME PLOTTED => 8:15:03 PM

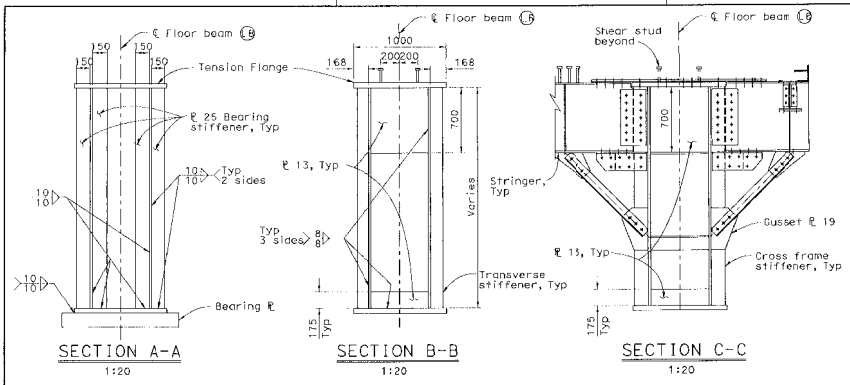

SECTION A-A
1:20

SECTION B-B
1:20

SECTION C-C
1:20

Notes:

1. See "Floor Beam Details No. 1" for typical floor beam notes.
2. For stringer connection details, see "Stringer Details" sheets.
3. For man hole and hand hole details, see "Man Hole & Hand Hole Details" sheet.
4. For floor beam connection to truss, see "Truss Joint Details" sheet.
5. For limits and spacing of Floor Beam shear studs, and limits of bond breaker, see "Floor Beam Shear Stud Spacing Diagram" on "Floor Beam Details No. 3" sheet.
6. For Lateral bracing brackets, see "Lateral Bracing Layout" & "Lateral Bracing Details" sheet.
7. Where weld contacts gusset plate or any connection plate, the surface of weld shall be ground smooth.

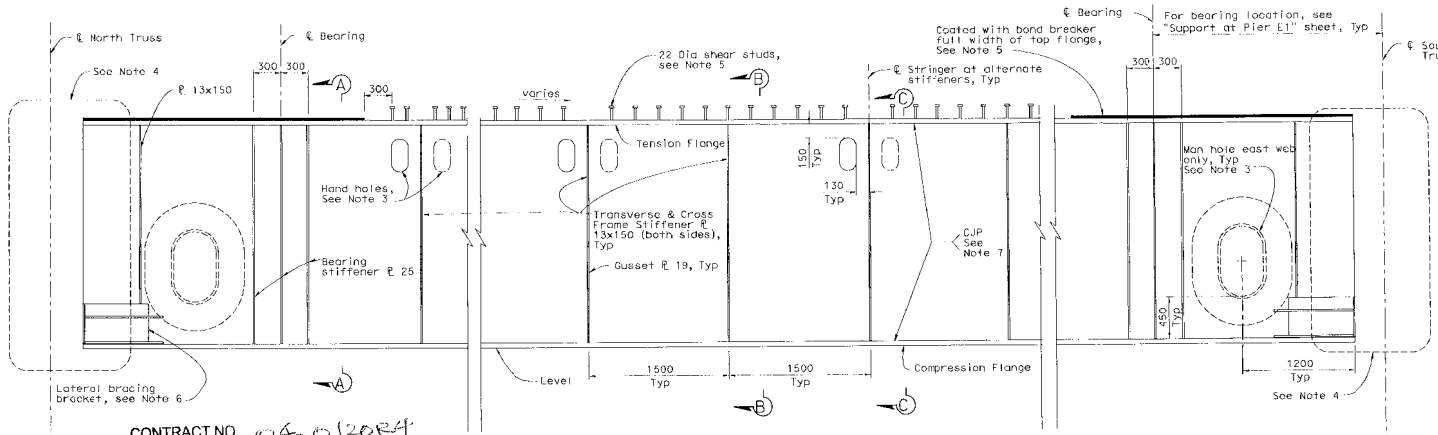

CONTRACT NO. 04-0120R4

CONTRACT CHANGE ORDER NO 140

SHEET 55 OF 84

FLOOR BEAM L8
1:20

DIST	COUNTY	ROUTE	KILOMETER POST TOTAL PROJECT	SHEET NO	TOTAL
04	SF	80	12.6/13.2		

Mark Chen
REGISTERED CIVIL ENGINEER

4-7-08
PLANS APPROVAL DATE

The State of California or its officers or agents shall not be responsible for the accuracy or completeness of electronic copies of this plan sheet.

REGISTERED PROFESSIONAL ENGINEER
Chi Mark Chen
No. C 40582
Exp. 03/31/09
CIVIL
STATE OF CALIFORNIA

T.Y. LIN / MOFFATT & NICHOL
Two Harrison Street, Suite 500
San Francisco, CA 94105

100% PS&E

ALL DIMENSIONS ARE IN MILLIMETERS UNLESS OTHERWISE SHOWN

SAN FRANCISCO OAKLAND BAY BRIDGE
EAST SPAN SEISMIC SAFETY PROJECT

EAST TIE-IN

FLOOR BEAM DETAILS NO. 2

T. Ostrom/M. Whiteside/A. Akinsanya
DESIGN OVERSIGHT

SIGN OFF DATE

DESIGN DETAIL SHEET (METRIC) (REV. 3/1/98)
DATE TIME Pen Table File

DESIGN	BY M. Chen, K. Liu	CHECKED S. Cheng, H. Najm, H. Nelson	
DETAILS	BY S. Lee	CHECKED M. Irwin, A. Lee	
QUANTITIES	BY H. Nelson	CHECKED A. Lee	

ORIGINAL SCALE IN MILLIMETERS FOR REDUCED PLANS 0 10 20 30 40 50 60 70 80 90 100

PREPARED FOR THE STATE OF CALIFORNIA DEPARTMENT OF TRANSPORTATION

M. Sah
PROJECT ENGINEER
S. Abbas
PROJECT MANAGER

BRIDGE NO. 34-0006 (TEMP)
KILOMETER POST 12.6

CU
EA 0120R

DISREGARD PRINTS BEARING EARLIER REVISION DATES

REVISION DATES (PRELIMINARY STAGE ONLY)

SHEET 59 OF 214

FILE =>p:\bb\04-012001\cti\dgn\akfbd02.dgn

DIST	COUNTY	ROUTE	KILOMETER POST TOTAL PROJECT	SHEET No	TOTAL
04	SF	80	12 6/13.2		

Mark Chen
REGISTERED CIVIL ENGINEER

4-7-08
PLANS APPROVAL DATE

The State of California or its officers or agents shall not be responsible for the accuracy or completeness of electronic copies of this plan sheet.

REGISTERED PROFESSIONAL ENGINEER
Chi Mark Chen
No. C 40582
Exp. 03/31/09
CIVIL
STATE OF CALIFORNIA

T.Y. LIN / MOFFATT & NICHOL
Two Harrison Street, Suite 300
San Francisco, CA 94105

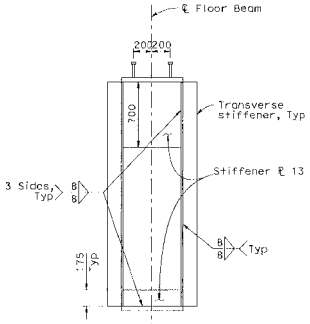

SECTION A-A
1:20

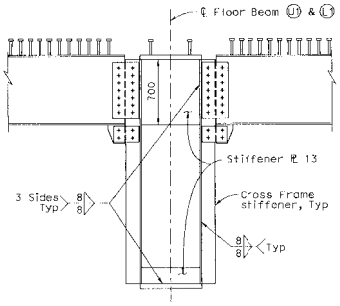

FLOOR BEAM U1, L1

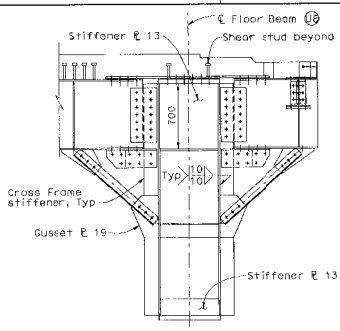

FLOOR BEAM U8

SECTION B-B
1:20

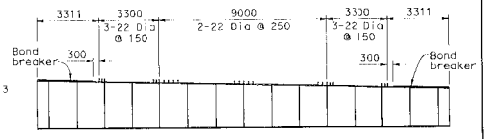

FLOOR BEAM SHEAR STUD SPACING DIAGRAM
No Scale

CONTRACT NO. 04-0120R4

CONTRACT CHANGE ORDER NO 140

SHEET 56 OF 84

Notes:

1. See "Floor Beam Details No. 1" for typical floor beam notes.
2. For stringer connection details, see "Stinger Details" sheets.
3. For floor beam connection to truss, see "Truss Joint Details" sheets.
4. For limits and spacing of floor beam shear studs and limits of bond breaker, see "Floor Beam Shear Stud Spacing Diagram".
5. Where weld contacts gusset plate or any connection plate, the surface of weld shall be ground smooth.
6. For man hole and hand hole details, see "Man Hole & Hand Hole Details" sheet.
7. Lateral bracing brackets not shown for clarity. For stiffener configuration required at lateral bracing bracket connections, see "Lateral Bracing Layout" & "Lateral Bracing Details" sheets.

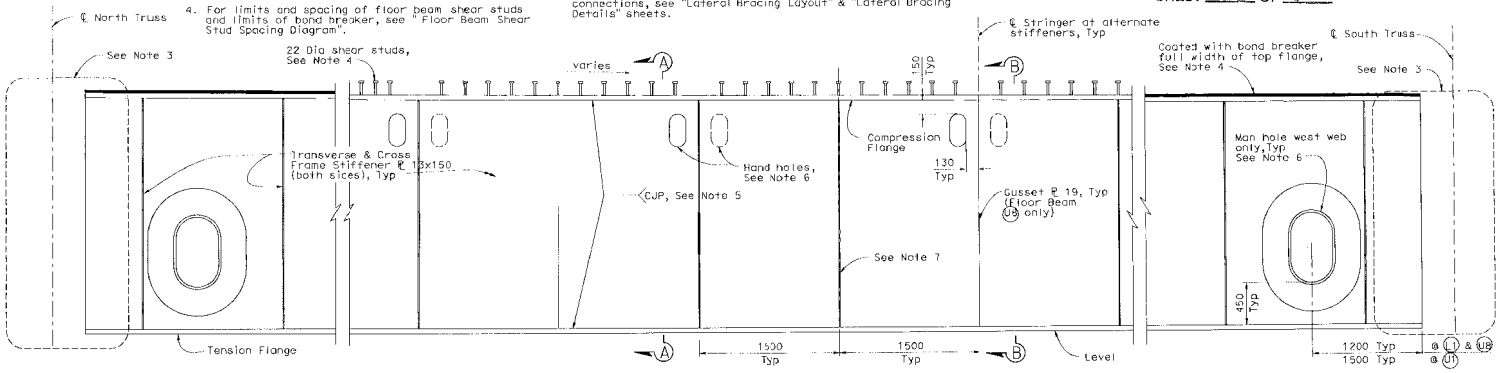

FLOOR BEAM U1, L1, U8 (Floor Beam U8 shown, U1 & L1 similar)
1:20

ALL DIMENSIONS ARE IN MILLIMETERS UNLESS OTHERWISE SHOWN

SAN FRANCISCO OAKLAND BAY BRIDGE
EAST SPAN SEISMIC SAFETY PROJECT

EAST TIE-IN

FLOOR BEAM DETAILS NO. 3

T. Ostrom/M. Whiteside/A. Akinsanya
DESIGN OVERSIGHT

SIGN OFF DATE

DESIGN DETAIL SHEET (METRIC) REV. 3/1/98
DATE TIME Pen Table File

	BY	CHECKED
DESIGN	M. Chen, K. Liu	S. Cheng, R. Najm, H. Nelson
DETAILS	S. Lee	M. Irwin, A. Lee
QUANTITIES	H. Nelson	A. Lee

ORIGINAL SCALE IN MILLIMETERS FOR REDUCED PLANS 0 10 20 30 40 50 60 70 80 90 100

PREPARED FOR THE
STATE OF CALIFORNIA
DEPARTMENT OF TRANSPORTATION

M. Sah
PROJECT ENGINEER
S. Abbas
PROJECT MANAGER

CU
EA 0120R4

BRIDGE NO. 34-0006 (TEMP)
KILOMETER POST 12.6

DISREGARD PRINTS BEARING EARLIER REVISION DATES

REVISION DATES (PRELIMINARY STAGE ONLY)

SHEET 60 OF 214

FILE =>p:\bb\04-0120R1\eti\dgn\dkfbd03.dgn

100% PS&E

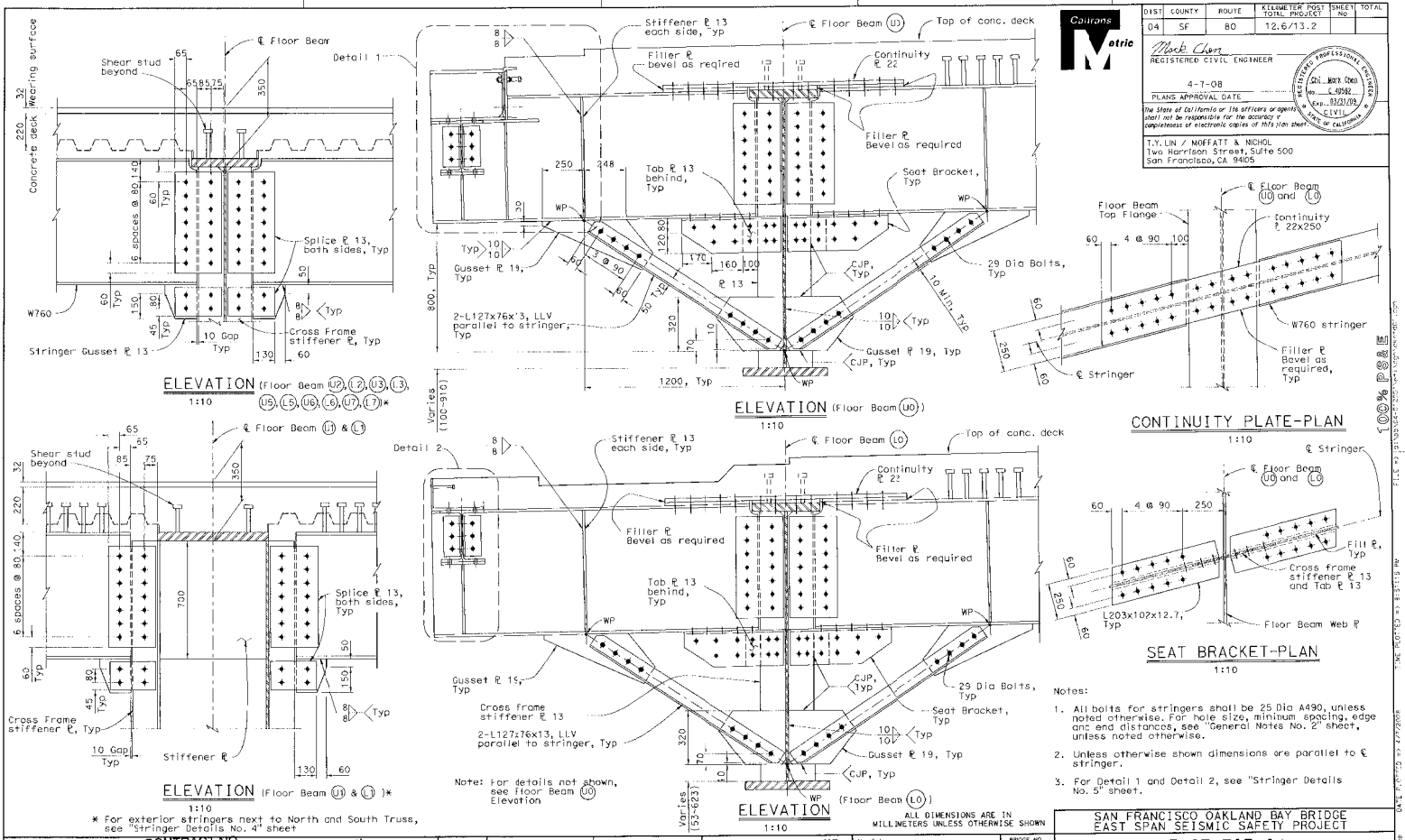

DIST	COUNTY	ROUTE	KILOMETER POST TOTAL PROJECT	SHEET NO	TOTAL
04	SF	80	12.6/13.2		

Caltrans Metric

Mark Chen
REGISTERED CIVIL ENGINEER

4-7-08
PLANS APPROVAL DATE

REGISTERED PROFESSIONAL ENGINEER Mark Chen No. C 49582 Exp. 03/31/09 CIVIL STATE OF CALIFORNIA

The State of California or its officers or agents shall not be responsible for the accuracy or completeness of electronic copies of this plan sheet.

T.Y. LIN / MOFFATT & NICHOL
Two Harrison Street, Suite 500
San Francisco, CA 94105

Notes:

1. All bolts for stringers shall be 25 Dia A490, unless noted otherwise. For hole size, minimum spacing, edge and end distances, see "General Notes No. 2" sheet, unless noted otherwise.
2. Unless otherwise shown dimensions are parallel to ℄ stringer.
3. For Detail 1 and Detail 2, see "Stringer Details No. 5" sheet.

ALL DIMENSIONS ARE IN MILLIMETERS UNLESS OTHERWISE SHOWN

SAN FRANCISCO OAKLAND BAY BRIDGE
EAST SPAN SEISMIC SAFETY PROJECT

EAST TIE-IN

STRINGER DETAILS NO. 1

T. Ostrom/M. Whiteside/A. Akinci	DESIGN	M. Chen, K. Liu	CHECKED S. Cheng, N. Wajn, H. Nelson
DESIGN OVERSIGHT	DETAILS	S. Lee	CHECKED M. Irwin, A. Lee
SIGN OFF DATE	QUANTITIES	H. Nelson	CHECKED A. Lee

PREPARED FOR THE STATE OF CALIFORNIA
DEPARTMENT OF TRANSPORTATION

M. Sah	PROJECT ENGINEER
S. Abbas	PROJECT MANAGER
CU	
E.A 012084	

BRIDGE NO. 34-0006
LT&ME
KILOMETER POST 12.6

CONTRACT NO. 04-0120R4
CONTRACT CHANGE ORDER NO. 146
SHEET 57 OF 84

DESIGN DETAIL SHEET (METRIC) (REV. 3/1/99)
ROUTE# MTIME# Pen Table File

ORIGINAL SCALE IN MILLIMETERS FOR REDUCED PLANS 0 10 20 30 40 50 60 70 80 90 100

DISREGARD PRINTS BEARING EARLIER REVISION DATES → 5/08 4/08

REVISION DATES (PRELIMINARY STAGE ONLY)

SHEET 61 OF 214

FILE -> p:\ba\04-012001\et\kdgn\oakstd01.dgn

USERNAME => kdgn

DATE PLOTTED => 4/7/2008

TIME PLOTTED => 11:51:18 AM

100% PS&E

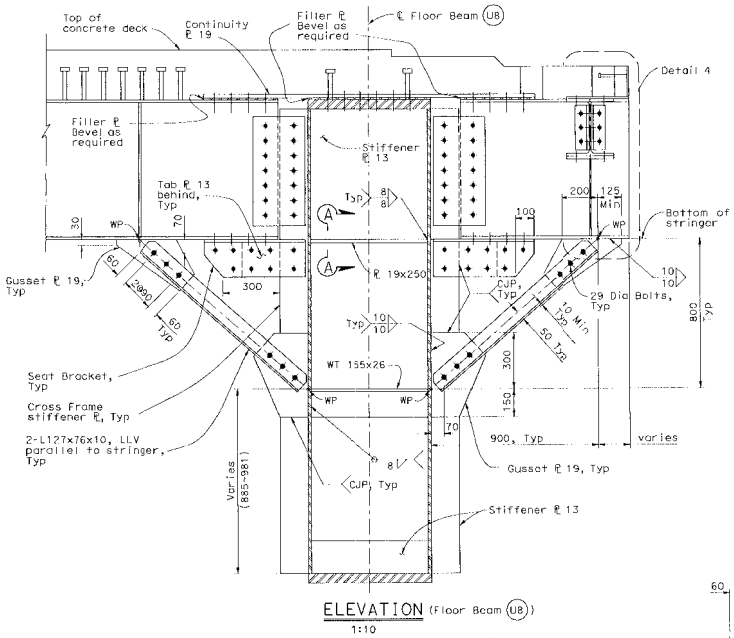

ELEVATION (Floor Beam (U8))
1:10

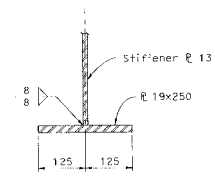

SECTION A-A
1:5

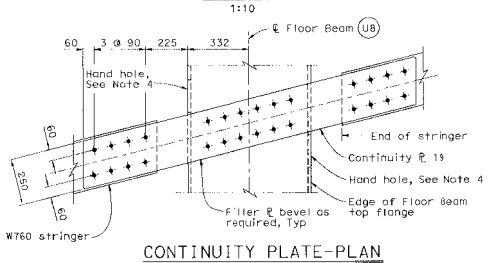

CONTINUITY PLATE-PLAN
1:10

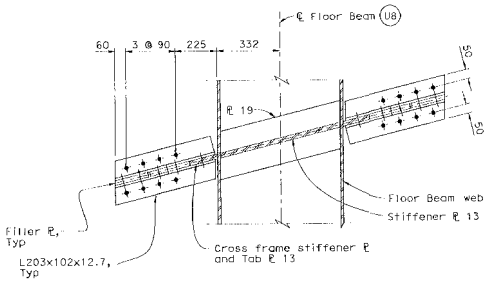

SEAT BRACKET-PLAN
1:10

Caltrans Metric

DIST	COUNTY	ROUTE	KILOMETER POST TOTAL PROJECT	SHEET No.	TOTAL
04	SF	80	12.6/13.2		

Mark Chen
REGISTERED CIVIL ENGINEER
4-7-08
PLANS APPROVAL DATE

REGISTERED PROFESSIONAL ENGINEER
Chi Mark Chen
No. C 40582
Exp. 03/31/09
CIVIL
STATE OF CALIFORNIA

The State of California or its officers or agents shall not be responsible for the accuracy or completeness of electronic copies of this plan sheet.

T.Y. LIN / MOFFATT & NICHOL
Two Harrison Street, Suite 500
San Francisco, CA 94105

CONTRACT NO. 04-0120R4

CONTRACT CHANGE ORDER NO 14-0

SHEET 58 OF 84

Notes:

1. All bolts for stringers shall be 25 Dia A490, unless noted otherwise. For hole size, minimum spacing, edge and end distances, see "General Notes No. 2" sheet, unless noted otherwise.
2. Unless otherwise shown dimensions are parallel to ℄ stringer.
3. For Detail 4, see "Stringer Details No. 6" sheet.
4. For hand hole details, see "Man Hole & Hand Hole Details" sheet.

ALL DIMENSIONS ARE IN MILLIMETERS UNLESS OTHERWISE SHOWN

SAN FRANCISCO OAKLAND BAY BRIDGE
EAST SPAN SEISMIC SAFETY PROJECT

EAST TIE-IN

STRINGER DETAILS NO. 2

T. Dstrom/M. Whiteside/A. Akinsanya
DESIGN OVERSIGHT
SIGN OFF DATE

DESIGN DETAIL SHEET (METRIC) REV. 3/1/98
•DATE• •TIME• Pen Table File

DESIGN	BY M. Chen, K. Liu	CHECKED S. Cheng, H. Najm, H. Nelson
DETAILS	BY S. Lee	CHECKED M. Irwin, A. Lee
QUANTITIES	BY H. Nelson	CHECKED A. Lee

ORIGINAL SCALE IN MILLIMETERS FOR REDUCED PLANS 0 10 20 30 40 50 60 70 80 90 100

PREPARED FOR THE STATE OF CALIFORNIA DEPARTMENT OF TRANSPORTATION

M. Soh
PROJECT ENGINEER
S. Abbas
PROJECT MANAGER

BRIDGE NO. 34-0006 (TEMP)
KILOMETER POST 12.6

CU
EA 0120F4

DISREGARD PRINTS BEARING EARLIER REVISION DATES

REVISION DATES (PRELIMINARY STAGE ONLY) 11/1/97 4/7/08

SHEET 62 OF 214

FILE => p:\bb\04-012001\et\dgn\ukstd02.dgn

100% PS&E

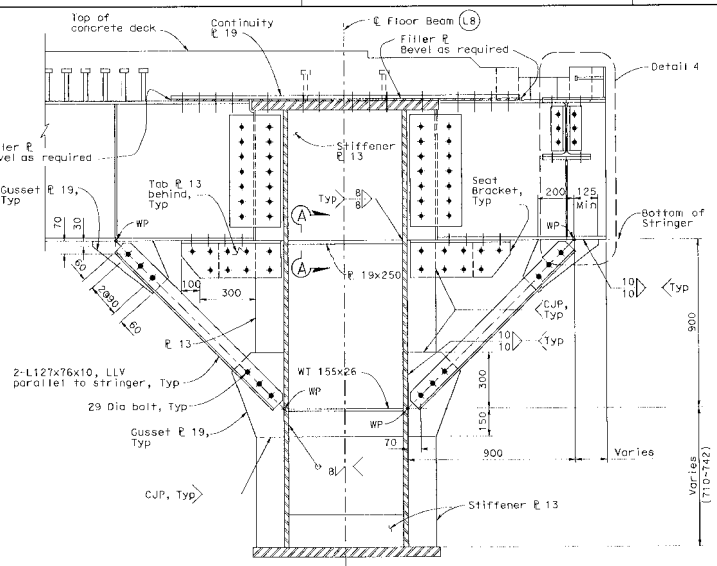

ELEVATION (Floor Beam (L8))
1:10

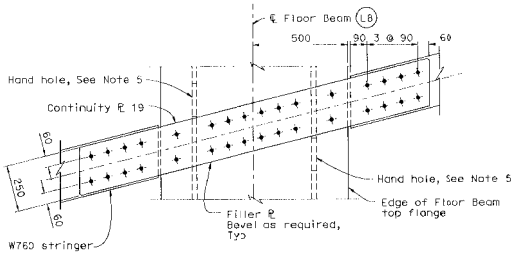

CONTINUITY PLATE-PLAN
1:10

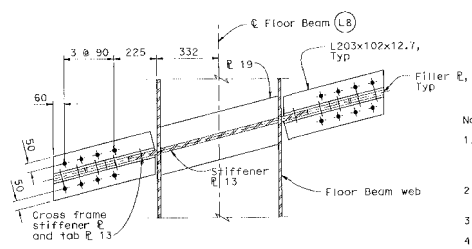

SEAT BRACKET-PLAN
1:10

DIST	COUNTY	ROUTE	KILOMETER POST TOTAL PROJECT	SHEET No.	TOTAL
04	SF	80	12.6/13.2		

Mark Chen
REGISTERED CIVIL ENGINEER

4-7-08
PLANS APPROVAL DATE

REGISTERED PROFESSIONAL ENGINEER
Chi Mark Chen
No. C 40582
Exp. 03/31/09
CIVIL
STATE OF CALIFORNIA

The State of California or its officers or agents shall not be responsible for the accuracy or completeness of electronic copies of this plan sheet.

T.Y. LIN / MOFFATT & NICHOL
Two Harrison Street, Suite 500
San Francisco, CA 94105

CONTRACT NO. 04-0120R4

CONTRACT CHANGE ORDER NO 140

SHEET 59 OF 84

Notes:

1. All bolts for stringers shall be 25 Dia A490, unless noted otherwise. For hole size, minimum spacing, edge and end distances, see "General Notes No. 2" sheet, unless noted otherwise.
2. Unless otherwise shown dimensions are parallel to ℄ stringer.
3. For Detail 4, see "Stringer Details No. 6" sheet.
4. For Section A-A, see "Stringer Details No. 2" sheet.
5. For hand hole details, see "Man Hole & Hand Hole Details" sheet.

ALL DIMENSIONS ARE IN MILLIMETERS UNLESS OTHERWISE SHOWN

SAN FRANCISCO OAKLAND BAY BRIDGE
EAST SPAN SEISMIC SAFETY PROJECT

EAST TIE-IN

STRINGER DETAILS NO. 3

T. Ostrom/M. Whiteside/A. Akinsanya
DESIGN OVERSIGHT

SIGN OFF DATE

DESIGN DETAIL SHEET (METRIC) REV. 3/1/99
DATE ● TIME ● Pen Table File

	BY	CHECKED
DESIGN	M. Chen, K. Liu	S. Cheng, H. Maja, H. Nelson
DETAILS	S. Lee	M. Irwin, A. Lee
QUANTITIES	H. Nelson	A. Lee

ORIGINAL SCALE IN MILLIMETERS FOR REDUCED PLANS 0 10 20 30 40 50 60 70 80 90 100

PREPARED FOR THE STATE OF CALIFORNIA DEPARTMENT OF TRANSPORTATION

M. Soh
PROJECT ENGINEER
S. Abbas
PROJECT MANAGER

BRIDGE NO. 34-0006 (TEMP)
KILOMETER POST 12.6

CU
EA 0120R4

DISREGARD PRINTS BEARING EARLIER REVISION DATES

REVISION DATES (PRELIMINARY STAGE ONLY)
11/26/07 4/1/08

SHEET 63 OF 214

FILE =>p:\bb\04-012001\eti\dgn\aks1a03.dgn

100% PS&E

FILE =>p:\bb\04-012001\eti\dgn\aks1a03.dgn TIME PLOTTED => 8:51:21 PM DATE PLOTTED => 4/7/2008 USERNAME => ALEE

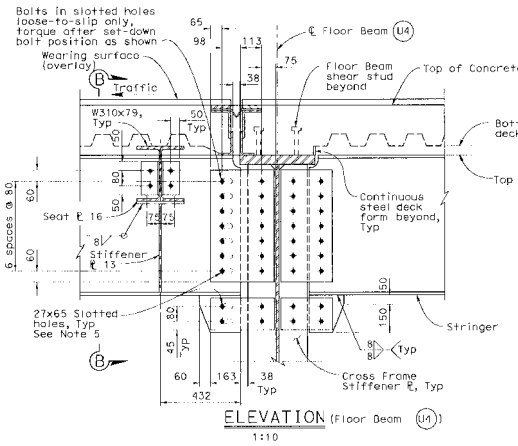

ELEVATION (Floor Beam (L4))

1:10

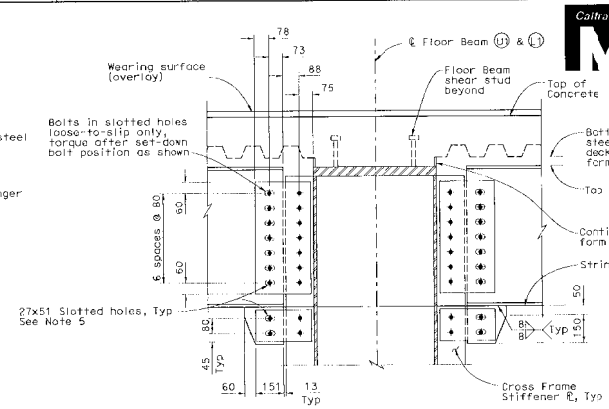

ELEVATION (Floor Beam (U1) & (L1))

1:10

For exterior stringers next to North and South Truss only

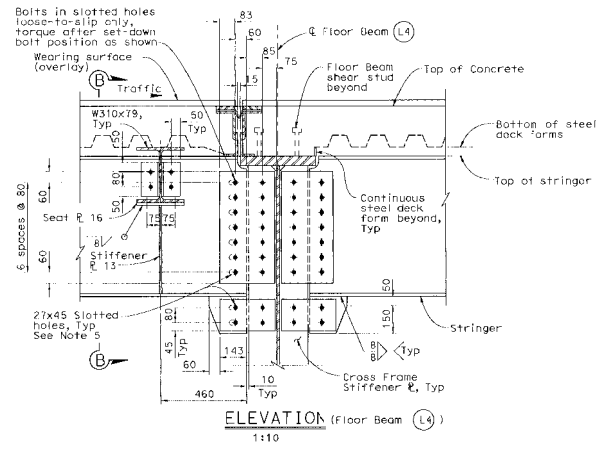

ELEVATION (Floor Beam (L4))

1:10

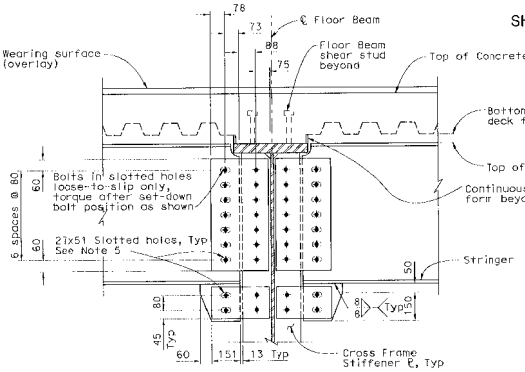

ELEVATION (Floor Beam (U2), (L2), (U3), (L3), (U5), (L5), (U6), (L6), (U7), (L7))

1:10

For exterior stringers next to North and South Truss only

ALL DIMENSIONS ARE IN MILLIMETERS UNLESS OTHERWISE SHOWN

CONTRACT NO. 04-0120R4

CONTRACT CHANGE ORDER NO. 140

SHEET 60 OF 84

Notes:

1. All bolts for stringers shall be 25 Dia A490, unless noted otherwise. For hole size, minimum spacing, edge and end distances, see "General Notes No. 2" sheet, unless noted otherwise.
2. Unless otherwise shown dimensions are parallel to ℄ stringer.
3. For joint seal assembly details, see "Joint Seal Assembly" sheet.
4. For Section B-B, see "Stringer Details No. 6" sheet.
5. Provide structural grade plate washers (10 mm thick) and hardened washers.

DIST	COUNTY	ROUTE	KILOMETER POST TOTAL PROJECT	SHEET No.	TOTAL
04	SF	80	12.6/13.2		

Mark Chan
REGISTERED CIVIL ENGINEER

4-7-08
PLANS APPROVAL DATE

The State of California or its officers or agents shall not be responsible for the accuracy or completeness of electronic copies of this plan sheet.

REGISTERED PROFESSIONAL ENGINEER — Mark Chan — No. C 40582 — Exp. 03/31/09 — CIVIL — STATE OF CALIFORNIA

T.Y. LIN / MOFFATT & NICHOL
Two Harrison Street, Suite 500
San Francisco, CA 94105

T. Ostrom/M. Whiteside/A. Akinsanya
DESIGN OVERSIGHT

SIGN OFF DATE

	BY	CHECKED
DESIGN	W. Chen, K. Liu	S. Cheng, H. Naja, R. Nelson
DETAILS	S. Lee	N. Irwin, A. Lee
QUANTITIES	H. Nelson	A. Lee

PREPARED FOR THE STATE OF CALIFORNIA
DEPARTMENT OF TRANSPORTATION

N. Soh — PROJECT ENGINEER
S. Abbas — PROJECT MANAGER

BRIDGE NO. 34-0006
LIENEF
KILOMETER POST 12.6

SAN FRANCISCO OAKLAND BAY BRIDGE
EAST SPAN SEISMIC SAFETY PROJECT

EAST TIE-IN

STRINGER DETAILS NO. 4

DESIGN DETAIL SHEET (METRIC) REV. 3/5/98
DATE
TIME
Pen Table File

ORIGINAL SCALE IN MILLIMETERS FOR REDUCED PLANS
0 10 20 30 40 50 60 70 80 90 100

CU 0120R1
EA

FILE => p:\bb\04-012001\et1\dgn\oks#104.dgn

DISREGARD PRINTS BEARING EARLIER REVISION DATES

REVISION DATES (PRELIMINARY STAGE ONLY)

1/08										

SHEET	OF
64	214

PLOT DATE => 4/7/2008
PLOTTED => 8:51:53 AM
USERNAME => ALEE

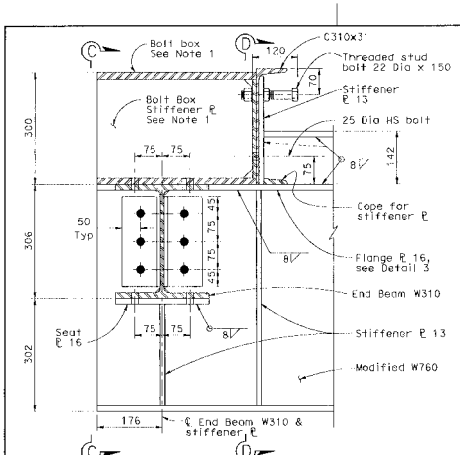

DETAIL 1 (Expansion Joint not shown for clarity)

1:5

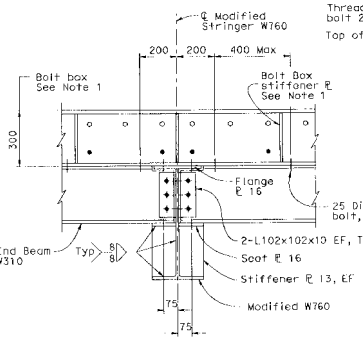

SECTION C-C

1:10

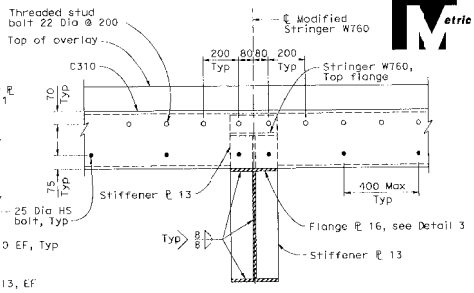

SECTION D-D

1:10

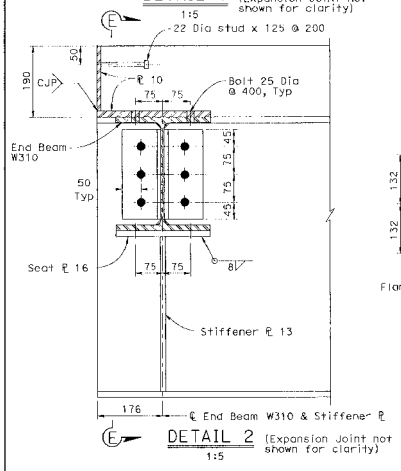

DETAIL 2 (Expansion Joint not shown for clarity)

1:5

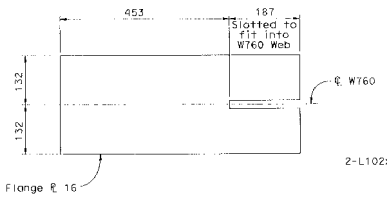

DETAIL 3

1:5

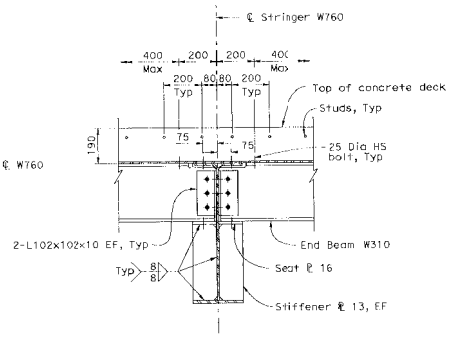

SECTION E-E

1:10

(Expansion Joint not shown for clarity)

DIST	COUNTY	ROUTE	KILOMETER POST TOTAL PROJECT	SHEET NO	TOTAL
04	SF	80	12.6/13.2		

Mark Chen
REGISTERED CIVIL ENGINEER

4-7-08
PLANS APPROVAL DATE

Mark Chen
No. C 40582
Exp. 03/31/09
CIVIL
STATE OF CALIFORNIA

The State of California or its officers or agents shall not be responsible for the accuracy or completeness of electronic copies of this plan sheet.

T.Y. LIN / MOFFATT & NICHOL
Two Harrison Street, Suite 500
San Francisco, CA 94105

CONTRACT NO. 04-0120R4

CONTRACT CHANGE ORDER NO. 140

SHEET 61 OF 84

Notes:

1. For details and dimensions not shown, see "Bent 52A Expansion Joint Details" sheets.
2. All bolts for end beams shall be 25 Dia A325 in standard holes, unless noted otherwise.

ALL DIMENSIONS ARE IN MILLIMETERS UNLESS OTHERWISE SHOWN

SAN FRANCISCO OAKLAND BAY BRIDGE
EAST SPAN SEISMIC SAFETY PROJECT

EAST TIE-IN

STRINGER DETAILS NO. 5

T. Ostrom/M. Whiteside/A. Akinsanya	DESIGN	BY W. Chen, K. Liu	CHECKED S. Cheng, H. Najm, H. Nelson
DESIGN OVERSIGHT	DETAILS	BY S. Lee	CHECKED N. Irwin, A. Lee
SIGN OFF DATE	QUANTITIES	BY H. Nelson	CHECKED A. Lee

PREPARED FOR THE STATE OF CALIFORNIA
DEPARTMENT OF TRANSPORTATION

M. Soh — PROJECT ENGINEER
S. Abbas — PROJECT MANAGER

BRIDGE NO. 34-0006 (TEMP.)
KILOMETER POST 12.6

CU
EA 0120R4

DESIGN DETAIL SHEET (METRIC) (REV. 3/1/98)
DATE ● TIME ● Pen Table File

ORIGINAL SCALE IN MILLIMETERS
FOR REDUCED PLANS 0 10 20 30 40 50 70 80 90 100

DISREGARD PRINTS DEARING EARLIER REVISION DATES

REVISION DATES (ENGINEERING STAFF ONLY)

SHEET 65 OF 214

FILE = s:\pr\bb\04-0120R4\all\dgn\bkstd05.dgn

DATE PLOTTED => 4/7/2008 8:15:27 AM
FILE => s:\pr\bb\04-0120R4\all\dgn\bkstd05.dgn
100% PLAN
LEVELS => ALL

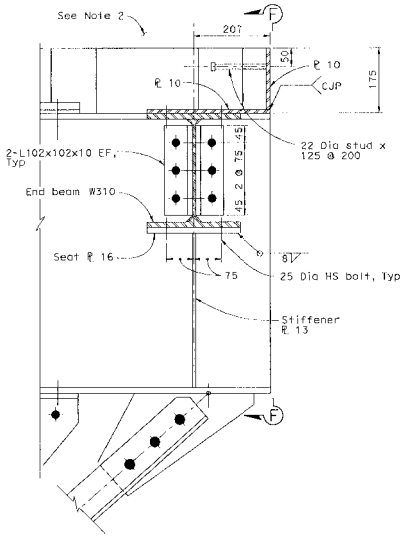

DETAIL 4

1:5

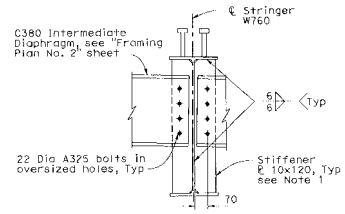

INTERMEDIATE DIAPHRAGM CONNECTION

1:10

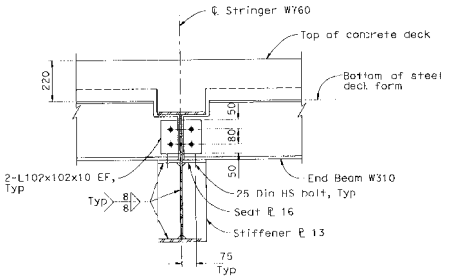

SECTION B-B

1:10

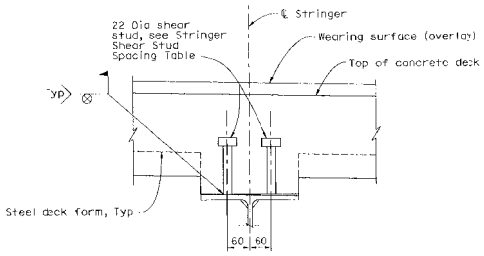

SHEAR STUD DETAIL

1:5

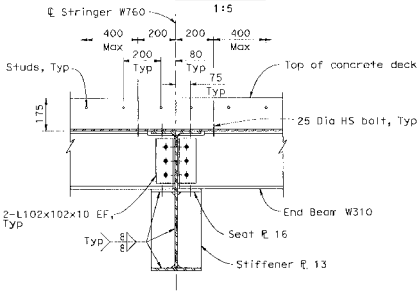

SECTION F-F

1:10

STRINGER SHEAR STUD SPACING TABLE*

0-0.25 L	0.25 L-0.75 L	0.75 L-1.0 L
@ 100 interval	@ 150 interval	@ 100 interval

L=Span Length of Stringer between ℄ Floor Beams.

* Except in, the proximity of floor beams. See Section A-A in "Concrete Deck Details No.1" sheet

Notes:

1. Stringer stiffeners at intermediate diaphragm connections only.
2. For details not shown, see "Pier E1 Expansion Joint Details" sheets.
3. All bolts for end beams shall be 25 Dia A325 in standard holes, unless noted otherwise.

DIST	COUNTY	ROUTE	KILOMETER POST TOTAL PROJECT	SHEET No	TOTAL
04	SF	80	12 6/13.2		

Mark Chen
REGISTERED CIVIL ENGINEER

4-7-08
PLANS APPROVAL DATE

REGISTERED PROFESSIONAL ENGINEER
Chi Mark Chen
No. C 40582
Exp. 03/31/08
CIVIL
STATE OF CALIFORNIA

The State of California or its officers or agents shall not be responsible for the accuracy or completeness of electronic copies of this plan sheet.

T.Y. LIN / MOFFATT & NICHOL
Two Harrison Street, Suite 300
San Francisco, CA 94105

100% PS&E

CONTRACT NO. 04-0120R4

CONTRACT CHANGE ORDER NO 140

SHEET 62 OF 84

ALL DIMENSIONS ARE IN MILLIMETERS UNLESS OTHERWISE SHOWN

SAN FRANCISCO OAKLAND BAY BRIDGE
EAST SPAN SEISMIC SAFETY PROJECT

EAST TIE-IN

STRINGER DETAILS NO. 6

T. Ostrom/M. Whiteside/A. Akinsanya
DESIGN OVERSIGHT

SIGN OFF DATE

DESIGN DETAIL SHEET (METRIC) REV. 3/7/08
#DATE# #TIME# Pen Table File

DESIGN	BY M. Chen, K. Liu	CHECKED S. Cheng, H. Wajm, H. Nelson
DETAILS	BY S. Lee	CHECKED M. Irwin, A. Lee
QUANTITIES	BY H. Nelson	CHECKED A. Lee

PREPARED FOR THE STATE OF CALIFORNIA DEPARTMENT OF TRANSPORTATION

M. Sah
PROJECT ENGINEER
S. Abbas
PROJECT MANAGER

BRIDGE NO. 34-0006 (TEMP)
KILOMETER POST 12.6

CU
EA 012081

ORIGINAL SCALE IN MILLIMETERS FOR REDUCED PLANS 0 10 20 30 40 50 60 70 80 90 100

DISREGARD PRINTS BEARING EARLIER REVISION DATES

REVISION DATES (PRELIMINARY STAGE ONLY) 11/8/07 4/7/08

SHEET 66 OF 214

FILE -> p:\bb\04-012001\eti\dgn\dkstd06.dgn

USERNAME => ALeE DATE PLOTTED => 4/7/2008 TIME PLOTTED => 8:51:29 PM FILE => p:\bb\04-012001\eti\dgn\dkstd06.dgn

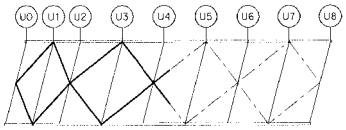

KEY PLAN-UPPER DECK

No Scale

Notes:

1. For Detail 1, Detail 2 and Detail 3, see "Lateral Bracing Details No. 1" sheet.
2. For Detail 5, see "Lateral Bracing Details No. 2" sheet.
3. All lateral bracing is designed as tension only members.

Caltrans Metric

DIST	COUNTY	ROUTE	KILOMETER POST TOTAL PROJECT	SHEET No.	TOTAL
04	SF	80	12.6/13.2		

REGISTERED CIVIL ENGINEER

4-7-08

PLANS APPROVAL DATE

REGISTERED PROFESSIONAL ENGINEER David Griffith No. C49125 Exp. 9/30/08 CIVIL STATE OF CALIFORNIA

The State of California or its officers or agents shall not be responsible for the accuracy or completeness of electronic copies of this plan sheet.

T.Y. LIN / MOFFATT & NICHOL
Two Harrison Street, Suite 100
San Francisco, CA 94105

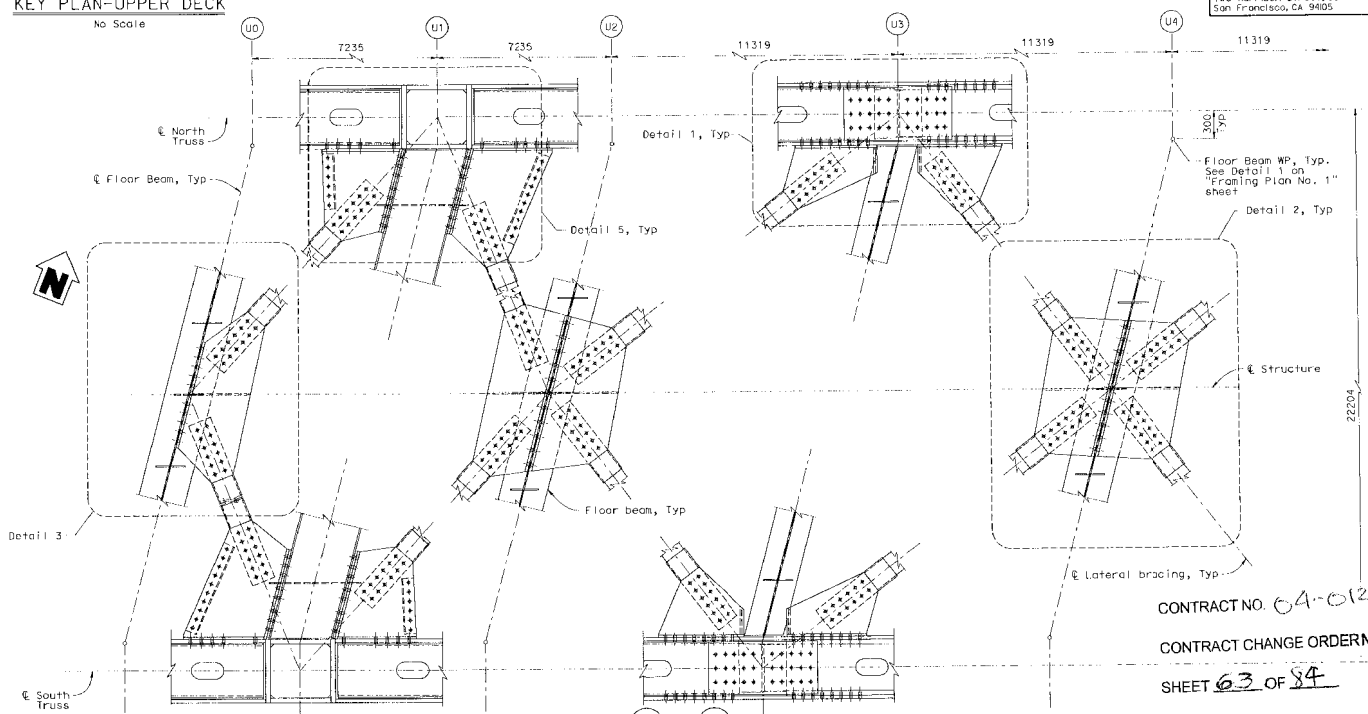

UPPER LATERAL BRACING PLAN U0 TO U4

1:20

CONTRACT NO. 04-0126R4

CONTRACT CHANGE ORDER NO 140

SHEET 63 OF 84

ALL DIMENSIONS ARE IN MILLIMETERS UNLESS OTHERWISE SHOWN

SAN FRANCISCO OAKLAND BAY BRIDGE
EAST SPAN SEISMIC SAFETY PROJECT

EAST TIE-IN

UPPER LATERAL BRACING LAYOUT NO. 1

T. Ostrom/M. Whiteside/A. Akirsanya
DESIGN OVERSIGHT

SIGN OFF DATE

DESIGN DETAIL SHEET (METRIC) REV. 3/V/08
DATE TIME Pen Table File

DESIGN	BY D. Griffith, S. Singh	CHECKED S. Cheng, H. Najm	
DETAILS	BY P. Zhao	CHECKED M. Irwin, A. Lee	
QUANTITIES	BY H. Nelson	CHECKED A. Lee	

ORIGINAL SCALE IN MILLIMETERS FOR REDUCED PLANS 0 10 20 30 40 50 60 70 80 90 100

PREPARED FOR THE STATE OF CALIFORNIA DEPARTMENT OF TRANSPORTATION

M. Sah
PROJECT ENGINEER
S. Abbas
PROJECT MANAGER

BRIDGE NO. 34-0006 (TEMP)
KILOMETER POST 12.6

CU
EA 0120R1

DISREGARD PRINTS BEARING EARLIER REVISION DATES

REVISION DATES (PRELIMINARY STAGE ONLY)

SHEET 67 OF 214

FILE =>p:\bb\04-012001\eli\dgn\ckulbl01.dgn

100% PS&E

DATE PLOTTED => 4/7/2008 TIME PLOTTED => 8:31:32 PM FILE => p:\bb\04-012001\eli\dgn\ckulbl01.dgn

USERNAME => A.Lee

Note:

1. For Detail 1, Detail 2 and Detail 4, see "Lateral Bracing Details No. 1" sheet.

DIST	COUNTY	ROUTE	KILOMETER POST TOTAL PROJECT	SHEET No	TOTAL
04	SF	80	12.6/13.2		

REGISTERED CIVIL ENGINEER

4-7-08

PLANS APPROVAL DATE

The State of California or its officers or agents shall not be responsible for the accuracy or completeness of electronic copies of this plan sheet.

REGISTERED PROFESSIONAL ENGINEER
David Griffith
No. C49125
Exp. 9/30/08
CIVIL
STATE OF CALIFORNIA

T.Y.LIN / MOFFATT & NICHOL
Two Harrison Street, Suite 500
San Francisco, CA 94105

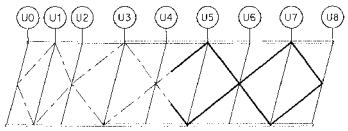

KEY PLAN-UPPER DECK

No Scale

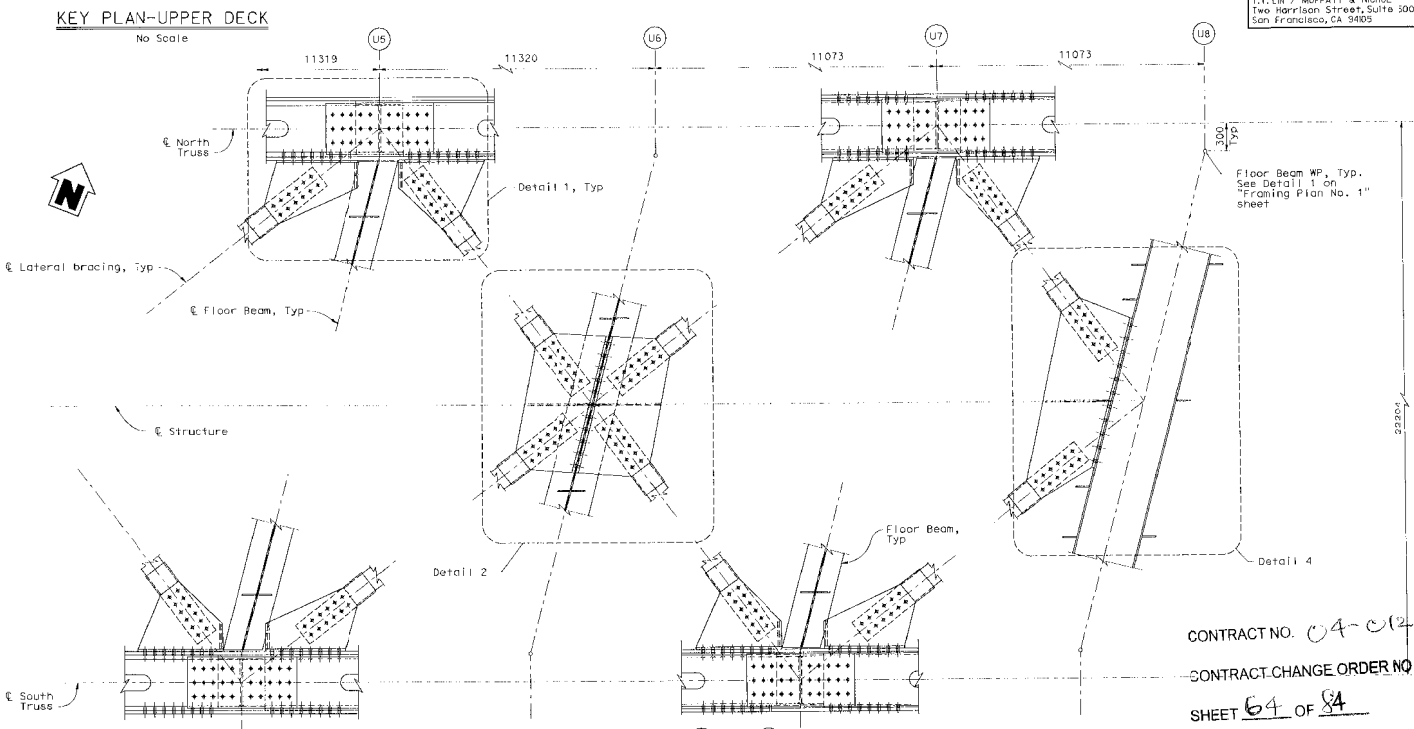

UPPER LATERAL BRACING PLAN U5 TO U8

1:20

CONTRACT NO. 04-0120R4

CONTRACT CHANGE ORDER NO 140

SHEET 64 OF 84

ALL DIMENSIONS ARE IN MILLIMETERS UNLESS OTHERWISE SHOWN

SAN FRANCISCO OAKLAND BAY BRIDGE
EAST SPAN SEISMIC SAFETY PROJECT

EAST TIE-IN

UPPER LATERAL BRACING LAYOUT NO. 2

T. Ostrom/M. Whiteside/A. Akinsanya
DESIGN OVERSIGHT

SIGN OFF DATE

DESIGN DETAIL SHEET (METRIC) REV. 3/1/98
\$DATE\$ \$TIME\$ Pen Table File

DESIGN	BY D. Griffith, S. Singh	CHECKED S. Cheng, H. Najm	
DETAILS	BY P. Zhao	CHECKED M. Irwin, A. Lee	
QUANTITIES	BY H. Nelson	CHECKED A. Lee	

PREPARED FOR THE STATE OF CALIFORNIA DEPARTMENT OF TRANSPORTATION

M. Sah
PROJECT ENGINEER
S. Abbas
PROJECT MANAGER

BRIDGE NO. 34-0006 (TEMP)
KILOMETER POST 12.6

CU
EA 0120R4

ORIGINAL SCALE IN MILLIMETERS FOR REDUCED PLANS 0 10 20 30 40 50 60 70 80 90 100

DISREGARD PRINTS BEARING EARLIER REVISION DATE

REVISION DATES (PRELIMINARY STAGE ONLY)

SHEET 68 OF 214

FILE => p:\bb\04-012001\eti\dgn\akulb102.dgn

100% PS&E

FILE => p:\bb\04-012001\eti\dgn\akulb102.dgn

TIME PLOTTED => 8:51:34 PM

DATE PLOTTED => 4/7/2008

USERNAME => A.Lee

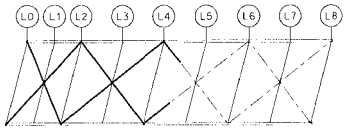

KEY PLAN-LOWER DECK

No Scale

Notes:

1. For Detail 6, Detail 7 and Detail 8, see "Lateral Bracing Details No. 2" sheet.
2. For Detail 9, see "Lateral Bracing Details No. 3" sheet.
3. All lateral bracing is designed as tension only members.

Caltrans Metric

DIST	COUNTY	ROUTE	KILOMETER POST TOTAL PROJECT	SHEET NO.	TOTAL
04	SF	80	12.6/13.2		

REGISTERED CIVIL ENGINEER

4-7-08

PLANS APPROVAL DATE

REGISTERED PROFESSIONAL ENGINEER David Griffith No. C49125 Exp. 9/30/08 CIVIL STATE OF CALIFORNIA

The State of California or its officers or agents shall not be responsible for the accuracy or completeness of electronic copies of this plan sheet.

T.Y. LIN / MOFFATT & NICHOL
Two Harrison Street, Suite 500
San Francisco, CA 94105

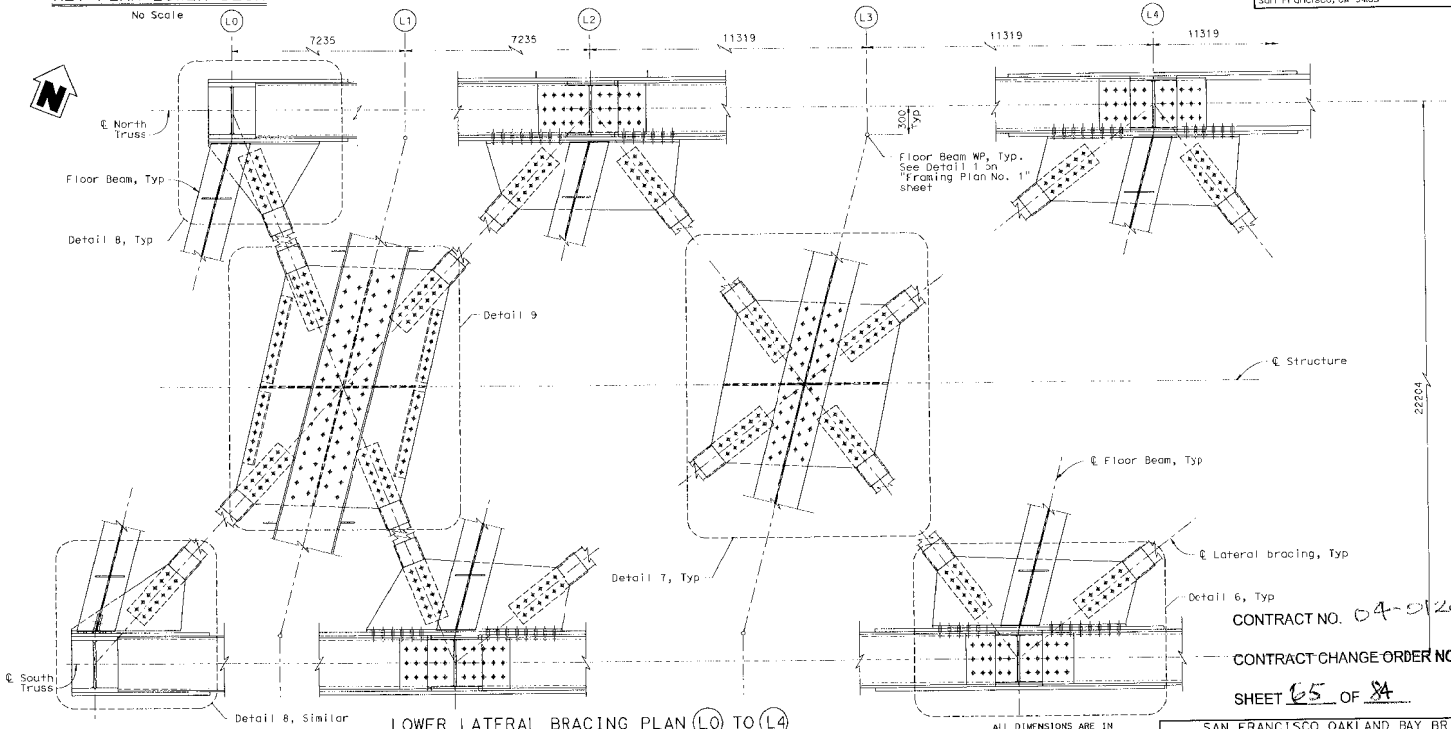

LOWER LATERAL BRACING PLAN (L0) TO (L4)

1:20

ALL DIMENSIONS ARE IN MILLIMETERS UNLESS OTHERWISE SHOWN

CONTRACT NO. 04-0120R4

CONTRACT CHANGE ORDER NO 140

SHEET 65 OF 84

SAN FRANCISCO OAKLAND BAY BRIDGE
EAST SPAN SEISMIC SAFETY PROJECT

EAST TIE-IN

LOWER LATERAL BRACING LAYOUT NO. 1

T. Ostrom/M. Whitesides/A. Akinsanya	DESIGN	BY D. Griffith, S. Singh	CHECKED S. Cheng, H. Nojm
DESIGN OVERSIGHT	DETAILS	BY P. Zhao	CHECKED M. Irwin, A. Lee
SIGN OFF DATE	QUANTITIES	BY H. Nelson	CHECKED A. Lee

PREPARED FOR THE STATE OF CALIFORNIA DEPARTMENT OF TRANSPORTATION

M. Soh — PROJECT ENGINEER
S. Abbas — PROJECT MANAGER

BRIDGE NO. 34-0006 (TEMP)
KILOMETER POST 12.6

DESIGN DETAIL SHEET (METRIC) REV. 3/1/99 #DATE# #TIME# Pen Table File

ORIGINAL SCALE IN MILLIMETERS FOR REDUCED PLANS 0 10 20 30 40 50 60 70 80 90 100

CU EA 012086

DISREGARD PRINTS BEARING EARLIER REVISION DATES →

REVISION DATES (PRELIMINARY STAGE ONLY)

SHEET 69 OF 214

F:\[F:\pjts\bb\04-012001\ett\dgn\dkltlb01.dgn

DATE PLOTTED => 8-5-136 PM

USERNAME => XLEW

100% PSEE

Notes:

1. For Detail 6 and Detail 7, see "Lateral Bracing Details No. 2" sheet.
2. For Detail 10, see "Lateral Bracing Details No. 3" sheet.

DIST	COUNTY	ROUTE	KILOMETER POST TOTAL PROJECT	SHEET NO	TOTAL
04	SF	80	12.6/13.2		

REGISTERED CIVIL ENGINEER

4-7-08

PLANS APPROVAL DATE

The State of California or its officers or agents shall not be responsible for the accuracy or completeness of electronic copies of this plan sheet.

REGISTERED PROFESSIONAL ENGINEER David Griffith No. C49125 Exp. 9/30/08 CIVIL STATE OF CALIFORNIA

T.Y. LIN / MOFFATT & NICHOL
Two Harrison Street, Suite 500
San Francisco, CA 94105

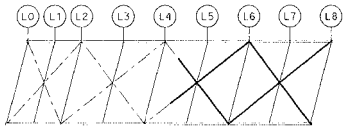

KEY PLAN-LOWER DECK

No Scale

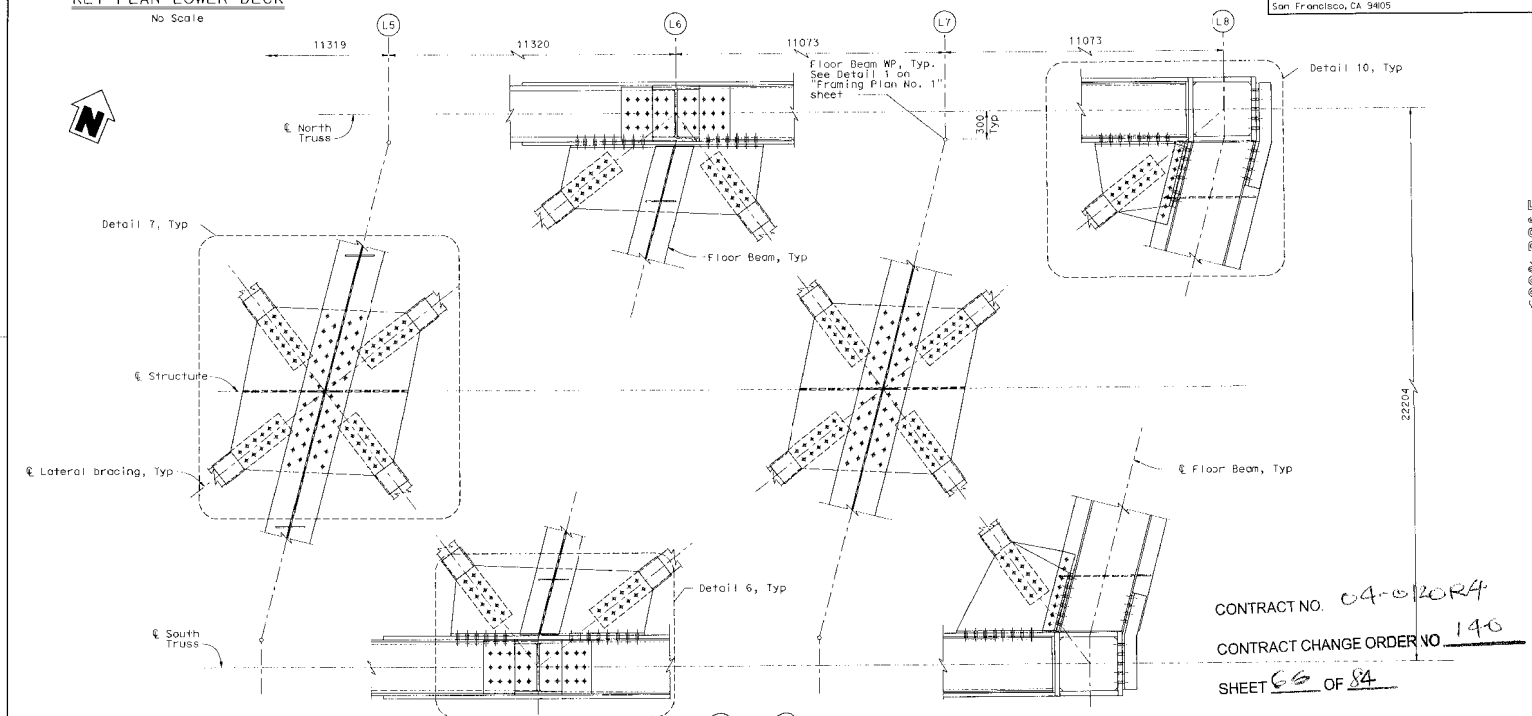

LOWER LATERAL BRACING PLAN (L5) TO (L8)

1:20

CONTRACT NO. 04-0120R4

CONTRACT CHANGE ORDER NO. 140

SHEET 66 OF 84

ALL DIMENSIONS ARE IN MILLIMETERS UNLESS OTHERWISE SHOWN

SAN FRANCISCO OAKLAND BAY BRIDGE
EAST SPAN SEISMIC SAFETY PROJECT

EAST TIE-IN

LOWER LATERAL BRACING LAYOUT NO. 2

T. Ostrom/M. Whiteside/A. Akinsanya
DESIGN OVERSIGHT

SIGN OFF DATE

DESIGN DETAIL SHEET (METRIC) (REV. 3/1/98)
●DATE● ●TIME● Pen Table File

DESIGN	BY D. Griffith, S. Singh	CHECKED S. Cheng, H. Najm	
DETAILS	BY P. Zhao	CHECKED M. Irwin, A. Lee	
QUANTITIES	BY H. Nelson	CHECKED A. Lee	

PREPARED FOR THE STATE OF CALIFORNIA DEPARTMENT OF TRANSPORTATION

M. Soh
PROJECT ENGINEER
S. Abbas
PROJECT MANAGER

BRIDGE NO. 34-0006 (TEMP)
KILOMETER POST 12.6

CU
EA 0120R4

ORIGINAL SCALE IN MILLIMETERS FOR REDUCED PLANS 0 10 20 30 40 50 60 70 80 90 100

DISREGARD PRINTS BEARING EARLIER REVISION DATES

REVISION DATES (PRELIMINARY STAGE ONLY) 11/5/07 4/1/08

SHEET 70 OF 214

FILE => f:\bb\04-012001\eti\dgn\aklib102.dgn

100% PS&E

USERNAME => ALEW DATE PLOTTED => 4/7/2008 TIME PLOTTED => 8:51:37 PM FILE => jgi\04-012001\eti\dgn\aklib102.dgn

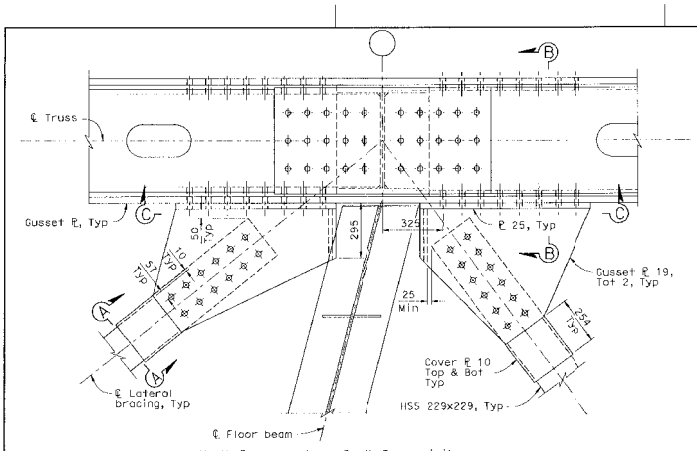

North Truss as shown, South Truss similar

DETAIL 1
1:10

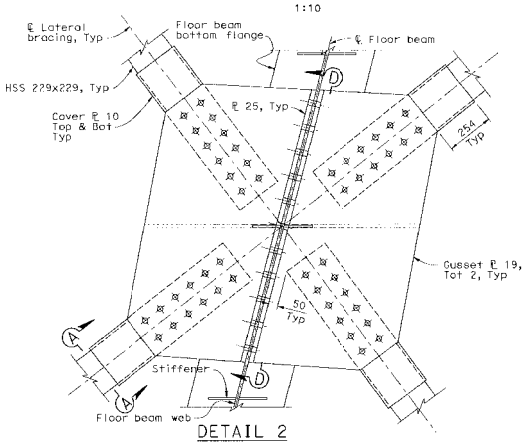

DETAIL 2
1:10

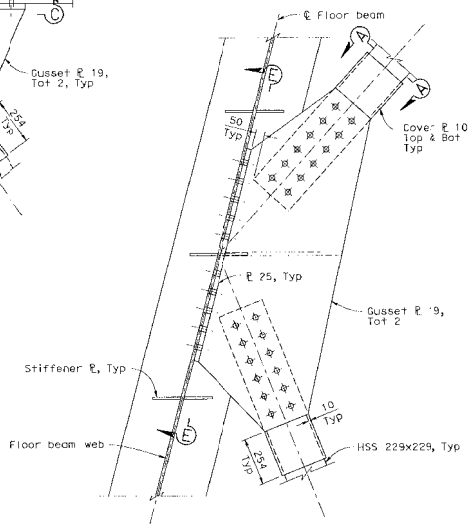

DETAIL 3
1:10

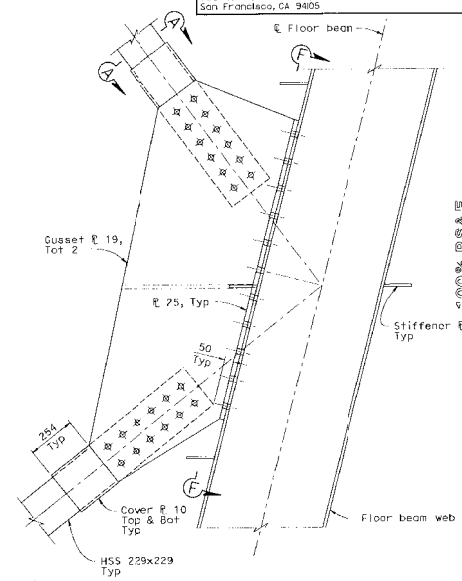

DETAIL 4
1:10

CONTRACT NO. 64-0120R4

CONTRACT CHANGE ORDER NO 140

SHEET 67 OF 84

Notes

1. All bolts for lateral bracing shall be 29 Dia A490, unless noted otherwise. For hole size, minimum spacing, edge distance and end distance, see "General Notes No. 2" sheet.
2. For Section A-A thru F-F, see "Lateral Bracing Details No. 4" sheet.

DIST	COUNTY	ROUTE	KILOMETER POST TOTAL PROJECT	SHEET No	TOTAL
04	SF	80	12.6/13.2		

REGISTERED CIVIL ENGINEER

4-7-08
PLANS APPROVAL DATE

The State of California or its officers or agents shall not be responsible for the accuracy or completeness of electronic copies of this plan sheet.

REGISTERED PROFESSIONAL ENGINEER David Griffith No. C49125 Exp. 9/30/08 CIVIL STATE OF CALIFORNIA

T.Y. LIN / MOFFATT & NICHOL
Two Harrison Street, Suite 500
San Francisco, CA 94105

ALL DIMENSIONS ARE IN MILLIMETERS UNLESS OTHERWISE SHOWN

SAN FRANCISCO OAKLAND BAY BRIDGE
EAST SPAN SEISMIC SAFETY PROJECT

EAST TIE-IN

LATERAL BRACING DETAILS NO. 1

T. Ostrom/M. Whiteside/A. Akinsanya
DESIGN OVERSIGHT

SIGN OFF DATE

DESIGN DETAIL SHEET (METRIC) REV. 3/1/98
#DATE# #TIME# Pen Table File

DESIGN	BY D. Griffith, S. Singh	CHECKED S. Cheng, H. Najm	
DETAILS	BY P. Zhao	CHECKED M. Irwin, A. Lee	
QUANTITIES	BY H. Nelson	CHECKED A. Lee	

PREPARED FOR THE STATE OF CALIFORNIA DEPARTMENT OF TRANSPORTATION

M. Soh
PROJECT ENGINEER
S. Abbas
PROJECT MANAGER

BRIDGE NO. 34-0006 (TEMP)
KILOMETER POST 12.6

CU
EA 0120R

ORIGINAL SCALE IN MILLIMETERS FOR REDUCED PLANS 0 10 20 30 40 50 60 70 80 90 100

DISREGARD PRINTS BEARING EARLIER REVISION DATES

REVISION DATES (PRELIMINARY STAGE ONLY)

SHEET 71 OF 214

FILE =>p:\bb\04-012001\et1\dgn\oklb001.dgn

100% PS&E

USERNAME => ALee DATE PLOTTED => 4/7/2008 TIME PLOTTED => 8:51:40 PM

DIST	COUNTY	ROUTE	KILOMETER POST TOTAL PROJECT	SHEET No	TOTAL
04	SF	80	12.6/13.2		

Caltrans Metric

REGISTERED CIVIL ENGINEER

4-7-08

PLANS APPROVAL DATE

REGISTERED PROFESSIONAL ENGINEER David Griffith No. C49125 Exp. 9/30/08 CIVIL STATE OF CALIFORNIA

The State of California or its officers or agents shall not be responsible for the accuracy or completeness of electronic copies of this plan sheet.

T.Y. LIN / MOFFATT & NICHOL
Two Harrison Street, Suite 500
San Francisco, CA 94105

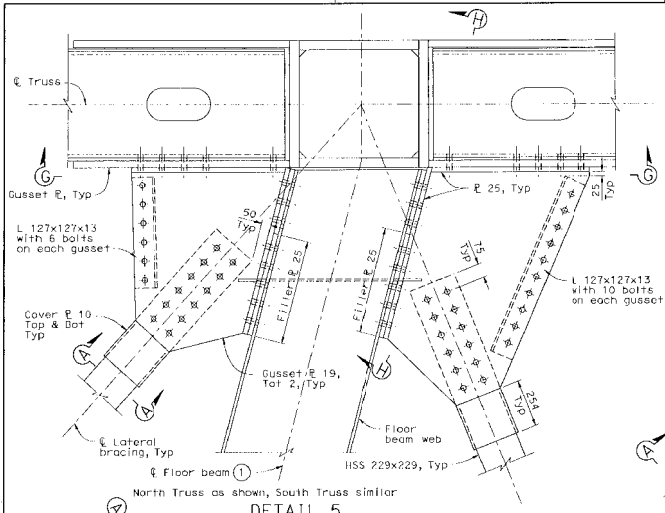

North Truss as shown, South Truss similar

DETAIL 5
1:10

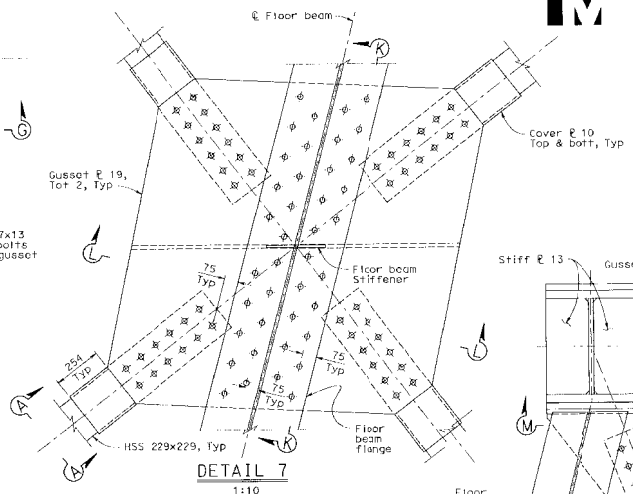

DETAIL 7
1:10

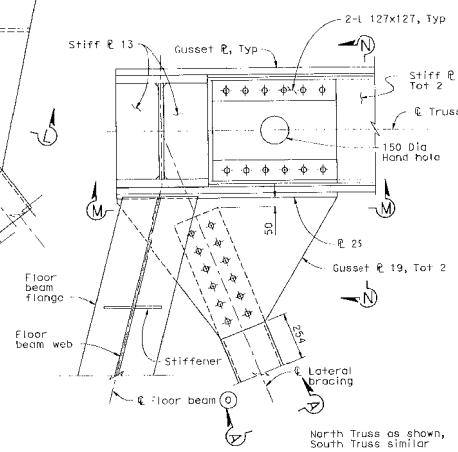

North Truss as shown, South Truss similar

DETAIL 8
1:10

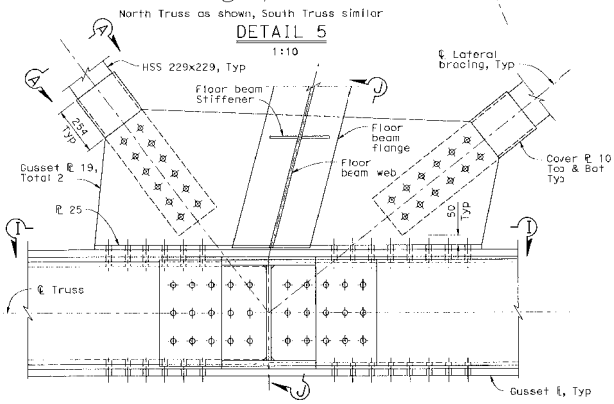

DETAIL 6
1:10

South Truss as shown, North Truss similar

CONTRACT NO. 04-0120R4

CONTRACT CHANGE ORDER NO 140

SHEET 68 OF 84

Notes:

1. All bolts for lateral bracing shall be 29 Dia A490, unless noted otherwise. For hole size, minimum spacing, edge distance and end distance, see "General Notes No. 2" sheet.
2. For Section A-A, see "Lateral Bracing Details No. 4" sheet.
3. For Section G-G thru J-J, see "Lateral Bracing Details No. 5" sheet.
4. For Section K-K thru N-N, see "Lateral Bracing Details No. 6" sheet.

ALL DIMENSIONS ARE IN MILLIMETERS UNLESS OTHERWISE SHOWN

SAN FRANCISCO OAKLAND BAY BRIDGE
EAST SPAN SEISMIC SAFETY PROJECT

EAST TIE-IN

LATERAL BRACING DETAILS NO. 2

T. Ostrom/M. Whiteside/A. Akinsanya
DESIGN OVERSIGHT

SIGN OFF DATE

DESIGN DETAIL SHEET (METRIC) REV. 3/1/99
DATE TIME Pen Table File

DESIGN	BY D. Griffith, S. Singh	CHECKED S. Cheng, H. Najm	
DETAILS	BY P. Zhao	CHECKED M. Irwin, A. Lee	
QUANTITIES	BY H. Nelson	CHECKED A. Lee	

PREPARED FOR THE STATE OF CALIFORNIA DEPARTMENT OF TRANSPORTATION

M. Sah
PROJECT ENGINEER
S. Abbas
PROJECT MANAGER

BRIDGE NO. 34-0006 (TEMP)
KILOMETER POST 12.6

CU
EA 0120R

DISREGARD PRINTS BEARING EARLIER REVISION DATES

REVISION DATES (PRELIMINARY STAGE ONLY)

SHEET 72 OF 214

ORIGINAL SCALE IN MILLIMETERS FOR REDUCED PLANS 0 10 20 30 40 50 60 70 80 90 100

FILE => p:\bb\04-012001\eti\dgn\akibd02.dgn

USERNAME => ALee DATE PLOTTED => 4/7/2008 TIME PLOTTED => 8:15:14 AM FILE => p:\bb\04-012001\eti\dgn\akibd02.dgn

100% PS&E

DIST	COUNTY	ROUTE	KILOMETER POST TOTAL PROJECT	SHEET No.	TOTAL
04	SF	80	12.6/13.2		

REGISTERED CIVIL ENGINEER

4-7-08

PLANS APPROVAL DATE

REGISTERED PROFESSIONAL ENGINEER David Griffith No. C49125 Exp. 9/30/08 CIVIL STATE OF CALIFORNIA

The State of California or its officers or agents shall not be responsible for the accuracy or completeness of electronic copies of this plan sheet.

T.Y. LIN / MOFFATT & NICHOL
Two Harrison Street, Suite 500
San Francisco, CA 94105

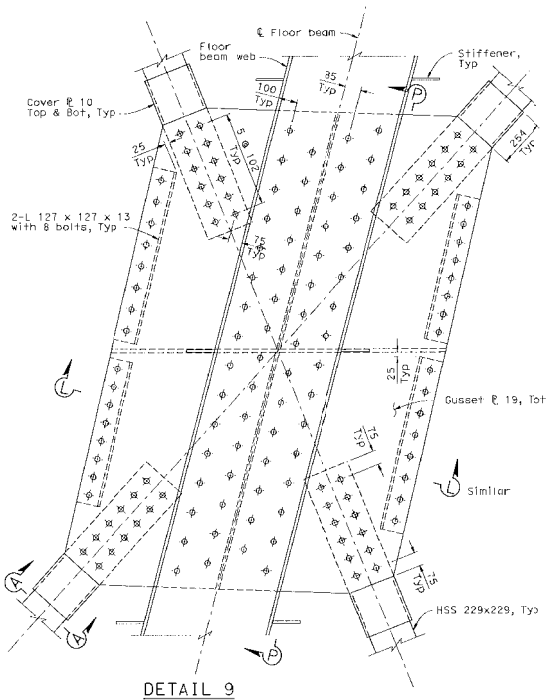

DETAIL 9
1:10

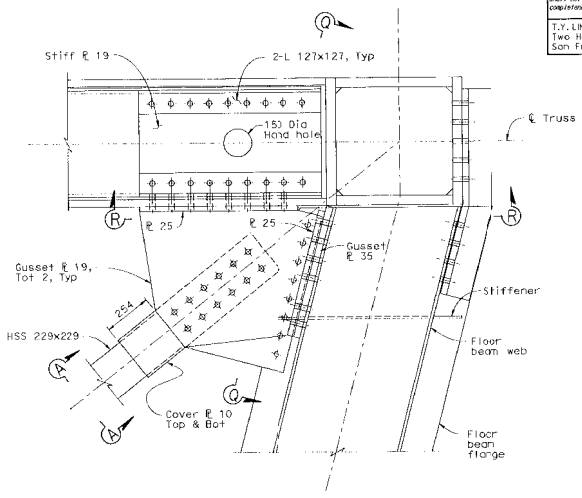

North Truss as shown, South Truss similar

DETAIL 10
1:10

Notes:

1. All bolts for lateral bracing shall be 29 Dia A490, unless noted otherwise. For hole size, minimum spacing, edge distance and end distance, see "General Notes No. 2" sheet.
2. For Section A-A, see "Lateral Bracing Details No. 4" sheet.
3. For Sections L-L & P-P, see "Lateral Bracing Details No. 6" sheet.
4. For section Q-Q & R-R, see "Lateral Bracing Details No. 7" sheet.

CONTRACT NO. 04-0120R4

CONTRACT CHANGE ORDER NO 140

SHEET 69 OF 84

ALL DIMENSIONS ARE IN MILLIMETERS UNLESS OTHERWISE SHOWN

SAN FRANCISCO OAKLAND BAY BRIDGE
EAST SPAN SEISMIC SAFETY PROJECT

EAST TIE-IN

LATERAL BRACING DETAILS NO. 3

T. Ostrom/M. Whiteside/A. Akinsanya
DESIGN OVERSIGHT

SIGN OFF DATE

DESIGN DETAIL SHEET (METRIC) REV. 3/1/99
DATE *TIME* Pen Table File

DESIGN	BY D. Griffith, S. Singh	CHECKED S. Cheng, H. Najm	
DETAILS	BY P. Zhao	CHECKED M. Irwin, A. Lee	
QUANTITIES	BY H. Nelson	CHECKED A. Lee	

PREPARED FOR THE STATE OF CALIFORNIA DEPARTMENT OF TRANSPORTATION

M. Sah
PROJECT ENGINEER
S. Abbas
PROJECT MANAGER

BRIDGE NO. 34-0006 (TEMP)
KILOMETER POST 12.6

CU
EA 0120R4

ORIGINAL SCALE IN MILLIMETERS FOR REDUCED PLANS 0 10 20 30 40 50 60 70 80 90 100

DISREGARD PRINTS BEARING EARLIER REVISION DATES

REVISION DATES (TRIEL/INHART STAGE ONLY) 11/5/03 4/1/08

SHEET 73 OF 214

FILE => p:\bb\04-012001\eti\dgn\aklbd03.dgn

100% PS&E

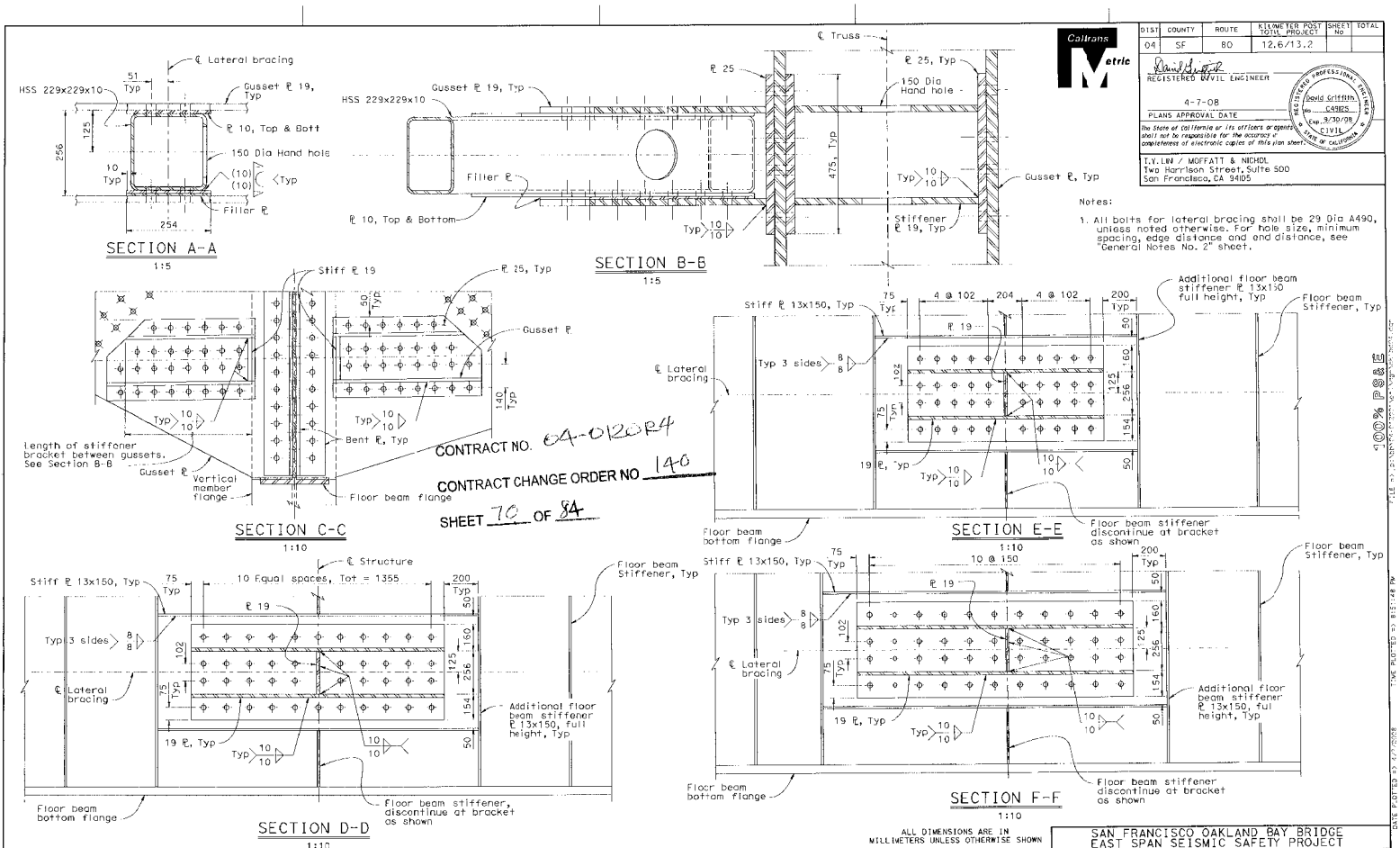

CONTRACT NO. 04-0120R4

CONTRACT CHANGE ORDER NO 140

SHEET 70 OF 84

Notes:

1. All bolts for lateral bracing shall be 29 Dia A490, unless noted otherwise. For hole size, minimum spacing, edge distance and end distance, see "General Notes No. 2" sheet.

DIST	COUNTY	ROUTE	KILOMETER POST TOTAL PROJECT	SHEET No	TOTAL
04	SF	80	12.6/13.2		

REGISTERED CIVIL ENGINEER

4-7-08

PLANS APPROVAL DATE

The State of California or its officers or agents shall not be responsible for the accuracy or completeness of electronic copies of this plan sheet.

REGISTERED PROFESSIONAL ENGINEER David Griffith No. C49125 Exp. 9/30/08 CIVIL STATE OF CALIFORNIA

T.Y. LIN / MOFFATT & NICHOL
Two Harrison Street, Suite 500
San Francisco, CA 94105

ALL DIMENSIONS ARE IN MILLIMETERS UNLESS OTHERWISE SHOWN

SAN FRANCISCO OAKLAND BAY BRIDGE
EAST SPAN SEISMIC SAFETY PROJECT

EAST TIE-IN

LATERAL BRACING DETAILS NO. 4

T. Ostrom/M. Whiteside/A. Akinsanya
DESIGN OVERSIGHT

SIGN OFF DATE

DESIGN DETAIL SHEET (METRIC) REV. 3/1/99
#DATE# #TIME# Pen Table File

DESIGN	BY D. Griffith, S. Singh	CHECKED S. Cheng, H. Najm	
DETAILS	BY P. Zhao	CHECKED M. Irwin, A. Lee	
QUANTITIES	BY H. Nelson	CHECKED A. Lee	

PREPARED FOR THE STATE OF CALIFORNIA DEPARTMENT OF TRANSPORTATION

M. Sah
PROJECT ENGINEER
S. Abbas
PROJECT MANAGER

BRIDGE NO. 34-0006 (TEMP)
KILOMETER POST 12.6

ORIGINAL SCALE IN MILLIMETERS FOR REQUIRED PLANS 0 10 20 30 40 50 60 70 80 90 100

CU
EA 0120R1

DISREGARD PRINTS BEARING EARLIER REVISION DATES

REVISION DATES (PRELIMINARY STAGE ONLY) 11/8/01 4/1/04

SHEET 74 OF 214

FILE =>p:\bb\04-012001\etl\dgn\aklbd04.dgn

100% PS&E

USERNAME => ALAN DATE PLOTTED => 4/7/2008 TIME PLOTTED => 8:51:48 PM

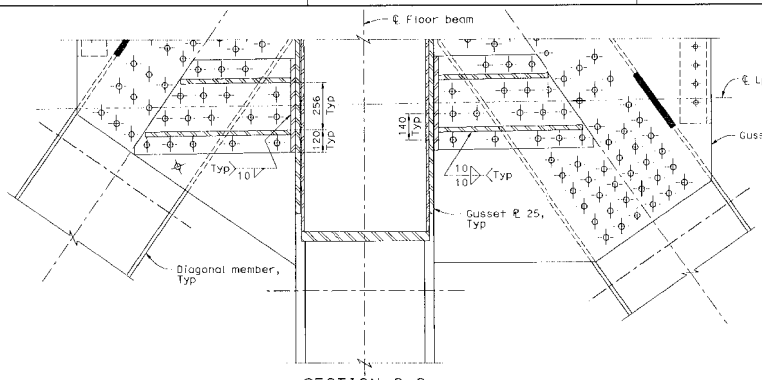

SECTION G-G
1:10

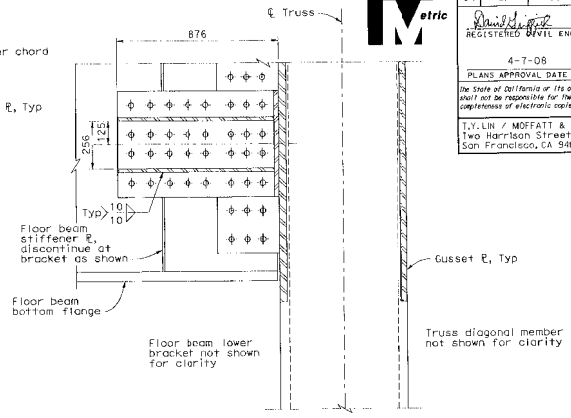

SECTION H-H
1:10

Floor beam brackets not shown

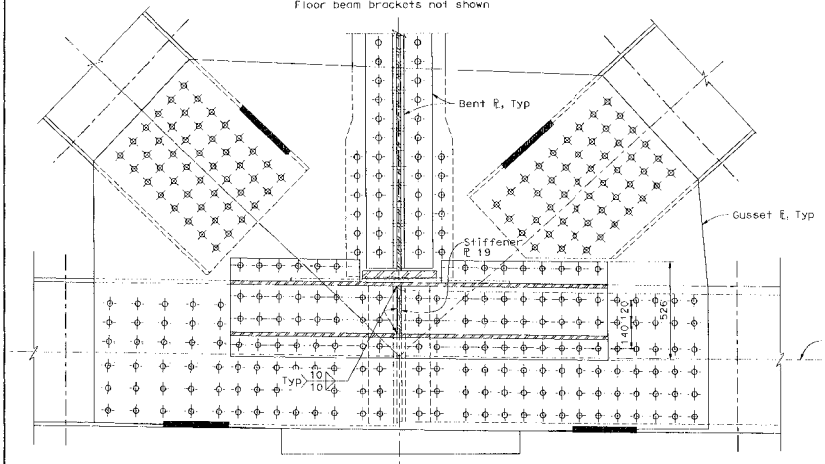

SECTION I-I
1:10

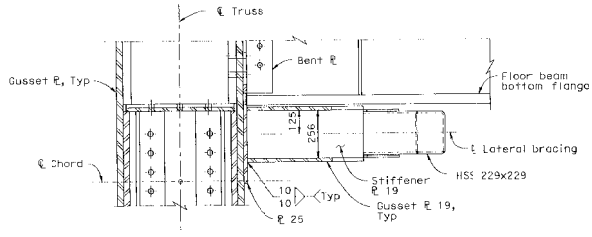

SECTION J-J
1:20

CONTRACT NO. 04-0120R4

CONTRACT CHANGE ORDER NO. 146

SHEET 71 OF 84

Note:

1. All bolts for lateral bracing shall be 29 Dia A490, unless noted otherwise. For hole size, minimum spacing, edge distance and end distance, see "General Notes No. 2" sheet.

ALL DIMENSIONS ARE IN MILLIMETERS UNLESS OTHERWISE SHOWN

DIST	COUNTY	ROUTE	KILOMETER POST TOTAL PROJECT	SHEET NO.	TOTAL
04	SF	80	12.6/13.2		

REGISTERED CIVIL ENGINEER

4-7-08
PLANS APPROVAL DATE

REGISTERED PROFESSIONAL ENGINEER — David Griffith — No. C49125 — Exp. 9/30/08 — CIVIL — STATE OF CALIFORNIA

The State of California or its officers or agents shall not be responsible for the accuracy of competeness of electronic copies of this plan sheet.

T.Y.LIN / MOFFATT & NICHOL
Two Harrison Street, Suite 100
San Francisco, CA 94105

T. Ostrom/M. Whiteside/A. Akinsanya
DESIGN OVERSIGHT

SIGN OFF DATE

DESIGN DETAIL SHEET (METRIC) REV. 3/4/96
●DATE● ●TIME● Pen Table File

	BY	CHECKED
DESIGN	D. Griffith, S. Singh	S. Cheng, H. Najm
DETAILS	P. Zhao	M. Irwin, A. Lee
QUANTITIES	H. Nelson	A. Lee

PREPARED FOR THE STATE OF CALIFORNIA
DEPARTMENT OF TRANSPORTATION

W. Soh — PROJECT ENGINEER
S. Abbas — PROJECT MANAGER

BRIDGE NO. 34-0006 (TEMP.)
KILOMETER POST 12.6

CU
E.A. 0120R4

ORIGINAL SCALE IN MILLIMETERS FOR REDUCED PLANS 0 10 20 30 40 50 60 70 80 90 100

FILE =>p:\06\04-0120R4\stl\dgn\sdr1ba05.dgn

SAN FRANCISCO OAKLAND BAY BRIDGE
EAST SPAN SEISMIC SAFETY PROJECT

EAST TIE-IN

LATERAL BRACING DETAILS NO. 5

DISREGARD PRINTS BEARING EARLIER REVISION DATES →

REVISION DATES (PRELIMINARY STAGE ONLY)

SHEET	OF
75	214

DATE PLOTTED => 4/7/2008
TIME PLOTTED => 8:51:51 PM

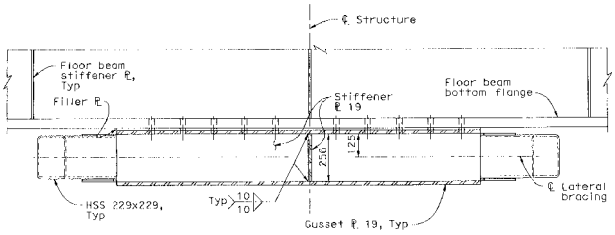

SECTION K-K
1:10

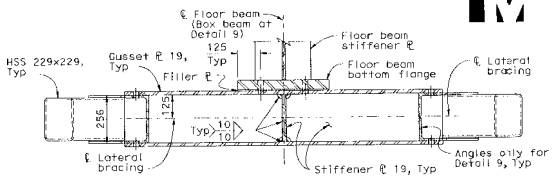

SECTION L-L
1:10

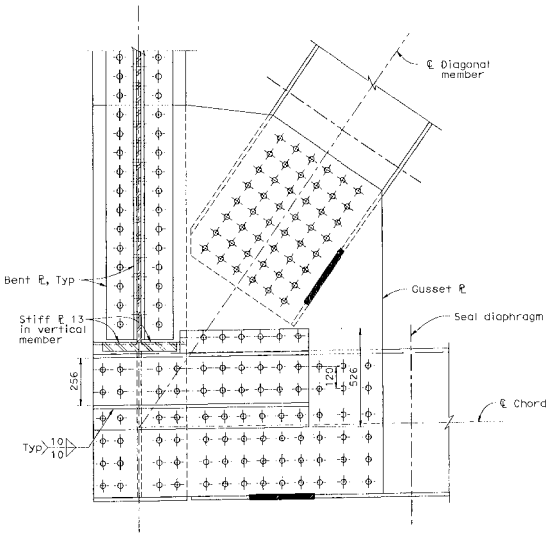

SECTION M-M
1:10

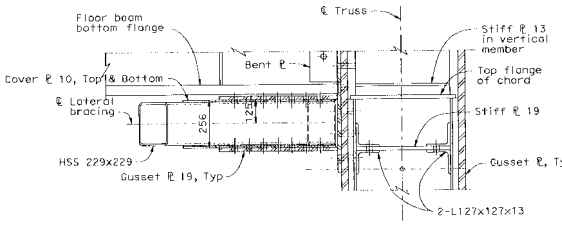

SECTION N-N
1:10

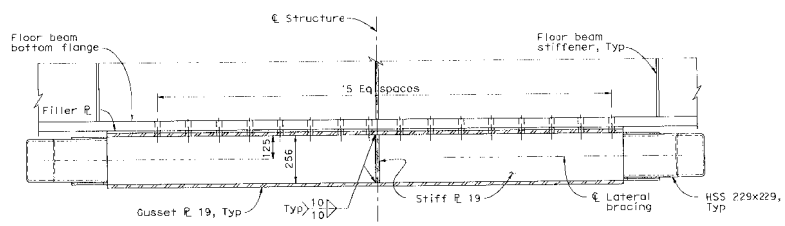

SECTION P-P
1:10

Note:

1. All bolts for lateral bracing shall be 29 Dia A490, unless noted otherwise. For hole size, minimum spacing, edge distance and end distance, see "General Notes No. 2" sheet.

DIST	COUNTY	ROUTE	KILOMETER POST TOTAL PROJECT	SHEET No	TOTAL
04	SF	80	12.3/13.2		

REGISTERED CIVIL ENGINEER

4-7-08
PLANS APPROVAL DATE

The State of California or its officers or agents shall not be responsible for the accuracy or completeness of electronic copies of this plan sheet.

REGISTERED PROFESSIONAL ENGINEER
David Griffith
No. C49125
Exp. 9/30/08
CIVIL
STATE OF CALIFORNIA

T.Y. LIN / MOFFATT & NICHOL
Two Harrison Street, Suite 500
San Francisco, CA 94105

CONTRACT NO. 04-0120R4

CONTRACT CHANGE ORDER NO. 140

SHEET 72 OF 84

ALL DIMENSIONS ARE IN MILLIMETERS UNLESS OTHERWISE SHOWN

SAN FRANCISCO OAKLAND BAY BRIDGE
EAST SPAN SEISMIC SAFETY PROJECT

EAST TIE-IN

LATERAL BRACING DETAILS NO. 6

T. Ostrom/M. Whiteside/A. Akinsanya
DESIGN OVERSIGHT

SIGN OFF DATE

DESIGN DETAIL SHEET (METRIC) REV. 3/9/98
DATE TIME Pen Table File

	BY	CHECKED
DESIGN	D. Griffith, S. Singh	S. Cheng, H. Najm
DETAILS	P. Zhao	M. Irwin, A. Lee
QUANTITIES	H. Nelson	A. Lee

PREPARED FOR THE STATE OF CALIFORNIA DEPARTMENT OF TRANSPORTATION

M. Soh
PROJECT ENGINEER
S. Abbas
PROJECT MANAGER

BRIDGE NO. 34-0006 (TEMP)
KILOMETER POST 12.6

CU
EA 0120R4

DISREGARD PRINTS BEARING EARLIER REVISION DATES

REVISION DATES (PRELIMINARY STAGE ONLY)

SHEET 76 OF 214

ORIGINAL SCALE IN MILLIMETERS FOR REDUCED PLANS 0 10 20 30 40 50 60 70 80 90 100

FILE => s:\bb\04-012001\eti\dgn\aklbb06.dgn

100% PS&E

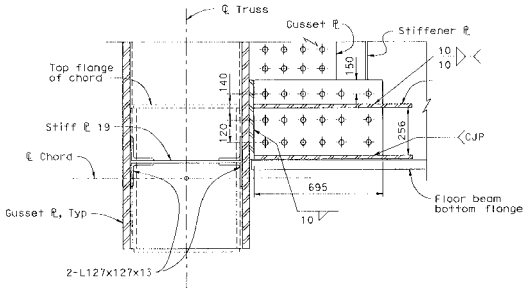

SECTION Q-Q

1:10

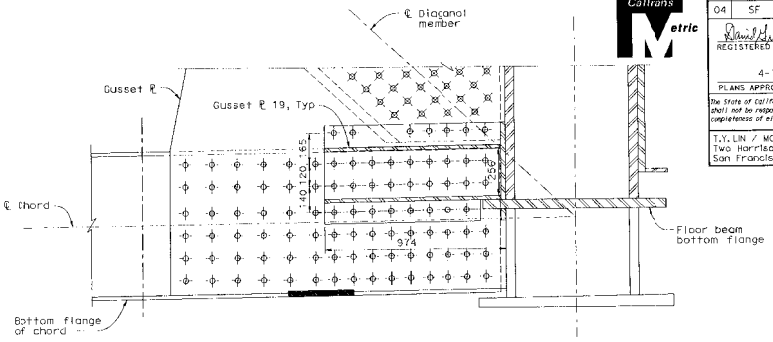

SECTION R-R

1:10

(Floor beam brackets not shown)

DIST	COUNTY	ROUTE	KILOMETER POST TOTAL PROJECT	SHEET NO.	TOTAL
04	SF	80	12.5/13.2		

Caltrans Metric

REGISTERED CIVIL ENGINEER

4-7-08

PLANS APPROVAL DATE

The State of California or its officers or agents shall not be responsible for the accuracy or completeness of electronic copies of this plan sheet.

David Griffith No. C49125 Exp. 9/30/08 CIVIL STATE OF CALIFORNIA

T.Y.LIN / MOFFATT & NICHOL
Two Harrison Street, Suite 500
San Francisco, CA 94105

100% PLANS

CONTRACT NO. 04-0120R4

CONTRACT CHANGE ORDER NO 140

SHEET 73 OF 84

Note:

1. All bolts for lateral bracing shall be 29 Dia A490, unless noted otherwise. For hole size, minimum spacing, edge distance and end distance, see "General Notes No. 2" sheet.

ALL DIMENSIONS ARE IN MILLIMETERS UNLESS OTHERWISE SHOWN

SAN FRANCISCO OAKLAND BAY BRIDGE
EAST SPAN SEISMIC SAFETY PROJECT

EAST TIE-IN

LATERAL BRACING DETAILS NO. 7

Y. Ostrom/M. Whiteside/A. Akinsanya
DESIGN OVERSIGHT

SIGN OFF DATE

DESIGN BY D. Griffith, S. Singh — CHECKED S. Cheng, H. Najm
DETAILS BY P. Zhao — CHECKED W. Irwin, A. Lee
QUANTITIES BY H. Nelson — CHECKED A. Lee

PREPARED FOR THE STATE OF CALIFORNIA
DEPARTMENT OF TRANSPORTATION

M. Soh — PROJECT ENGINEER
S. Abbas — PROJECT MANAGER

BRIDGE NO. 34-0006 (TEMP1)
KILOMETER POST 12.6

DESIGN DETAIL SHEET (METRIC) REV. 3/1/98
DATE *TIME* Pen Table File

ORIGINAL SCALE IN MILLIMETERS FOR REDUCED PLANS 0 10 20 30 40 50 60 70 80 90 100

CU 04-0120R4
EA 0120R4

DISREGARD PRINTS BEARING EARLIER REVISION DATES →

REVISION DATES (PRELIMINARY STAGE ONLY)

DATE	4/08						

SHEET 77 OF 214

FILE => s:\bb\04-0120r4\eri\dgn\ak1bd07.dgn

USERNAME => AKIM

DATE PLOTTED => 4/7/2008

TIME PLOTTED => 15:11:56

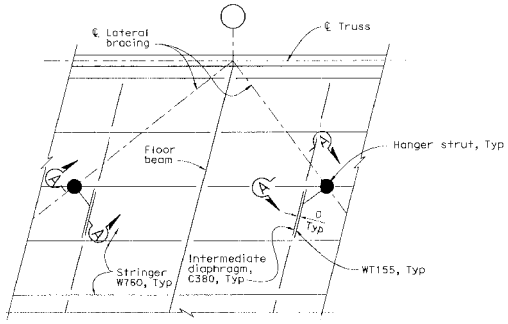

Note: For hanger strut locations, see "Framing Plan No. 2" sheet

HANGER STRUT PLAN

1:100

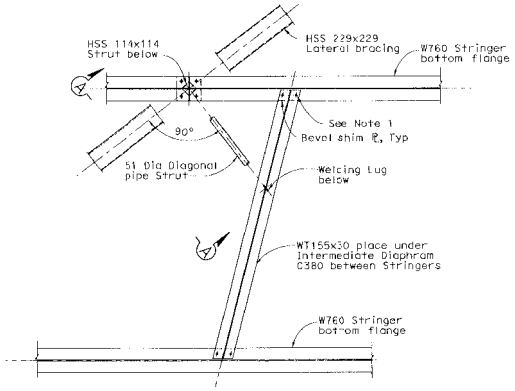

SECTION B-B

1:20

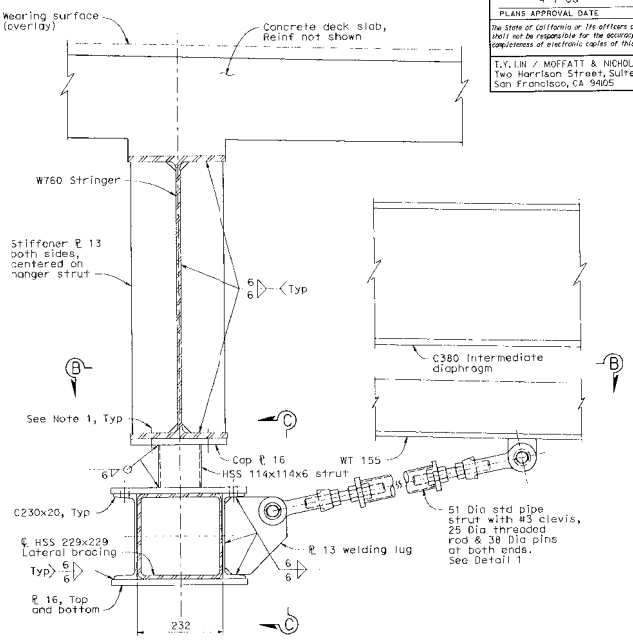

SECTION A-A

1:5

CONTRACT NO. 04-0120R4

CONTRACT CHANGE ORDER NO. 140

SHEET 77 OF 84

Notes:

1. All Bolts shall be 22mm Dia A490, unless noted otherwise. For minimum spacing, edge distances and end distances, see "General Notes No. 2" sheet.
2. For Section C-C, cap plate and Detail 1, see "Lateral Bracing Details No. 9" sheet.

ALL DIMENSIONS ARE IN MILLIMETERS UNLESS OTHERWISE SHOWN

DIST	COUNTY	ROUTE	KILOMETER POST TOTAL PROJECT	SHEET No	TOTAL
04	SF	80	12.6/13.2		

REGISTERED CIVIL ENGINEER — David Griffith, No. C49251, Exp. 9/30/08, CIVIL, State of California

PLANS APPROVAL DATE 4-7-08

The State of California or its officers or agents shall not be responsible for the accuracy or completeness of electronic copies of this plan sheet.

T.Y. LIN / MOFFATT & NICHOL
Two Harrison Street, Suite 300
San Francisco, CA 94105

T. Ostrom/M. Whiteside/A. Akinsanya — DESIGN OVERSIGHT

SIGN OFF DATE

DESIGN DETAIL SHEET (METRIC) REV. 3/3/99 ◆DATE◆ ◆TIME◆ Pen Table File

	BY	CHECKED
DESIGN	D. Griffith, S. Singh	S. Cheng, H. Najm
DETAILS	P. Zhao	CHECKED M. Irwin, A. Lee
QUANTITIES	H. Nilson	CHECKED A. Lee

ORIGINAL SCALE IN MILLIMETERS FOR REDUCED PLANS 0 10 20 30 40 50 60 70 80 90 100

PREPARED FOR THE STATE OF CALIFORNIA DEPARTMENT OF TRANSPORTATION

M. Soh — PROJECT ENGINEER
S. Abbas — PROJECT MANAGER

CU
EA 0120R4

BRIDGE NO. 34-0006 (TEMP.)
KILOMETER POST 12.6

DISREGARD PRINTS BEARING EARLIER REVISION DATES! →

REVISION DATES (PRELIMINARY STAGE ONLY)

SHEET 78 OF 214

SAN FRANCISCO OAKLAND BAY BRIDGE
EAST SPAN SEISMIC SAFETY PROJECT

EAST TIE-IN

LATERAL BRACING DETAILS NO. 8

FILE => p:\pb\04-0120r4\etf\dgn\oklbd08.dgn

DATE PLOTTED => 4/7/2008 8:51:55 PM
TIME PLOTTED => 8:51:55 PM
USERNAME => Alex
FILE => S:\DOCUMENT\CONTRACT\0120R4\ETF\DGN\OKLBD08.DGN
100% PSAE

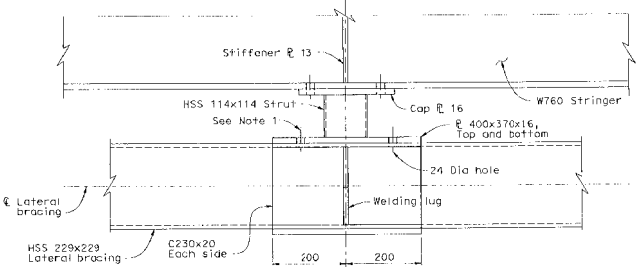

SECTION C-C
1:5

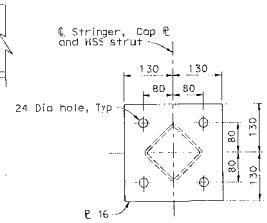

CAP PLATE
1:5

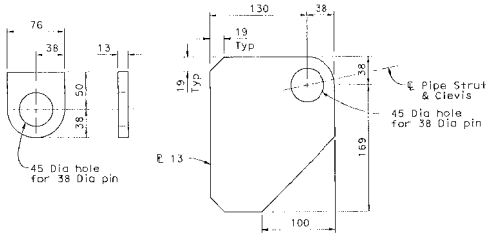

WELDING LUGS
1:2.5

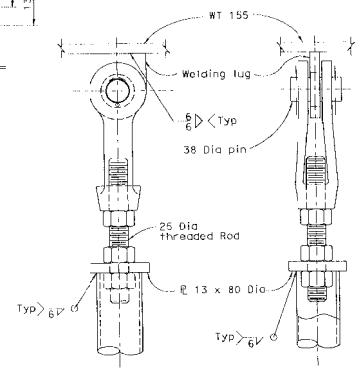

NO. 3 CLEVIS
1:2.5

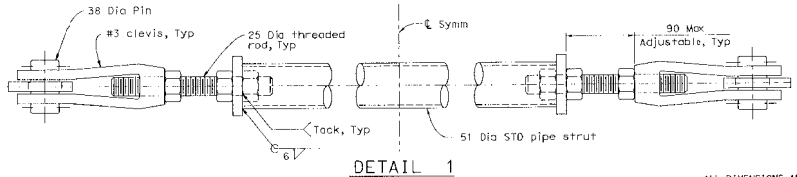

DETAIL 1
1:2.5

DIST	COUNTY	ROUTE	KILOMETER POST TOTAL PROJECT	SHEET No.	TOTAL
04	SF	80	12.6/13.2		

REGISTERED CIVIL ENGINEER
4-7-08
PLANS APPROVAL DATE

REGISTERED PROFESSIONAL ENGINEER David Griffith No. C49125 Exp. 9/30/08 CIVIL STATE OF CALIFORNIA

The State of California or its officers or agents shall not be responsible for the accuracy or completeness of electronic copies of this plan sheet.

T.Y. LIN / MOFFATT & NICHOL
Two Harrison Street, Suite 500
San Francisco, CA 94105

CONTRACT NO. 04-0120R4

CONTRACT CHANGE ORDER NO 140

SHEET 75 OF 84

Note:

1. All Bolts shall be 22mm Dia A490, unless noted otherwise. For minimum spacing, edge distances and end distances, see "General Notes No. 2" sheet.

ALL DIMENSIONS ARE IN MILLIMETERS UNLESS OTHERWISE SHOWN

SAN FRANCISCO OAKLAND BAY BRIDGE
EAST SPAN SEISMIC SAFETY PROJECT

EAST TIE-IN

LATERAL BRACING DETAILS NO. 9

T. Ostrom/M. Whiteside/A. Akinsanya
DESIGN OVERSIGHT

SIGN OFF DATE

DESIGN DETAIL SHEET (METRIC) (REV. 3/1/98)
DATE *TIME* Pen Table File

DESIGN	BY D. Griffith, S. Singh	CHECKED S. Cheng, H. Najm	
DETAILS	BY P. Zhao	CHECKED M. Irwin, A. Lee	
QUANTITIES	BY H. Nelson	CHECKED A. Lee	

PREPARED FOR THE STATE OF CALIFORNIA DEPARTMENT OF TRANSPORTATION

M. Sah
PROJECT ENGINEER
S. Abbas
PROJECT MANAGER

BRIDGE NO. 34-0006 (TEMP)
KILOMETER POST 12.6

CU
EA 0120R4

ORIGINAL SCALE IN MILLIMETERS FOR REDUCED PLANS 0 10 20 30 40 50 60 70 80 90 100

DISREGARD PRINTS BEARING EARLIER REVISION DATES

REVISION DATES (PRELIMINARY STAGE ONLY) 11/08 1/08

SHEET 79 OF 214

FILE => s:\bb\04-0120R1\etl\dgn\akib009.dgn

USERNAME => ALee DATE PLOTTED => 4/7/2008 TIME PLOTTED => 8:52:01 PM FILE => p:\bb\04-0120R1\etl\dgn\akib009.dgn

100% PS&E

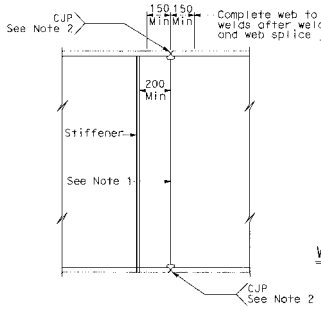

LONG GIRDER SPLICE
NO SCALE

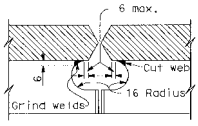

WEB COPE AT LONG GIRDER SPLICE
NO SCALE

Girder splice Notes:

1. Splices in webs and flanges of girders shall be CJP.
2. Grind welds flush at all tension flange welds, exterior weld surfaces on bottom compression flanges, and welds on the exterior face of exterior girders. Grind all surfaces of compression flanges when required for NDE.
3. Splices in webs and flanges of girders shall be at least 200 mm from stiffener.
4. All shop splices in each component part of a cover-plated beam or built-up members shall be made before the component part is welded to other component parts of the member. Splicing of long members shall conform to the details shown.
5. Web cope shall conform to the detail shown. Alternate details may be permitted subject to approval of the Engineer.

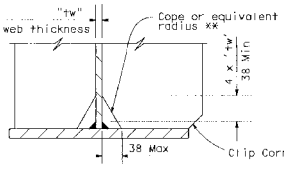

COPE DETAIL
NO SCALE

* Omit clip at bottom flange when less than 50 mm.

** Alternate cope details may be permitted subject to approval of the Engineer.

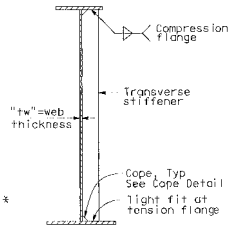

TRANSVERSE STIFFENER
NO SCALE

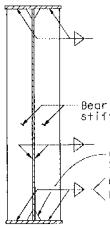

BEARING STIFFENER
NO SCALE

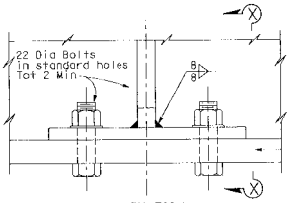

ELEVATION

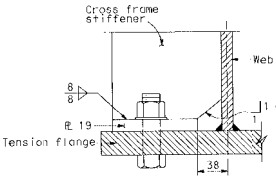

SECTION X-X

CROSS FRAME STIFFENER DETAIL
NO SCALE

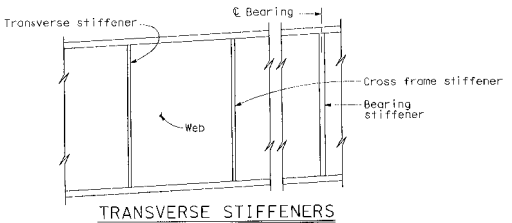

TRANSVERSE STIFFENERS
NO SCALE

Note: Under full dead load and deck shrinkage, as shown on the camber diagram, girder ends, bearing stiffeners, transverse stiffeners and cross frame stiffeners shall be vertical except they may be normal to grade for grades less than 2 percent.

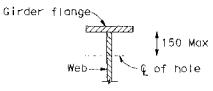

25 Max diameter hole at 1.2 m Min spacing to be used for falsework support when specified by the Contractor. Contractor to determine location, size and spacing.

50 Max diameter hole to be drilled where lighting conduit passes through girder web. For location and size of hole see "Road Plans".

HOLES FOR CONDUIT AND FALSEWORK
NO SCALE

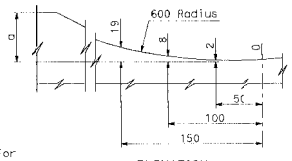

ELEVATION

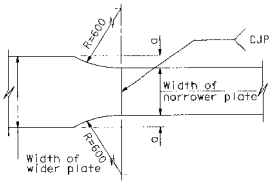

TRANSITION OF WIDTH

FLANGE TRANSITION DETAIL
NO SCALE

ALL DIMENSIONS ARE IN MILLIMETERS UNLESS OTHERWISE SHOWN

DIST	COUNTY	ROUTE	KILOMETER POST TOTAL PROJECT	SHEET NO	TOTAL
04	SF	80	12.6/13.2		

Mark Chan
REGISTERED CIVIL ENGINEER
4-7-08
PLANS APPROVAL DATE
The State of California or its officers or agents shall not be responsible for the accuracy or completeness of electronic copies of this plan sheet.

T.Y. LIN / MOFFATT & NICHOL
Two Harrison Street, Suite 100
San Francisco, CA 94105

CONTRACT NO. 04-012204
CONTRACT CHANGE ORDER NO 140
SHEET 76 OF 84

T. Ostrom/M. Whiteside/A. Aktinsanya	DESIGN	BY M. Chan, K. Liu	CHECKED S. Cheng, H. Wajn, H. Nelson	PREPARED FOR THE STATE OF CALIFORNIA DEPARTMENT OF TRANSPORTATION
DESIGN OVERSIGHT	DETAILS	BY S. Lee	CHECKED A. Lee	
SIGN OFF DATE	QUANTITIES	BY H. Nelson	CHECKED A. Lee	

M. Sah	PROJECT ENGINEER
S. Abbas	PROJECT MANAGER

BRIDGE NO. 34-0006 (TEMP.)
KILOMETER POST 12.6

SAN FRANCISCO OAKLAND BAY BRIDGE
EAST SPAN SEISMIC SAFETY PROJECT

EAST TIE-IN

STEEL GIRDER DETAILS

CU EA 012084

DISREGARD PRINTS BEARING EARLIER REVISION DATES

REVISION DATES (PRELIMINARY STAGE ONLY)

SHEET 84 OF 214

DESIGN DETAIL SHEET (METRIC) REV. 3/1/99
@DATE@ @TIME@ Pen Table File

ORIGINAL SCALE IN MILLIMETERS FOR REDUCED PLANS 0 10 20 30 40 50 60 70 80 90 100

FILE => J:\BR\04-012001\etl\dgn\wkdg001.dgn

USERNAME => ALCE

DATE PLOTTED => 4/7/2008

TIME PLOTTED => 8:52:03 PM

100% PLOT SCALE

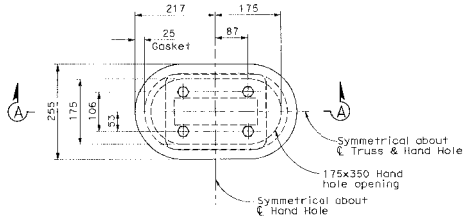

PLAN
1:5

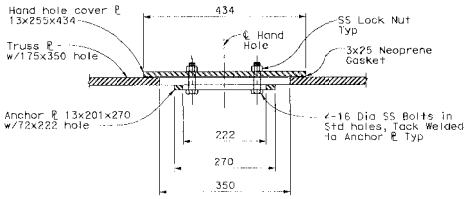

SECTION A-A
1:5

HAND HOLE COVER ℙ DETAIL

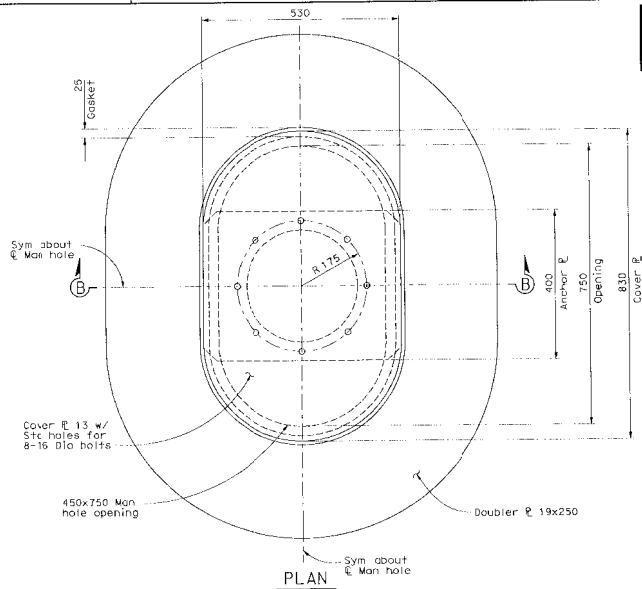

PLAN
1:5

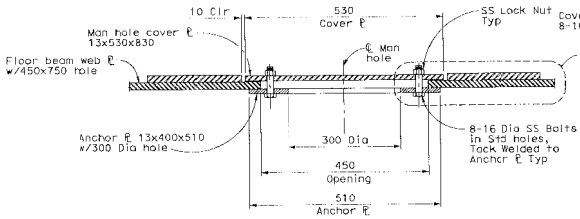

SECTION B-B
1:5

MAN HOLE COVER ℙ DETAIL

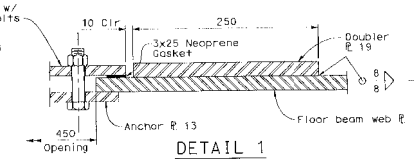

DETAIL 1
NO SCALE

DIST	COUNTY	ROUTE	KILOMETER POST TOTAL PROJECT	SHEET NO.	TOTAL
04	SF	80	12.6/13.2		

REGISTERED CIVIL ENGINEER
4-7-08
PLANS APPROVAL DATE

REGISTERED PROFESSIONAL ENGINEER
David Griffith
No. C49125
Exp. 9/30/08
CIVIL
STATE OF CALIFORNIA

The State of California or its officers or agents shall not be responsible for the accuracy or completeness of electronic copies of this plan sheet.

T.Y. LIN / MOFFATT & NICHOL
Two Harrison Street, Suite 300
San Francisco, CA 94105

CONTRACT NO. 04-0120R4

CONTRACT CHANGE ORDER NO 140

SHEET 77 OF 84

100% PS&E

ALL DIMENSIONS ARE IN MILLIMETERS UNLESS OTHERWISE SHOWN

SAN FRANCISCO OAKLAND BAY BRIDGE
EAST SPAN SEISMIC SAFETY PROJECT

EAST TIE-IN

MAN HOLE & HAND HOLE DETAILS

T. Ostrom/M. Whiteside/A. Akinsanya
DESIGN OVERSIGHT

SIGN OFF DATE

DESIGN DETAIL SHEET (METRIC) (REV. 3/1/98)
●DATE● ●TIME● Pen Table File

DESIGN	BY D. Griffith	CHECKED S. Cheng, H. Najm	
DETAILS	BY V. Ortega	CHECKED A. Lee	
QUANTITIES	BY H. Nelson	CHECKED A. Lee	

ORIGINAL SCALE IN MILLIMETERS FOR REDUCED PLANS 0 10 20 30 40 50 60 70 80 90 100

PREPARED FOR THE
STATE OF CALIFORNIA
DEPARTMENT OF TRANSPORTATION

M. Sah
PROJECT ENGINEER
S. Abbas
PROJECT MANAGER

BRIDGE NO. 34-0006 (TEMP)
KILOMETER POST 12.6

CU
EA 012084

DISREGARD PRINTS BEARING EARLIER REVISION DATES

REVISION DATES (PRELIMINARY STAGE ONLY)

SHEET 85 OF 214

FILE => p:\ab\04-012001\eti\dgn\ckmhd01.dgn

USERNAME => ALEO DATE PLOTTED => 4/7/2008 TIME PLOTTED => 8:52:07 PM FILE => p:\ab\04-012001\eti\dgn\ckmhd01.dgn

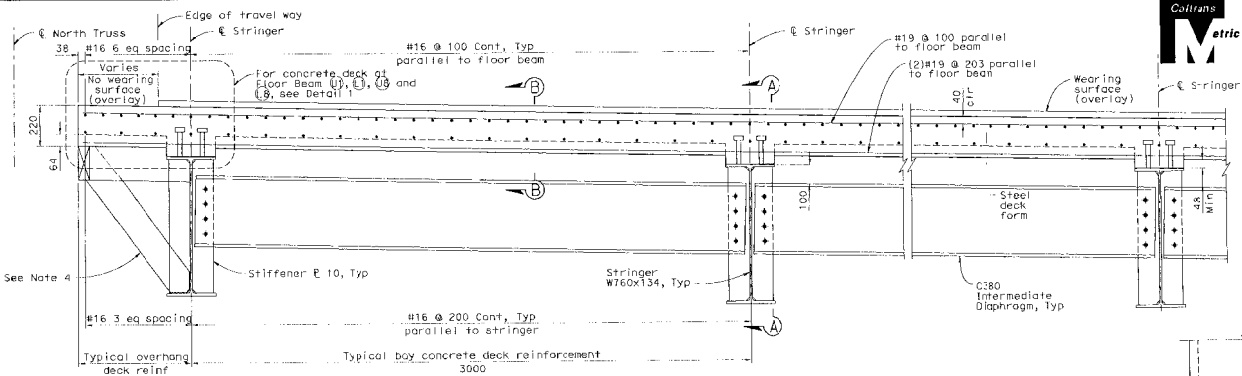

PARTIAL CROSS SECTION

1:10

Note: Dimensions are given parallel to Floor Beams

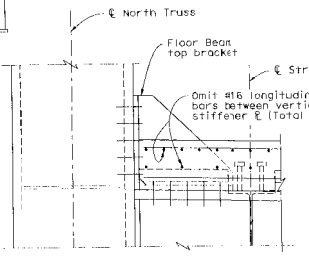

(Floor Beam (L9) shown, (U1), (L1) and (U8) similar)

DETAIL 1

1:10

Shown parallel to stringers

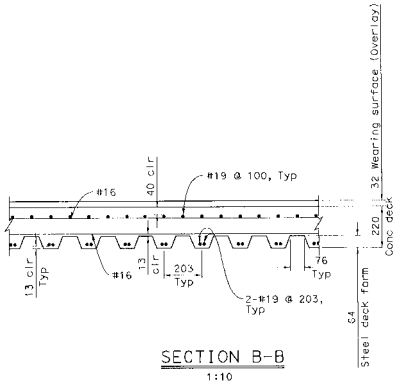

SECTION B-B

1:10

Shown parallel to Floor Beams

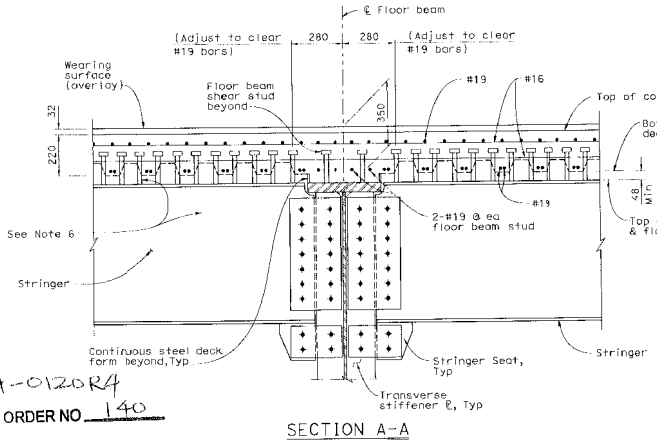

SECTION A-A

1:10

Note: For details not shown, see Section B-B

ALL DIMENSIONS ARE IN MILLIMETERS UNLESS OTHERWISE SHOWN

Notes:

1. Concrete shall be light weight (17.3 kN/m^3 or 110 pcf) with f'c=28 MPa.
2. Wearing surface (overlay) 575 N/m^2 (12 lb/ft^2) assumed.
3. Steel formwork with sound proofing material at 240 N/m^2 (5 lb/ft^2) assumed.
4. The Contractor shall be responsible for securing steel deck forms to the supporting steel deck members by spot welding or screws. Contractor shall provide all required form accessories for edge, end closure and temporary supports during deck concrete casting.
5. For stringer and intermediate diaphragm connection details, see "Stringer Details" sheets.
6. For Stringer shear stud detail, see "Stringer Details" sheet.

CONTRACT NO. 04-0120R4

CONTRACT CHANGE ORDER NO. 140

SHEET 18 OF 34

DIST	COUNTY	ROUTE	KILOMETER POST TOTAL PROJECT	SHEET NO	TOTAL
04	SF	80	12.6/13.2		

Caltrans Metric

Mark Chen
REGISTERED CIVIL ENGINEER
4-7-08
PLANS APPROVAL DATE
The State of California or its officers or agents shall not be responsible for the accuracy or completeness of electronic copies of this plan sheet.

Chi Mark Chen
No. C 40582
EXP. 03/31/09
CIVIL
STATE OF CALIFORNIA

T.Y. LIN / MOFFATT & NICHOL
Two Harrison Street, Suite 500
San Francisco, CA 94105

T. Ostrom/M. Whitesides/A. Aktinsanya
DESIGN OVERSIGHT

SIGN OFF DATE

DESIGN DETAIL SHEET (MCRD) REV. 3/1/98
●DATE● ●TIME● Pen Table File

	BY	CHECKED
DESIGN	M. Chen, K. Liu	S. Cheng, B. Naja, H. Nelson
DETAILS	S. Lee	M. Irwin, A. Lee
QUANTITIES	H. Nelson	A. Lee

PREPARED FOR THE STATE OF CALIFORNIA
DEPARTMENT OF TRANSPORTATION

ORIGINAL SCALE IN MILLIMETERS FOR REDUCED PLANS 0 10 20 30 40 50 60 70 80 90 100

M. Soh — PROJECT ENGINEER
S. Abbas — PROJECT MANAGER

BRIDGE NO. 34-0005 (TEMP)
KILOMETER POST 12.6

CU 04120R4
EA 04120R4

F:\LF_proj\sfobb\04-012001\et1\ugd\dkeddd01.dgn

DISREGARD PRINTS BEARING EARLIER REVISION DATES: ——→ DATE 4/08

SAN FRANCISCO OAKLAND BAY BRIDGE
EAST SPAN SEISMIC SAFETY PROJECT

EAST TIE-IN

CONCRETE DECK DETAILS NO. 1

SHEET 86 OF 214

100% PS&E

DATE PLOTTED => 4/7/2008
TIME PLOTTED => 8:29:13 AM
USERNAME => ALANE

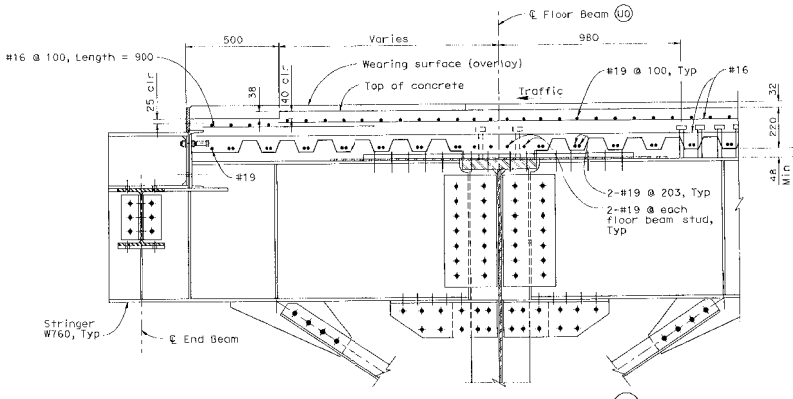

CONCRETE DECK AT FLOOR BEAM U0

1:10

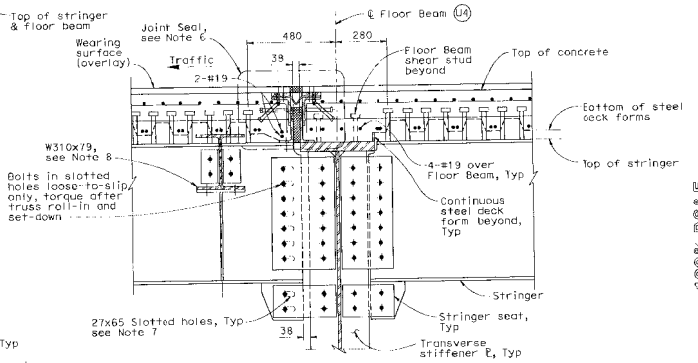

UPPER DECK EXPANSION JOINT DETAIL

1:10

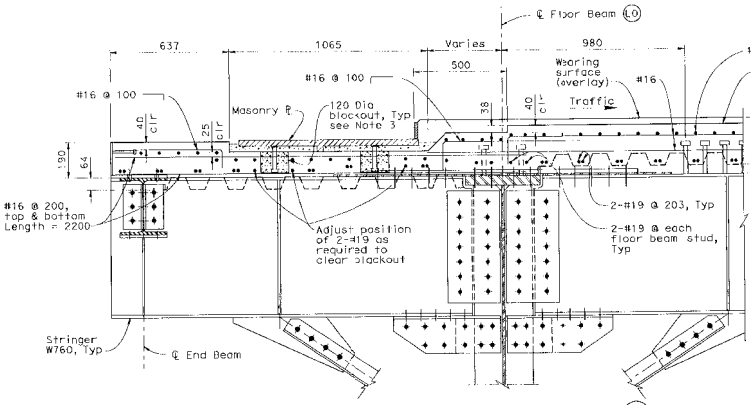

CONCRETE DECK AT FLOOR BEAM L0

1:10

Notes:

1. For Stringer connection details, see "Stringer Details" sheets.
2. For dimensions not shown and for Expansion Joint Details, see "Bent 52A Expansion Joint Details" sheets
3. Concrete deck in blockout area shall be poured after installation of Bent 52A expansion joint deck panel plate assemblies.
4. For stringer, end beam and the connection details, see "Stringer Details" sheet.
5. For reinforcing details not shown, see "Concrete Deck Details No. 1" sheet.
6. For joint seal assembly details, see "Joint Seal Assembly" sheet.
7. For slotted hole connections, see "Stringer Details" sheet.
8. For W310 end beam details, see "Stringer Details" sheets.

CONTRACT NO. 04-0120R4

CONTRACT CHANGE ORDER NO. 140

SHEET 79 OF 91

DIST	COUNTY	ROUTE	KILOMETER POST TOTAL PROJECT	SHEET NO.	TOTAL
04	SF	80	12.6/13.2		

Caltrans Metric

Mark Chen
REGISTERED CIVIL ENGINEER

4-7-08
PLANS APPROVAL DATE

Dn Mark Chen No. C 40582 exp. 03/31/09 CIVIL STATE OF CALIFORNIA

The State of California or its officers or agents shall not be responsible for the accuracy or completeness of electronic copies of this plan sheet.

T.Y. LIN / MOFFATT & NICHOL
Two Harrison Street, Suite 500
San Francisco, CA 94105

100% PS&E

FILE => p:\0s0\04-0120r4\plt\dgn\0lcdd02.dgn
TIME PLOTTED => 9:52:16 PM
DATE PLOTTED => 4/7/2008
USERNAME => ALSS

T. Ostrom/M. Whiteside/A. Akinsanya	DESIGN	M. Chen, K. Liu	S. Cheng, H. Hoja, R. Nelson
DESIGN OVERSIGHT	DETAILS	S. Lee	M. Irwin, A. Lee
SIGN OFF DATE	QUANTITIES	H. Nelson	A. Lee

PREPARED FOR THE STATE OF CALIFORNIA DEPARTMENT OF TRANSPORTATION

M. Soh — PROJECT ENGINEER
S. Addas — PROJECT MANAGER

CU
EA 0120R4

FILE => p:\0s0\04-0120r4\plt\dgn\0lcdd02.dgn

ALL DIMENSIONS ARE IN MILLIMETERS UNLESS OTHERWISE SHOWN

ORIGINAL SCALE IN MILLIMETERS FOR REDUCED PLANS 0 10 20 30 40 50 60 70 80 90 100

DESIGN DETAIL SHEET (METRIC) REV. 3/1/98 — DATE — TIME — Pen Table File

BRIDGE NO. 32-0006 (TEMP.)
KILOMETER POST 12.6

SAN FRANCISCO OAKLAND BAY BRIDGE
EAST SPAN SEISMIC SAFETY PROJECT

EAST TIE-IN

CONCRETE DECK DETAILS NO. 2

DISREGARD PRINTS BEARING EARLIER REVISION DATES →

REVISION DATES (PRELIMINARY STAGE ONLY)

SHEET 87 OF 214

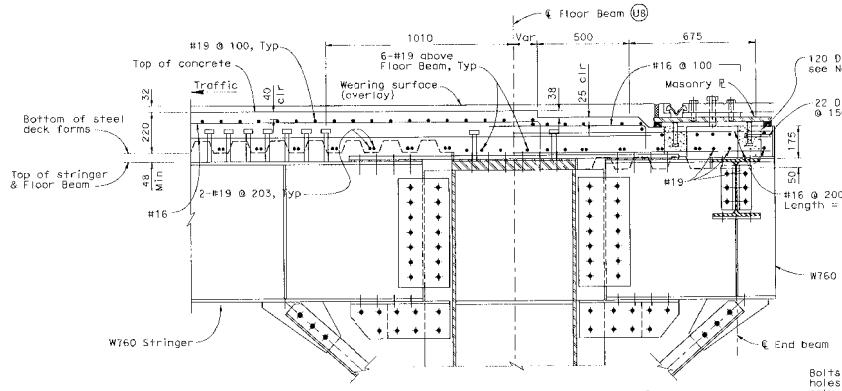

CONCRETE DECK AT FLOOR BEAM U8

1:10

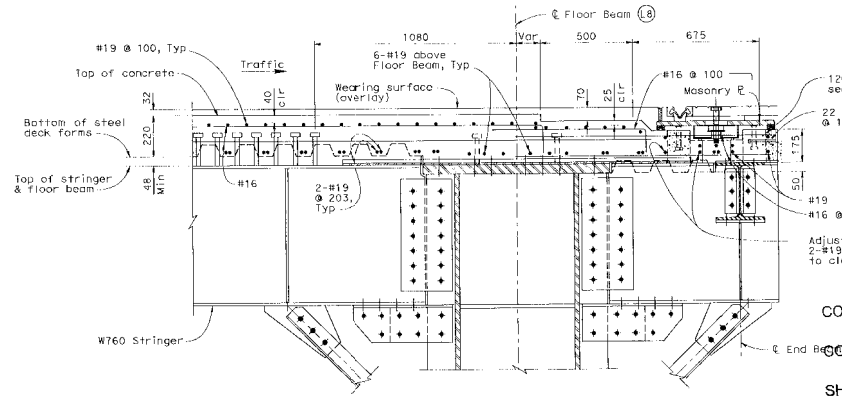

CONCRETE DECK AT FLOOR BEAM L8

1:10

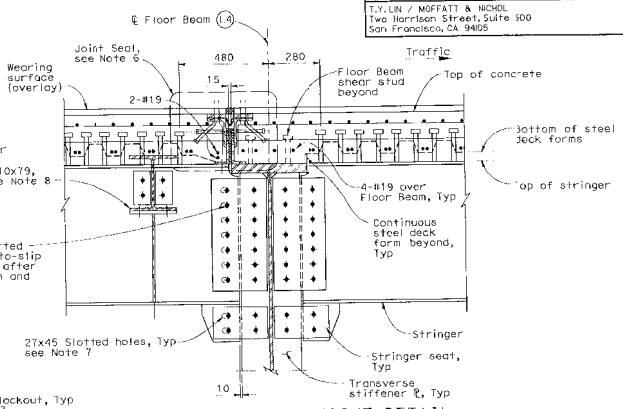

LOWER DECK EXPANSION JOINT DETAIL

1:10

Notes:

1. For Stringer connection details, see "Stringer Details" sheets.
2. For dimensions not shown and for Expansion Joint Details, see "Pier E1 Expansion Joint Details" sheets.
3. Concrete deck in blockout area shall be poured after installation of Pier E1 expansion joint deck panel plate assemblies.
4. For stringer, end beam and the connection details, see "Stringer Details" sheet.
5. For reinforcing details not shown, see "Concrete Deck Details No. 1" sheet.
6. For joint seal assembly details, see "Joint Seal Assembly" sheet.
7. For slotted hole connections, see "Stringer Details" sheet.
8. For W310 end beam details, see "Stringer Details" sheets.

CONTRACT NO. 04-0120R4

CONTRACT CHANGE ORDER NO. 140

SHEET 80 OF 84

DIST	COUNTY	ROUTE	KILOMETER POST TOTAL PROJECT	SHEET NO.	TOTAL
04	SF	80	12.6/13.2		

Caltrans Metric

Mark Chan
REGISTERED CIVIL ENGINEER
4-7-08
PLANS APPROVAL DATE

REGISTERED PROFESSIONAL ENGINEER — Chi Mark Chan — No. C 40582 — Exp. 03/31/09 — CIVIL — STATE OF CALIFORNIA

The State of California or its officers or agents shall not be responsible for the accuracy or completeness of electronic copies of this plan sheet.

T.Y.LIN / MOFFATT & NICHOL
Two Harrison Street, Suite 500
San Francisco, CA 94105

100% PS&E

FILE => p:\bb\04-0120r4\plans\stl\dgn\cnc03.dgn

DATE PLOTTED => 4/7/2008 8:19:21 PM

USERNAME => J.K.Ng

ALL DIMENSIONS ARE IN MILLIMETERS UNLESS OTHERWISE SHOWN

SAN FRANCISCO OAKLAND BAY BRIDGE
EAST SPAN SEISMIC SAFETY PROJECT

EAST TIE-IN

CONCRETE DECK DETAILS NO. 3

T. Ostrom/M. Whiteside/A. Akinsanya	DESIGN	BY M. Chen, K. Liu	CHECKED S. Cheng, H. Nojm, H. Nelson
DESIGN OVERSIGHT	DETAILS	BY S. Lee	CHECKED M. Irwin, A. Lee
SIGN OFF DATE	QUANTITIES	BY H. Nelson	CHECKED A. Lee

PREPARED FOR THE STATE OF CALIFORNIA
DEPARTMENT OF TRANSPORTATION

M. Soh — PROJECT ENGINEER
S. Abbas — PROJECT MANAGER

BRIDGE NO. 34-0006 (TEMP.)
KILOMETER POST 12.6

CU
EA 01209R

DISREGARD PRINTS BEARING EARLIER REVISION DATES →

REVISION DATES (PRELIMINARY STAGE ONLY)

DESIGN DETAIL SHEET (METRIC) REV. 3/1/99
BDATE= MTIME= Pen Table File

ORIGINAL SCALE IN MILLIMETERS FOR REDUCED PLANS 0 10 20 30 40 50 60 70 80 90 100

FILE => p:\bb\04-0120r4\plans\stl\dgn\cnc03.dgn

DRAWN	CHKD										BRIDGE	OF
JLMG	KMA										88	214

DIST	COUNTY	ROUTE	KILOMETER POST TOTAL PROJECT	SHEET No	TOTAL
04	SF	80	12.6/13.2		

Mark Chen
REGISTERED CIVIL ENGINEER

4-7-08
PLANS APPROVAL DATE

REGISTERED PROFESSIONAL ENGINEER
Chi Mark Chen
No. C 40582
Exp. 03/31/09
CIVIL
STATE OF CALIFORNIA

The State of California or its officers or agents shall not be responsible for the accuracy or completeness of electronic copies of this plan sheet.

T.Y. LIN / MOFFATT & NICHOL
Two Harrison Street, Suite 500
San Francisco, CA 94105

CONTRACT NO. 04-0120R4

CONTRACT CHANGE ORDER NO. 140

SHEET 81 OF 84

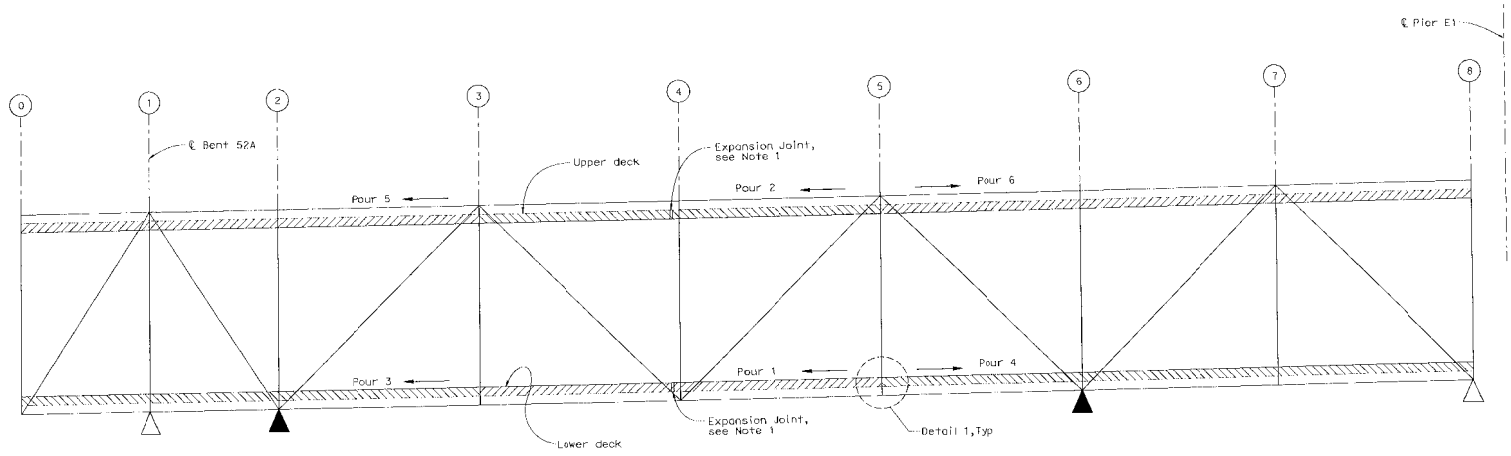

CONCRETE DECK POURING SEQUENCE

ELEVATION

No Scale

Deck is cast while on skid bent supports

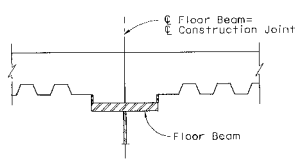

DETAIL 1

No Scale

TYPICAL DECK CONSTRUCTION JOINT

Note: Longitudinal reinforcement shall be continuous through construction joint.

LEGEND:

- or — Indicates limits of concrete placement in deck pour sequence number as noted.
- Indicates direction of concrete pour
- Indicates final support location
- Indication support location at time of deck casting

Notes:

1. For concrete deck expansion joint details, see "Concrete Deck Details" sheet.

ALL DIMENSIONS ARE IN MILLIMETERS UNLESS OTHERWISE SHOWN

SAN FRANCISCO OAKLAND BAY BRIDGE
EAST SPAN SEISMIC SAFETY PROJECT

EAST TIE-IN

POUR SEQUENCE

T. Ostrom/M. Whiteside/A. Akinsanya	DESIGN	BY M. Chen, M. Yu	CHECKED S. Cheng, H. Najm	M. Sah	BRIDGE NO. 34-0006 (TEMP)
DESIGN OVERSIGHT	DETAILS	BY S. Lee	CHECKED A. Lee	PROJECT ENGINEER S. Abbas	KILOMETER POST 12.6
SIGN OFF DATE	QUANTITIES	BY H. Nelson	CHECKED A. Lee	PROJECT MANAGER	

PREPARED FOR THE STATE OF CALIFORNIA DEPARTMENT OF TRANSPORTATION

CU
EA 0120R1

DISREGARD PRINTS BEARING EARLIER REVISION DATES → 11/4/08 6/9/08

REVISION DATES (PRELIMINARY STAGE ONLY)

SHEET 89 OF 214

DESIGN DETAIL SHEET (METRIC) REV. 3/1/00
DATE: TIME: Pen Table File

ORIGINAL SCALE IN MILLIMETERS FOR REDUCED PLANS 0 10 20 30 40 50 60 70 80 90 100

FILE => p:\bb\04-0120R1\eli\dgn\mkpsq01.dgn

100% PS&E

FILE => p:\bb\04-0120R1\eli\dgn\mkpsq01.dgn
TIME PLOTTED => 8:52:24 PM
DATE PLOTTED => 4/7/2008
USERNAME => ALee

DIST	COUNTY	ROUTE	KILOMETER POST TOTAL PROJECT	SHEET No	TOTAL
04	SF	80	12.6/13.2		

Mark Chen
REGISTERED CIVIL ENGINEER

4-7-08
PLANS APPROVAL DATE

The State of California or its officers or agents shall not be responsible for the accuracy or completeness of electronic copies of this plan sheet.

REGISTERED PROFESSIONAL ENGINEER
Chi Mark Chen
No. C 40582
Exp. 03/31/09
CIVIL
STATE OF CALIFORNIA

T.Y. LIN / MOFFATT & NICHOL
Two Harrison Street, Suite 500
San Francisco, CA 94105

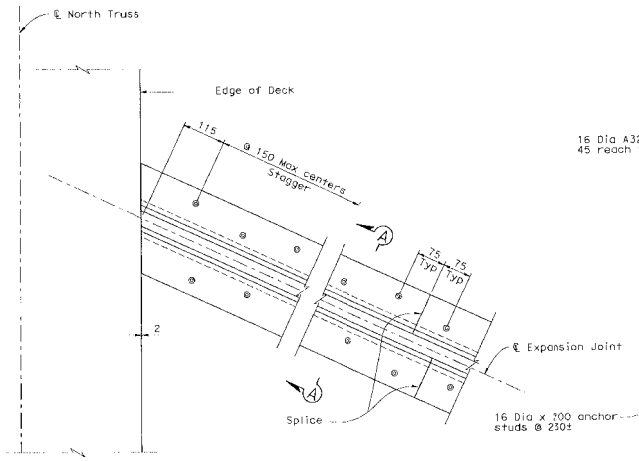

BOLT & PLATE LAYOUT - PLAN
No Scale

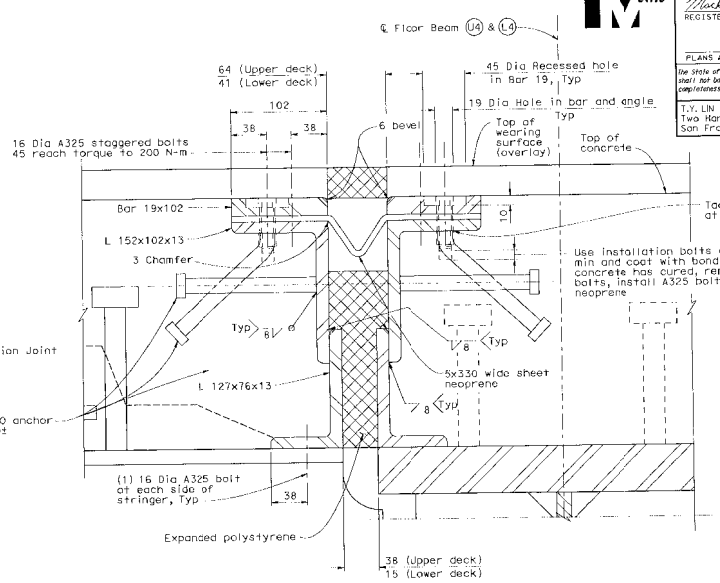

SECTION A-A
1:2

Note:
Stagger anchor studs @ 115± on centers:

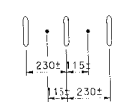

100% PS&E

CONTRACT NO. 04-0120R4

CONTRACT CHANGE ORDER NO 140

SHEET 82 OF 84

Notes:

1. Full penetration butt welds may be substituted for fillet welds on all anchor studs.
2. Alternate types of anchor studs may be permitted subject to the approval by the Engineer.
3. All metal parts to be painted or galvanized after fabrication.
4. Sheet neoprene shall be fabricated in one continuous piece or joints shall be vulcanized. Neoprene shall be fabricated to bend around corners. 25 mm holes in neoprene sheets shall be drilled or punched so that the neoprene is not distorted at the time of installation.

ALL DIMENSIONS ARE IN MILLIMETERS UNLESS OTHERWISE SHOWN

SAN FRANCISCO OAKLAND BAY BRIDGE
EAST SPAN SEISMIC SAFETY PROJECT

EAST TIE-IN

JOINT SEAL ASSEMBLY

T. Ostrom/M. Whiteside/A. Akinsanya
DESIGN OVERSIGHT

SIGN OFF DATE

DESIGN DETAIL SHEET (METRIC) (REV. 3/1/98)
©DATE© ©TIME© Pen Table File

DESIGN	BY M. Chen, K. Liu	CHECKED S. Cheng, H. Najm, H. Nelson	
DETAILS	BY S. Lee	CHECKED A. Lee	
QUANTITIES	BY H. Nelson	CHECKED A. Lee	

ORIGINAL SCALE IN MILLIMETERS FOR REDUCED PLANS 0 10 20 30 40 50 60 70 80 90 100

PREPARED FOR THE STATE OF CALIFORNIA DEPARTMENT OF TRANSPORTATION

M. Sah
PROJECT ENGINEER
S. Abbas
PROJECT MANAGER

CU
EA 0120R4

BRIDGE NO. 34-0006 (TEMP)
KILOMETER POST 12.6

DISREGARD PRINTS BEARING EARLIER REVISION DATES

REVISION DATES (PRELIMINARY STAGE ONLY)
11/8/05 4/7/08

SHEET 112 OF 214

FILE =>p:\hb\04-0120R1\eti\dgn\akjsa01.dgn

USERNAME => ALee DATE PLOTTED => 4/7/2008 TIME PLOTTED => 8:52:27 PM FILE => p:\hb\04-0120R1\eti\dgn\akjsa01.dgn

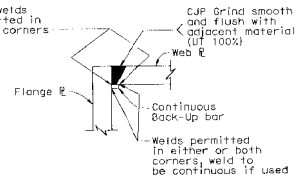

DETAIL 2
Scale 1:5

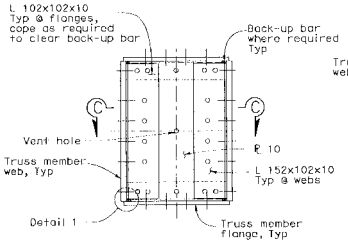

TYPICAL SEAL DIAPHRAGM

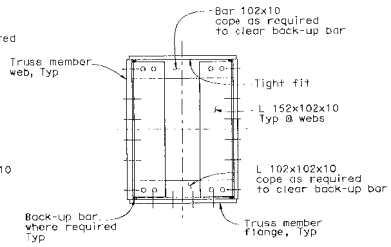

TYPICAL INTERMEDIATE DIAPHRAGM

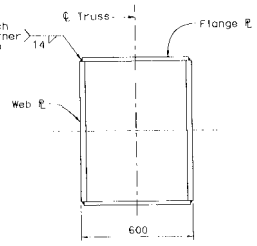

TYPICAL BUILT-UP BOX MEMBER

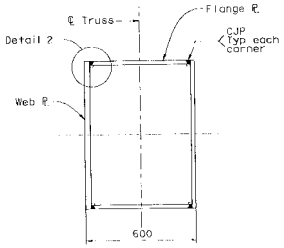

CHORDS U3-U4, U4-U5, L4-L5, L5-L6
DIAGONAL U7-L8

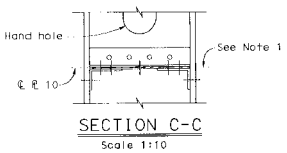

SECTION C-C
Scale 1:10

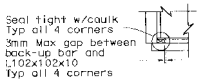

DETAIL 1
Scale 1:5

CONTRACT NO. 04-0120R4

CONTRACT CHANGE ORDER NO 140

SHEET 83 OF 84

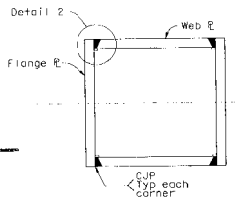

VERTICALS L1-U1 & L8-U8

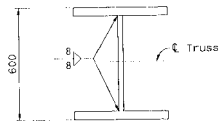

TYPICAL BUILT-UP I MEMBER

TYPICAL DIAPHRAGM DETAILS FOR TRUSS MEMBERS
Scale 1:10

Diaphragm Notes for all Truss members:

1. Seal diaphragms at each end of box members adjacent to edge of connection gusset plate. For locations see "Truss Layout" sheets.
2. Intermediate diaphragms at 1500 Max spacing in verticals L1-U1 & L8-U8 and chords U3-U4, U4-U5, L4-L5, L5-L6 and diagonal U7-L8.
3. All bolts shall be 25 Dia A490. For hole size, minimum spacing, edge distance and end distance, see "General Notes No. 2" sheet.

TYPICAL TRUSS MEMBER WELDS
Scale 1:10

ALL DIMENSIONS ARE IN MILLIMETERS UNLESS OTHERWISE SHOWN

Caltrans Metric

DIST	COUNTY	ROUTE	KILOMETER POST TOTAL PROJECT	SHEET NO.	TOTAL
04	SF	80	12.5/13.2		

REGISTERED CIVIL ENGINEER
4-7-08
PLANS APPROVAL DATE
The State of California or its officers or agents shall not be responsible for the accuracy or completeness of electronic copies of this plan sheet.

David Griffith No. C49175 Exp. 9/30/08 CIVIL STATE OF CALIFORNIA

T.Y. LIN / MOFFATT & NICHOL
Two Harrison Street, Suite 500
San Francisco, CA 94105

SAN FRANCISCO OAKLAND BAY BRIDGE
EAST SPAN SEISMIC SAFETY PROJECT
EAST TIE-IN
MISCELLANEOUS DETAILS NO. 1

T. Ostrom/M. Whiteside/A. Akinsanya	DESIGN	BY D. Griffith	CHECKED S. Cheng, H. Najm
DESIGN OVERSIGHT	DETAILS	BY V. Ortega	CHECKED A. Lee
SIGN OFF DATE	QUANTITIES	BY H. Nelson	CHECKED A. Lee

PREPARED FOR THE STATE OF CALIFORNIA DEPARTMENT OF TRANSPORTATION

M. Soh	PROJECT ENGINEER
S. Abbas	PROJECT MANAGER

BRIDGE NO. 34-0006 (TEMP.)
KILOMETER POST 12.6

CU
EA 0120R4

DISREGARD PRINTS BEARING EARLIER REVISION DATES →

REVISION DATES (PRELIMINARY STAGE ONLY)

SHEET 115 OF 214

DESIGN DETAIL SHEET (METRIC) REV. 3/1/98
SCALES ● 1/TIME ● Pen Table File

ORIGINAL SCALE IN MILLIMETERS FOR REDUCED PLANS 0 10 20 30 40 50 60 70 80 90 100

FILE => p:\bb\04-0120r4\wfl\cgn\dmis01.dgn

USERNAME => XLAM

TIME PLOTTED => 8:52:28 PM

DATE PLOTTED => 4/7/2008

100% PS&E

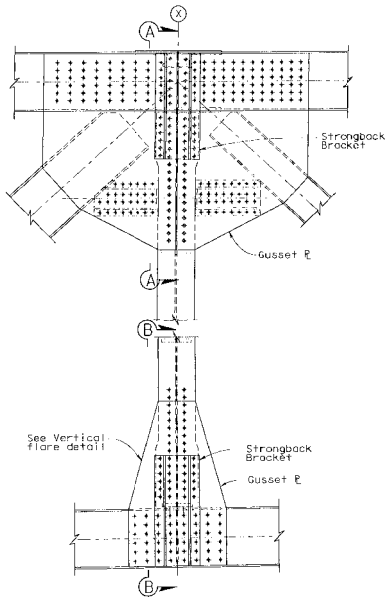

ELEVATION-TYPICAL TRUSS VERTICAL

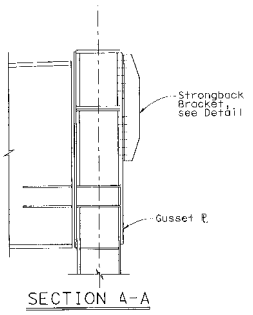

SECTION A-A

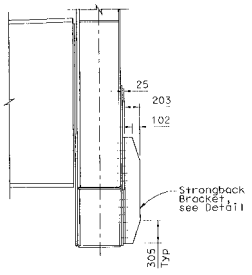

SECTION B-B

Note: Typical North and South Truss at all verticals except portal frames.

STRONGBACK BRACKET
Scale 1:25

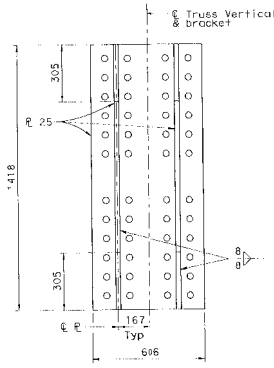

STRONGBACK BRACKET DETAIL
Scale 1:10

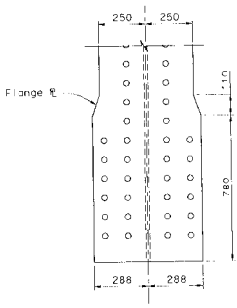

Note: Flare both ends of both flange plates of all Vertical 1 members.

VERTICAL FLARE DETAIL
Scale 1:10

100% PS&E

FILE = s:\pic\04-012001\eff\dgn\04-012001eff_tmp.dgn

DATE PLOTTED => 4/7/2008

USERNAME => ...

Caltrans Metric

DIST	COUNTY	ROUTE	KILOMETER POST TOTAL PROJECT	SHEET NO	TOTAL
04	SF	80	12.6/13.2		

REGISTERED CIVIL ENGINEER — David Griffith No. C49125 Exp. 9/30/09 CIVIL — STATE OF CALIFORNIA

4-7-08
PLANS APPROVAL DATE

The State of California or its officers or agents shall not be responsible for the accuracy or completeness of electronic copies of this plan sheet.

T.Y. LIN / MOFFATT & NICHOL
Two Harrison Street, Suite 300
San Francisco, CA 94105

CONTRACT NO 04-012084

CONTRACT CHANGE ORDER NO 140

SHEET 84 OF 84

ALL DIMENSIONS ARE IN MILLIMETERS UNLESS OTHERWISE SHOWN

SAN FRANCISCO OAKLAND BAY BRIDGE
EAST SPAN SEISMIC SAFETY PROJECT

EAST TIE-IN

MISCELLANEOUS DETAILS NO. 2

T. Ostrom/M. Whiteside/A. Akinsanya	DESIGN	BY D. Griffith	CHECKED S. Cheng, H. Najm
DESIGN OVERSIGHT	DETAILS	BY V. Ortega	CHECKED A. Lee
SIGN OFF DATE	QUANTITIES	BY H. Nelson	CHECKED A. Lee

PREPARED FOR THE STATE OF CALIFORNIA
DEPARTMENT OF TRANSPORTATION

M. Soh — PROJECT ENGINEER
S. Abbas — PROJECT MANAGER

BRIDGE NO. 34-0006 (TEMP)
KILOMETER POST 12.6

CU EA 012084

DISREGARD PRINTS BEARING EARLIER REVISION DATES →

REVISION DATES (FOR PRELIMINARY STAGE ONLY) — DATE 4/7/08

SHEET 116 OF 214

DESIGN DETAIL SHEET (METRIC) REV. 3/1/99
DATE⊕ TIME⊕ Pen Table File

ORIGINAL SCALE IN MILLIMETERS FOR REDUCED PLANS 0 10 20 30 40 50 60 70 80 90 100

FILE = s:\pic\bb\04-012001\eff\dgn\04ms02.dgn

CONTRACT CHANGE ORDER

Change Requested by: Engineer

CCO 140	Suppl. No. 1	Contract No. 04 - 0120R4	Road SF-80-12.6/13.2	FED. AID LOC.: ACBRIM-080-1(097)N

To: **CC MYERS INC**

You are directed to make the following changes from the plans and specifications or do the following described work not included in the plans and specifications for this contract. ***NOTE: This change order is not effective until approved by the Engineer.***

Description of work to be done, estimate of quantities and prices to be paid. (Segregate between additional work at contract price, agreed price and force account.) Unless otherwise stated, rates for rental of equipment cover only such time as equipment is actually used and no allowance will be made for idle time. This last percentage shown is the net accumulated increase or decrease from the original quantity in the Engineer's Estimate.

Adjustment of Compensation at Lump Sum:

In accordance with provisions of the original Contract Change Order No. 140, provide compensation to the Contractor for beginning delivery of the fabrication steel of the East Tie-In truss by February 20, 2009. In consideration for the Department- caused delays to the fabrication of the truss, this delivery shall be considered to have achieved the full incentive as specified under Contract Change Order No. 140.

The Contractor will be compensated a lump sum of $300,000.00. This sum constitutes full and final compensation for the incentive payment specified under the original Contract Change Order No. 140.

Total Cost of Adjustment of Compensation at Lump Sum $300,000.00

Estimated Cost: Increase ☑ Decrease ☐ **$300,000.00**

By reason of this order the time of completion will be adjusted as follows: Deferred

Submitted by

Signature	Resident Engineer BILL CASEY	Date 6-9-09

Approval Recommended by

Signature	SFOBB Construction Manager MIKE FORNER	Date 6-9-09

Engineer Approval by

Signature	SFOBB Construction Manager MIKE FORNER	Date 7-6-09

We the undersigned contractor, have given careful consideration to the change proposed and agree, if this proposal is approved, that we will provide all equipment, furnish the materials, except as may otherwise be noted above, and perform all services necessary for the work above specified, and will accept as full payment therefor the prices shown above.

NOTE: If you, the contractor, do not sign acceptance of this order, your attention is directed to the requirements of the specifications as to proceeding with the ordered work and filing a written protest within the time therein specified.

Contractor Acceptance by

Signature	(Print name and title) DANIEL E. HUMICK, PRESIDENT	Date 7/02/09

STATE OF CALIFORNIA - DEPARTMENT OF TRANSPORTATION

CONTRACT CHANGE ORDER MEMORANDUM

TO: MIKE FORNER / DEANNA VILCHECK	FILE: **E.A.** 04 - 0120R4
FROM: BILL CASEY	**CO-RTE-PM** SF-80-12.6/13.2
	FED. NO. ACBRIM-080-1(097)N
CCO#: **140** SUPPLEMENT#: **1** Category Code: **BZZZ**	CONTINGENCY BALANCE (incl. this change) **$64,018,433.59**
COST: **$300,000.00** INCREASE ☑ DECREASE ☐	HEADQUARTERS APPROVAL REQUIRED? ☐ YES ☑ NO
SUPPLEMENTAL FUNDS PROVIDED: **$0.00**	IS THIS REQUEST IN ACCORDANCE WITH ENVIRONMENTAL DOCUMENTS? ☑ YES ☐ NO
CCO DESCRIPTION: Stinger Truss Fabrication Incentive	**PROJECT DESCRIPTION:** CONSTRUCT ROUTE 80 TEMP BYPASS STRUCTURE

Original Contract Time:	Time Adj. This Change:	Previously Approved CCO Time Adjustments:	Percentage Time Adjusted: (including this change)	Total # of Unreconciled Deferred Time CCO(s): (including this change)
475 Day(s)	**DEF** Day(s)	**1195** Day(s)	**252** %	**8**

THIS CHANGE ORDER PROVIDES FOR:

compensating the Contractor for achieving the full incentive payment specified under the original Contract Change Order No. 140 for the early delivery of the fabricated steel of the East Tie-In truss.

This project, the Temporary Bypass Structure (TBS), was awarded in March 2004 to construct a detour that will allow for the tie in of the new east span of the San Francisco Oakland Bay Bridge to Yerba Buena Island. The TBS encompasses three main structures, the East Tie-In to the existing bridge, the West Tie-In (WTI) to Yerba Buena Island, and the Viaduct structure between the two tie ins.

A December 14, 2006 Department strategy memorandum, approved by Tony Anziano, Toll Bridge Program Manager, and Richard Land, Chief Engineer, recommended that the Department assume the design responsibility for the East Tie-In (ETI) structure. Based on this memorandum, the design of the structure was changed from a design that incorporated the existing steel truss bridge with the new structure to a design that replaces the existing structure with a new structure (roll out / roll in).

Contract Change Order No. 140 provided compensation to the Contractor for the fabrication of approximately 1,270 metric tons of steel for the ETI steel truss. The change order also provided an incentive / disincentive clause based on the delivery of the fabricated steel to the jobsite beginning on March 8, 2009. The incentive / disincentive was specified at $10,000.00 per day with a maximum of 30 days of incentive / disincentive resulting in a maximum payment or credit of $300,000.00. The Contractor has now completed the delivery of the fabricated steel and this change order provides for the full incentive payment specified under the change order.

The Contractor began delivery of steel to the jobsite on February 20, 2009. Based on the March 8, 2009 baseline delivery date established under the original change order, this delivery would have achieved 16 days of incentive payments. This change order, however, recognizes significant Department-caused delays that were incurred by the fabricator in the shop drawing approval process. These delays were incurred over the period from August 2008 through January 2009. A preliminary time impact analysis of these delays show a minimum 1-month delay to the fabrication of the steel due to the shop drawing approval process. Recognizing this delay results in the Contractor having delivered the steel 46 days prior to the adjusted baseline delivery date. This change order provides the full 30 days of incentive payments.

Costs associated with the impacts to the steel fabrication resulting from the Department-caused delays to the work are being compensated separately under Contract Change Order No. 184.

Compensation shall be paid as an adjustment of compensation at an agreed lump sum price of $300,000.00 which shall be financed from the contract's contingency funds. A cost and time impact analysis is on file supporting this payment.

This change order shall be processed unilaterally as this supplement was anticipated under the original Contract Change Order No. 140 and adheres to the provisions specified under that change order.

Adjustment of contract time is deferred pending completion of the work specified in this change as it may become the controlling operation in accordance with Section 8-1.07 "Liquidated Damages", of the Standard Specifications and Section 10-1.20 "Time Related Overhead (TRO)" of the Special Provisions.

ADA Notice: For individuals with sensory disabilities, this document is available in alternate formats. For information call: (916) 654-6410 or TDD (916) 654-3880 or write Records and Forms Management, 1120 N Street, MS-89, Sacramento, CA 95814.

Compensation for delays resulting from this work will be made in accordance with Section 8-1.09 "Right of Way Delays" of the Standard Specifications and Section 10-1.20 "Time Related Overhead" of the Special Provisions.

This change was concurred with by Alec Melkonians - Asst. Project Manager and Hong Wong - Project Engineer, and Patrick Treacy - HQ Asst. Construction Coordinator. This change order was approved by the Toll Bridge Program Oversight Committee (TBPOC) on June 4, 2009.

Maintenance concurrence is not required as this is an administrative change.

RECEIVED
010735 JUL 14 09

CONCURRED BY:			
Construction Engineer:	Bill Casey, Resident Engineer	Date	6-9-09
Bridge Engineer:		Date	
Project Engineer:	Hong Wong, PE	Date	5/21/09
Project Manager:	Alec Melkonians	Date	5/21/09
FHWA Rep.:		Date	
Environmental:		Date	
Other (specify):	Patrick Treacy, HQ Asst.Const.Co	Date	5/26/09
Other (specify):		Date	
District Prior Approval By:		Date	
HQ (Issue Approve) By:	Bob Molera, HQ CCO Engineer	Date	
Resident Engineer's Signature:		Date	6-9-09

ESTIMATE OF COST

	THIS REQUEST	TOTAL TO DATE
ITEMS	$0.00	$0.00
FORCE ACCOUNT	$0.00	$0.00
AGREED PRICE	$0.00	$10,920,525.00
ADJUSTMENT	$300,000.00	$300,000.00
TOTAL	$300,000.00	$11,220,525.00

FEDERAL PARTICIPATION

☐ PARTICIPATING ☐ PARTICIPATING IN PART ☑ NONE
☐ NON-PARTICIPATING (MAINTENANCE) ☐ NON-PARTICIPATING

FEDERAL SEGREGATION (if more than one Funding Source or P.I.P. type)
☐ CCO FUNDED PER CONTRACT ☐ CCO FUNDED AS FOLLOWS

FEDERAL FUNDING SOURCE	PERCENT

ADA Notice: For individuals with sensory disabilities, this document is available in alternate formats. For information call: (916) 654-6410 or TDD (916) 654-3880 or write Records and Forms Management, 1120 N Street, MS-89, Sacramento, CA 95814.

STATE OF CALIFORNIA - DEPARTMENT OF TRANSPORTATION

CONTRACT CHANGE ORDER

Change Requested by: Engineer

CCO 140	Suppl. No. 2	Contract No. 04 - 0120R4	Road SF-80-12.6/13.2	FED. AID LOC.: ACBRIM-080-1(097)N

To: **CC MYERS INC**

You are directed to make the following changes from the plans and specifications or do the following described work not included in the plans and specifications for this contract. ***NOTE: This change order is not effective until approved by the Engineer.***

Description of work to be done, estimate of quantities and prices to be paid. (Segregate between additional work at contract price, agreed price and force account.) Unless otherwise stated, rates for rental of equipment cover only such time as equipment is actually used and no allowance will be made for idle time. This last percentage shown is the net accumulated increase or decrease from the original quantity in the Engineer's Estimate.

Extra Work at Lump Sum:

Incorporate the changes to the steel truss of the East Tie-In portion of the Temporary Bypass Structure (Bridge No. 34-0006 (TEMP)) as shown on revised plan Sheets 2 through 20 of this change order. All revisions to the truss shown on Sheets 2 through 20 of this change order shall supersede the original plan sheets issued under the original Change Order No. 140.

Any adjustments to compensation resulting from the revisions incorporated under this change order shall be deferred and addressed under a separate change order.

Total Cost of Extra Work at Agreed Lump Sum $0.00

RECEIVED
08 OCT 2011

Estimated Cost: Increase ☐ Decrease ☐ **$0.00**

By **reason of this order the time of completion will be adjusted as follows:** Deferred

Submitted by		
Signature	Resident Engineer BILL CASEY	Date 6-15-09
Approval Recommended by		
Signature	SFOBB Construction Manager MIKE FORNER	Date 6/17/09
Engineer Approval by		
Signature	SFOBB Construction Manager MIKE FORNER	Date 7/16/09

We the undersigned contractor, have given careful consideration to the change proposed and agree, if this proposal is approved, that we will provide all equipment, furnish the materials, except as may otherwise be noted above, and perform all services necessary for the work above specified, and will accept as full payment therefor the prices shown above.

NOTE: **If you, the contractor, do not sign acceptance of this order, your attention is directed to the requirements of the specifications as to proceeding with the ordered work and filing a written protest within the time therein specified.**

Contractor Acceptance by		
Signature	(Print name and title) STEVE FRANCIS, CHIEF ESTIMATOR	Date 7.3.09

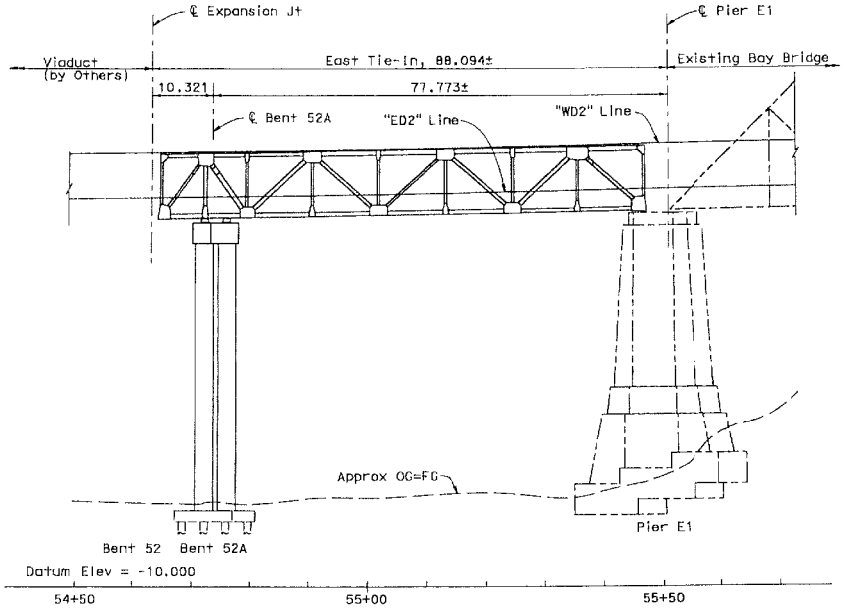

PROJECTED ELEVATION

1:400

Note: Longitudinal dimensions measured along "WD2" or "ED2" line. For clarity, north truss is not shown.

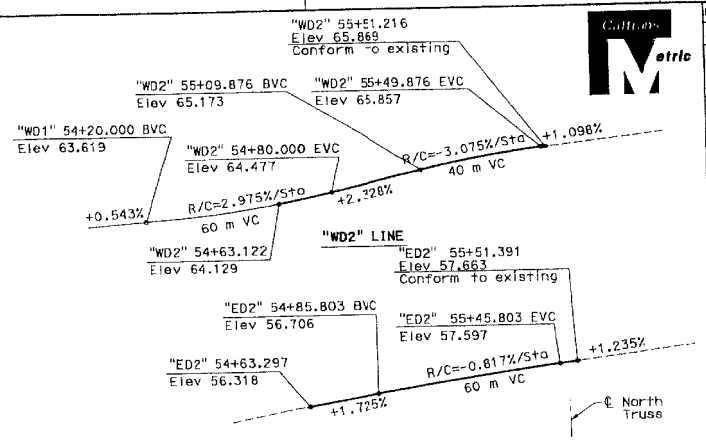

"ED2" LINE

PROFILE GRADE

NO SCALE

MARK	DATE	REVISIONS	BY	CH'D	CCO#
1	9/30/08	ELIMINATE DECK OVERLAY	MC	SA	

CONTRACT CHANGE ORDER NO. 140-S2
SHEET 2 OF 20

LEGEND:

- Indicates Existing Structure
- Indicates Bridge Removal
- Indicates Deck Drain
- Indicates Westbound Traffic
- Indicates Eastbound Traffic
- Indicates Minimum Clearance (See Note 3)

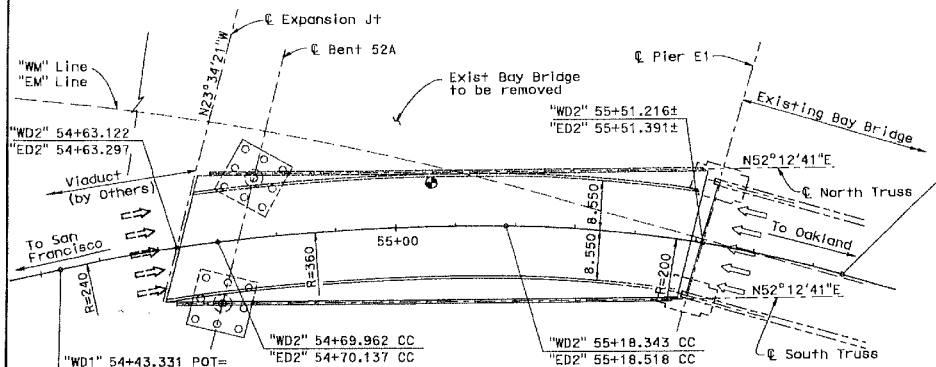

PLAN

1:400

"WD2" 55+75.148 EC=
"WD1" 55+75.755 POT
"ED2" 55+75.323 EC=
"ED1" 55+75.930 POT

Notes:

1. The Contractor shall verify all controlling field dimensions before ordering or fabricating any material.
2. For General Notes, Index to Caltrans Standard Plans, Pile Data Table, see "General Notes" sheets.
3. For section showing minimum clearance, see "Typical Section" sheet.

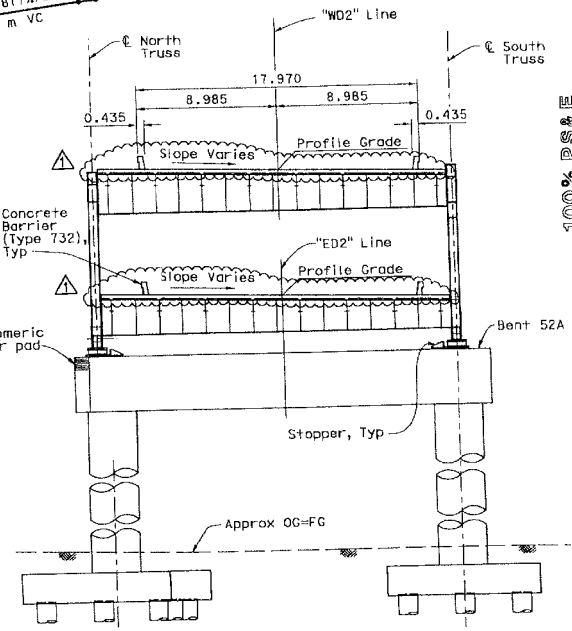

TYPICAL SECTION

1:150

Note: Dimensions measured perpendicular to "WD2" or "ED2" line.

ALL DIMENSIONS ARE IN METERS UNLESS OTHERWISE SHOWN

DIST	COUNTY	ROUTE	KILOMETER POST TOTAL PROJECT	SHEET No	TOTAL
04	SF	80	12.6/13.2		

REGISTERED CIVIL ENGINEER

4-7-08
PLANS APPROVAL DATE

The State of California or its officers or agents shall not be responsible for the accuracy or completeness of electronic copies of this plan sheet.

Registered Professional Engineer — Sajid Abbas — No. C 055274 — Exp. 12/31/09 — CIVIL — State of California

T.Y. LIN / MOFFATT & NICHOL
Two Harrison Street, Suite 500
San Francisco, CA 94105

T. Ostrom/M. Whiteside/A. Akinsanya	DESIGN	BY S. Abbas	CHECKED S. Cheng	LOAD FACTOR DESIGN	LIVE LOADING: HS20-44 AND ALTERNATIVE AND PERMIT DESIGN LOAD	PREPARED FOR THE STATE OF CALIFORNIA DEPARTMENT OF TRANSPORTATION	M. Sah PROJECT ENGINEER
DESIGN OVERSIGHT	DETAILS	BY S. Lee	CHECKED A. Lee	LAYOUT	BY CHECKED		S. Abbas PROJECT MANAGER
SIGN OFF DATE	QUANTITIES	BY H. Nelson	CHECKED A. Lee	SPECIFICATIONS	BY PLANS AND SPECS COMPARED		CU EA 0120R4

BRIDGE NO. 34-0006 (TEMP.)
KP (PM) 12.6

DESIGN GENERAL PLAN SHEET (METRIC) (REV. 8/1/06)
@DATE@ @TIME@ Pen Table File

ORIGINAL SCALE IN MILLIMETERS 0 10 20 30 40 50 60 70 80 90 100

DISREGARD PRINTS BEARING EARLIER REVISION DATES

REVISION DATES (PRELIMINARY STAGE ONLY)

FILE => p:\bb\04-012001\stl\revision to\caqpa01.dgn

SAN FRANCISCO OAKLAND BAY BRIDGE
EAST SPAN SEISMIC SAFETY PROJECT

EAST TIE-IN
GENERAL PLAN

SHEET 1R1 OF 214

100% PS&E

FILE => p:\bb\04-012001\stl\revision to\caqpa01.dgn
TIME PLOTTED => 11:15:15 AM
DATE PLOTTED => 10/7/2008
USERNAME => dstroo

DIST	COUNTY	ROUTE	KILOMETER POST TOTAL PROJECT	SHEET No	TOTAL
04	SF	BO	12.6/13.2		

Mark Chen
REGISTERED CIVIL ENGINEER

4-7-08
PLANS APPROVAL DATE

The State of California or its officers or agents shall not be responsible for the accuracy or completeness of electronic copies of this plan sheet.

REGISTERED PROFESSIONAL ENGINEER
Chi Mark Chen
No. C 40582
Exp. 03/31/09
CIVIL
STATE OF CALIFORNIA

T.Y. LIN / MOFFATT & NICHOL
Two Harrison Street, Suite 500
San Francisco, CA 94105

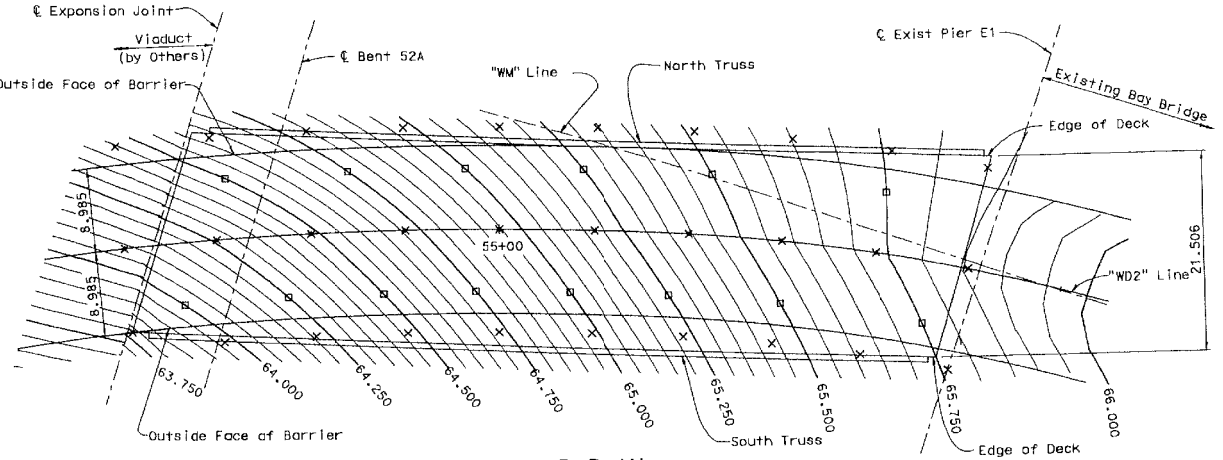

WESTBOUND CONTOUR PLAN
1:250

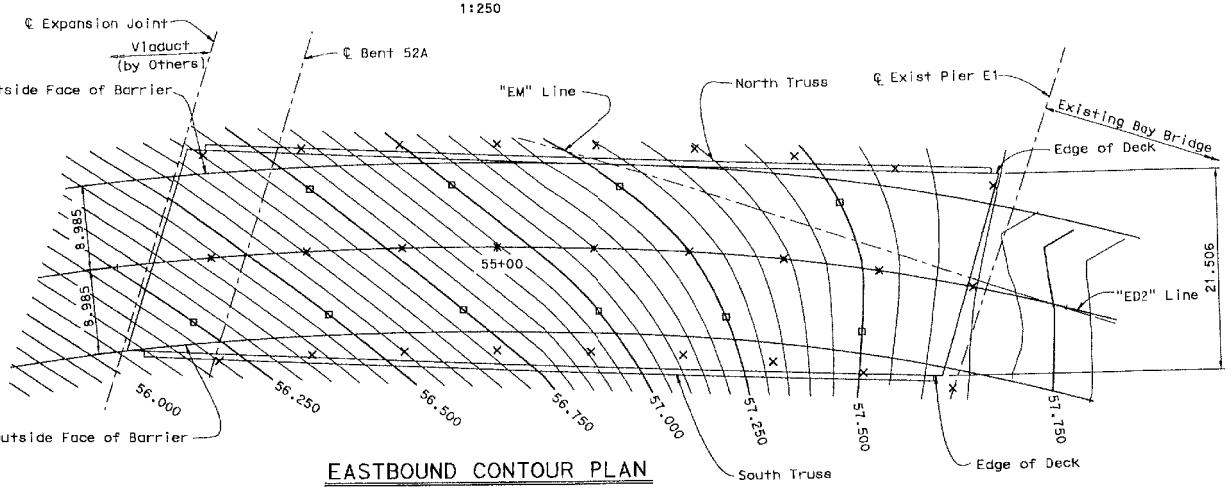

EASTBOUND CONTOUR PLAN
1:250

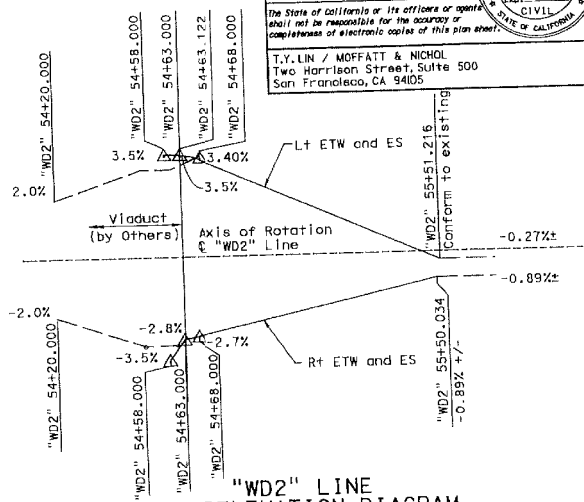

"WD2" LINE SUPERELEVATION DIAGRAM
No Scale

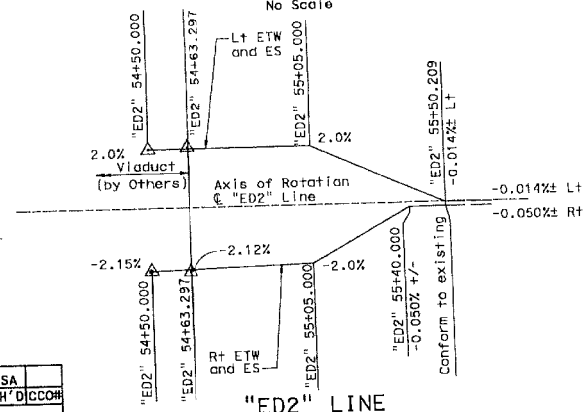

"ED2" LINE SUPERELEVATION DIAGRAM
No Scale

Notes:

1. Contours do not include camber.
2. Contour interval is 50 mm.
3. Contours are shown for top of concrete deck elevation for the East Tie-In contract. ⚠1
4. The Contractor shall verify all controlling field dimensions before ordering or fabricating any material.

LEGEND:

□ - Indicates 250 mm contours
× = 10 m intervals along station line

MARK	DATE	DESCRIPTIONS	BY	CH'D	CCO#
1	9/30/08	ELIMINATE DECK OVERLAY	MC	SA	

REVISIONS

CONTRACT CHANGE ORDER NO. 140-S2
SHEET 3 OF 20

ALL DIMENSIONS ARE IN METERS UNLESS OTHERWISE SHOWN

SAN FRANCISCO OAKLAND BAY BRIDGE
EAST SPAN SEISMIC SAFETY PROJECT

EAST TIE-IN
DECK CONTOURS

T. Ostrom/M. Whiteside/A. Akinsanya
DESIGN OVERSIGHT
SIGN OFF DATE

	BY	CHECKED
DESIGN	M. Chen, P. Chou	S. Cheng, H. Najm
DETAILS	S. Lee	A. Lee
QUANTITIES	H. Nelson	A. Lee

PREPARED FOR THE STATE OF CALIFORNIA DEPARTMENT OF TRANSPORTATION

M. Sah
PROJECT ENGINEER
S. Abbas
PROJECT MANAGER

BRIDGE NO. 34-0006 (TEMP)
KILOMETER POST 12.6

CU
EA 0120R4

DISREGARD PRINTS BEARING EARLIER REVISION DATES

REVISION DATES (PRELIMINARY STAGE ONLY)

SHEET 5R1 OF 214

DESIGN DETAIL SHEET (METRIC) (REV. 3/1/98)
DATE TIME Pen Table File

ORIGINAL SCALE IN MILLIMETERS FOR REDUCED PLANS 0 10 20 30 40 50 60 70 80 90 100

FILE => p:\bb\04-012001\eti\revision 1a\abdkc01.dgn

100% PS&E

FILE => p:\bb\04-012001\eti\revision 1a\abdkc01.dgn
TIME PLOTTED => 11:15:32 AM
DATE PLOTTED => 10/7/2008
USERNAME => pzhao

DIST	COUNTY	ROUTE	KILOMETER POST TOTAL PROJECT	SHEET No	TOTAL
04	SF	80	12.6/13.2		

Sajid Abbas
REGISTERED CIVIL ENGINEER

4-7-08
PLANS APPROVAL DATE

REGISTERED PROFESSIONAL ENGINEER
Sajid Abbas
No. C 055274
Exp. 12/31/09
CIVIL
STATE OF CALIFORNIA

The State of California or its officers or agents shall not be responsible for the accuracy or completeness of electronic copies of this plan sheet.

T.Y. LIN / MOFFATT & NICHOL
Two Harrison Street, Suite 500
San Francisco, CA 94105

Caltrans Metric

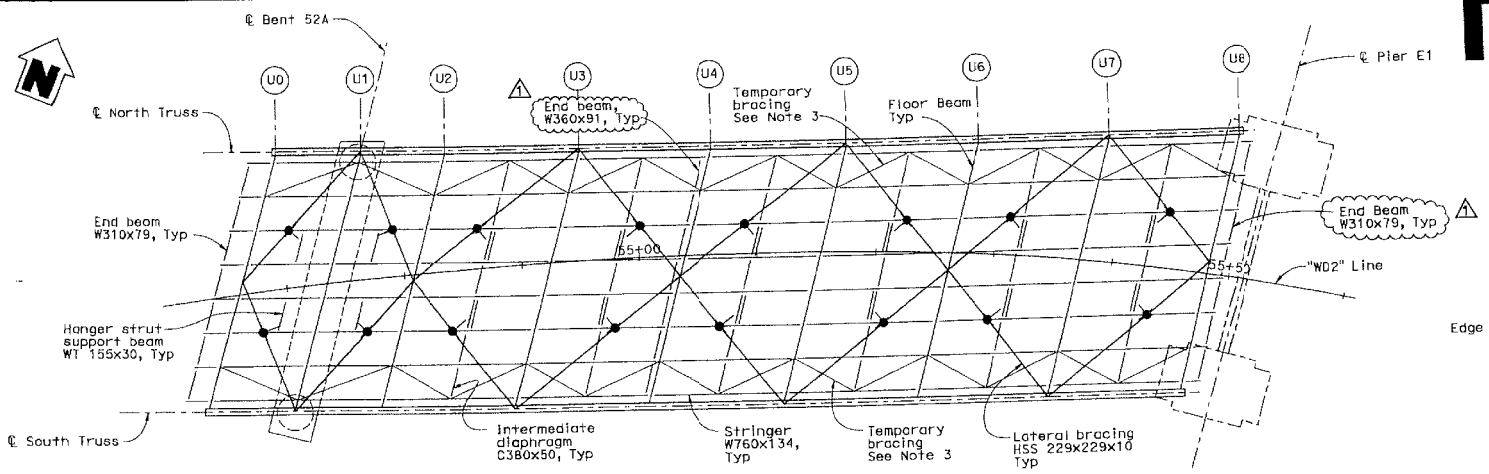

UPPER DECK PLAN
1:200

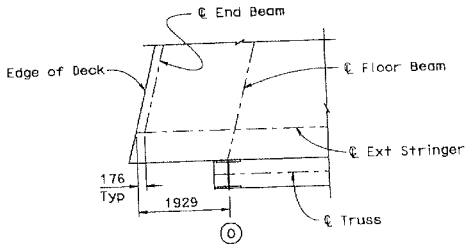

Note: West end of South Truss shown, other locations similar.

DETAIL 2
1:50

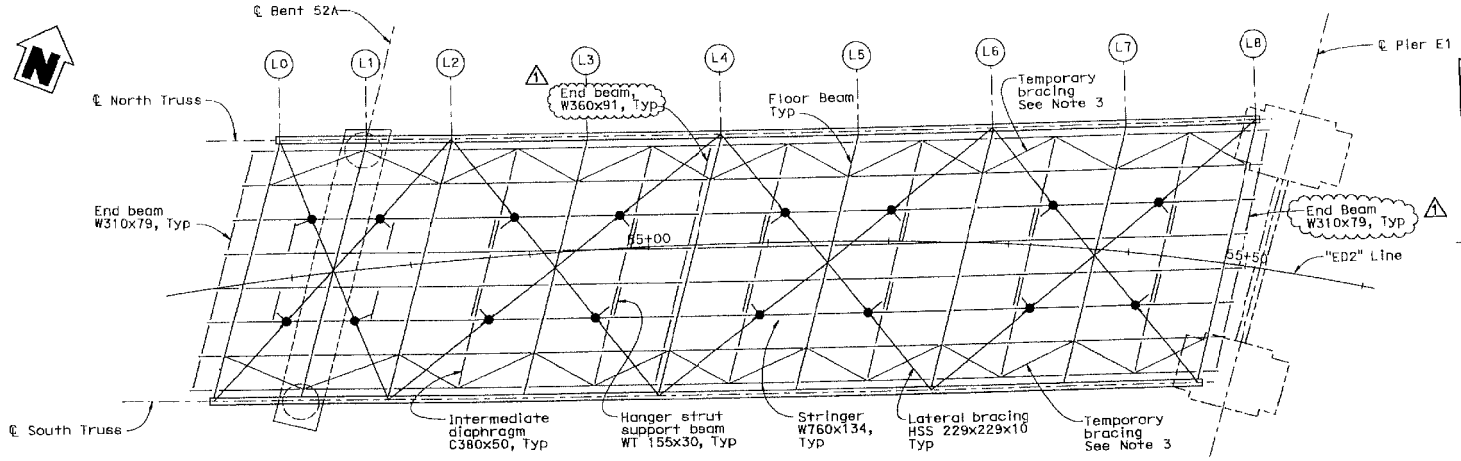

LOWER DECK PLAN
1:200

MARK	DATE	DESCRIPTIONS	BY	CH'D	CCO#
1	9/30/08	ELIMINATE DECK OVERLAY	MC	SA	

REVISIONS

CONTRACT CHANGE ORDER NO. 140-S2
SHEET 4 OF 20

LEGEND:

(X) Indicates floor beam number (Upper & Lower Deck)
- - - - Indicates Existing Structure
● Indicates Hanger Strut Location

Notes:

1. For floor beam type and details, see "Typical Section" sheet and "Floor Beam Details" sheets.
2. For lateral bracing hanger strut details, see "Lateral Bracing Details No. 8" sheet.
3. Contractor shall provide temporary bracing during concrete deck casting. Minimum one pair each between all floor beams in the north and south Stringer bays.

ALL DIMENSIONS ARE IN MILLIMETERS UNLESS OTHERWISE SHOWN

SAN FRANCISCO OAKLAND BAY BRIDGE
EAST SPAN SEISMIC SAFETY PROJECT

EAST TIE-IN

FRAMING PLAN NO. 2

T. Ostrom/M. Whiteside/A. Akinsanya
DESIGN OVERSIGHT

SIGN OFF DATE

DESIGN DETAIL SHEET (METRIC) (REV. 3/1/99)
●DATE● ●TIME● Pen Table File

	BY	CHECKED
DESIGN	S. Abbas, M. Soh, C. Redfield	S. Cheng, H. Najm
DETAILS	A. Sudhausen, S. Lee	M. Irwin, A. Lee
QUANTITIES	H. Nelson	A. Lee

PREPARED FOR THE STATE OF CALIFORNIA DEPARTMENT OF TRANSPORTATION

M. Soh
PROJECT ENGINEER
S. Abbas
PROJECT MANAGER

BRIDGE NO. 34-0006 (TEMP)
KILOMETER POST 12.6

CU
EA 0'20R4

ORIGINAL SCALE IN MILLIMETERS FOR REDUCED PLANS 0 10 20 30 40 50 60 70 80 90 100

DISREGARD PRINTS BEARING EARLIER REVISION DATES

REVISION DATES (PRELIMINARY STAGE ONLY) 11/30/01 4/9/08 9/30/08

SHEET 28R1 OF 214

FILE => p:\bb\04-012001\etl\revision 1a\affrp02.dgn

100% PS&E

FILE => p:\bb\04-012001\etl\revision 1a\affrp02.dgn
TIME PLOTTED => 11:15:47 AM
DATE PLOTTED => 10/7/2008
USERNAME => pzhao

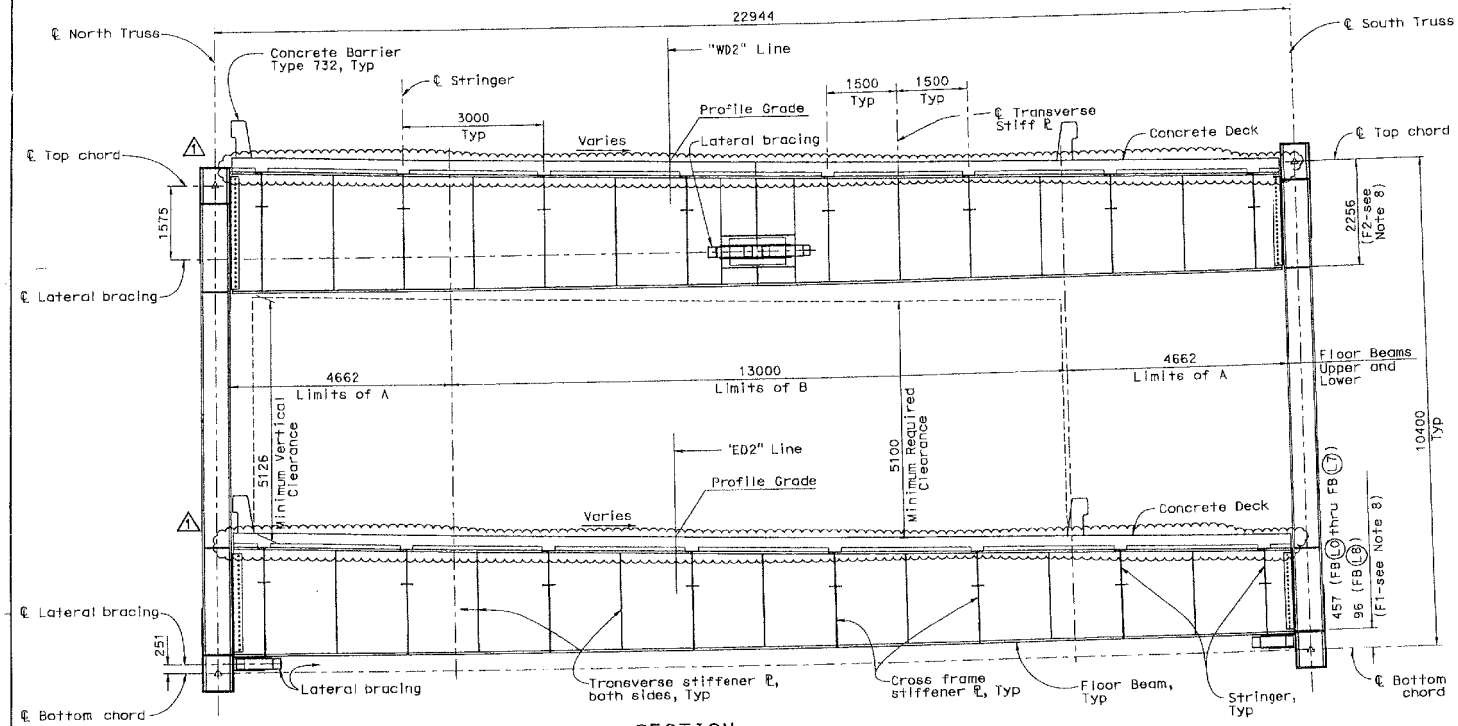

SECTION

1:50

Section along Floor Beam (U4) and (L4) shown

Horizontal dimensions are parallel to floor beam

Floor Beam Dimensions (mm)

Floor Beam No.	Web d N. end	Web d S. end	Web t_w	A Flanges b_f	A Flanges t_f	B Flanges Top b_f	B Flanges Top t_f	B Flanges Bottom b_f	B Flanges Bottom t_f
(U0)	2410	1600	16	400	51	400	51	500	51
(U1)	2404	1648	2-19	664	51	664	51	664	51
(U2)	2415	1701	16	400	51	400	51	500	51
(U3)	2453	1821	16	400	51	400	51	500	51
(U4)	2505	1961	16	400	51	400	51	500	51
(U5)	2557	2110	16	400	51	400	51	500	51
(U6)	2573	2239	16	400	51	400	51	500	51
(U7)	2550	2333	16	400	51	400	51	500	51
(U8)	2481	2385	2-19	664	51	664	51	664	51
(L0)	2123	1553	16	400	51	400	51	500	51
(L1)	2130	1569	2-16	664	51	664	51	664	51
(L2)	2141	1582	16	400	51	400	51	500	51
(L3)	2159	1613	16	400	51	400	51	500	51
(L4)	2169	1647	16	400	51	400	51	500	51
(L5)	2138	1725	16	400	51	400	51	500	51
(L6)	2099	1830	16	400	51	400	51	500	51
(L7)	2050	1924	16	400	51	400	51	500	51
(L8)	2342	2310	2-25	1000	51	1000	51	1000	51

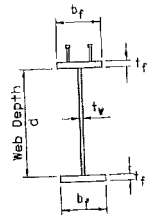

TYPICAL FLOOR BEAM SECTION

No Scale

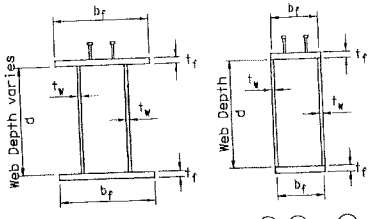

BOX FLOOR BEAM SECTION

No Scale

MARK	DATE	REVISIONS	BY	CH'D	CCO#
1	9/30/08	ELIMINATE DECK OVERLAY	MC	SA	

CONTRACT CHANGE ORDER NO. 140-S2

SHEET 5 OF 20

Notes:

1. For floor beam details, see "Floor Beam Details" sheets.
2. For lateral bracing, see "Lateral Bracing Layout" sheets.
3. For concrete deck details, see "Concrete Deck Details" sheets.
4. For stringer details, see "Stringer Details" sheets.
5. All dimensions are measured along the centerline of the floor beam unless noted otherwise.
6. For additional dimensions, see "Framing Plan", "Truss Layout" and "General Plan" sheets.
7. For truss top & bottom chord centerline elevations, see "Framing Plan No. 1" sheet.
8. Dimension F1 and F2 are measured vertically from the centerline truss chord to the floor beam work point, see Detail 1 on "Framing Plan No. 1" sheet.

ALL DIMENSIONS ARE IN MILLIMETERS UNLESS OTHERWISE SHOWN

DIST	COUNTY	ROUTE	KILOMETER POST TOTAL PROJECT	SHEET No	TOTAL
04	SF	80	12.6/13.2		

REGISTERED CIVIL ENGINEER

4-7-08

PLANS APPROVAL DATE

The State of California or its officers or agents shall not be responsible for the accuracy or completeness of electronic copies of this plan sheet.

REGISTERED PROFESSIONAL ENGINEER — Sajid Abbas — No. C 055274 — Exp. 12/31/09 — CIVIL — STATE OF CALIFORNIA

T.Y. LIN / MOFFATT & NICHOL
Two Harrison Street, Suite 500
San Francisco, CA 94105

SAN FRANCISCO OAKLAND BAY BRIDGE
EAST SPAN SEISMIC SAFETY PROJECT

EAST TIE-IN

TYPICAL SECTION

DESIGN	BY S. Abbas, W. Soh, C. Redfield	CHECKED S. Cheng, H. Najm	
DETAILS	BY A. Sudhausen, S. Lee	CHECKED M. Irwin, A. Lee	
QUANTITIES	BY H. Nelson	CHECKED A. Lee	

PREPARED FOR THE STATE OF CALIFORNIA DEPARTMENT OF TRANSPORTATION

W. Soh, PROJECT ENGINEER
S. Abbas, PROJECT MANAGER

BRIDGE NO. 34-0006 (TEMP)
KILOMETER POST 12.6

CU 0120R4

DISREGARD PRINTS BEARING EARLIER REVISION DATES

REVISION DATES (PRELIMINARY STAGE ONLY)

SHEET 29R1 OF 214

T. Ostrom/M. Whiteside/A. Akinsanya
DESIGN OVERSIGHT

SIGN OFF DATE

DESIGN DETAIL SHEET (METRIC) (REV. 3/1/06)
◆DATE◆ ◆TIME◆ Pen Table File

ORIGINAL SCALE IN MILLIMETERS FOR REDUCED PLANS 0 10 20 30 40 50 60 70 80 90 100

FILE => p:\bb\04-012001\etl\revision ta\offtyp01.dgn

100% PS&E

FILE => p:\bb\04-012001\etl\revision ta\offtyp01.dgn
TIME PLOTTED => 11:15:58 AM
DATE PLOTTED => 10/7/2008
USERNAME => pzhou

DIST	COUNTY	ROUTE	KILOMETER POST TOTAL PROJECT	SHEET No	TOTAL
04	SF	80	12.6/13.2		

Mark Chen
REGISTERED CIVIL ENGINEER

4-7-08
PLANS APPROVAL DATE

REGISTERED PROFESSIONAL ENGINEER
Chi Mark Chen
No. C 40582
Exp. 03/31/09
CIVIL
STATE OF CALIFORNIA

The State of California or its officers or agents shall not be responsible for the accuracy or completeness of electronic copies of this plan sheet.

T.Y. LIN / MOFFATT & NICHOL
Two Harrison Street, Suite 500
San Francisco, CA 94105

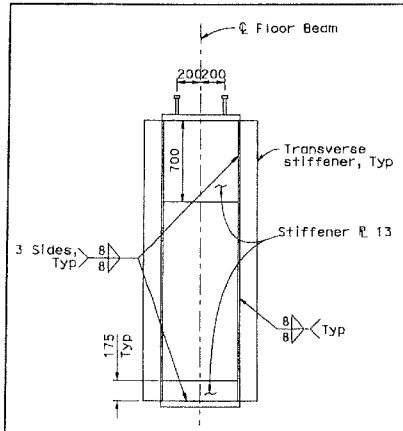

SECTION A-A
1:20

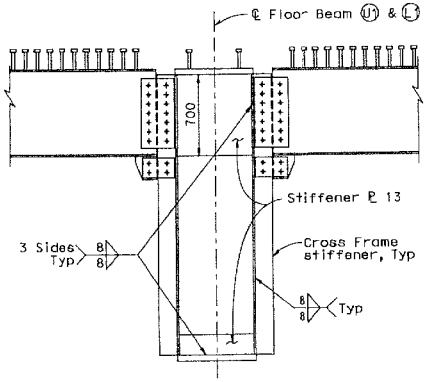

FLOOR BEAM U1, L1

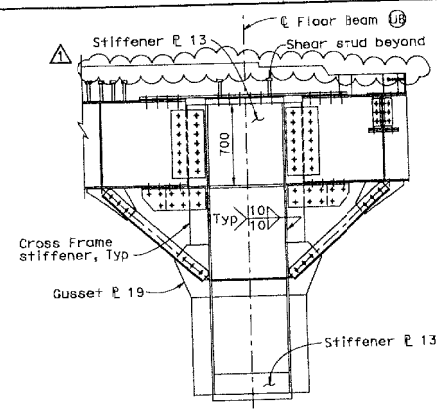

FLOOR BEAM U8

SECTION B-B
1:20

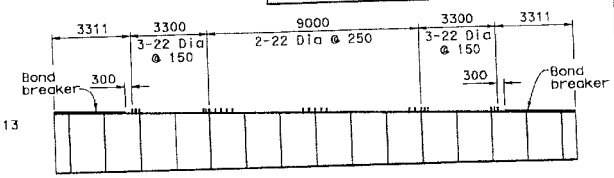

FLOOR BEAM SHEAR STUD SPACING DIAGRAM
No Scale

Notes:

1. See "Floor Beam Details No. 1" for typical floor beam notes.
2. For stringer connection details, see "Stinger Details" sheets.
3. For floor beam connection to truss, see "Truss Joint Details" sheets.
4. For limits and spacing of floor beam shear studs and limits of bond breaker, see " Floor Beam Shear Stud Spacing Diagram".
5. Where weld contacts gusset plate or any connection plate, the surface of weld shall be ground flush. △1
6. For man hole and hand hole details, see "Man Hole & Hand Hole Details" sheet.
7. Lateral bracing brackets not shown for clarity. For stiffener configuration required at lateral bracing bracket connections, see "Lateral Bracing Layout" & "Lateral Bracing Details" sheets.

MARK	DATE	DESCRIPTIONS	BY	CH'D	CCO#
△1	9/30/08	ELIMINATE DECK OVERLAY & REVISE NOTE	MC	SA	

REVISIONS

CONTRACT CHANGE ORDER NO. 140-S2
SHEET 6 OF 20

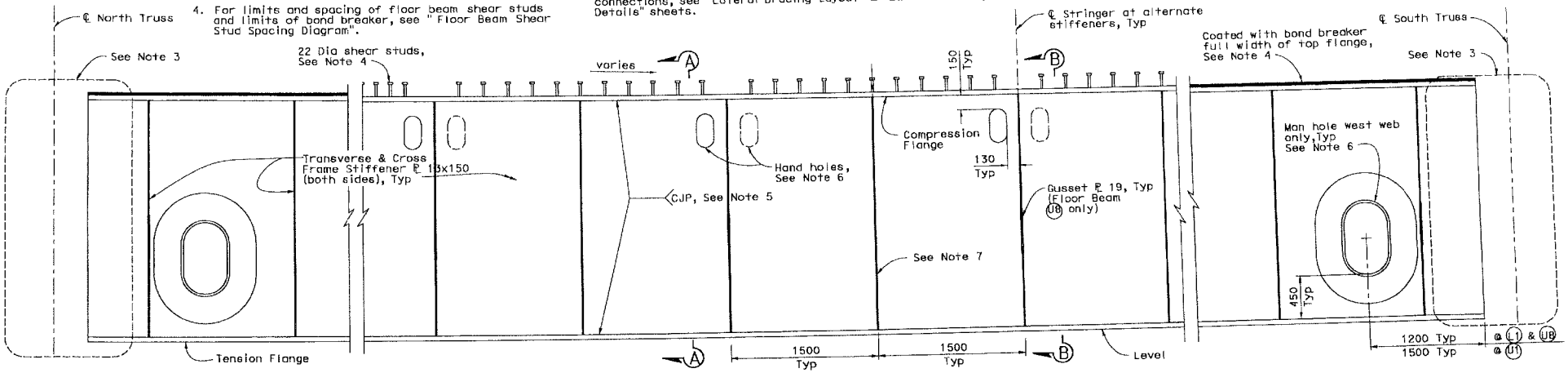

FLOOR BEAM U1, L1, U8 (Floor Beam U8 shown, U1 & L1 similar)
1:20

ALL DIMENSIONS ARE IN MILLIMETERS UNLESS OTHERWISE SHOWN

SAN FRANCISCO OAKLAND BAY BRIDGE
EAST SPAN SEISMIC SAFETY PROJECT

EAST TIE-IN

FLOOR BEAM DETAILS NO. 3

T. Ostrom/M. Whiteside/A. Akinsanya
DESIGN OVERSIGHT

SIGN OFF DATE

DESIGN DETAIL SHEET (METRIC) (REV. 3/1/08)
●DATE● ●TIME● Pen Table File

	BY	CHECKED
DESIGN	M. Chen, K. Liu	S. Cheng, H. Najm, H. Nelson
DETAILS	S. Lee	M. Irwin, A. Lee
QUANTITIES	H. Nelson	A. Lee

ORIGINAL SCALE IN MILLIMETERS FOR REDUCED PLANS 0 10 20 30 40 50 60 70 80 90 100

PREPARED FOR THE STATE OF CALIFORNIA DEPARTMENT OF TRANSPORTATION

M. Sah
PROJECT ENGINEER
S. Abbas
PROJECT MANAGER
CU
EA 0120R4

BRIDGE NO. 34-0006 (TEMP)
KILOMETER POST 12.6

DISREGARD PRINTS BEARING EARLIER REVISION DATES

REVISION DATES (PRELIMINARY STAGE ONLY)

SHEET 60R1 OF 214

FILE => p:\bb\04-012001\eti\revision 1a\akfbd03.dgn

100% PS&E

FILE => p:\bb\04-012001\eti\revision 1a\akfbd03.dgn
TIME PLOTTED => 11:16:14 AM
DATE PLOTTED => 10/7/2008
USERNAME => p2hao

MARK	DATE	REVISIONS	BY	CH'D	CCO#
1	9/30/08	ELIMINATE DECK OVERLAY	MC	SA	

CONTRACT CHANGE ORDER NO. 140-S2
SHEET 7 OF 20

DIST	COUNTY	ROUTE	KILOMETER POST TOTAL PROJECT	SHEET No	TOTAL
04	SF	80	12.6/13.2		

Mark Chen
REGISTERED CIVIL ENGINEER
4-7-08
PLANS APPROVAL DATE
The State of California or its officers or agents shall not be responsible for the accuracy or completeness of electronic copies of this plan sheet.

REGISTERED PROFESSIONAL ENGINEER — Phi Mark Chen — No. C 40582 — Exp. 03/31/09 — CIVIL — STATE OF CALIFORNIA

T.Y. LIN / MOFFATT & NICHOL
Two Harrison Street, Suite 500
San Francisco, CA 94105

Caltrans Metric

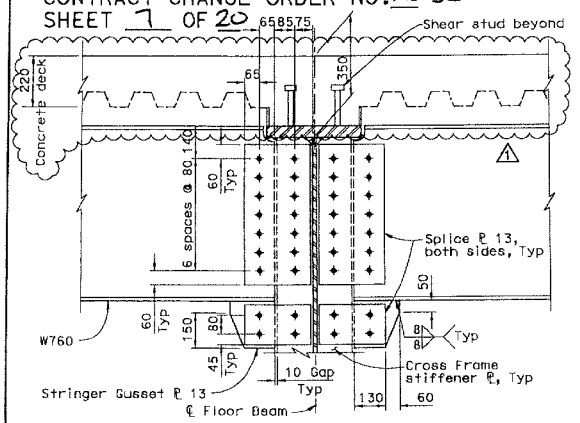

ELEVATION (Floor Beam (U2),(L2),(U3),(L3), (U5),(L5),(U6),(L6),(U7),(L7))*
1:10

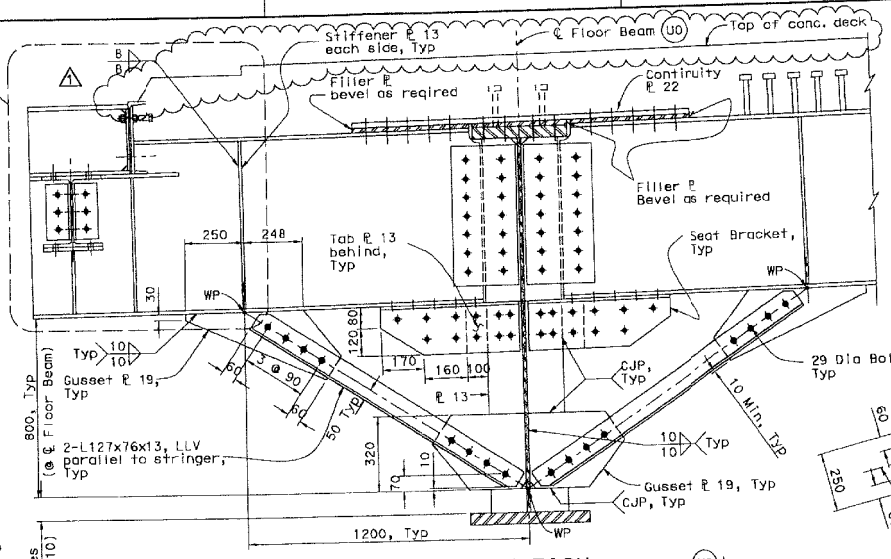

ELEVATION (Floor Beam (U0))
1:10

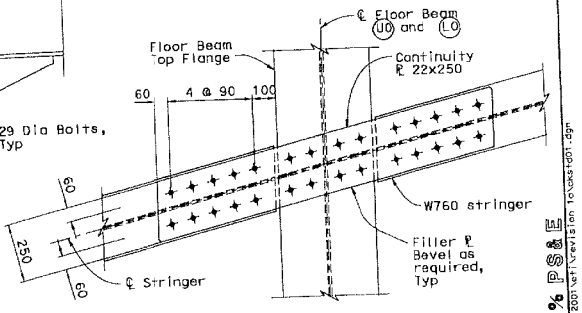

CONTINUITY PLATE-PLAN
1:10

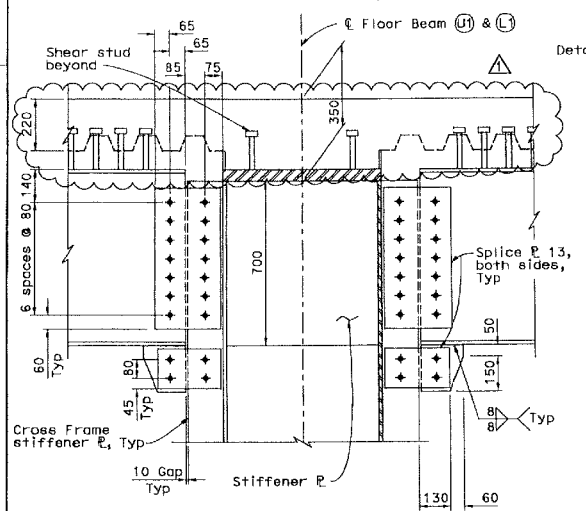

ELEVATION (Floor Beam (U1) & (L1))*
1:10
* For exterior stringers next to North and South Truss, see "Stringer Details No. 4" sheet

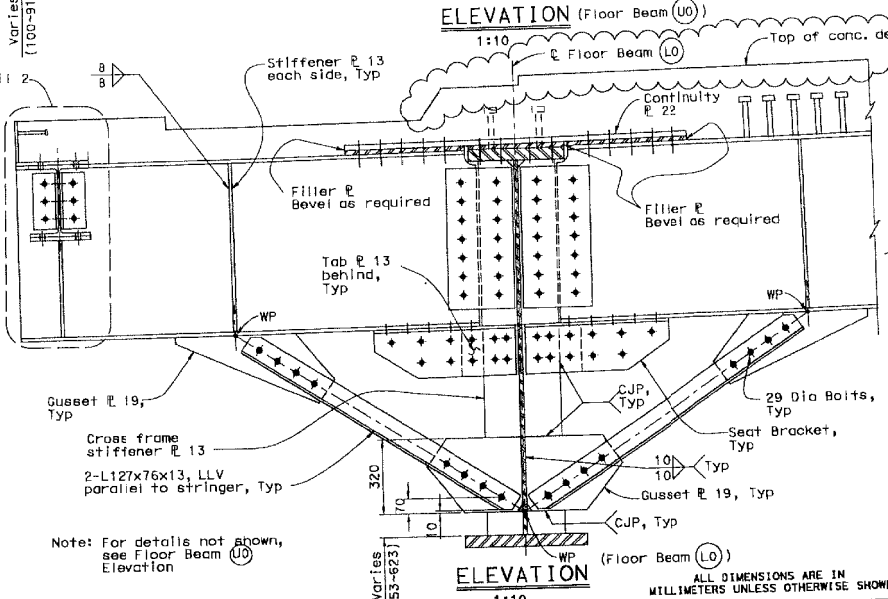

Note: For details not shown, see Floor Beam (U0) Elevation

ELEVATION (Floor Beam (L0))
1:10

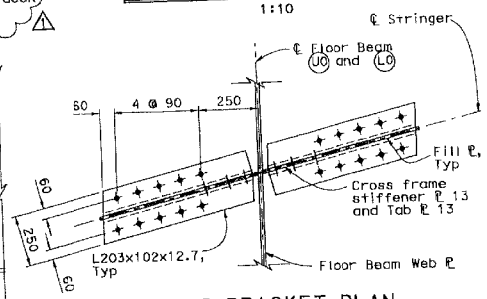

SEAT BRACKET-PLAN
1:10

Notes:
1. All bolts for stringers shall be 25 Dia A490, unless noted otherwise. For hole size, minimum spacing, edge and end distances, see "General Notes No. 2" sheet, unless noted otherwise.
2. Unless otherwise shown dimensions are parallel to ℄ stringer.
3. For Detail 1 and Detail 2, see "Stringer Details No. 5" sheet.

ALL DIMENSIONS ARE IN MILLIMETERS UNLESS OTHERWISE SHOWN

SAN FRANCISCO OAKLAND BAY BRIDGE
EAST SPAN SEISMIC SAFETY PROJECT
EAST TIE-IN
STRINGER DETAILS NO. 1

T. Ostrom/M. Whiteside/A. Akinsanya	DESIGN	W. Chen, K. Liu	S. Cheng, H. Naje, H. Nelson
DESIGN OVERSIGHT	DETAILS	S. Lee	W. Irwin, A. Lee
SIGN OFF DATE	QUANTITIES	H. Nelson	A. Lee

PREPARED FOR THE STATE OF CALIFORNIA
DEPARTMENT OF TRANSPORTATION

M. Soh — PROJECT ENGINEER
S. Abbe — PROJECT MANAGER
CU EA 0120R4

BRIDGE NO. 34-0006 (TEMP)
KILOMETER POST 12.6

DISREGARD PRINTS BEARING EARLIER REVISION DATES → 11/4/08 | 3/3/08 | 9/30/08

SHEET 61R1 | OF 214

DESIGN DETAIL SHEET (METRIC) (REV. 3/1/99)
@DATE@ @TIME@ Pen Table File

ORIGINAL SCALE IN MILLIMETERS FOR REDUCED PLANS 0 10 20 30 40 50 60 70 80 90 100

FILE => p:\bb\04-012001\etl\revision to\oketd01.dgn

USERNAME => dzhao
DATE PLOTTED => 10/7/2008
TIME PLOTTED => 11:16:19 AM
100% PS&E

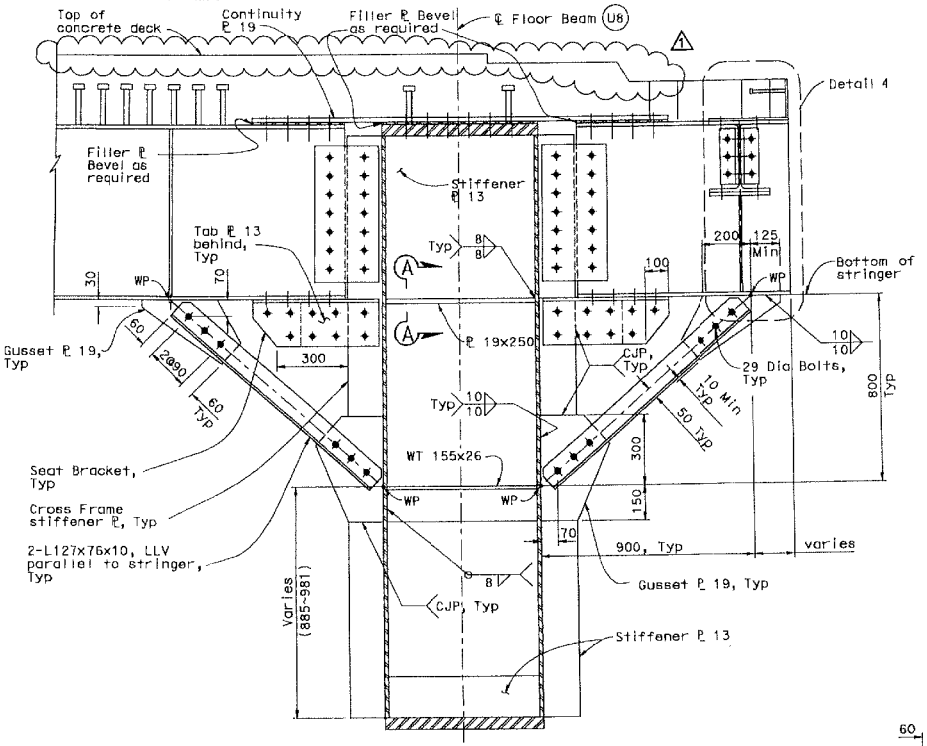

ELEVATION (Floor Beam (U8))
1:10

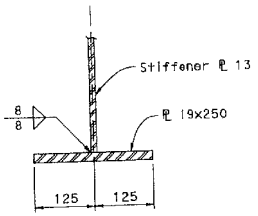

SECTION A-A
1:5

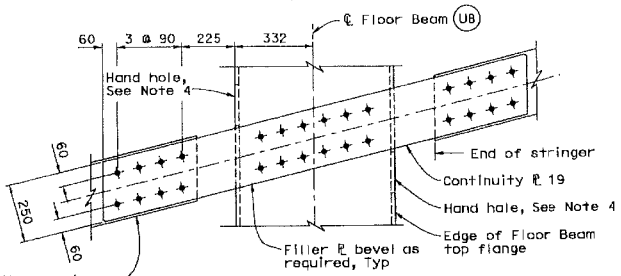

CONTINUITY PLATE-PLAN
1:10

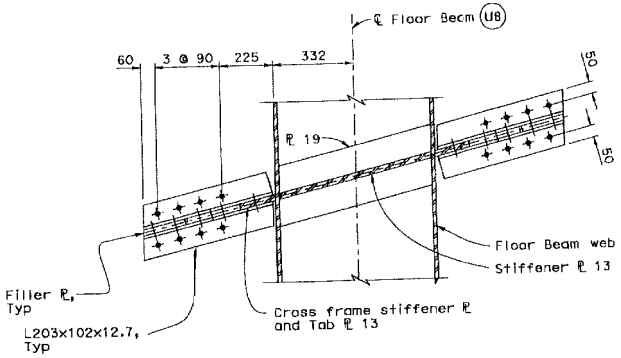

SEAT BRACKET-PLAN
1:10

DIST	COUNTY	ROUTE	KILOMETER POST TOTAL PROJECT	SHEET No	TOTAL
04	SF	80	12.6/13.2		

Mark Chen
REGISTERED CIVIL ENGINEER
4-7-08
PLANS APPROVAL DATE

The State of California or its officers or agents shall not be responsible for the accuracy or completeness of electronic copies of this plan sheet.

REGISTERED PROFESSIONAL ENGINEER
Chi Mark Chen
No. C 40582
Exp. 03/31/09
CIVIL
STATE OF CALIFORNIA

T.Y. LIN / MOFFATT & NICHOL
Two Harrison Street, Suite 500
San Francisco, CA 94105

MARK	DATE	DESCRIPTIONS	BY	CH'D	CCO#
1	9/30/08	ELIMINATE DECK OVERLAY	MC	SA	

REVISIONS

CONTRACT CHANGE ORDER NO. 140-S2
SHEET 8 OF 20

Notes:

1. All bolts for stringers shall be 25 Dia A490, unless noted otherwise. For hole size, minimum spacing, edge and end distances, see "General Notes No. 2" sheet, unless noted otherwise.
2. Unless otherwise shown dimensions are parallel to ℄ stringer.
3. For Detail 4, see "Stringer Details No. 6" sheet.
4. For hand hole details, see "Man Hole & Hand Hole Details" sheet.

ALL DIMENSIONS ARE IN MILLIMETERS UNLESS OTHERWISE SHOWN

SAN FRANCISCO OAKLAND BAY BRIDGE
EAST SPAN SEISMIC SAFETY PROJECT

EAST TIE-IN

STRINGER DETAILS NO. 2

T. Ostrom/M. Whiteside/A. Akinsanya
DESIGN OVERSIGHT
SIGN OFF DATE

DESIGN DETAIL SHEET (METRIC) (REV. 3/1/98)
●DATE● ●TIME● Pen Table File

	BY	CHECKED
DESIGN	M. Chen, K. Liu	S. Cheng, N. Kajn, H. Nelson
DETAILS	S. Lee	M. Irwin, A. Lee
QUANTITIES	H. Nelson	A. Lee

PREPARED FOR THE STATE OF CALIFORNIA DEPARTMENT OF TRANSPORTATION

ORIGINAL SCALE IN MILLIMETERS FOR REDUCED PLANS 0 10 20 30 40 50 60 70 80 90 100

M. Sah
PROJECT ENGINEER
S. Abbas
PROJECT MANAGER

BRIDGE NO. 34-0006 (TEMP)
KILOMETER POST 12.6

CU
EA 0120R4

DISREGARD PRINTS BEARING EARLIER REVISION DATES

REVISION DATES (PRELIMINARY STAGE ONLY) 11/8/07 4/7/08 9/30/08

SHEET 62R1 OF 214

FILE => p:\bb\04-012001\eti\revision 1a\akstd02.dgn

100% PS&E

FILE => p:\bb\04-012001\eti\revision 1a\akstd02.dgn
TIME PLOTTED => 11:16:28 AM
DATE PLOTTED => 10/7/2008
USERNAME => pzhao

DIST	COUNTY	ROUTE	KILOMETER POST TOTAL PROJECT	SHEET No	TOTAL
04	SF	80	12.6/13.2		

Mark Chen
REGISTERED CIVIL ENGINEER

4-7-08
PLANS APPROVAL DATE

The State of California or its officers or agents shall not be responsible for the accuracy or completeness of electronic copies of this plan sheet.

REGISTERED PROFESSIONAL ENGINEER
Chi Mark Chen
No. C 40582
Exp. 03/31/09
CIVIL
STATE OF CALIFORNIA

T.Y. LIN / MOFFATT & NICHOL
Two Harrison Street, Suite 500
San Francisco, CA 94105

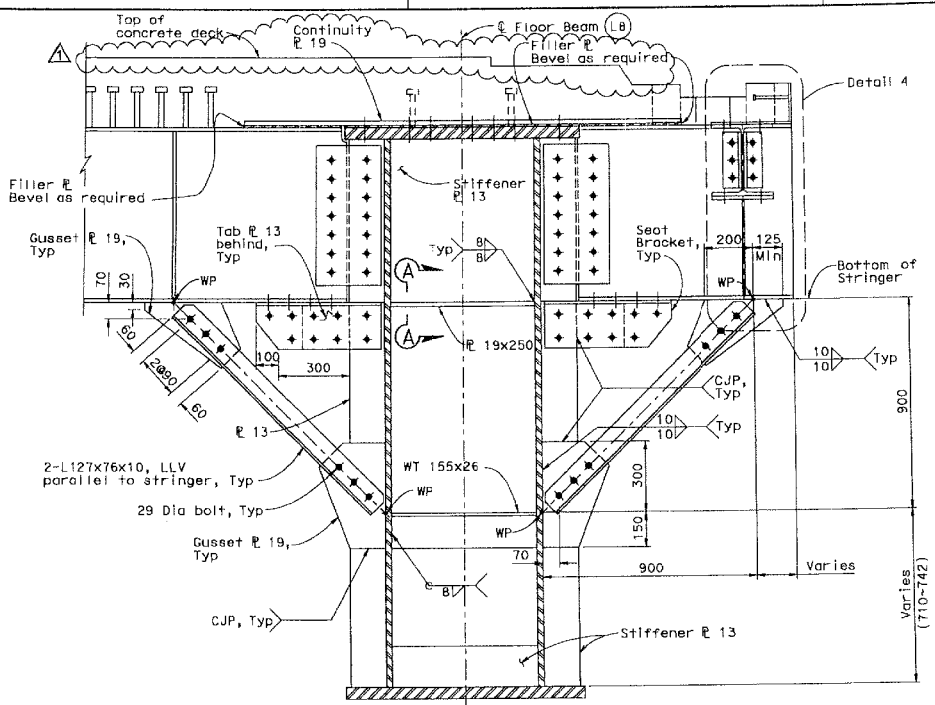

ELEVATION (Floor Beam (L8))
1:10

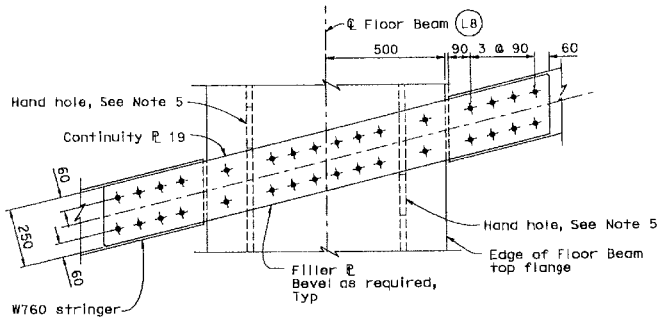

CONTINUITY PLATE-PLAN
1:10

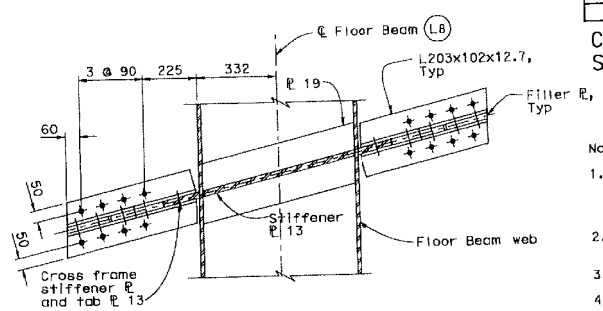

SEAT BRACKET-PLAN
1:10

MARK	DATE	DESCRIPTIONS	BY	CH'D	CCO#
1	9/30/08	ELIMINATE DECK OVERLAY	MC	SA	

REVISIONS

CONTRACT CHANGE ORDER NO. 140-S2
SHEET 9 OF 20

Notes:

1. All bolts for stringers shall be 25 Dia A490, unless noted otherwise. For hole size, minimum spacing, edge and end distances, see "General Notes No. 2" sheet, unless noted otherwise.
2. Unless otherwise shown dimensions are parallel to ℄ stringer.
3. For Detail 4, see "Stringer Details No. 6" sheet.
4. For Section A-A, see "Stringer Details No. 2" sheet.
5. For hand hole details, see "Man Hole & Hand Hole Details" sheet.

ALL DIMENSIONS ARE IN MILLIMETERS UNLESS OTHERWISE SHOWN

SAN FRANCISCO OAKLAND BAY BRIDGE
EAST SPAN SEISMIC SAFETY PROJECT

EAST TIE-IN

STRINGER DETAILS NO. 3

T. Ostrom/M. Whiteside/A. Akinsanya
DESIGN OVERSIGHT

SIGN OFF DATE

DESIGN DETAIL SHEET (METRIC) (REV. 3/1/98)
@DATE@ @TIME@ Pen Table File

	BY	CHECKED
DESIGN	M. Chen, K. Liu	S. Cheng, H. Najs, H. Nelson
DETAILS	S. Lee	M. Irwin, A. Lee
QUANTITIES	H. Nelson	A. Lee

PREPARED FOR THE STATE OF CALIFORNIA DEPARTMENT OF TRANSPORTATION

ORIGINAL SCALE IN MILLIMETERS FOR REDUCED PLANS 0 10 20 30 40 50 60 70 80 90 100

M. Sah
PROJECT ENGINEER
S. Abbas
PROJECT MANAGER

CU
EA 0120R4

BRIDGE NO. 34-0006 (TEMP)
KILOMETER POST 12.6

DISREGARD PRINTS BEARING EARLIER REVISION DATES

REVISION DATES (PRELIMINARY STAGE ONLY)

SHEET 63R1 OF 214

FILE => p:\bb\04-012001\eti\revision 1a\aksfd03.dgn

100% PS&E

FILE => p:\bb\04-012001\eti\revision 1a\aksfd03.dgn
TIME PLOTTED => 11:16:27 AM
DATE PLOTTED => 10/7/2008
USERNAME => p2hao

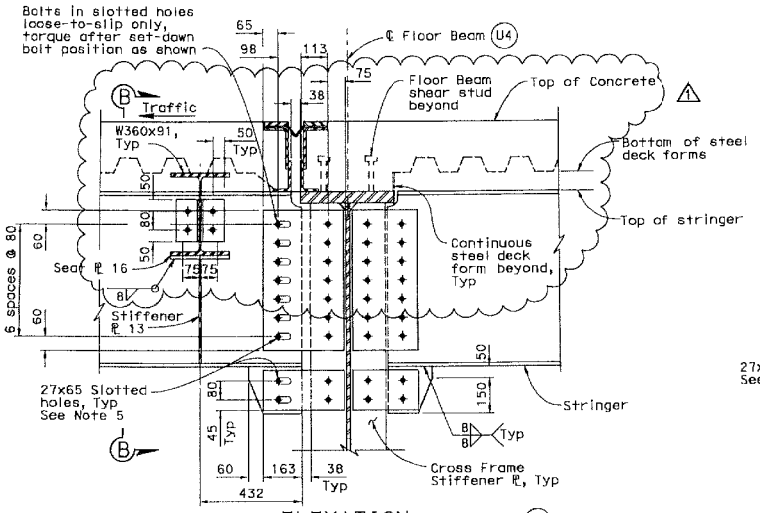

ELEVATION (Floor Beam (U4))
1:10

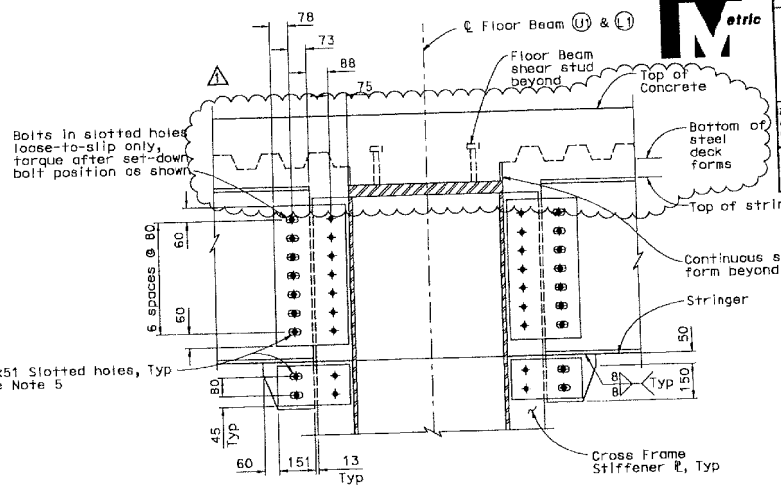

ELEVATION (Floor Beam (U1) & (L1))
1:10
For exterior stringers next to North and South Truss only

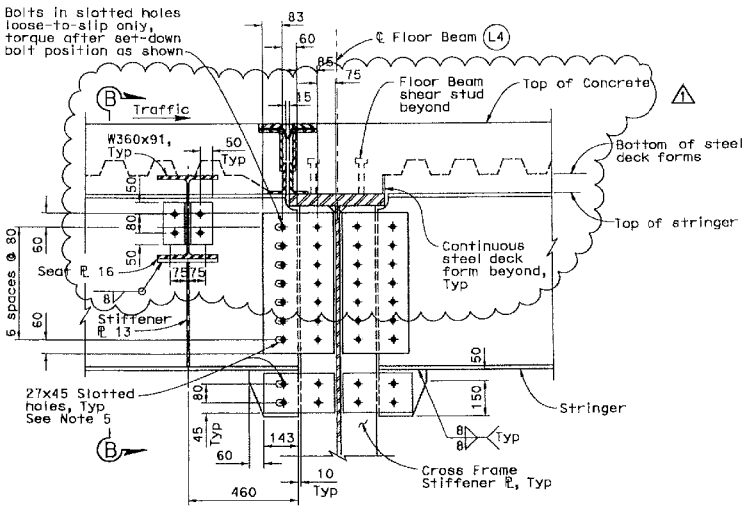

ELEVATION (Floor Beam (L4))
1:10

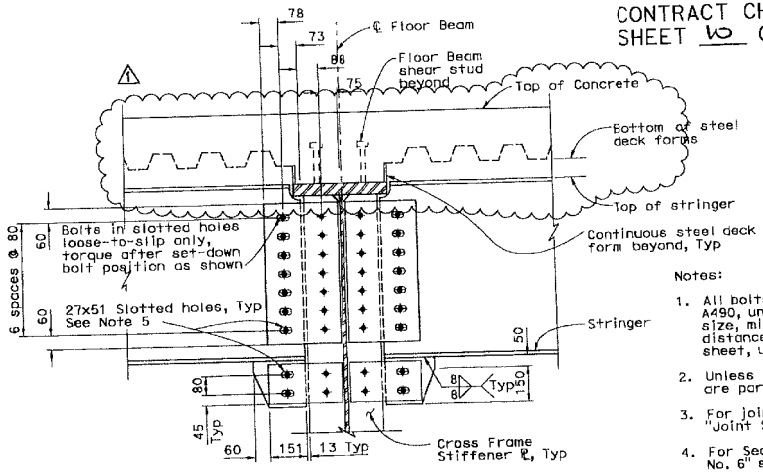

ELEVATION (Floor Beam (U2),(L2),(U3),(L3),(U5),(L5),(U6),(L6),(U7),(L7))
1:10
For exterior stringers next to North and South Truss only

ALL DIMENSIONS ARE IN MILLIMETERS UNLESS OTHERWISE SHOWN

DIST	COUNTY	ROUTE	KILOMETER POST TOTAL PROJECT	SHEET No	TOTAL
04	SF	80	12.6/13.2		

Mark Chen
REGISTERED CIVIL ENGINEER
4-7-08
PLANS APPROVAL DATE

REGISTERED PROFESSIONAL ENGINEER Chi Mark Chen No. C 40582 Exp. 03/31/09 CIVIL STATE OF CALIFORNIA

The State of California or its officers or agents shall not be responsible for the accuracy or completeness of electronic copies of this plan sheet.

T.Y. LIN / MOFFATT & NICHOL
Two Harrison Street, Suite 500
San Francisco, CA 94105

MARK	DATE	DESCRIPTIONS	BY	CH'D	CCO#
1	9/30/08	ELIMINATE DECK OVERLAY	MC	SA	

REVISIONS

CONTRACT CHANGE ORDER NO. 140-S2
SHEET 10 OF 20

100% PS&E

Notes:

1. All bolts for stringers shall be 25 Dia A490, unless noted otherwise. For hole size, minimum spacing, edge and end distances, see "General Notes No. 2" sheet, unless noted otherwise.
2. Unless otherwise shown dimensions are parallel to ℄ stringer.
3. For joint seal assembly details, see "Joint Seal Assembly" sheet.
4. For Section B-B, see "Stringer Details No. 6" sheet.
5. Provide structural grade plate washers (10 mm thick) and hardened washers.

SAN FRANCISCO OAKLAND BAY BRIDGE
EAST SPAN SEISMIC SAFETY PROJECT

EAST TIE-IN

STRINGER DETAILS NO. 4

T. Ostrom/M. Whiteside/A. Akinsanya
DESIGN OVERSIGHT
SIGN OFF DATE

DESIGN BY M. Chen, K. Liu
DETAILS BY S. Lee
QUANTITIES BY H. Nelson
CHECKED S. Cheng, H. Najm, H. Nelson
CHECKED M. Irwin, A. Lee
CHECKED A. Lee

PREPARED FOR THE STATE OF CALIFORNIA DEPARTMENT OF TRANSPORTATION

M. Sah
PROJECT ENGINEER
S. Abbas
PROJECT MANAGER

BRIDGE NO. 34-0006 (TEMP)
KILOMETER POST 12.6

CU
EA 0120R4

DISREGARD PRINTS BEARING EARLIER REVISION DATES

REVISION DATES (PRELIMINARY STAGE ONLY)

SHEET 64R1 OF 214

DESIGN DETAIL SHEET (METRIC) (REV. 3/1/99)
DATE TIME Pen Table File

ORIGINAL SCALE IN MILLIMETERS FOR REDUCED PLANS 0 10 20 30 40 50 60 70 80 90 100

FILE => p:\bb\04-012001\eti\revision 1o\akstd04.dgn

USERNAME => pzhoo DATE PLOTTED => 10/7/2008 TIME PLOTTED => 11:16:31 AM

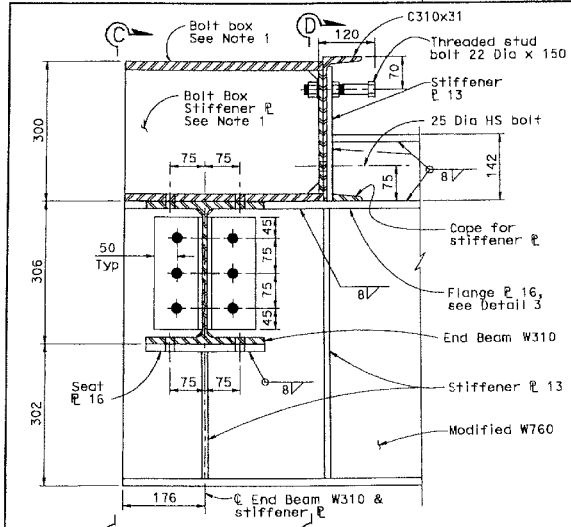

DETAIL 1 (Expansion Joint not shown for clarity)
1:5

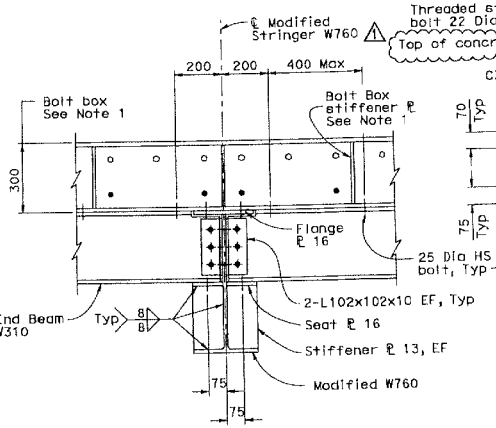

SECTION C-C
1:10

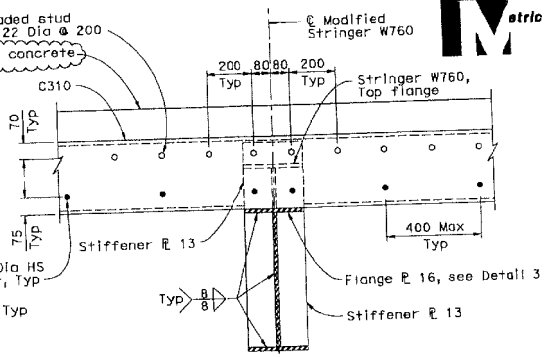

SECTION D-D
1:10

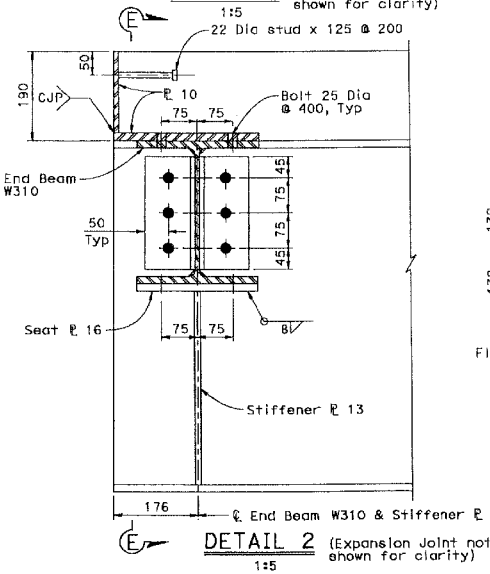

DETAIL 2 (Expansion Joint not shown for clarity)
1:5

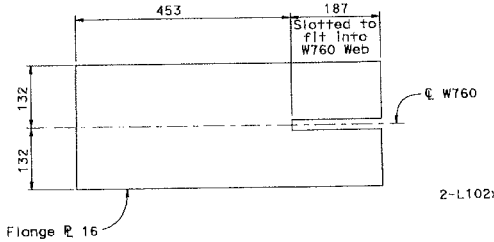

DETAIL 3
1:5

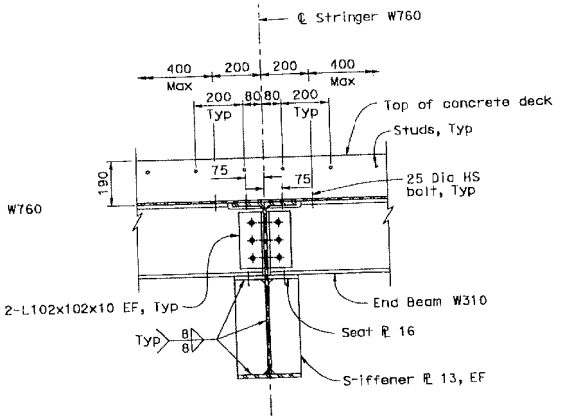

SECTION E-E
1:10
(Expansion Joint not shown for clarity)

DIST	COUNTY	ROUTE	KILOMETER POST TOTAL PROJECT	SHEET No	TOTAL
04	SF	80	12.6/13.2		

Mark Chen
REGISTERED CIVIL ENGINEER

4-7-08
PLANS APPROVAL DATE

The State of California or its officers or agents shall not be responsible for the accuracy or completeness of electronic copies of this plan sheet.

REGISTERED PROFESSIONAL ENGINEER
Chi Mark Chen
No. C 40582
Exp. 03/31/09
CIVIL
STATE OF CALIFORNIA

T.Y. LIN / MOFFATT & NICHOL
Two Harrison Street, Suite 500
San Francisco, CA 94105

100% PS&E

MARK	DATE	DESCRIPTIONS	BY	CH'D	CCO#
1	9/30/08	ELIMINATE DECK OVERLAY	MC	SA	

REVISIONS

CONTRACT CHANGE ORDER NO. 140-S2
SHEET 11 OF 20

Notes:

1. For details and dimensions not shown, see "Bent 52A Expansion Joint Details" sheets.
2. All bolts for end beams shall be 25 Dia A325 in standard holes, unless noted otherwise.

ALL DIMENSIONS ARE IN MILLIMETERS UNLESS OTHERWISE SHOWN

SAN FRANCISCO OAKLAND BAY BRIDGE
EAST SPAN SEISMIC SAFETY PROJECT

EAST TIE-IN

STRINGER DETAILS NO. 5

T. Ostrom/M. Whiteside/A. Akinsanya
DESIGN OVERSIGHT

SIGN OFF DATE

DESIGN BY M. Chen, K. Liu — CHECKED S. Cheng, H. Najm, H. Nelson
DETAILS BY S. Lee — CHECKED M. Irwin, A. Lee
QUANTITIES BY H. Nelson — CHECKED A. Lee

PREPARED FOR THE STATE OF CALIFORNIA DEPARTMENT OF TRANSPORTATION

M. Sah
PROJECT ENGINEER
S. Abbas
PROJECT MANAGER

BRIDGE NO. 34-0006 (TEMP)
KILOMETER POST 12.6

CU
EA 0120R4

DISREGARD PRINTS BEARING EARLIER REVISION DATES

REVISION DATES (PRELIMINARY STAGE ONLY)

SHEET 65R1 OF 214

DESIGN DETAIL SHEET (METRIC) (REV. 3/1/98)
@DATE@ @TIME@ Pen Table File

ORIGINAL SCALE IN MILLIMETERS FOR REDUCED PLANS 0 10 20 30 40 50 60 70 80 90 100

FILE => p:\bb\04-012001\sti\revision 1a\akstd05.dgn

USERNAME => pzhoo DATE PLOTTED => 10/7/2008 TIME PLOTTED => 11:16:36 AM

DIST	COUNTY	ROUTE	KILOMETER POST TOTAL PROJECT	SHEET No	TOTAL
04	SF	80	12.6/13.2		

Mark Chen
REGISTERED CIVIL ENGINEER

4-7-08
PLANS APPROVAL DATE

REGISTERED PROFESSIONAL ENGINEER
Chi Mark Chen
No. C 40582
Exp. 03/31/09
CIVIL
STATE OF CALIFORNIA

The State of California or its officers or agents shall not be responsible for the accuracy or completeness of electronic copies of this plan sheet.

T.Y. LIN / MOFFATT & NICHOL
Two Harrison Street, Suite 500
San Francisco, CA 94105

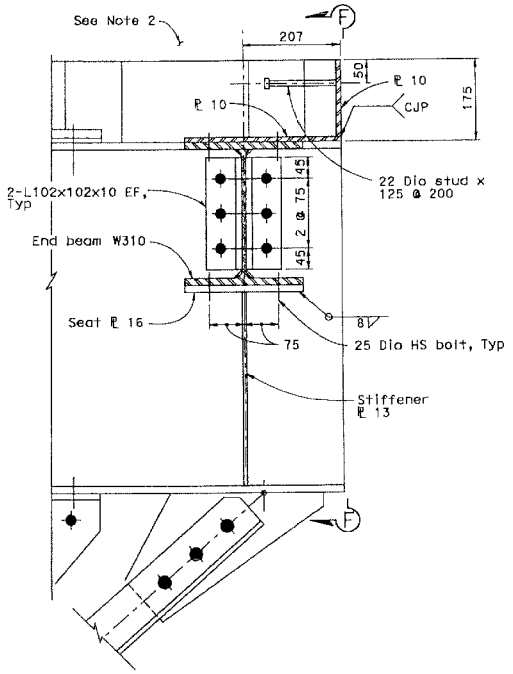

DETAIL 4
1:5

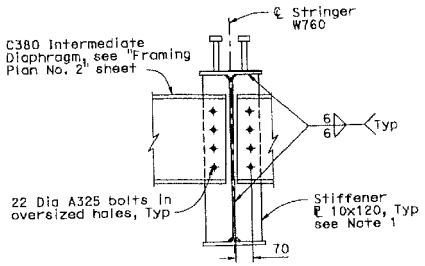

INTERMEDIATE DIAPHRAGM CONNECTION
1:10

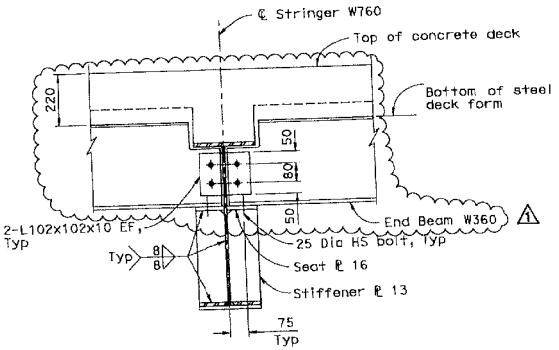

SECTION B-B
1:10

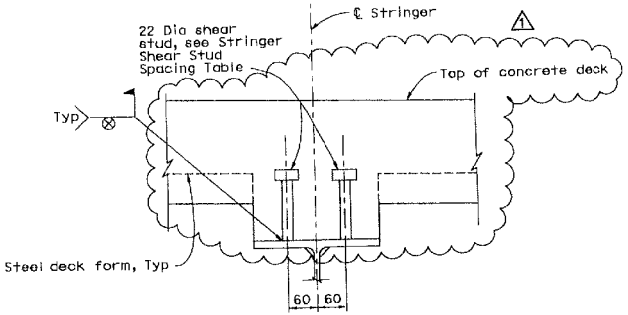

SHEAR STUD DETAIL
1:5

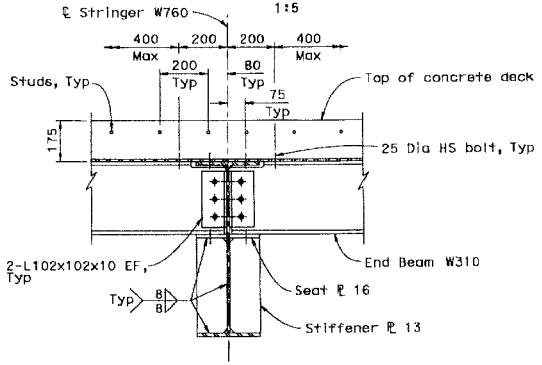

SECTION F-F
1:10

STRINGER SHEAR STUD SPACING TABLE*

0-0.25 L	0.25 L-0.75 L	0.75 L-1.0 L
@ 100 interval	@ 150 interval	@ 100 interval

L=Span Length of Stringer between ℄ Floor Beams.

* Except in, the proximity of floor beams. See Section A-A in "Concrete Deck Details No.1" sheet

MARK	DATE	DESCRIPTIONS	BY	CH'D	CCO#
1	9/30/08	ELIMINATE DECK OVERLAY	MC	SA	

REVISIONS

CONTRACT CHANGE ORDER NO. 140-S2
SHEET 12 OF 20

Notes:

1. Stringer stiffeners at intermediate diaphragm connections only.
2. For details not shown, see "Pier E1 Expansion Joint Details" sheets.
3. All bolts for end beams shall be 25 Dia A325 in standard holes, unless noted otherwise.
4. For location of Section B-B, see "Stringer Details No. 4" sheet.

ALL DIMENSIONS ARE IN MILLIMETERS UNLESS OTHERWISE SHOWN

SAN FRANCISCO OAKLAND BAY BRIDGE
EAST SPAN SEISMIC SAFETY PROJECT

EAST TIE-IN

STRINGER DETAILS NO. 6

T. Oetrom/M. Whiteside/A. Akinsanya
DESIGN OVERSIGHT

SIGN OFF DATE

DESIGN DETAIL SHEET (METRIC) REV. 3/1/98
@DATE@ @TIME@ Pen Table File

	BY	CHECKED
DESIGN	M. Chen, K. Liu	S. Cheng, H. Majs, H. Nelson
DETAILS	S. Lee	M. Irwin, A. Lee
QUANTITIES	H. Nelson	A. Lee

PREPARED FOR THE STATE OF CALIFORNIA DEPARTMENT OF TRANSPORTATION

M. Sah
PROJECT ENGINEER
S. Abbas
PROJECT MANAGER

BRIDGE NO. 34-0006 (TEMP)
KILOMETER POST 12.6

CU
EA 0120R4

DISREGARD PRINTS BEARING EARLIER REVISION DATES

REVISION DATES (PRELIMINARY STAGE ONLY)

SHEET 66R1 OF 214

ORIGINAL SCALE IN MILLIMETERS FOR REDUCED PLANS 0 10 20 30 40 50 60 70 80 90 100

FILE => p:\bb\04-012001\eti\revision 1a\akstd06.dgn

100% PS&E

FILE => p:\bb\04-012001\eti\revision 1a\akstd06.dgn

TIME PLOTTED => 11:16:39 AM

DATE PLOTTED => 10/7/2008

USERNAME => pzhao

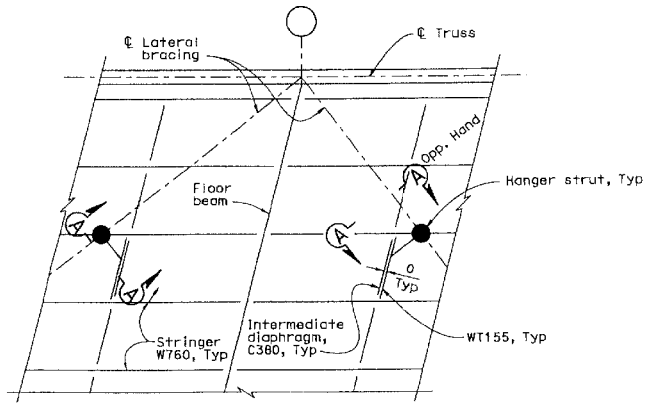

Note: For hanger strut locations, see "Framing Plan No. 2" sheet

HANGER STRUT PLAN

1:100

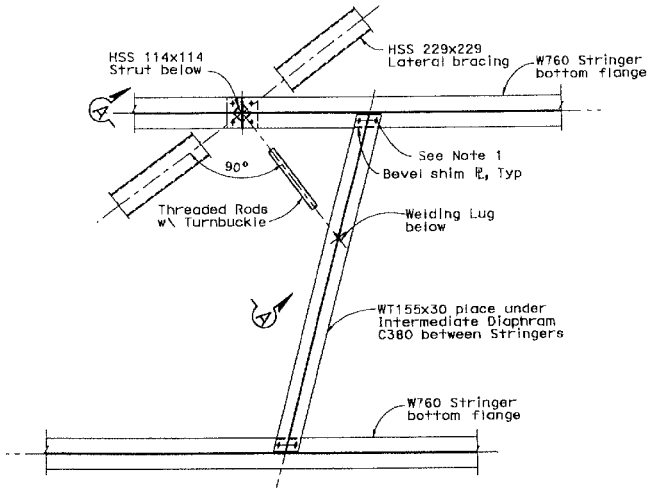

SECTION B-B

1:20

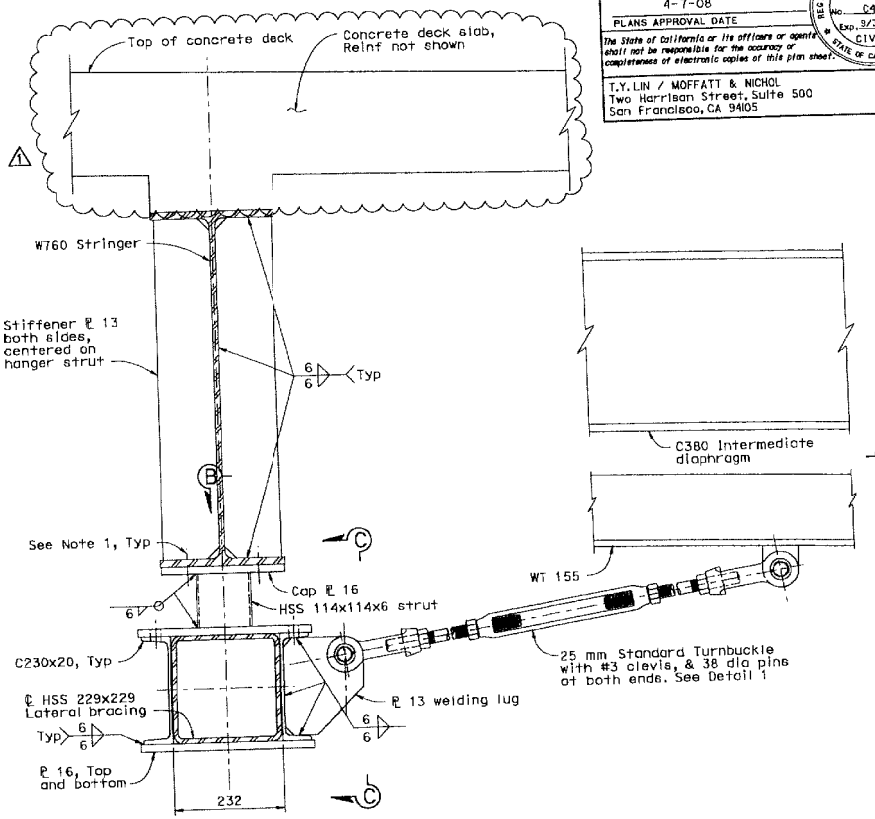

SECTION A-A

1:5

Notes:

1. All Bolts shall be 22mm Dia A490, unless noted otherwise. For minimum spacing, edge distances and end distances, see "General Notes No. 2" sheet.
2. For Section C-C, cap plate and Detail 1, see "Lateral Bracing Details No. 9" sheet.

MARK	DATE	DESCRIPTIONS	BY	CH'D	CCO#
1	9/30/08	ELIMINATE DECK OVERLAY	MC	SA	

REVISIONS

CONTRACT CHANGE ORDER NO. 140-S2
SHEET 13 OF 20

ALL DIMENSIONS ARE IN MILLIMETERS UNLESS OTHERWISE SHOWN

DIST	COUNTY	ROUTE	KILOMETER POST TOTAL PROJECT	SHEET No	TOTAL
04	SF	80	12.6/13.2		

REGISTERED CIVIL ENGINEER

4-7-08
PLANS APPROVAL DATE

REGISTERED PROFESSIONAL ENGINEER — David Griffith, No. C49125, Exp. 9/30/08, CIVIL, STATE OF CALIFORNIA

The State of California or its officers or agents shall not be responsible for the accuracy or completeness of electronic copies of this plan sheet.

T.Y. LIN / MOFFATT & NICHOL
Two Harrison Street, Suite 500
San Francisco, CA 94105

100% PS&E

FILE => p:\bb\04-012001\efl\revision 1a\oklbd08.dgn

TIME PLOTTED => 11:16:43 AM

DATE PLOTTED => 10/7/2008

USERNAME => pzhao

T. Ostrom/M. Whiteside/A. Akinsanya	DESIGN	D. Griffith, S. Singh	S. Cheng, H. Najm
DESIGN OVERSIGHT	DETAILS	P. Zhao	M. Irwin, A. Lee
SIGN OFF DATE	QUANTITIES	H. Nelson	A. Lee

PREPARED FOR THE STATE OF CALIFORNIA
DEPARTMENT OF TRANSPORTATION

M. Son
PROJECT ENGINEER
S. Abbas
PROJECT MANAGER

BRIDGE NO. 34-0006 (TEMP)
KILOMETER POST 12.6

CU
EA 0120R4

DISREGARD PRINTS BEARING EARLIER REVISION DATES →

REVISION DATES (PRELIMINARY STAGE ONLY): 11/05 | 5/06 | 9/30/08

SAN FRANCISCO OAKLAND BAY BRIDGE
EAST SPAN SEISMIC SAFETY PROJECT

EAST TIE-IN

LATERAL BRACING DETAILS NO. 8

SHEET 178R1 OF 214

DESIGN DETAIL SHEET (METRIC) REV. 3/1/98
@DATE@ @TIME@ Pen Table File

ORIGINAL SCALE IN MILLIMETERS FOR REDUCED PLANS 0 10 20 30 40 50 60 70 80 90 100

FILE => p:\bb\04-012001\efl\revision 1a\oklbd08.dgn

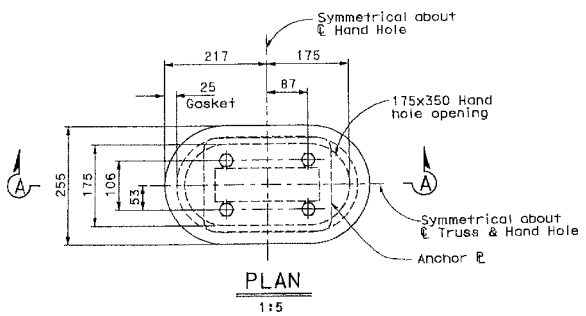

PLAN

1:5

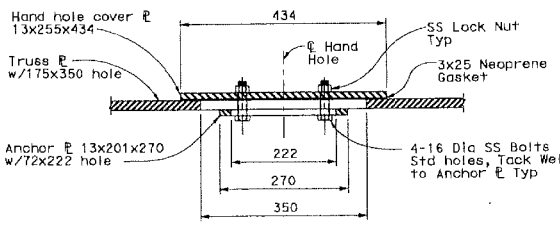

SECTION A-A

1:5

HAND HOLE COVER ℄ DETAIL

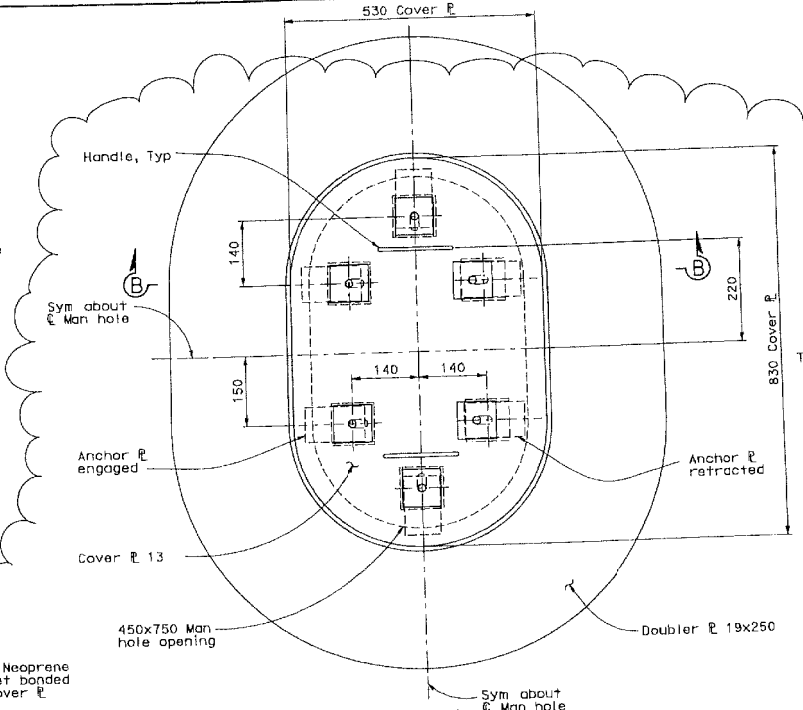

PLAN

1:5

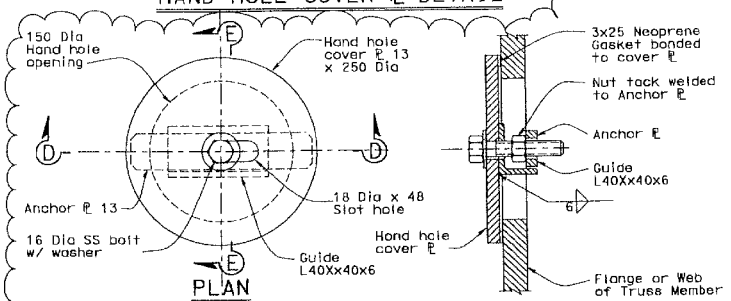

PLAN

1:2.5

SECTION E-E

1:2.5

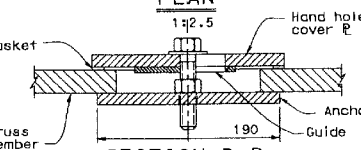

SECTION D-D

1:2.5

150 DIA HAND HOLE COVER ℄ DETAIL

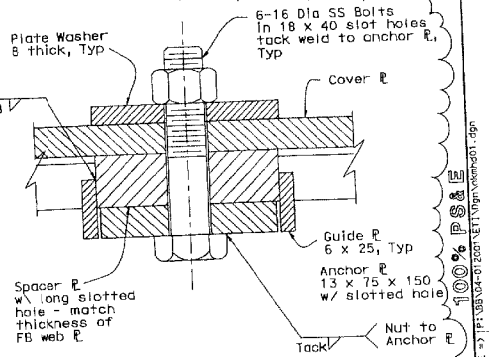

SECTION C-C

1:1

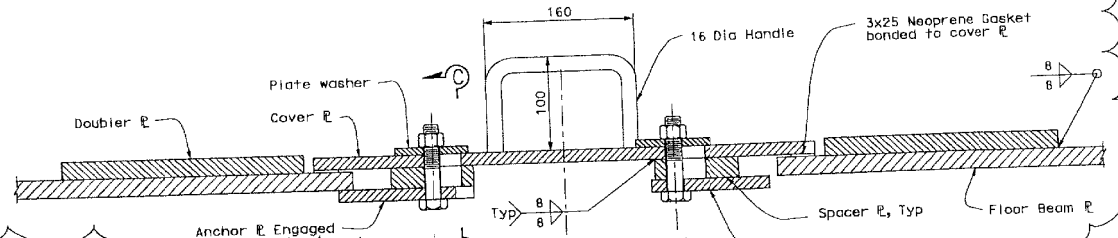

SECTION B-B

1:2.5

MAN HOLE COVER ℄ DETAIL

MARK	DATE	DESCRIPTIONS	BY	CH'D	CCO#
		REVISIONS			
1	02/17/09	Add 150 Dia hand hole cover ℄	DG	SA	
		Revise man hole cover ℄			

CONTRACT CHANGE ORDER NO. 140-S2

SHEET 14 OF 20

ALL DIMENSIONS ARE IN MILLIMETERS UNLESS OTHERWISE SHOWN

DIST	COUNTY	ROUTE	KILOMETER POST TOTAL PROJECT	SHEET NO	TOTAL
04	SF	80	12.6/13.2		

REGISTERED CIVIL ENGINEER

4-7-08

PLANS APPROVAL DATE

The State of California or its officers or agents shall not be responsible for the accuracy or completeness of electronic copies of this plan sheet.

REGISTERED PROFESSIONAL ENGINEER — David Griffith — No. C49125 — Exp. 9/30/08 — CIVIL — STATE OF CALIFORNIA

T.Y. LIN / MOFFATT & NICHOL
Two Harrison Street, Suite 500
San Francisco, CA 94105

SAN FRANCISCO OAKLAND BAY BRIDGE
EAST SPAN SEISMIC SAFETY PROJECT

EAST TIE-IN

MAN HOLE & HAND HOLE DETAILS

DESIGN OVERSIGHT	DESIGN	DETAILS	QUANTITIES
T. Ostrom/M. Whiteside/A. Akinsanya	BY T. Griffith	BY Y. Ortega	BY S. Nelson
SIGN OFF DATE	CHECKED S. Cheng, H. Najm	CHECKED A. Lee	CHECKED A. Leo

PREPARED FOR THE STATE OF CALIFORNIA DEPARTMENT OF TRANSPORTATION

M. Soh, PROJECT ENGINEER
S. Abdoe, PROJECT MANAGER

CU
EA C120R4

BRIDGE NO. 34-0006 (TEMP)
KILOMETER POST 12.6

DISREGARD PRINTS BEARING EARLIER REVISION DATES

REVISION DATES (PRELIMINARY STAGE ONLY)

SHEET 65R1 214

DESIGN DETAIL SHEET (METRIC) REV. 3/1/88
DATE TIME Pen Table File

ORIGINAL SCALE IN MILLIMETERS FOR REDUCED PLANS 0 10 20 30 40 50 60 70 80 90 100

FILE => P:\BB\04-012001\ETI\Dgn\akhnd01.dgn

DATE PLOTTED => 2/17/2009 TIME PLOTTED => 2:03:11 PM

USERNAME => AJeo

DIST	COUNTY	ROUTE	KILOMETER POST TOTAL PROJECT	SHEET No	TOTAL
04	SF	80	12.6/13.2		

Mark Chen
REGISTERED CIVIL ENGINEER

4-7-08
PLANS APPROVAL DATE

REGISTERED PROFESSIONAL ENGINEER
Chi Mark Chen
No. C 40582
Exp. 03/31/09
CIVIL
STATE OF CALIFORNIA

The State of California or its officers or agents shall not be responsible for the accuracy or completeness of electronic copies of this plan sheet.

T.Y. LIN / MOFFATT & NICHOL
Two Harrison Street, Suite 500
San Francisco, CA 94105

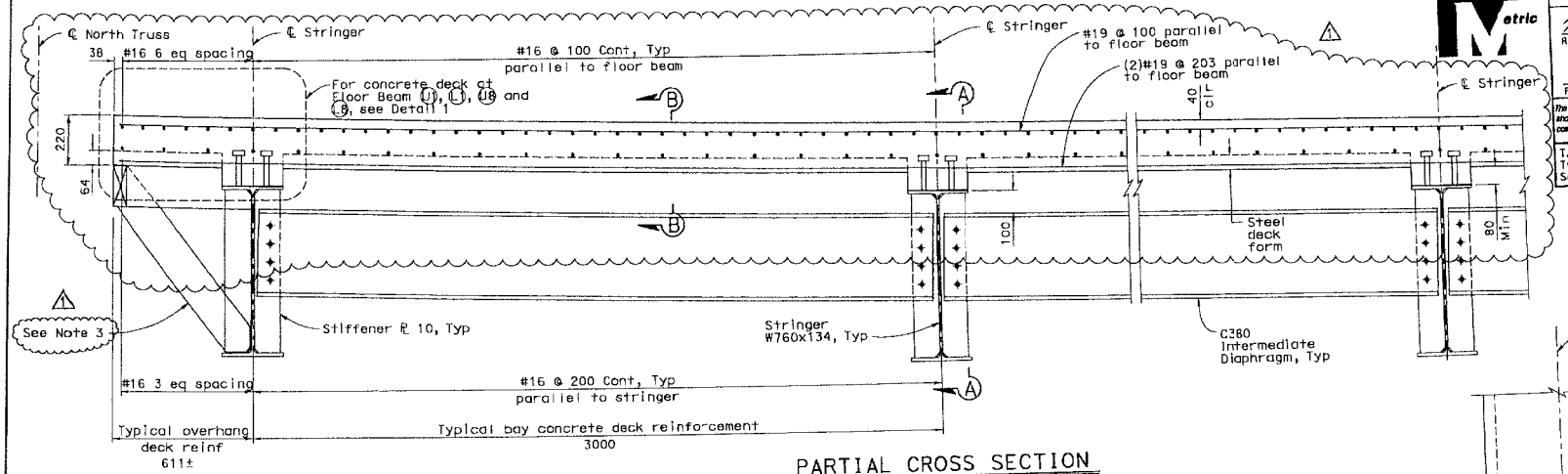

PARTIAL CROSS SECTION

1:10

Note: Dimensions are given parallel to Floor Beams

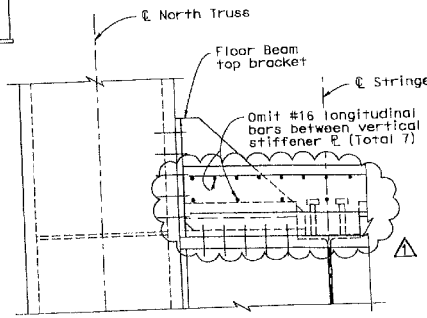

(Floor Beam L8 shown, U1, L1 and U8 similar)

DETAIL 1

1:10

Shown parallel to stringers

MARK	DATE	DESCRIPTIONS	BY	CH'D	CCO#
1	9/30/08	ELIMINATE DECK OVERLAY	MC	SA	

REVISIONS

CONTRACT CHANGE ORDER NO. 140-S2
SHEET 15 OF 20

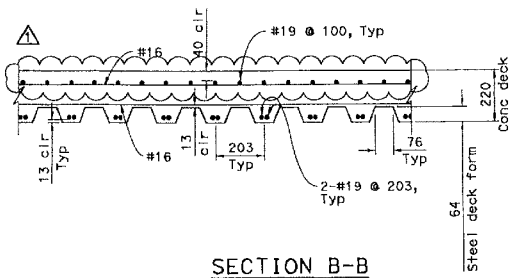

SECTION B-B

1:10

Shown parallel to Floor Beams

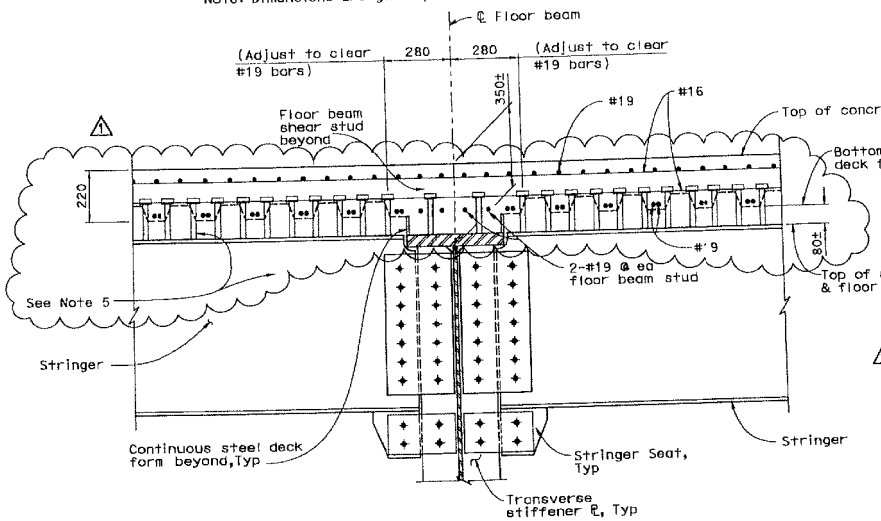

SECTION A-A

1:10

Note: For details not shown, see Section B-B

Notes:

1. Concrete shall be light weight (17.3 kN/m^3 or 110 pcf) with f'c=28 MPa.
2. Steel formwork with sound proofing material at 240 N/m2 (5 lb/ft^2) assumed.
3. The Contractor shall be responsible for securing steel deck forms to the supporting steel deck members by spot welding or screws. Contractor shall provide all required form accessories for edge, end closure and temporary supports during deck concrete casting.
4. For stringer and intermediate diaphragm connection details, see "Stringer Details" sheets.
5. For Stringer shear stud detail, see "Stringer Details" sheet.

ALL DIMENSIONS ARE IN MILLIMETERS UNLESS OTHERWISE SHOWN

SAN FRANCISCO OAKLAND BAY BRIDGE
EAST SPAN SEISMIC SAFETY PROJECT

EAST TIE-IN

CONCRETE DECK DETAILS NO. 1

T. Ostrom/M. Whiteside/A. Akinsanya
DESIGN OVERSIGHT

SIGN OFF DATE

DESIGN DETAIL SHEET (METRIC) (REV. 3/1/98)
DATE TIME Pen Table File

	BY	CHECKED
DESIGN	M. Chen, K. Liu	S. Cheng, H. Najm, H. Nelson
DETAILS	S. Lee	M. Irwin, A. Lee
QUANTITIES	H. Nelson	A. Lee

ORIGINAL SCALE IN MILLIMETERS FOR REDUCED PLANS 0 10 20 30 40 50 60 70 80 90 100

PREPARED FOR THE STATE OF CALIFORNIA DEPARTMENT OF TRANSPORTATION

M. Sah
PROJECT ENGINEER
S. Abbas
PROJECT MANAGER

CU
EA 0120R4

BRIDGE NO. 34-0006 (TEMP)
KILOMETER POST 12.6

DISREGARD PRINTS BEARING EARLIER REVISION DATES

REVISION DATES (PRELIMINARY STAGE ONLY)

SHEET 86R1 OF 214

FILE => p:\bb\04-012001\eti\revision 1a\akcdd01.dgn

100% PS&E

FILE => p:\bb\04-012001\eti\revision 1a\akcdd01.dgn
TIME PLOTTED => 11:16:53 AM
DATE PLOTTED => 10/7/2008
USERNAME => pzhao

DIST	COUNTY	ROUTE	KILOMETER POST TOTAL PROJECT	SHEET No	TOTAL
04	SF	80	12.6/13.2		

MARK	DATE	REVISIONS / DESCRIPTIONS	BY	CH'D	CCO#
1	9/30/08	ELIMINATE DECK OVERLAY	MC	SA	

CONTRACT CHANGE ORDER NO. 140-S2
SHEET 16 OF 20

Caltrans Metric

Mark Chen
REGISTERED CIVIL ENGINEER
4-7-08
PLANS APPROVAL DATE
The State of California or its officers or agents shall not be responsible for the accuracy or completeness of electronic copies of this plan sheet.

REGISTERED PROFESSIONAL ENGINEER — Chi Mark Chen — No. C 40582 — Exp. 03/31/09 — CIVIL — STATE OF CALIFORNIA

T.Y.LIN / MOFFATT & NICHOL
Two Harrison Street, Suite 500
San Francisco, CA 94105

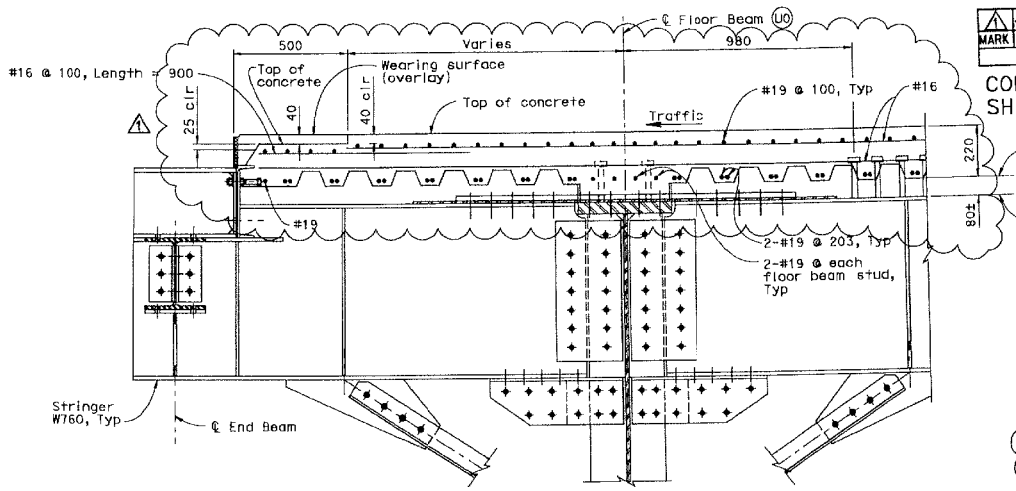

CONCRETE DECK AT FLOOR BEAM U0
1:10

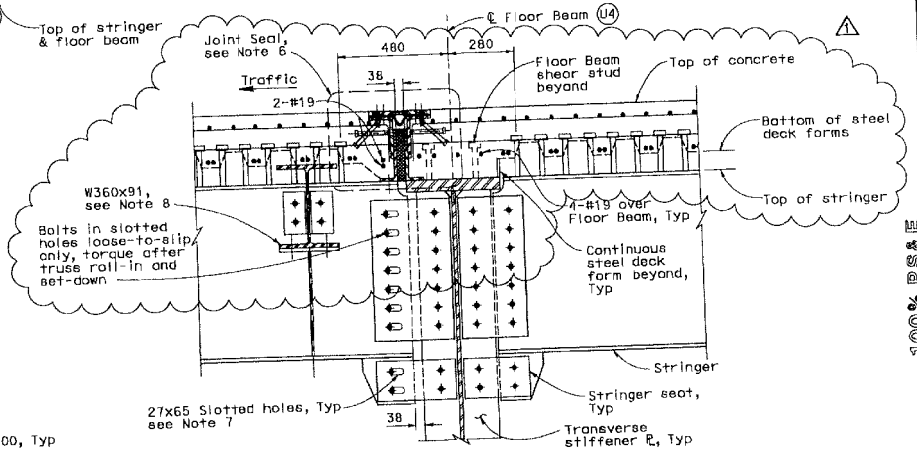

UPPER DECK EXPANSION JOINT DETAIL
1:10

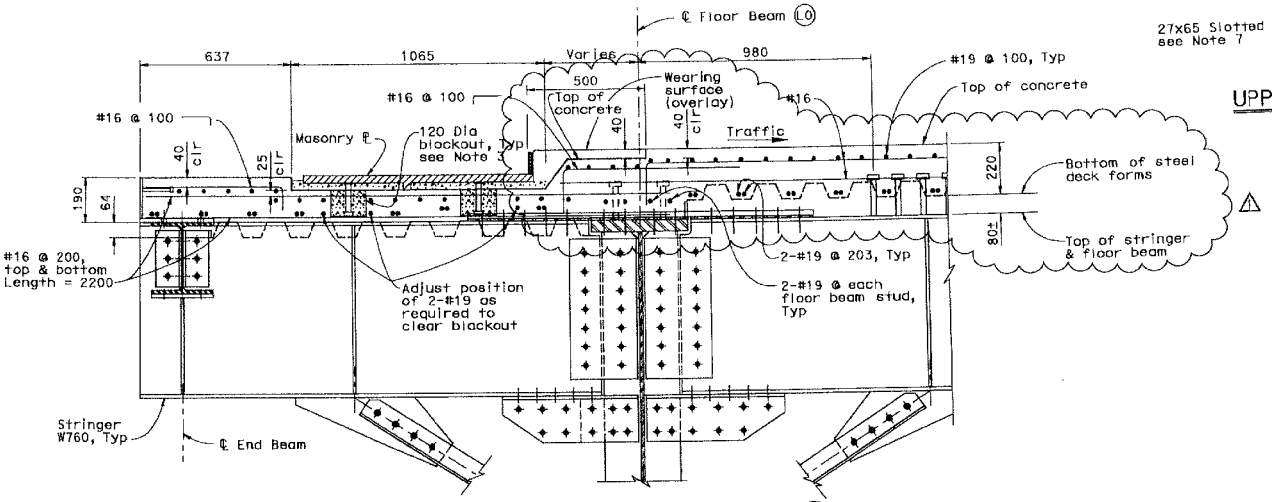

CONCRETE DECK AT FLOOR BEAM L0
1:10

Notes:

1. For Stringer connection details, see "Stringer Details" sheets.
2. For dimensions not shown and for Expansion Joint Details, see "Bent 52A Expansion Joint Details" sheets.
3. Concrete deck in blockout area shall be poured after installation of Bent 52A expansion joint deck panel plate assemblies.
4. For stringer, end beam and the connection details, see "Stringer Details" sheet.
5. For reinforcing details not shown, see "Concrete Deck Details No. 1" sheet.
6. For joint seal assembly details, see "Joint Seal Assembly" sheet.
7. For slotted hole connections, see "Stringer Details" sheet.
8. For W360 end beam details, see "Stringer Details" sheets.

ALL DIMENSIONS ARE IN MILLIMETERS UNLESS OTHERWISE SHOWN

SAN FRANCISCO OAKLAND BAY BRIDGE
EAST SPAN SEISMIC SAFETY PROJECT
EAST TIE-IN
CONCRETE DECK DETAILS NO. 2

T. Ostrom/M. Whiteside/A. Akinsanya
DESIGN OVERSIGHT

SIGN OFF DATE

	BY	CHECKED
DESIGN	W. Chen, K. Liu	S. Cheng, H. Nojm, H. Nelson
DETAILS	S. Lee	W. Irwin, A. Lee
QUANTITIES	H. Nelson	A. Lee

PREPARED FOR THE STATE OF CALIFORNIA
DEPARTMENT OF TRANSPORTATION

M. Sah — PROJECT ENGINEER
S. Abbas — PROJECT MANAGER

BRIDGE NO. 34-0006 (TEMP)
KILOMETER POST 12.6

CU EA 0120R4

DISREGARD PRINTS BEARING EARLIER REVISION DATES →

REVISION DATES (PRELIMINARY STAGE ONLY)

SHEET 87R1 OF 214

DESIGN DETAIL SHEET (METRIC) REV. 5/1/98
@DATE@ @TIME@ Pen Table File

ORIGINAL SCALE IN MILLIMETERS FOR REDUCED PLANS 0 10 20 30 40 50 60 70 80 90 100

FILE => p:\bb\04-012001\eti\revision 1c\akcdd02.dgn

100% PS&E

FILE => p:\bb\04-012001\eti\revision 1c\akcdd02.dgn
TIME PLOTTED => 11:16:58 AM
DATE PLOTTED => 10/7/2008
USERNAME => p2hoo

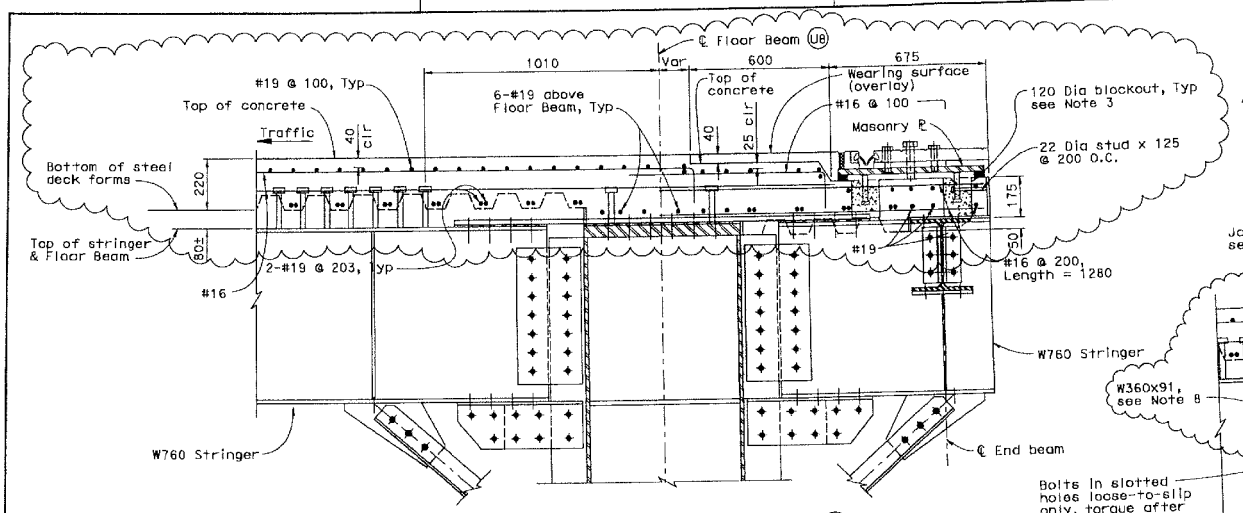

CONCRETE DECK AT FLOOR BEAM U8

1:10

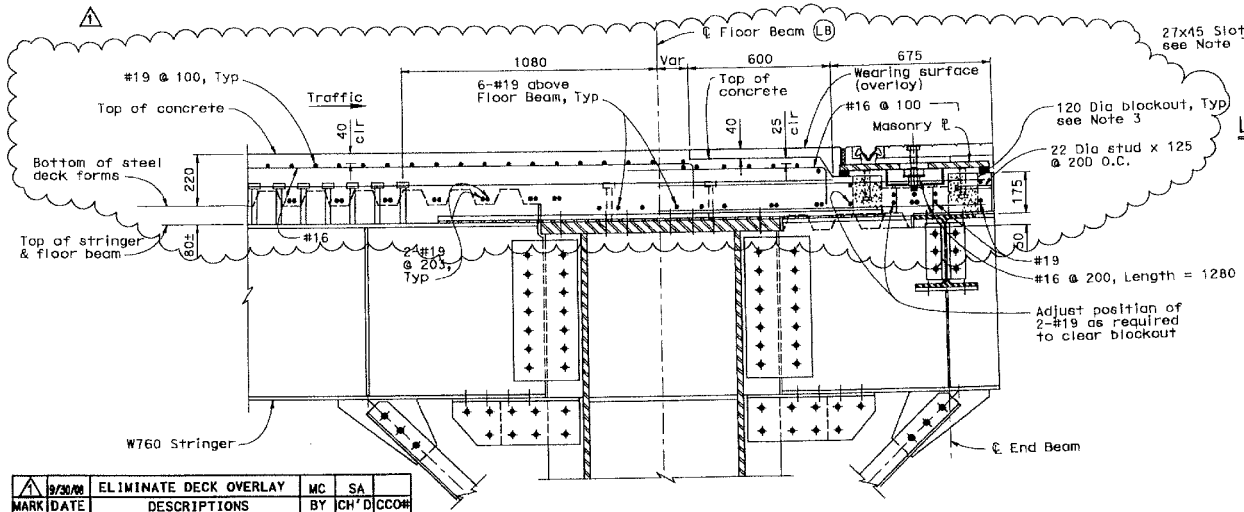

CONCRETE DECK AT FLOOR BEAM L8

1:10

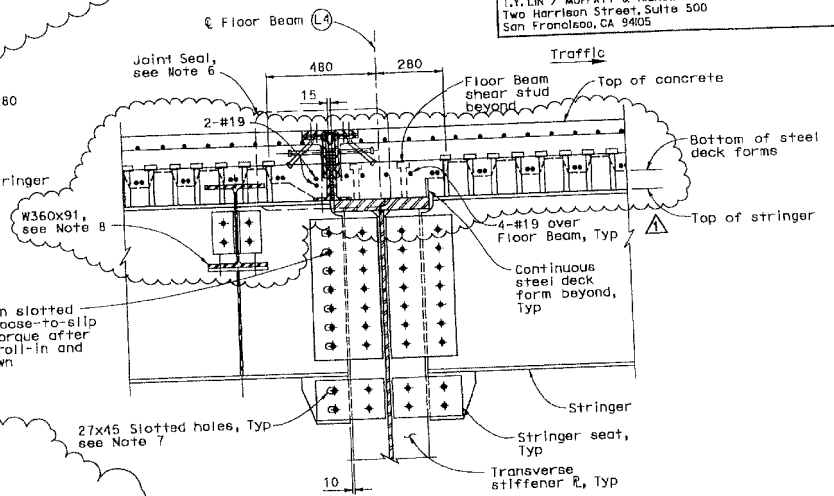

LOWER DECK EXPANSION JOINT DETAIL

1:10

Notes:

1. For Stringer connection details, see "Stringer Details" sheets.
2. For dimensions not shown and for Expansion Joint Details, see "Pier E1 Expansion Joint Details" sheets.
3. Concrete deck in blockout area shall be poured after installation of Pier E1 expansion joint deck panel plate assemblies.
4. For stringer, end beam and the connection details, see "Stringer Details" sheet.
5. For reinforcing details not shown, see "Concrete Deck Details No. 1" sheet.
6. For joint seal assembly details, see "Joint Seal Assembly" sheet.
7. For slotted hole connections, see "Stringer Details" sheet.
8. For W360 end beam details, see "Stringer Details" sheets.

MARK	DATE	DESCRIPTIONS	BY	CH'D	CCO#
1	9/30/08	ELIMINATE DECK OVERLAY	MC	SA	
		REVISIONS			

CONTRACT CHANGE ORDER NO. 140-S2

SHEET 17 OF 20

ALL DIMENSIONS ARE IN MILLIMETERS UNLESS OTHERWISE SHOWN

DIST	COUNTY	ROUTE	KILOMETER POST TOTAL PROJECT	SHEET NO	TOTAL
04	SF	80	12.6/13.2		

Mark Chen
REGISTERED CIVIL ENGINEER

4-7-08
PLANS APPROVAL DATE

The State of California or its officers or agents shall not be responsible for the accuracy or completeness of electronic copies of this plan sheet.

REGISTERED PROFESSIONAL ENGINEER — Chi Mark Chen — No. C 40582 — Exp. 03/31/09 — CIVIL — STATE OF CALIFORNIA

T.Y.LIN / MOFFATT & NICHOL
Two Harrison Street, Suite 500
San Francisco, CA 94105

100% PS&E

FILE => p:\bb\04-012001\et\revision 1o\akcdd03.dgn

TIME PLOTTED => 11:17:09 AM

DATE PLOTTED => 10/7/2008

USERNAME => pstoo

T. Ostrom/M. Whiteside/A. Akinsanya	DESIGN	BY M. Chen, K. Liu	CHECKED S. Cheng, H. Wajm, H. Nelson
DESIGN OVERSIGHT	DETAILS	BY S. Lee	CHECKED M. Irwin, A. Lee
SIGN OFF DATE	QUANTITIES	BY H. Nelson	CHECKED A. Lee

PREPARED FOR THE STATE OF CALIFORNIA
DEPARTMENT OF TRANSPORTATION

M. Sah	PROJECT ENGINEER
S. Abbas	PROJECT MANAGER
CU	
EA 0120R4	

BRIDGE NO. 34-0006 (TEMP)
KILOMETER POST 12.6

DISREGARD PRINTS BEARING EARLIER REVISION DATES →

REVISION DATES (PRELIMINARY STAGE ONLY)

SAN FRANCISCO OAKLAND BAY BRIDGE
EAST SPAN SEISMIC SAFETY PROJECT

EAST TIE-IN

CONCRETE DECK DETAILS NO. 3

SHEET 88R1 OF 214

DESIGN DETAIL SHEET (METRIC) (REV. 3/1/99) @DATE@ @TIME@ Pen Table File

ORIGINAL SCALE IN MILLIMETERS FOR REDUCED PLANS 0 10 20 30 40 50 60 70 80 90 100

FILE => p:\bb\04-012001\et\revision 1o\akcdd03.dgn

DIST	COUNTY	ROUTE	KILOMETER POST TOTAL PROJECT	SHEET No	TOTAL
04	SF	80	12.6/13.2		

Mark Chen
REGISTERED CIVIL ENGINEER

4-7-08
PLANS APPROVAL DATE

The State of California or its officers or agents shall not be responsible for the accuracy or completeness of electronic copies of this plan sheet.

REGISTERED PROFESSIONAL ENGINEER
Chi Mark Chen
No. C 40582
Exp. 03/31/09
CIVIL
STATE OF CALIFORNIA

T.Y. LIN / MOFFATT & NICHOL
Two Harrison Street, Suite 500
San Francisco, CA 94105

Caltrans Metric

MARK	DATE	DESCRIPTIONS	BY	CH'D	CCO#
1	9/30/08	ELIMINATE DECK OVERLAY	MC	SA	

REVISIONS

CONTRACT CHANGE ORDER NO. 140-S2
SHEET 18 OF 20

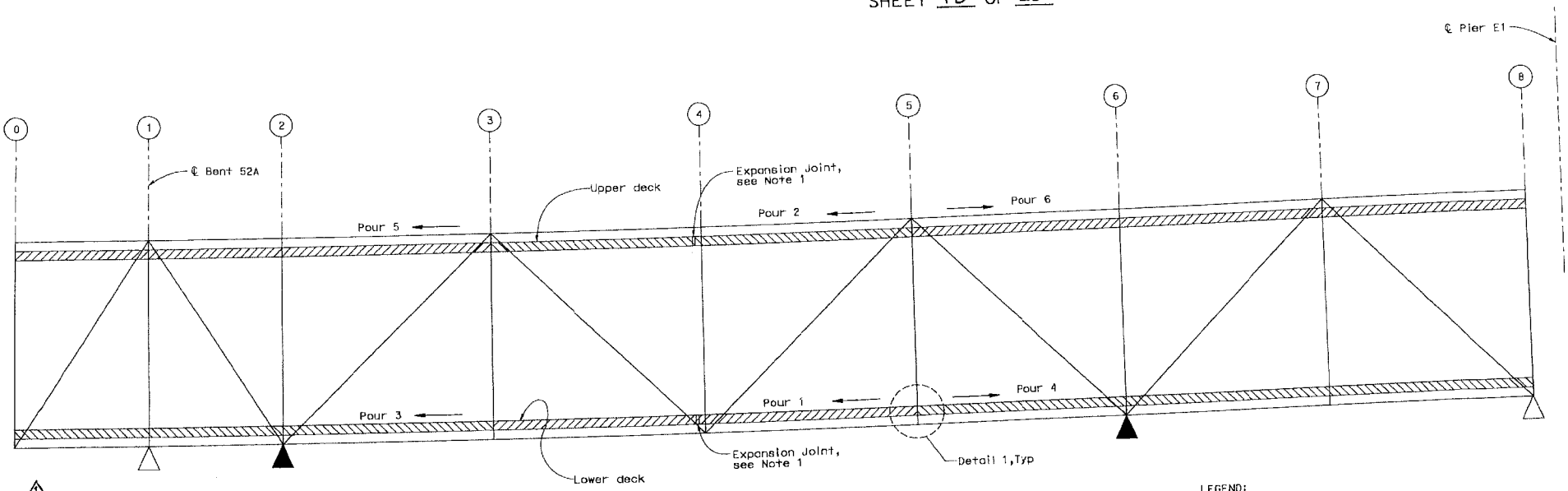

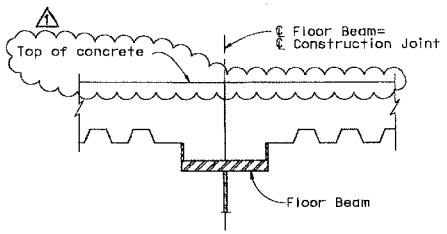

DETAIL 1
No Scale

TYPICAL DECK CONSTRUCTION JOINT

Note: Longitudinal reinforcement shall be continuous through construction joint.

CONCRETE DECK POURING SEQUENCE

ELEVATION
No Scale

Deck is cast while on skid bent supports

LEGEND:

- or — Indicates limits of concrete placement in deck pour sequence number as noted.
- ← Indicates direction of concrete pour
- △ Indicates final support location
- ▲ Indication support location at time of deck casting

Notes:

1. For concrete deck expansion joint details, see "Concrete Deck Details" sheet.

ALL DIMENSIONS ARE IN MILLIMETERS UNLESS OTHERWISE SHOWN

SAN FRANCISCO OAKLAND BAY BRIDGE
EAST SPAN SEISMIC SAFETY PROJECT

EAST TIE-IN

POUR SEQUENCE

T. Ostrom/M. Whiteside/A. Akinsanya
DESIGN OVERSIGHT

SIGN OFF DATE

DESIGN DETAIL SHEET (METRIC) (REV. 3/1/98)
@DATE@ @TIME@ Pen Table File

	BY	CHECKED
DESIGN	M. Chen, M. Yu	S. Cheng, H. Najm
DETAILS	S. Lee	A. Lee
QUANTITIES	H. Nelson	A. Lee

ORIGINAL SCALE IN MILLIMETERS FOR REDUCED PLANS 0 10 20 30 40 50 60 70 80 90 100

PREPARED FOR THE
STATE OF CALIFORNIA
DEPARTMENT OF TRANSPORTATION

M. Sah
PROJECT ENGINEER
S. Abbas
PROJECT MANAGER

CU
EA 0120R4

BRIDGE NO. 34-0006 (TEMP)
KILOMETER POST 12.6

DISREGARD PRINTS BEARING EARLIER REVISION DATES

REVISION DATES (PRELIMINARY STAGE ONLY)

SHEET 89R1 OF 214

FILE => p:\bb\04-012001\eti\revision 1a\akpsq01.dgn

100% PS&E

FILE => p:\bb\04-012001\eti\revision 1a\akpsq01.dgn
TIME PLOTTED => 11:17:13 AM
DATE PLOTTED => 10/7/2008
USERNAME => pzhao

DIST	COUNTY	ROUTE	KILOMETER POST TOTAL PROJECT	SHEET No	TOTAL
04	SF	80	12.6/13.2		

Mark Chen
REGISTERED CIVIL ENGINEER

4-7-08
PLANS APPROVAL DATE

REGISTERED PROFESSIONAL ENGINEER
Chi Mark Chen
No. C 40582
Exp. 03/31/09
CIVIL
STATE OF CALIFORNIA

The State of California or its officers or agents shall not be responsible for the accuracy or completeness of electronic copies of this plan sheet.

T.Y. LIN / MOFFATT & NICHOL
Two Harrison Street, Suite 500
San Francisco, CA 94105

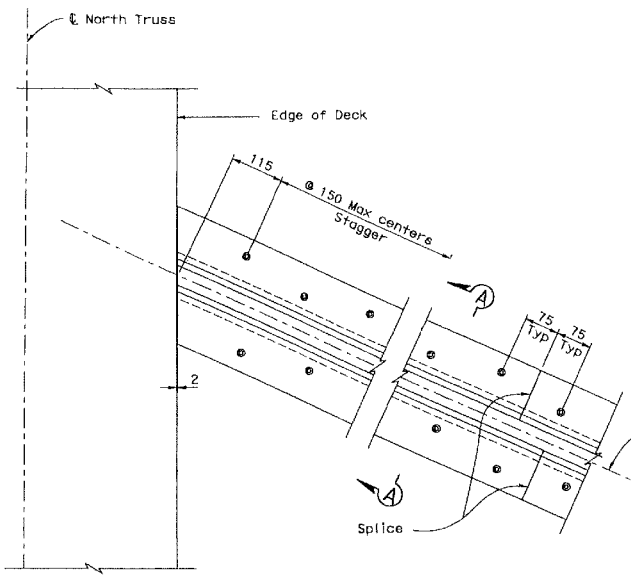

BOLT & PLATE LAYOUT - PLAN

No Scale

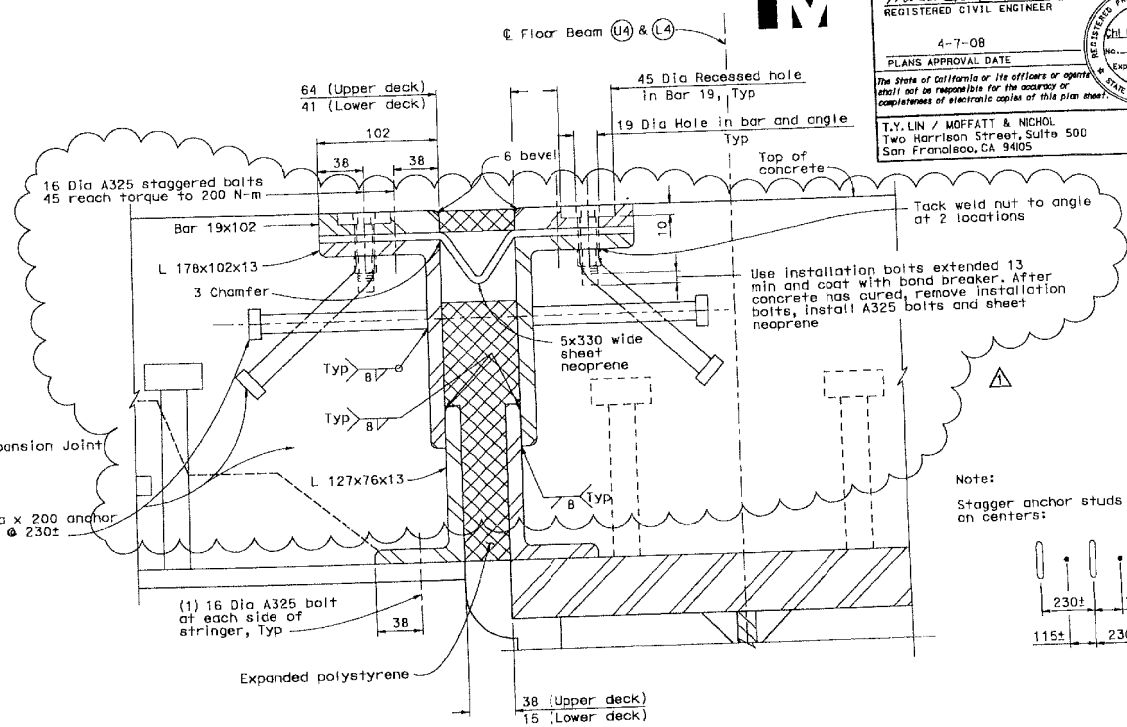

Note:
Stagger anchor studs @ 115± on centers:

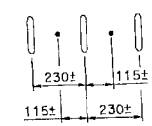

SECTION A-A

1:2

Notes:

1. Full penetration butt welds may be substituted for fillet welds on all anchor studs.
2. Alternate types of anchor studs may be permitted subject to the approval by the Engineer.
3. All metal parts to be painted or galvanized after fabrication.
4. Sheet neoprene shall be fabricated in one continuous piece or joints shall be vulcanized. Neoprene shall be fabricated to bend around corners. 25 mm holes in neoprene sheets shall be drilled or punched so that the neoprene is not distorted at the time of installation.

MARK	DATE	DESCRIPTIONS	BY	CH'D	CCO#
1	9/30/08	ELIMINATE DECK OVERLAY	MC	SA	

REVISIONS

CONTRACT CHANGE ORDER NO. 140-S2
SHEET 19 OF 20

ALL DIMENSIONS ARE IN MILLIMETERS UNLESS OTHERWISE SHOWN

SAN FRANCISCO OAKLAND BAY BRIDGE
EAST SPAN SEISMIC SAFETY PROJECT

EAST TIE-IN

JOINT SEAL ASSEMBLY

T. Ostrom/M. Whiteside/A. Akinsanya
DESIGN OVERSIGHT

SIGN OFF DATE

DESIGN DETAIL SHEET (METRIC) (REV. 3/1/98)
DATE *TIME* Pen Table File

DESIGN	BY M. Chen, K. Liu	CHECKED S. Cheng, H. Naja, H. Nelson	
DETAILS	BY S. Lee	CHECKED A. Lee	
QUANTITIES	BY H. Nelson	CHECKED A. Lee	

ORIGINAL SCALE IN MILLIMETERS FOR REDUCED PLANS 0 10 20 30 40 50 60 70 80 90 100

PREPARED FOR THE
STATE OF CALIFORNIA
DEPARTMENT OF TRANSPORTATION

M. Soh
PROJECT ENGINEER
S. Abbas
PROJECT MANAGER
CU
EA 0120R4

BRIDGE NO. 34-0006 (TEMP)
KILOMETER POST 12.6

DISREGARD PRINTS BEARING EARLIER REVISION DATES

REVISION DATES (PRELIMINARY STAGE ONLY)
11/4/07 4/7/08 9/30/08

SHEET 112R1 OF 214

FILE => p:\bb\04-012001\eti\revision 1a\akjso01.dgn

USERNAME => pzhao DATE PLOTTED => 10/7/2008 TIME PLOTTED => 11:17:47 AM FILE => p:\bb\04-012001\eti\revision 1a\akjso01.dgn

100% PS&E

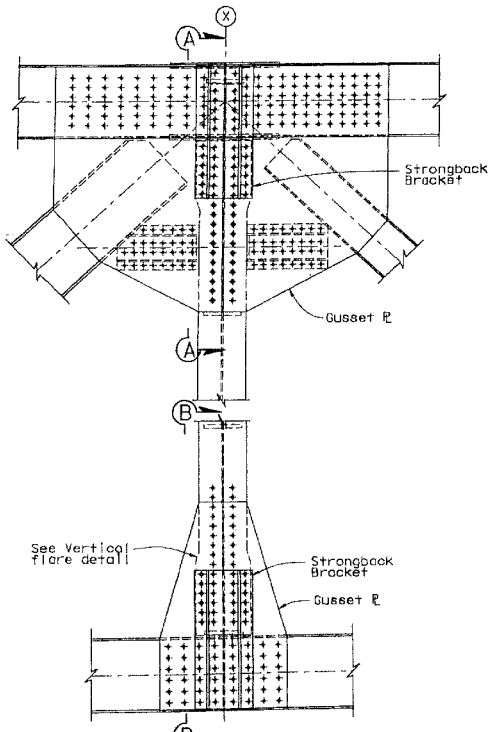

ELEVATION-TYPICAL TRUSS VERTICAL

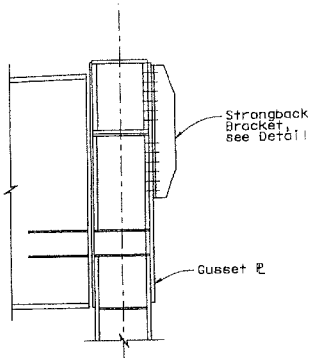

SECTION A-A

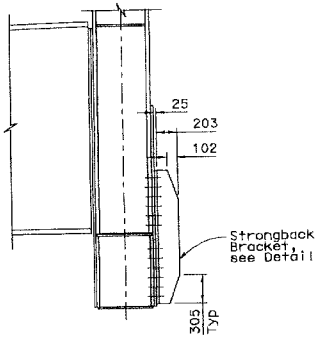

SECTION B-B

Note: Typical North and South Truss at all verticals except L0-U0 and portal frames.

STRONGBACK BRACKET
Scale 1:25

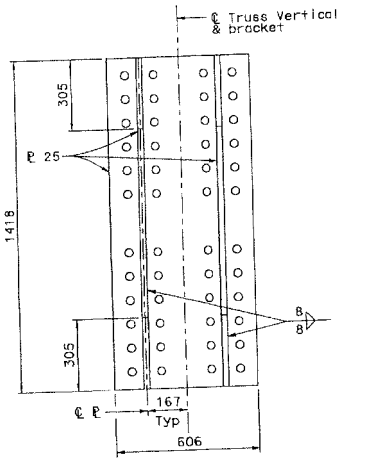

STRONGBACK BRACKET DETAIL
Scale 1:10

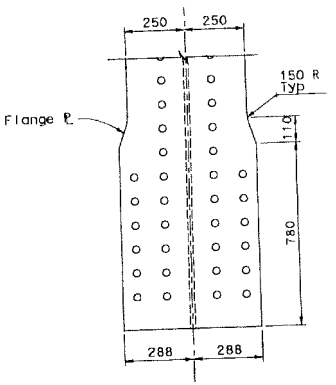

Note: Flare both ends of both flange plates of all Vertical I members except L0-U0

VERTICAL FLARE DETAIL
Scale 1:10

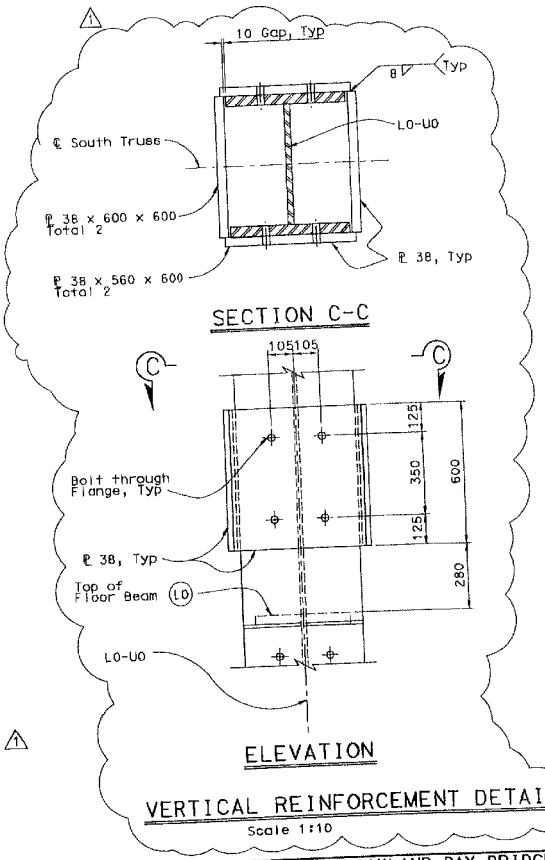

VERTICAL REINFORCEMENT DETAIL
Scale 1:10

MARK	DATE	DESCRIPTIONS	BY	CH'D	CCO#
1	7/22/08	Add Vertical Reinforcement Detail	DG	SS	

REVISIONS

CONTRACT CHANGE ORDER NO. 140-S2
SHEET 20 OF 20

ALL DIMENSIONS ARE IN MILLIMETERS UNLESS OTHERWISE SHOWN

DIST	COUNTY	ROUTE	KILOMETER POST TOTAL PROJECT	SHEET No	TOTAL
04	SF	80	12.6/13.2		

REGISTERED CIVIL ENGINEER

4-7-08
PLANS APPROVAL DATE

The State of California or its officers or agents shall not be responsible for the accuracy or completeness of electronic copies of this plan sheet.

REGISTERED PROFESSIONAL ENGINEER David Griffith No. C49125 Exp. 9/30/08 CIVIL STATE OF CALIFORNIA

T.Y. LIN / MOFFATT & NICHOL
Two Harrison Street, Suite 500
San Francisco, CA 94105

100% PS&E

FILE => p:\bb\04-012001\efl\Dgn\akmsd02.dgn
TIME PLOTTED => 4:30:28 PM
DATE PLOTTED => 7/22/2008
USERNAME => Alee

T. Ostrom/W. Whiteside/A. Akinsanya
DESIGN OVERSIGHT

SIGN OFF DATE

	BY	CHECKED
DESIGN	D. Griffith	S. Chang, H. Najm
DETAILS	V. Ortega	A. Lee
QUANTITIES	H. Nelson	A. Lee

PREPARED FOR THE STATE OF CALIFORNIA DEPARTMENT OF TRANSPORTATION

W. Sah
PROJECT ENGINEER
S. Abbas
PROJECT MANAGER

CU
EA 0120R4

BRIDGE NO. 34-0006 (TEMP)
KILOMETER POST 12.6

DISREGARD PRINTS BEARING EARLIER REVISION DATES →

REVISION DATES (PRELIMINARY STAGE ONLY)

SHEET 116 OF 214

SAN FRANCISCO OAKLAND BAY BRIDGE
EAST SPAN SEISMIC SAFETY PROJECT

EAST TIE-IN

MISCELLANEOUS DETAILS NO. 2

DESIGN DETAIL SHEET (METRIC) (REV. 3/1/98)
@DATE@ @TIME@ Pen Table File

ORIGINAL SCALE IN MILLIMETERS
FOR REDUCED PLANS 0 10 20 30 40 50 60 70 80 90 100

FILE => p:\bb\04-012001\efl\Dgn\akmsd02.dgn

STATE OF CALIFORNIA - DEPARTMENT OF TRANSPORTATION

CONTRACT CHANGE ORDER MEMORANDUM

TO: MIKE FORNER / DEANNA VILCHECK	FILE: E.A. 04 - 0120R4
	CO-RTE-PM SF-80-12.6/13.2
FROM: BILL CASEY	FED. NO. ACBRIM-080-1(097)N
CCO#: **140** SUPPLEMENT#: **2** Category Code: **CHPT**	CONTINGENCY BALANCE (incl. this change) **$47,214,796.59**
COST: **$0.00** INCREASE ☐ DECREASE ☐	HEADQUARTERS APPROVAL REQUIRED? ☐ YES ☑ NO
SUPPLEMENTAL FUNDS PROVIDED: **$0.00**	IS THIS REQUEST IN ACCORDANCE WITH ENVIRONMENTAL DOCUMENTS? ☑ YES ☐ NO
CCO DESCRIPTION: Revised ETI Truss Plan Sheets	**PROJECT DESCRIPTION:** CONSTRUCT ROUTE 80 TEMP BYPASS STRUCTURE

Original Contract Time:	Time Adj. This Change:	Previously Approved CCO Time Adjustments:	Percentage Time Adjusted: (including this change)	Total # of Unreconciled Deferred Time CCO(s): (including this change)
475 Day(s)	**DEF** Day(s)	**1195** Day(s)	**252** %	**8**

THIS CHANGE ORDER PROVIDES FOR:

incorporating design revisions to the steel truss of the East Tie-In (ETI) portion of the Temporary Bypass Structure (Bridge No. 34-0006 (TEMP)).

This project, the Temporary Bypass Structure (TBS), was awarded in March 2004 to construct a detour that will allow for the tie in of the new east span of the San Francisco Oakland Bay Bridge to Yerba Buena Island. The TBS encompasses three main structures, the East Tie-In to the existing bridge, the West Tie-In (WTI) to Yerba Buena Island, and the Viaduct structure between the two tie ins.

A December 14, 2006 Department strategy memorandum, approved by Tony Anziano, Toll Bridge Program Manager, and Richard Land, Chief Engineer, recommended that the Department assume the design responsibility for the East Tie-In (ETI) structure. Based on this memorandum, the design of the structure was changed from a design that incorporated the existing steel truss bridge with the new structure to a design that replaces the existing structure with a new structure (roll out / roll in).

The original Contract Change Order No. 140 provided the plans and specifications necessary for the construction of the steel truss of the ETI structure and provided compensation for the steel fabrication of the truss. This change order incorporates numerous revisions to the originally issued plan sheets for the truss including the elimination of the upper and lower deck wearing surfaces, revised joint details, and framing details.

An assessment of cost increases and adjustments in compensation pertaining to the fabrication of the steel truss resulting from these changes is deferred pending the identification and quantification of any added or eliminated work stemming from these changes.

Any adjustment of contract time is deferred as the change may affect the controlling operation.

This change was requested by Mike Whiteside - YBI Coordination Engineer in a memorandum dated October 8, 2008 and concurred with by Alec Melkonians - Asst. Project Manager and Hong Wong - Project Engineer.

Maintenance concurrence is not required as this change doesn't affect any permanent roadway features.

ADA Notice: For individuals with sensory disabilities, this document is available in alternate formats. For information call: (916) 654-6410 or TDD (916) 654-3880 or write Records and Forms Management, 1120 N Street, MS-89, Sacramento, CA 95814.

CONCURRED BY:		
Construction Engineer:		Date
Bridge Engineer:	Mike Whiteside, Toll Bridge Design	Date 10/8/08
Project Engineer:	Hong Wong, PE	Date 6/17/09
Project Manager:	Alec Melkonians	Date 6/16/09
FHWA Rep.:		Date
Environmental:		Date
Other (specify):		Date
Other (specify):		Date
District Prior Approval By:		Date
HQ (Issue Approve) By:	Bob Molera	Date 6/23/09
Resident Engineer's Signature:		Date
		6-15-09

ESTIMATE OF COST

	THIS REQUEST	TOTAL TO DATE
ITEMS	$0.00	$0.00
FORCE ACCOUNT	$0.00	$0.00
AGREED PRICE	$0.00	$10,920,525.00
ADJUSTMENT	$0.00	$300,000.00
TOTAL	$0.00	$11,220,525.00

FEDERAL PARTICIPATION

☐ PARTICIPATING ☐ PARTICIPATING IN PART ☑ NONE
☐ NON-PARTICIPATING (MAINTENANCE) ☐ NON-PARTICIPATING

FEDERAL SEGREGATION (if more than one Funding Source or P.I.P. type)
☐ CCO FUNDED PER CONTRACT ☐ CCO FUNDED AS FOLLOWS

FEDERAL FUNDING SOURCE	PERCENT

ADA Notice: For individuals with sensory disabilities, this document is available in alternate formats. For information call: (916) 654-6410 or TDD (916) 654-3880 or write Records and Forms Management, 1120 N Street, MS-89, Sacramento, CA 95814.

CONTRACT CHANGE ORDER

Change Requested by: Engineer

CCO 141	Suppl. No. 0	Contract No. 04 - 0120R4	Road SF-80-12.6/13.2	FED. AID LOC.: ACBRIM-080-1(097)N

To: **CC MYERS INC**

You are directed to make the following changes from the plans and specifications or do the following described work not included in the plans and specifications for this contract. ***NOTE: This change order is not effective until approved by the Engineer.***

Description of work to be done, estimate of quantities and prices to be paid. (Segregate between additional work at contract price, agreed price and force account.) Unless otherwise stated, rates for rental of equipment cover only such time as equipment is actually used and no allowance will be made for idle time. This last percentage shown is the net accumulated increase or decrease from the original quantity in the Engineer's Estimate.

Extra Work at Force Account:

Provide daily monitoring of the south edge as specified under this change order and as determined by the Engineer.

Perform all adjustments to the bent caps as required under Stage 5 "Bent Adjustment" of the construction staging plans in accordance with the specified "Bent Cap Adjustment Procedure" and as determined by the Engineer.

Perform final post tension lock off of the right column prestress bars in accordance with Stage 5 "Bent Adjustment" of the construction staging plans and as determined by the Engineer.

Estimated Cost of Extra Work at Force Account $500,000.00

Extra Work at Lump Sum:

Perform the following work for the construction of the West Tie-In Phase 2 superstructure of the Temporary Bypass Structure (Bridge No. 34-0006 (TEMP)) in accordance with the plans and specifications shown on Pages No. 3 through 68 of this change order and the specifications shown on Pages No. 3 through 203 of Change Order No. 108:

1) Construct Frame No. 1, Frame No. 2 and Frame No. 3 including all appurtenances.

2) Construct the WTI Edge Beam and the YBI Viaduct South Edge Beam Corbel including all appurtenances.

3) Construct the Bent 38 and the reinforced concrete slab supported by the bent including all appurtenances.

4) Construct all Type 60SA (Modified) and Type 732 concrete barriers including electrolier bases.

5) Furnish and install all jacking systems and load cells on the jacking corbels at the South Edge Beam and Column 46L locations and at the WTI Right Column locations as specified.

6) Place shoring towers and perform all jacking and stressing operations as specified in Stage 2 "Superstructure", Stage 3 "Jacks and Load Cell Installation and Stage 4 "Hinge Corbel Construction and Post Tensioning" of the construction staging plans.

7) Perform the bridge removal of the existing PCC roadway slab and soil nail wall and perform all structure excavation necessary for the construction of the reinforced concrete slab supported by Bent 38.

8) Perform bridge removal (portion) of the existing Columns 40, 41A, 41B and 42.

9) Provide all traffic control, excluding flagging costs as specified herein, necessary for the work of this change order.

For this work, the Contractor shall be compensated a lump sum of $12,700,000.00. Except for the items of work specifically excluded below, this sum constitutes full and final compensation, including all markups, for all costs associated with the work of this change.

All work associated with the implementation and maintenance of the Contractor's Storm Water Pollution Prevention Plan and erosion control, including concrete washouts, shall be paid by the Department separately from this change order.

CONTRACT CHANGE ORDER

Change Requested by: Engineer

CCO 141	Suppl. No. 0	Contract No. 04 - 0120R4	Road SF-80-12.6/13.2	FED. AID LOC.: ACBRIM-080-1(097)N

All work associated with furnishing and installing all luminaires, cable trays and strut channels for the structures lighting and utilities is excluded from this change order and shall be paid separately.

Flagging costs associated with this work shall be paid under Change Order No. 1 with these costs being paid at 50% by the Department. The remaining flagging costs are considered to be included in the lump sum payment made under this change order.

Should the Department require an engineered bridge removal plan for the work of this change, those costs shall be paid under a separate change order.

Consideration of a time adjustment will be deferred until completion of the work specified herein. Determination of a commensurate time extension will be made in accordance with Section 8-1.07, "Liquidated Damages", of the Standard Specifications and Section 10-1.20 "Time Related Overhead (TRO)" of the Special Provisions.

Compensation for delays resulting from this work will be made in accordance with Section 8-1.09 "Right of Way Delays" of the Standard Specifications and Section 10-1.20 "Time Related Overhead" of the Special Provisions.

Total Cost of Extra Work at Lump Sum $12,700,000.00

The lump sum payment provided herein is based on the Frame 1 load transfer assurance plan beginning on July 1, 2009. The Contractor shall be paid an incentive of $30,000.00 for each calendar day prior to July 1, 2009 that this load transfer assurance plan can begin. In the event the load transfer assurance plan begins after that date, the Contractor shall credit the Department a disincentive of $30,000.00 for each calendar day after July 1, 2009 that the load transfer assurance plan begins. Any incentive payment or disincentive credit shall not exceed $1,500,000.00 and shall be provided under a supplemental change order.

For the purpose of this incentive / disincentive, the beginning of the load transfer assurance plan shall be defined as the date the Frame 1 falsework release is completed under Item No. 1 "Remove Falsework" as specified under Stage 5 "Bent Adjustment" of the construction staging plans. Release of this falsework shall not apply to falsework associated with Frame 1 east of the planned construction joint between Bent 46 and Bent 47.

All payment clauses contained within the specifications of this change order are superseded by the agreed lump sum and force account payment methods specified above.

Estimated Cost: Increase ☑ Decrease ☐ **$13,200,000.00**

By reason of this order the time of completion will be adjusted as follows: Deferred

Submitted by

Signature	Resident Engineer	Date
	BILL CASEY	11-10-09

Approval Recommended by

Signature	SFOBB Construction Manager	Date
	for MIKE FORNER	11/12/09

Engineer Approval by

Signature	SFOBB Construction Manager	Date
	for MIKE FORNER	11/24/09

We the undersigned contractor, have given careful consideration to the change proposed and agree, if this proposal is approved, that we will provide all equipment, furnish the materials, except as may otherwise be noted above, and perform all services necessary for the work above specified, and will accept as full payment therefor the prices shown above.

NOTE: If you, the contractor, do not sign acceptance of this order, your attention is directed to the requirements of the specifications as to proceeding with the ordered work and filing a written protest within the time therein specified.

Contractor Acceptance by

Signature	(Print name and title)	Date
	DANIEL E. HAMICK, PRESIDENT	11/19/09

STATE OF CALIFORNIA - DEPARTMENT OF TRANSPORTATION

CONTRACT CHANGE ORDER

Change Requested by: Engineer

CCO 141	Suppl. No. 1	Contract No. 04 - 0120R4	Road SF-80-12.6/13.2	FED. AID LOC.: ACBRIM-080-1(097)N

To: CC MYERS INC

You are directed to make the following changes from the plans and specifications or do the following described work not included in the plans and specifications for this contract. ***NOTE: This change order is not effective until approved by the Engineer.***

Description of work to be done, estimate of quantities and prices to be paid. (Segregate between additional work at contract price, agreed price and force account.) Unless otherwise stated, rates for rental of equipment cover only such time as equipment is actually used and no allowance will be made for idle time. This last percentage shown is the net accumulated increase or decrease from the original quantity in the Engineer's Estimate.

Adjustment of Compensation at Unit Price:

Provide payment for contractor incentives for early completion of the construction work as specified in Contract Change Order No. 141 as related to the West Tie-In Phase 2 superstructure of the Temporary Bypass Structure (Bridge # 34-0006 (TEMP)).

50 days @ $30,000/day = $1,500,000.00

Total Cost of Adjustment of Compensation at Agreed Unit Price $1,500,000.00

RECEIVED
090526 JUN 12 09

Estimated Cost: Increase ☑ Decrease ☐ $1,500,000.00

By reason of this order the time of completion will be adjusted as follows: DEFFERED

Submitted by

Signature	Resident Engineer	Date
	BILL CASEY	5-14-09

Approval Recommended by

Signature	SFOBB Construction Manager	Date
Mike Forner	MIKE FORNER	5-15-09

Engineer Approval by

Signature	SFOBB Construction Manager	Date
Mike Forner	MIKE FORNER	5-15-09

We the undersigned contractor, have given careful consideration to the change proposed and agree, if this proposal is approved, that we will provide all equipment, furnish the materials, except as may otherwise be noted above, and perform all services necessary for the work above specified, and will accept as full payment therefor the prices shown above.

NOTE: If you, the contractor, do not sign acceptance of this order, your attention is directed to the requirements of the specifications as to proceeding with the ordered work and filing a written protest within the time therein specified.

Contractor Acceptance by

Signature	(Print name and title)	Date
N/A	N/A	N/A

Frame 1 CIP reinforced concrete slab with P/S bent caps (Upper Deck)
Frame 2 CIP reinforced concrete box girder with P/S bent caps (Upper Deck)
Frame 3 CIP reinforced concrete slab (Lower Deck)
For notes and Legend see "General Plan Notes" sheet

CONTRACT CHANGE ORDER NO. 141
SHEET 1 OF 21

MARK	DATE	REVISION(S) DESCRIPTIONS	DES	CHK	DET
3	08-11-08	Existing utility vault filled with conc	CD	MC	GS
2	03-26-08	Begin concrete railing	CD	MC	GS
1	03-26-08	Deck Drainage	CD	MC	GS

REGISTERED CIVIL ENGINEER: DATE:

DIST	COUNTY	ROUTE	KILOMETER POST TOTAL PROJECT	SHEET No	TOTAL SHEETS
04	SF	80	12.6/13.2		

M.J. Cullen 08-11-08
REGISTERED CIVIL ENGINEER DATE

PLANS APPROVAL DATE

The State of California or its officers or agents shall not be responsible for the accuracy or completeness of electronic copies of this plan sheet.

REGISTERED PROFESSIONAL ENGINEER M. J. CULLEN No. C 40620 Exp. 03-31-09 CIVIL STATE OF CALIFORNIA

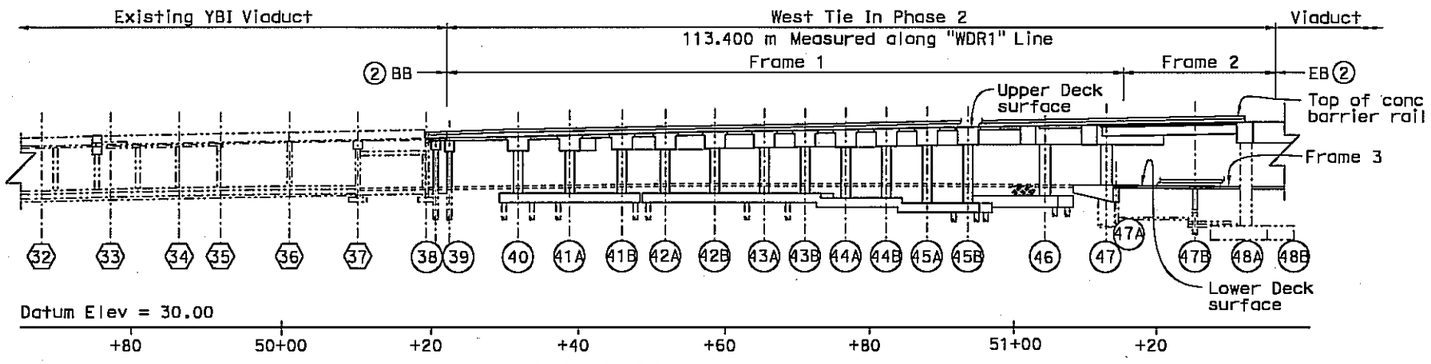

ELEVATION
1:400

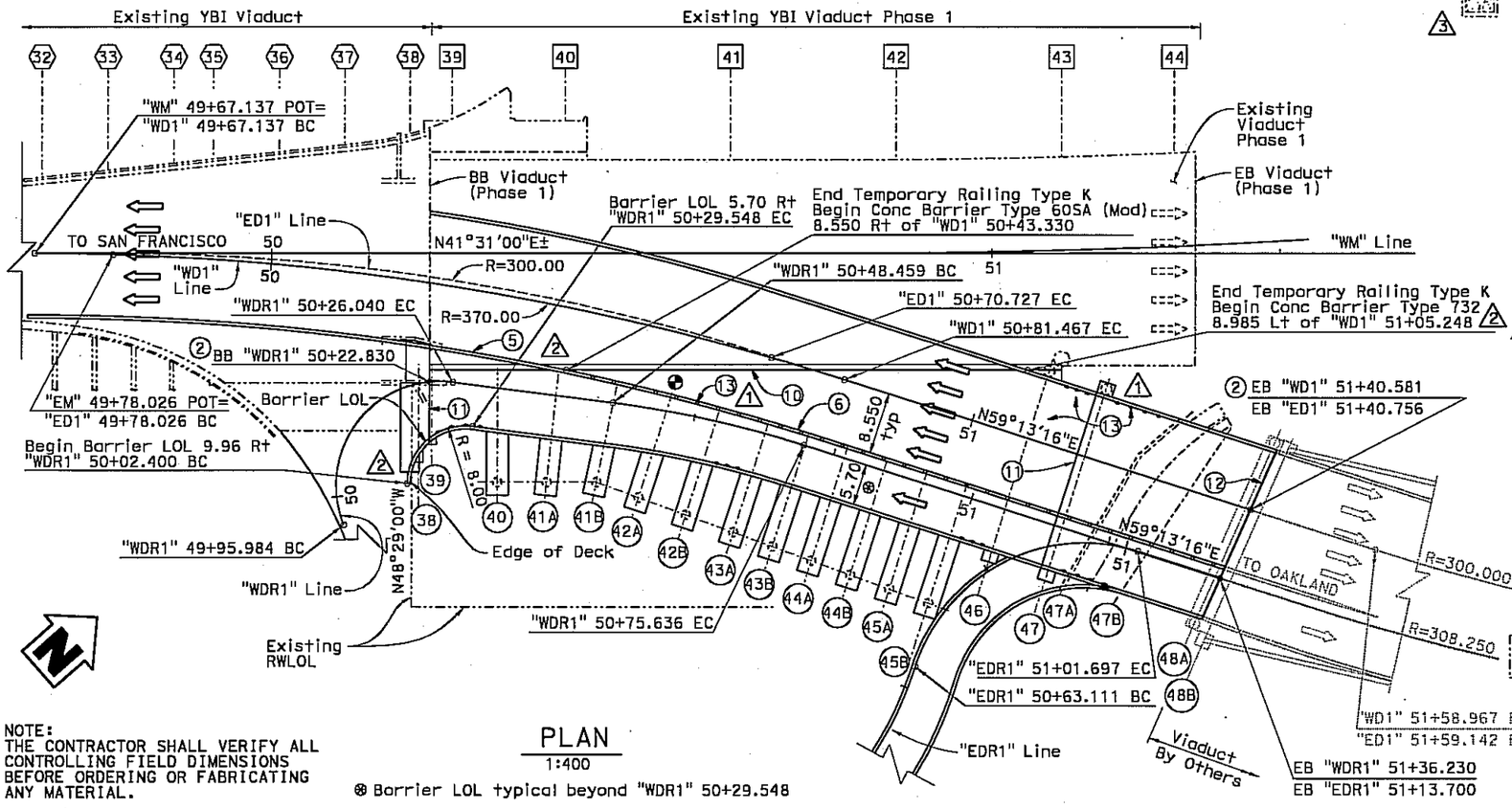

PLAN
1:400

⊛ Barrier LOL typical beyond "WDR1" 50+29.548

NOTE:
THE CONTRACTOR SHALL VERIFY ALL CONTROLLING FIELD DIMENSIONS BEFORE ORDERING OR FABRICATING ANY MATERIAL.

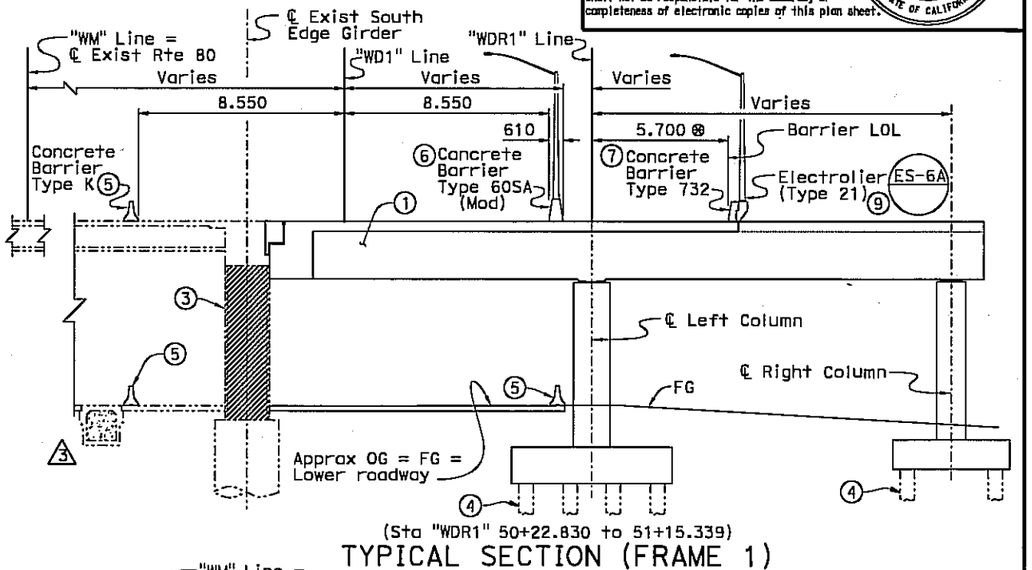

(Sta "WDR1" 50+22.830 to 51+15.339)
TYPICAL SECTION (FRAME 1)
1:125

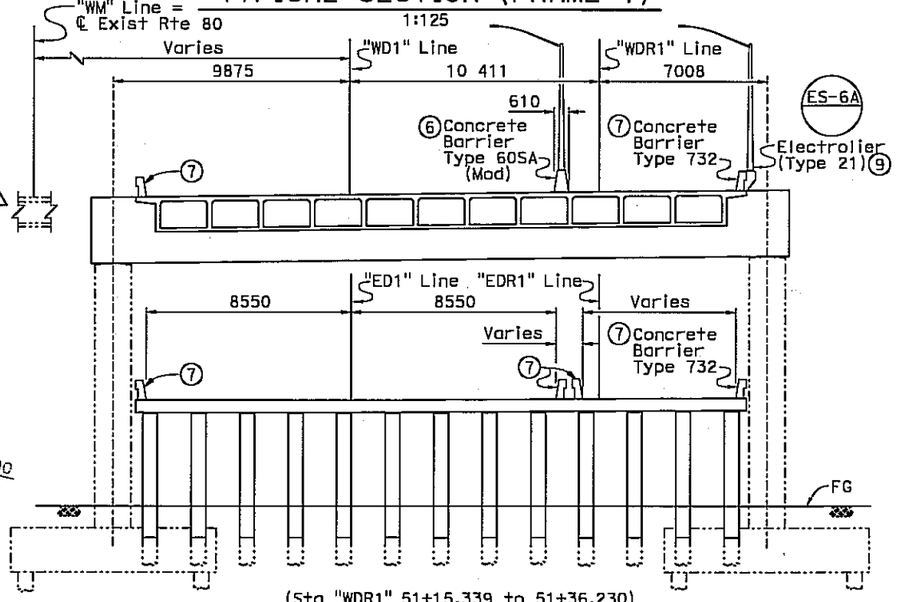

(Sta "WDR1" 51+15.339 to 51+36.230)
TYPICAL SECTION (FRAMES 2 & 3)
1:125

Caltrans Metric	DESIGN ENGINEER	DESIGN	BY C. M. Duan	CHECKED G.Schuster/M.Cullen	LOAD FACTOR DESIGN	LIVE LOADING: HS20-44 AND ALTERNATIVE AND PERMIT DESIGN LOAD	STATE OF CALIFORNIA DEPARTMENT OF TRANSPORTATION	DIVISION OF ENGINEERING SERVICES STRUCTURE DESIGN	BRIDGE NO. 34-0006
		DETAILS	BY G. M. Souza/SJ/TC	CHECKED M.Cullen/G.Schuster	LAYOUT	BY C. M. Duan / CHECKED M. J. Cullen		DESIGN BRANCH 5	KILOMETER POST 12.6
		QUANTITIES	BY C. M. Duan	CHECKED M. J. Cullen	SPECIFICATIONS	BY S. Margaris / PLANS AND SPECS COMPARED S. Margaris		CU 04251 EA 0120P1	

ALL DIMENSIONS ARE IN METERS UNLESS OTHERWISE SHOWN

ORIGINAL SCALE IN MILLIMETERS FOR REDUCED PLANS 0 10 20 30 40 50 60 70 80 90 100

FILE => 34-0006-a-gp_r2.dgn

DISREGARD PRINTS BEARING EARLIER REVISION DATES → REVISION DATES 01-12-01 | 01-15-08 | 02-01-08 | 02-14-08 | 03-04-08 | 03-11-08 | 10-01-01 | 10-25-01 | 01-11-08

SHEET 1R2 OF 64

STRUCTURES DESIGN GENERAL PLAN SHEET (METRIC) (REV.07-24-06)

WEST TIE IN PHASE 2
SOUTH - SOUTH DETOUR
GENERAL PLAN

DATE PLOTTED => 14-AUG-2008 TIME PLOTTED => 11:06
USERNAME => GBOUZO

DIST	COUNTY	ROUTE	KILOMETER POST TOTAL PROJECT	SHEET No	TOTAL SHEETS
04	SF	80	12.6/13.2		

M J Cullen 08-11-08
REGISTERED CIVIL ENGINEER DATE

PLANS APPROVAL DATE

The State of California or its officers or agents shall not be responsible for the accuracy or completeness of electronic copies of this plan sheet.

REGISTERED PROFESSIONAL ENGINEER — M. J. CULLEN — No. C 40620 — Exp. 03-31-09 — CIVIL — STATE OF CALIFORNIA

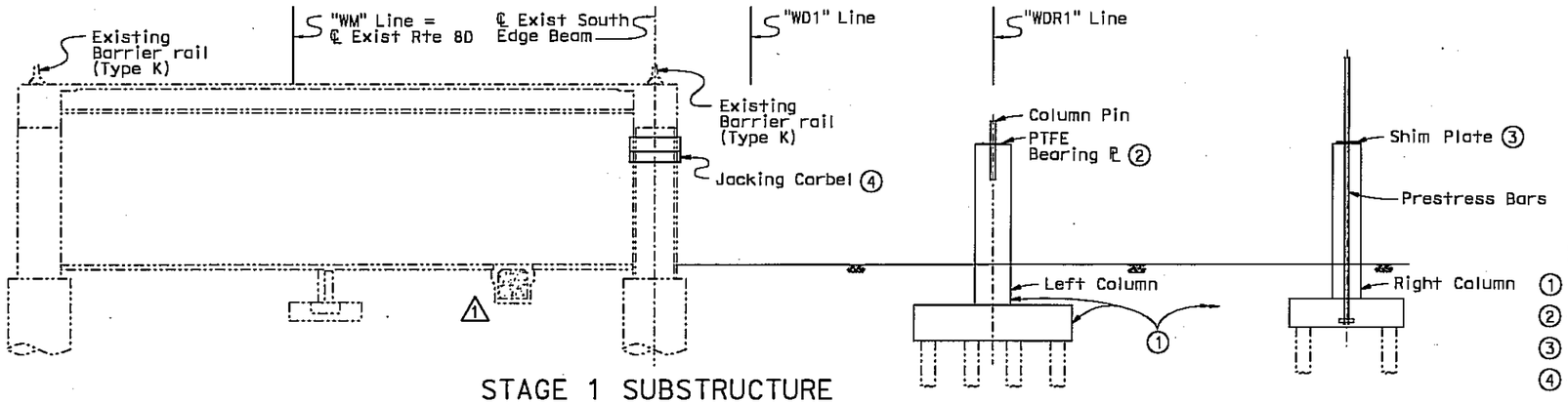

STAGE 1 SUBSTRUCTURE

no scale

STAGE 1: SUBSTRUCTURE

(1) - Construct Footings and Columns.

(2) - Place PTFE Bearing Plates on top of Left Column.

(3) - Place Shim Plates on top of Right Column.

(4) - Construct Jacking Corbels on Existing YBI Viaduct Columns 40, 41A, 41B and 42.

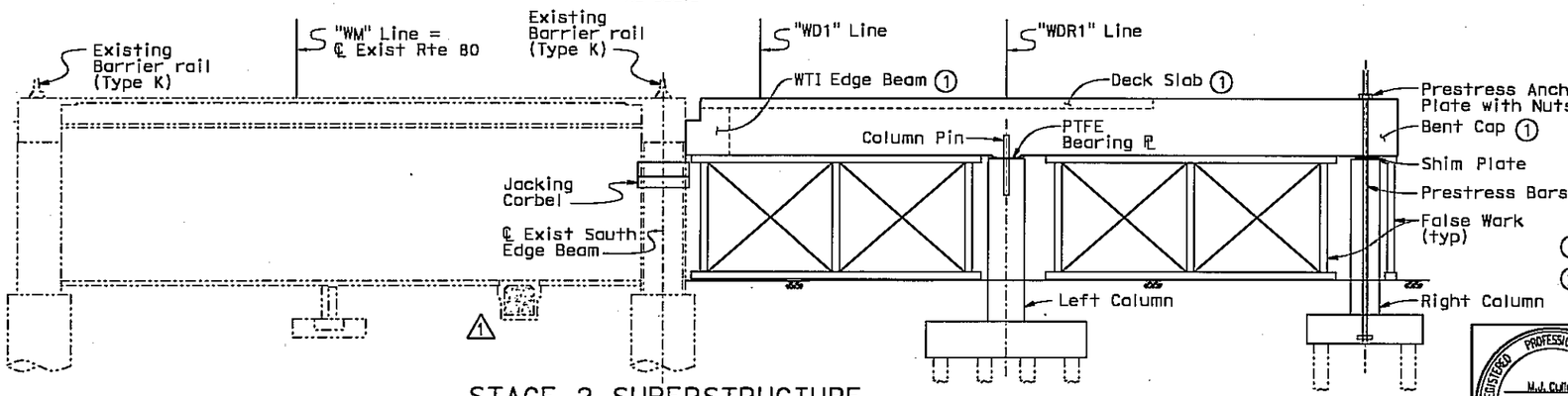

STAGE 2 SUPERSTRUCTURE

no scale

STAGE 2: SUPERSTRUCTURE

(1) - Construct WTI Bent Caps, Deck Slabs and Edge Beam.

(2) - At right columns, place prestress anchor plates and tighten each nut to 425 N-m torque to remove slack.

CONTRACT CHANGE ORDER NO. 141
SHEET 2 OF 21

MARK	DATE	REVISION(S) DESCRIPTIONS	DES	CHK	DET
1	08-11-08	Existing utility vault filled with conc	CD	MC	GS

REGISTERED CIVIL ENGINEER: DATE:

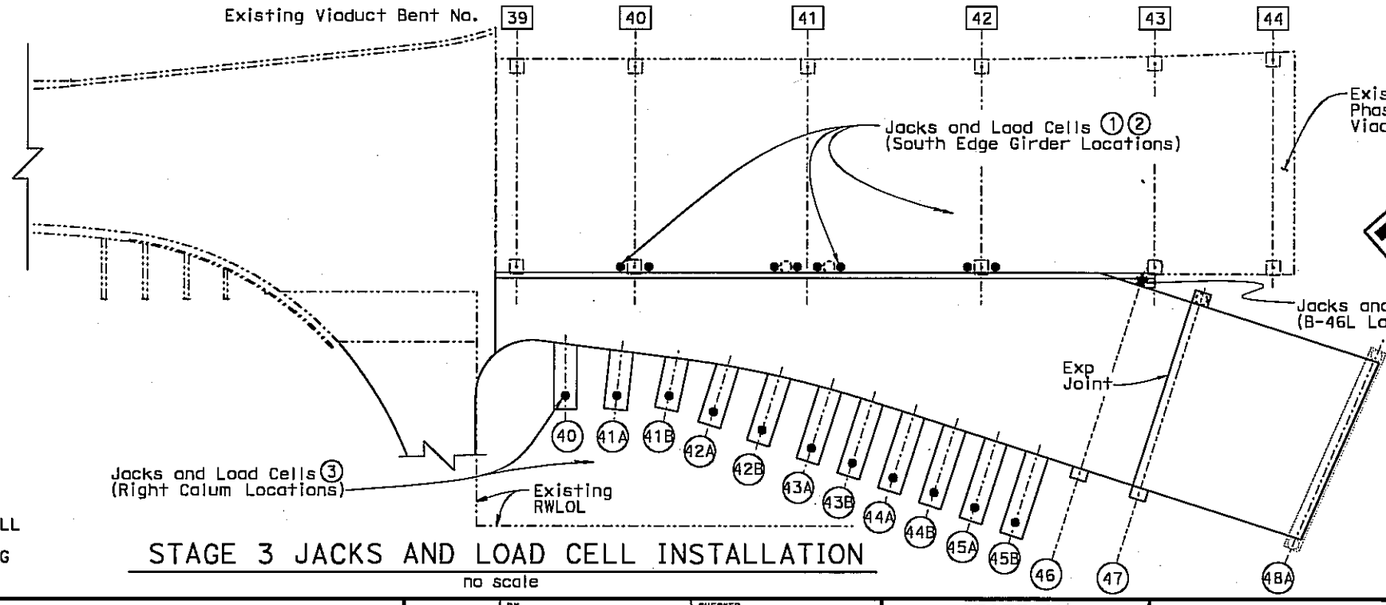

STAGE 3 JACKS AND LOAD CELL INSTALLATION

no scale

STAGE 3: JACKS AND LOAD CELL INSTALLATION

(1) - Install Jacks and Load Cells on Jacking Corbels at South Edge Beam locations.

(2) - Jack Up South Edge Beam in accordance with "Existing YBI Viaduct Jacking Plan" on "Construction Details No. 1" sheet. Install Shoring Towers.

(3) - Install Jacks and Load Cells at WTI Right Column Locations. Jack 25 kN of Force onto Prestress Bars to remove Slack. Lock Jacks rigid. Retighten lower anchor nuts to 425 N-m torque. to reseat the anchor plates

(4) - Install Jacks and Load Cells on Jacking Corbels on Column 46L at B-46L Location. Jack 25 kN of Force onto Jacking Corbels to adequatly seat the Jack. Lock Jacks rigid.

Note:

- Indicates location of Jacks and Load Cells

NOTE:
THE CONTRACTOR SHALL VERIFY ALL CONTROLLING FIELD DIMENSIONS BEFORE ORDERING OR FABRICATING ANY MATERIAL.

Caltrans Metric

	BY	CHECKED
DESIGN	C. M. Duan	M. J. Cullen
DETAILS	G. M. Souza	M. J. Cullen
QUANTITIES	C. M. Duan	M. J. Cullen

STATE OF CALIFORNIA
DEPARTMENT OF TRANSPORTATION

DIVISION OF ENGINEERING SERVICES
STRUCTURE DESIGN
DESIGN BRANCH 5

BRIDGE NO. 34-0006
KILOMETER POST 12.6

WEST TIE IN PHASE 2
SOUTH - SOUTH DETOUR
CONSTRUCTION STAGING PLAN NO. 1

ALL DIMENSIONS ARE IN MILLIMETERS UNLESS OTHERWISE SHOWN

ORIGINAL SCALE IN MILLIMETERS FOR REDUCED PLANS 0 10 20 30 40 50 60 70 80 90 100

CU 04251
EA 0120P1

DISREGARD PRINTS BEARING EARLIER REVISION DATES

REVISION DATES: 01-23-08 | 02-01-08 | 02-22-08 | 08-11-08

SHEET 4R1 OF 64

FILE => 34-0006-c-const_staging_plan01_r1.dgn

STRUCTURES DESIGN DETAIL SHEET (METRIC) (REV.03-17-04)

DATE PLOTTED => 14-AUG-2008 TIME PLOTTED => 11:08
USERNAME => dsouza

DIST	COUNTY	ROUTE	KILOMETER POST TOTAL PROJECT	SHEET No	TOTAL SHEETS
04	SF	80	12.6/13.2		

08-11-08
REGISTERED CIVIL ENGINEER DATE

PLANS APPROVAL DATE

The State of California or its officers or agents shall not be responsible for the accuracy or completeness of electronic copies of this plan sheet.

REGISTERED PROFESSIONAL ENGINEER
M. J. CULLEN
No. C 40620
Exp. 03-31-09
CIVIL
STATE OF CALIFORNIA

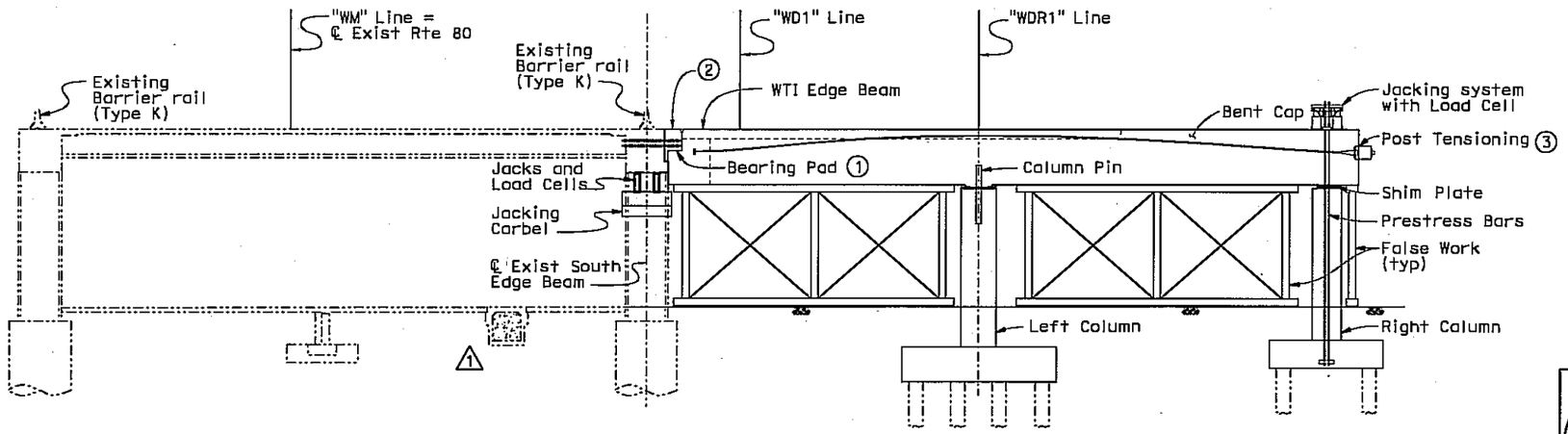

SEQUENCE 4 PRESTRESSING
no scale

STAGE 4: HINGE CORBEL CONSTRUCTION AND POST TENSIONING

① - Place Bearing Pads on WTI Edge Beam. If required adjust Grade of YBISEB as directed by the Engineer.

② - Construct South Edge Beam Hinge Corbel in accordance with "YBI Viaduct South Edge Beam Corbel Construction Plan" on "Construction Details No. 2" sheet. (Traffic Control Required)

③ - Perform Post-Tensioning of Bent Caps in accordance with "Post Tensioning Plan" on "Construction Details No. 2" sheet.

REGISTERED PROFESSIONAL ENGINEER
M.J. Cullen
No. C 40620
Exp. 03-31-09
CIVIL
STATE OF CALIFORNIA

MARK	DATE	REVISION(S) DESCRIPTIONS	DES	CHK	DET
1	08-11-08	Existing utility vault filled with conc	CD	MC	GS

REGISTERED CIVIL ENGINEER: DATE:

CONTRACT CHANGE ORDER NO. 141
SHEET 3 OF 21

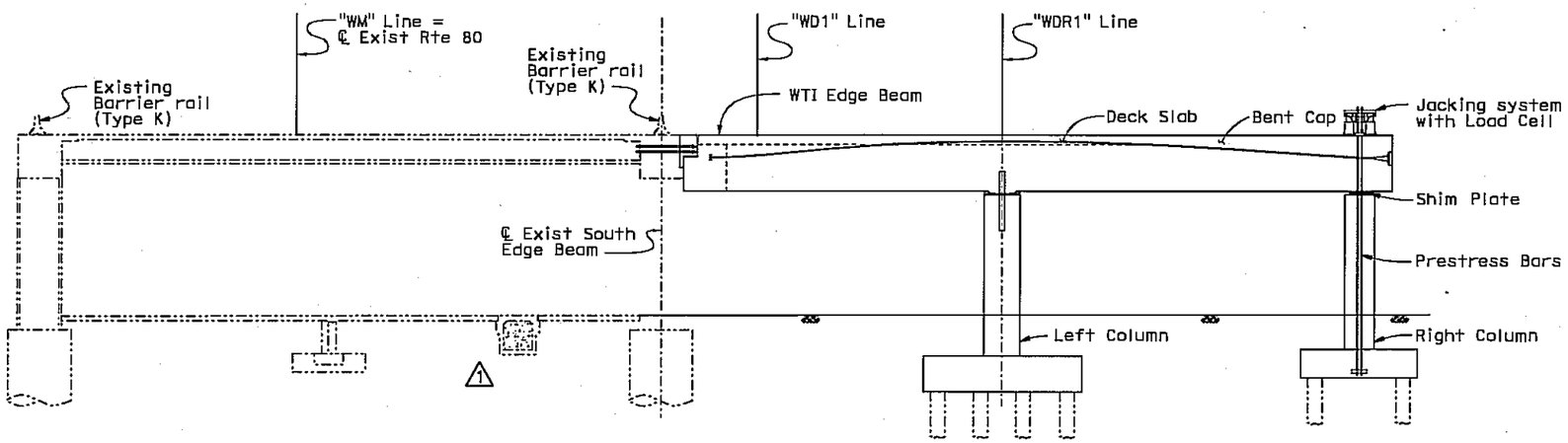

SEQUENCE 5 ADJUSTMENT
no scale

STAGE 5: BENT ADJUSTMENT

① - Remove Falsework.

② - Check Load Cell Readings. Check Edge Beam Grades. See "Load Transfer Assurance Plan" on "Construction Details No. 2" sheet.

③ - If required, Adjust Bents in accordance with "Bent Cap Adjustment Procedure" until Load Cell Readings and Edge Beam Grades are accepted by the Engineer. See "Column Details No. 2" sheet.

④ - Perform Final Post Tension Lock off of Right Column Prestress Bars. See "Column Details No. 2" sheet.

⑤ - Remove Existing Columns 40, 41A, 41B and 42 in YBI Viaduct Phase 1.

NOTE:
THE CONTRACTOR SHALL VERIFY ALL CONTROLLING FIELD DIMENSIONS BEFORE ORDERING OR FABRICATING ANY MATERIAL.

Caltrans Metric

	BY	CHECKED
DESIGN	C. M. Duan	M. J. Cullen
DETAILS	G. M. Souza	M. J. Cullen
QUANTITIES	C. M. Duan	M. J. Cullen

STATE OF CALIFORNIA
DEPARTMENT OF TRANSPORTATION

DIVISION OF ENGINEERING SERVICES
STRUCTURE DESIGN
DESIGN BRANCH 5

BRIDGE NO. 34-0006
KILOMETER POST 12.6

WEST TIE IN PHASE 2
SOUTH - SOUTH DETOUR
CONSTRUCTION STAGING PLAN NO. 2

ALL DIMENSIONS ARE IN MILLIMETERS UNLESS OTHERWISE SHOWN

ORIGINAL SCALE IN MILLIMETERS FOR REDUCED PLANS 0 10 20 30 40 50 60 70 80 90 100

CU 04251
EA 0120P1

DISREGARD PRINTS BEARING EARLIER REVISION DATES

REVISION DATES: 01-24-08 | 02-01-08 | 02-22-08 | 08-11-08

SHEET 5R1 OF 64

FILE => 34-0006-c-const_staging_plan02_r1.dgn

STRUCTURES DESIGN DETAIL SHEET (METRIC) (REV.03-17-04)

USERNAME => gsouza DATE PLOTTED => 14-AUG-2008 TIME PLOTTED => 11:09

DIST	COUNTY	ROUTE	KILOMETER POST TOTAL PROJECT	SHEET No	TOTAL SHEETS
04	SF	80	12.6/13.2		

M.J. Cullen 08-11-08
REGISTERED CIVIL ENGINEER DATE

PLANS APPROVAL DATE

The State of California or its officers or agents shall not be responsible for the accuracy or completeness of electronic copies of this plan sheet.

REGISTERED PROFESSIONAL ENGINEER M. J. CULLEN No. C 40620 Exp. 03-31-09 CIVIL STATE OF CALIFORNIA

MARK	DATE	REVISION(S) DESCRIPTIONS	DES	CHK	DET
1	08-11-08	Existing utility vault filled with conc	CD	MC	GS

REGISTERED CIVIL ENGINEER: DATE:

CONTRACT CHANGE ORDER NO. 141
SHEET 4 OF 21

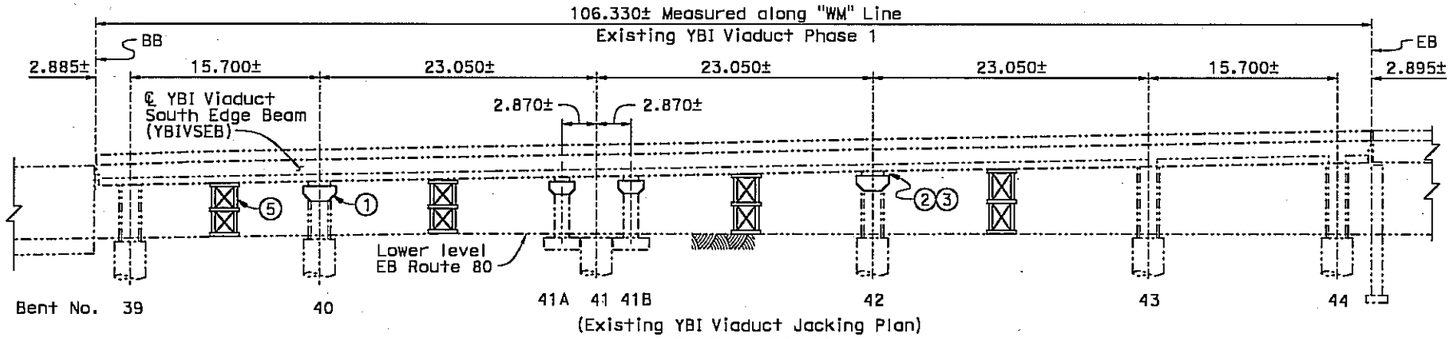

(Existing YBI Viaduct Jacking Plan)

ELEVATION
1:250

EXISTING YBI VIADUCT JACKING PLAN

Note:

Contractor shall submit a jacking and load monitoring plan to the Engineer for approval.

Jacking procedure shall be completed prior to construction of YBI Viaduct South Edge Beam Corbel and prior to post tensioning of WTI Bents 40 through 46.

① Construct Jacking Corbels, see "Column Modifications" sheet

② Place Jacks with load cells attached.

Each Jack shall be equipped with a Load Cell.

Load Cells shall be supplied by the Contractor and approved by Caltrans.

Load Cells shall be capable of continuously reporting loadings for the period the Jacks are in place.

Jacks shall be capable of being locked off and remain rigid (after desired load transfer has been accomplished) for the duration of the period they are in place. Jacks shall be approved by Caltrans.

③ Jacking Procedure, see "Jacking Load Table" for estimated dead load reactions at each jacking location

A) Bent 40

Jack YBI Viaduct South Edge Beam (YBIVSEB) until a 5 mm separation between YBIVSEB and Bearing Pads at Bent 40 has been achieved.

Assuming four Jacks per Column will be used;

Loads shall be applied in 400 kN intervals and the loads in each Jack shall never differ by more than 400 kN.

When the 5 mm separation has been achieved, the loadings in all four Jacks shall be similar within 5%. When the 5 mm separation and the balance loading has been achieved the Jacks shall be locked rigid.

B) Bent 42

Repeat jacking procedure as outlined for Bent 40.

C) Bent 41A and 41B

Bents 41A and 41B shall be jacked simultaneously.
Repeat jacking procedure as outlined for Bent 40 with the following differences:

Loads shall be applied in 200 kN intervals and the loads in each Jack shall never differ by more than 200 kN.

④ After all Jacks have been locked rigid, Load Cells and YBIVSEB profile shall be monitored daily to assure Jacks remain rigid and profile remains consistent. Adjustment of Jacks may be required to mitigate settlement or loss of hydraulic pressure as directed by the Engineer.

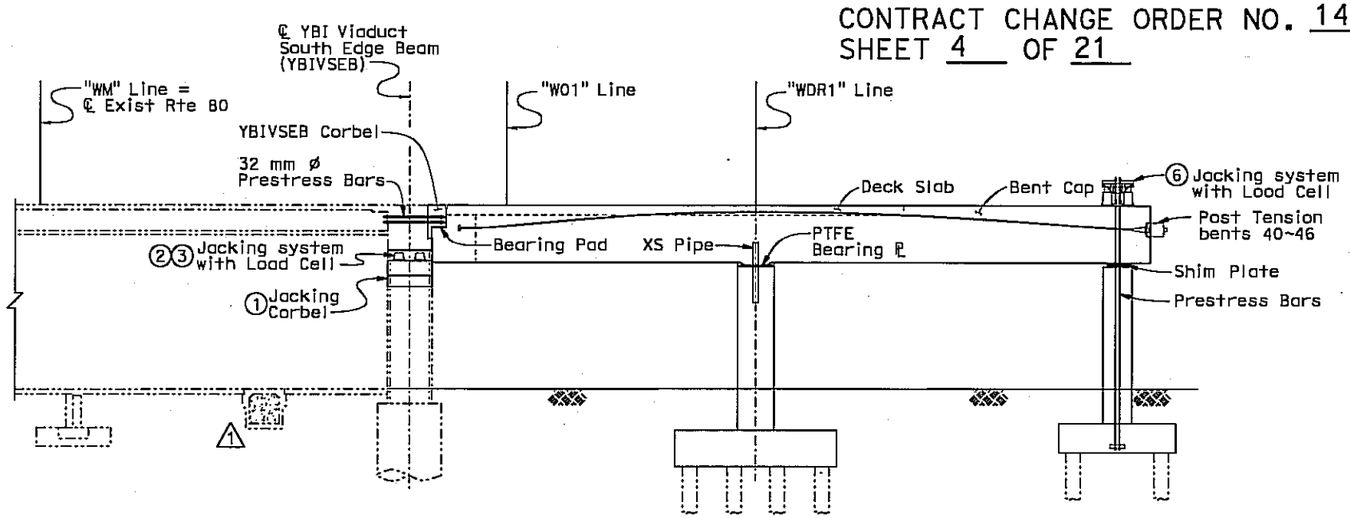

TYPICAL SECTION
no scale

⑤ Place Shoring Towers under YBIVSEB at midspan in spans shown on diagram.

Preload Shoring Tower as directed in Structure Specifications.

Place Shim Plates between Shoring Towers and YBIVSEB and shim tight. Remove Jacks on Shoring Towers.

Shoring Towers shall be designed to carry 450 kN loading with no more than 3 mm of deflection.

The Shoring Tower load capacity shall be greater than 1320 kN.

⑥ Place Jacks with Load Cells at WTI Right Column locations.
Jack 25 kN of force onto Prestress Bars to remove slack.
Lock Jacks rigid.
Retighten lower anchor nuts to 425 N-m of torque to reseat the anchor plates.

⑦ Place Jacks with Load Cells at Bent 46 Left Column Jacking Corbel.
Jack to 25 kN of force on Jacking Corbels.
Lock Jacks rigid.

JACKING LOAD TABLE

YBI VIADUCT BENT	⊛ DEAD LOAD REACTION (kN)
40	4800
41A	2700
41B	2700
42	5400

⊛ Dead Load Reported is unfactored. Live Loads can be assumed to be as high as 40% of the Dead Load Reaction.

NOTE:
THE CONTRACTOR SHALL VERIFY ALL CONTROLLING FIELD DIMENSIONS BEFORE ORDERING OR FABRICATING ANY MATERIAL.

		BY	CHECKED
DESIGN		M. J. Cullen	C. M. Duan
DETAILS		G. M. Souza	C. M. Duan
QUANTITIES		C. M. Duan	M. J. Cullen

STATE OF CALIFORNIA
DEPARTMENT OF TRANSPORTATION

DIVISION OF ENGINEERING SERVICES
STRUCTURE DESIGN
DESIGN BRANCH 5

BRIDGE NO. 34-0006
KILOMETER POST 12.6

WEST TIE IN PHASE 2
SOUTH - SOUTH DETOUR
CONSTRUCTION DETAILS NO. 1

ALL DIMENSIONS ARE IN MILLIMETERS UNLESS OTHERWISE SHOWN

ORIGINAL SCALE IN MILLIMETERS FOR REDUCED PLANS 0 10 20 30 40 50 60 70 80 90 100

CU 04251
EA 0120P1

DISREGARD PRINTS BEARING EARLIER REVISION DATES →

REVISION DATES: 01-30-08 | 02-01-08 | 02-12-08 | 08-11-08

SHEET 6R1 OF 64

FILE => 34-0006-c-const-details01_r1.dgn

STRUCTURES DESIGN DETAIL SHEET (METRIC) (REV.03-17-04)

USERNAME => GSOUZA DATE PLOTTED => 14-AUG-2008 TIME PLOTTED => 11:10

DIST	COUNTY	ROUTE	KILOMETER POST TOTAL PROJECT	SHEET No	TOTAL SHEETS
04	SF	80	12.6/13.2		

08-11-08
REGISTERED CIVIL ENGINEER DATE

PLANS APPROVAL DATE

The State of California or its officers or agents shall not be responsible for the accuracy or completeness of electronic copies of this plan sheet.

REGISTERED PROFESSIONAL ENGINEER M. J. CULLEN No. C 40620 Exp. 03-31-09 CIVIL STATE OF CALIFORNIA

MARK	DATE	REVISION(S) DESCRIPTIONS	DES	CHK	DET
1	08-11-08	Existing utility vault filled with conc	CD	MC	GS

REGISTERED CIVIL ENGINEER: DATE:

REGISTERED PROFESSIONAL ENGINEER M.J. Cullen No. C 40620 Exp. 03-31-09 CIVIL STATE OF CALIFORNIA

CONTRACT CHANGE ORDER NO. 141
SHEET 5 OF 21

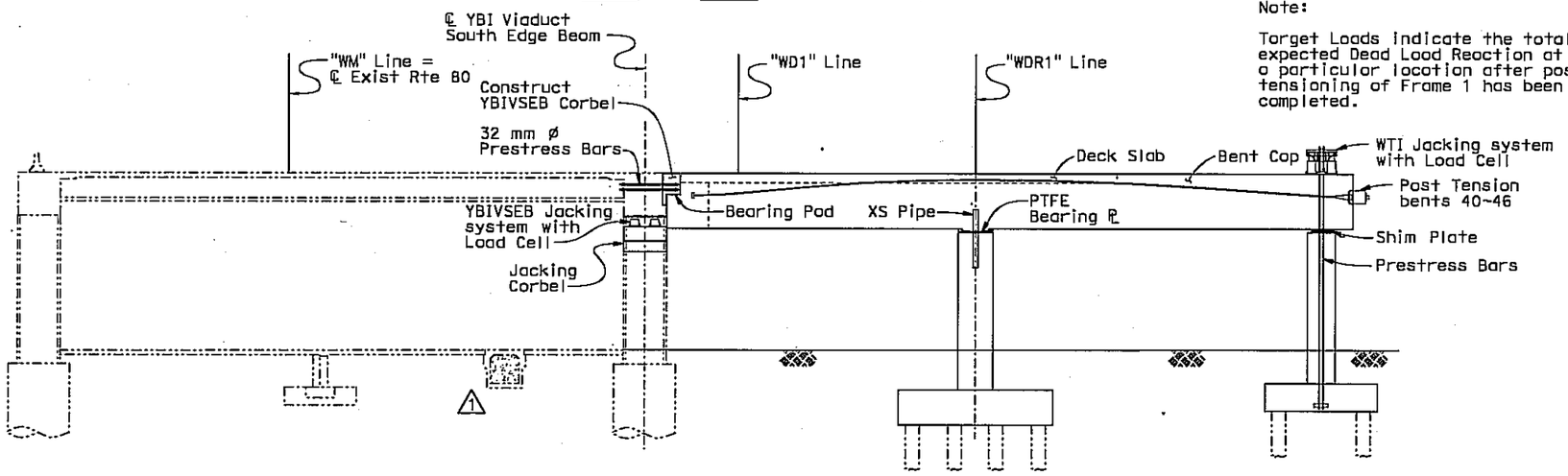

TYPICAL SECTION
no scale

YBIVSEB TARGET LOADS	
LOAD CELL LOCATION	TARGET COMPRESSION LOAD (kN)
YBI Bent 40R	0
YBI Bent 41A	0
YBI Bent 41B	0
YBI Bent 42R	0

Note:

Target Loads indicate the total expected Dead Load Reaction at a particular location after post tensioning of Frame 1 has been completed.

TARGET LOADS	
LOAD CELL LOCATION	TARGET LOAD (kN)
WTI Bent 40R	450
WTI Bent 41AR	950
WTI Bent 41BR	730
WTI Bent 42AR	860
WTI Bent 42BR	660
WTI Bent 43AR	860
WTI Bent 43BR	790
WTI Bent 44AR	1230
WTI Bent 44BR	1340
WTI Bent 45AR	1100
WTI Bent 45BR	790
WTI Bent 46L	2250

Note:

Target Loads indicate the total expected Dead Load Reaction at a particular location after post tensioning of Frame 1 has been completed.

YBI VIADUCT SOUTH EDGE BEAM CORBEL CONSTRUCTION PLAN

Note:

See "Edge Beam Details" sheets

1. Place Bearing Pads, Hinge Reinforcing and Prestress Bars.
2. Concrete Placement Plan
   - A) Begin Traffic Control, Shift Westbound traffic to two north most lanes. (8 hour Traffic Control)
   - B) Place concrete for hinge Corbel, concrete shall be high early strength mix that is capable of achieving an f'_{ci}= 28 MPa or greater in three hours.
   - C) Let Hinge concrete set for one hour.
3. Remove slack from 32 mm ø Prestress Bars in Hinge Corbel. Tighten all Prestress Anchor Nuts to 300 N-m torque.
4. The Traffic Control may be lifted when all Prestress Anchor Nuts have been tightened and the concrete has been in place for at least three hours.
5. Post tension and grout all 32 mm ø Prestress Bars in Hinge Corbel.

POST TENSIONING PLAN (WTI BENT 40 THROUGH BENT 46)

Note:

See "Bent Layout" sheets.

WTI Bents shall be Post Tensioned by the following sequence:

1. Post Tension Bents 40 through 46 and Beam Footing 46L to 20% Pjack
2. Post Tension Bents 40 through 46 and Beam Footing 46L to 40% Pjack
3. Post Tension Bents 40 through 46 and Beam Footing 46L to 60% Pjack
4. Post Tension Bents 40 through 46 and Beam Footing 46L to 80% Pjack
5. Post Tension Bents 40 through 46 and Beam Footing 46L to 100% Pjack
6. Simultaneous Post tensioning of Bents is permissible within each sequence. After each sequence of post tensioning approval of the Engineer is required before proceeding to the next sequence.
7. Grout all Prestress Tendons
8. Remove all Falsework and Sharing Towers

LOAD TRANSFER ASSURANCE PLAN

1. Check Load Cells at all locations.
   - A) Compare load cell Data to target loads at each load cell location, see "Target Loads" Tables
   - B) If Load Cell readings indicate that loads are within 10% of target loads at the WTI locations and the loads on the YBIVSEB Jacks have been reduced by 90% then release and remove all YBIVSEB Jacks. Monitor the profile of YBIVSEB.
   - C) If target loads have not been achieved or if the profile of YBIVSEB is not within tolerance then adjustment of the affected WTI Bents as directed by the Engineer will be required. For bent adjustment details see "Column Details No. 2" sheet
2. Once load transfers have been achieved and accepted by the Engineer, the Load Cells and YBIVSEB shall be monitored for a period of 60 days.
3. If Load Cells and YBIVSEB indicate adequate stability after 60 day period the Contractor may proceed with the "Final Post Tensioning Procedure" of the Prestress Bars in the WTI Right Columns by adding 600 kN additional jacking force on each Tension Column, see "Column Details No. 2" sheet.
4. Grout Prestress Bars
5. Remove YBI Columns at Bents 40, 41A, 41B and 42.

NOTE:
THE CONTRACTOR SHALL VERIFY ALL CONTROLLING FIELD DIMENSIONS BEFORE ORDERING OR FABRICATING ANY MATERIAL.

Caltrans Metric

	BY	CHECKED
DESIGN	M. J. Cullen	C. M. Duan
DETAILS	G. M. Souza	C. M. Duan
QUANTITIES	C. M. Duan	M. J. Cullen

STATE OF CALIFORNIA
DEPARTMENT OF TRANSPORTATION

DIVISION OF ENGINEERING SERVICES
STRUCTURE DESIGN
DESIGN BRANCH 5

BRIDGE NO. 34-0006
KILOMETER POST 12.6

WEST TIE IN PHASE 2
SOUTH - SOUTH DETOUR
CONSTRUCTION DETAILS NO. 2

ALL DIMENSIONS ARE IN MILLIMETERS UNLESS OTHERWISE SHOWN

ORIGINAL SCALE IN MILLIMETERS FOR REDUCED PLANS 0 10 20 30 40 50 60 70 80 90 100

CU 04251
EA 0120P1

DISREGARD PRINTS BEARING EARLIER REVISION DATES

REVISION DATES						SHEET	OF
01-30-08	02-01-08	02-22-08	08-11-08			7R1	64

FILE => 34-0006-c-const-details02_r1.dgn

STRUCTURES DESIGN DETAIL SHEET (METRIC) (REV.03-17-04)

DATE PLOTTED => 14-AUG-2008 TIME PLOTTED => 11:11
USERNAME => dgouzo

DIST	COUNTY	ROUTE	KILOMETER POST TOTAL PROJECT	SHEET No	TOTAL SHEETS
04	SF	80	12.6/13.2		

08-11-08
REGISTERED CIVIL ENGINEER DATE

PLANS APPROVAL DATE

REGISTERED PROFESSIONAL ENGINEER — M. J. CULLEN — No. C 40620 — Exp. 03-31-09 — CIVIL — STATE OF CALIFORNIA

The State of California or its officers or agents shall not be responsible for the accuracy or completeness of electronic copies of this plan sheet.

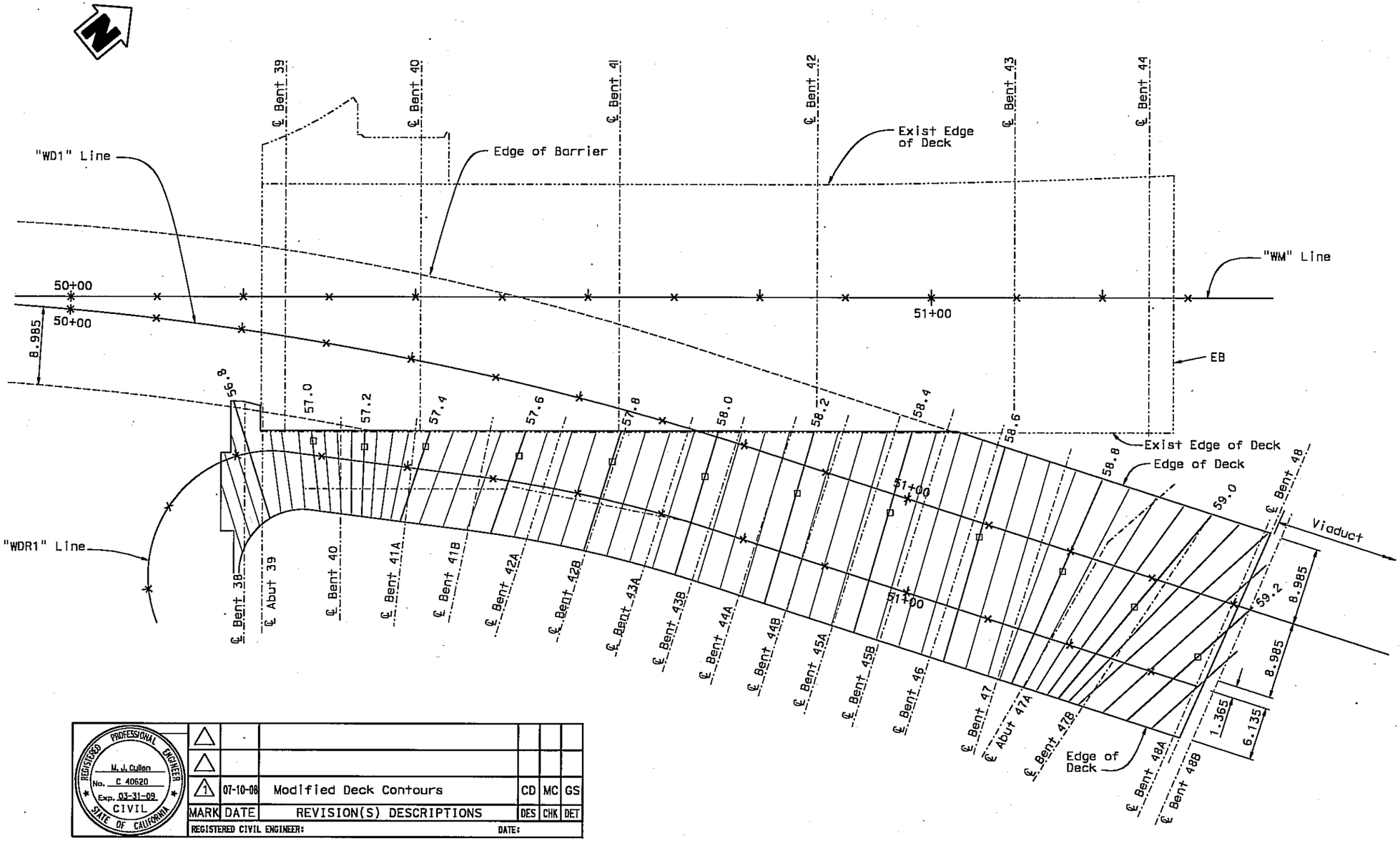

MARK	DATE	REVISION(S) DESCRIPTIONS	DES	CHK	DET
1	07-10-08	Modified Deck Contours	CD	MC	GS

REGISTERED CIVIL ENGINEER: DATE:

REGISTERED PROFESSIONAL ENGINEER — M. J. Cullen — No. C 40620 — Exp. 03-31-09 — CIVIL — STATE OF CALIFORNIA

CONTRACT CHANGE ORDER NO. 141
SHEET 6 OF 21

PLAN
1:250

LENGEND:
- ▫ - Indicates 200 mm contours
- × = 10 m intervals along station line
- Contours do not include camber
- Contour Interval = 50 mm

NOTE:
THE CONTRACTOR SHALL VERIFY ALL CONTROLLING FIELD DIMENSIONS BEFORE ORDERING OR FABRICATING ANY MATERIAL.

Caltrans Metric

ALL DIMENSIONS ARE IN MILLIMETERS UNLESS OTHERWISE SHOWN

ORIGINAL SCALE IN MILLIMETERS FOR REDUCED PLANS 0 10 20 30 40 50 60 70 80 90 100

	BY	CHECKED
DESIGN	C. M. Duan	M. J. Cullen
DETAILS	G. M. Souza	M. J. Cullen
QUANTITIES	C. M. Duan	M. J. Cullen

STATE OF CALIFORNIA
DEPARTMENT OF TRANSPORTATION

DIVISION OF ENGINEERING SERVICES
STRUCTURE DESIGN
DESIGN BRANCH 5

CU 04251
EA 0120P1

FILE => 34-0006-d-deck-con_wb-r1.dgn

BRIDGE NO. 34-0006
KILOMETER POST 12.6

DISREGARD PRINTS BEARING EARLIER REVISION DATES

REVISION DATES: 09-22-07 | 09-24-07 | 10-31-07 | 12-19-08 | 07-10-08 | 08-11-08

SHEET BR1 OF 64

STRUCTURES DESIGN DETAIL SHEET (METRIC) (REV.03-17-04)

WEST TIE IN PHASE 2
SOUTH - SOUTH DETOUR
DECK CONTOURS-WESTBOUND

USERNAME => dsouza DATE PLOTTED => 14-AUG-2008 TIME PLOTTED => 07:58

Note: For pile details in Bent 47, see "Bent 47 Pile Details" sheet

MARK	DATE	REVISION(S) DESCRIPTIONS	DES	CHK	DET
1	07-10-08	Eliminated Rebar Cage cut off elevation	CD	MC	GS

REGISTERED CIVIL ENGINEER: DATE:

M. J. Cullen No. C 40620 Exp. 03-31-09 CIVIL — REGISTERED PROFESSIONAL ENGINEER — STATE OF CALIFORNIA

CONTRACT CHANGE ORDER NO. 141
SHEET 7 OF 21

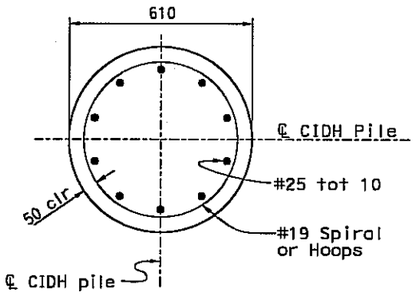

SECTION C-C
1:10

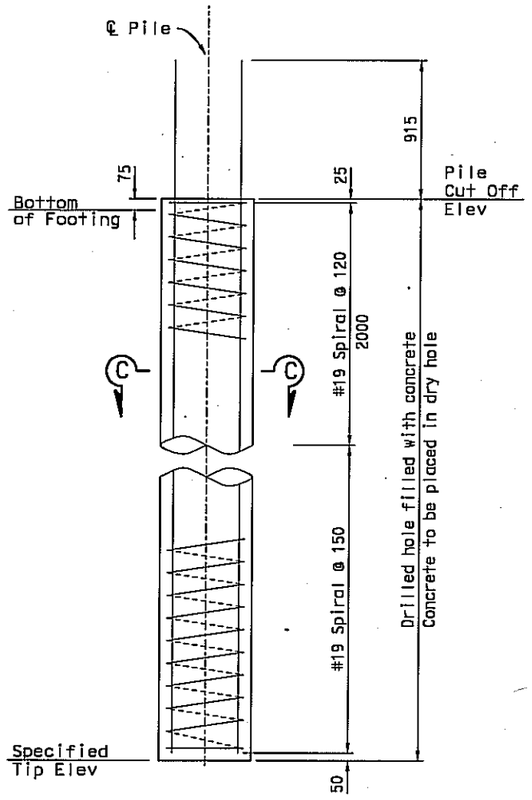

ELEVATION FOOTINGS & ABUTMENT 47A
1:20

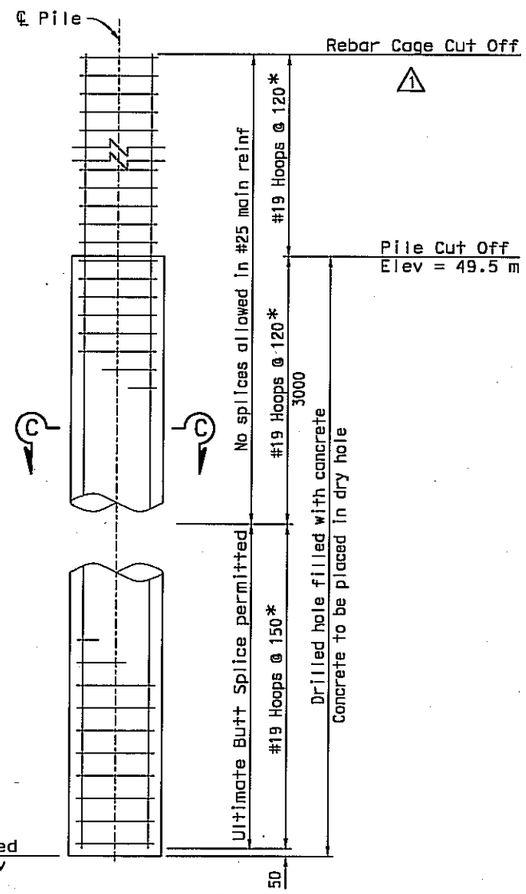

*All Hoops shall be Ultimate Butt Spliced

ELEVATION BENTS 38 & 39
1:20

610 mm CIDH CONCRETE PILE

NOTE:
THE CONTRACTOR SHALL VERIFY ALL CONTROLLING FIELD DIMENSIONS BEFORE ORDERING OR FABRICATING ANY MATERIAL.

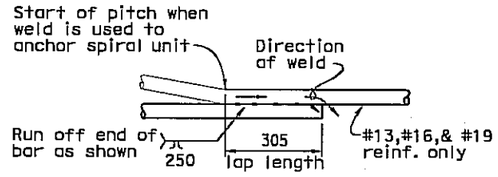

Note: Flare weld to be made in direction shown.

WELDED LAP SPLICE AND ANCHOR

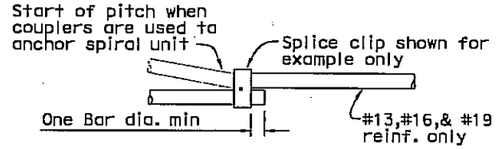

MECHANICAL LAP SPLICE AND ANCHOR

SPIRAL SPLICE AND END ANCHOR DETAIL
no scale

DIST	COUNTY	ROUTE	KILOMETER POST TOTAL PROJECT	SHEET No	TOTAL SHEETS
04	SF	80	12.6/13.2		

08-11-08
REGISTERED CIVIL ENGINEER DATE

PLANS APPROVAL DATE

The State of California or its officers or agents shall not be responsible for the accuracy or completeness of electronic copies of this plan sheet.

M. J. CULLEN No. C 40620 Exp. 03-31-09 CIVIL — REGISTERED PROFESSIONAL ENGINEER — STATE OF CALIFORNIA

PILE DATA - 610 mm CIDH CONCRETE PILES

LOCATION	DESIGN LOADING (KN)	NOMINAL RESISTANCE (kN)		CUT-OFF ELEVATION (m)	CIDH PILE DESIGN TIP ELEV (m)	CIDH SPECIFIED TIP ELEV (m)
		COMPRESSION	TENSION			
Bent 38	1250	2500	N/A	49.500	40.000	40.000 (1)(3)
Bent 39	1250	2500	N/A	49.500	40.000	40.000 (1)(3)
Footing No. 1	1250	2500	1250	47.675	39.000	39.000 (1)
Footing No. 2	1250	2500	1250	47.875	36.500	36.500 (1)
Footing No. 3	1250	2500	1250	48.475	34.000	34.000 (1)
Footing No. 4	1250	2500	1250	47.875	34.000	34.000 (1)
Footing No. 5	1250	2500	1250	48.475	39.500	39.500 (1)(2)
Footing No. 6	1250	2500	1250	48.475	35.500	35.500 (1)(2)
Footing No. 7	1250	2500	1250	47.875	33.000	33.000 (1)(2)
Footing No. 8	1250	2500	1250	47.175	33.000	33.000 (1)(2)
Abut 47A	900	1800	N/A	48.750	34.300	34.300 (1)

PILE DATA - 2.13 m CIDH CONCRETE PILES

LOCATION	DESIGN LOADING (KN)	NOMINAL RESISTANCE (kN)		CUT-OFF ELEVATION (m)	CIDH PILE DESIGN TIP ELEV (m)	CIDH SPECIFIED TIP ELEV (m)
		COMPRESSION	TENSION			
Bent 47L	8000	16 000	0	47.975	24.000	24.000
Bent 47R	8000	16 000	0	49.200	25.000	25.000

Note:
Design Tip Elevation is controlled by the following demands:
(1) Compression. (2) Tension, (3) Lateral Loads

Caltrans Metric

	BY	CHECKED
DESIGN	C. M. Duan	M. J. Cullen
DETAILS	G. Souza	M. J. Cullen
QUANTITIES	C. M. Duan	M. J. Cullen

STATE OF CALIFORNIA
DEPARTMENT OF TRANSPORTATION

DIVISION OF ENGINEERING SERVICES
STRUCTURE DESIGN
DESIGN BRANCH 5

BRIDGE NO. 34-0006
KILOMETER POST 12.6

WEST TIE IN PHASE 2
SOUTH - SOUTH DETOUR
PILE DATA TABLES

ALL DIMENSIONS ARE IN MILLIMETERS UNLESS OTHERWISE SHOWN

ORIGINAL SCALE IN MILLIMETERS FOR REDUCED PLANS 0 10 20 30 40 50 60 70 80 90 100

CU 04251
EA 0120P1

DISREGARD PRINTS BEARING EARLIER REVISION DATES

REVISION DATES: 8-24-07 | 8-28-07 | 8-30-07 | 9-26-07 | 10-12-07 | 8-11-08

SHEET 11R1 OF 64

FILE => 34-0006-e_pile_data_tables-r1.dgn

STRUCTURES DESIGN DETAIL SHEET (METRIC) (REV.03-17-04)

USERNAME => qsouza DATE PLOTTED => 13-AUG-2008 TIME PLOTTED => 16:43

DIST	COUNTY	ROUTE	KILOMETER POST TOTAL PROJECT	SHEET No	TOTAL SHEETS
04	SF	80	12.6/13.2		

08-11-08
REGISTERED CIVIL ENGINEER DATE

PLANS APPROVAL DATE

The State of California or its officers or agents shall not be responsible for the accuracy or completeness of electronic copies of this plan sheet.

MARK	DATE	REVISION(S) DESCRIPTIONS	DES	CHK	DET
2	08-11-08	Revised locations for mechanical couplers	CD	MC	GS
1	08-11-08	Add prestress conduits	CD	MC	GS

REGISTERED CIVIL ENGINEER: DATE:

CONTRACT CHANGE ORDER NO. 141
SHEET 8 OF 21

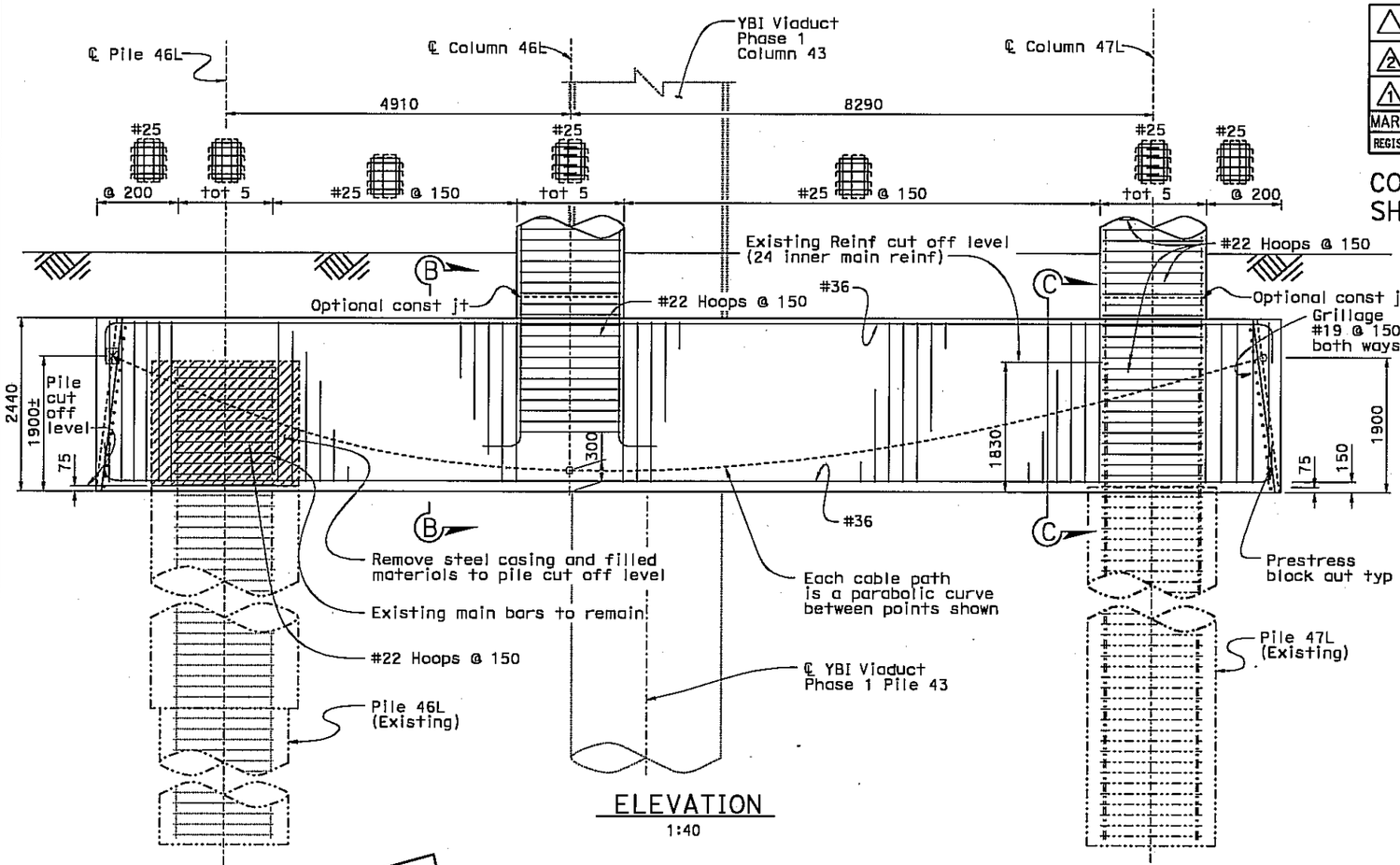

ELEVATION
1:40

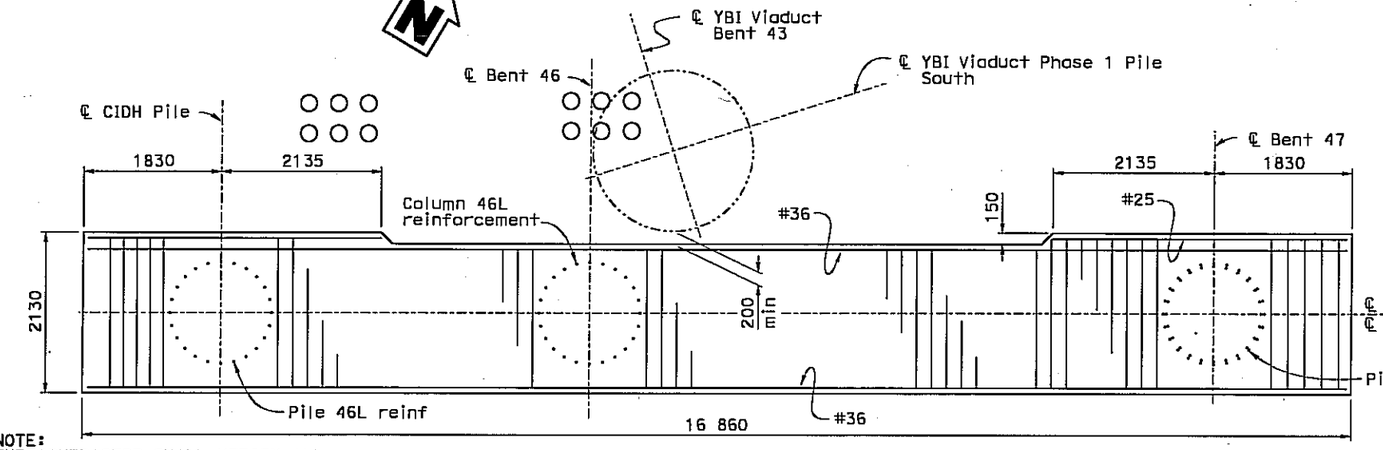

NOTE:
THE CONTRACTOR SHALL VERIFY ALL CONTROLLING FIELD DIMENSIONS BEFORE ORDERING OR FABRICATING ANY MATERIAL.

BEAM FOOTING PLAN
1:40

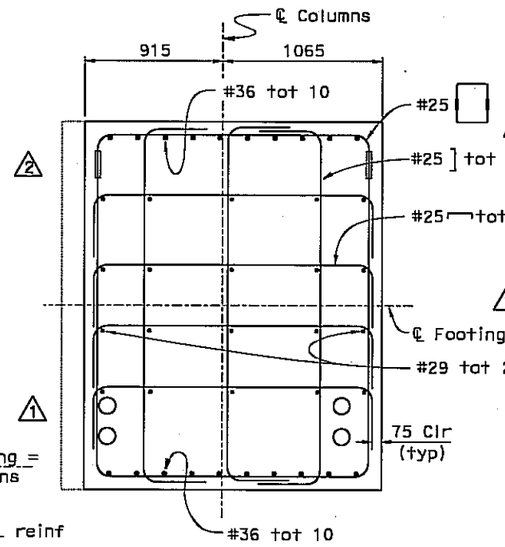

SECTION B-B
1:20

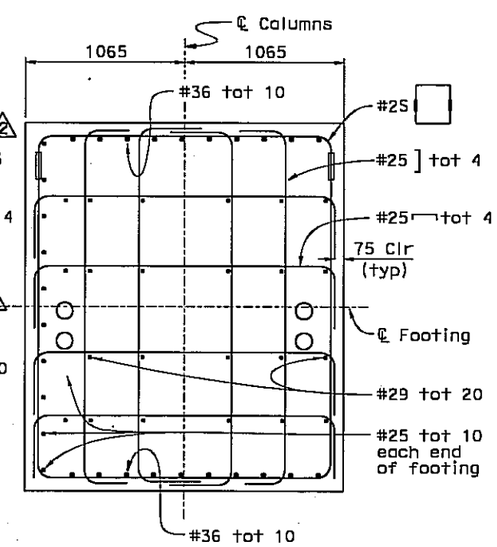

SECTION C-C
1:20

PRESTRESSING NOTES

1860 MPa Low Relaxation Strands:

Pjack = 12 600 kN

Anchor Set = 10 mm

Friction curvature coefficient μ = 0.20

Friction wobble coefficient K = 6.6 x 10-⁴/mm

Concrete: f'c = 28.0 Mpa @ 28 days
f'ci = 25.5 Mpa @ time of stressing

Contractor shall submit elongation calculations based on initial stress at
☒ = 0.870 times jacking stress

One end stressing shall be performed from Northeast end.

Notes: 1. For Pile 46L see "West Tie In Phase 1 YBI Viaduct Replacement" plans.
2. For Pile 47L see "Bent 47 Pile Details" sheet.

	BY	CHECKED
DESIGN	C. M. Duan	G. Schuster
DETAILS	G. Souza/S. Jiang	G. Schuster/M. Cullen
QUANTITIES	C. M. Duan	G. Schuster

STATE OF CALIFORNIA
DEPARTMENT OF TRANSPORTATION

DIVISION OF ENGINEERING SERVICES
STRUCTURE DESIGN
DESIGN BRANCH 5

BRIDGE NO. 34-0006
KILOMETER POST 12.6

CU 04251
EA 0120P1

ALL DIMENSIONS ARE IN MILLIMETERS UNLESS OTHERWISE SHOWN

ORIGINAL SCALE IN MILLIMETERS FOR REDUCED PLANS 0 10 20 30 40 50 60 70 80 90 100

DISREGARD PRINTS BEARING EARLIER REVISION DATES →

REVISION DATES: 08-22-01 | 08-31-01 | 09-13-01 | 12-11-07 | 01-11-08 | 01-16-08 | 02-20-08 | 08-11-08

WEST TIE IN PHASE 2
SOUTH - SOUTH DETOUR
FOOTING DETAILS NO. 4

SHEET 16R1 OF 64

STRUCTURES DESIGN DETAIL SHEET (METRIC) (REV.03-17-04)

FILE => 34-0006-q_ftng_dt104_r1.dgn

USERNAME => qsouza DATE PLOTTED => 14-AUG-2008 TIME PLOTTED => 11:18

DIST	COUNTY	ROUTE	KILOMETER POST TOTAL PROJECT	SHEET No	TOTAL SHEETS
04	SF	80	12.6/13.2		

06-11-08
REGISTERED CIVIL ENGINEER DATE

PLANS APPROVAL DATE

M. J. CULLEN No. C 40620 Exp. 03-31-09 CIVIL — REGISTERED PROFESSIONAL ENGINEER — STATE OF CALIFORNIA

The State of California or its officers or agents shall not be responsible for the accuracy or completeness of electronic copies of this plan sheet.

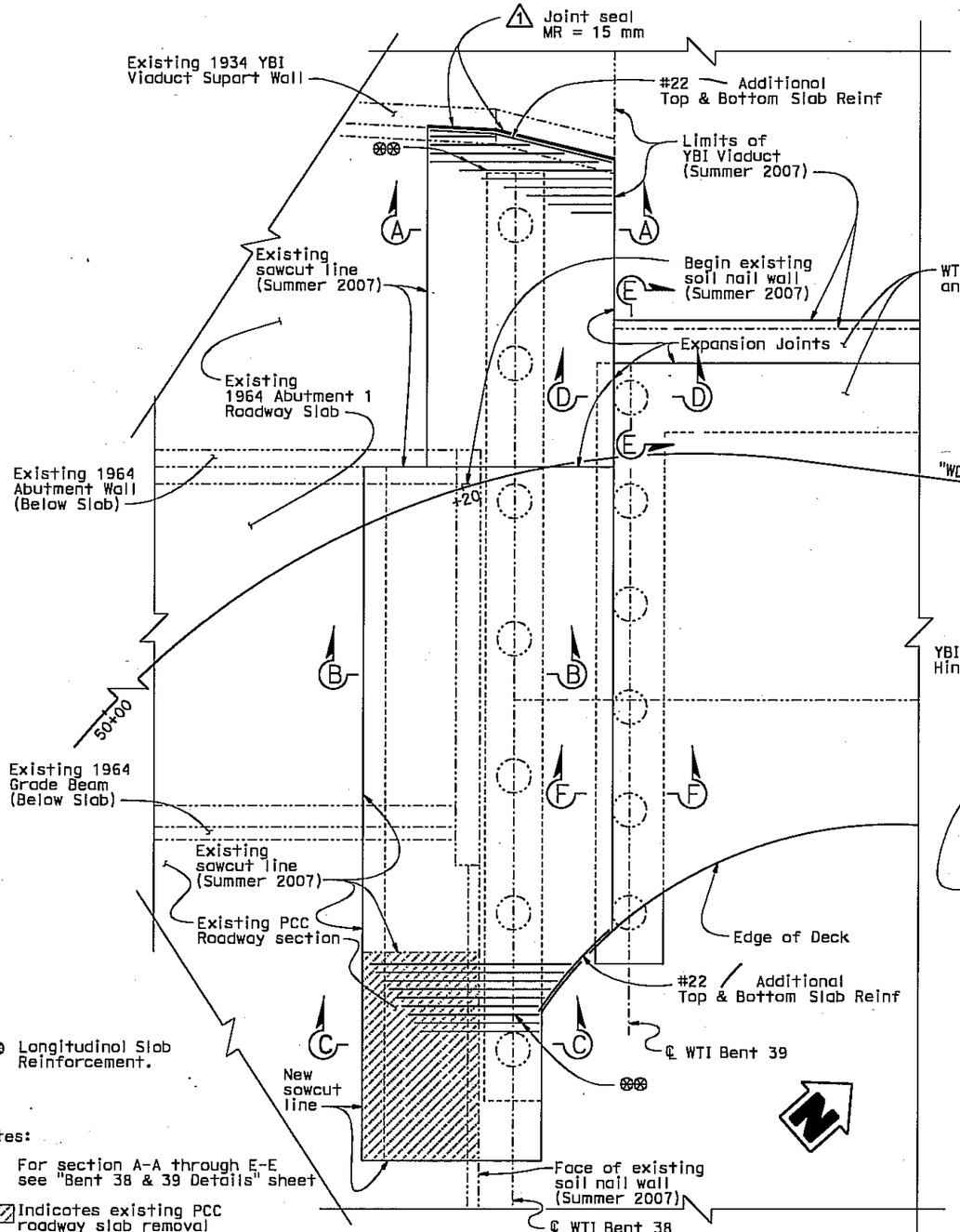

Notes:

For section A-A through E-E see "Bent 38 & 39 Details" sheet

NOTE:
THE CONTRACTOR SHALL VERIFY ALL CONTROLLING FIELD DIMENSIONS BEFORE ORDERING OR FABRICATING ANY MATERIAL.

BENT 38 & 39 PLAN
1:50

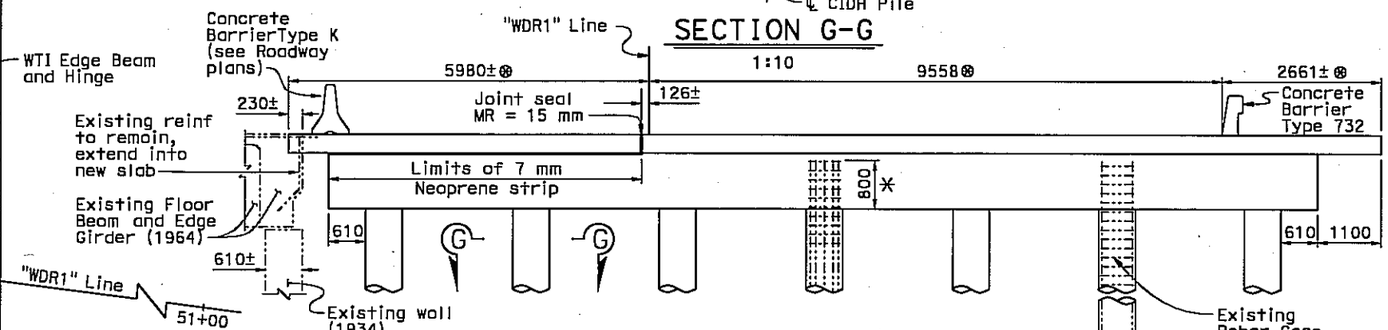

SECTION G-G
1:10

* Main Column reinforcement and hoops to be extended into Bent cap 800 mm (typ)

BENT 38 ELEVATION
1:50

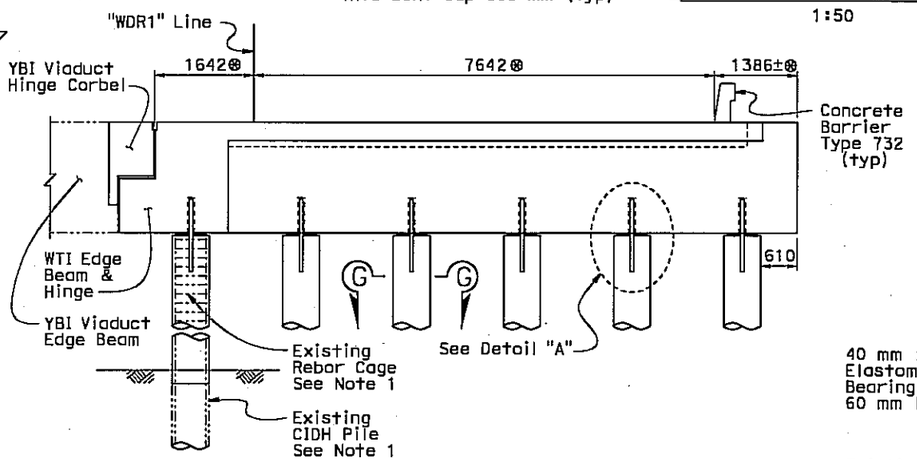

BENT 39 ELEVATION
1:50

Note 1:

All CIDH Piles were placed on a previous contract. See "West Tie In Phase 2 Foundation Submittal".

⊛ Indicates measurement along ℄ Bent.

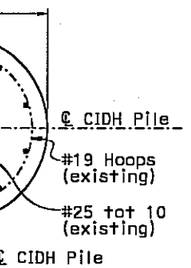

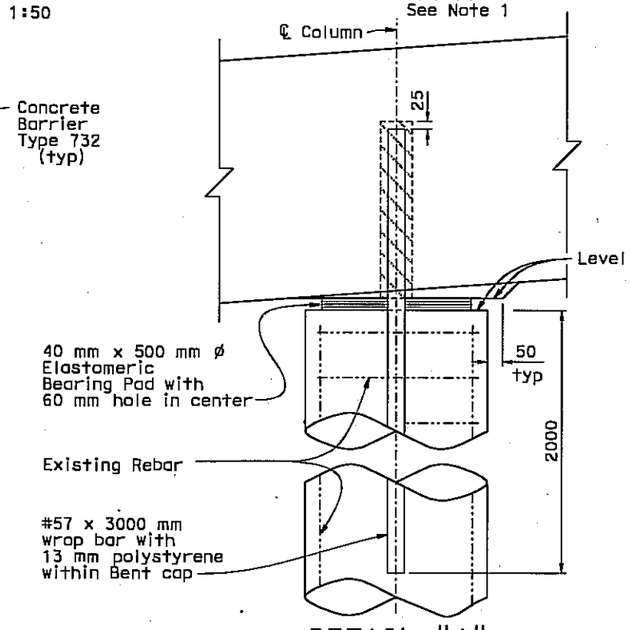

DETAIL "A"
1:10

MARK	DATE	REVISION(S) DESCRIPTIONS	DES	CHK	DET
1	07-09-08	Add Joint Seal MR = 15 mm			

REGISTERED CIVIL ENGINEER: DATE:

M.J. Cullen No. C 40620 Exp. 03-31-09 CIVIL — REGISTERED PROFESSIONAL ENGINEER — STATE OF CALIFORNIA

CONTRACT CHANGE ORDER NO. 141
SHEET 9 OF 21

DESIGN	M. J. Cullen	C. M. Duan	
DETAILS	G. M. Souza/S. Jiang	C. M. Duan	
QUANTITIES	C. M. Duan	M. J. Cullen	

STATE OF CALIFORNIA
DEPARTMENT OF TRANSPORTATION

DIVISION OF ENGINEERING SERVICES
STRUCTURE DESIGN
DESIGN BRANCH 5

CU 04251
EA 0120P1

BRIDGE NO. 34-0006
KILOMETER POST 12.6

WEST TIE IN PHASE 2
SOUTH - SOUTH DETOUR
BENT 38 & 39 PLAN

Caltrans Metric

ALL DIMENSIONS ARE IN MILLIMETERS UNLESS OTHERWISE SHOWN

ORIGINAL SCALE IN MILLIMETERS FOR REDUCED PLANS 0 10 20 30 40 50 60 70 80 90 100

DISREGARD PRINTS BEARING EARLIER REVISION DATES

REVISION DATES: 11-26-07 | 11-26-07 | 01-25-08 | 02-20-08 | 08-11-08

SHEET 17R1 OF 64

FILE => 34-0006-g-bent38-39_plan_r1.dgn

STRUCTURES DESIGN DETAIL SHEET (METRIC) (REV.03-17-04)

USERNAME => dsouza DATE PLOTTED => 13-AUG-2008 TIME PLOTTED => 16:43

DIST	COUNTY	ROUTE	KILOMETER POST TOTAL PROJECT	SHEET No	TOTAL SHEETS
04	SF	80	12.6/13.2		

08-11-08
REGISTERED CIVIL ENGINEER DATE

PLANS APPROVAL DATE

REGISTERED PROFESSIONAL ENGINEER M. J. CULLEN No. C 40620 Exp. 03-31-09 CIVIL STATE OF CALIFORNIA

The State of California or its officers or agents shall not be responsible for the accuracy or completeness of electronic copies of this plan sheet.

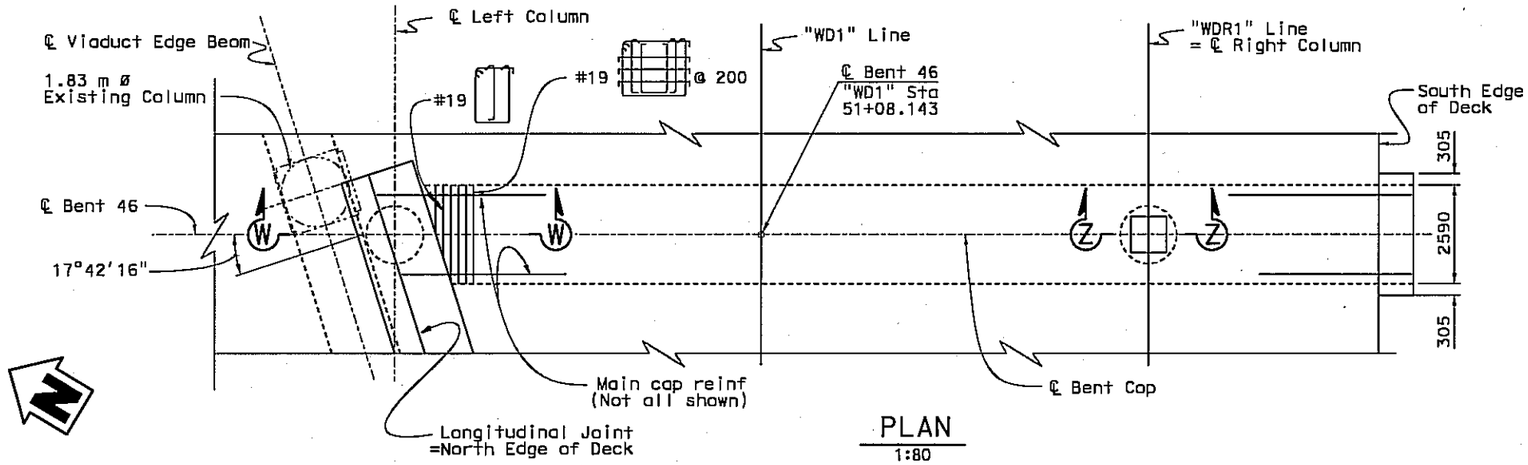

PLAN
1:80

Note: Concrete Barriers not shown for clarity.

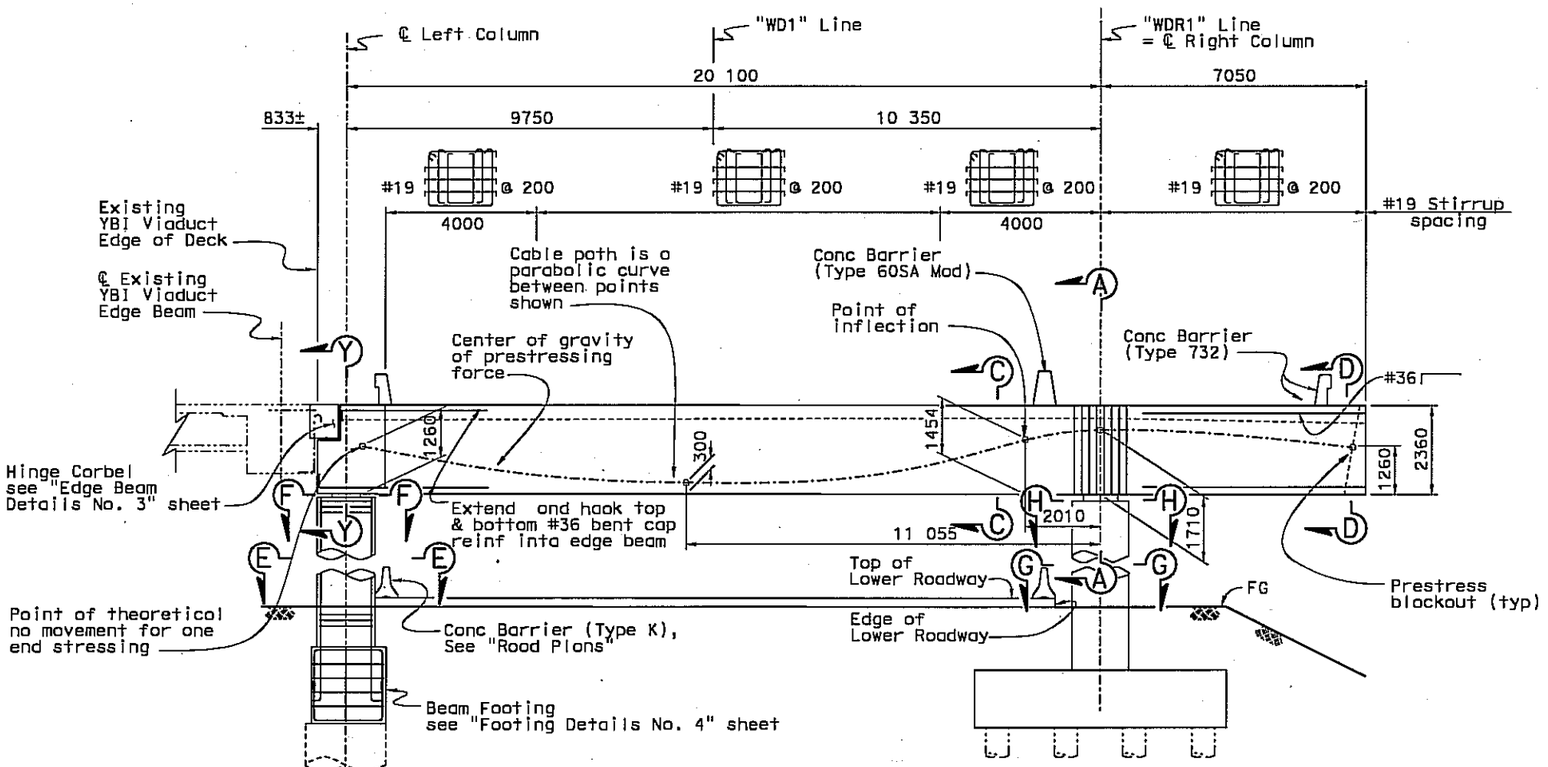

ELEVATION
1:80

STA "WDR1" 51+08.141

NOTE:
THE CONTRACTOR SHALL VERIFY ALL CONTROLLING FIELD DIMENSIONS BEFORE ORDERING OR FABRICATING ANY MATERIAL.

BENT CAP PRESTRESSING NOTES

1860 MPa Low Relaxation Strands:

Pjack	=10 000	kN
Anchor Set	= 10	mm
Friction curvature coefficient	μ = 0.20	
Friction wobble coefficient	K = 6.6 x 10^{-7}/mm	

Concrete: f'c = 45.0 Mpa @ 28 days
f'ci = 30.0 Mpa @ time of stressing

Contractor shall submit elongation calculations based on initial stress at
☒ = 0.790 times jacking stress

One end stressing shall be performed from Southeast end.

Notes:

1. No splices allowed in main column reinforcement.
2. For Edge Beam details, see Edge Beam Details sheets.
3. For Sections A-A, C-C and D-D see "Bent Cap Details No. 1" sheet.
4. For Sections E-E, F-F, G-G and H-H, see "Column Details No. 1" sheet.
5. ⚠1 For Sections W-W, Y-Y and Z-Z, see "Bent Cap Details No. 2" and "Bent Cap Details No. 3" sheet.

REGISTERED PROFESSIONAL ENGINEER M.J. Cullen No. C 40620 Exp. 03-31-09 CIVIL STATE OF CALIFORNIA

MARK	DATE	REVISION(S) DESCRIPTIONS	DES	CHK	DET
⚠1	08-11-08	Revised note to include section Y-Y	CD	MC	GS

REGISTERED CIVIL ENGINEER: DATE:

CONTRACT CHANGE ORDER NO. 141
SHEET 10 OF 21

DESIGN	BY C. M. Duan	CHECKED M. J. Cullen	STATE OF CALIFORNIA DEPARTMENT OF TRANSPORTATION	DIVISION OF ENGINEERING SERVICES STRUCTURE DESIGN	BRIDGE NO. 34-0006
DETAILS	BY A. Chen/S. Jiang/G. Souza	CHECKED M. J. Cullen		DESIGN BRANCH 5	KILOMETER POST 12.6
QUANTITIES	BY C. M. Duan	CHECKED M. J. Cullen			

WEST TIE IN PHASE 2
SOUTH - SOUTH DETOUR
BENT 46 LAYOUT

Caltrans Metric

ALL DIMENSIONS ARE IN MILLIMETERS UNLESS OTHERWISE SHOWN

ORIGINAL SCALE IN MILLIMETERS FOR REDUCED PLANS 0 10 20 30 40 50 60 70 80 90 100

CU 04251
EA 0120P1

DISREGARD PRINTS BEARING EARLIER REVISION DATES →

REVISION DATES: 06-06-07 | 12-26-07 | 12-13-07 | 12-14-07 | 01-04-08 | 1-09-08 | 2-20-08

SHEET 30R1 OF 64

FILE => 34-0006-h-b46_lo_r1.dgn

STRUCTURES DESIGN DETAIL SHEET (METRIC) (REV.03-17-04)

DATE PLOTTED => 13-AUG-2008 TIME PLOTTED => 16:43 USERNAME => gsouza

DIST	COUNTY	ROUTE	KILOMETER POST TOTAL PROJECT	SHEET No	TOTAL SHEETS
04	SF	80	12.6/13.2		

08-11-08
REGISTERED CIVIL ENGINEER DATE

PLANS APPROVAL DATE

REGISTERED PROFESSIONAL ENGINEER — W. J. CULLEN — No. C 40620 — Exp. 03-31-09 — CIVIL — STATE OF CALIFORNIA

The State of California or its officers or agents shall not be responsible for the accuracy or completeness of electronic copies of this plan sheet.

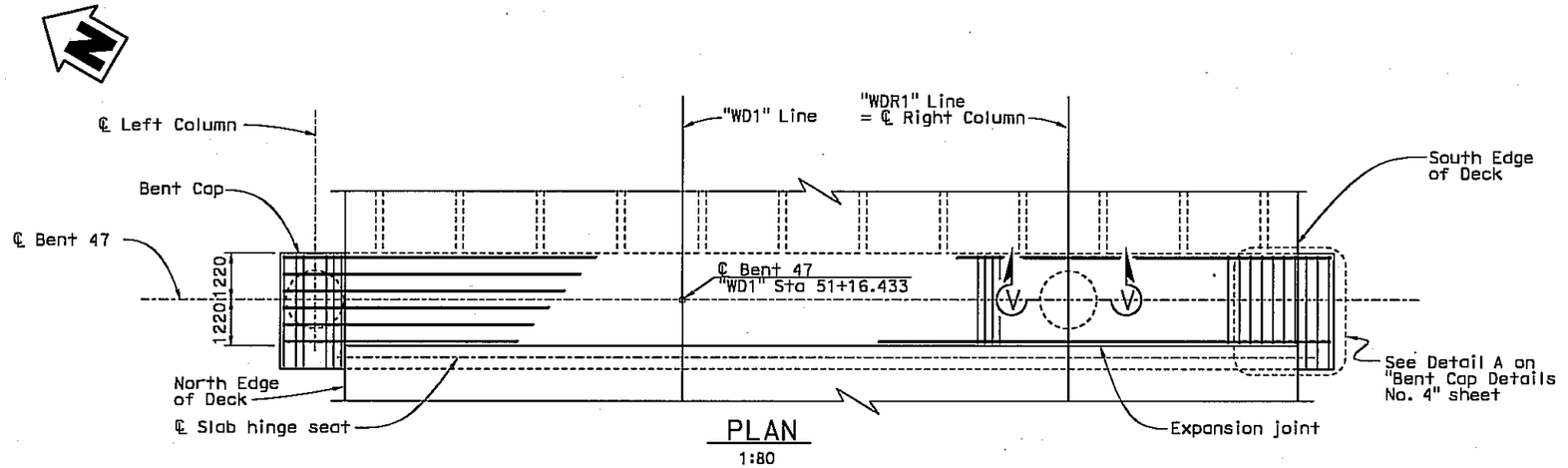

PLAN
1:80
Note: Concrete Barriers not shown for clarity

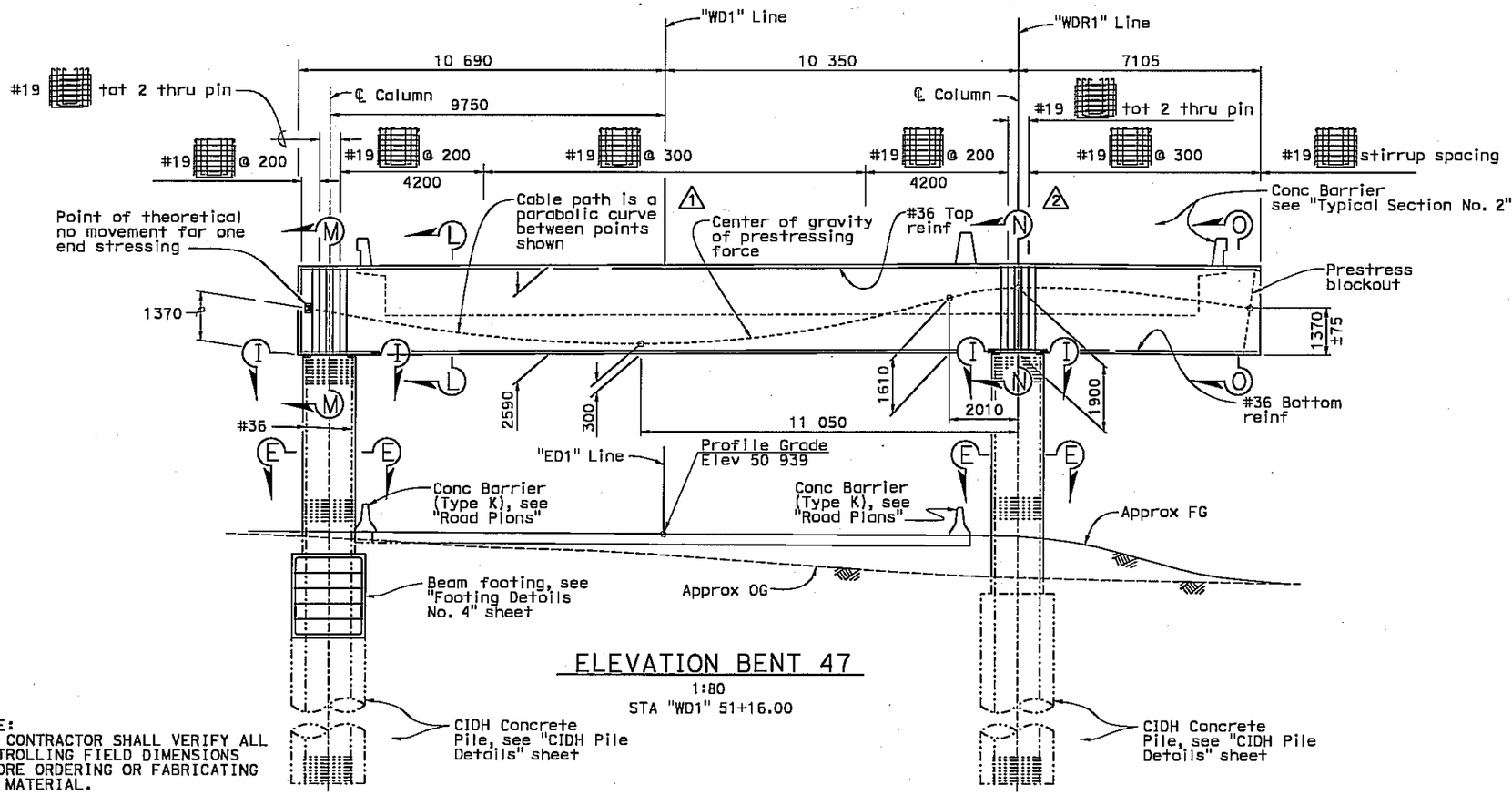

ELEVATION BENT 47
1:80
STA "WD1" 51+16.00

NOTE:
THE CONTRACTOR SHALL VERIFY ALL CONTROLLING FIELD DIMENSIONS BEFORE ORDERING OR FABRICATING ANY MATERIAL.

BENT CAP PRESTRESSING NOTES

1860 MPa Low Relaxation Strand:

P_{jack} = 16 000 kN

Anchor Set = 10 mm

Friction Curvature Coefficient (μ) = 0.20
Friction Wobble Coefficient (K) = 6.6×10^{-7}/mm

Concrete: f'_c = 28.0 MPa @ 28 days

f'_{ci} = 25.0 MPa @ time of stressing

Contractor shall submit elongation calculations based on initial stress at

☒ = 0.700 times jacking stress.

One end stressing shall be performed from Southeast end.

Notes:

1. For Sections E-E & I-I, see "Column Details No. 1" sheet.
2. For Sections M-M, L-L, N-N, and O-O see "Bent Cap Details No. 4" sheet.
3. For Section V-V see "Bent Cap Details No. 2" sheet.

REGISTERED PROFESSIONAL ENGINEER — M.J. Cullen — No. C 40620 — Exp. 03-31-09 — CIVIL — STATE OF CALIFORNIA

MARK	DATE	REVISION(S) DESCRIPTIONS	DES	CHK	DET
2	07-09-08	Eliminate Profile Grade at "WDR1" Line			
1	07-09-08	Eliminate Profile Grade at "WD1" Line			

REGISTERED CIVIL ENGINEER: DATE:

CONTRACT CHANGE ORDER NO. 141
SHEET 11 OF 21

	BY	CHECKED
DESIGN	C. M. Duan	M. J. Cullen
DETAILS	G. Souza/S. Jiang	M. J. Cullen
QUANTITIES	C. M. Duan	M. J. Cullen

STATE OF CALIFORNIA
DEPARTMENT OF TRANSPORTATION

DIVISION OF ENGINEERING SERVICES
STRUCTURE DESIGN
DESIGN BRANCH 5

BRIDGE NO. 34-0006
KILOMETER POST 12.6

WEST TIE IN PHASE 2
SOUTH - SOUTH DETOUR
BENT 47 LAYOUT

Caltrans Metric

ALL DIMENSIONS ARE IN MILLIMETERS UNLESS OTHERWISE SHOWN

ORIGINAL SCALE IN MILLIMETERS FOR REDUCED PLANS 0 10 20 30 40 50 60 70 80 90 100

CU 04251
EA 0120P1

FILE => 34-0006-h-b47_lo_r1.dgn

DISREGARD PRINTS BEARING EARLIER REVISION DATES

REVISION DATES: 06-04-07 | 12-06-07 | 12-19-07 | 12-21-07 | 01-04-08 | 02-20-08 | 05-11-08

SHEET 31R1 OF 64

STRUCTURES DESIGN DETAIL SHEET (METRIC) (REV.03-17-04)

USERNAME => dsouza DATE PLOTTED => 13-AUG-2008 TIME PLOTTED => 16:43

DIST	COUNTY	ROUTE	KILOMETER POST TOTAL PROJECT	SHEET No	TOTAL SHEETS
04	SF	80	12.6/13.2		

08-11-08
REGISTERED CIVIL ENGINEER DATE

PLANS APPROVAL DATE

The State of California or its officers or agents shall not be responsible for the accuracy or completeness of electronic copies of this plan sheet.

REGISTERED PROFESSIONAL ENGINEER — M. J. Cullen — No. C 40620 — Exp. 03-31-09 — CIVIL — STATE OF CALIFORNIA

MARK	DATE	REVISION(S) DESCRIPTIONS	DES	CHK	DET
2	07-09-08	Eliminate Profile Grade at "ED1" Line			
1	07-09-08	Eliminate Profile Grade at "EDR1" Line			

REGISTERED CIVIL ENGINEER: DATE:

REGISTERED PROFESSIONAL ENGINEER — M.J. Cullen — No. C 40620 — Exp. 03-31-09 — CIVIL — STATE OF CALIFORNIA

CONTRACT CHANGE ORDER NO. 141
SHEET 12 OF 21

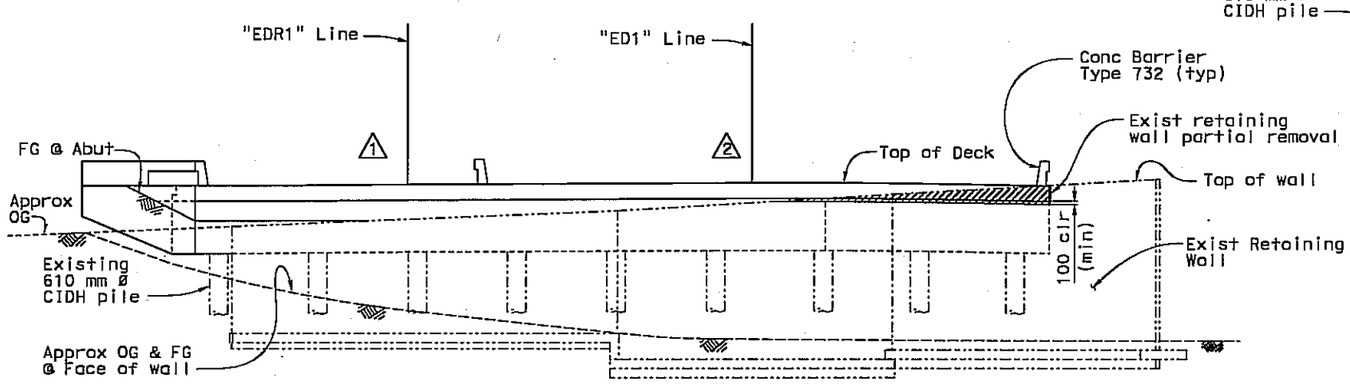

ELEVATION-ABUTMENT 47A
1:100
(Looking Downstation)

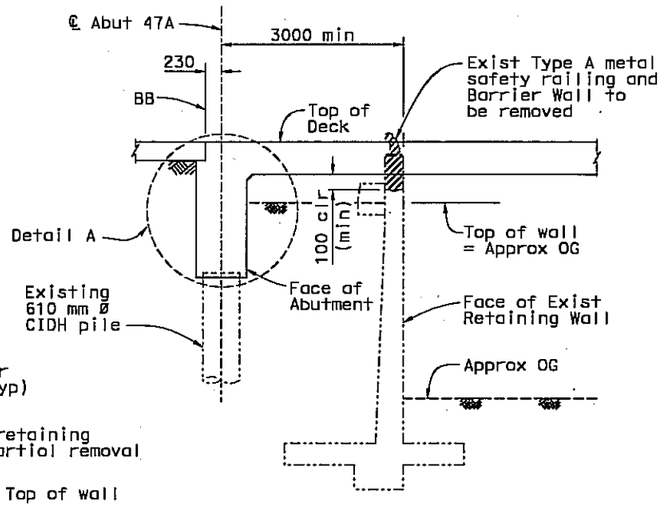

SECTION A-A
1:50

LEGEND:
Indicates Existing Structure
Indicates Bridge Removal (Portion)

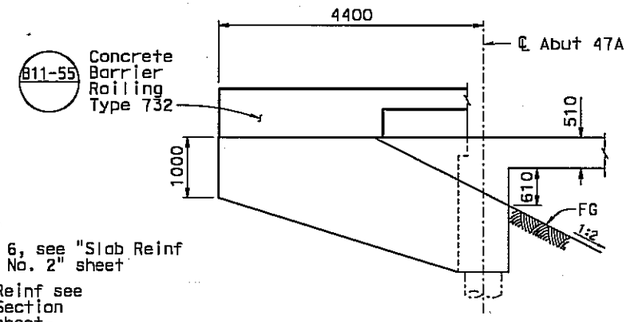

WINGWALL ELEVATION BO-1
1:50

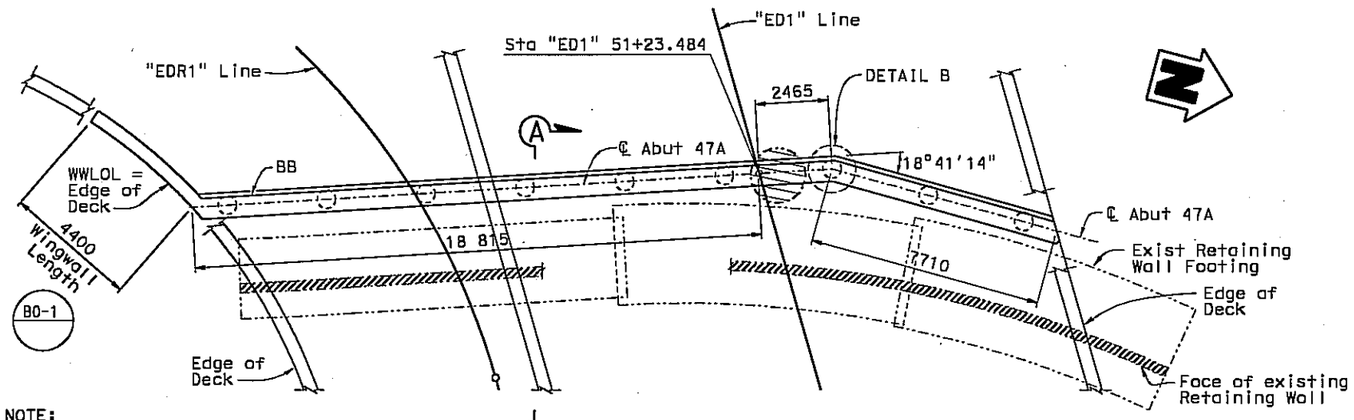

NOTE:
THE CONTRACTOR SHALL VERIFY ALL CONTROLLING FIELD DIMENSIONS BEFORE ORDERING OR FABRICATING ANY MATERIAL.

PLAN
1:100

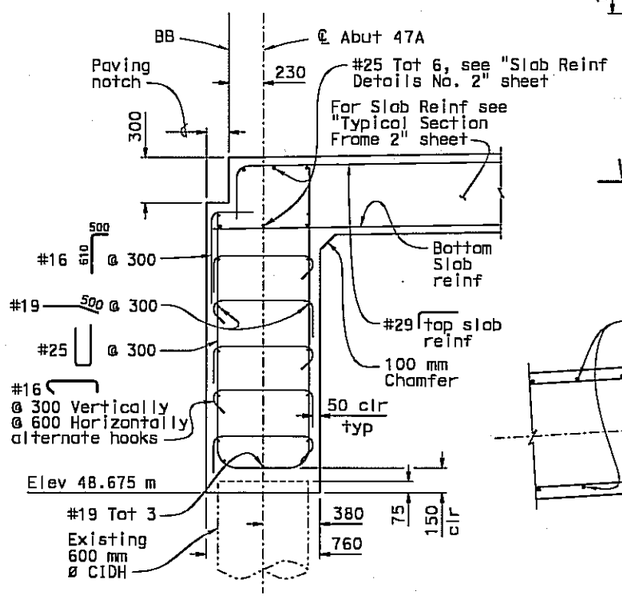

DETAIL A
1:20

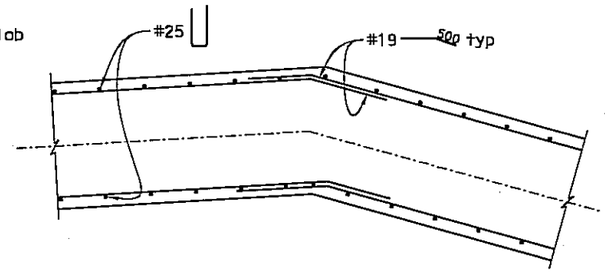

DETAIL B
1:20

DESIGN	BY C. M. Duan	CHECKED M. J. Cullen	STATE OF CALIFORNIA DEPARTMENT OF TRANSPORTATION	DIVISION OF ENGINEERING SERVICES STRUCTURE DESIGN	BRIDGE NO. 34-0006
DETAILS	BY G. M. Souza/S. Jiang	CHECKED M. J. Cullen		DESIGN BRANCH 5	KILOMETER POST 12.6
QUANTITIES	BY C. M. Duan	CHECKED M. J. Cullen			

WEST TIE IN PHASE 2
SOUTH - SOUTH DETOUR
ABUTMENT 47A LAYOUT

Caltrans Metric

ALL DIMENSIONS ARE IN MILLIMETERS UNLESS OTHERWISE SHOWN

ORIGINAL SCALE IN MILLIMETERS FOR REDUCED PLANS 0 10 20 30 40 50 60 70 80 90 100

CU 04251
EA 0120P1

DISREGARD PRINTS BEARING EARLIER REVISION DATES

REVISION DATES								SHEET	OF
07-24-07	07-24-07	08-24-07	12-24-07	12-24-07	07-10-08	2-20-08		32R1	64

FILE => 34-0006-h-b47a-lo_r1.dgn

STRUCTURES DESIGN DETAIL SHEET (METRIC) (REV.03-17-04)

USERNAME => qaouzo DATE PLOTTED => 13-AUG-2008 TIME PLOTTED => 16:43

DIST	COUNTY	ROUTE	KILOMETER POST TOTAL PROJECT	SHEET No	TOTAL SHEETS
04	SF	80	12.6/13.2		

REGISTERED CIVIL ENGINEER 08-11-08 DATE

PLANS APPROVAL DATE

The State of California or its officers or agents shall not be responsible for the accuracy or completeness of electronic copies of this plan sheet.

REGISTERED PROFESSIONAL ENGINEER M. J. CULLEN No. C 40620 Exp. 03-31-09 CIVIL STATE OF CALIFORNIA

Notes:

1. Cut off existing PP 610 x 12.7 at the level of O.G.
2. Soil shall be removed from PP 610 x 12.7 to a maximum elevation of 39.5 m, Inside wall of PP610 x 12.7 shall be cleaned prior to placement of rebar cage and concrete.
3. All Hoops shall be Ultimate Butt Spliced

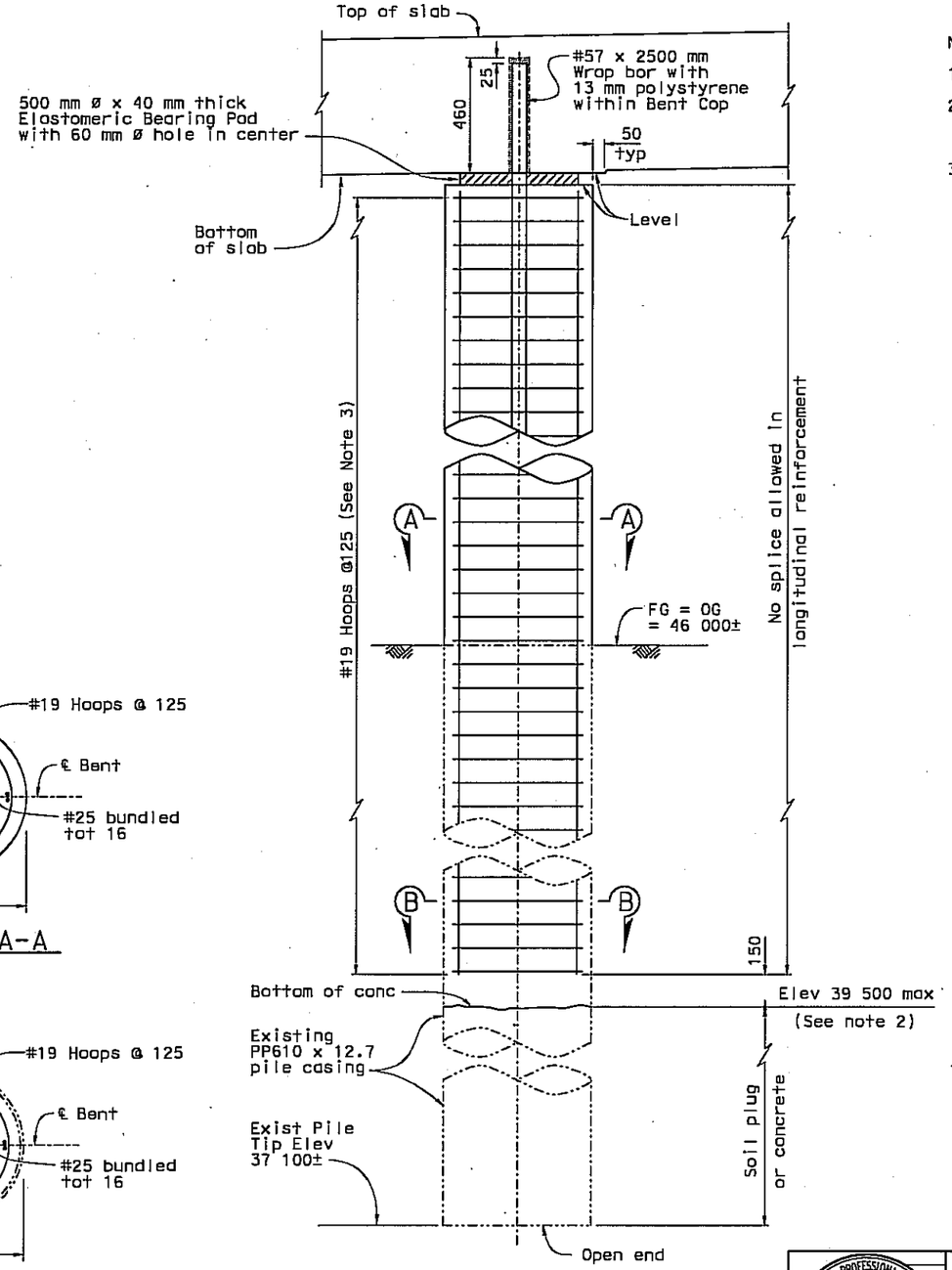

ELEVATION
no scale

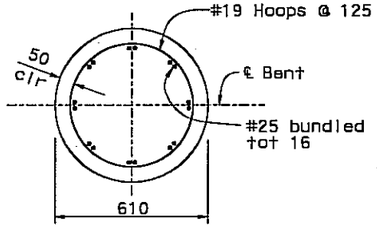

SECTION A-A
no scale

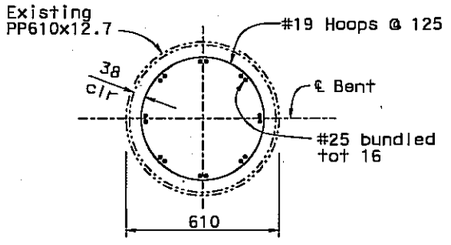

SECTION B-B
no scale

NOTE:
THE CONTRACTOR SHALL VERIFY ALL CONTROLLING FIELD DIMENSIONS BEFORE ORDERING OR FABRICATING ANY MATERIAL.

CISS PIPE PILE & EXTENSION
no scale

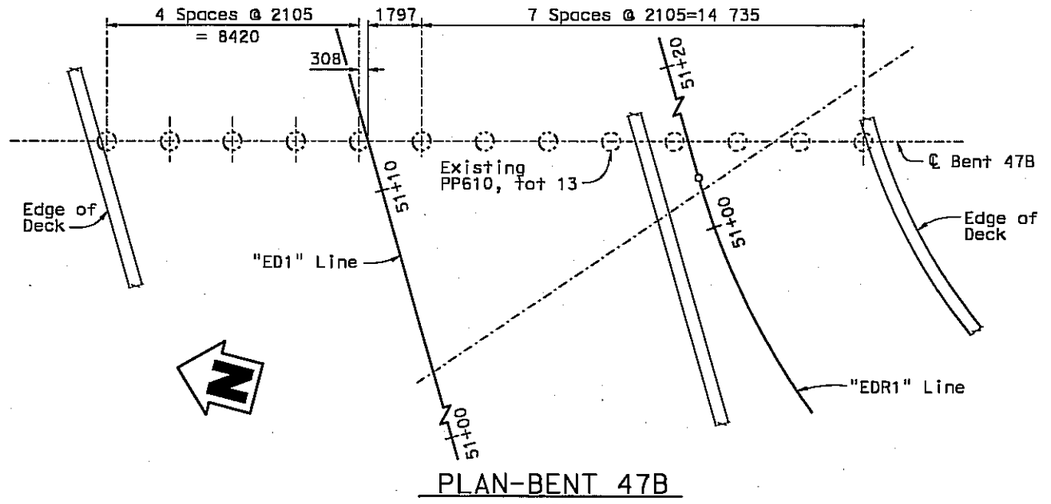

PLAN-BENT 47B
1:100

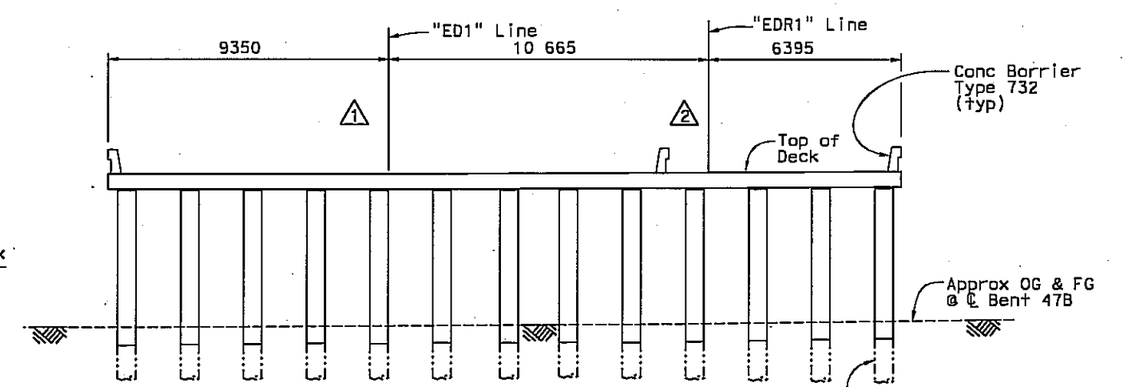

STA "ED1" 51+31.852
ELEVATION-BENT 47B
1:100

REGISTERED PROFESSIONAL ENGINEER M.J. Cullen No. C 40620 Exp. 03-31-09 CIVIL STATE OF CALIFORNIA

MARK	DATE	REVISION(S) DESCRIPTIONS	DES	CHK	DET
2	07-09-08	Eliminate Profile Grade at "EDR1" Line	CD	MC	SJ
1	07-09-08	Eliminate Profile Grade at "ED1" Line	CD	MC	SJ

REGISTERED CIVIL ENGINEER: DATE:

CONTRACT CHANGE ORDER NO. 141
SHEET 13 OF 21

WEST TIE IN PHASE 2
SOUTH - SOUTH DETOUR
BENT 47B LAYOUT

Caltrans Metric

	BY	CHECKED
DESIGN	C. M. Duan	M. J. Cullen
DETAILS	G. M. Souza/S. Jiang	M. J. Cullen
QUANTITIES	C. M. Duan	M. J. Cullen

STATE OF CALIFORNIA
DEPARTMENT OF TRANSPORTATION

DIVISION OF ENGINEERING SERVICES
STRUCTURE DESIGN
DESIGN BRANCH 5

BRIDGE NO. 34-0006
KILOMETER POST 12.6

ALL DIMENSIONS ARE IN MILLIMETERS UNLESS OTHERWISE SHOWN

ORIGINAL SCALE IN MILLIMETERS FOR REDUCED PLANS 0 10 20 30 40 50 60 70 80 90 100

CU 04251
EA 0120P1

DISREGARD PRINTS BEARING EARLIER REVISION DATES

REVISION DATES 09-05-07 09-21-07 09-26-07 09-28-07 12-28-07 12-31-07 01-10-08 08-11-08

SHEET 33R1 OF 64

FILE => 34-0006-h-b47b-lo_r1.dgn

STRUCTURES DESIGN DETAIL SHEET (METRIC) (REV.03-17-04)

USERNAME => asouza DATE PLOTTED => 14-AUG-2008 TIME PLOTTED => 11:26

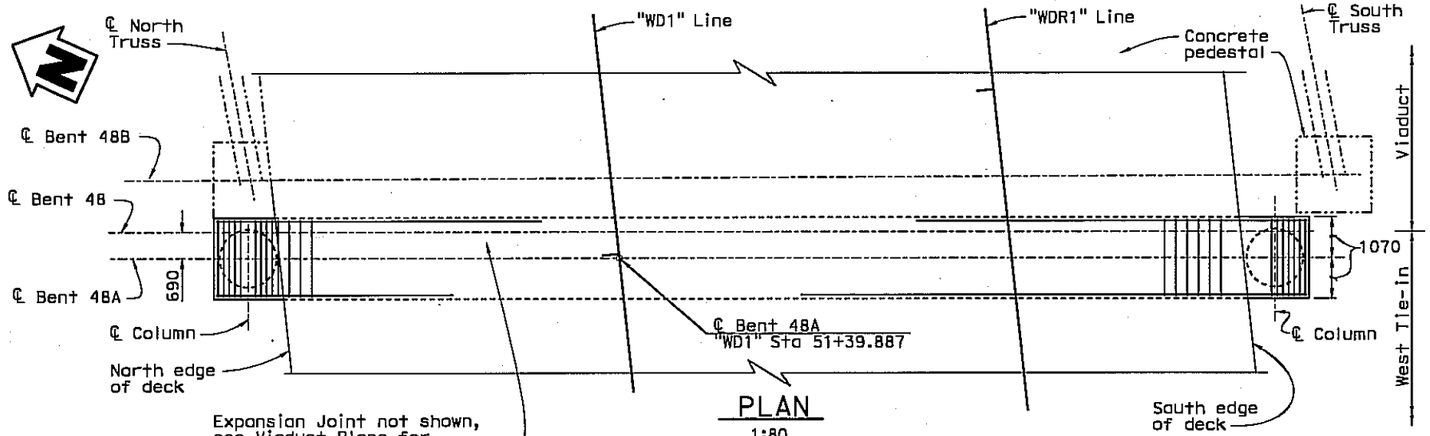

PLAN
1:80

Note: Concrete Barriers not shown for clarity.

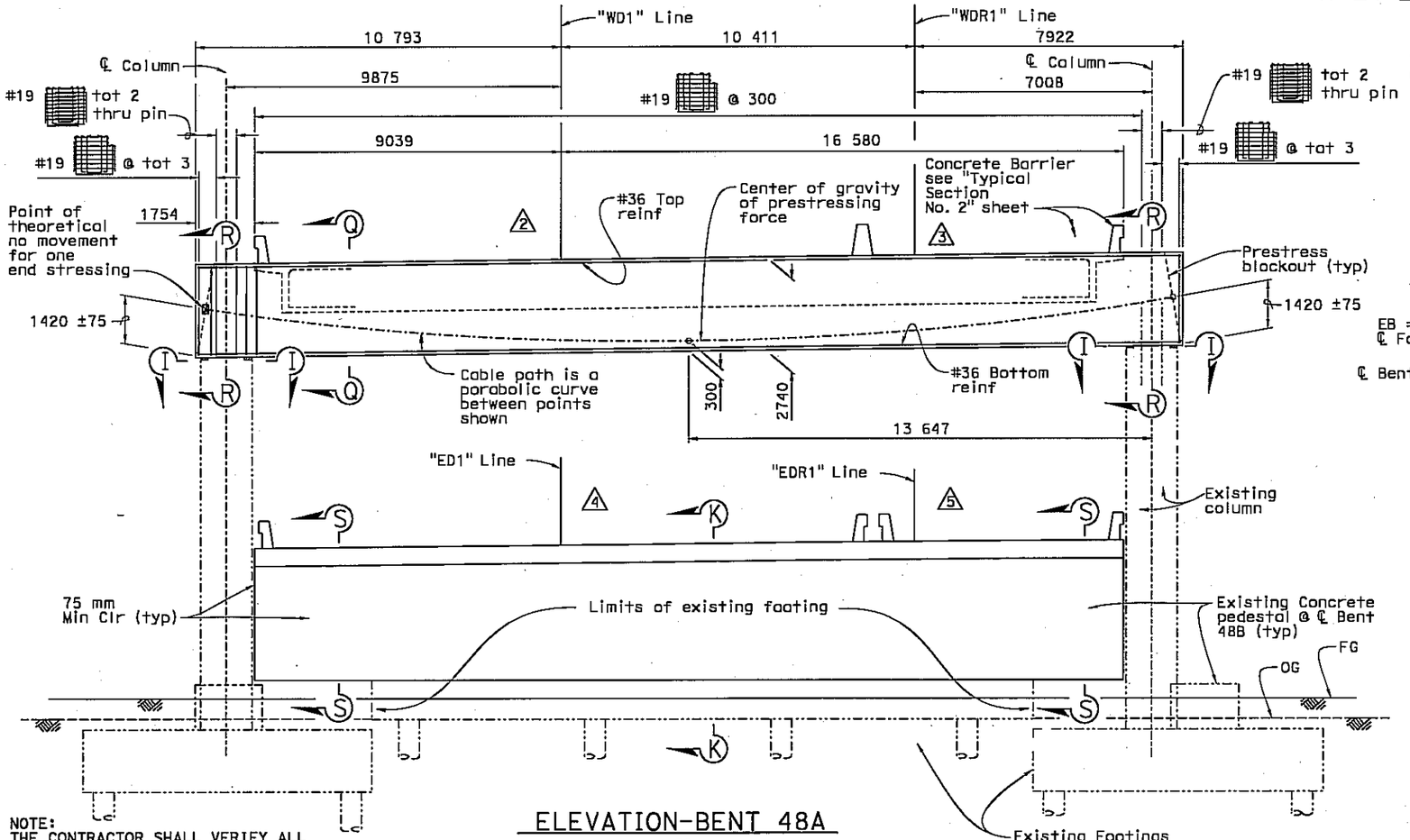

ELEVATION-BENT 48A
1:80
STA "WD1" 51+39.887

NOTE:
THE CONTRACTOR SHALL VERIFY ALL CONTROLLING FIELD DIMENSIONS BEFORE ORDERING OR FABRICATING ANY MATERIAL.

BENT CAP PRESTRESSING NOTES

1860 MPa Low Relaxation Strand:

P_{jack} = 27 500 kN

Anchor Set = 10 mm

Friction Curvature Coefficient (μ) = 0.20

Friction Wobble Coefficient (K) = 6.6×10^{-7}/mm

Concrete: f'_c = 28.0 MPa @ 28 days

f'_{ci} = 25.0 MPa @ time of stressing

Contractor shall submit elongation calculations based on initial stress at

α = 0.730 times jacking stress.

One end stressing shall be performed from Southeast end.

Notes:
1. For Sections O-O & R-R, see "Bent Cap Details No. 5" sheet.
2. For Section I-I see "Column Details No. 1" sheet.

DIST	COUNTY	ROUTE	KILOMETER POST TOTAL PROJECT	SHEET No	TOTAL SHEETS
04	SF	80	12.6/13.2		

08-11-08
REGISTERED CIVIL ENGINEER DATE

PLANS APPROVAL DATE

M. J. CULLEN No. C 40620 Exp. 03-31-09 CIVIL STATE OF CALIFORNIA

The State of California or its officers or agents shall not be responsible for the accuracy or completeness of electronic copies of this plan sheet.

CONTRACT CHANG
ORDER NO. 141
SHEET 14 OF 21

M.J. Cullen No. C 40620 Exp. 03-30-09 CIVIL STATE OF CALIFORNIA

MARK	DATE	REVISION(S) DESCRIPTIONS	DES	CHK	DET
5	07-09-08	Eliminate Profile Grade at "EDR1" Line	CD	MC	TC
4	07-09-08	Eliminate Profile Grade at "ED1" Line	CD	MC	TC
3	07-09-08	Eliminate Profile Grade at "WDR1" Line	CD	MC	TC
2	07-09-08	Eliminate Profile Grade at "WD1" Line	CD	MC	TC
1	03-26-08	Revised EB Location	CD	MC	TC

REGISTERED CIVIL ENGINEER: DATE:

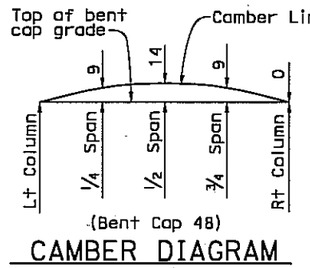

CAMBER DIAGRAM
no scale

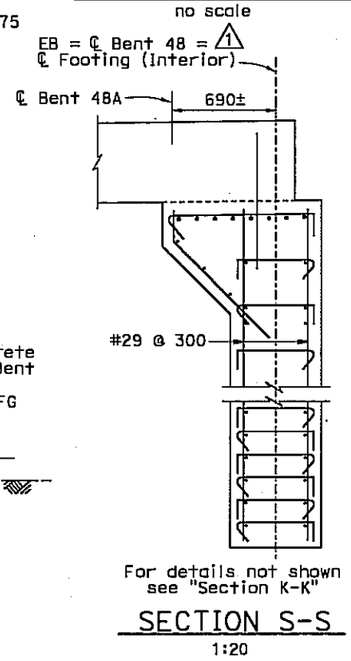

For details not shown see "Section K-K"

SECTION S-S
1:20

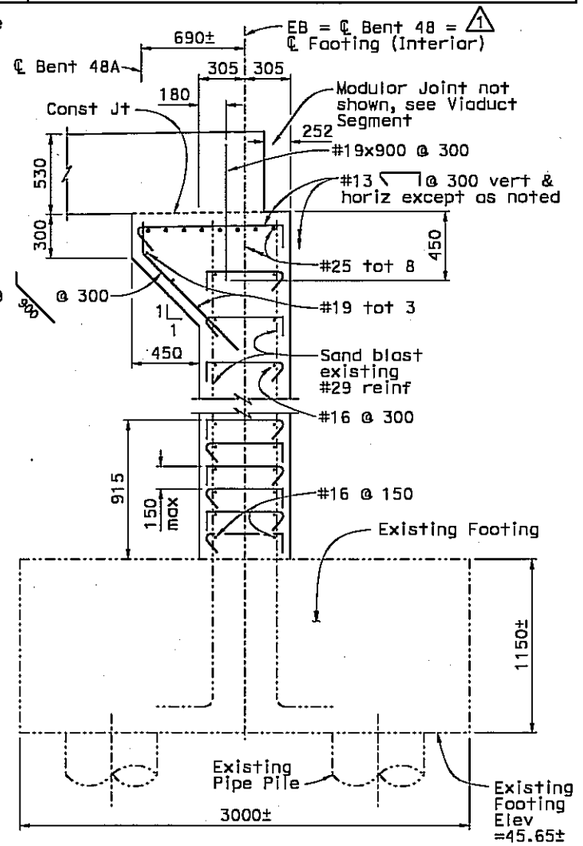

SECTION K-K
1:20

DESIGN	BY C. M. Duan	CHECKED M. J. Cullen	
DETAILS	BY G. M. Souza/SJ/TC	CHECKED M. J. Cullen	
QUANTITIES	BY C. M. Duan	CHECKED M. J. Cullen	

STATE OF CALIFORNIA
DEPARTMENT OF TRANSPORTATION

DIVISION OF ENGINEERING SERVICES
STRUCTURE DESIGN
DESIGN BRANCH 5

BRIDGE NO. 34-0006
KILOMETER POST 12.6

WEST TIE IN PHASE 2
SOUTH - SOUTH DETOUR
BENT 48A LAYOUT

Caltrans Metric

ALL DIMENSIONS ARE IN MILLIMETERS UNLESS OTHERWISE SHOWN

ORIGINAL SCALE IN MILLIMETERS FOR REDUCED PLANS 0 10 20 30 40 50 60 70 80 90 100

CU 04251
EA 0120P1

DISREGARD PRINTS BEARING EARLIER REVISION DATES

REVISION DATES: 05-24-07 | 05-24-01 | 12-24-01 | 01-01-01 | 01-01-02 | 01-01-03 | 01-01-04 | 01-01-05 | 08-11-08

SHEET 34R1 OF 64

STRUCTURES DESIGN DETAIL SHEET (METRIC) (REV.03-17-04)

FILE => 34-0006-h-b48_lo_r1.dgn

USERNAME => qbduza DATE PLOTTED => 14-AUG-2008 TIME PLOTTED => 11:21

DIST	COUNTY	ROUTE	KILOMETER POST TOTAL PROJECT	SHEET No	TOTAL SHEETS
04	SF	80	12.6/13.2		

08-11-08
REGISTERED CIVIL ENGINEER DATE

PLANS APPROVAL DATE

The State of California or its officers or agents shall not be responsible for the accuracy or completeness of electronic copies of this plan sheet.

REGISTERED PROFESSIONAL ENGINEER — M. J. CULLEN — No. C 40620 — Exp. 03-31-09 — CIVIL — STATE OF CALIFORNIA

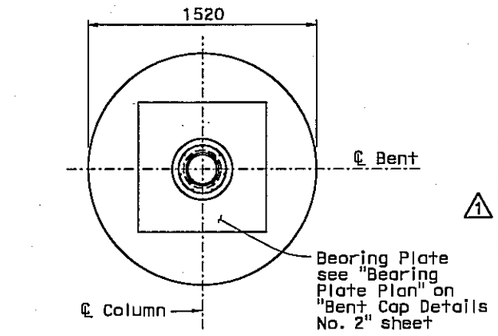

(Columns 40, 41AL, 41BL, 42AL, 42BL, 43AL, 43BL, 44A,L 44BL, 45AL, 45BL & 46R)

SECTION H-H
1:20

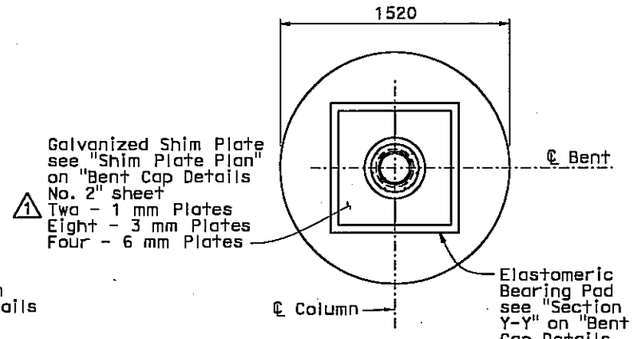

(Column 46L)

SECTION F-F
1:20

Note:

1. Column hoops shall be Ultimate Butt Spliced.
2. For section locations, see " Bent Layout" sheets.

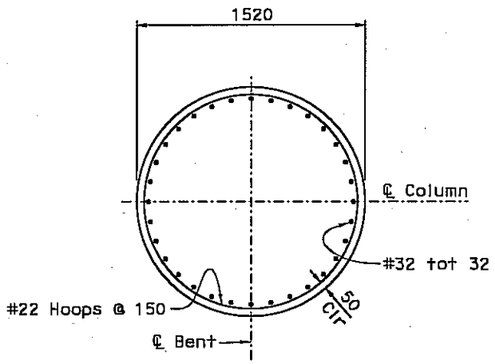

(Columns 40, 41AL, 41BL, 42AL, 42BL, 43AL, 43BL, 44A,L 44BL, 45AL, 45BL & 46R)

SECTION G-G
1:20

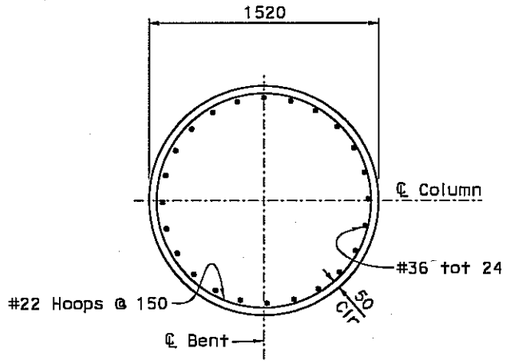

(Columns 46L, 47L & 47R)

SECTION E-E
1:20

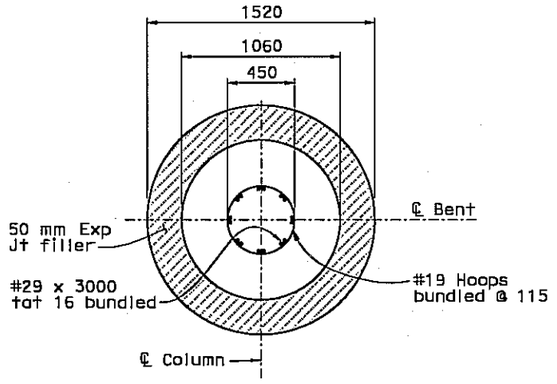

(Columns 47L, 47R, 48L & 48R)

SECTION I-I
1:20

NOTE:
THE CONTRACTOR SHALL VERIFY ALL CONTROLLING FIELD DIMENSIONS BEFORE ORDERING OR FABRICATING ANY MATERIAL.

REGISTERED PROFESSIONAL ENGINEER — M.J. Cullen — No. C 40620 — Exp. 03-31-09 — CIVIL — STATE OF CALIFORNIA

MARK	DATE	REVISION(S) DESCRIPTIONS	DES	CHK	DET
1	07-09-08	Add Details for Shim Plate			

REGISTERED CIVIL ENGINEER: DATE:

CONTRACT CHANGE ORDER NO. 141
SHEET 15 OF 21

Caltrans Metric

	BY	CHECKED
DESIGN	C. M. Duan	G. Schuster
DETAILS	G. S./S. J./A. C.	M. Cullen/G. Schuster
QUANTITIES	C. M. Duan	M. Cullen

ALL DIMENSIONS ARE IN MILLIMETERS UNLESS OTHERWISE SHOWN

ORIGINAL SCALE IN MILLIMETERS FOR REDUCED PLANS 0 10 20 30 40 50 60 70 80 90 100

STATE OF CALIFORNIA
DEPARTMENT OF TRANSPORTATION

DIVISION OF ENGINEERING SERVICES
STRUCTURE DESIGN
DESIGN BRANCH 5

CU 04251
EA 0120P1

BRIDGE NO.	KILOMETER POST
34-0006	12.6

DISREGARD PRINTS BEARING EARLIER REVISION DATES →

WEST TIE IN PHASE 2
SOUTH - SOUTH DETOUR
COLUMN DETAILS NO. 1

REVISION DATES									SHEET	OF
06-13-07	12-14-07	12-14-07	01-04-08	01-04-08	02-01-08	02-21-08	08-11-08		35R1	64

FILE => 34-0006-i_column_det01_r1.dgn

STRUCTURES DESIGN DETAIL SHEET (METRIC) (REV.03-17-04)

USERNAME => dabuza DATE PLOTTED => 13-AUG-2008 TIME PLOTTED => 16:43

DIST	COUNTY	ROUTE	KILOMETER POST TOTAL PROJECT	SHEET No	TOTAL SHEETS
04	SF	80	12.6/13.2		

08-11-08
REGISTERED CIVIL ENGINEER DATE

PLANS APPROVAL DATE

W. J. CULLEN No. C 40620 Exp. 03-31-09 CIVIL — REGISTERED PROFESSIONAL ENGINEER — STATE OF CALIFORNIA

The State of California or its officers or agents shall not be responsible for the accuracy or completeness of electronic copies of this plan sheet.

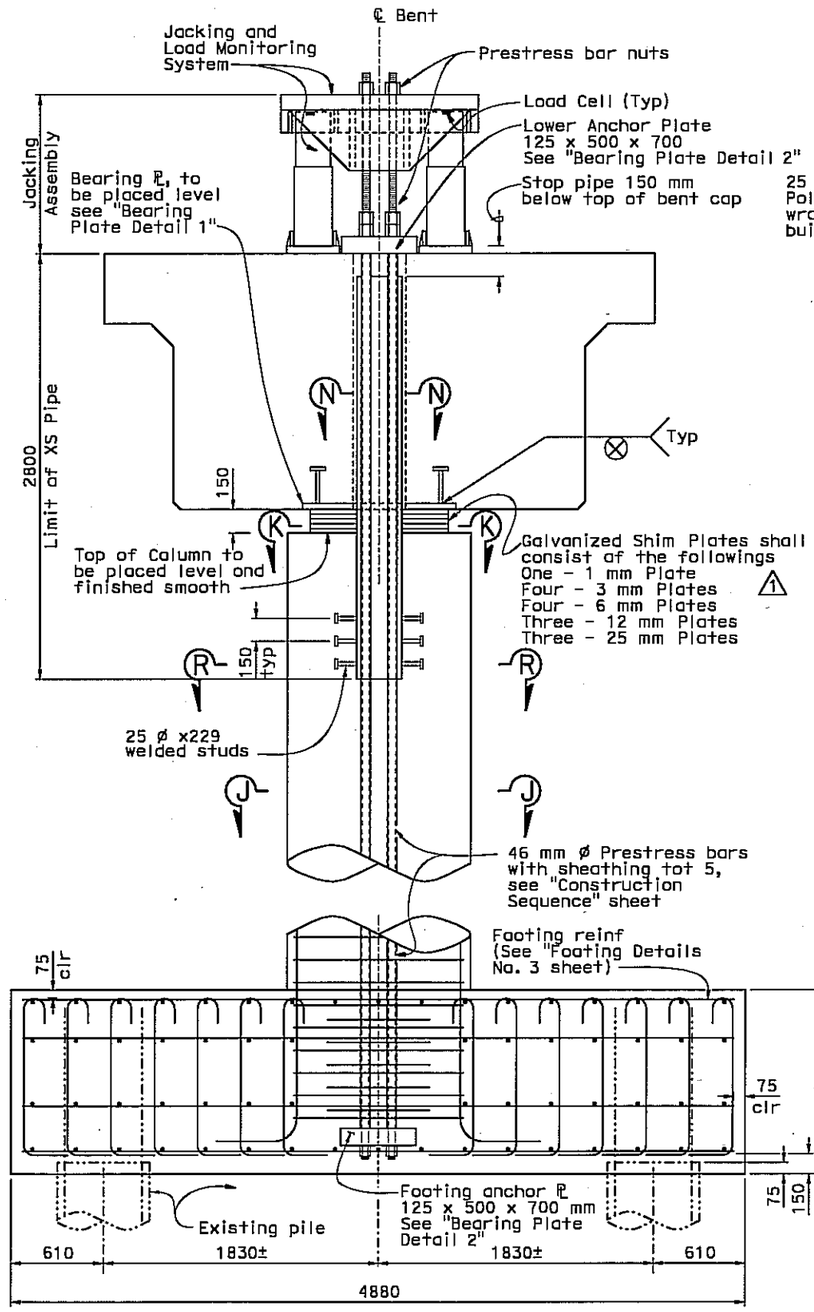

(Typical Tension Column, Columns 40R through 45BR)

ELEVATION
1:20

NOTE:
THE CONTRACTOR SHALL VERIFY ALL CONTROLLING FIELD DIMENSIONS BEFORE ORDERING OR FABRICATING ANY MATERIAL.

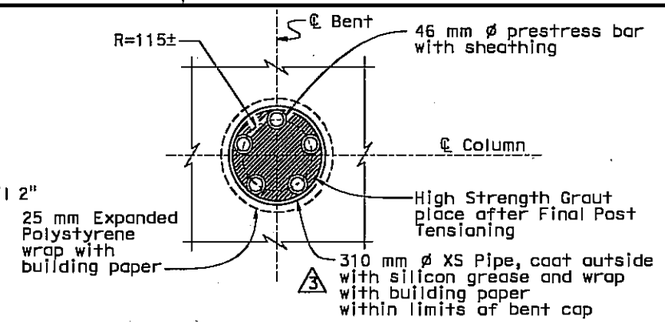

SECTION N-N
1:10

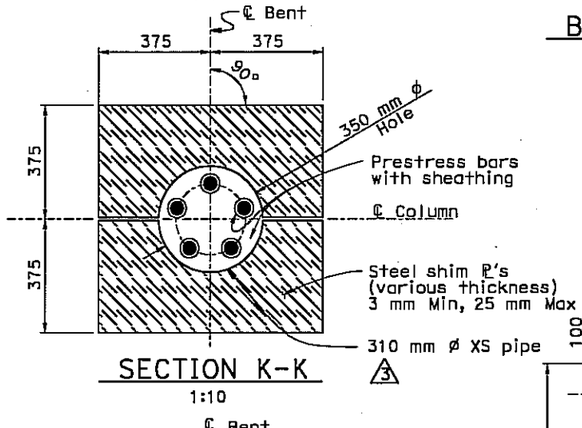

SECTION K-K
1:10

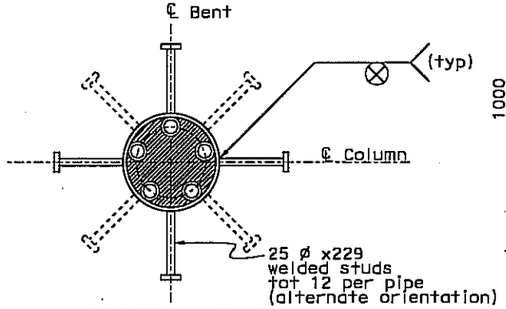

SECTION R-R
1:10

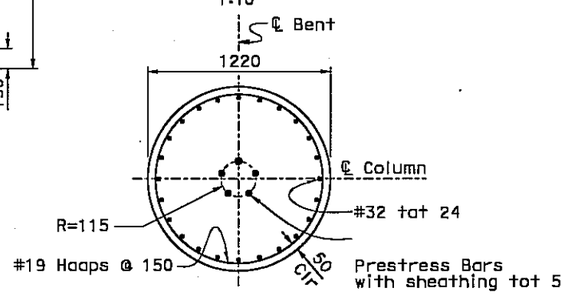

SECTION J-J
1:20

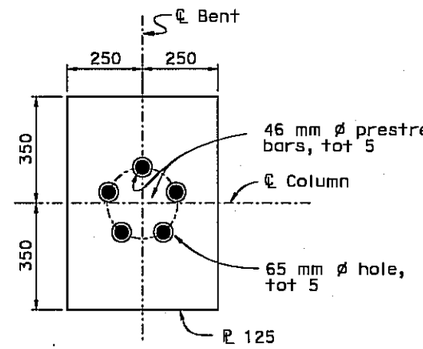

BEARING PLATE DETAILS 2
1:10

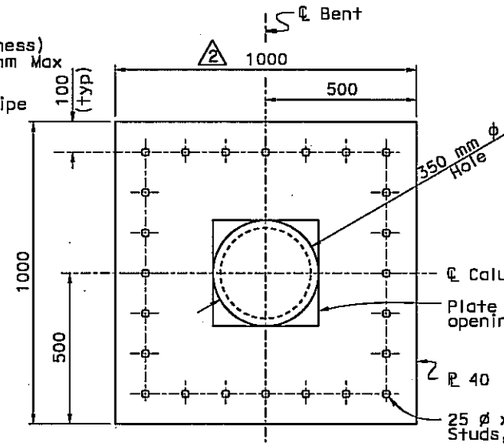

BEARING PLATE DETAIL
1:10

WTI COLUMN 40R THROUGH 45BR FINAL POST TENSIONING PROCEDURE

1. Final Post Tensioning Procedure shall proceed only with approval of the Engineer and after the Structure has displayed adequate stability for 60 day period.
2. Record the loads on the jacks at each location.
3. Jack on additional 600 KN of Force into each Column. Lock jacks rigid and re tighten Lower Anchor Plate nuts to 425 N-m of torque.
4. Grout Prestress Bars and XS Pipe.
5. Remove Jacks.

BENT CAP ADJUSTMENT PROCEDURE (IF REQUIRED)

1. Remove required number of shim plates.
2. Adjust jacks to achieve proper load cell readings and grades as approved by the Engineer.
3. Fill in gap between shim plates and cap soffit.
4. Adjust jacks to achieve adequate bearing between shim plates and cap soffit. Bearing shall be achieved when all gaps between shim plates and soffit have been removed and all plates are snug to one another. Re tighten Lower Anchor Plate Nuts to 425 N-m of torque to reseat anchor Plates.
5. Monitor Structure Stability for 60 days.

M.J. Cullen No. C 40620 Exp. 03-31-09 CIVIL — REGISTERED PROFESSIONAL ENGINEER — STATE OF CALIFORNIA

MARK	DATE	REVISION(S) DESCRIPTIONS	DES	CHK	DET
3	07-09-08	Redefine the name of XS Pipe			
2	07-09-08	Change the size of Bearing Plate			
1	07-09-08	Add Details for Shim Plate			

REGISTERED CIVIL ENGINEER: DATE:

CONTRACT CHANGE ORDER NO. 141
SHEET 16 OF 21

DESIGN	BY C. M. Duan	CHECKED M. J. Cullen	
DETAILS	BY A. Chen/S. Jiang/T. Cotton	CHECKED M. J. Cullen	
QUANTITIES	BY C. M. Duan	CHECKED M. J. Cullen	

Caltrans Metric

STATE OF CALIFORNIA
DEPARTMENT OF TRANSPORTATION

DIVISION OF ENGINEERING SERVICES
STRUCTURE DESIGN
DESIGN BRANCH 5

BRIDGE NO. 34-0006
KILOMETER POST 12.6

WEST TIE IN PHASE 2
SOUTH - SOUTH DETOUR
COLUMN DETAILS NO. 2

ALL DIMENSIONS ARE IN MILLIMETERS UNLESS OTHERWISE SHOWN

ORIGINAL SCALE IN MILLIMETERS FOR REDUCED PLANS 0 10 20 30 40 50 60 70 80 90 100

CU 04251
EA 0120P1

DISREGARD PRINTS BEARING EARLIER REVISION DATES

REVISION DATES: 08-21-07 | 1-25-08 | 1-24-08 | 1-31-08 | 2-21-08

SHEET 36R1 OF 64

FILE => 34-0006-1_column_det02_r1.dgn

STRUCTURES DESIGN DETAIL SHEET (METRIC) (REV.03-17-04)

USERNAME => qbouzo DATE PLOTTED => 13-AUG-2008 TIME PLOTTED => 16:43

DIST	COUNTY	ROUTE	KILOMETER POST TOTAL PROJECT	SHEET No	TOTAL SHEETS
04	SF	80	12.6/13.2		

REGISTERED CIVIL ENGINEER 08-11-08 DATE

PLANS APPROVAL DATE

The State of California or its officers or agents shall not be responsible for the accuracy or completeness of electronic copies of this plan sheet.

REGISTERED PROFESSIONAL ENGINEER M. J. CULLEN No. C 40620 Exp. 03-31-09 CIVIL STATE OF CALIFORNIA

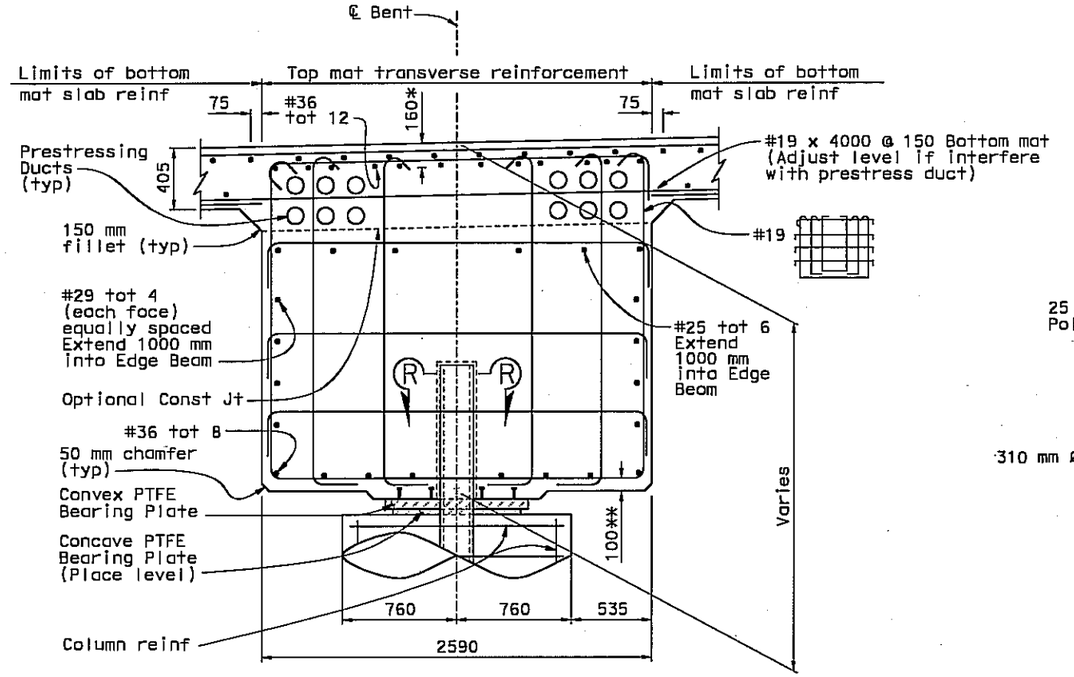

(Bents at left Columns 40~45B and at right Column 46)

SECTION A-A

1:20

* Indicates clearance to top main reinforcement
** Clearance to bottom main reinforcement

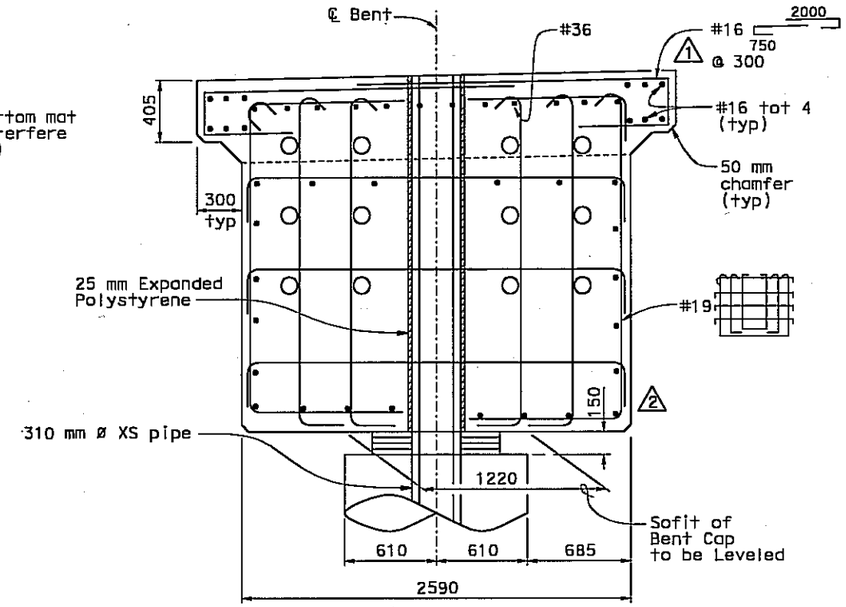

(Bents at right Columns 40~45B)
Note: For details not shown, see "Section A-A"

SECTION B-B

1:20

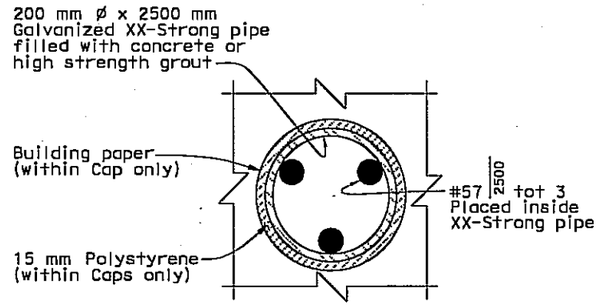

SECTION R-R

1:5

⊗ Place 30 mm Polystyrene above pin

Notes:

1. For column reinforcement details see "Column Details No. 1" & "Column Details No. 2" sheets.
2. Transverse Bent Cap Stirrups may be bent or discontinued to place Prestressing Ducts or steel pipes.
3. All Transverse Bent Cap reinf shall be placed normal to ℄ Bent.
4. For locations of Sections A-A, B-B, C-C and D-D see Bent Cap Layout sheets.

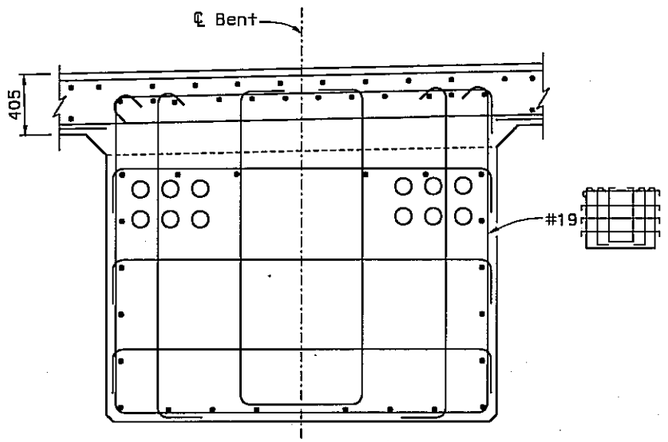

(Bents 40~46)
Note: For details not shown, see "Section A-A"

SECTION C-C

1:20

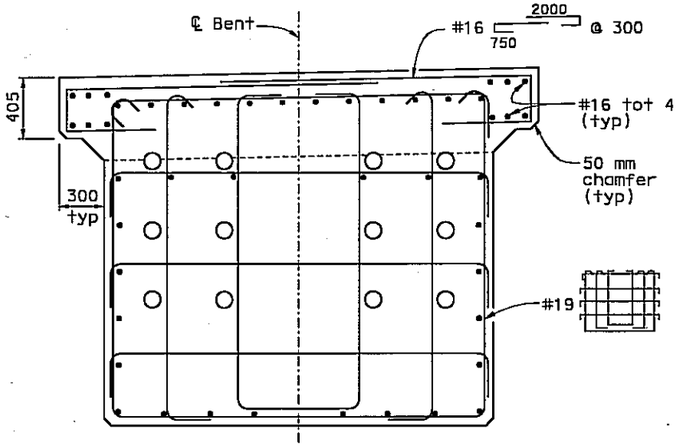

(Bents 40~46)
Note: For details not shown, see "Section A-A"

SECTION D-D

1:20

NOTE:
THE CONTRACTOR SHALL VERIFY ALL CONTROLLING FIELD DIMENSIONS BEFORE ORDERING OR FABRICATING ANY MATERIAL.

REGISTERED PROFESSIONAL ENGINEER M.J. Cullen No. C 40620 Exp. 03-31-09 CIVIL STATE OF CALIFORNIA

MARK	DATE	REVISION(S) DESCRIPTIONS	DES	CHK	DET
2	07-09-08	Change gap between Column top and Cap Soffit			
1	07-09-08	Change Section			

REGISTERED CIVIL ENGINEER: DATE:

CONTRACT CHANGE ORDER NO. 141
SHEET 17 OF 21

Caltrans Metric

	BY	CHECKED
DESIGN	C. M. Duan	M. J. Cullen
DETAILS	G. M. Souza/S. Jiang	M. J. Cullen
QUANTITIES	C. M. Duan	M. J. Cullen

STATE OF CALIFORNIA
DEPARTMENT OF TRANSPORTATION

DIVISION OF ENGINEERING SERVICES
STRUCTURE DESIGN
DESIGN BRANCH 5

BRIDGE NO. 34-0006
KILOMETER POST 12.6

WEST TIE IN PHASE 2
SOUTH - SOUTH DETOUR
BENT CAP DETAILS NO. 1

ALL DIMENSIONS ARE IN MILLIMETERS UNLESS OTHERWISE SHOWN

ORIGINAL SCALE IN MILLIMETERS FOR REDUCED PLANS 0 10 20 30 40 50 60 70 80 90 100

CU 04251
EA 0120P1

DISREGARD PRINTS BEARING EARLIER REVISION DATES

REVISION DATES 05-22-07 02-22-08 08-11-08 12-19-07 12-24-07 12-26-07 01-04-08 01-16-08 01-16-08

SHEET 38R1 OF 64

FILE => 34-0006-1-bent_det01_r1.dgn

STRUCTURES DESIGN DETAIL SHEET (METRIC) (REV.03-17-04)

USERNAME => gsouza DATE PLOTTED => 13-AUG-2008 TIME PLOTTED => 16:43

DIST	COUNTY	ROUTE	KILOMETER POST TOTAL PROJECT	SHEET No	TOTAL SHEETS
04	SF	80	12.6/13.2		

M. J. Cullen 08-11-08
REGISTERED CIVIL ENGINEER DATE

PLANS APPROVAL DATE

The State of California or its officers or agents shall not be responsible for the accuracy or completeness of electronic copies of this plan sheet.

REGISTERED PROFESSIONAL ENGINEER — M. J. CULLEN — No. C 40620 — Exp. 03-31-09 — CIVIL — STATE OF CALIFORNIA

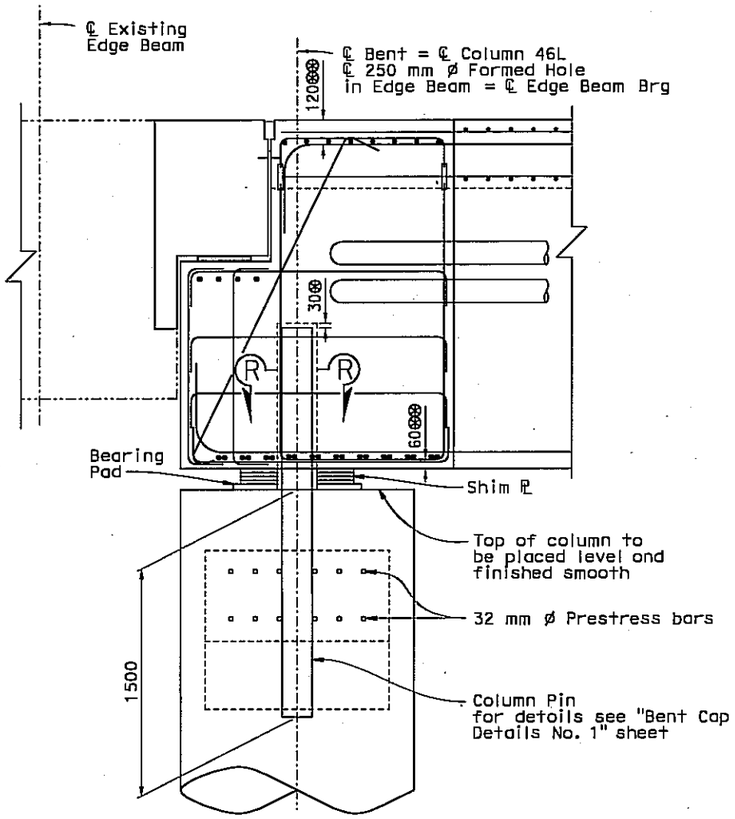

(Bents 46 Left Column)

SECTION W-W

1:20

⊛ Place 30 mm Polystyrene above pin
⊛⊛ Indicates clearance to main reinforcement

For section R-R see "Bent Cap Details No. 1" sheet

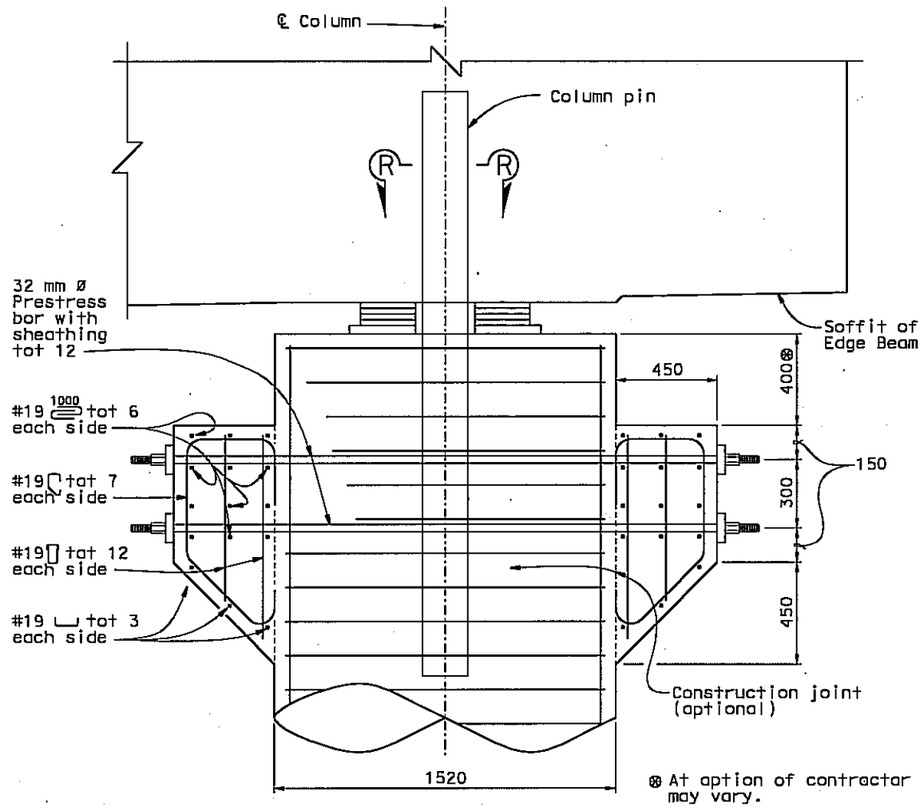

⊛ At option of contractor may vary.

ELEVATION

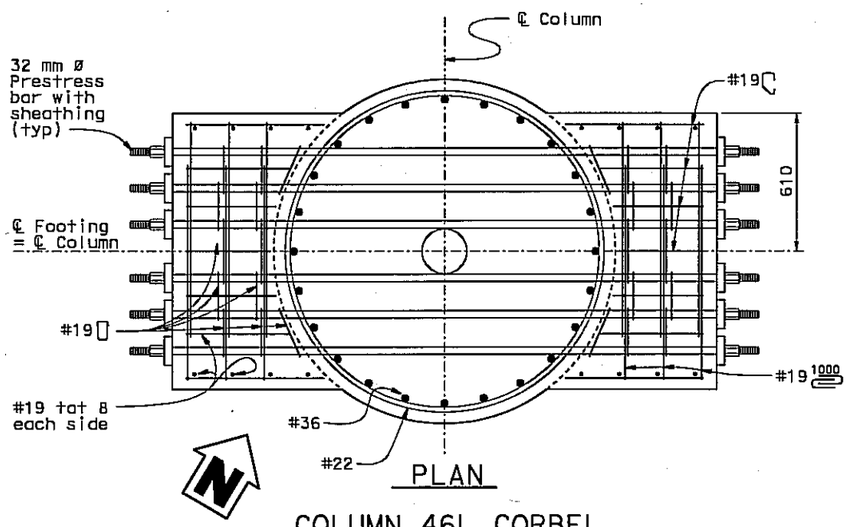

PLAN

COLUMN 46L CORBEL

no scale

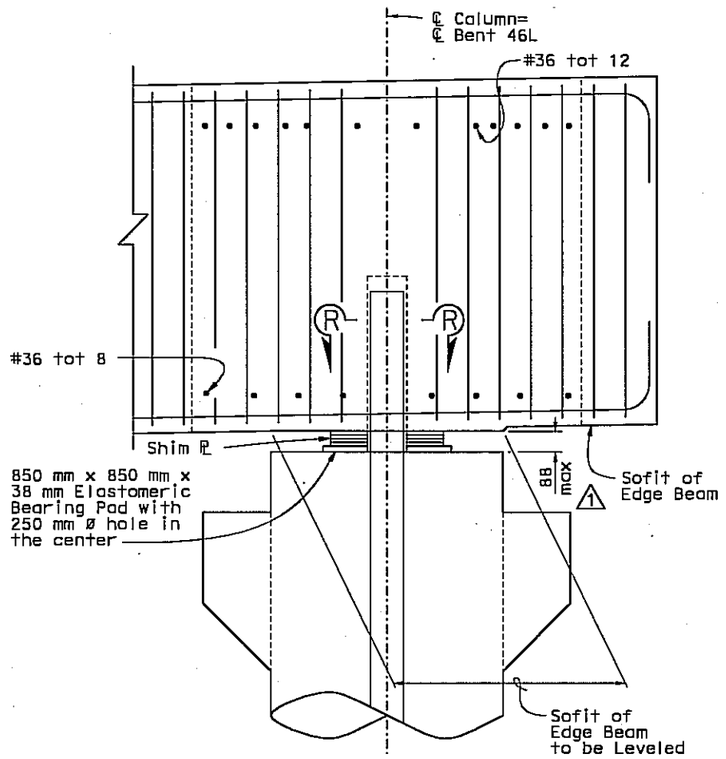

(Bent at Left Column 46)

SECTION Y-Y

1:20

PRESTRESSING NOTES

Prestressing Bars:
32 mm ø Prestress bars shall meet ASTM Designation A722.

Working Force P_f:
P_f = 500 kN Total force per bar after losses.

Per Prestressing Bar:
The total losses in prestressed bars due to creep, shrinkage and elastic shortening of concrete and relaxing of prestressing steel shall be assumed to be 150 MPa.

Stressing Sequence:
One end jacking from either end. Bars shall be grouted after stressing

NOTE:
THE CONTRACTOR SHALL VERIFY ALL CONTROLLING FIELD DIMENSIONS BEFORE ORDERING OR FABRICATING ANY MATERIAL.

REGISTERED PROFESSIONAL ENGINEER — M.J. Cullen — No. C 40620 — Exp. 03-31-09 — CIVIL — STATE OF CALIFORNIA

MARK	DATE	REVISION(S) DESCRIPTIONS	DES	CHK	DET
1	07-09-08	Change the Estimates for the Max Possible Gap			

REGISTERED CIVIL ENGINEER: DATE:

CONTRACT CHANGE ORDER NO. 141
SHEET 18 OF 21

DESIGN	BY C. M. Duan	CHECKED M. J. Cullen	STATE OF CALIFORNIA DEPARTMENT OF TRANSPORTATION	DIVISION OF ENGINEERING SERVICES STRUCTURE DESIGN	BRIDGE NO. 34-0006
DETAILS	BY G. M. Souza/S. Jiang	CHECKED M. J. Cullen		DESIGN BRANCH 5	KILOMETER POST 12.6
QUANTITIES	BY C. M. Duan	CHECKED M. J. Cullen			

Caltrans Metric

ALL DIMENSIONS ARE IN MILLIMETERS UNLESS OTHERWISE SHOWN

ORIGINAL SCALE IN MILLIMETERS FOR REDUCED PLANS 0 10 20 30 40 50 60 70 80 90 100

CU 04251
EA 0120P1

FILE => 34-0006-i-bent_det03_r1.dgn

DISREGARD PRINTS BEARING EARLIER REVISION DATES

REVISION DATES: 06-29-07 | 12-12-07 | 01-31-08 | 01-16-08 | 01-16-08 | 02-21-08 | 08-11-08

SHEET 40R1 OF 64

STRUCTURES DESIGN DETAIL SHEET (METRIC) (REV.03-17-04)

WEST TIE IN PHASE 2
SOUTH - SOUTH DETOUR
BENT CAP DETAILS NO. 3

USERNAME => dsouza DATE PLOTTED => 13-AUG-2008 TIME PLOTTED => 16:43

DIST	COUNTY	ROUTE	KILOMETER POST TOTAL PROJECT	SHEET No	TOTAL SHEETS
04	SF	80	12.6/13.2		

M.J. Cullen 08-11-08
REGISTERED CIVIL ENGINEER DATE

PLANS APPROVAL DATE

The State of California or its officers or agents shall not be responsible for the accuracy or completeness of electronic copies of this plan sheet.

REGISTERED PROFESSIONAL ENGINEER — M. J. CULLEN — No. C 40620 — Exp. 03-31-09 — CIVIL — STATE OF CALIFORNIA

REGISTERED PROFESSIONAL ENGINEER — M.J. Cullen — No. C 40620 — Exp. 03-30-09 — CIVIL — STATE OF CALIFORNIA

MARK	DATE	REVISION(S) DESCRIPTIONS	DES	CHK	DET
1	03-26-08	Revised EB Location	CD	MC	TC

REGISTERED CIVIL ENGINEER: DATE:

Note:

For Girder reinforcement, see "Typical Section No.2" sheet.

CONTRACT CHANGE ORDER NO. 141
SHEET 19 OF 21

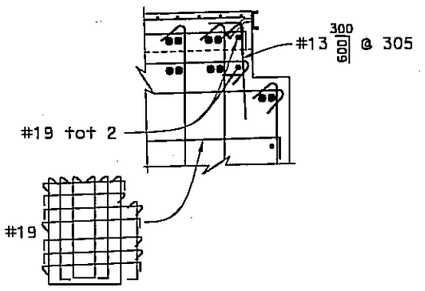

(Between Modular Joint Pivot Box, typ)

DETAIL 1
1:20

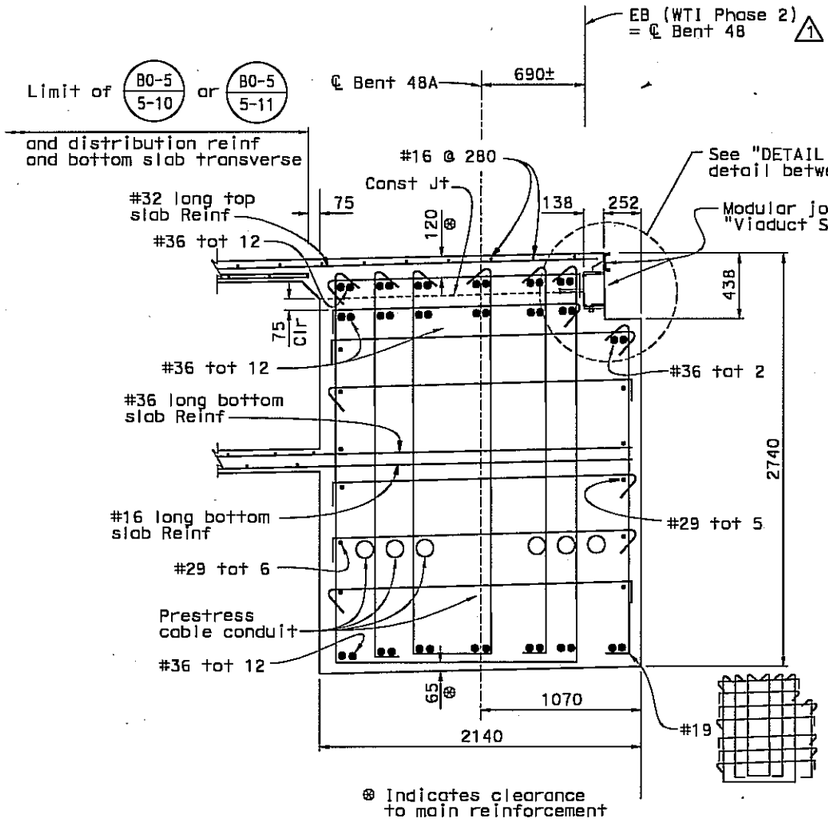

SECTION Q-Q
1:20

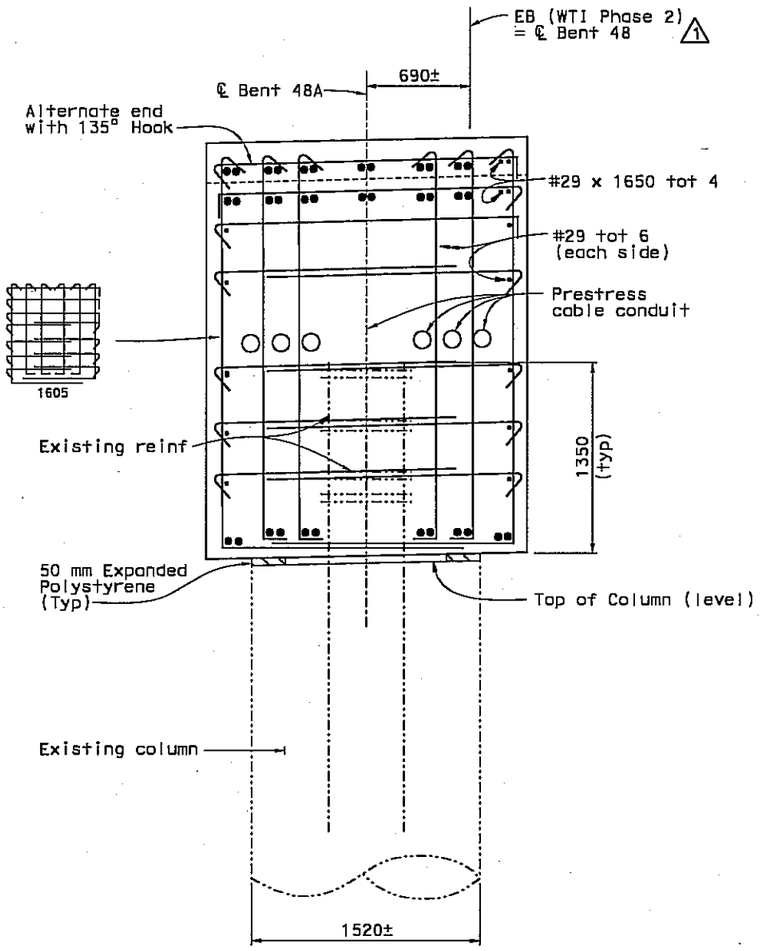

Note: For details not shown, see Section "Q-Q"

SECTION R-R
1:20

NOTE:
THE CONTRACTOR SHALL VERIFY ALL CONTROLLING FIELD DIMENSIONS BEFORE ORDERING OR FABRICATING ANY MATERIAL.

Caltrans Metric

	BY	CHECKED
DESIGN	C. M. Duan	M. J. Cullen
DETAILS	G. Souza/S. Jiang	M. J. Cullen
QUANTITIES	C. M. Duan	M. J. Cullen

ALL DIMENSIONS ARE IN MILLIMETERS UNLESS OTHERWISE SHOWN

ORIGINAL SCALE IN MILLIMETERS FOR REDUCED PLANS 0 10 20 30 40 50 60 70 80 90 100

STATE OF CALIFORNIA
DEPARTMENT OF TRANSPORTATION

DIVISION OF ENGINEERING SERVICES
STRUCTURE DESIGN
DESIGN BRANCH 5

CU 04251
EA 0120P1

FILE => 34-0006-1-bent_det05r1.dgn

BRIDGE NO.	34-0006
KILOMETER POST	12.6

WEST TIE IN PHASE 2
SOUTH - SOUTH DETOUR
BENT CAP DETAILS NO. 5

DISREGARD PRINTS BEARING EARLIER REVISION DATES →

REVISION DATES								SHEET	OF
05-24-07	12-14-07	12-28-07	1-09-08	1-09-08	2-29-08	03-26-08	08-11-08	42R1	64

STRUCTURES DESIGN DETAIL SHEET (METRIC) (REV.03-17-04)

USERNAME => gsouza DATE PLOTTED => 14-AUG-2008 TIME PLOTTED => 11:20

DIST	COUNTY	ROUTE	KILOMETER POST TOTAL PROJECT	SHEET No	TOTAL SHEETS
04	SF	80	12.6/13.2		

08-11-08
REGISTERED CIVIL ENGINEER DATE

PLANS APPROVAL DATE

The State of California or its officers or agents shall not be responsible for the accuracy or completeness of electronic copies of this plan sheet.

REGISTERED PROFESSIONAL ENGINEER — W. J. CULLEN — No. C 40620 — Exp. 03-31-09 — CIVIL — STATE OF CALIFORNIA

Notes;
1. For Deck Drain Details, not shown, see B7-6
2. All pipes to be NPS 6 x 3.42 welded steel pipe.

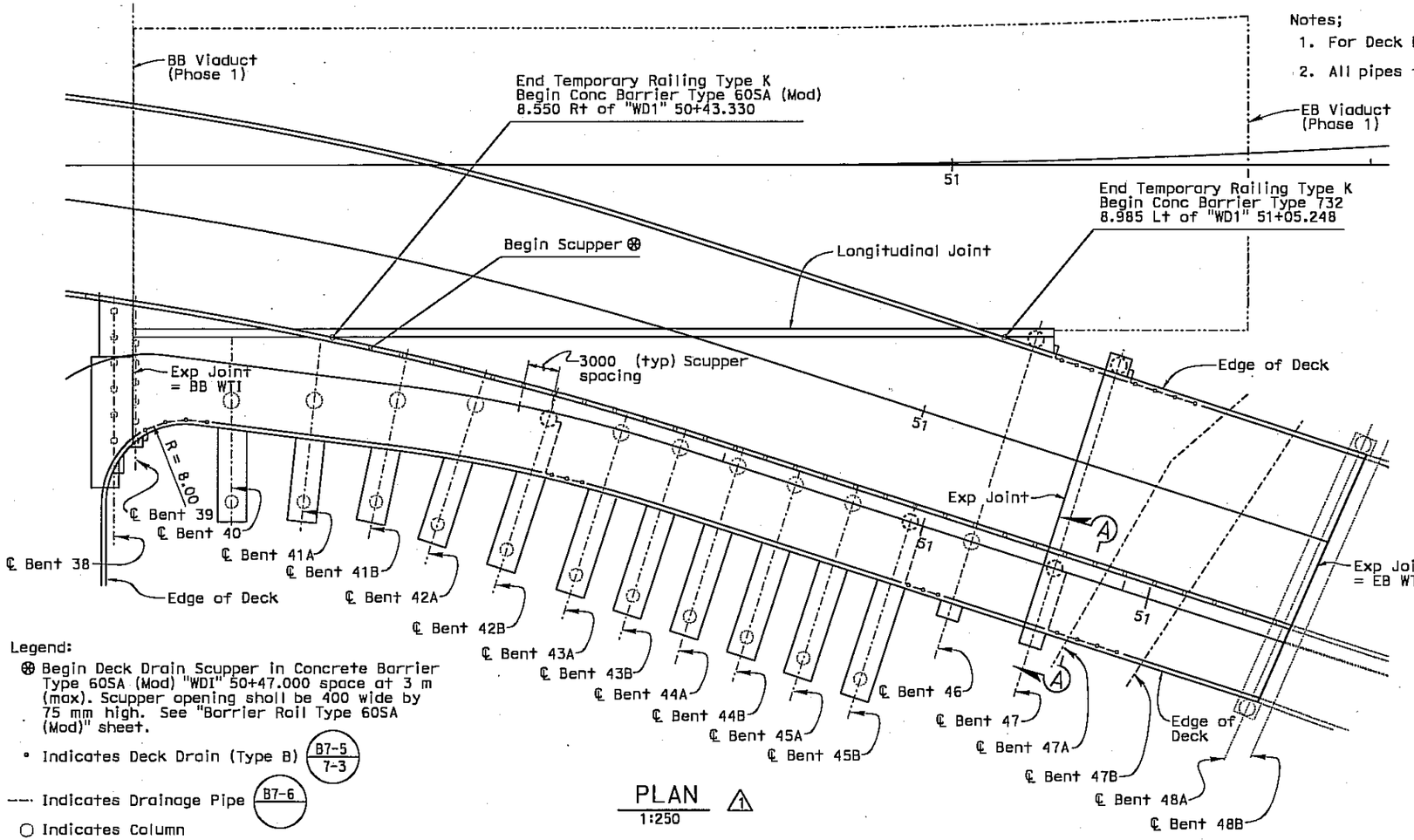

PLAN
1:250

Legend:
⊛ Begin Deck Drain Scupper in Concrete Barrier Type 60SA (Mod) "WD1" 50+47.000 space at 3 m (max). Scupper opening shall be 400 wide by 75 mm high. See "Barrier Rail Type 60SA (Mod)" sheet.
• Indicates Deck Drain (Type B) B7-5 / 7-3
—— Indicates Drainage Pipe B7-6
○ Indicates Column

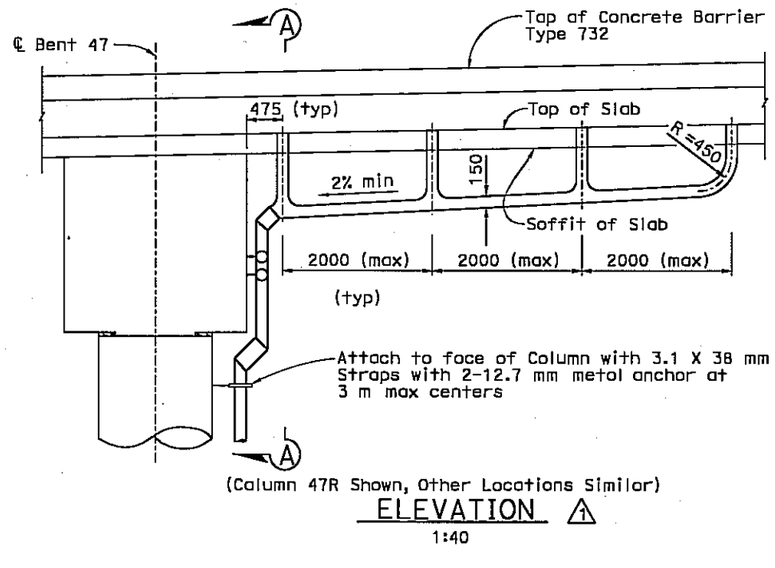

(Column 47R Shown, Other Locations Similar)

ELEVATION
1:40

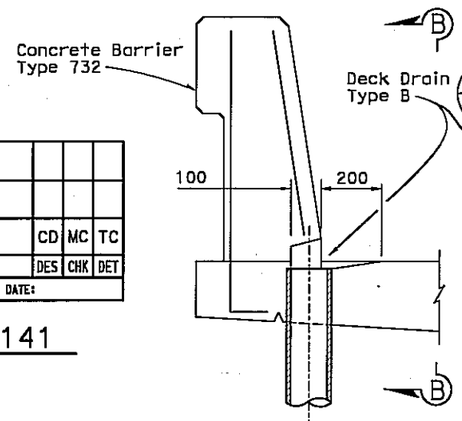

DETAIL A
1:10

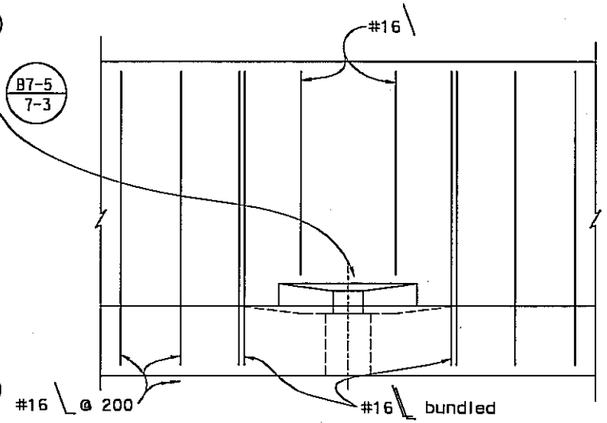

VIEW B-B
1:10

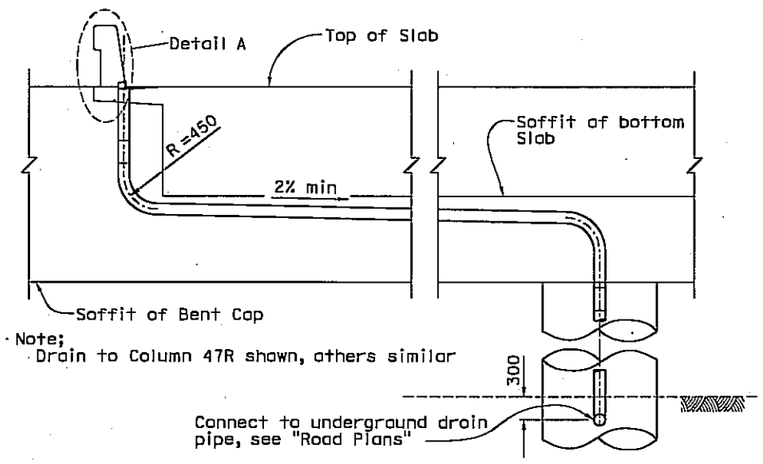

Note;
Drain to Column 47R shown, others similar

VIEW A-A
1:40

MARK	DATE	REVISION(S) DESCRIPTIONS	DES	CHK	DET
1	03-26-08	Added New Plan	CD	MC	TC
		REGISTERED CIVIL ENGINEER:	DATE:		

REGISTERED PROFESSIONAL ENGINEER — M.J. Cullen — No. C 40620 — Exp. 03-30-09 — CIVIL — STATE OF CALIFORNIA

CONTRACT CHANGE ORDER NO. 141
SHEET 20 OF 21

NOTE:
THE CONTRACTOR SHALL VERIFY ALL CONTROLLING FIELD DIMENSIONS BEFORE ORDERING OR FABRICATING ANY MATERIAL.

DESIGN	BY C. M. Duan	CHECKED M. J. Cullen	STATE OF CALIFORNIA DEPARTMENT OF TRANSPORTATION
DETAILS	BY T. Cotton	CHECKED M. J. Cullen	DIVISION OF ENGINEERING SERVICES STRUCTURE DESIGN
QUANTITIES	BY C. M. Duan	CHECKED M. J. Cullen	DESIGN BRANCH 5

Caltrans Metric

ALL DIMENSIONS ARE IN MILLIMETERS UNLESS OTHERWISE SHOWN

ORIGINAL SCALE IN MILLIMETERS FOR REDUCED PLANS 0 10 20 30 40 50 60 70 80 90 100

CU 04251
EA 0120P1

BRIDGE NO.	KILOMETER POST
34-0006	12.6

DISREGARD PRINTS BEARING EARLIER REVISION DATES

REVISION DATES: 02-01-08 | 03-12-08 | 03-18-08 | 03-24-08 | 04-02-08 | 08-11-08

SHEET 56R1 OF 64

WEST TIE IN PHASE 2
SOUTH - SOUTH DETOUR
DECK DRAINAGE DETAILS

FILE => 34-0006-r-drain_dt01r1.dgn

STRUCTURES DESIGN DETAIL SHEET (METRIC) (REV.03-17-04)

USERNAME => qqouzo DATE PLOTTED => 13-AUG-2008 TIME PLOTTED => 16:43

DIST	COUNTY	ROUTE	KILOMETER POST TOTAL PROJECT	SHEET No	TOTAL SHEETS
04	SF	80	12.6/13.2		

08-11-08
REGISTERED CIVIL ENGINEER DATE

PLANS APPROVAL DATE

The State of California or its officers or agents shall not be responsible for the accuracy or completeness of electronic copies of this plan sheet.

M. J. CULLEN No. C 40620 Exp. 03-31-09 CIVIL — REGISTERED PROFESSIONAL ENGINEER — STATE OF CALIFORNIA

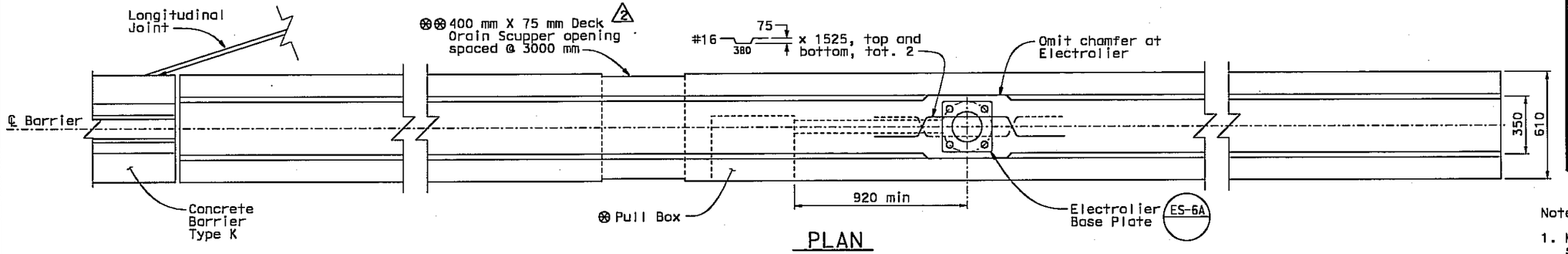

PLAN
no scale

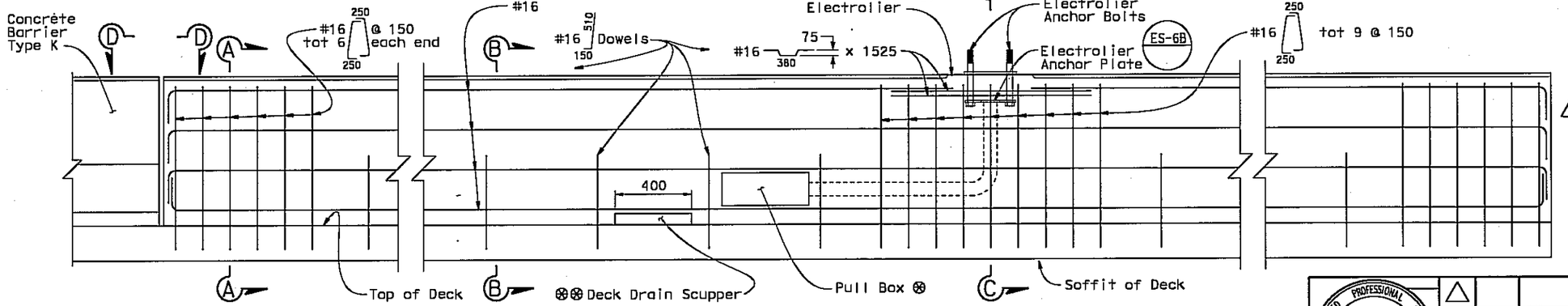

ELEVATION
no scale

Notes:

1. Modified Concrete Barrier Type 60SA should meet all specifications in Standard Plans except as noted.
2. Top Longitudinal Reinforcement discontinued within the limit of Electrolier Anchor Plate.

⊛ For location of Pull Boxes, see "Electrical Plans".

⊛⊛ For locations of Deck Drain Scuppers, see"Deck Drainage Details" sheet.

MARK	DATE	REVISION(S) DESCRIPTIONS	DES	CHK	DET
2	03-24-08	Added Note			
1	03-24-08	Added Deck Drain Scupper	CD	MC	TC

REGISTERED CIVIL ENGINEER: DATE:

M.J. Cullen No. C 40620 Exp. 03-31-09 CIVIL — REGISTERED PROFESSIONAL ENGINEER — STATE OF CALIFORNIA

CONTRACT CHANGE ORDER NO. 141
SHEET 21 OF 21

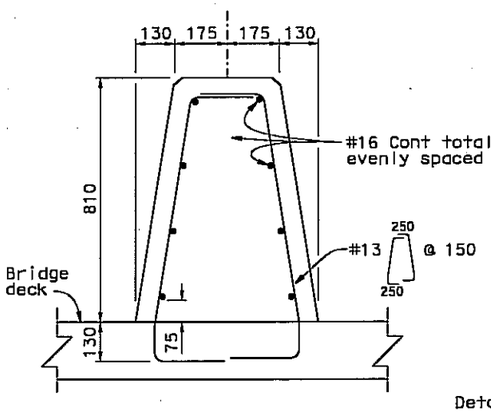

SECTION A-A
1:10

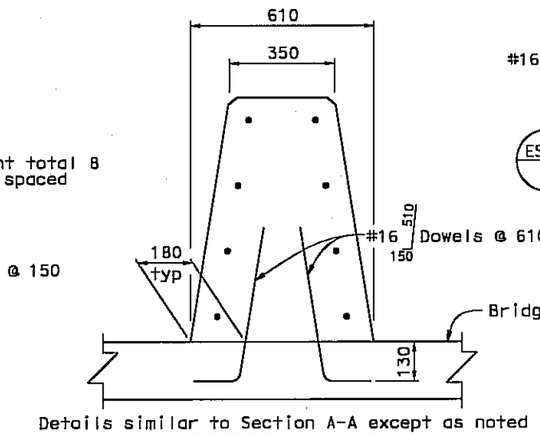

Details similar to Section A-A except as noted

SECTION B-B
1:10

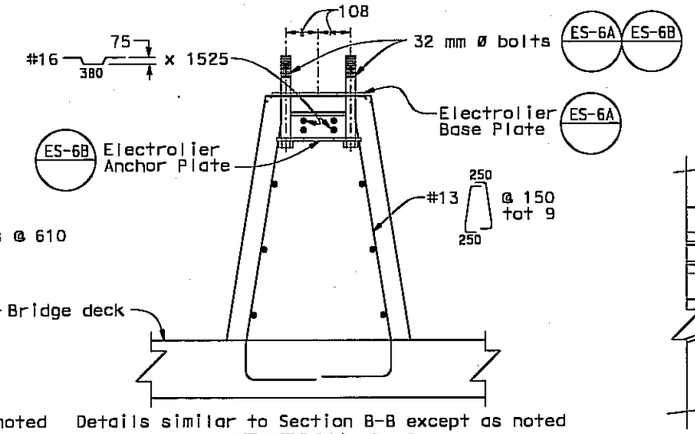

Details similar to Section B-B except as noted

SECTION C-C
1:10

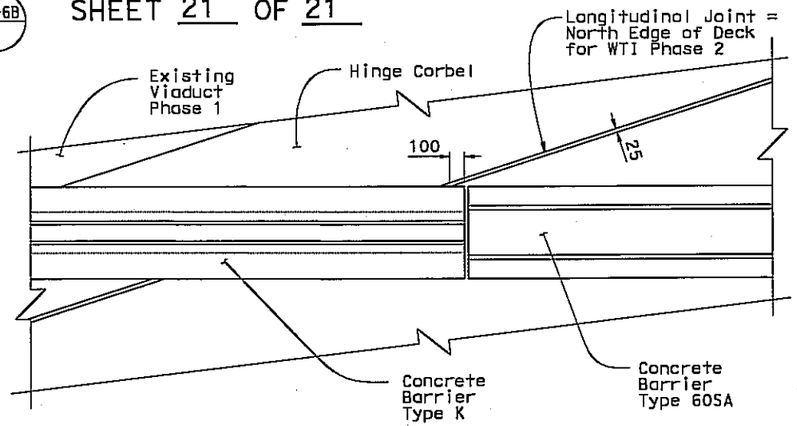

VIEW D-D
1:20

NOTE:
THE CONTRACTOR SHALL VERIFY ALL CONTROLLING FIELD DIMENSIONS BEFORE ORDERING OR FABRICATING ANY MATERIAL.

DESIGN	BY C. M. Duan	CHECKED M. Cullen	
DETAILS	BY G. M. Souza/S. Jiang	CHECKED M. Cullen	
QUANTITIES	BY C. M. Duan	CHECKED M. Cullen	

STATE OF CALIFORNIA
DEPARTMENT OF TRANSPORTATION

DIVISION OF ENGINEERING SERVICES
STRUCTURE DESIGN
DESIGN BRANCH 5

BRIDGE NO. 34-0006
KILOMETER POST 12.6

WEST TIE IN PHASE 2
SOUTH - SOUTH DETOUR
MODIFIED CONCRETE BARRIER TYPE 60SA

ALL DIMENSIONS ARE IN MILLIMETERS UNLESS OTHERWISE SHOWN

ORIGINAL SCALE IN MILLIMETERS FOR REDUCED PLANS 0 10 20 30 40 50 60 70 80 90 100

CU 04251
EA 0120P1

FILE => 34-0006-r-type60scmadr1.dgn

DISREGARD PRINTS BEARING EARLIER REVISION DATES

REVISION DATES: 02-04-08 | 02-12-08 | 02-22-08 | 03-04-08 | 03-24-08 | 08-11-08

SHEET 58R1 OF 64

STRUCTURES DESIGN DETAIL SHEET (METRIC) (REV.03-17-04)

USERNAME => gsouza
DATE PLOTTED => 13-AUG-2008
TIME PLOTTED => 16:44

STATE OF CALIFORNIA - DEPARTMENT OF TRANSPORTATION

CONTRACT CHANGE ORDER MEMORANDUM

TO: MIKE FORNER / DEANNA VILCHECK	FILE: E.A. 04 - 0120R4
FROM: BILL CASEY	CO-RTE-PM SF-80-12.6/13.2
	FED. NO. ACBRIM-080-1(097)N
CCO#: 141 SUPPLEMENT#: 1 Category Code: BZZZ	CONTINGENCY BALANCE (incl. this change) **$56,808,143.60**
COST: **$1,500,000.00** INCREASE ☑ DECREASE ☐	HEADQUARTERS APPROVAL REQUIRED? ☑ YES ☐ NO
SUPPLEMENTAL FUNDS PROVIDED: **$0.00**	IS THIS REQUEST IN ACCORDANCE WITH ENVIRONMENTAL DOCUMENTS? ☑ YES ☐ NO
CCO DESCRIPTION: WTI Superstruc Load Transfer Incentive	**PROJECT DESCRIPTION:** CONSTRUCT ROUTE 80 TEMP BYPASS STRUCTURE

Original Contract Time:	Time Adj. This Change:	Previously Approved CCO Time Adjustments:	Percentage Time Adjusted: (including this change)	Total # of Unreconciled Deferred Time CCO(s): (including this change)
475 Day(s)	**DEF** Day(s)	**1195** Day(s)	**252** %	**8**

THIS CHANGE ORDER PROVIDES FOR:

This change provides for payment for contractor incentives for early completion of the construction work as specified in Contract Change Order 141 as related to the West Tie-In Phase 2 superstructure of the Temporary Bypass Structure (Bridge # 34-0006 (TEMP)).

This project, the Temporary Bypass Structure (TBS), was awarded in March 2004 to construct a detour that will allow for the tie in of the new east span of the San Francisco Oakland Bay Bridge to Yerba Buena Island. The TBS encompasses three main structures, the East Tie-In to the existing bridge, the West Tie-In (WTI) to Yerba Buena Island, and the Viaduct structure between the two tie ins.

A December 14, 2006 Department strategy memorandum, approved by Tony Anziano, Toll Bridge Program Manager, and Richard Land, Chief Engineer, recommended that the Department assume the design responsibility for the East Tie-In (ETI) structure. Based on this memorandum, the design of the structure was changed from a design that incorporated the existing steel truss bridge with the new structure to a design that replaces the existing structure with a new structure (roll out / roll in).

This supplemental was anticipated by the original Contract Change Order No. 141, which has been approved and executed. Approval for this change order from the TBPOC was granted on November 14, 2008. As such it is not necessary for the Contractor to sign this supplemental, which will be processed unilaterally. Compensation for this change shall be performed as an Adjustment of Compensation at Agreed Unit Price for a total cost of $1,500,000.00, which can be financed through the Contingency Fund.

Adjustment of contract time is deferred pending completion of the work specified in this change as it may become the controlling operation in accordance with Section 8-1.07 "Liquidated Damages", of the Standard Specifications and Section 10-1.20 "Time Related Overhead (TRO)" of the Special Provisions.

Compensation for delays resulting from this work will be made in accordance with Section 8-1.09 "Right of Way Delays" of the Standard Specifications and Section 10-1.20 "Time Related Overhead" of the Special Provisions.

This change was concurred with by Alec Melkonians - Asst. Project Manager and Hong Wong - Project Engineer.

Maintenance concurrence is not required, as this work does not affect any permanent roadway features.

ADA Notice: For individuals with sensory disabilities, this document is available in alternate formats. For information call: (916) 654-6410 or TDD (916) 654-3880 or write

CONTRACT CHANGE ORDER MEMORANDUM

CONCURRED BY:

Construction Engineer:	Bill Casey, Resident Engineer	Date 5-14-09
Bridge Engineer:		Date
Project Engineer:	Hong Wong, PE	Date 5/13/09
Project Manager:	Alec Melkonians	Date 5/13/09
FHWA Rep.:		Date
Environmental:		Date
Other (specify):		Date
Other (specify):		Date
District Prior Approval By:		Date
HQ (Issue Approve) By:	Bob Molera, HQ CCO Engineer	Date
Resident Engineer's Signature:		Date 5-14-09

ESTIMATE OF COST

ITEMS	THIS REQUEST	TOTAL TO DATE
FORCE ACCOUNT	$0.00	$0.00
AGREED PRICE	$0.00	$500,000.00
ADJUSTMENT	$0.00	$12,700,000.00
TOTAL	$1,500,000.00	$1,500,000.00
	$1,500,000.00	$14,700,000.00

FEDERAL PARTICIPATION

☐ PARTICIPATING ☐ PARTICIPATING IN PART ☑ NONE
☐ NON-PARTICIPATING (MAINTENANCE) ☐ NON-PARTICIPATING

FEDERAL SEGREGATION (if more than one Funding Source or P.I.P. type)
☐ CCO FUNDED PER CONTRACT ☐ CCO FUNDED AS FOLLOWS

FEDERAL FUNDING SOURCE	PERCENT

ADA Notice: For individuals with sensory disabilities, this document is available in
Records and Forms Management

CONTRACT CHANGE ORDER

Change Requested by: Engineer

CCO 142	Suppl. No. 0	Contract No. 04 - 0120R4	Road SF-80-12.6/13.2	FED. AID LOC.: ACBRIM-080-1(097)N

To: **CC MYERS INC**

You are directed to make the following changes from the plans and specifications or do the following described work not included in the plans and specifications for this contract. ***NOTE: This change order is not effective until approved by the Engineer.***

Description of work to be done, estimate of quantities and prices to be paid. (Segregate between additional work at contract price, agreed price and force account.) Unless otherwise stated, rates for rental of equipment cover only such time as equipment is actually used and no allowance will be made for idle time. This last percentage shown is the net accumulated increase or decrease from the original quantity in the Engineer's Estimate.

Extra Work at Force Account:

As determined by the Engineer and as shown on Sheets 4 through 5 of this change order, repair Macalla Road's pavement structural section along the existing shoreline retaining wall and at the existing abandoned utility vault, as well as construct a new drainage system to accommodate stormwater sheet flow in the area.

All preparatory and incidental work due to this repair, to include but not limited to potholing, traffic control, installing a vibration monitoring system, and installing permanent roadway features shall be coordinated with the Engineer and will be paid for under this change order.

Estimated Cost of Extra Work at Force Account $150,000.00

Estimated Cost: **Increase** ☑ **Decrease** ☐ **$150,000.00**

By reason of this order the time of completion will be adjusted as follows: 0 days

Submitted by

Signature	Resident Engineer	Date
	BILL CASEY	7-2-08

Approval Recommended by

Signature	Area Construction Manager	Date
	DENNIS TURCHON	7/2/08

Engineer Approval by

Signature	Area Construction Manager	Date
	DENNIS TURCHON	

We the undersigned contractor, have given careful consideration to the change proposed and agree, if this proposal is approved, that we will provide all equipment, furnish the materials, except as may otherwise be noted above, and perform all services necessary for the work above specified, and will accept as full payment therefor the prices shown above.

NOTE: If you, the contractor, do not sign acceptance of this order, your attention is directed to the requirements of the specifications as to proceeding with the ordered work and filing a written protest within the time therein specified.

Contractor Acceptance by

Signature	(Print name and title)	Date
	DANIEL E. Hunck, President	7/10/08

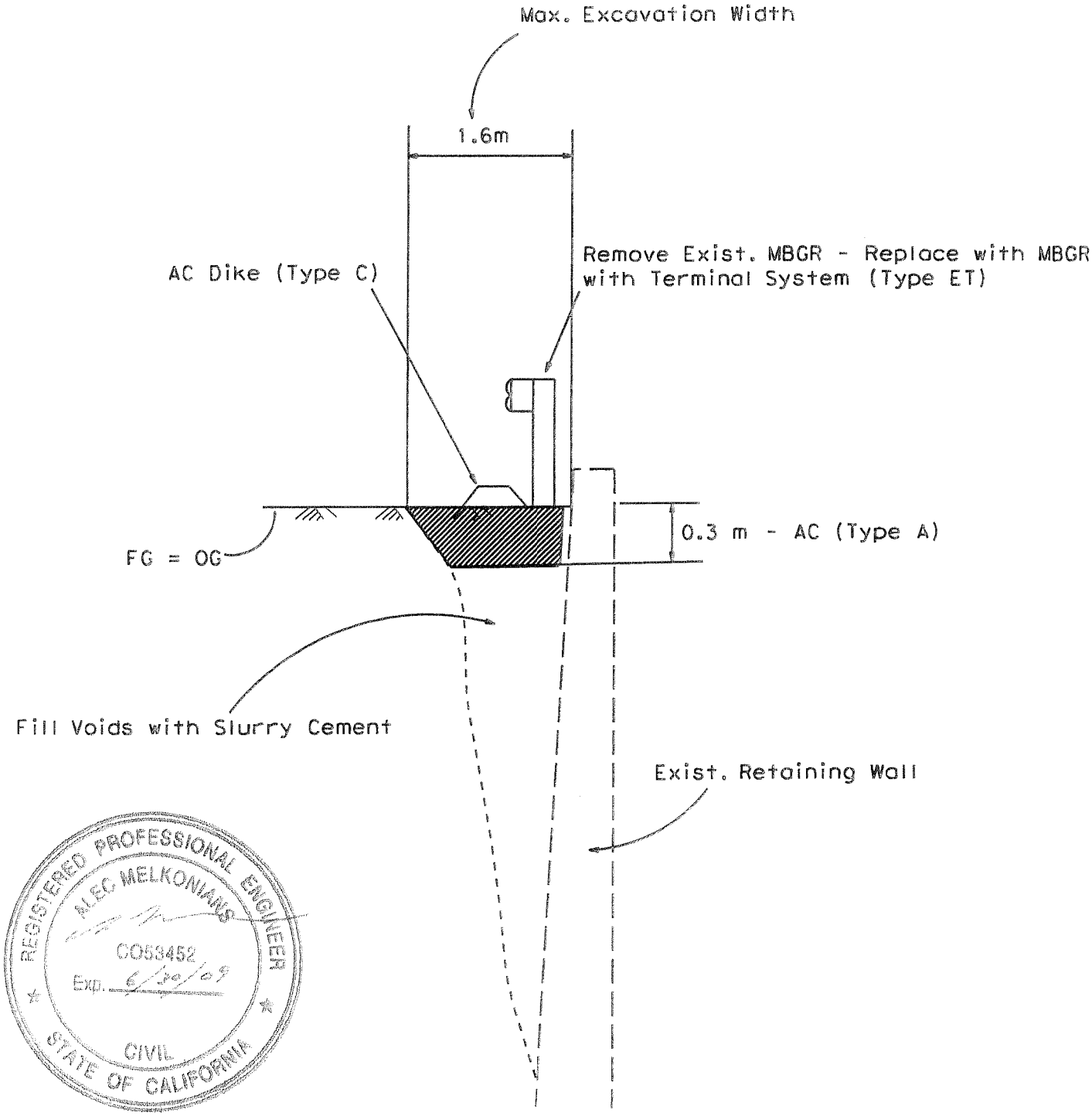

REGISTERED PROFESSIONAL ENGINEER
ALEC MELKONIANS
C053452
Exp. 6/30/09
CIVIL
STATE OF CALIFORNIA

Typical Cross Section
Macalla Road Repairs

b03-07.dgn 5/14/2008 8:28:58 AM

CONTRACT NO. 04-0120R4

CONTRACT CHANGE ORDER NO 142

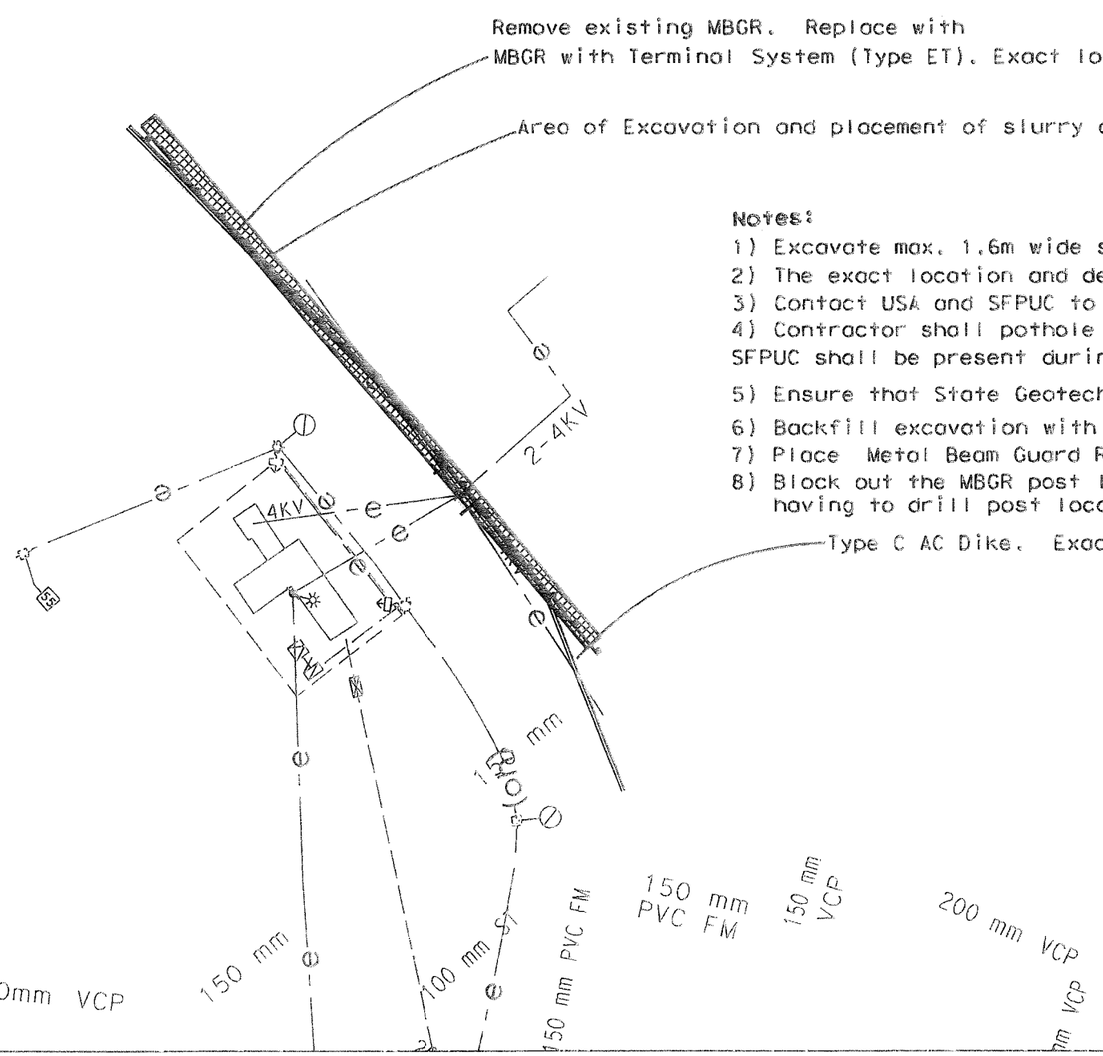

Notes:

1) Excavate max. 1.6m wide strip at the face and along the entire length of the wall to determine the extent of voids.
2) The exact location and depth of the excavation to be determined by the Engineer.
3) Contact USA and SFPUC to ascertain the location of all adjacent utilities prior to any excavation work.
4) Contractor shall pothole the location of the utilities at the direction of the Engineer. SFPUC shall be present during potholing work.
5) Ensure that State Geotech. Engr. and SFPUC Representative are on-site prior to, and during, the excavation work.
6) Backfill excavation with slurry cement, topped by 0.3m AC (Type A). See typical cross section plan.
7) Place Metal Beam Guard Railing with Terminal System (Type ET) along the entire length of the wall.
8) Block out the MBGR post location during the placement of slurry cement backfill to avoid having to drill post location later.

REGISTERED PROFESSIONAL ENGINEER
ALEC MELKONIANS
C053452
Exp. 6/30/09
CIVIL
STATE OF CALIFORNIA

S1_Exist_Electric.dgn 5/14/2008 8:38:44 AM

CONTRACT NO. 04-0120R4

CONTRACT CHANGE ORDER NO. 142

SHEET 3 OF 5

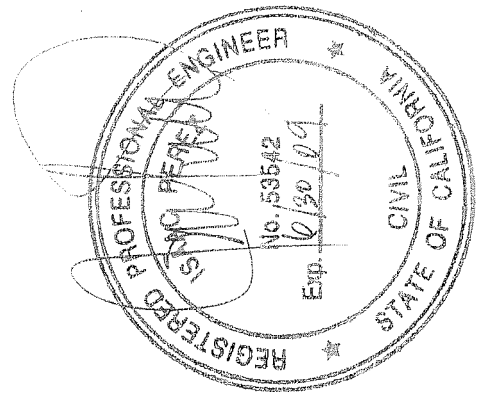

CONTRACT NO. 04-0120R4

CONTRACT CHANGE ORDER NO 142

SHEET 4 OF 5

CONTRACT NO. 04-0120R4

CONTRACT CHANGE ORDER NO 142

SHEET 5 OF 5

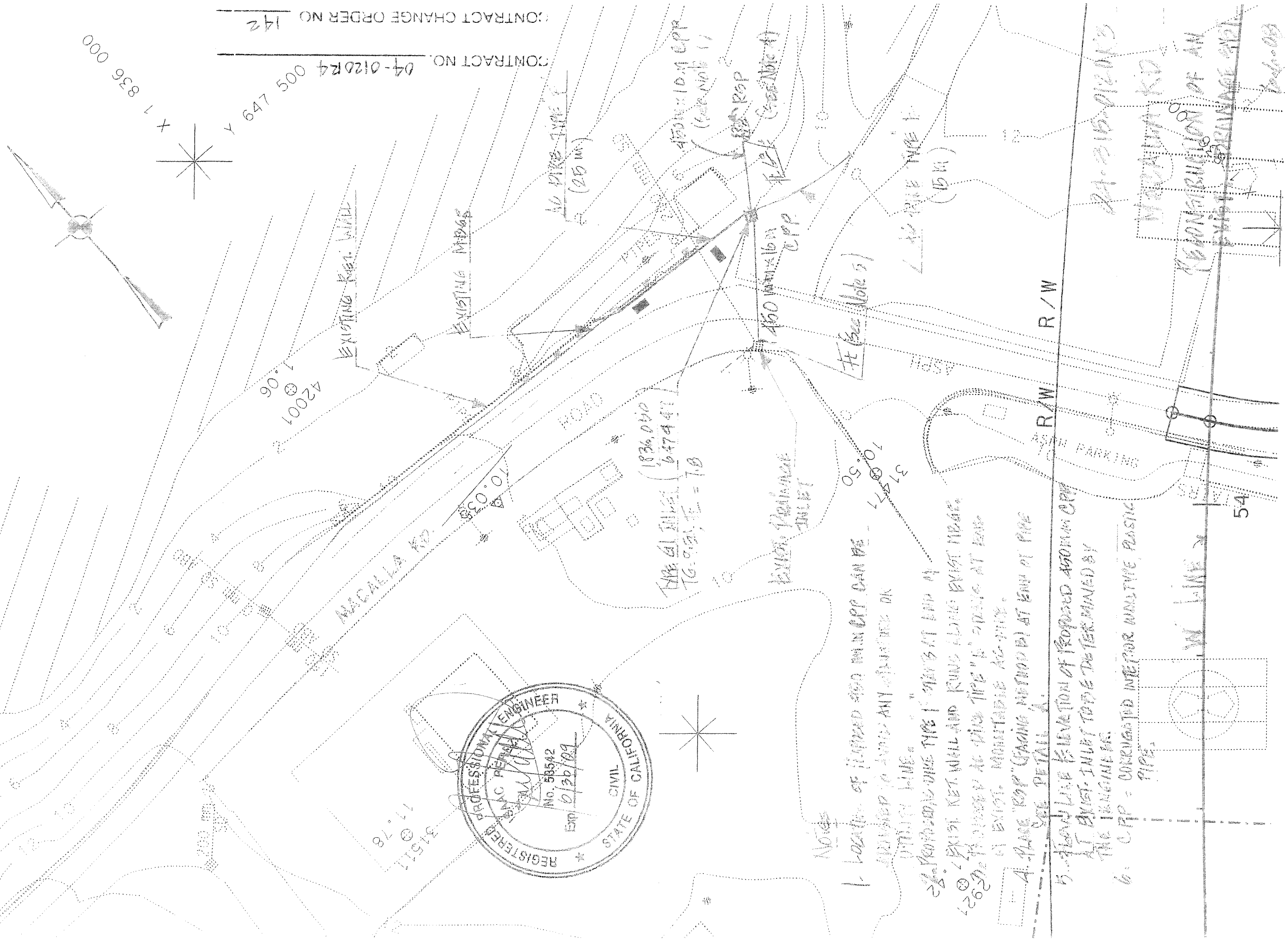

CONTRACT CHANGE ORDER

Change Requested by: Engineer

CCO 143	Suppl. No. 0	Contract No. 04 - 0120R4	Road SF-80-12.6/13.2	FED. AID LOC.: ACBRIM-080-1(097)N

To: **CC MYERS INC**

You are directed to make the following changes from the plans and specifications or do the following described work not included in the plans and specifications for this contract. ***NOTE: This change order is not effective until approved by the Engineer.***

Description of work to be done, estimate of quantities and prices to be paid. (Segregate between additional work at contract price, agreed price and force account.) Unless otherwise stated, rates for rental of equipment cover only such time as equipment is actually used and no allowance will be made for idle time. This last percentage shown is the net accumulated increase or decrease from the original quantity in the Engineer's Estimate.

Eliminate the following roadway work on the EM Line and WM Line and delete the contract bid items for the West Tie-In roadway as listed below:

1) Eliminate the construction of the 50 mm AC (Type A) and 200 mm Rapid Strength Concrete roadway section (Structural Section Type 2) and the 50 mm AC (Type A) and 410 mm PCC roadway section (Structural Section Type 5) from EM Line Sta. 49+78 to Sta. 50+55.

2) Eliminate the placement of the AC (Type) (Structural Section Type 4) from WM Line Sta. 49+62.80 to Sta. 51+50.80.

3) Eliminate the reconstruction of Southgate Road.

4) Delete the contract bid items for the original scope of work pertaining to the construction of the ED1 Line eastbound mainline, the EDR1 Line eastbound on ramp, the T4 eastbound on ramp detour and the WDR1 westbound off ramp roadway sections.

Estimate of Decrease in Contract Item at Contract Price:

Item No. 44: ROADWAY EXCAVATION						
-2713 M3	(–100.00%)	$60.00	/M3	=	–$162,780.00	(–200.00%)
Item No. 59: REPLACE CONCRETE PAVEMENT						
-212 M3	(–100.00%)	$600.00	/M3	=	–$127,200.00	(–100.00%)
Item No. 86: COLD PLANE ASPHALT CONCRETE PAVEMENT						
-1153 M2	(–100.00%)	$18.00	/M2	=	–$20,754.00	(–200.00%)
Item No. 87: ASPHALT CONCRETE (TYPE A)						
-2200 TONN	(–100.00%)	$100.00	/TONN	=	–$220,000.00	(–200.00%)
Item No. 93: RECONSTRUCT SOUTHGATE ROAD						
-1 LS	(–100.00%)	$100,000.00	/LS	=	–$100,000.00	(–200.00%)

Estimated total cost for Decrease in Contract Item.....($630,734.00)

Extra Work at Lump Sum:

Construct the ED1 Line eastbound mainline, the EDR1 Line eastbound on ramp, the T4 eastbound on ramp detour and the WDR1 westbound off ramp roadways and the drainage system along the ED1 Line as shown on the contract plans and as modified on Sheets No. 3 through 13 of this change order.

Modifications to the construction of these roadways and drainage systems include the following items of work:

1) Perform asphalt concrete grinding, including grinding of the concrete skid track foundations constructed under Change Order No. 84, and place asphalt concrete in order to conform the existing EM Line roadway to the ED1 Line roadway.

2) Modify the profile of the ED1 Line and EDR1 Line roadways in accordance with the grid grades as shown.

3) Modify the conform of the EDR1 Line on ramp roadway.

4) Stage the roadway construction of the ED1 Line, EDR1 Line, WDR1 Line and the T4 Line roadways as shown.

CONTRACT CHANGE ORDER

Change Requested by: Engineer

CCO 143	Suppl. No. 0	Contract No. 04 - 0120R4	Road SF-80-12.6/13.2	FED. AID LOC.: ACBRIM-080-1(097)N

5) Furnish and install all culvert and inlets and connect the culvert to the existing corrugated metal pipe as shown.

All revisions shown on Sheets No. 3 through 13 of this change order shall supersede the original contract plans.

For this work, the Contractor shall be compensated an agreed lump sum of $787,170.00. This lump sum constitutes full and final compensation, including all markups, for this work.

The lump sum price above excludes any costs associated with the placement of concrete barrier (Type K), signing, pavement delineation and crash cushions for the ED1 Line, EDR1 and WDR1 Lines. These costs shall be paid under a separate change order. The placement of temporary concrete barrier (Type K) and pavement delineation for the T4 Line is included in the lump sum price provided under this change order.

Compensation provided herein includes all additional traffic control costs required for the construction of the ED1 Line, EDR1 Line and the T4 Line during Stage 1 and 2 of the stage construction plans provided under this change order. Traffic control costs required for Stage 3 construction to be performed during the full closure of the mainline freeway shall be compensated under Change Order No. 186.

The revised contour grading specified under this change order shall be paid under Contract Bid Item No. 55 "Finishing Roadway". No additional compensation shall be paid for this work.

Furnishing and placing any changeable message signs required for the work of this change order shall be paid separately.

Total Cost of Extra Work at Lump Sum $787,170.00

This change order provides for a maximum of 925 tonnes of asphalt concrete to be furnished for the construction of the ED1 Line, the EDR1 Line, the WDR1 Line and the T4 Line. The Contractor shall be compensated $159.00 per tonne for any quantity of asphalt concrete furnished above 925 tonnes. Any compensation owed shall be paid through a supplemental change order.

The drainage plans shown on Sheets No. 12 and 13 of this change order shall supersede Sheets No. 2 and 3 issued under Change Order No. 117. Construction of this drainage system is included in the lump sum compensation provided under this change order and no additional work shall be performed under Change Order No. 117 pertaining to this work.

Estimated Cost: Increase ☑ Decrease ☐ **$156,436.00**

By reason of this order the time of completion will be adjusted as follows: Deferred

Submitted by

Signature	Resident Engineer	Date
	BILL CASEY	6-11-09

Approval Recommended by

Signature	Area Construction Manager	Date
Deanna Vilcheck	DEANNA VILCHECK	6/11/09

Engineer Approval by

Signature	Area Construction Manager	Date
Deanna Vilcheck	DEANNA VILCHECK	7/28/09

We the undersigned contractor, have given careful consideration to the change proposed and agree, if this proposal is approved, that we will provide all equipment, furnish the materials, except as may otherwise be noted above, and perform all services necessary for the work above specified, and will accept as full payment therefor the prices shown above.

NOTE: If you, the contractor, do not sign acceptance of this order, your attention is directed to the requirements of the specifications as to proceeding with the ordered work and filing a written protest within the time therein specified.

Contractor Acceptance by

Signature	(Print name and title)	Date
D Hanick	DANIEL E. HANICK, PRESIDENT	7/24/09

ED 1 Line			FOB		CL		FOB	
5/20/2009	HW		LF				RT	
4978.026	BC							
4985			Conform		Conform		Conform	
4995			50.686	1.000%	50.600	-1.000%	50.515	
5007.5			50.630	1.000%	50.545	-1.000%	50.459	
5010			50.619	1.000%	50.534	-1.000%	50.448	
5015			50.597	1.000%	50.512	-1.000%	50.426	
5020			50.575	1.000%	50.489	-1.000%	50.404	
5021			50.571	1.000%	50.485	-1.000%	50.400	
5025			50.614	1.000%	50.529	-1.00000%	50.443	
5030			50.669	1.000%	50.584	-1.00000%	50.498	
5035			50.724	1.000%	50.638	-1.00000%	50.553	
5040			50.779	1.000%	50.693	-1.00000%	50.608	
5045			50.833	1.000%	50.748	-1.00000%	50.662	
5050			50.888	1.000%	50.803	-1.00000%	50.717	
5055			50.943	1.000%	50.858	-1.00000%	50.772	
5060			50.998	1.000%	50.912	-1.00000%	50.827	
5068			51.000	0.000%	51.000	0.000%	51.000	
5079			51.100	0.000%	51.100	0.000%	51.100	
5089			51.150	0.000%	51.150	0.000%	51.150	
5095			51.100	0.000%	51.100	0.000%	51.100	
5102			51.050	0.000%	51.050	0.000%	51.050	
5108			51.000	0.000%	51.000	0.000%	51.000	
5114			50.950	0.000%	50.950	0.000%	50.950	
5126			50.900	0.000%	50.900	Conform	Conform	
5135			50.850	0.000%	50.850	Conform	Conform	

CONTRACT NO. 04-0120R4

CONTRACT CHANGE ORDER NO 143

SHEET 3 OF 13

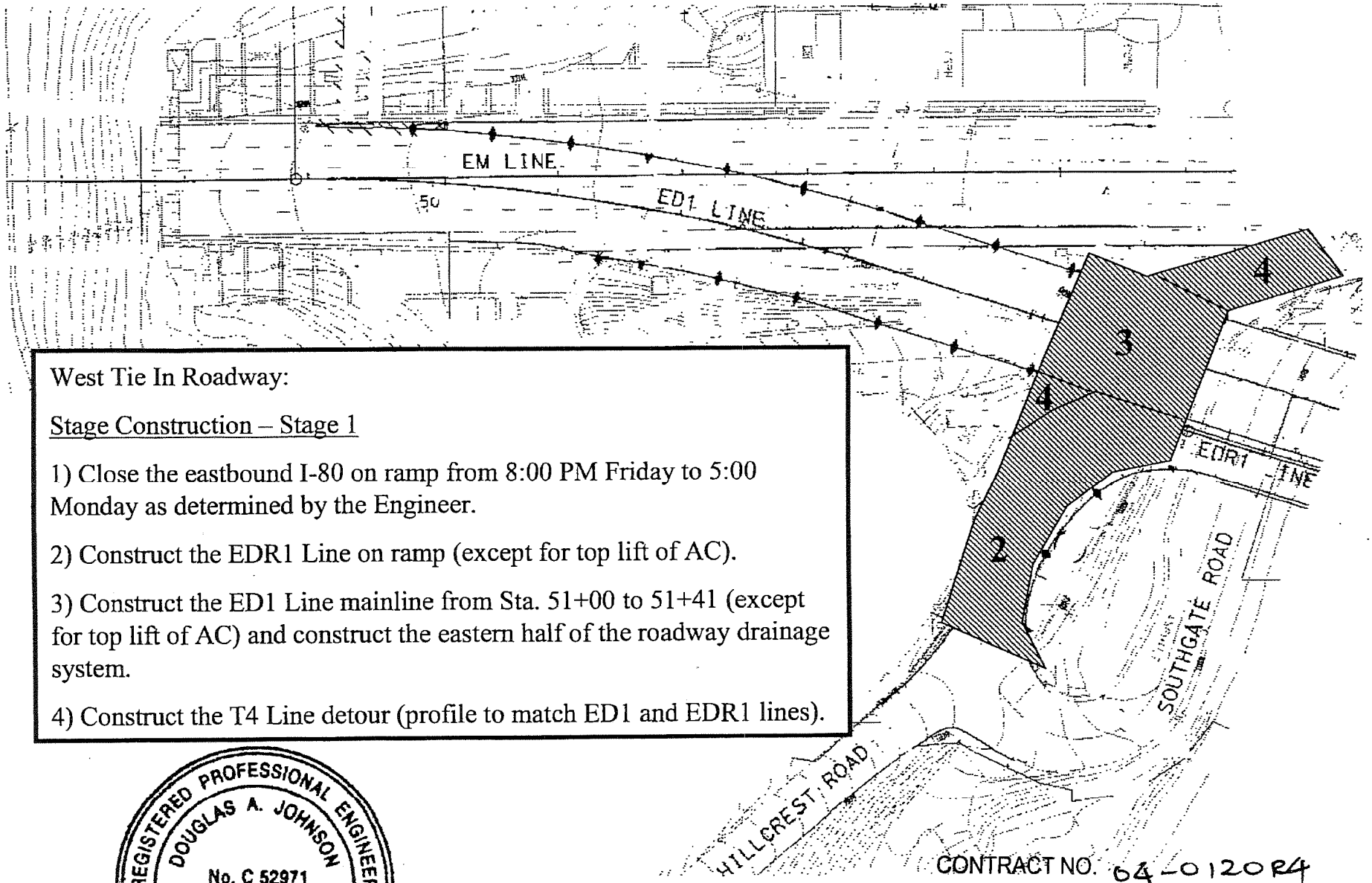

West Tie In Roadway:

Stage Construction – Stage 1

1) Close the eastbound I-80 on ramp from 8:00 PM Friday to 5:00 Monday as determined by the Engineer.

2) Construct the EDR1 Line on ramp (except for top lift of AC).

3) Construct the ED1 Line mainline from Sta. 51+00 to 51+41 (except for top lift of AC) and construct the eastern half of the roadway drainage system.

4) Construct the T4 Line detour (profile to match ED1 and EDR1 lines).

REGISTERED PROFESSIONAL ENGINEER
DOUGLAS A. JOHNSON
No. C 52971
Exp 12-31-10
CIVIL
STATE OF CALIFORNIA

CONTRACT NO. 64-0120R4

CONTRACT CHANGE ORDER NO 143

SHEET 4 OF 13

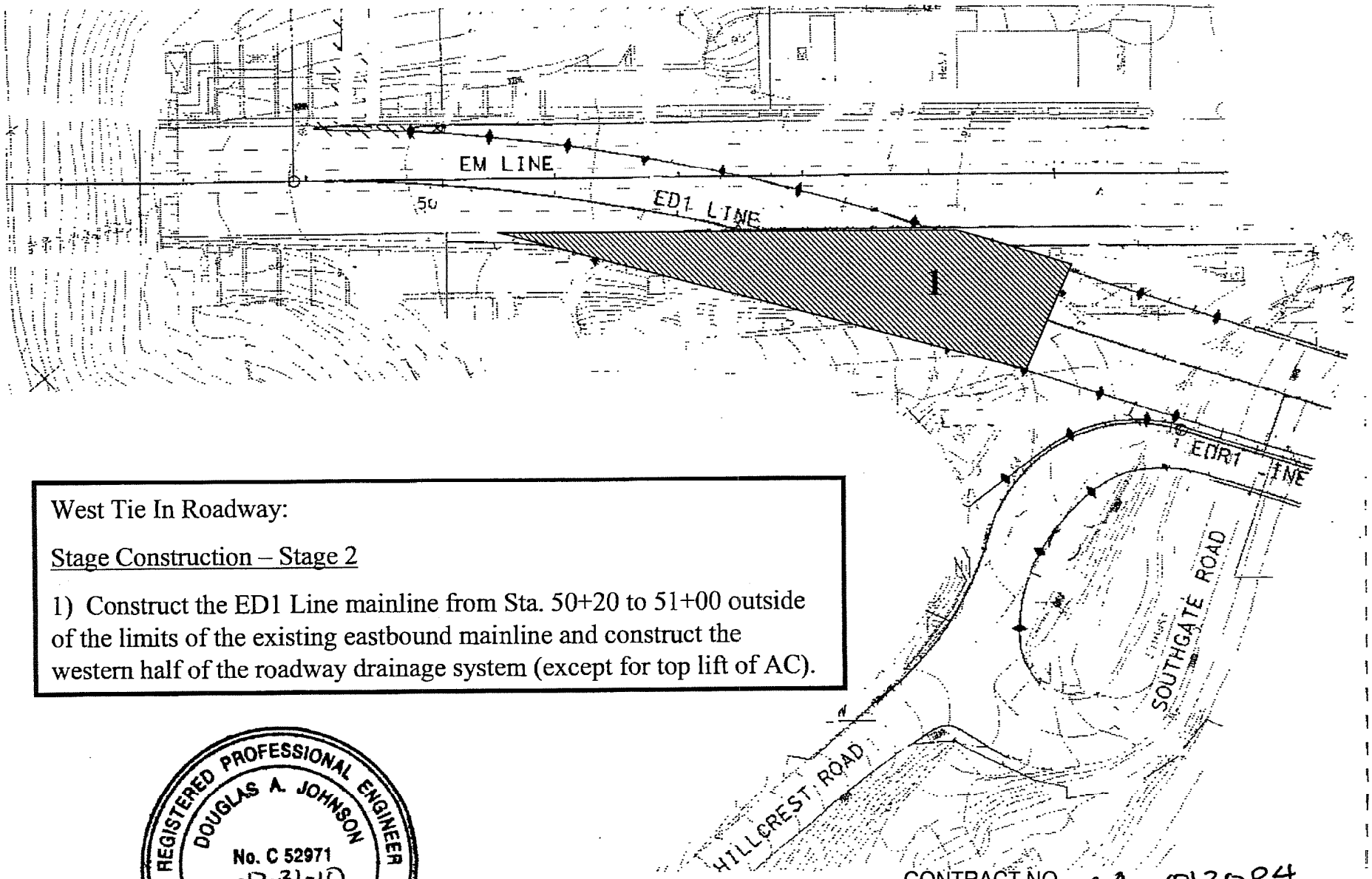

West Tie In Roadway:

Stage Construction – Stage 2

1) Construct the ED1 Line mainline from Sta. 50+20 to 51+00 outside of the limits of the existing eastbound mainline and construct the western half of the roadway drainage system (except for top lift of AC).

REGISTERED PROFESSIONAL ENGINEER
DOUGLAS A. JOHNSON
No. C 52971
Exp. 12-31-10
CIVIL
STATE OF CALIFORNIA

CONTRACT NO. 04-0120R4

CONTRACT CHANGE ORDER NO 143

SHEET 5 OF 13

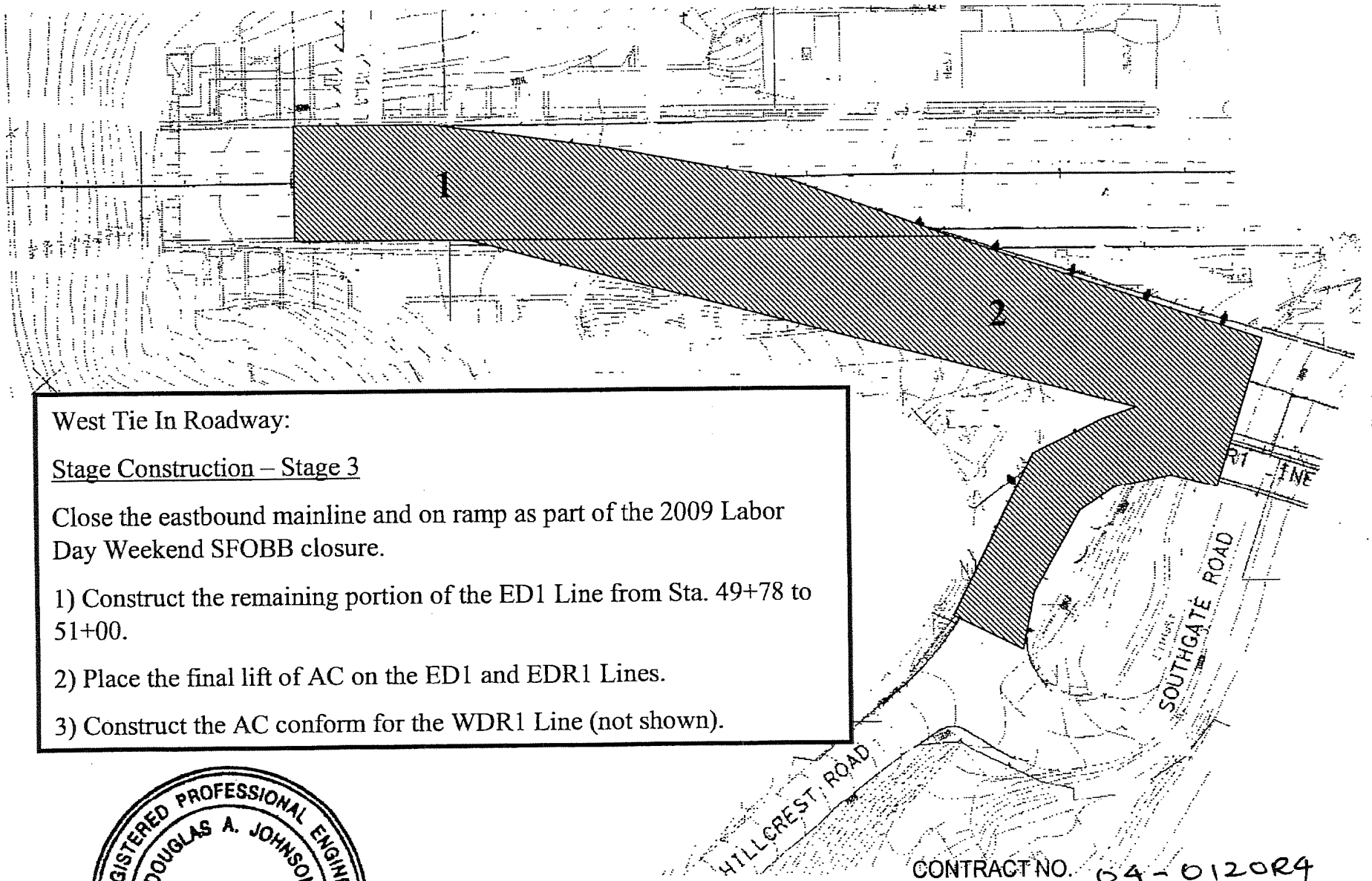

West Tie In Roadway:

Stage Construction – Stage 3

Close the eastbound mainline and on ramp as part of the 2009 Labor Day Weekend SFOBB closure.

1) Construct the remaining portion of the ED1 Line from Sta. 49+78 to 51+00.

2) Place the final lift of AC on the ED1 and EDR1 Lines.

3) Construct the AC conform for the WDR1 Line (not shown).

REGISTERED PROFESSIONAL ENGINEER
DOUGLAS A. JOHNSON
No. C 52971
Exp. 12-31-16
CIVIL
STATE OF CALIFORNIA

CONTRACT NO. 04-0120R4

CONTRACT CHANGE ORDER NO 143

SHEET 6 OF 13

DIST	COUNTY	ROUTE	KILOMETER POST TOTAL PROJECT	SHEET No.	TOTAL SHEETS
04	SF	80	12.6/13.2	4	45

REGISTERED CIVIL ENGINEER 3/5/08

PLANS APPROVAL DATE

PB AMERICAS INC.
303 Second St., Suite 700N
San Francisco, CA 94107-1317

The State of California or its officers or agents shall not be responsible for the accuracy or completeness of electronic copies of this item sheet.

Caltrans now has a web site! To get to the web site, go to: http://www.dot.ca.gov

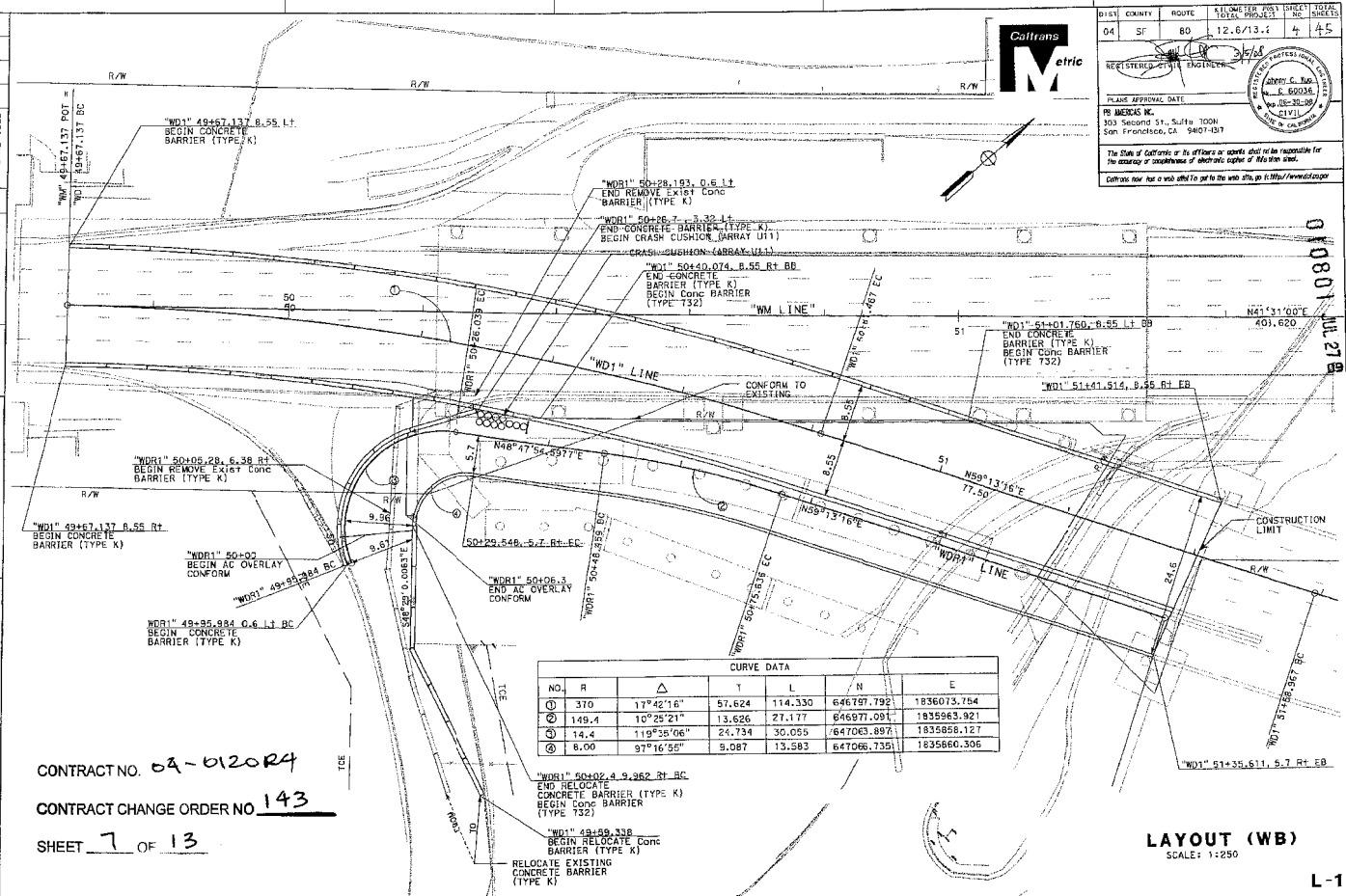

CURVE DATA						
NO.	R	Δ	T	L	N	E
①	370	17°42'16"	57.624	114.330	646797.792	1836073.754
②	149.4	10°25'21"	13.626	27.177	646977.091	1835963.921
③	14.4	119°35'06"	24.734	30.055	647063.897	1835858.127
④	8.00	97°16'55"	9.087	13.583	647066.735	1835860.306

CONTRACT NO. 04-0120R4

CONTRACT CHANGE ORDER NO. 143

SHEET 7 OF 13

LAYOUT (WB)

SCALE: 1:250

L-1

STATE OF CALIFORNIA - DEPARTMENT OF TRANSPORTATION

Caltrans

DESIGN OVERSIGHT: C. Hong Wong

CALCULATED/DESIGNED BY | CHECKED BY | DATE | REVISED BY | DATE REVISED

RELATIVE BORDER SCALE IS IN MILLIMETERS 0 20 40 60 80

DGN FILE => ea001_v8.dgn USERNAME => s128303

CU 04251 | EA 0120R1

DATE PLOTTED => 04-MAR-2008 TIME PLOTTED => 15:30

LAST REVISION 00-00-00

RECEIVED 010801 JUL 27 08

CONTRACT NO. 04-0120R4

CONTRACT CHANGE ORDER NO 143

SHEET 8 OF 13

DIST	COUNTY	ROUTE	KILOMETER POST TOTAL PROJECT	SHEET NO	TOTAL SHEETS
04	SF	80	12.6/13.2		

REGISTERED CIVIL ENGINEER

PLANS APPROVAL DATE

PB AMERICAS INC.
303 Second St., Suite 700N
San Francisco, CA 94107-1317

The State of California or its officers or agents shall not be responsible for the accuracy or completeness of electronic copies of this plan sheet.

Caltrans now has a web site! To get to the web site, go to http://www.dot.ca.gov

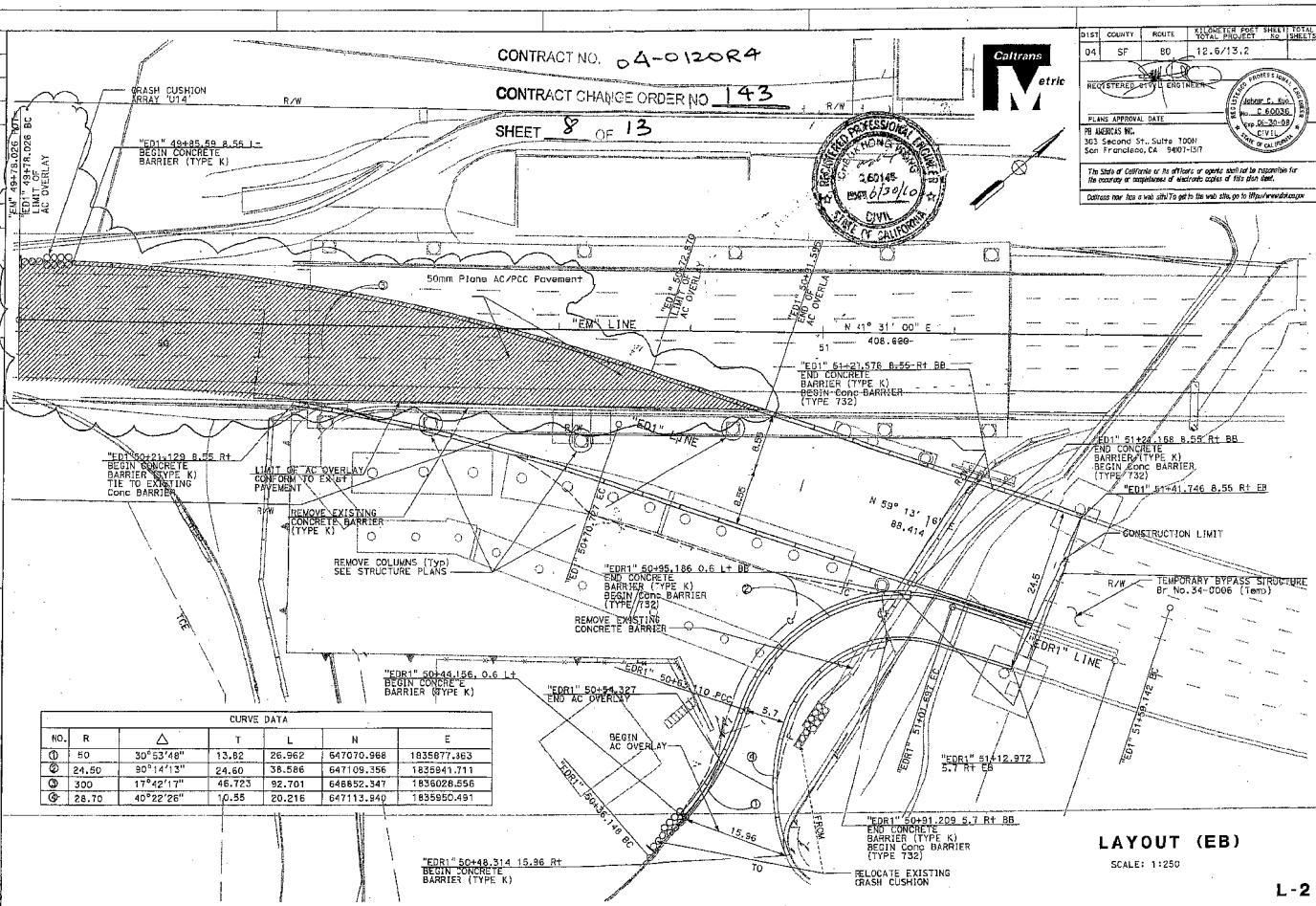

CURVE DATA

NO.	R	△	T	L	N	E
①	50	30°53'48"	13.82	26.962	647070.968	1835877.363
②	24.50	90°14'13"	24.60	38.586	647109.356	1835941.711
③	300	17°42'17"	46.723	92.701	646852.347	1836028.556
④	28.70	40°22'26"	10.55	20.216	647113.940	1835950.491

LAYOUT (EB)

SCALE: 1:250

L-2

STATE OF CALIFORNIA - DEPARTMENT OF TRANSPORTATION

Caltrans

DESIGN OVERSIGHT: C. Hong Wong

CALCULATED/DESIGNED BY | CHECKED BY | REVISED BY | DATE REVISED

RELATIVE BORDER SCALE IS IN MILLIMETERS 0 20 40 60 80

DGN FILE =>ec002_rev1.dgn
USERNAME =>e129303

CU 04251 | EA 0120R1

LAY PROJECT DATE PLOTTED => 19-MAY-2009
00-00-00 TIME PLOTTED => 19:49

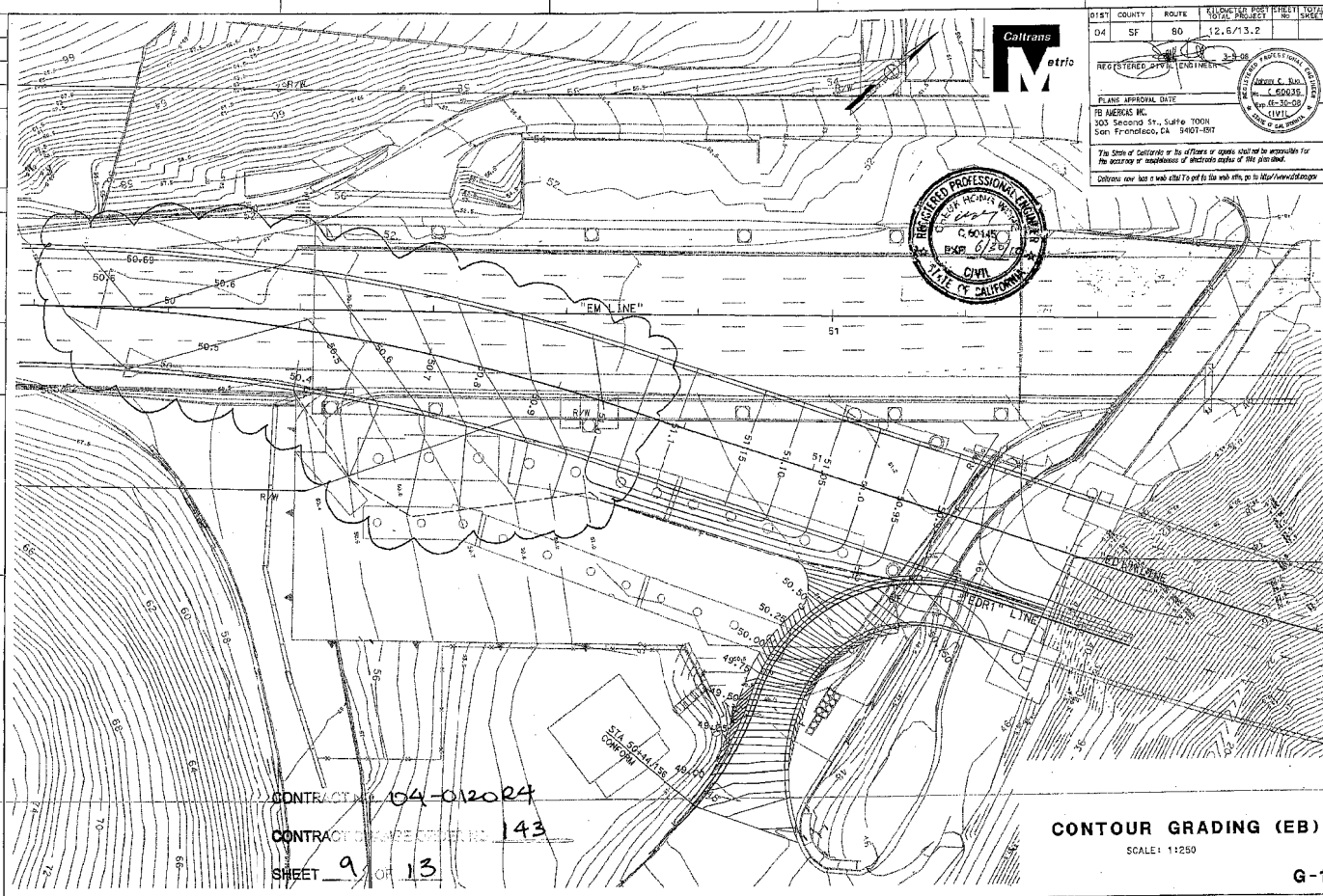

DIST	COUNTY	ROUTE	KILOMETER POST TOTAL PROJECT	SHEET No	TOTAL SHEETS
04	SF	80	12.6/13.2		

Caltrans Metric

REGISTERED CIVIL ENGINEER 3-9-06

PLANS APPROVAL DATE

FB AMERICAS INC.
303 Second St., Suite 700N
San Francisco, CA 94107-1317

REGISTERED PROFESSIONAL ENGINEER
Johnny C. Hoo
No. C 60036
Exp. 6-30-08
CIVIL
STATE OF CALIFORNIA

The State of California or its officers or agents shall not be responsible for the accuracy or completeness of electronic copies of this plan sheet.

Caltrans now has a web site! To get to the web site, go to http://www.dot.ca.gov

REGISTERED PROFESSIONAL ENGINEER
C 60145
EXP. 6/30/08
CIVIL
STATE OF CALIFORNIA

CONTRACT NO. 04-0120R4
CONTRACT CHANGE ORDER NO. 143
SHEET 9 OF 13

CONTOUR GRADING (EB)

SCALE: 1:250

G-1

STATE OF CALIFORNIA - DEPARTMENT OF TRANSPORTATION	DESIGN OVERSIGHT	CALCULATED/DESIGNED BY	DATE	REVISED BY
Caltrans	C. Hong Wong	CHECKED BY		DATE REVISED

RELATIVE BORDER SCALE IS IN MILLIMETERS 0 20 40 60 80

DGN FILE => hw001_rev1.dgn
USERNAME => s129303

CU 04251 | EA 0120R1

LAST REVISION 00-00-00 | DATE PLOTTED => 19-MAY-2009 | TIME PLOTTED => 21:23

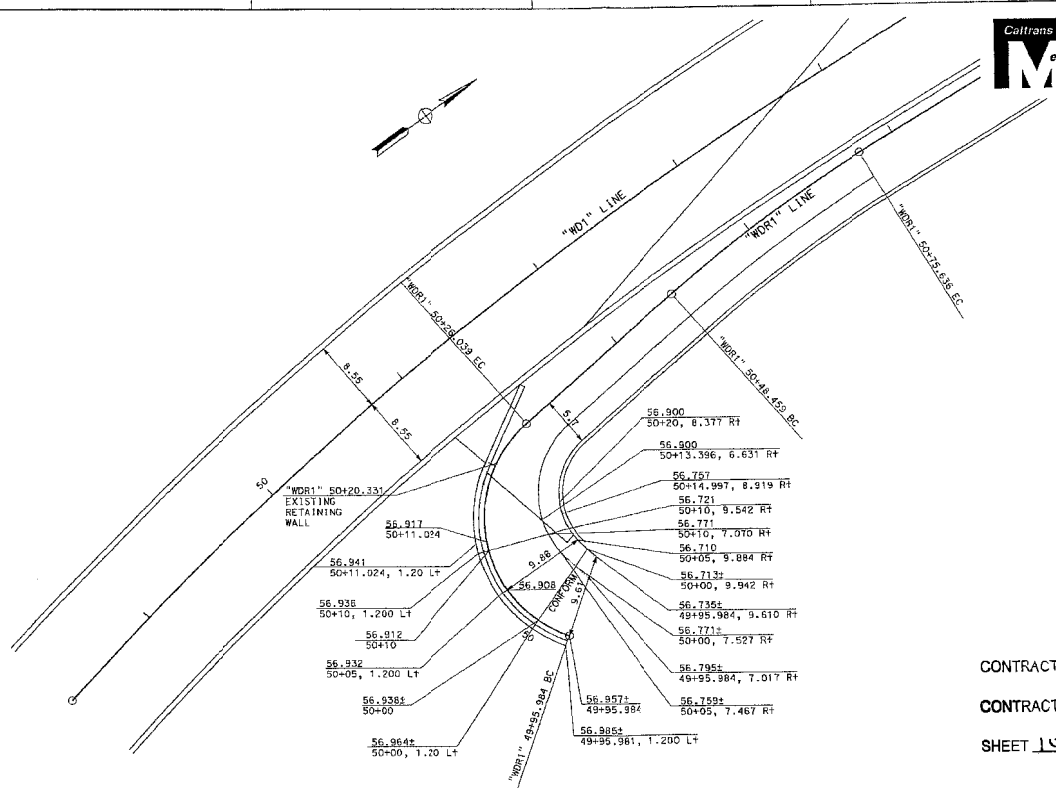

DIST	COUNTY	ROUTE	KILOMETER POST TOTAL PROJECT	SHEET NO	TOTAL SHEETS
04	SF	80	12.6/13.2	6	45

REGISTERED CIVIL ENGINEER — 3/6/08

PLANS APPROVAL DATE

PB AMERICAS INC.
303 Second St., Suite 700N
San Francisco, CA 94107-1317

Agency C. Kuo
No. C 60036
06-30-08
CIVIL
STATE OF CALIFORNIA
REGISTERED PROFESSIONAL ENGINEER

The State of California or its officers or agents shall not be responsible for the accuracy or completeness of electronic copies of this set sheet.

Caltrans now has a web site! To get to the web site, go to http://www.dot.ca.gov

CONTRACT NO. 04-0120R4

CONTRACT CHANGE ORDER NO. 143

SHEET 10 OF 13

CONSTRUCTION DETAIL

SCALE: 1:200

C-1

STATE OF CALIFORNIA - DEPARTMENT OF TRANSPORTATION
Caltrans

DESIGN OVERSIGHT: C. Hong Wong
CALCULATED/DESIGNED BY
CHECKED BY

DATE	REVISED BY	DATE REVISED

RELATIVE BORDER SCALE IS IN MILLIMETERS — 0 20 40 60 80

DGN FILE => gs001.dgn
USERNAME => s129303

CU 04251 | EA 0120R1

LAST REVISION — DATE PLOTTED => 14-MAR-2008
00-00-00 — TIME PLOTTED => 13:40

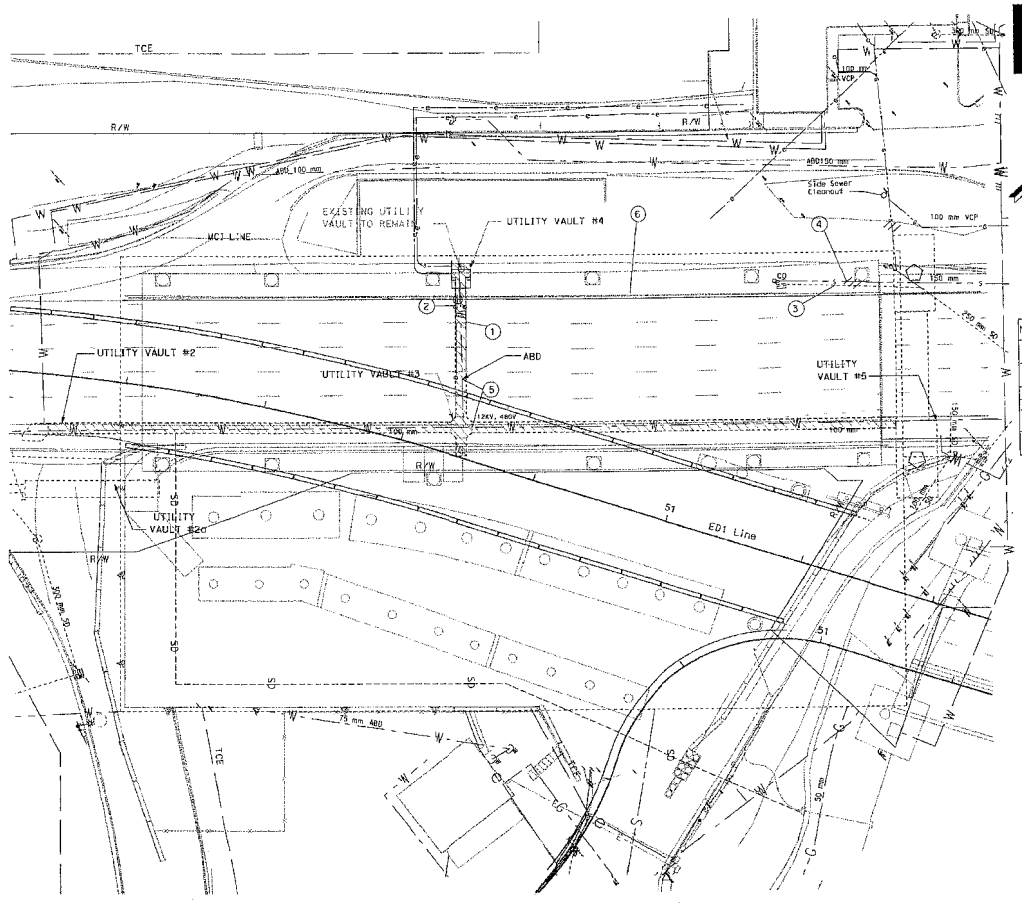

DIST	COUNTY	ROUTE	KILOMETER POST TOTAL PROJECT	SHEET NO	TOTAL SHEETS
04	SF	80	12.6/13.2	8	45

REGISTERED CIVIL ENGINEER 3/6/08

PLANS APPROVAL DATE

PB AMERICAS, INC.
303 Second St., Suite 700N
San Francisco, CA 94107-1317

REGISTERED PROFESSIONAL ENGINEER Johnny C. Kuo No. C 60036 Exp. 06-30-08 CIVIL STATE OF CALIFORNIA

The State of California or its officers or agents shall not be responsible for the accuracy or completeness of electronic copies of this plan sheet.

Caltrans now has a web site! To get to the web site, go to http://www.dot.ca.gov

ABANDONED UTILITY VAULT (FILLED WITH CONCRETE)

LIMIT OF VIADUCT REPLACEMENT WORK

YBI EXISTING UTILITIES

No.	Utility	Owner	Description	Location	Length (m)
1	Electrical	US Navy, USCG, or Caltrans	12KV, 480V	WM 50+70	25
2	Electrical	US Navy, USCG, or Caltrans	12KV, 480V	WM 50+70	25
3	Drainage	US Navy	150 mm SD	WM 51+30	40
4	Sewer	US Navy, USCG	150 mm VCP	WM 5[illegible]+40	20
5	Water	US Navy, Caltrans	100 mm	WM 50+70	130
6	Fiber Optics	MCI	ABD	WM Line	110

CONTRACT NO. 04-0120R4

CONTRACT CHANGE ORDER NO 143

SHEET 11 OF 13

UTILITY PLAN

SCALE: 1:250

U-1

STATE OF CALIFORNIA - DEPARTMENT OF TRANSPORTATION

Caltrans

DESIGN OVERSIGHT: C. Hang Wong

CALCULATED/DESIGNED BY | CHECKED BY | REVISED BY | DATE REVISED

DATE PLOTTED => 06-MAR-2008 TIME PLOTTED => 11:47

LAST REVISION 00-00-00

RELATIVE BORDER SCALE 0 20 40 60 80

DGN FILE => ka001.dgn USERNAME => s129303

CU 04251 | EA 0120R1

CONTRACT NO. 04-0120R4

CONTRACT CHANGE ORDER NO. 143

SHEET 12 OF 13

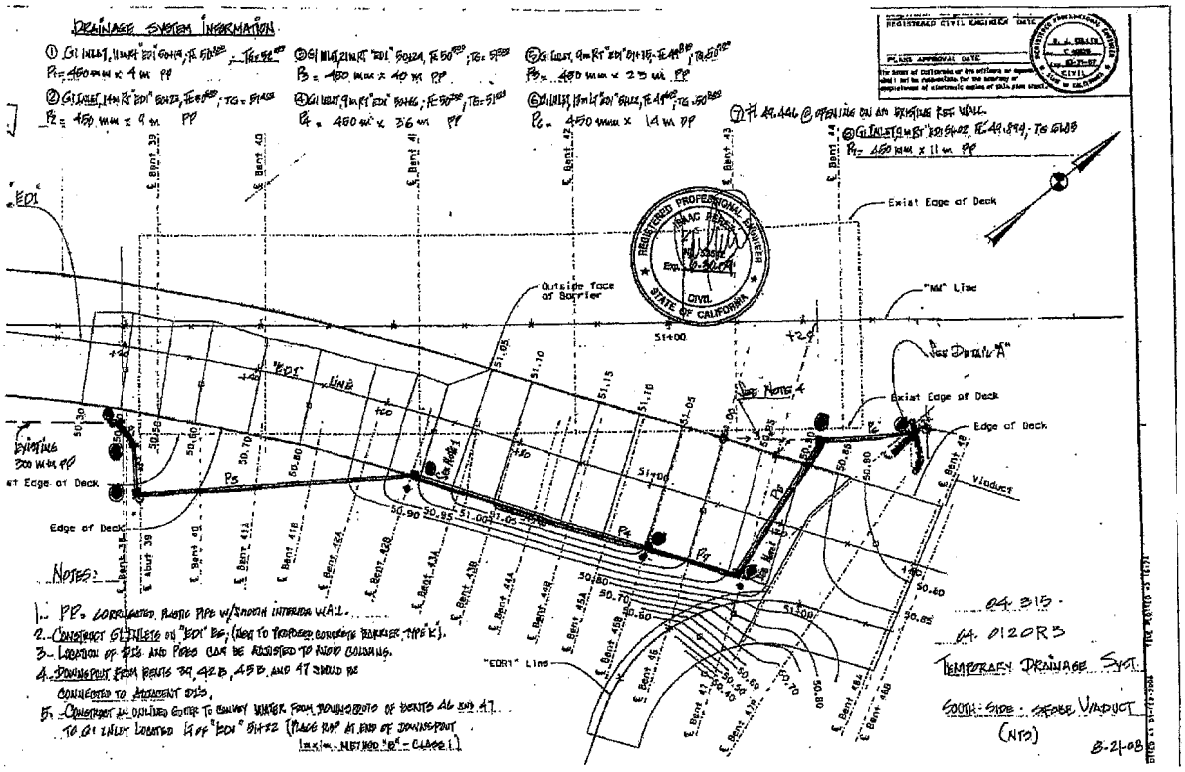

CONTRACT NO. 04-0120R4

CONTRACT CHANGE ORDER NO 143

SHEET 13 OF 13

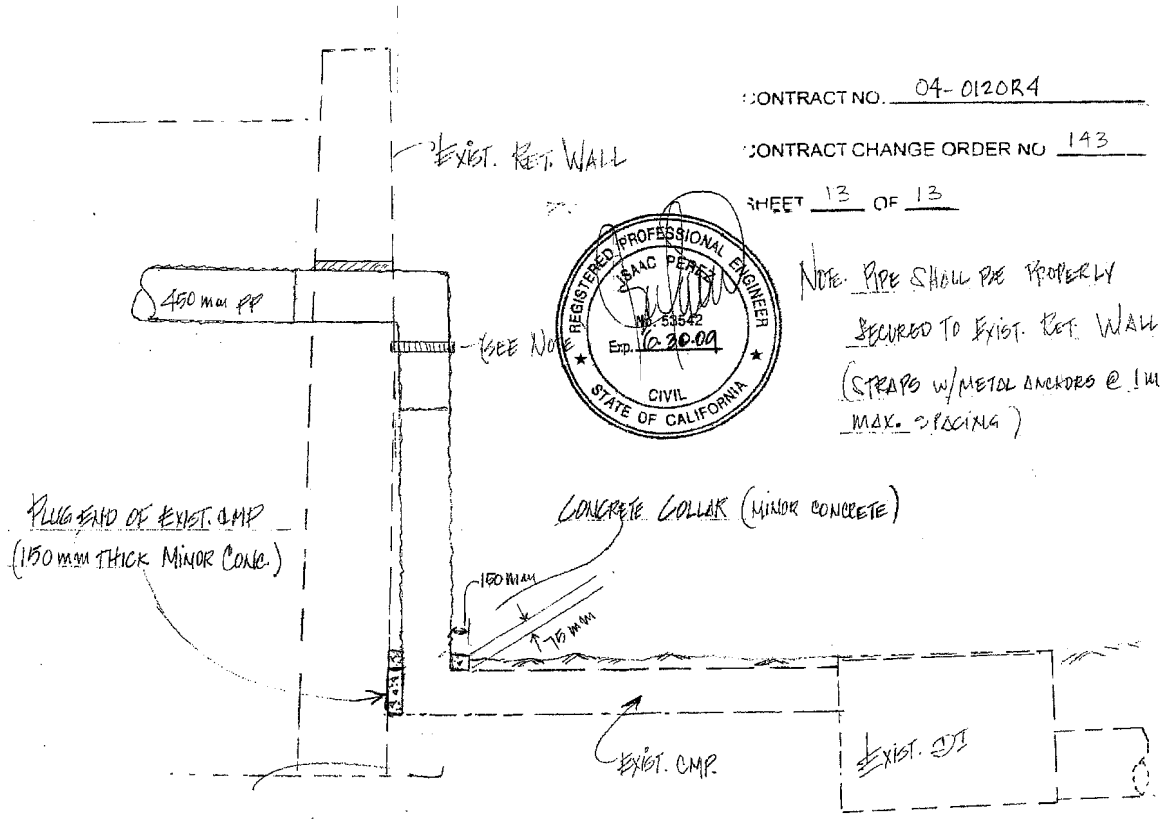

REGISTERED PROFESSIONAL ENGINEER
ISAAC PERES
No. 53542
Exp. 12-30-09
CIVIL
STATE OF CALIFORNIA

NOTE: PIPE SHALL BE PROPERLY SECURED TO EXIST. RET. WALL (STRAPS W/METAL ANCHORS @ 1M MAX. SPACING)

DETAIL "A"
(NTS)

04-345
04-0120R3
8-21-08

STATE OF CALIFORNIA - DEPARTMENT OF TRANSPORTATION

CONTRACT CHANGE ORDER MEMORANDUM

DATE: 6/2/2009 Page 1 of 2

TO: MIKE FORNER / DEANNA VILCHECK	FILE: E.A. 04 - 0120R4
	CO-RTE-PM SF-80-12.6/13.2
FROM: BILL CASEY	FED. NO. ACBRIM-080-1(097)N
CCO#: 143 SUPPLEMENT#: 0 Category Code: CXPX	CONTINGENCY BALANCE (incl. this change) $47,058,360.59
COST: $156,436.00 INCREASE ☑ DECREASE ☐	HEADQUARTERS APPROVAL REQUIRED? ☑ YES ☐ NO
SUPPLEMENTAL FUNDS PROVIDED: $0.00	IS THIS REQUEST IN ACCORDANCE WITH ENVIRONMENTAL DOCUMENTS? ☑ YES ☐ NO
CCO DESCRIPTION: WTI Phase 2 Roadway	**PROJECT DESCRIPTION:** CONSTRUCT ROUTE 80 TEMP BYPASS STRUCTURE

Original Contract Time:	Time Adj. This Change:	Previously Approved CCO Time Adjustments:	Percentage Time Adjusted: (including this change)	Total # of Unreconciled Deferred Time CCO(s): (including this change)
475 Day(s)	DEF Day(s)	1195 Day(s)	252 %	8

THIS CHANGE ORDER PROVIDES FOR:

Revisions to the construction of the eastbound roadway section of the West Tie-In.

This project, the Temporary Bypass Structure (TBS), was awarded in March 2004 to construct a detour that will allow for the tie in of the new east span of the San Francisco Oakland Bay Bridge to Yerba Buena Island. The TBS encompasses three main structures, the East Tie-In (ETI) to the existing bridge, the West Tie-In (WTI) to Yerba Buena Island and the Viaduct structure between the two tie ins.

The original contract was awarded as a performance based contract with the contractor responsible for the design of the structures based upon certain design criteria. The Department issued a December 14, 2006 memo entitled Strategy for South-South Detour Contract Completion which was approved by Tony Anziano (Toll Bridge Program Manager), Richard Land (Chief Engineer) and subsequently the TBPOC that provided for the Department to assume control of the design of the WTI structure from the contractor and to provide for the seismic replacement of the a 300 lineal foot long section of the existing westbound structure directly adjacent to the WTI structure. The construction of the revised WTI structure and the seismic replacement of the existing westbound structure has been provided for under Contract Change Orders No. 61, No. 62, No. 72, No. 76, No. 84, No. 101, No. 108, and No. 141. This change order pertains to the resulting changes to the roadway portions of the WTI and the conform to the existing roadway.

This change order provides for the elimination of portions of the original contract work pertaining to the reconstruction of the existing eastbound mainline roadway and an asphalt concrete overlay on the existing westbound roadway. This work is no longer necessary due to the changes to the WTI outlined above.

This change order also provides for revisions to the construction of the WTI eastbound mainline roadway and the eastbound on ramp from Yerba Buena Island. The changes include a revised profile for the mainline roadway and revisions to the conforms for both the mainline and on ramp roadway. Revised stage construction plans are also provided that allow for the new roadway to be constructed without closing the existing on ramp and provides for the traffic switch from the existing mainline to the WTI structure.

Due to the extent of the changes to the WTI roadway and the 5 year delay that has been incurred on the project, the original contract bid items shall be eliminated and an agreed lump sum price shall be paid for the work.

This change order also provides for the construction of a drainage system incorporating 7 inlets and approximately 140 meters of culvert. This work was originally specified to be performed under Change Order No. 117 at force account. However, those plans did not account for the system having to be constructed during a full closure of the eastbound on ramp. This work is now specified under this change order to take place during the same weekend ramp closure that will allow for the new on ramp and the western portion of the new mainline freeway to be constructed. As it would be extremely difficult to segregate the construction of the roadway and drainage system, this change order includes the construction of the drainage system as part of the lump sum price paid. Accordingly, payment of the work specified under Change Order No. 117 is eliminated by this change order.

ADA Notice: For individuals with sensory disabilities, this document is available in alternate formats. For information call: (916) 654-6410 or TDD (916) 654-3880 or write Records and Forms Management, 1120 N Street, MS-89, Sacramento, CA 95814.

The elimination of the contract bid items for both the existing mainline and new WTI roadway shall result in an estimated credit to the Department of $630,734.00. Compensation for constructing the revised WTI roadway and drainage system shall be paid as extra work at an agreed lump sum price of $787,170.00. The net estimated change order cost of $156,436.00 shall be financed from the contract's contingency funds. A cost analysis is on file.

The change order also includes a potential adjustment of compensation for any overrun of asphalt concrete. Any adjustment shall be paid through a supplemental change order.

Adjustment of contract time is deferred as the work may affect the controlling operation.

This change was concurred by Alec Melkonians - Asst. Project Manager, Hong Wong - Project Engineer, and Lina Ellis - CT Maintenance.

RECEIVED
09 OCT -8 AM 10:04

CONCURRED BY:		
Construction Engineer:	Bill Casey, Resident Engineer	Date 6-11-09
Bridge Engineer:		Date
Project Engineer:	Hong Wong, PE	Date 6/5/09
Project Manager:	Alec Melkonians	Date 6/4/09
FHWA Rep.:		Date
Environmental:		Date
Other (specify):	Lina Ellis, Maintenance	Date 6/9/09
Other (specify):		Date
District Prior Approval By:		Date
HQ (Issue Approve) By:	Bob Molera, HQ CCO Engineer	Date 6/11/09
Resident Engineer's Signature:		Date
		6-11-09

ESTIMATE OF COST

	THIS REQUEST	TOTAL TO DATE
ITEMS	($630,734.00)	($630,734.00)
FORCE ACCOUNT	$0.00	$0.00
AGREED PRICE	$787,170.00	$787,170.00
ADJUSTMENT	$0.00	$0.00
TOTAL	$156,436.00	$156,436.00

FEDERAL PARTICIPATION

☐ PARTICIPATING ☐ PARTICIPATING IN PART ☑ NONE
☐ NON-PARTICIPATING (MAINTENANCE) ☐ NON-PARTICIPATING

FEDERAL SEGREGATION (if more than one Funding Source or P.I.P. type)
☐ CCO FUNDED PER CONTRACT ☐ CCO FUNDED AS FOLLOWS

FEDERAL FUNDING SOURCE	PERCENT

ADA Notice: For individuals with sensory disabilities, this document is available in alternate formats. For information call: (916) 654-6410 or TDD (916) 654-3880 or write Records and Forms Management, 1120 N Street, MS-89, Sacramento, CA 95814.

STATE OF CALIFORNIA - DEPARTMENT OF TRANSPORTATION

CONTRACT CHANGE ORDER

Change Requested by: Engineer

CCO 143	Suppl. No. 1	Contract No. 04 - 0120R4	Road SF-80-12.6/13.2	FED. AID LOC.:

To: CC MYERS INC

You are directed to make the following changes from the plans and specifications or do the following described work not included in the plans and specifications for this contract. ***NOTE: This change order is not effective until approved by the Engineer.***

Description of work to be done, estimate of quantities and prices to be paid. (Segregate between additional work at contract price, agreed price and force account.) Unless otherwise stated, rates for rental of equipment cover only such time as equipment is actually used and no allowance will be made for idle time. This last percentage shown is the net accumulated increase or decrease from the original quantity in the Engineer's Estimate.

Adjustment of Compensation at Lump Sum:

In accordance with the provisions of the original Contract Change Order No. 143, provide compensation to the Contractor for the quantity of asphalt concrete furnished for the work that overran the 925 tonnes specified under the original Contract Change Order No. 143.

For this work, the Contractor shall be compensated an agreed lump sum of $62,248.50. This lump sum constitutes full anc final compensation, including all markups, for the additional asphalt concrete placed.

Total Cost of Adjustment of Compensation at Lump Sum $62,248.50

RECEIVED
011672 APR 13 10

Estimated Cost: Increase ☑ Decrease ☐ $62,248.50

By reason of this order the time of completion will be adjusted as follows: 0 days

Submitted by

Signature	Resident Engineer	Date
[signature]	BILL CASEY	12-11-09

Approval Recommended by

Signature	Area Construction Manager	Date
Deanna Vilcheck	DEANNA VILCHECK	12/14/09

Engineer Approval by

Signature	Area Construction Manager	Date
Deanna Vilcheck	DEANNA VILCHECK	2/3/10

We the undersigned contractor, have given careful consideration to the change proposed and agree, if this proposal is approved, that we will provide all equipment, furnish the materials, except as may otherwise be noted above, and perform all services necessary for the work above specified, and will accept as full payment therefor the prices shown above.

NOTE: If you, the contractor, do not sign acceptance of this order, your attention is directed to the requirements of the specifications as to proceeding with the ordered work and filing a written protest within the time therein specified.

Contractor Acceptance by

Signature	(Print name and title)	Date
[signature]	STEVE FRANCIS, CHIEF ESTIMATOR	1.25.10

STATE OF CALIFORNIA - DEPARTMENT OF TRANSPORTATION

CONTRACT CHANGE ORDER MEMORANDUM

DATE: 12/8/2009 Page 1 of 1

TO: MIKE FORNER / DEANNA VILCHECK	FILE: E.A. 04 - 0120R4
	CO-RTE-PM SF-80-12.6/13.2
FROM: BILL CASEY	FED. NO.
CCO#: 143 SUPPLEMENT#: 1 Category Code: CXPX	CONTINGENCY BALANCE (incl. this change) $44,216,726.59
COST: $62,248.50 INCREASE ☑ DECREASE ☐	HEADQUARTERS APPROVAL REQUIRED? ☑ YES ☐ NO
SUPPLEMENTAL FUNDS PROVIDED: $0.00	IS THIS REQUEST IN ACCORDANCE WITH ENVIRONMENTAL DOCUMENTS? ☑ YES ☐ NO
CCO DESCRIPTION: WTI Roadway AC Overrun	**PROJECT DESCRIPTION:** CONSTRUCT ROUTE 80 TEMP BYPASS STRUCTURE

Original Contract Time:	Time Adj. This Change:	Previously Approved CCO Time Adjustments:	Percentage Time Adjusted: (including this change)	Total # of Unreconciled Deferred Time CCO(s): (including this change)
475 Day(s)	0 Day(s)	1600 Day(s)	337 %	0

THIS CHANGE ORDER PROVIDES FOR:

Compensation to the contractor for the overrun of the quantity of asphalt concrete placed under the original Change Order No. 143.

This project provides form the construction of a detour that will allow for the tie in of the new east span of the San Francisco Oakland Bay Bridge to Yerba Buena Island. The detour encompasses three main structures, the East Tie-In (ETI) to the existing bridge, the West Tie-In (WTI) to Yerba Buena Island and the Viaduct structure between the two tie ins.

The original Change Order No. 143 provided for the construction of the asphalt concrete roadway for the eastbound mainline and on ramp and the westbound off ramp of the West Tie In structure. That change order specified that any asphalt concrete furnished, beyond the 925 tonnes estimated for that change, would be paid at an established price of $159.00 per tonne. The final quantity of asphalt furnished under this change totaled to 1,316.50 tonnes. Most of the additional tonnage was the result of having to extend the on ramp shoulders and the western mainline conform to match existing field conditions. This change order provides for the additional compensation that results from the 391.50 tonne overrun of the estimated 925 tonnes.

Compensation shall be paid as adjustment of compensation at an agreed lump sum price of $62,248.50. which shall be financed from the contract's contingency funds. A cost analysis is on file.

No adjustment of contract time is warranted as the work will not affect the controlling operation.

This change was concurred with by Alec Melkonians - Asst. Project Manager and Minh B. Nguyen - Project Engineer.

Maintenance concurrence is not required as this change doesn't affect any permanent roadway features.

CONCURRED BY:		
Construction Engineer:	Bill Casey, Resident Engineer	Date 12-11-09
Bridge Engineer:		Date
Project Engineer:	Minh B. Nguyen, PE	Date 12-8-09
Project Manager:	Alec Melkonians	Date 12-8-09
FHWA Rep.:		Date
Environmental:		Date
Other (specify):		Date
Other (specify):		Date
District Prior Approval By:		Date
HQ (Issue Approve) By:	Bob Molera, HQ CCO Engineer	Date 12/17/09
Resident Engineer's Signature:		Date
12-11-09		

ESTIMATE OF COST

	THIS REQUEST	TOTAL TO DATE
ITEMS	$0.00	($630,734.00)
FORCE ACCOUNT	$0.00	$0.00
AGREED PRICE	$0.00	$787,170.00
ADJUSTMENT	$62,248.50	$62,248.50
TOTAL	$62,248.50	$218,684.50

FEDERAL PARTICIPATION

☐ PARTICIPATING ☐ PARTICIPATING IN PART ☑ NONE
☐ NON-PARTICIPATING (MAINTENANCE) ☐ NON-PARTICIPATING

FEDERAL SEGREGATION (if more than one Funding Source or P.I.P. type)
☐ CCO FUNDED PER CONTRACT ☐ CCO FUNDED AS FOLLOWS

FEDERAL FUNDING SOURCE	PERCENT

ADA Notice: For individuals with sensory disabilities, this document is available in alternate formats. For information call: (916) 654-6410 or TDD (916) 654-3880 or write Records and Forms Management, 1120 N Street, MS-89, Sacramento, CA 95814.

CONTRACT CHANGE ORDER

Change Requested by: Engineer

CCO 144	Suppl. No. 0	Contract No. 04 - 0120R4	Road SF-80-12.6/13.2	FED. AID LOC.: ACBRIM-080-1(097)N

To: CC MYERS INC

You are directed to make the following changes from the plans and specifications or do the following described work not included in the plans and specifications for this contract. ***NOTE: This change order is not effective until approved by the Engineer.***

Description of work to be done, estimate of quantities and prices to be paid. (Segregate between additional work at contract price, agreed price and force account.) Unless otherwise stated, rates for rental of equipment cover only such time as equipment is actually used and no allowance will be made for idle time. This last percentage shown is the net accumulated increase or decrease from the original quantity in the Engineer's Estimate.

Extra Work at Force Account:

Perform the following work concerning the construction of the East Tie-In expansion joints of this change order:

1) Procure all material for the deck panels, masonry plate and bearing plate for the Bent 52A and Pier E1 expansion joints in accordance with Sheets No. 9 through 30 and as authorized by the Engineer.

2) Provide all labor, equipment and materials to construct the expansion joint mock up as shown on Pages No. 2 through 8 of this change order and as authorized by the Engineer .

The plan sheets and specifications provided under this change order (Sheets 9 through 16) shall be used solely for the procurement of materials and construction of the expansion joint mock up as determined by the Engineer. Final plans and specifications shall be issued under a separate change order providing for the final fabrication and installation of the expansion joints.

Any salvage value or disposal costs associated with the materials procured under this change order are deferred.

Compensation for delays resulting from this work will be made in accordance with Section 8-1.09 "Right of Way Delays" of the Standard Specifications and Section 10-1.20 "Time Related Overhead" of the Special Provisions.

Consideration of a time adjustment will be deferred until completion of the work specified herein. Determination of a commensurate time extension will be made in accordance with Section 8-1.07, "Liquidated Damages", of the Standard Specifications.

Estimated Cost of Extra Work at Force Account $850,000.00

Estimated Cost: Increase ☑ Decrease ☐ **$850,000.00**

By reason of this order the time of completion will be adjusted as follows: Deferred

Submitted by

Signature	Resident Engineer BILL CASEY	Date 8-19-08

Approval Recommended by

Signature Deanna Vilcheck	Area Construction Manager DEANNA VILCHECK	Date 8/25/08

Engineer Approval by

Signature Deanna Vilcheck	Area Construction Manager DEANNA VILCHECK	Date 9/12/08

We the undersigned contractor, have given careful consideration to the change proposed and agree, if this proposal is approved, that we will provide all equipment, furnish the materials, except as may otherwise be noted above, and perform all services necessary for the work above specified, and will accept as full payment therefor the prices shown above.

NOTE: If you, the contractor, do not sign acceptance of this order, your attention is directed to the requirements of the specifications as to proceeding with the ordered work and filing a written protest within the time therein specified.

Contractor Acceptance by

Signature	(Print name and title) DANIEL E. HANCK, PRESIDENT	Date 9/10/08

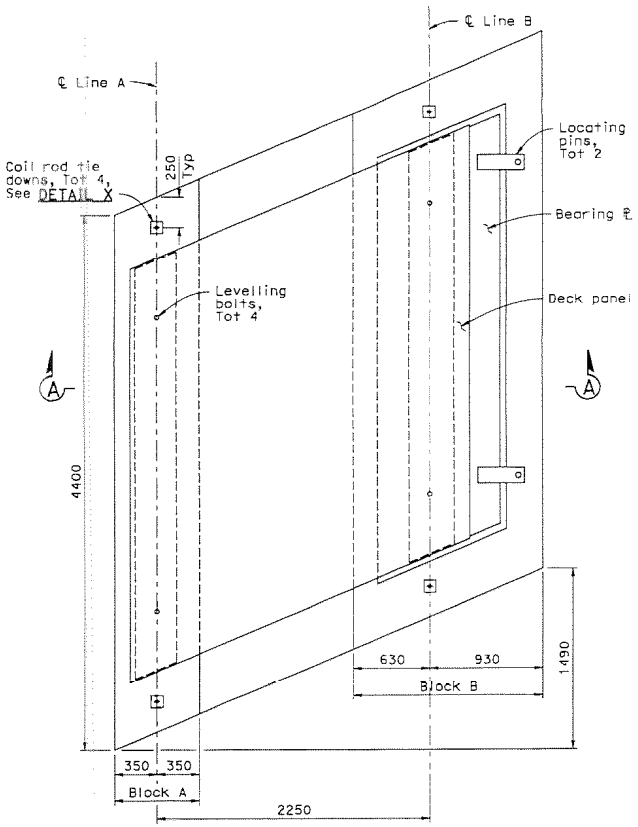

LAYOUT OF ASSEMBLED MOCK UP
1:20

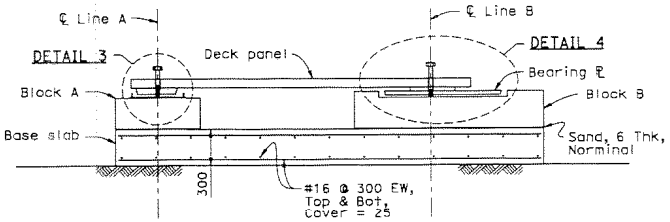

SECTION A-A
1:20

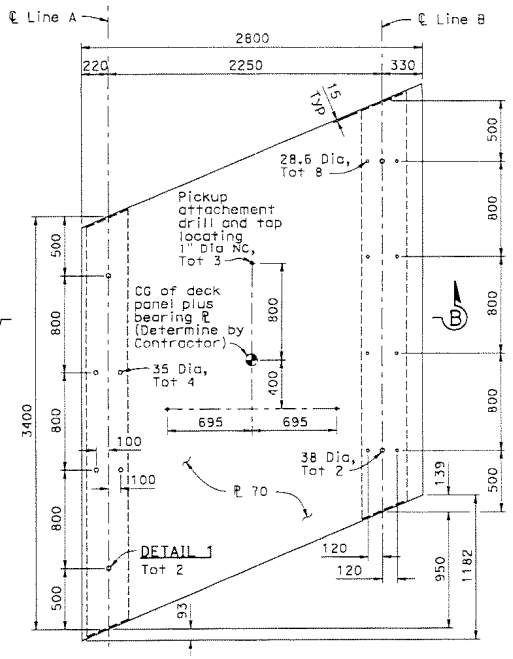

MOCK UP DECK PANEL
1:20

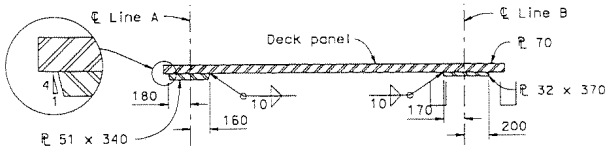

SECTION B-B
1:20

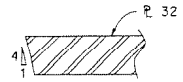

SECTION C-C
1:2
Typ edge bevel

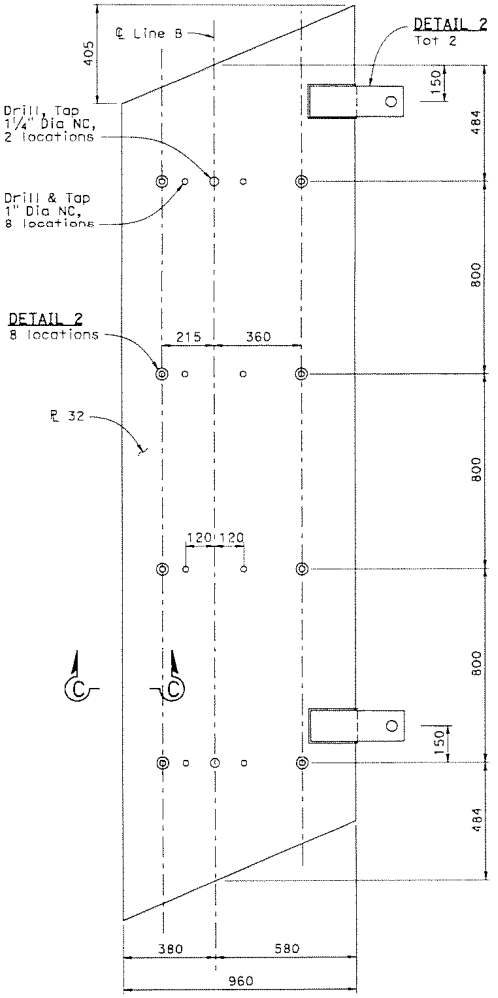

PLAN - BEARING PLATE
1:10

CONTRACT NO. 04-0120R4

CONTRACT CHANGE ORDER NO 144

SHEET 2 OF 30

SAN FRANCISCO OAKLAND BAY BRIDGE
EAST SPAN SEISMIC SAFETY PROJECT

EAST TIE-IN

EXPANSION JOINT MOCK UP DETAILS No. 1

Sketch 1/3

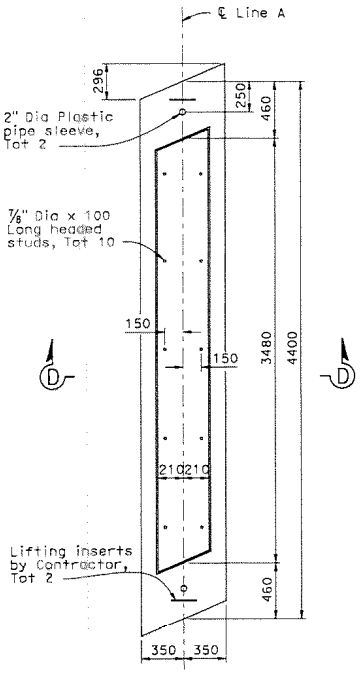

BLOCK A PLAN
1:20

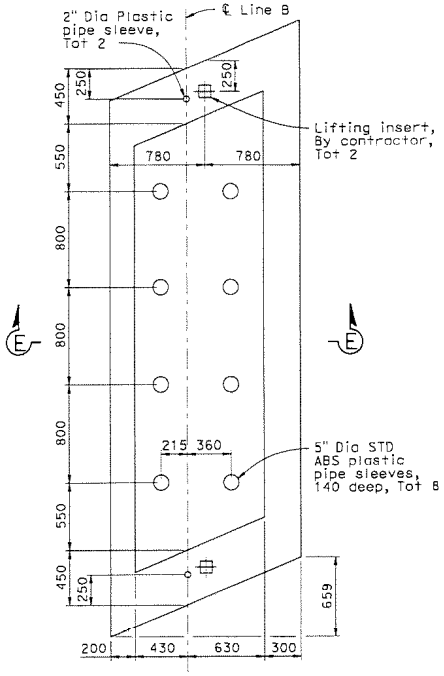

BLOCK B PLAN
1:20

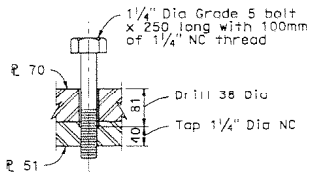

DETAIL 1
1:5

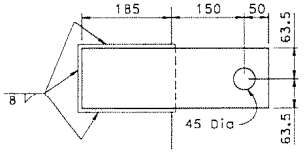

PLAN VIEW

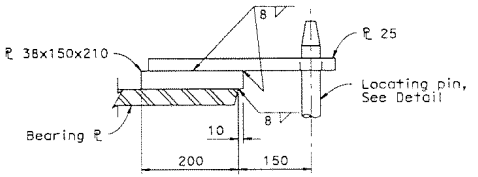

ELEVATION

DETAIL 2
1:5

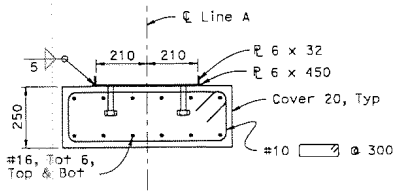

SECTION D-D
1:10

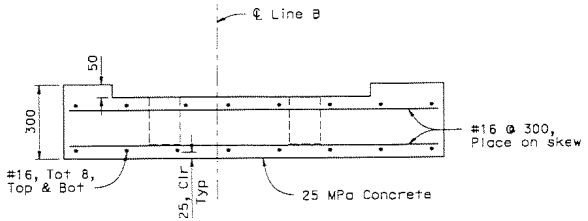

SECTION E-E
1:10

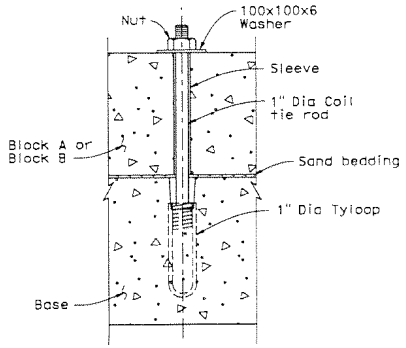

DETAIL X
1:5

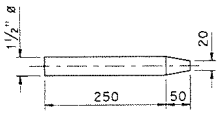

LOCATING PIN DETAIL
1:5

SAN FRANCISCO OAKLAND BAY BRIDGE
EAST SPAN SEISMIC SAFETY PROJECT

EAST TIE-IN

EXPANSION JOINT MOCK UP DETAILS No. 2

Sketch 2/3

CONTRACT NO. 04-0120R4

CONTRACT CHANGE ORDER NO 144

SHEET 3 OF 30

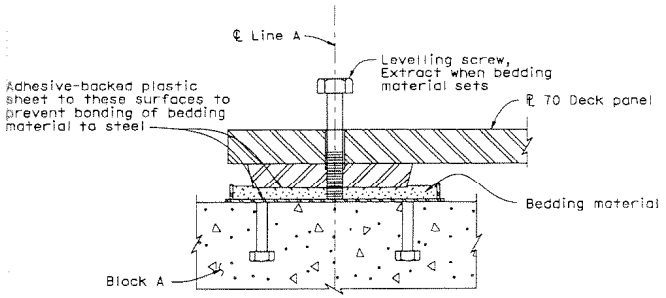

DETAIL 3
1:5

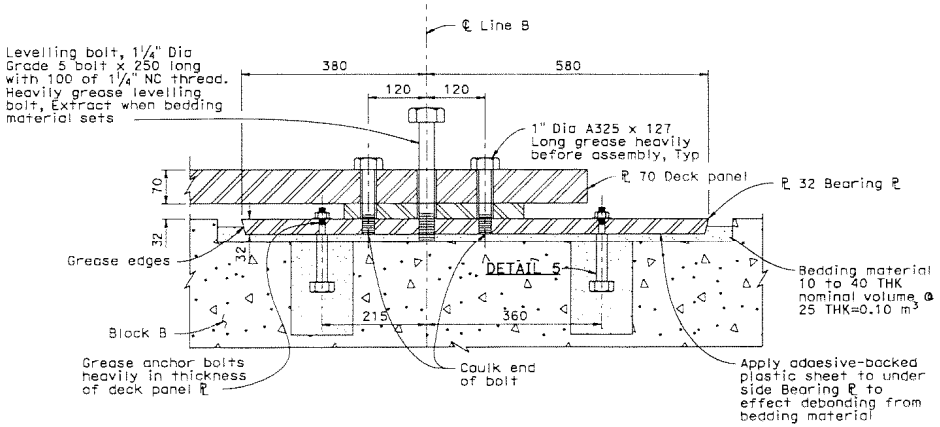

DETAIL 4
1:5

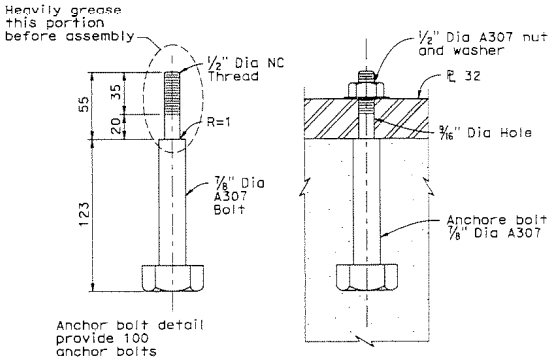

DETAIL 5
1:2

CONTRACT NO. 04-012024

CONTRACT CHANGE ORDER NO 144

SHEET 4 OF 30

SAN FRANCISCO OAKLAND BAY BRIDGE
EAST SPAN SEISMIC SAFETY PROJECT

EAST TIE-IN

EXPANSION JOINT MOCK UP DETAILS No. 3

Sketch 3/3

TEST 1

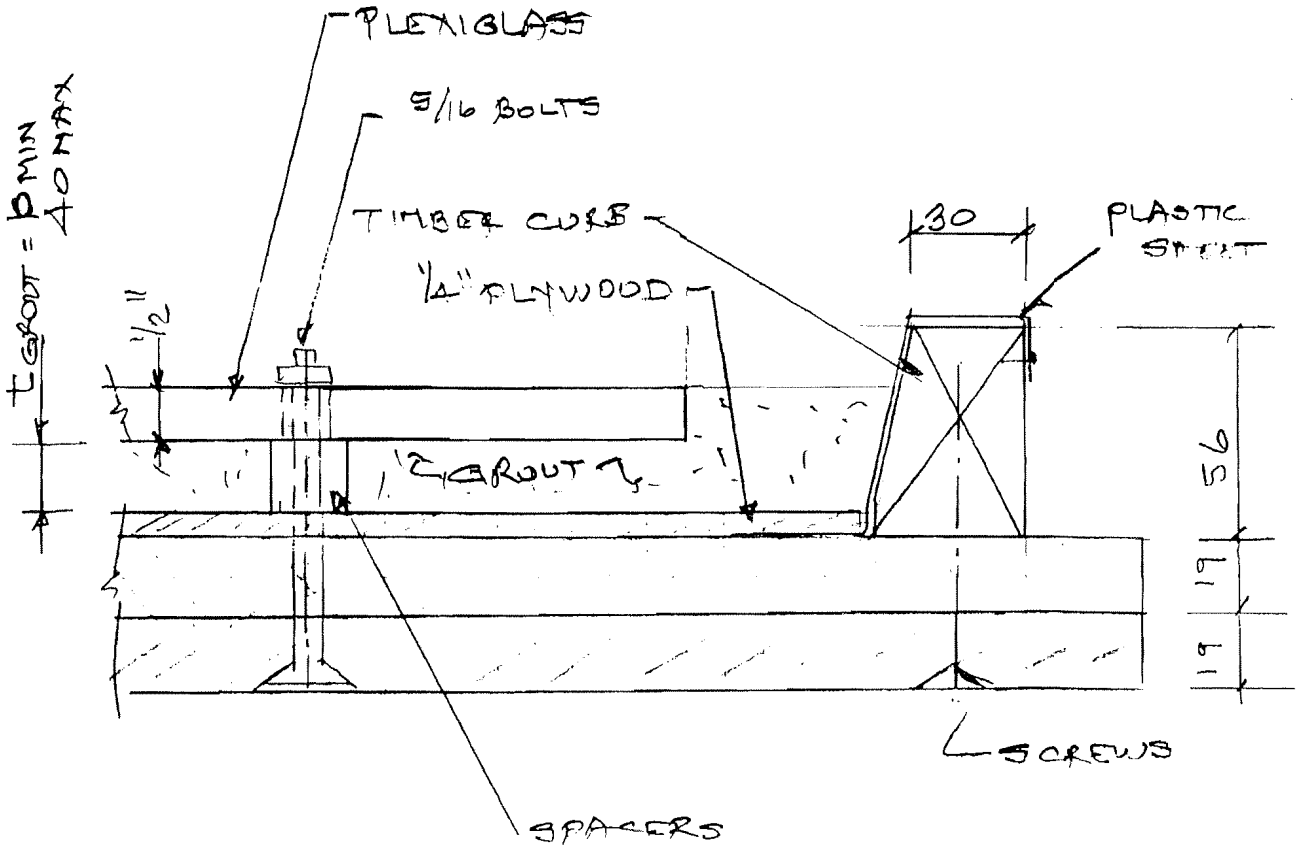

DETAIL 1 1:2

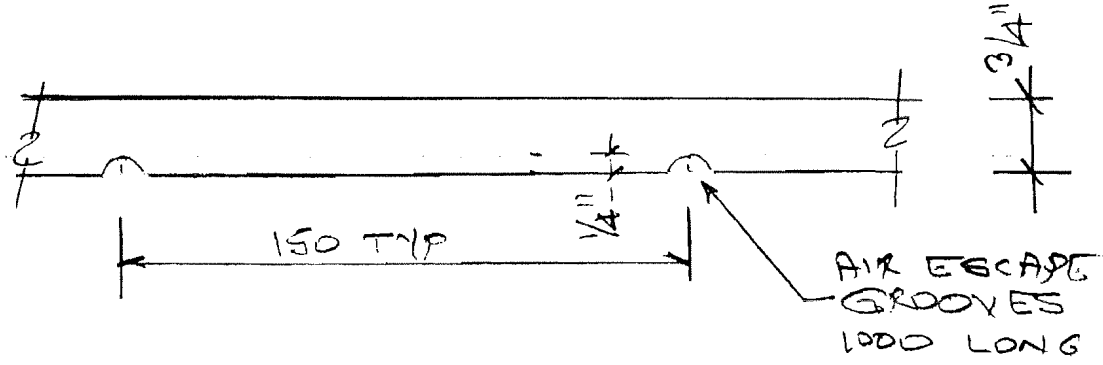

ALT PLEXIGLASS TO TEST OUT AIR ESCAPE GROOVES

CONTRACT NO. 04-0120R4

CONTRACT CHANGE ORDER NO 144

SHEET 5 OF 30

CONTRACT NO. 04-0120F4

CONTRACT CHANGE ORDER NO 147

SHEET 6 OF 30

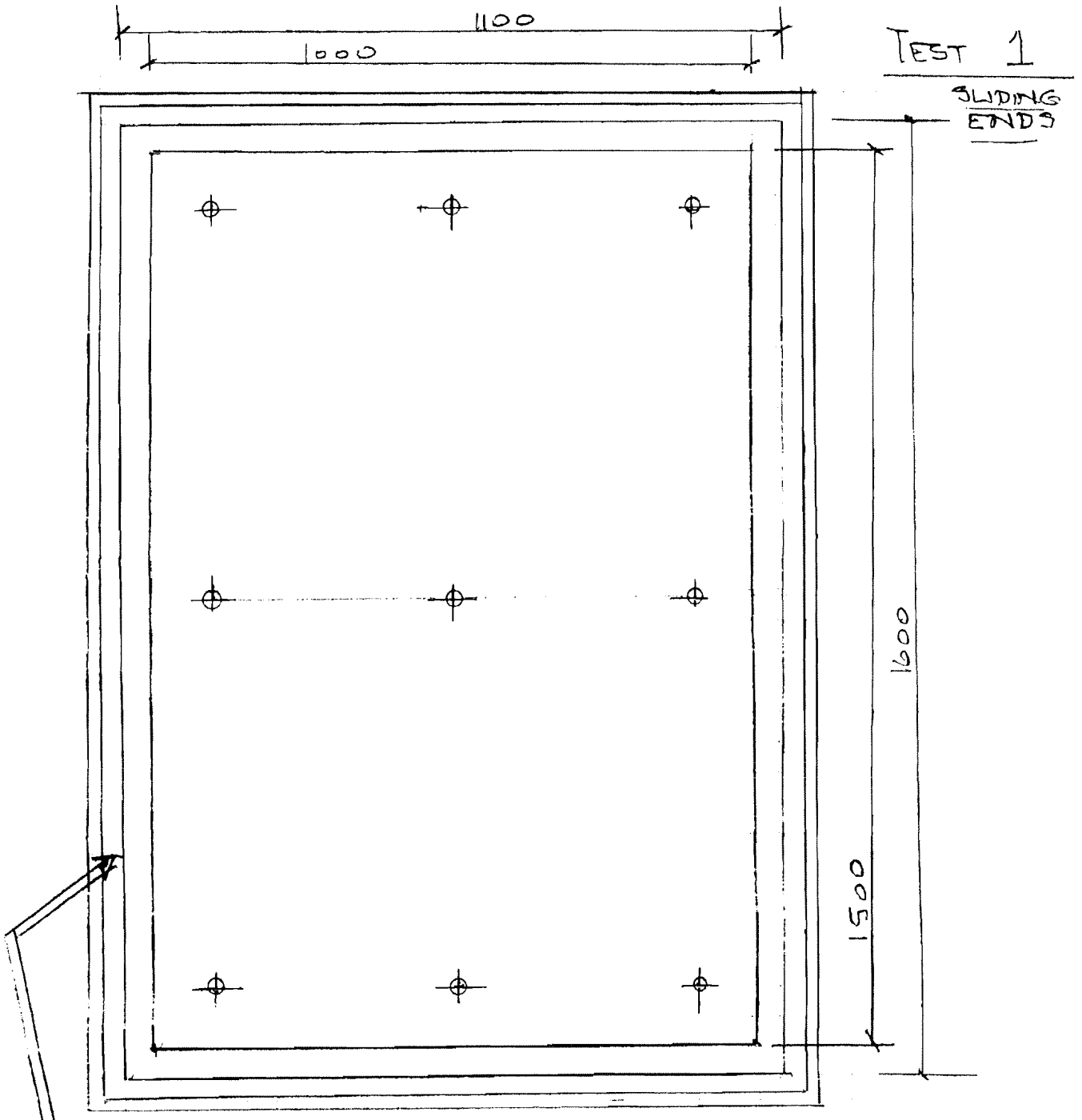

PLAN 1:10

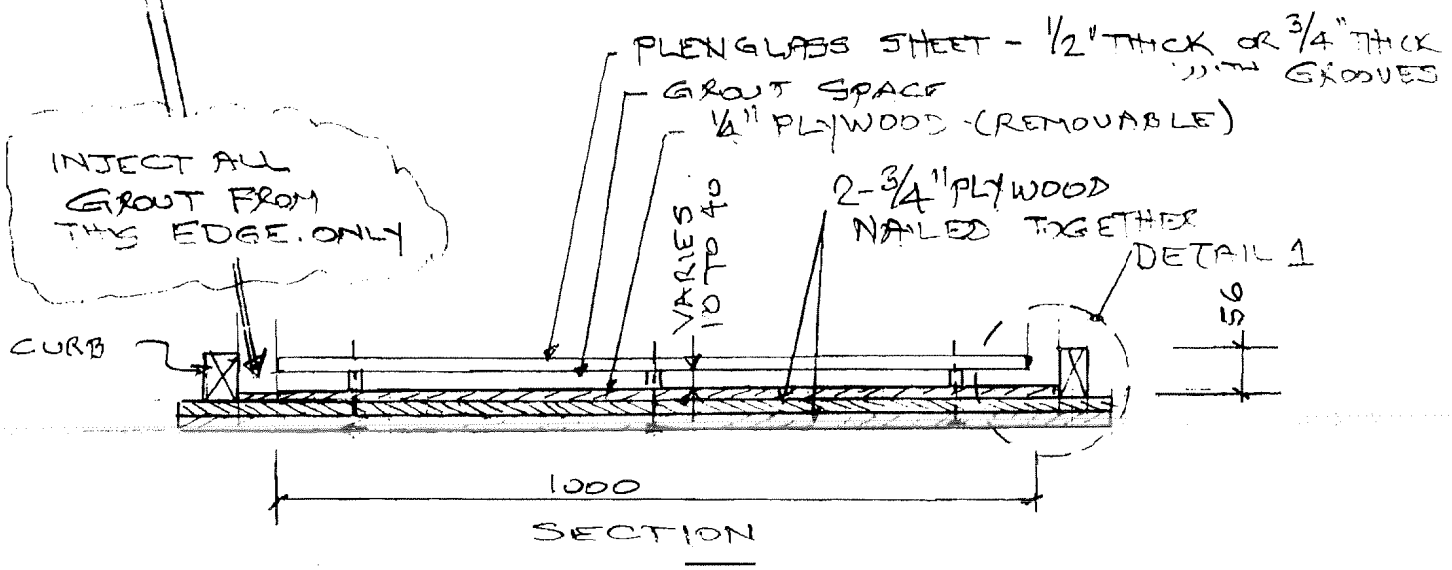

SECTION

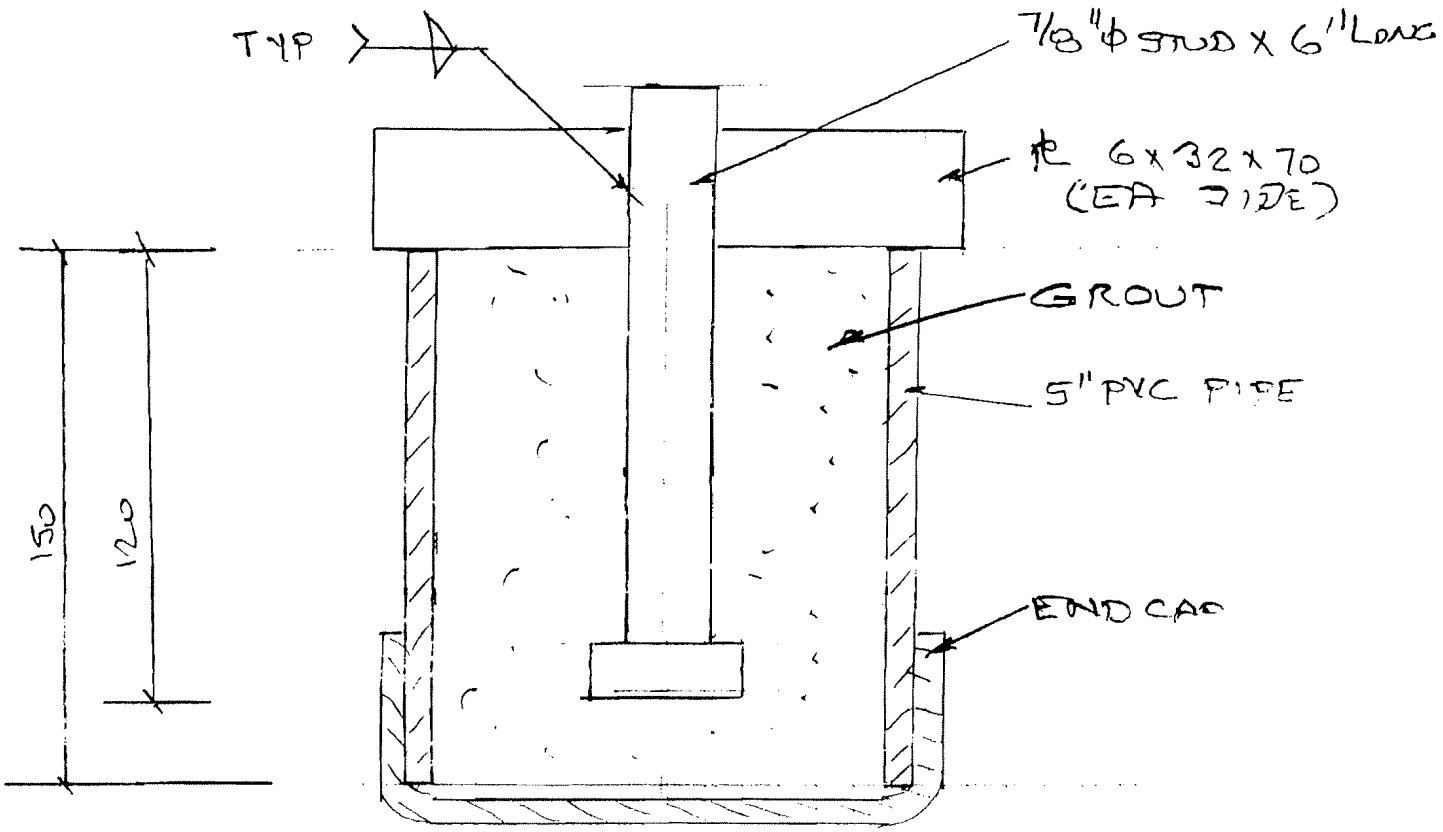

TEST 2

CONTRACT NO. 04-0120R4

CONTRACT CHANGE ORDER NO 144

SHEET 7 OF 30

TEST 3
FIXED ENDS
1:2

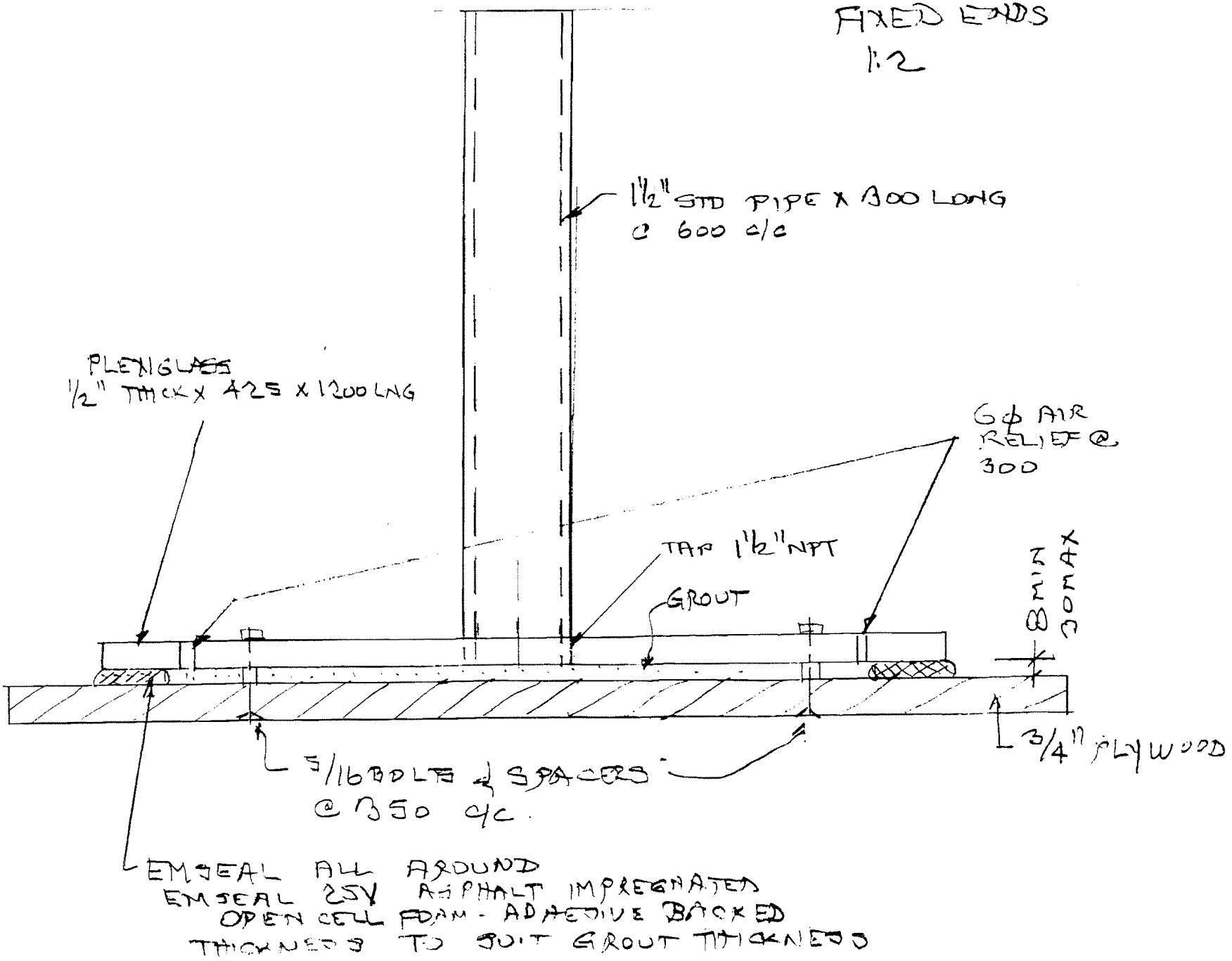

CONTRACT NO. 04-0120R4

CONTRACT CHANGE ORDER NO 144

SHEET 8 OF 30

SFOBB TEMPORARY BYPASS STRUCTURE

EAST TIE-IN SEGMENT
ROLL – OUT ROLL – IN

100% SUPERSTRUCTURE SPECIFICATIONS
(Expansion Joint Specifications Only)

BRIDGE NO. 34-0006 (TEMP)

Location: 04-SF-80-12.6/13.2
EA No.: 0120R4

Project Title: South/South Detour – San Francisco-Oakland Bay Bridge
Project No.: 1295

Volume 1 of 1

May 12, 2008

CONTRACT NO. 04-0120R4

CONTRACT CHANGE ORDER NO 144

SHEET 9 OF 30

CONTRACT NO. 04-0120R4

The special provisions contained herein have been prepared by or under the direction of the following Registered Persons.

STRUCTURES

REGISTERED CIVIL ENGINEER

CONTRACT NO. 04-0120R4

CONTRACT CHANGE ORDER NO 144

SHEET 10 OF 30

TABLE OF CONTENTS

TABLE OF CONTENTS 2
WORKING DRAWINGS 3
MATERIALS 4
MOCK UP 5
FABRICATION 6
INSTALLATION 7
MEASUREMENT AND PAYMENT 7

CONTRACT NO. 04-0120R4

CONTRACT CHANGE ORDER NO 144

SHEET 11 OF 30

10-1.__ EXPANSION JOINT

Expansion joints shall consist of steel deck plates, bolt boxes, support plates, sealing elements, bedding material, anchorage components and all other necessary components and shall be fabricated and installed in conformance with the details shown on the plans and as specified in the standard specifications and these special provisions.

Attention is directed to "Cooperation," of these special provisions.

Unless otherwise directed by the Engineer, prior to submitting working drawings, the Contractor shall inspect and report on the expansion joint locations in the structures adjacent to East Tie-In. The Contractor shall submit to the Engineer an inspection report for review and approval. This inspection report shall be titled "East Tie-In Expansion Joint Location Inspection Report" and shall describe the actual dimensions and details existing in these areas sufficiently to determine if any conflicts or mismatches exist that would require revision to the design and/or details of the expansion joints and/or the installation procedures. The report shall include recommendations to resolve any such issues. The Contractor shall allow the Engineer 10 days to review the "East Tie-In Expansion Joint Locations Inspection Report".

WORKING DRAWINGS

The Contractor shall submit working drawings in conformance with the provisions in "Working Drawings" of these special provisions, and the requirements specified herein.

Working drawings shall include complete details, information, and drawings of the expansion joints and anchorage components and the method, materials, equipment, and procedures for fabrication and installation that the Contractor proposes to use.

Working drawing submittals shall include the following:

A. Fabrication plans including all details, elevations, and sections of the expansion joint. All dimensions and design and installation tolerances shall be specified. Fabrication plans for the sizes of deck plates and support plates shall consider roadway super elevations and longitudinal gaps between the plates for sealing elements. Unless otherwise directed by the Engineer, fabrication plans shall take into full account all issues identified in the "East Tie-In Expansion Joint Locations Inspection Report."
B. All ASTM or other material designations.
C. Sections showing all materials comprising the expansion joint with complete details of all individual components including welded splices and connections, welding procedures, and the measures to be taken to prevent steel plate from distortion due to the heat of welding.
D. Joint installation plans including methods, materials, equipment, sequence, lifting attachments and locations, details of temporary anchorage during setting, temperature adjustment methods, method for maintaining full contact between deck plates and support plates during and after installation, installation details at curbs, seal installation details, and other procedures that the Contractor proposes to use for installation of the expansion joints including procedures to release restraint after initial set of the bedding material.
E. Bedding material selection, bedding material technical information, the results of any testing necessary to ensure that working time of the material will be adequate and that strength gain will be sufficiently rapid, and placement and material testing procedures.

CONTRACT NO. 04-0120R4
CONTRACT CHANGE ORDER NO 144
SHEET 12 OF 30

F. Details and procedures of the mock-up construction to demonstrate that the expansion joint can be installed in the field within the scheduled duration submitted by the Contractor in the Roll-out Roll-in plan and to provide training for the Contractor's personnel in the installation procedures.
G. List of coating system for expansion joints identifying cleaning and painting of all steel components as specified in "Clean and Paint Structural Steel" of these special provisions.
H. Anchorage components including concrete blockout details.
I. Storage plans for manufacture storage, interim storage, and on-site storage details including temporary support for the expansion joints.
J. Shipping plans including handling of the expansion joints during transportation. Each shipment of the expansion joint materials shall be accompanied by a Certificate of Compliance in conformance with the provisions in Section 6-1.07, "Certificates of Compliance," of the Standard Specifications. The certificate shall state that the materials and fabrication involved comply in all respects to the specifications and data submitted in obtaining approval.

After complete working drawings are received by the Engineer, the Contractor shall allow the Engineer 20 working days to review the submittal. No fabrication of the expansion joint shall begin until complete working drawings are reviewed and approved, in writing, by the Engineer.

MATERIALS

Attention is directed to "Welding" and "Audits" of these special provisions. Welding of expansion joint shall conform to AWS D1.5.

Structural steel shall conform to "Steel Structures" of these special provisions. Structural steel shall conform to the requirements of ASTM Designation: A 709M, Grade 345. Bolts, nuts and washers shall conform to the requirements of ASTM Designation: A 325 or A 325M and Section 75-1.03, "Miscellaneous Bridge Metal," of the Standard Specifications.

Sealing elements shall be 2 component silicone sealant that meets the requirements of Type A and AL seal in Section, 51-1.12F(3), "Materials and Installation," of the Standard Specifications. Strip seal shall be continuous without splices within the limits of each panel as shown on the plans.

Elastomeric washers shall conform to the requirements specified in Section 51-1.12H(1), "Plain and Fabric Reinforced Elastomeric Bearing Pads," of the standard specifications.

Bedding Material

The bedding material for setting the expansion joints shall be one of the following : epoxy plus silica sand mixture; rapid set mortar (without coarse aggregate); injectable rapid setting grout. The Contractor is to investigate and test materials to the degree necessary to ensure that the bedding material will perform as required and to allow the choice of bedding material to be made at least three months prior to the Roll-In operation. Contractor is to test all three material types and to provide a recommendation as to which he considers the most suitable. The determination of which material to use will be made by the Engineer after testing is complete.

Epoxy plus Silica Sand Mixture – to be a mixture of equal parts by volume of epoxy adhesive and silica sand. The material is to have adequate working time (pot life) to allow the expansion joint plates to be installed in the wet mixture with at least 30 minutes to spare before initial set. Tests are to be made to determine the time of initial set and the time at which a cube

NTRACT NO 08-4F8201 CONTRACT CHANGE ORDER NO 144
SHEET 13 OF 36

strength of 25 MPa is achieved at the thicknesses of material anticipated and at the range of ambient temperatures expected. Contractor is to provide, if necessary, different epoxy formulations so as to cover the full range of conditions anticipated on site. The material is to achieve a compressive cube strength of at least 25 MPa before it bears traffic

Rapid Set Mortar (without coarse aggregate) – to be a rapid setting mortar using only fine aggregate. To be used at a "masonry mortar" consistency for setting the expansion joints into. The material is to have adequate working time to allow the expansion joint plates to be installed in the wet mixture with at least 30 minutes to spare before initial set. Tests are to be made to determine the time of initial set at the thicknesses of material anticipated and at the range of ambient temperatures expected. Different mixes are to be available if necessary to accommodate the full range of anticipated conditions. The material is to achieve a compressive cube strength of at least 25 MPa within 8 hours of initial set before it bears traffic.

Cementitious Grout – to be a cementitious grouting material containing fine aggregate and admixtures as necessary to ensure the required workability, flowability and early strength. Particular attention is to be paid to the suitability of the material at the maximum anticipated thickness. The material must be injectable at extremely low pressure (less than 1000 mm of head) through 19 mm diameter injection holes and must be capable of flowing freely under the embedded plates at the minimum anticipated thickness and producing 90% contact with the plate. Tests are to be made to determine the time of initial set and the time at which a cube strength of 25 MPa is achieved at the various thicknesses of material anticipated and at the range of ambient temperatures expected. Different mixes are to be available if necessary to accommodate the full range of anticipated conditions. The material is to achieve a compressive cube strength of at least 25 MPa before it bears traffic.

MOCK UP

Contractor shall construct at least one full scale mock-up prior to the commencement of fabrication of any of the expansion joints to demonstrate that the installation methods forseen are workable and that the expansion joints can be installed in the field within the time scheduled by the Contractor for the Roll-out Roll-in operation. The mock-up shall be witnessed by the Engineer. Upon completion of a successful mockup installation, fabrication of the joints may commence. At a later date the mockup is to be used to train the installation crews and to otherwise practice for the actual installation.

Further detailed mockups will also be required in order to test the effectiveness of the bedding materials and their proposed installation methods so that a final selection of bedding material can be made by the Engineer.

The full scale mock-up shall be of one full panel (approximately one lane wide) of one of the expansion joints. It shall use plates of the thicknesses shown on the plans but need not use the grade of steel specified for the actual joints. The replication of the blockout in the concrete on the sliding side is to have a depth and length equal to that of the blockout detailed on the plans and shall also incorporate cylindrical blockouts for the stud anchors. The replication of the blockout on the fixed side is to incorporate a steel plate arrangement to replicate the top plate of the bolt box shown on the plans. The mock-up shall include bedding material, seals etc. as necessary to permit the installation of the bedding material, concrete, adjustment bolts, temporary fixing bolts, and all concrete embedments as shown on the plans and approved working drawings. The mock-up shall be capable of being re-used as necessary to prove all aspects of the installation. Upon completion of a mockup and achievement of 25MPa cube strength, the mockup shall be dis-assembled and the adequacy of the bedding material verified.

CONTRACT NO. 04-0120R4

CONTRACT CHANGE ORDER NO 144

SHEET 14 OF 30

Acceptance criteria of the full scale mock-up shall be as follows:

A. Mock-up expansion joint is installed within horizontal and level tolerances allowed for the actual expansion joint.
B. Mock-up shall be completed in the scheduled duration.
C. Bedding material installation methods and bedding material condition are shown to be satisfactory

If the mock-up fails to meet any of the acceptance criteria as determined by the Engineer, additional mock-ups shall be constructed or the mockup shall be re-used until a satisfactory result is achieved.

Detailed mockups Detailed mockups shall be constructed to test the installation methods for the bedding material and to prove that the resulting in-situ bedding material is acceptable. These mockups are to be carried out at the earliest feasible date. The results of these mockups will be used to make a final determination of what bedding ,aterial to use in the project.

The first type of mockup shall consist of 1500 mm x 1000 mm steel plates 32 mm thick, with four leveling screws but without shear studs, that are to be set in bedding material in recesses in concrete at both the maximum and minimum anticipated bedding material thicknesses. The recesses are to have cylindrical blockouts replicating the blockouts for the shear studs. All three types of acceptable bedding materials are to be tested. Following achievement of a cube strength in the bedding material of 25 MPa, the mockup shall be disassembled and the quality of the bedding achieved determined.

The second type of mockup shall consist of 1500 mm x 540 mm x 32 thick plates with four leveling screws that are to be set on steel plates replicating the arrangement at the bolt boxes at the fixed end of the expansion joints. The mockups are to be carried out at maximum and minimum anticipated bedding material thicknesses and for all of the three potential bedding materials. Following achievement of a cube strength in the bedding material of 25 MPa, the mockup shall be disassembled and the quality of the bedding achieved determined.

The mock-ups shall not be part of the permanent structure and shall become the property of the Contractor. The mock-ups shall be removed from the work site and shall be disposed of in conformance with the provisions in Section 7-1.13, "Disposal of Material Outside the Highway Right of Way," of the Standard Specifications.

FABRICATION

The expansion joint shall be fabricated in conformance with the details, dimensions, material specifications, and procedures shown in the approved working drawings.

At the time of installation, the surface of the bearing plate shall be in contact with the surface of the masonry plate such that no gap between the two plates exceeds 2.0 mm and such that the maximum distance between points of contact does not exceed 300 mm. The Contractor shall furnish sufficient temporary assembly bolts to ensure that this fit is achieved.

All plate welds shall be ground smooth. The welds shall not protrude into the sliding surface of the deck plates or support plates.

Cleaning and painting of all new metal surfaces of the expansion joints, except where embedded in concrete, shall conform to the requirements specified in "Clean and Paint Structural Steel" of these special provisions.

Damage to the expansion joint during shipping or handling shall be cause for rejection of the expansion joint.

Damage to the corrosion protection system shall be repaired to the satisfaction of the Engineer prior to installation.

INSTALLATION

Each expansion joint shall be installed in accordance with the approved working drawings.

The expansion joint segments shall be installed in such a manner as to produce a best fit road profile across each joint. To achieve this, the thickness of the bedding material may be varied within the range shown on the Contract Plans and the thickness of the adjacent overlay at each end of each joint is also to be adjusted to blend with the pavement surfaces existing at the time of Roll In. Best fit to the theoretical profile is to be determined on site when the survey is made and confiormed when the expansion joint plates are first installed and prior to the installation of the bedding material.

In order to determine best fit, the Contractor is to survey profiles along the edge of each plate once the ETI span is installed and set on bearings (permanent or temporary). The profiles shall be surveyed at 2 meter intervals extending at least 8 meters each side of each joint plate. The profiles are to be compared to the theoretical profiles in each case. Best fit is to be proposed by the Contractor based on this survey and is to be accepted by the Engineer (who will be on site at this time) before the installation of the bedding material is commenced.

The Contractor shall protect the expansion joint from damage. The Contractor shall protect concrete blockouts and support systems from damage and construction traffic prior to installation of the expansion joints.

The bridge deck surface shall conform to the provisions in "Asphalt Concrete" of these special provisions after installation of expansion joints.

MEASUREMENT AND PAYMENT

The contract lump sum price paid for expansion joint at the locations listed in the Engineer's Estimate shall include full compensation for furnishing all labor, materials, tools, equipment and incidentals, forming blockouts, and for doing all the work involved in fabricating, furnishing, transporting, storing, and installing the expansion joints, including bedding material, anchorage components, mock-up construction, protecting, repairing, cleaning and coating, complete in place, as shown on the plans, as specified in the Standard Specifications and these special provisions, and as directed by the Engineer.

Furnishing and erecting expansion joints including cover plates will be measured and paid for as furnish structural steel (bridge) and erect structural steel (bridge), respectively.

CONTRACT NO. 04-0120R4

CONTRACT CHANGE ORDER NO 144

SHEET 16 OF 30

INDEX TO PLANS
SHEET NO. TITLE

1. GENERAL PLAN (Note 1 & 3)
2. INDEX TO PLANS (Note 1,2,3 & 4)
3. GENERAL NOTES NO. 1 (Note 1)
4. GENERAL NOTES NO. 2 (Note 3)
5. DECK CONTOURS
6. FOUNDATION PLAN (Note 1)
7. BENT 52A LAYOUT
8. BENT CAP DETAILS NO. 1
9. BENT CAP DETAILS NO. 2
10. BENT CAP DETAILS NO. 3
11. BENT CAP DETAILS NO. 4
12. BENT 52A FOOTING DETAILS NO. 1 (Note 1)
13. BENT 52A FOOTING DETAILS NO. 2
14. SKID BENT FOOTING DETAILS NO. 1
15. SKID BENT FOOTING DETAILS NO. 2
16. SKID BENT FOOTING DETAILS NO. 3
17. SKID BENT FOOTING DETAILS NO. 4
18. SKID BENT FOOTING DETAILS NO. 5
19. SKID BENT FOOTING DETAILS NO. 6
20. SHEET NOT USED
21. SUPPORT AT PIER E1
22. SUPPORT AT PIER E1 DETAILS NO. 1
23. SUPPORT AT PIER E1 DETAILS NO. 2
24. SUPPORT AT PIER E1 DETAILS NO. 3
25. SUPPORT AT PIER E1 DETAILS NO. 4
26. SHEET NOT USED
27. FRAMING PLAN NO. 1 (Note 3)
28. FRAMING PLAN NO. 2
29. TYPICAL SECTION
30. CAMBER
31. SHEET NOT USED
32. TRUSS LAYOUT NO. 1 (Note 3)
33. TRUSS LAYOUT NO. 2
34. TRUSS LAYOUT NO. 3
35. TRUSS LAYOUT NO. 4
36. TRUSS JOINT DETAILS NO. 1
37. TRUSS JOINT DETAILS NO. 2
38. TRUSS JOINT DETAILS NO. 3
39. TRUSS JOINT DETAILS NO. 4
40. TRUSS JOINT DETAILS NO. 5
41. TRUSS JOINT DETAILS NO. 6
42. TRUSS JOINT DETAILS NO. 7
43. TRUSS JOINT DETAILS NO. 8
44. TRUSS JOINT DETAILS NO. 9
45. TRUSS JOINT DETAILS NO. 10
46. TRUSS JOINT DETAILS NO. 11
47. TRUSS JOINT DETAILS NO. 12
48. TRUSS JOINT DETAILS NO. 13
49. TRUSS JOINT DETAILS NO. 14
50. TRUSS JOINT DETAILS NO. 15
51. TRUSS JOINT DETAILS NO. 16
52. TRUSS JOINT DETAILS NO. 17
53. TRUSS JOINT DETAILS NO. 18
54. TRUSS JOINT DETAILS NO. 19
55. TRUSS JOINT DETAILS NO. 20
56. TRUSS JOINT DETAILS NO. 21
57. TRUSS JOINT DETAILS NO. 22
58. FLOOR BEAM DETAILS NO. 1
59. FLOOR BEAM DETAILS NO. 2
60. FLOOR BEAM DETAILS NO. 3
61. STRINGER DETAILS NO. 1 (Note 3)
62. STRINGER DETAILS NO. 2
63. STRINGER DETAILS NO. 3
64. STRINGER DETAILS NO. 4
65. STRINGER DETAILS NO. 5
66. STRINGER DETAILS NO. 6
67. UPPER LATERAL BRACING LAYOUT NO. 1
68. UPPER LATERAL BRACING LAYOUT NO. 2
69. LOWER LATERAL BRACING LAYOUT NO. 1
70. LOWER LATERAL BRACING LAYOUT NO. 2
71. LATERAL BRACING DETAILS NO. 1
72. LATERAL BRACING DETAILS NO. 2
73. LATERAL BRACING DETAILS NO. 3
74. LATERAL BRACING DETAILS NO. 4
75. LATERAL BRACING DETAILS NO. 5
76. LATERAL BRACING DETAILS NO. 6
77. LATERAL BRACING DETAILS NO. 7
78. LATERAL BRACING DETAILS NO. 8
79. LATERAL BRACING DETAILS NO. 9
80. SHEET NOT USED
81. SHEET NOT USED
82. SHEET NOT USED
83. SHEET NOT USED
84. STEEL GIRDER DETAILS (Note 3)
85. MAN HOLE & HAND HOLE DETAILS
86. CONCRETE DECK DETAILS NO. 1
87. CONCRETE DECK DETAILS NO. 2
88. CONCRETE DECK DETAILS NO. 3
89. POUR SEQUENCE
90. BENT 52A EXPANSION JOINT LAYOUT (Note 4)
91. BENT 52A EXPANSION JOINT DETAILS NO. 1
92. BENT 52A EXPANSION JOINT DETAILS NO. 2
93. BENT 52A EXPANSION JOINT DETAILS NO. 3
94. BENT 52A EXPANSION JOINT DETAILS NO. 4
95. BENT 52A EXPANSION JOINT DETAILS NO. 5
96. BENT 52A EXPANSION JOINT DETAILS NO. 6
97. BENT 52A EXPANSION JOINT BARRIER NO. 1
98. BENT 52A EXPANSION JOINT BARRIER NO. 2
99. PIER E1 EXPANSION JOINT LAYOUT
100. PIER E1 EXPANSION JOINT DETAILS NO. 1
101. PIER E1 EXPANSION JOINT DETAILS NO. 2
102. PIER E1 EXPANSION JOINT DETAILS NO. 3
103. PIER E1 EXPANSION JOINT DETAILS NO. 4
104. PIER E1 EXPANSION JOINT DETAILS NO. 5
105. PIER E1 EXPANSION JOINT BARRIER NO. 1
106. PIER E1 EXPANSION JOINT BARRIER NO. 2
107. PIER E1 EXPANSION JOINT BARRIER NO. 3
108. PIER E1 EXPANSION JOINT BARRIER NO. 4
109. PIER E1 EXPANSION JOINT BARRIER NO. 5
110. PIER E1 EXPANSION JOINT BARRIER NO. 6
111. PIER E1 EXPANSION JOINT BARRIER NO. 7
112. JOINT SEAL ASSEMBLY (Note 3)
113. BEARING DETAILS NO. 1
114. BEARING DETAILS NO. 2
115. MISCELLANEOUS DETAILS NO. 1 (Note 3)
116. MISCELLANEOUS DETAILS NO. 2
117. MISCELLANEOUS DETAILS NO. 3
118. MISCELLANEOUS DETAILS NO. 4
119. MISCELLANEOUS DETAILS NO. 5
120. EXISTING TRUSS LAYOUT NO. 1
121. EXISTING TRUSS LAYOUT NO. 2
122. EXISTING TRUSS DETAILS NO. 1
123. EXISTING TRUSS DETAILS NO. 2
124. EXISTING TRUSS DETAILS NO. 3
125. EXISTING TRUSS DETAILS NO. 4
126. EXISTING TRUSS DETAILS NO. 5
127. EXISTING TRUSS DETAILS NO. 6
128. EXISTING TRUSS DETAILS NO. 7
129. EXISTING TRUSS DETAILS NO. 8
130. EXISTING TRUSS DETAILS NO. 9
131. EXISTING TRUSS DETAILS NO. 10
132. SKID BENT LAYOUT (Note 2)
133. SKID BENT SECTIONS NO. 1
134. SKID BENT SECTIONS NO. 2
135. KID BENT SECTIONS NO. 3
136. SKID BENT DETAILS NO. 1
137. SKID BENT DETAILS NO. 2
138. SKID BENT DETAILS NO. 3
139. SKID BENT DETAILS NO. 4
140. SKID BENT DETAILS NO. 5
141. SKID BENT DETAILS NO. 6
142. SKID BENT DETAILS NO. 7
143. SKID BENT DETAILS NO. 8
144. SKID BENT DETAILS NO. 9
145. SKID BENT DETAILS NO. 10
146. SKID BENT DETAILS NO. 11
147. SKID BEAM DETAILS NO. 1
148. SKID BEAM DETAILS NO. 2
149. SKID BEAM DETAILS NO. 3
150. SKID BEAM DETAILS NO. 4
151. SKID BEAM DETAILS NO. 5
152. SKID BEAM DETAILS NO. 6
153. SKID BEAM DETAILS NO. 7
154. SHEET NOT USED
155. ROLL-OUT ROLL-IN OPERATION SEQUENCE NO. 1
156. ROLL-OUT ROLL-IN OPERATION SEQUENCE NO. 2
157. ROLL-OUT ROLL-IN OPERATION SEQUENCE NO. 3
158. ROLL-OUT ROLL-IN OPERATION SEQUENCE NO. 4
159. ROLL-OUT ROLL-IN OPERATION SEQUENCE NO. 5
160. ROLL-OUT ROLL-IN OPERATION SEQUENCE NO. 6
161. ROLL-OUT ROLL-IN TOLERANCES AND DEFLECTIONS
162. EXISTING YB4 TRUSS LIFTING PROCEDURE
163. NEW ETI TRUSS SETTING PROCEDURE
164. TEMPORARY BEARING LAYOUT
165. TEMPORARY BEARING DETAILS
166. EXISTING YB4 TRUSS WORK PLAN NO. 1
167. EXISTING YB4 TRUSS WORK PLAN NO. 2
168. TO 200. SHEET NOT USED
201. LOG OF TEST BORINGS NO. 1 (Note 1)
202. LOG OF TEST BORINGS NO. 2
203. LOG OF TEST BORINGS NO. 3
204. LOG OF TEST BORINGS NO. 4
205. LOG OF TEST BORINGS NO. 5
206. LOG OF TEST BORINGS NO. 6
207. LOG OF TEST BORINGS NO. 7
208. LOG OF TEST BORINGS NO. 8
209. LOG OF TEST BORINGS 1 OF 17
210. LOG OF TEST BORINGS 3 OF 17
211. LOG OF TEST BORINGS 5 OF 17
212. LOG OF TEST BORINGS 6 OF 17
213. LOG OF TEST BORINGS 16 OF 17
214. LOG OF TEST BORINGS 17 OF 17

Caltrans Metric

DIST	COUNTY	ROUTE	KILOMETER POST TOTAL PROJECT	SHEET NO.	TOTAL
04	SF	80	12.6/13.2		

Mark K. Reid
REGISTERED CIVIL ENGINEER

5-12-08
PLANS APPROVAL DATE

Registered Professional Engineer — Raglon Kumar Sibi — No. C59203 — Exp. 06/30/09 — CIVIL — State of California

The State of California or its officers or agents shall not be responsible for the accuracy or completeness of electronic copies of this pen sheet

T.Y.LIN / MOFFATT & NICHOL
Two Harrison Street, Suite 500
San Francisco, CA 94105

CONTRACT NO. 04-012004

CONTRACT CHANGE ORDER NO 144

SHEET 17 OF 36

Notes:

1. Sheets pertaining to 100% Concrete Substructure submittal (Submittal Date 11-5-07).
2. Sheets pertaining to 100% Skid Bent and Skid Beam submittal (Submittal Date 3-15-08).
3. Sheets pertaining to 100% Truss submittal (Submittal Date 4-7-08).
4. Sheets pertaining to 100% Expansion Joints and Expansion Joint Barriers submittal (Submittal Date 5-12-08).

ALL DIMENSIONS ARE IN MILLIMETERS UNLESS OTHERWISE SHOWN

SAN FRANCISCO OAKLAND BAY BRIDGE
EAST SPAN SEISMIC SAFETY PROJECT

EAST TIE-IN

INDEX TO PLANS

T. Ostrom/M. Whiteside/A. Akinsonyo — DESIGN BY M. Sih — CHECKED S. Cheng
DETAILS BY S. Lee — CHECKED A. Lee
QUANTITIES BY S. Ng-Sen — CHECKED J. Lee

PREPARED FOR THE STATE OF CALIFORNIA
DEPARTMENT OF TRANSPORTATION

M. Sah — PROJECT ENGINEER
S. Adkins — PROJECT MANAGER
CU EA 012004

BRIDGE NO. 34-0006 (TEMP)
RELINQUISHED 12.6

DISREGARD PRINTS BEARING EARLIER REVISION DATES

REVISION DATES (PRELIMINARY STAGE ONLY)

SHEET 2 OF 214

SIGN OFF DATE

DESIGN DETAIL SHEET (METRIC) REV. 3/1/01
BGASE6 eTIME6 Pen Table File

ORIGINAL SCALE IN MILLIMETERS FOR REDUCED PLANS 0 10 20 30 40 50 60 70 80 90 100

FILE = P:\SBS\04-012001\ETI\Dgn\sqa1fp1.dgn

DIST	COUNTY	ROUTE	KILOMETER POST TOTAL PROJECT	SHEET No.	TOTAL
04	SF	80	12.4/13.2		

Caltrans Metric

REGISTERED CIVIL ENGINEER

5-12-08
PLANS APPROVAL DATE

The State of California or its officers or agents shall not be responsible for the accuracy or completeness of electronic copies of this plan sheet.

Charles Redfield, No. C 27605, Exp. 12/31/09, CIVIL, State of California

T.Y. LIN / MOFFATT & NICHOL
Two Harrison Street, Suite 500
San Francisco, CA 94105

LEGEND:

Indicates steel deck plate with V-grooves at ±45°.

Notes:

1. The Contractor shall verify all controlling field dimensions before ordering or fabricating any material.
2. For Sections A-A and B-B, see "Bent 52A Expansion Joint Details No. 1" and "Bent 52A Expansion Joint Details No. 3" sheet.
3. For Fuse Panel details, see "Bent 52A Expansion Joint Details No. 5" sheet.
4. For Barrier expansion joint and cover ℄ details, see "Bent 52A Expansion Joint Barriers" sheets.

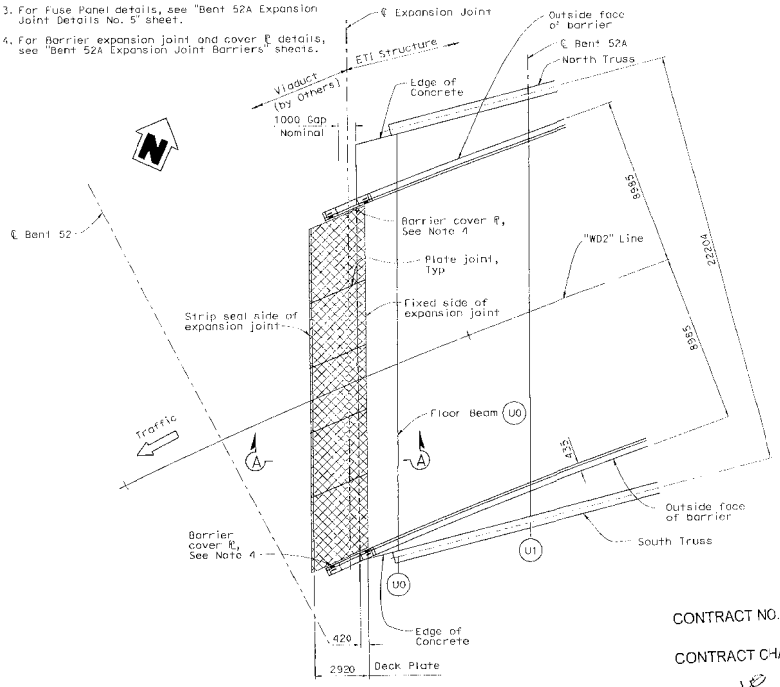

PLAN EXPANSION JOINT UPPER DECK
1:100

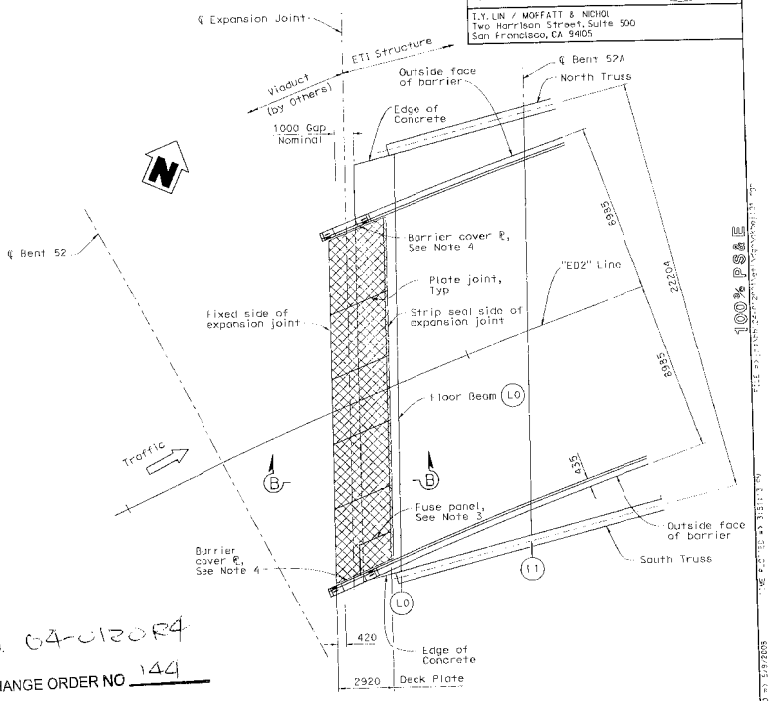

PLAN EXPANSION JOINT LOWER DECK
1:100

CONTRACT NO. 04-012004

CONTRACT CHANGE ORDER NO 144

SHEET 18 OF 30

ALL DIMENSIONS ARE IN MILLIMETERS UNLESS OTHERWISE SHOWN

SAN FRANCISCO OAKLAND BAY BRIDGE
EAST SPAN SEISMIC SAFETY PROJECT

EAST TIE-IN

BENT 52A EXPANSION JOINT LAYOUT

T. Ostrom/M. Whiteside/A. Akinsanya	DESIGN BY C. Redfield, R. Nutt	CHECKED S. Cheng	PREPARED FOR THE STATE OF CALIFORNIA DEPARTMENT OF TRANSPORTATION
DESIGN SUPERVISOR	DETAILS BY	CHECKED A. Lee	M. Soh, PROJECT ENGINEER; C. Marks, PROJECT MANAGER
SIGN OFF DATE	QUANTITIES BY M. Nelson	ENGINEER	CU 34-0006 (TEMP.), EA 012004, KILOMETER POST 12.6

DESIGN DETAIL SHEET (METRIC) REV. 3/1/98
BOATER ★TIMES★ Pen Table File

ORIGINAL SCALE IN MILLIMETERS FOR REDUCED PLANS 0 10 20 30 40 50 60 70 80 90 100

DISREGARD PRINTS DEARMC EARLIER REVISION DATES: 11/05/07, 12/07/06, 5/11/06

BRIDGE NO. 34-0006 (TEMP.)

SHEET 90 OF 214

FILE => p:\065\04-012004\all\sdgn\04be0101.dgn

DATE PLOTTED => 1/9/2008

DIST	COUNTY	ROUTE	KILOMETER POST TOTAL PROJECT	SHEET NO	TOTAL
04	SF	80	12.6/13.2		

REGISTERED CIVIL ENGINEER
5-12-08
PLANS APPROVAL DATE
Charles Redfield No. C 27605 Exp. 12/31/09 CIVIL STATE OF CALIFORNIA

The State of California or its officers or agents shall not be responsible for the accuracy or completeness of electronic copies of this plan sheet.

T.Y. LIN / MOFFATT & NICHOL
Two Harrison Street, Suite 500
San Francisco, CA 94105

SECTION A-A
1:10
Expansion Joint in Upper Deck

DETAIL 1
1:5

DETAIL 3
No Scale

DETAIL 4
No Scale

Note: Detail drawn for upper deck expansion joint.
Detail for lower deck expansion joint similar.

CONTRACT NO. 04-0120R4

CONTRACT CHANGE ORDER NO. 144

SHEET 19 OF 30

Notes:

1. The Contractor shall verify all controlling field dimensions before ordering or fabricating any material.
2. Expansion Joint Movements:
   Thermal Movement: Longitudinal 40± mm
   Seismic Movement: Longitudinal 1000± mm *
   Transverese 1075± mm *
   * To account for potential variations in the response spectrum, a factor of safety of 1.5 has been applied and included in these values.
3. For end beam and stringer, see "Stringer Details" sheets.
4. Masonry and bearing plates fixed to Deck Panel plates and to be released upon completion of installation and grouting after initial set is achieved.
5. For strip seal detail, see "Bent 52A Expansion Joint Details No. 3" sheet.
6. For deck reinforcement details, see "Concrete Deck Details" sheets.
7. For Detail 2, see "Bent 52A Expansion Joint Details No. 3" sheet.

ALL DIMENSIONS ARE IN MILLIMETERS UNLESS OTHERWISE SHOWN

SAN FRANCISCO OAKLAND BAY BRIDGE
EAST SPAN SEISMIC SAFETY PROJECT

EAST TIE-IN

BENT 52A EXPANSION JOINT DETAILS NO. 1

T. Ostrom/M. Whiteside/A. Akinsanya
DESIGN OVERSIGHT

DESIGN	BY C. Redfield, R. Nutt	CHECKED S. Cheng
DETAILS	BY	CHECKED
QUANTITIES	BY H. Nelson	CHECKED A. Lee

PREPARED FOR THE STATE OF CALIFORNIA DEPARTMENT OF TRANSPORTATION

M. Sah PROJECT ENGINEER
PROJECT MANAGER

BRIDGE NO. 34-0006 (TEMP)
KILOMETER POST 12.6

CU
EA 0120R4

DISREGARD PRINTS BEARING EARLIER REVISION DATES

ORIGINAL SCALE IN MILLIMETERS FOR REDUCED PLANS 0 10 20 30 40 50 60 70 80 90 100

SHEET 91 OF 214

DESIGN DETAIL SHEET (METRIC)(REV. 3/1/95)

FILE => p:\bo\04-0120D1\eti\dgn\akbejdt1.dgn

DATE PLOTTED => 5/9/2008

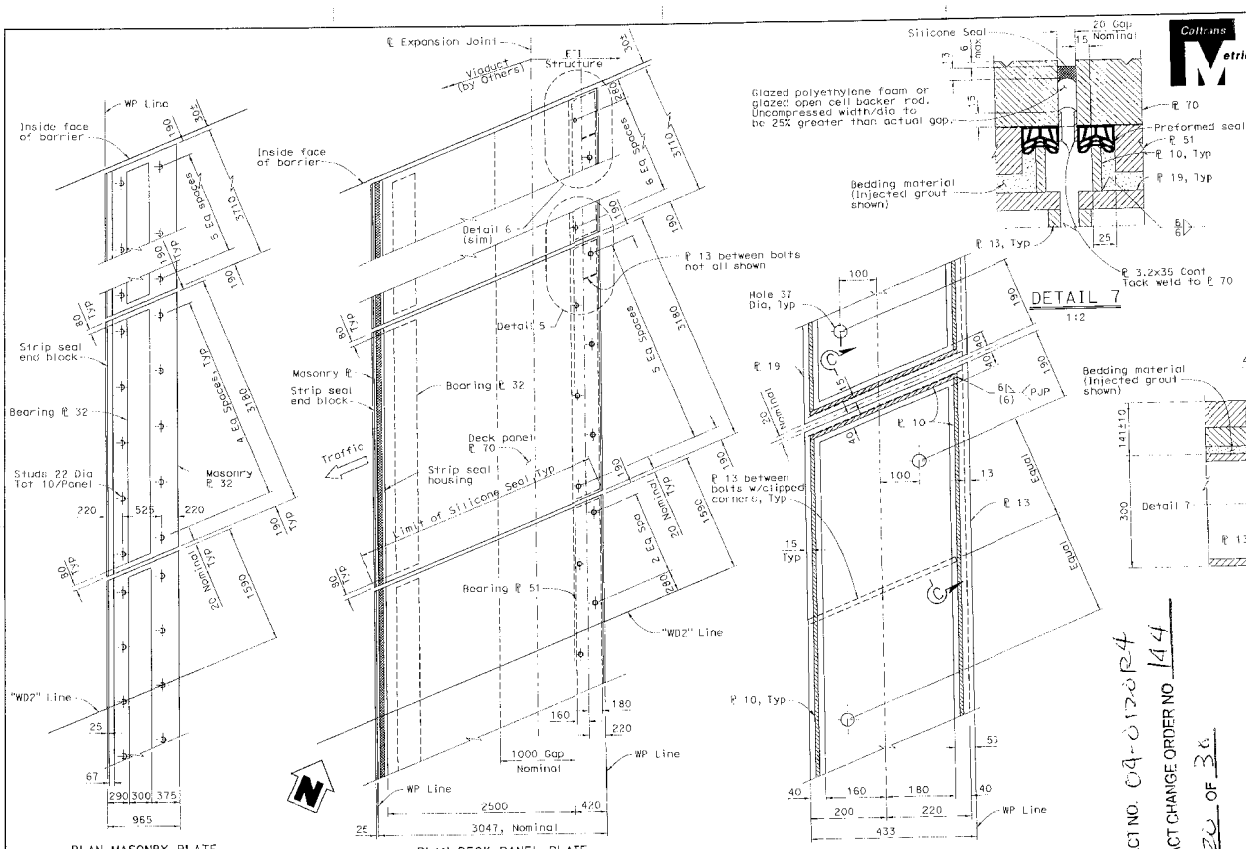

PLAN MASONRY PLATE

PLAN DECK PANEL PLATE

TYPICAL PANELS - UPPER DECK

1:25

Panels to the left of "WD2" line shown
Panels to the right of "WD2" line similar
Gap not drawn to scale

DETAIL 5

1:5

Detail drawn for Expansion Joint Upper Deck
Detail for Expansion Joint Lower Deck similar
Plan view of Bolt box below Deck panel

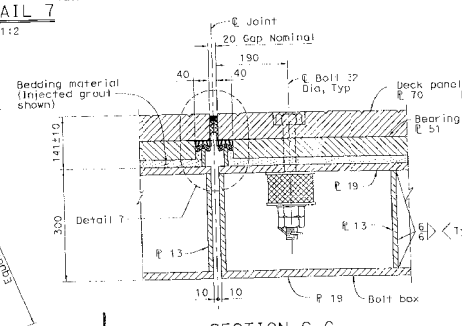

SECTION C-C

1:5

Notes:

1. The Contractor shall verify all controlling field dimensions before ordering or fabricating any material.
2. Dimensions are given parallel to or perpendicular to "WD2" Line.
3. The stringers are not shown for clarity.
4. For Detail 6, see "Bent 52A Expansion Joint Details No. 4" sheet.
5. Direction of thermal movement.

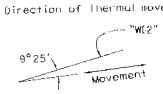

ALL DIMENSIONS ARE IN MILLIMETERS UNLESS OTHERWISE SHOWN

CONTRACT NO. 04-0120R4

CONTRACT CHANGE ORDER NO 144

SHEET 20 OF 36

DIST	COUNTY	ROUTE	KILOMETER POST TOTAL PROJECT	SHEET No	TOTAL
04	SF	80	12.6/13.2		

REGISTERED CIVIL ENGINEER

5-12-08

PLANS APPROVAL DATE

The State of California or its officers or agents shall not be responsible for the accuracy or completeness of electronic copies of this plan sheet.

REGISTERED PROFESSIONAL ENGINEER Charles Redfield No. C 27605 Exp. 12/31/09 CIVIL STATE OF CALIFORNIA

T.Y. LIN / MOFFATT & NICHOL
Two Harrison Street, Suite 500
San Francisco, CA 94105

100% PS&E

SAN FRANCISCO OAKLAND BAY BRIDGE
EAST SPAN SEISMIC SAFETY PROJECT

EAST TIE-IN

BENT 52A EXPANSION JOINT DETAILS NO. 2

DESIGN	BY C. Redfield, R. Nutt	CHECKED S. Cheng	
DETAILS	BY [illegible]	CHECKED [illegible]	
QUANTITIES	BY H. Nelson	CHECKED A. Lee	

T. Ostrom/M. Whiteside/A. Akinsanya
DESIGN OVERSIGHT

STOP OFF DATE

DESIGN DETAIL SHEET (METRIC REV. 3/4/98)
#DATE# #TIME# Pan Table File

PREPARED FOR THE STATE OF CALIFORNIA DEPARTMENT OF TRANSPORTATION

M. Sah
PROJECT ENGINEER
C. Abbas
PROJECT MANAGER

BRIDGE NO. 34-0006 (TEMP)
KILOMETER POST 12.6

CU
EA 0120R4

DISREGARD PRINTS DRAWING EARLIER REVISION DATES

REVISION DATES (PRELIMINARY STAGE ONLY)

SHEET 92 OF 214

ORIGINAL SCALE IN MILLIMETERS FOR REDUCED PLANS 0 10 20 30 40 50 60 70 80 90 100

FILE => p:\bb\04-0120R4\eti\ogn\akbej002.dgn

DATE PLOTTED => 5/9/2008

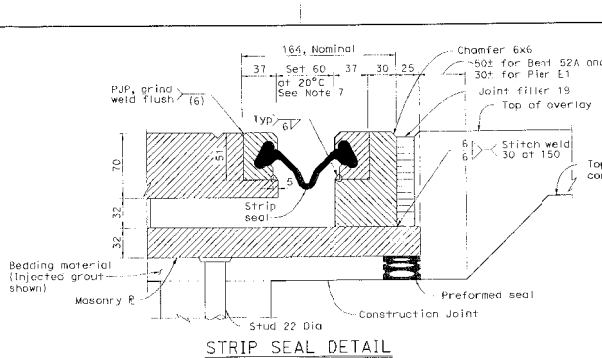

STRIP SEAL DETAIL

1:2

Detail drawn for Expansion Jt at Bent 52A.
For detail variation at Pier E1, see "Pier E1 Expansion Joint Details No. 1" sheet.

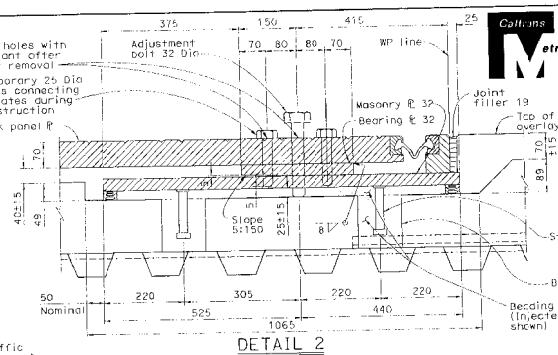

DETAIL 2

1:5

Detail shown for Lower Deck,
Upper Deck similar

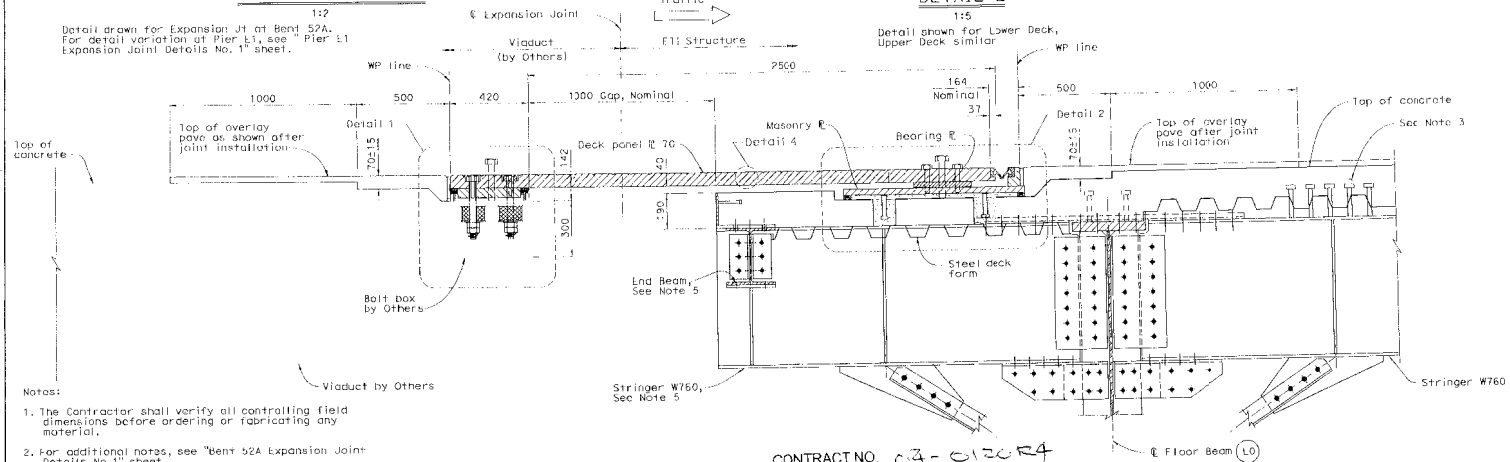

SECTION B-B

1:10

Expansion Joint in Lower Deck

Notes:

1. The Contractor shall verify all controlling field dimensions before ordering or fabricating any material.
2. For additional notes, see "Bent 52A Expansion Joint Details No.1" sheet.
3. For deck reinforcement details, see "Concrete Deck Details" sheets.
4. For Detail 1, see "Bent 52A Expansion Joint Details No. 1" sheet.
5. For End Beam and stringer details, see "Stringer Details" sheets.
6. For Detail 4, see "Bent 52A Expansion Joint Detail No.1" sheet.
7. Strip seal shall have a movement rating of 100mm.

CONTRACT NO. 04-0120R4

CONTRACT CHANGE ORDER NO 144

SHEET 21 OF 30

ALL DIMENSIONS ARE IN MILLIMETERS UNLESS OTHERWISE SHOWN

DIST	COUNTY	ROUTE	KILOMETER POST TOTAL PROJECT	SHEET TOTAL NO.
04	SF	80	12.5/13.2	

REGISTERED CIVIL ENGINEER

5-12-08
PLANS APPROVAL DATE

The State of California or its officers or agents shall not be responsible for the accuracy or completeness of electronic copies of this plan sheet.

T.Y. LIN / MOFFATT & NICHOL
Two Harrison Street, Suite 300
San Francisco, CA 94105

T. Ostrom/M. Whiteside/A. Akinsanya	DESIGN	BY C. Sedfield, R. Nutt	CHECKED S. Chang
DESIGN OVERSIGHT	DETAILS	BY S. Lee, P. Zhao	CHECKED A. Lee
SIGN OFF DATE	QUANTITIES	BY H. Nelson	CHECKED A. Lee

PREPARED FOR THE STATE OF CALIFORNIA DEPARTMENT OF TRANSPORTATION

M. Soh — PROJECT ENGINEER
S. Abbas — PROJECT MANAGER
CU
EA 0120R4

BRIDGE NO. 34-0006 (TEMP)
KILOMETER POST 12.6

SAN FRANCISCO OAKLAND BAY BRIDGE
EAST SPAN SEISMIC SAFETY PROJECT

EAST TIE-IN

BENT 52A EXPANSION JOINT DETAILS NO. 3

DESIGN DETAIL SHEET METRIC REV. 3/1998
MDATE# #TIME# Pen Table File

ORIGINAL SCALE IN MILLIMETERS FOR REDUCED PLANS 0 10 20 30 40 50 60 70 80 90 100

FILE => p:\bb\04-012001.wfl\dgn\xkba|d03.dgn

DISCREPANCIES ARISE EARLIER REVISION DATES

REVISION DATES (PRELIMINARY STAGE ONLY)

SHEETS	NO.
93	214

100% PLANS

DATE PLOTTED => 5/9/2008 11:32:12 PM

USERNAME => K.K.68

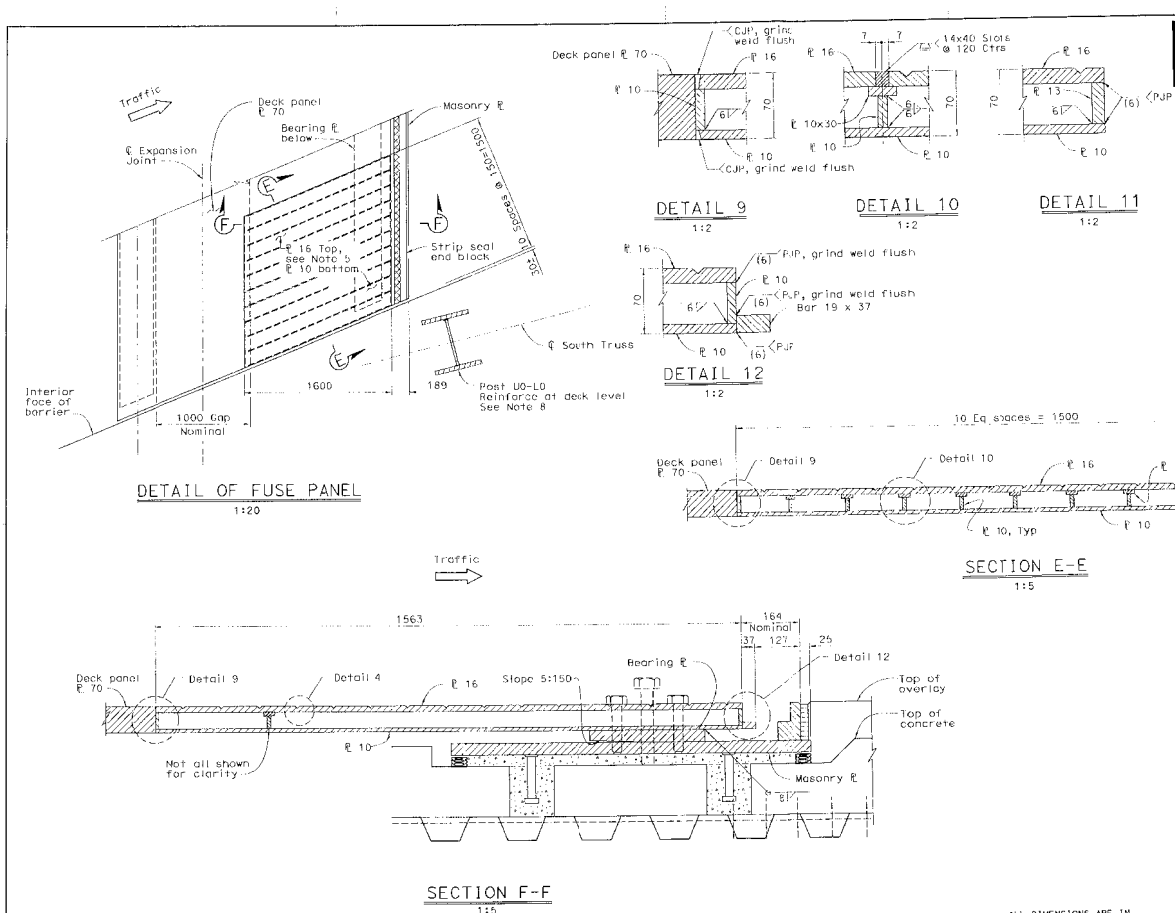

DIST	COUNTY	ROUTE	KILOMETER POST TOTAL PROJECT	SHEET NO	TOTAL
04	SF	80	12.6/13.2		

REGISTERED CIVIL ENGINEER

5-12-08

PLANS APPROVAL DATE

The State of California or its officers or agents shall not be responsible for the accuracy or completeness of electronic copies of this plan sheet.

REGISTERED PROFESSIONAL ENGINEER Charles Redfield No. C 27605 Exp. 12/31/08 CIVIL STATE OF CALIFORNIA

T.Y. LIN / MOFFATT & NICHOL
Two Harrison Street, Suite 500
San Francisco, CA 94105

CONTRACT NO. 04-0120R4

CONTRACT CHANGE ORDER NO 144

SHEET 23 OF 30

Notes:

1. Contractor shall verify all controlling field dimensions before ordering or fabricating any material.
2. Direction of thermal movement

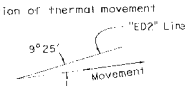

3. The stringers are not shown here for clarity.
4. For balance of details, see "Bent 52A Expansion Joint Details No. 3" sheet.
5. Plate with V-Grooves at 45°.
6. For Detail 4, see "Bent 52A Expansion Joint Detail No. 1" sheet.
7. Strip seal element not shown here for clarity.
8. For reinforcement of post, see "Miscellaneous Details" sheets.

ALL DIMENSIONS ARE IN MILLIMETERS UNLESS OTHERWISE SHOWN

SAN FRANCISCO OAKLAND BAY BRIDGE
EAST SPAN SEISMIC SAFETY PROJECT

EAST TIE-IN

BENT 52A EXPANSION JOINT DETAILS NO. 5

T. Ostrom/M. Whiteside/A. Akinsanya
DESIGN OVERSIGHT

DESIGN BY C. Redfield, R. Nutt — CHECKED S. Cheng
QUANTITIES BY R. Nelson — CHECKED A. Lee

PREPARED FOR THE STATE OF CALIFORNIA DEPARTMENT OF TRANSPORTATION

K. Soh — PROJECT ENGINEER
PROJECT MANAGER

BRIDGE NO. 34-0006 (TEMP)
PLOT/SHEET POST 12.6

CU
EA 0120R4

DISREGARD PRINTS BEARING EARLIER REVISION DATES

SHEET 95 OF 214

DESIGN DETAIL SHEET (METRIC) REV. 3/7/08
DATE TIME Pen Table File

ORIGINAL SCALE IN MILLIMETERS FOR REDUCED PLANS

FILE = p:\hb\04-012001\etl\dgn\akhej05.dgn

100% PS&E

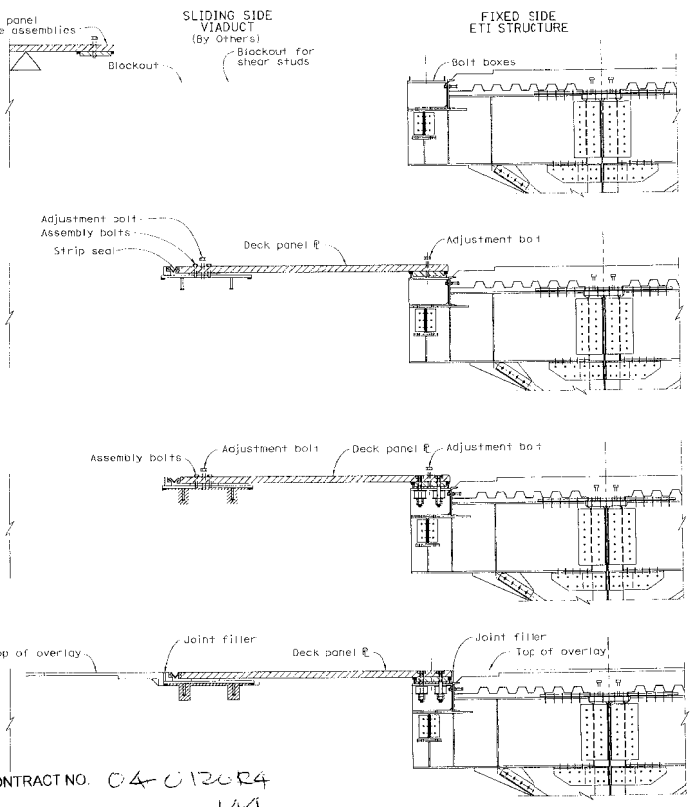

Note: Sequence shown for use of injected grout as bedding material.

Phase 1: - Joint situation at completion of Roll-in operation.

1. Deck on sliding side prepared with blockouts to receive the masonry plate and the vertical shear studs.
2. Bolt boxes cast in on the fixed side.
3. Deck panel plate assemblies prefabricated including prepositioned bearing and masonry plates and strip seals.
   a. Strip seal end block welded to masonry plate. Set gap for anticipated installation temperatures.
   b. Strip seals installed in each individual plate assembly.
4. Place deck panel assemblies for the Bent 52A expansion joints on the Viaduct prior to Roll-Out Roll-In operation. The assemblies consist of prefabricated and per-positioned bearing and masonry plates, and completed strip seals.

Phase 2: - Place all five deck panel plate assemblies in position across the joint opening.

- Adjust deck panel plates to achieve best fit with plan and profile.
- Fix panel height with use of the adjustment bolts.
- Ensure that the perimeter around the areas to be grouted are properly sealed.

Phase 3: - Inject fast setting grout under low pressure on both sliding side and fixed side.

- Install bolting on the fixed side as follows:
  1. Withdraw the plastic dowels from the holes once the grout has set enough to not flow.
  2. Field drill through the opened hole into the top plate of the bolt box below.
  3. Insert and tighten the bolts using the neoprene washer assemblies and lock nuts.
  4. Complete all bolts on the fixed side

Phase 4: - After the grout has achieved initial set, extract the assembly bolts and fill the holes with sealant.

- Remove the adjustment bolts and fill the holes with sealant.
- Place joint filler strip elements on each side of the expansion joint assemblies.
- Place remainder of overlay on each side of the expansion joints feathering to the finished pavement.
- Place silicone seal between deck panel plates.
- Clean up.

Notes:

1. Construction sequence shown for the Bent 52A expansion joint in the upper deck with traffic towards San Francisco. Construction sequence for the Bent 52A expansion joint in the lower deck with traffic in direction of Oakland similar.
2. Deck panel plate assemblies weight, including bearing and masonry plates and strip seals is approximately between 7.0 tons and 8.5 tons.
3. To expedite the construction sequence and to maximize efficiency, the Contractor shall provide separate work teams, fully equipped with personnel and equipment, dedicated for each expansion joint location.
4. The Contractor to provide temporary bridges to allow equipment to cross joints during bedding material curing time without loading the expansion joint plates.

CONTRACT NO. 04-0120R4

CONTRACT CHANGE ORDER NO 144

SHEET 24 OF 30

CONSTRUCTION SEQUENCE

Expansion Joint at Bent 52A

DIST	COUNTY	ROUTE	KILOMETER POST TOTAL PROJECT	SHEET NO	TOTAL
04	SF	80	12.5/13.2		

Caltrans Metric

REGISTERED CIVIL ENGINEER

5-12-08

PLANS APPROVAL DATE

The State of California or its officers or agents shall not be responsible for the accuracy or completeness of electronic copies of this plan sheet.

REGISTERED PROFESSIONAL ENGINEER Charles Redfield No. C 27605 Exp. 12/31/09 CIVIL STATE OF CALIFORNIA

T.Y. LIN / MOFFATT & NICHOL
Two Harrison Street, Suite 300
San Francisco, CA 94105

100% PS&E

ALL DIMENSIONS ARE IN MILLIMETERS UNLESS OTHERWISE SHOWN

SAN FRANCISCO OAKLAND BAY BRIDGE
EAST SPAN SEISMIC SAFETY PROJECT

EAST TIE-IN

BENT 52A EXPANSION JOINT DETAILS NO. 6

T. Ostrom/M. Whiteside/A. Akinsanya

DESIGN OVERSIGHT

SIGN OFF DATE

DESIGN DETAIL SHEET (METRIC) REV. 3/1/98
DATE ■ TIME ■ Pen Table File

DESIGN BY C. Redfield, R. Nutt — CHECKED S. Cheng
DETAILS BY [illegible] — CHECKED [illegible]
QUANTITIES BY N. Nelson — CHECKED A. Lee

ORIGINAL SCALE IN MILLIMETERS FOR REDUCED PLANS 0 10 20 30 40 50 60 70 80 90 100

PREPARED FOR THE STATE OF CALIFORNIA DEPARTMENT OF TRANSPORTATION

M. Soh
PROJECT ENGINEER
PROJECT MANAGER

BRIDGE NO. 34-0006 (TEMP)
PM/METER POST 12.6

CU
EA 0120R4

DISREGARD PRINTS BEARING EARLIER REVISION DATES

REVISION DATES (PRELIMINARY STAGE ONLY)

SHEET 96 OF 214

FILE => p:\ab\04-0120R1\eti\dgn\akbwjd06.dgn

DATE PLOTTED => 5/9/2008

CONTRACT NO. 04-012024

CONTRACT CHANGE ORDER NO 144

SHEET 25 OF 36

LEGEND:

Indicates steel deck plate V-grooves at ±45°

Indicates existing structure

Notes:

1. The Contractor shall verify all controlling field dimensions before ordering or fabricating any material.
2. For Sections A-A and B-B, see "Pier E1 Expansion Joint Details No. 1" and "Pier E1 Expansion Joint Details No. 3" sheets, respectively.
3. For barrier expansion joint and cover ℄ details, see "Pier E1 Expansion Joint Barrier" sheets.

DIST	COUNTY	ROUTE	KILOMETER POST TOTAL PROJECT	SHEET NO.	TOTAL
04	SF	80	12.5/13.2		

REGISTERED CIVIL ENGINEER

5-12-08

PLANS APPROVAL DATE

The State of California or its officers or agents shall not be responsible for the accuracy or completeness of electronic copies of this plan sheet.

REGISTERED PROFESSIONAL ENGINEER Charles Redfield No. C 27605 Exp. 12/31/09 CIVIL STATE OF CALIFORNIA

T.Y. LIN / MOFFATT & NICHOL
Two Harrison Street, Suite 300
San Francisco, CA 94105

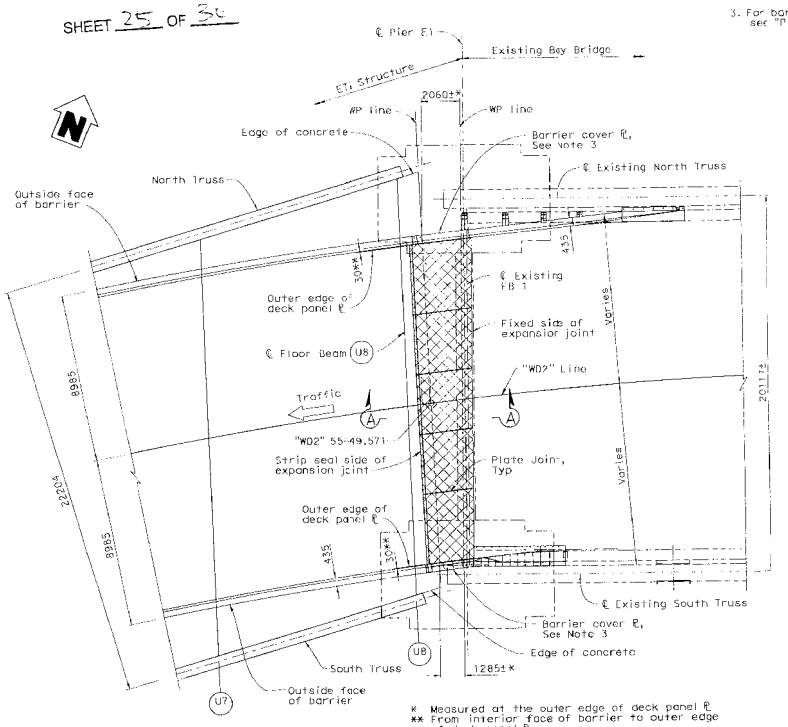

* Measured at the outer edge of deck panel ℄
** From interior face of barrier to outer edge of deck panel ℄

PLAN EXPANSION JOINT UPPER DECK

1:100

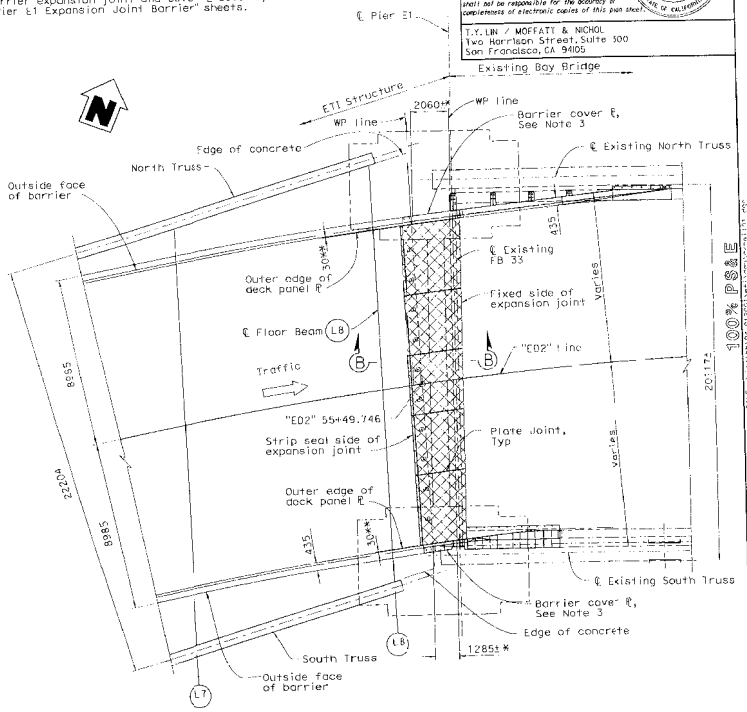

PLAN EXPANSION JOINT LOWER DECK

1:100

100% PS&E

ALL DIMENSIONS ARE IN MILLIMETERS UNLESS OTHERWISE SHOWN

SAN FRANCISCO OAKLAND BAY BRIDGE
EAST SPAN SEISMIC SAFETY PROJECT

EAST TIE-IN

PIER E1 EXPANSION JOINT LAYOUT

T. Ostrom/M. Whiteside/A. Akinsanya

DESIGN OVERSIGHT

SIGN CTR DATE

DESIGN DETAIL SHEET (METRIC) REV. 3/1/99
DATE# TIME# Pen Table File

DESIGN BY C. Redfield, R. Nutt CHECKED S. Cheng

QUANTITIES BY H. Nelson CHECKED A. Lee

ORIGINAL SCALE IN MILLIMETERS FOR REDUCED PLANS 0 10 20 30 40 50 60 70 80 90 100

PREPARED FOR THE STATE OF CALIFORNIA DEPARTMENT OF TRANSPORTATION

M. Sah
PROJECT ENGINEER
PROJECT MANAGER

CU
EA 012024

BRIDGE NO. 34-0006 (TEMP)
KILOMETER POST 12.6

DISREGARD PRINTS BEARING EARLIER REVISION DATES

REVISION DATES (MM/DD/YY) STAMP ONLY

SHEET 99 OF 214

FILE => p:\bb\04-012001\eti\dgn\dkpie101.dgn

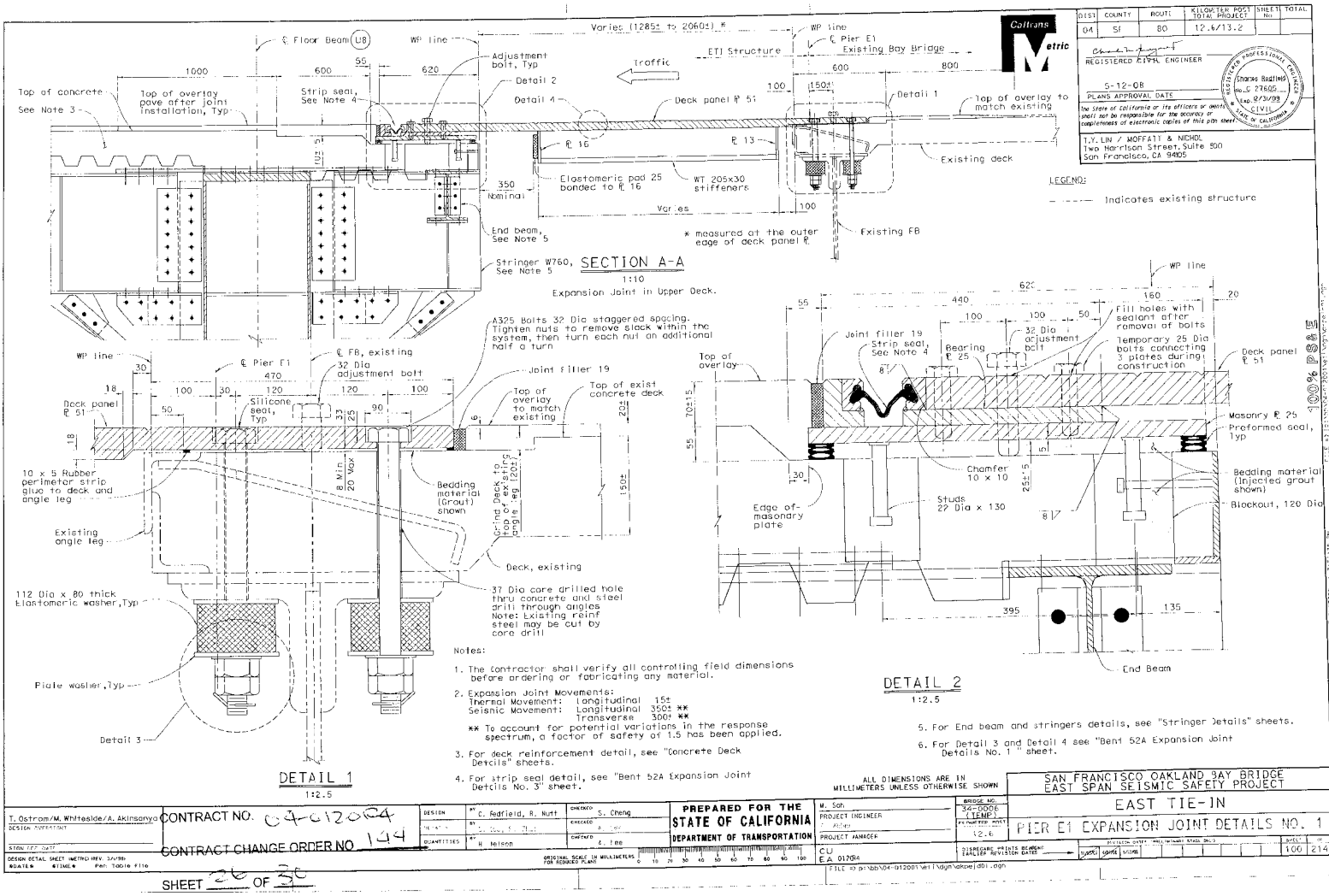

Notes:

1. The contractor shall verify all controlling field dimensions before ordering or fabricating any material.
2. Expansion Joint Movements:
   Thermal Movement: Longitudinal 15±
   Seismic Movement: Longitudinal 350± **
   Transverse 300± **
   ** To account for potential variations in the response spectrum, a factor of safety of 1.5 has been applied.
3. For deck reinforcement detail, see "Concrete Deck Details" sheets.
4. For strip seal detail, see "Bent 52A Expansion Joint Details No. 3" sheet.
5. For End beam and stringers details, see "Stringer Details" sheets.
6. For Detail 3 and Detail 4 see "Bent 52A Expansion Joint Details No. 1" sheet.

LEGEND:

- - - - - Indicates existing structure

DIST	COUNTY	ROUTE	KILOMETER POST TOTAL PROJECT	SHEET No.	TOTAL
04	SF	80	12.6/13.2		

Caltrans Metric

REGISTERED CIVIL ENGINEER

5-12-08
PLANS APPROVAL DATE

The State of California or its officers or agents shall not be responsible for the accuracy or completeness of electronic copies of this plan sheet.

Thomas Redfield No. C 27605 Exp. 9/31/09 CIVIL STATE OF CALIFORNIA

T.Y. LIN / MOFFATT & NICHOL
Two Harrison Street, Suite 500
San Francisco, CA 94105

ALL DIMENSIONS ARE IN MILLIMETERS UNLESS OTHERWISE SHOWN

SAN FRANCISCO OAKLAND BAY BRIDGE
EAST SPAN SEISMIC SAFETY PROJECT

EAST TIE-IN

PIER E1 EXPANSION JOINT DETAILS NO. 1

T. Ostrom/M. Whitesides/A. Akinsanya	CONTRACT NO. 04-012004	DESIGN	C. Redfield, R. Nutt
DESIGN SUPERVISOR	CONTRACT CHANGE ORDER NO. 144	DETAILS	
		QUANTITIES	H. Nelson
		CHECKED	S. Cheng
		CHECKED	A. Lee

PREPARED FOR THE STATE OF CALIFORNIA
DEPARTMENT OF TRANSPORTATION

M. Soh
PROJECT ENGINEER
PROJECT MANAGER

BRIDGE NO. 34-0006 (TEMP.)
ENGINEER'S PACKET NO. 12.6

CU
E.A. 012004
FILE => p:\bb\04-012001\e1f\dgn\akbed01.dgn

DESIGN DETAIL SHEET (METRIC) REV. 3/4/98
DGN/E# #TIME# Per Table File

ORIGINAL SCALE IN MILLIMETERS FOR REDUCED PLANS 0 10 20 30 40 50 60 70 80 90 100

DISREGARD PRINTS BEARING EARLIER REVISION DATES

REVISION DATE	INITIAL	INITIAL	STATE	FED. AID PROJ. NO.
			100	214

SHEET 26 OF 36

DATE PLOTTED => 5-9-2008

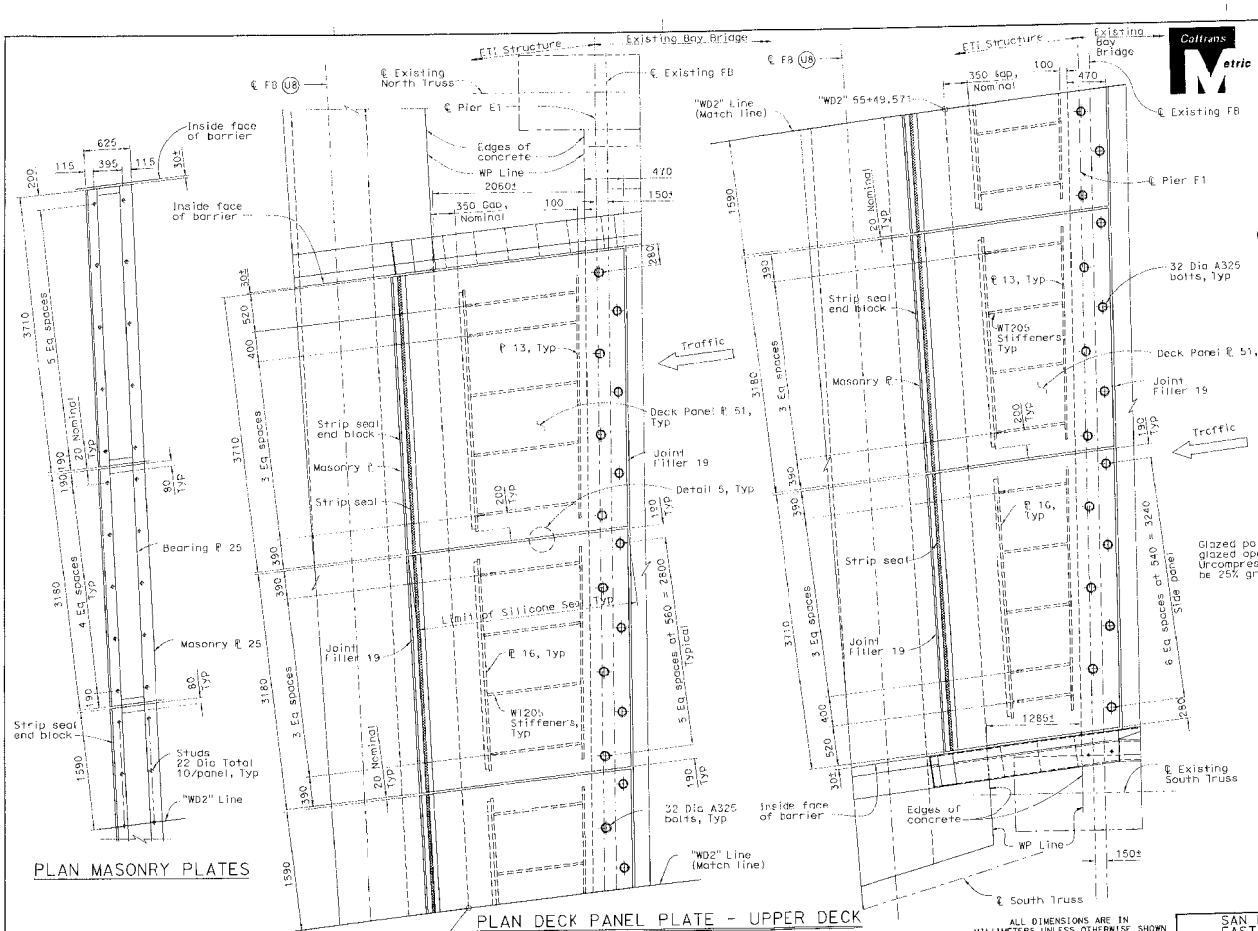

PLAN MASONRY PLATES

PLAN DECK PANEL PLATE - UPPER DECK

1:25 Gap not drawn to scale

ALL DIMENSIONS ARE IN MILLIMETERS UNLESS OTHERWISE SHOWN

DIST	COUNTY	ROUTE	KILOMETER POST TOTAL PROJECT	SHEET No	TOTAL
04	SF	80	12.6/13.2		

Caltrans Metric

REGISTERED CIVIL ENGINEER

5-12-08

PLANS APPROVAL DATE

The State of California or its officers or agents shall not be responsible for the accuracy or completeness of electronic copies of this plan sheet.

REGISTERED PROFESSIONAL ENGINEER Charles Redfield No. C 27605 Exp. 12/31/09 CIVIL STATE OF CALIFORNIA

T.Y. LIN / MOFFATT & NICHOL
Two Harrison Street, Suite 500
San Francisco, CA 94105

CONTRACT NO. 04-0120R4

CONTRACT CHANGE ORDER NO 144

SHEET 27 OF 30

Silicone Seal

20± Gap

6 max

Glazed polyethylene foam or glazed open cell backer rod. Uncompressed width/dia to be 25% greater than actual gap.

DETAIL 5

NTS

LEGEND:

Indicates existing structure

Notes:

1. The Contractor shall verify all controlling field dimensions before ordering or fabricating any material.
2. Dimensions are given parallel to or perpendicular to "WD2" Line.
3. The stringers are not shown for clarity.
4. Direction of thermal movement.

9°25' Movement "WD2" Line

100% PS&E

SAN FRANCISCO OAKLAND BAY BRIDGE
EAST SPAN SEISMIC SAFETY PROJECT

EAST TIE-IN

PIER E1 EXPANSION JOINT DETAILS NO. 2

T. Ostrom/M. Whiteside/A. Akinsanya
DESIGN OVERSIGHT

DESIGN DETAIL SHEET (METRIC) REV. 3/1/99
DATE TIME Pen Table File

DESIGN BY C. Redfield, R. Nutt — CHECKED S. Cheng
DETAILS BY — CHECKED
QUANTITIES BY M. Nelson — CHECKED A. Lee

PREPARED FOR THE STATE OF CALIFORNIA DEPARTMENT OF TRANSPORTATION

M. Soh
PROJECT ENGINEER
PROJECT MANAGER

BRIDGE NO. 34-0006 (TEMP)
KILOMETER POST 12.6

CU
EA 0120R4

ORIGINAL SCALE IN MILLIMETERS FOR REDUCED PLANS 0 10 20 30 40 50 60 70 80 90 100

SIGNATURE PRINTS BLANKING EARLIER REVISION DATES

REVISION DATES (PRELIMINARY STAGE ONLY)

SHEET 101 OF 214

FILE => p:\bb\04-0120R4\eti\dgn\dkpe\d02.dgn

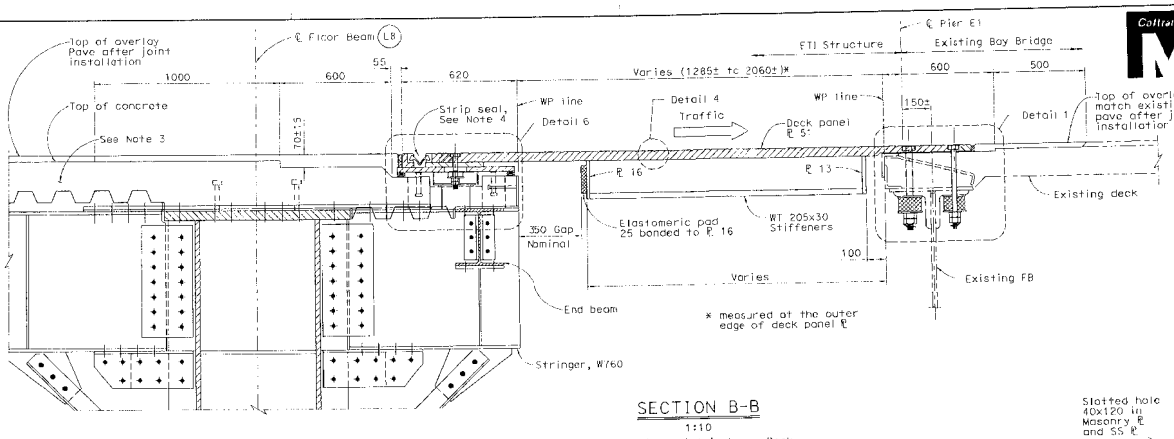

SECTION B-B

1:10

Expansion Joint in Lower Deck.

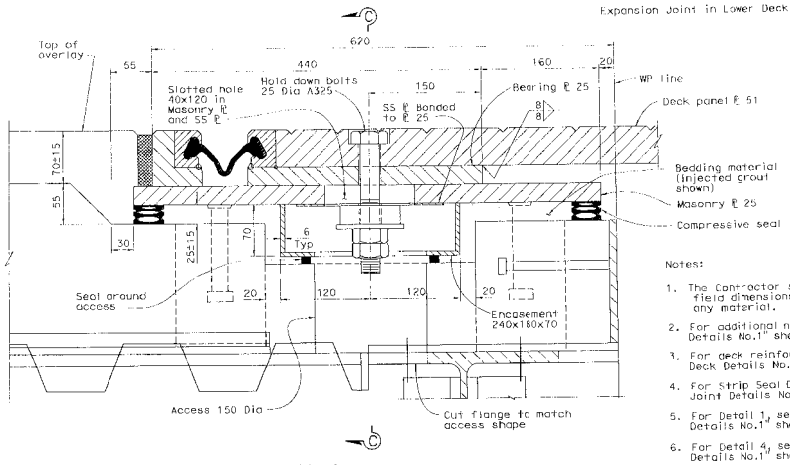

DETAIL 6

1:2.5

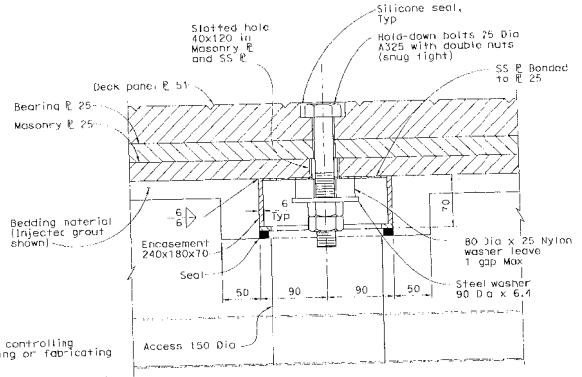

SECTION C-C

1:2.5

Notes:

1. The Contractor shall verify all controlling field dimensions before ordering or fabricating any material.
2. For additional notes, see "Pier E1 Expansion Joint Details No.1" sheet.
3. For deck reinforcement details see "Concrete Deck Details No. 2" sheet.
4. For Strip Seal Detail, see "Bent 52A Expansion Joint Details No. 3" sheet.
5. For Detail 1, see "Pier E1 Expansion Joint Details No.1" sheet.
6. For Detail 4, see "Bent 52A Expansion Joint Details No.1" sheet.

ALL DIMENSIONS ARE IN MILLIMETERS UNLESS OTHERWISE SHOWN

DIST	COUNTY	ROUTE	KILOMETER POST TOTAL PROJECT	SHEET NO.	TOTAL
04	SF	80	12.6/13.2		

Caltrans Metric

REGISTERED CIVIL ENGINEER

5-12-08
PLANS APPROVAL DATE

Gregory Rodfield No. C 21605 (Exp. 12/31/09) CIVIL STATE OF CALIFORNIA

The State of California or its officers or agents shall not be responsible for the accuracy or completeness of electronic copies of this plan sheet.

T.Y. LIN / MOFFATT & NICHOL
Two Harrison Street, Suite 500
San Francisco, CA 94105

LEGEND:

——·—·—· Indicates existing structure

CONTRACT NO. 04-012004

CONTRACT CHANGE ORDER NO 144

SHEET 28 OF 30

SAN FRANCISCO OAKLAND BAY BRIDGE
EAST SPAN SEISMIC SAFETY PROJECT

EAST TIE-IN

PIER E1 EXPANSION JOINT DETAILS NO. 3

T. Ostrom/M. Whitesides/A. Akinsanya	DESIGN	BY C. Fedfield, R. Nutt	CHECKED S. Cheng	PREPARED FOR THE STATE OF CALIFORNIA DEPARTMENT OF TRANSPORTATION	M. Soh PROJECT ENGINEER
	DETAILS	BY	CHECKED		S. Shaw PROJECT MANAGER
	QUANTITIES	BY H. Brison	CHECKED A. Lee		CU EA 012004

BRIDGE NO. 34-0006 (TEMP.)
KILOMETER POST 12.6

DESIGN DETAIL SHEET (METRIC) REV. 3/4/98
MCAD# #TIME# Pen Table File

ORIGINAL SCALE IN MILLIMETERS FOR REDUCED PLANS 0 10 20 30 40 50 60 70 80 90 100

DISREGARD PRINTS BEARING EARLIER REVISION DATES

REVISION DATES (PRELIMINARY ENGR ONLY) | DATE | BY

DATE PLOTTED => 5-APR-2008 13:56:42

TITLE -> d:\bb\04-012004\e1\dgn\w-pej03.dgn

USER NAME => ALAN

100% PS&E

DRAWING NO. 102
SHEET NO. 214

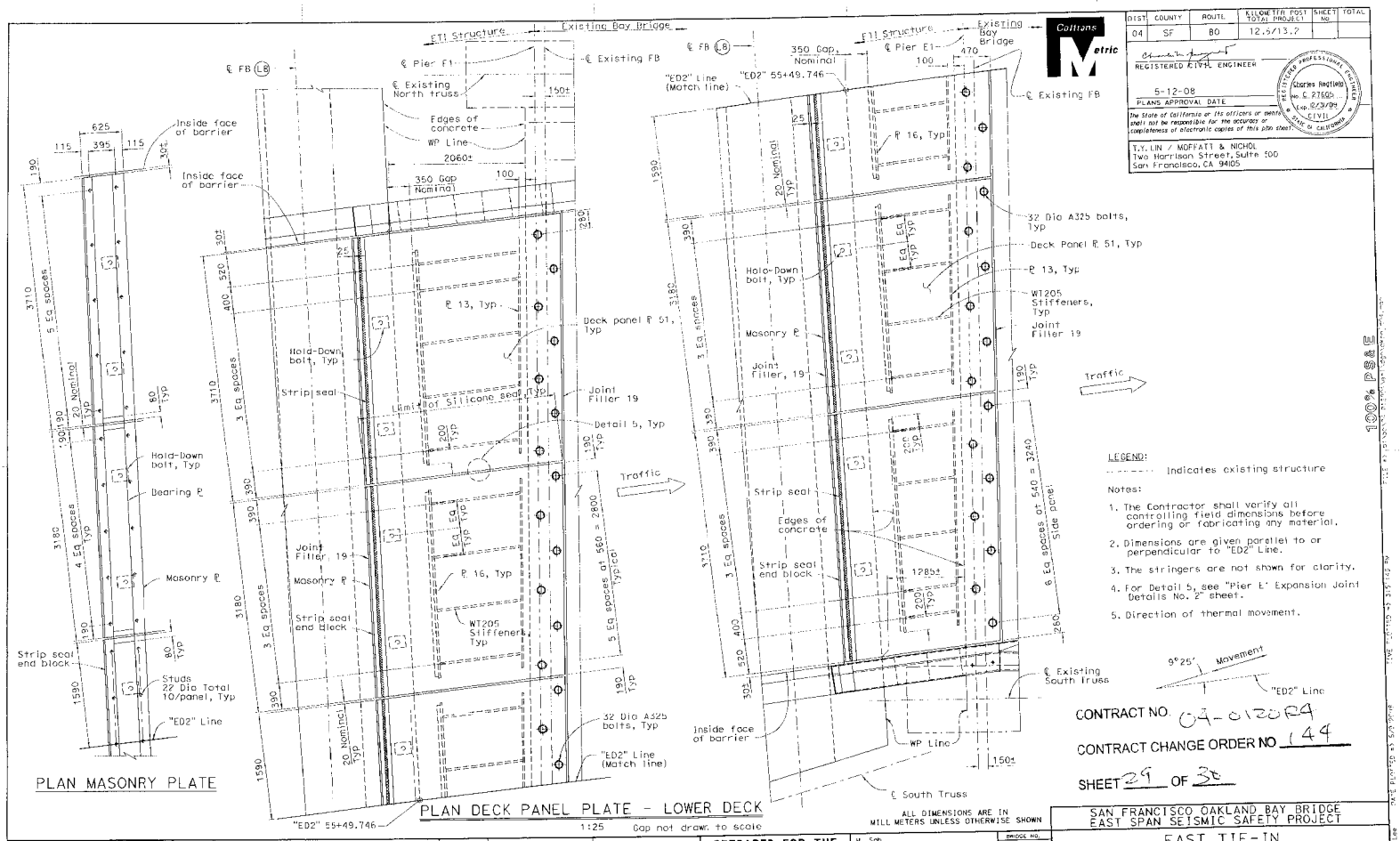

PLAN MASONRY PLATE

PLAN DECK PANEL PLATE - LOWER DECK

1:25 Gap not drawn to scale

ALL DIMENSIONS ARE IN MILLIMETERS UNLESS OTHERWISE SHOWN

DIST	COUNTY	ROUTE	KILOMETER POST TOTAL PROJECT	SHEET NO.	TOTAL
04	SF	80	12.5/13.7		

REGISTERED CIVIL ENGINEER

5-12-08
PLANS APPROVAL DATE

Charles Nagtalon No. C 27605 Exp. 6/30/09 CIVIL STATE OF CALIFORNIA

The State of California or its officers or agents shall not be responsible for the accuracy or completeness of electronic copies of this plan sheet.

T.Y. LIN / MOFFATT & NICHOL
Two Harrison Street, Suite 500
San Francisco, CA 94105

100% PS&E

CONTRACT NO. 04-0120R4

CONTRACT CHANGE ORDER NO. 144

SHEET 29 OF 30

SAN FRANCISCO OAKLAND BAY BRIDGE
EAST SPAN SEISMIC SAFETY PROJECT

EAST TIE-IN

PIER E1 EXPANSION JOINT DETAILS NO. 4

T. Ostrom/M. Whiteside/A. Akinsanya	DESIGN BY C. Radfield, A. Nutt	CHECKED S. Cheng	PREPARED FOR THE STATE OF CALIFORNIA DEPARTMENT OF TRANSPORTATION
DESIGN OVERSIGHT	DETAILS BY	CHECKED	
STICK OFF DATE	QUANTITIES BY H. Nelson	CHECKED A. Lee	

M. Soh, PROJECT ENGINEER
C. Addiss, PROJECT MANAGER
CU
EA 012014

BRIDGE NO. 34-0006 (TEMP)
KILOMETER POST 12.6

DISREGARD PRINTS DATED: NO EARLIER REVISION DATE!

REVISION DATES (PRELIMINARY STAGE ONLY)
10-09-07 | 12-06-07 | 1-08-08 | 1-25-08 | 3-10-08 | 5-12-08

SHEET 103 OF 214

DESIGN DETAIL SHEET (METRIC) (rev. 3/1/99)
MDATE= PTIME= Plan Table File

ORIGINAL SCALE IN MILLIMETERS FOR REDUCED PLANS 0 10 20 30 40 50 60 70 80 90 100

FILE = e:\pw\bd04c12001\sti\dgn\ampoj04.dgn

USERNAME = ALEE

DIST	COUNTY	ROUTE	KILOMETER POST TOTAL PROJECT	SHEET NO	TOTAL
04	SF	80	12.6/13.2		

REGISTERED CIVIL ENGINEER

5-12-08
PLANS APPROVAL DATE

The State of California or its officers or agents shall not be responsible for the accuracy or completeness of electronic copies of this plan sheet.

Charles Rastad No. C 27605 Exp. 12/31/09 CIVIL STATE OF CALIFORNIA

T.Y. LIN / MOFFATT & NICHOL
Two Harrison Street, Suite 500
San Francisco, CA 94105

SLIDING SIDE ET1 STRUCTURE

FIXED SIDE EXISTING BAY BRIDGE

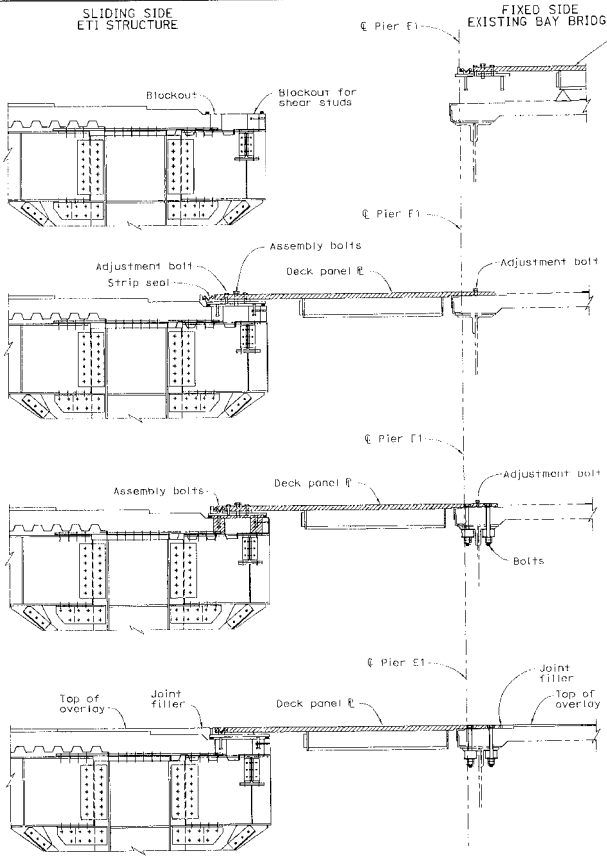

Note: Sequence shown for use of injected grout as bedding material.

Phase 1: - Joint situation at completion of Roll-in operation.
1. Deck on sliding side prepared with blockouts to receive the masonry plate and the vertical shear studs.
2. Existing expansion joint has been removed with roll-out of existing YBA span.
3. Expose concrete surface or the fixed side, cut back asphalt overlay and concrete surface.
   a. Strip seal end block welded to masonry plate. Set correct gap for anticipated installation temperatures.
   b. Strip seals installed in each individual plate assembly
4. Place deck panel plate assemblies for the Pier E1 expansion joint on the existing cantilever span side prior to Roll-Out-Roll-In operation. The assemblies consist of prefabricated and pre-positioned bearing and masonry plates and completed strip seals.

Phase 2: - Place leveling grout on the fixed side.
- Place excess thickness of grout as approved by the Engineer.
- Place all five deck panel assemblies in positon across joint opening. Lower the plates into the grout on the fixed side with adjustment bolts.
- Adjust deck panel plates to achieve best fit with plan and profile.
- Fix panel height on the sliding side with use of the adjustment bolts.
- Ensure that the perimeter around the areas to be grouted are properly sealed.

Phase 3: - Inject fast setting grout under low pressure on the sliding side.
- Install bolting on the fixed side as follows:
1. Withdraw the plastic dowels from the holes, once the grout has set enough to not flow.
2. Field drill through the holes into the existing concrete deck and flange angle below.
3. Insert and tighten the Tie-down bolts using the neoprene washer assemblies and lock nuts.
4. Complete all bolts on the fixed side. (Total 32 bolts per expansion joint)

Phase 4: - After the grout has achieved initial set, extract the assembly bolts and fill holes with sealant.
- Remove the adjustment bolts and fill holes with sealant.
- Place joint filler strip elements on each side of the expansion joint assemblies.
- Place remainder of overlay on each side of the expansion joints feathering to the finished pavement.
- Place silicone seal between deck panel plates.
- Clean up.

CONTRACT NO. 04-012024

CONTRACT CHANGE ORDER NO. 144

SHEET 30 OF 32

Notes:

1. Construction sequence shown for the Pier E1 expansion joint in the upper deck with traffic towards San Francisco. Construction sequence for the Pier E1 expansion joint in the lower deck with traffic towards Oakland, similar.
2. Deck panel assembly weight, including bearing and masonary plates, strip seals and stiffeners is approximately between 5.0 tons and 6.0 tons.
3. To expedite the construction sequence and to maximize efficiency, the Contractor shall provide separate work teams, fully equipped with personnel and equipment, dedicated for each expansion joint location.
4. The Contractor to provide temporary bridges to allow equipment to cross during bedding material curing time without loading the expansion joint plates.

CONSTRUCTION SEQUENCE

Expansion Joint at Pier E1
NTS

ALL DIMENSIONS ARE IN MILLIMETERS UNLESS OTHERWISE SHOWN

SAN FRANCISCO OAKLAND BAY BRIDGE
EAST SPAN SEISMIC SAFETY PROJECT

EAST TIE-IN

PIER E1 EXPANSION JOINT DETAILS NO. 5

T. Ostrom/M. Whiteside/A. Akinsanya	DESIGN	BY C. Redfield, R. Nutt	CHECKED S. Cheng
DESIGN OVERSIGHT	DETAILS	BY	CHECKED S. Tan
SIGN OFF DATE	QUANTITIES	BY H. Nelson	CHECKED A. Lee

PREPARED FOR THE STATE OF CALIFORNIA DEPARTMENT OF TRANSPORTATION

M. Soh — PROJECT ENGINEER
S. Allos — PROJECT MANAGER

BRIDGE NO. 34-0008 (TEMP)
EXPANDED POST MILE 12.6

CU
EA 012024

DESIGN DETAIL SHEET (ATHCHK) REV. 3/4/98
DATE= TIME= Pen Table File

ORIGINAL SCALE IN MILLIMETERS FOR REDUCED PLANS 0 10 20 30 40 50 60 70 80 90 100

DISREGARD PRINTS BEARING EARLIER REVISION DATES

REVISION DATE (YEAR ULTIMATE STAMP ONLY)						
11/2008	10/2008	3/2008				

SHEET NO. 104 OF 214

FILE => p:\od\04-012001\set1\sgn\dkpej05.sgn

DATE PLOTTED => 13-NOV-2008 14:48
TIME PLOTTED => 13:57:08

CONTRACT CHANGE ORDER

Change Requested by: Engineer

CCO 144	Suppl. No. 1	Contract No. 04 - 0120R4	Road SF-80-12.6/13.2	FED. AID LOC.: ACBRIM-080-1(097)N

To: **CC MYERS INC**

You are directed to make the following changes from the plans and specifications or do the following described work not included in the plans and specifications for this contract. ***NOTE: This change order is not effective until approved by the Engineer.***

Description of work to be done, estimate of quantities and prices to be paid. (Segregate between additional work at contract price, agreed price and force account.) Unless otherwise stated, rates for rental of equipment cover only such time as equipment is actually used and no allowance will be made for idle time. This last percentage shown is the net accumulated increase or decrease from the original quantity in the Engineer's Estimate.

Extra Work at Force Account:

Furnish, fabricate, machine, prime paint, and deliver to the project site, East Tie In expansion joints in accordance with the plans and specifications dated May 12, 2008 included herein (Sheets 2 through 23).

Payment for this work shall be in accordance with Sections 4-1.03D, Extra Work, and 9-1.03, Force Account Payment, of the Standard Specifications.

Compensation for delays resulting from this work will be made in accordance with Section 8-1.09 "Right of Way Delays" of the Standard Specifications and Section 10-1.20 "Time Related Overhead" of the Special Provisions.

Consideration of a time adjustment will be deferred until completion of the work specified herein. Determination of a commensurate time extension will be made in accordance with Section 8-1.07, "Liquidated Damages", of the Standard Specifications.

Estimated Cost of Extra Work at Force Account $2,900,000.00

Estimated Cost: **Increase** ☑ **Decrease** ☐ **$2,900,000.00**

By reason of this order the time of completion will be adjusted as follows: Deferred

Submitted by

Signature	Resident Engineer	Date
	BILL CASEY	1-30-09

Approval Recommended by

Signature	SFOBB Construction Manager	Date
Mike Forner	MIKE FORNER	2-2-09

Engineer Approval by

Signature	SFOBB Construction Manager	Date
Michael Forner	MIKE FORNER	4-6-09

We the undersigned contractor, have given careful consideration to the change proposed and agree, if this proposal is approved, that we will provide all equipment, furnish the materials, except as may otherwise be noted above, and perform all services necessary for the work above specified, and will accept as full payment therefor the prices shown above.

NOTE: If you, the contractor, do not sign acceptance of this order, your attention is directed to the requirements of the specifications as to proceeding with the ordered work and filing a written protest within the time therein specified.

Contractor Acceptance by

Signature	(Print name and title)	Date
D E Hamick	DANIEL E. HAMICK, PRESIDENT	3/10/09

SFOBB TEMPORARY BYPASS STRUCTURE

EAST TIE-IN SEGMENT
ROLL – OUT ROLL – IN

100% SUPERSTRUCTURE SPECIFICATIONS
(Expansion Joint Specifications Only)

BRIDGE NO. 34-0006 (TEMP)

Location: 04-SF-80-12.6/13.2
EA No.: 0120R4

Project Title: South/South Detour – San Francisco-Oakland Bay Bridge
Project No.: 1295

Volume 1 of 1

May 12, 2008

CONTRACT NO. 04-0120R4

CONTRACT CHANGE ORDER NO 144-S1

SHEET 2 OF 23

CONTRACT NO. 04-0120R4

The special provisions contained herein have been prepared by or under the direction of the following Registered Persons.

STRUCTURES

REGISTERED CIVIL ENGINEER

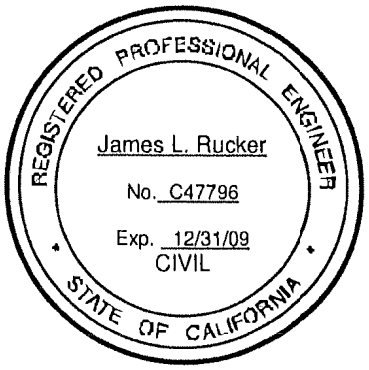

CONTRACT NO. 04-0120R4

CONTRACT CHANGE ORDER NO 144-S1

SHEET 3 OF 23

TABLE OF CONTENTS

TABLE OF CONTENTS 2
WORKING DRAWINGS 3
MATERIALS 4
MOCK UP 5
FABRICATION 6
INSTALLATION 7
MEASUREMENT AND PAYMENT 7

CONTRACT NO. 04-0120R4

CONTRACT CHANGE ORDER NO 144-S1

SHEET 9 OF 23

10-1.__ EXPANSION JOINT

Expansion joints shall consist of steel deck plates, bolt boxes, support plates, sealing elements, bedding material, anchorage components and all other necessary components and shall be fabricated and installed in conformance with the details shown on the plans and as specified in the standard specifications and these special provisions.

Attention is directed to "Cooperation," of these special provisions.

Unless otherwise directed by the Engineer, prior to submitting working drawings, the Contractor shall inspect and report on the expansion joint locations in the structures adjacent to East Tie-In. The Contractor shall submit to the Engineer an inspection report for review and approval. This inspection report shall be titled "East Tie-In Expansion Joint Location Inspection Report" and shall describe the actual dimensions and details existing in these areas sufficiently to determine if any conflicts or mismatches exist that would require revision to the design and/or details of the expansion joints and/or the installation procedures. The report shall include recommendations to resolve any such issues. The Contractor shall allow the Engineer 10 days to review the "East Tie-In Expansion Joint Locations Inspection Report".

WORKING DRAWINGS

The Contractor shall submit working drawings in conformance with the provisions in "Working Drawings" of these special provisions, and the requirements specified herein.

Working drawings shall include complete details, information, and drawings of the expansion joints and anchorage components and the method, materials, equipment, and procedures for fabrication and installation that the Contractor proposes to use.

Working drawing submittals shall include the following:

A. Fabrication plans including all details, elevations, and sections of the expansion joint. All dimensions and design and installation tolerances shall be specified. Fabrication plans for the sizes of deck plates and support plates shall consider roadway super elevations and longitudinal gaps between the plates for sealing elements. Unless otherwise directed by the Engineer, fabrication plans shall take into full account all issues identified in the "East Tie-In Expansion Joint Locations Inspection Report."
B. All ASTM or other material designations.
C. Sections showing all materials comprising the expansion joint with complete details of all individual components including welded splices and connections, welding procedures, and the measures to be taken to prevent steel plate from distortion due to the heat of welding.
D. Joint installation plans including methods, materials, equipment, sequence, lifting attachments and locations, details of temporary anchorage during setting, temperature adjustment methods, method for maintaining full contact between deck plates and support plates during and after installation, installation details at curbs, seal installation details, and other procedures that the Contractor proposes to use for installation of the expansion joints including procedures to release restraint after initial set of the bedding material.
E. Bedding material selection, bedding material technical information, the results of any testing necessary to ensure that working time of the material will be adequate and that strength gain will be sufficiently rapid, and placement and material testing procedures.

CONTRACT NO. 04-512084
CONTRACT CHANGE ORDER NO 149-S1
SHEET 5 OF 23

F. Details and procedures of the mock-up construction to demonstrate that the expansion joint can be installed in the field within the scheduled duration submitted by the Contractor in the Roll-out Roll-in plan and to provide training for the Contractor's personnel in the installation procedures.
G. List of coating system for expansion joints identifying cleaning and painting of all steel components as specified in "Clean and Paint Structural Steel" of these special provisions.
H. Anchorage components including concrete blockout details.
I. Storage plans for manufacture storage, interim storage, and on-site storage details including temporary support for the expansion joints.
J. Shipping plans including handling of the expansion joints during transportation. Each shipment of the expansion joint materials shall be accompanied by a Certificate of Compliance in conformance with the provisions in Section 6-1.07, "Certificates of Compliance," of the Standard Specifications. The certificate shall state that the materials and fabrication involved comply in all respects to the specifications and data submitted in obtaining approval.

After complete working drawings are received by the Engineer, the Contractor shall allow the Engineer 20 working days to review the submittal. No fabrication of the expansion joint shall begin until complete working drawings are reviewed and approved, in writing, by the Engineer.

MATERIALS

Attention is directed to "Welding" and "Audits" of these special provisions. Welding of expansion joint shall conform to AWS D1.5.

Structural steel shall conform to "Steel Structures" of these special provisions. Structural steel shall conform to the requirements of ASTM Designation: A 709M, Grade 345. Bolts, nuts and washers shall conform to the requirements of ASTM Designation: A 325 or A 325M and Section 75-1.03, "Miscellaneous Bridge Metal," of the Standard Specifications.

Sealing elements shall be 2 component silicone sealant that meets the requirements of Type A and AL seal in Section, 51-1.12F(3), "Materials and Installation," of the Standard Specifications. Strip seal shall be continuous without splices within the limits of each panel as shown on the plans.

Elastomeric washers shall conform to the requirements specified in Section 51-1.12H(1), "Plain and Fabric Reinforced Elastomeric Bearing Pads," of the standard specifications.

Bedding Material

The bedding material for setting the expansion joints shall be one of the following : epoxy plus silica sand mixture; rapid set mortar (without coarse aggregate); injectable rapid setting grout. The Contractor is to investigate and test materials to the degree necessary to ensure that the bedding material will perform as required and to allow the choice of bedding material to be made at least three months prior to the Roll-In operation. Contractor is to test all three material types and to provide a recommendation as to which he considers the most suitable. The determination of which material to use will be made by the Engineer after testing is complete.

Epoxy plus Silica Sand Mixture – to be a mixture of equal parts by volume of epoxy adhesive and silica sand. The material is to have adequate working time (pot life) to allow the expansion joint plates to be installed in the wet mixture with at least 30 minutes to spare before initial set. Tests are to be made to determine the time of initial set and the time at which a cube

CONTRACT NO. 54-012024
CONTRACT CHANGE ORDER NO 144-S1
SHEET 6 OF 23

strength of 25 MPa is achieved at the thicknesses of material anticipated and at the range of ambient temperatures expected. Contractor is to provide, if necessary, different epoxy formulations so as to cover the full range of conditions anticipated on site. The material is to achieve a compressive cube strength of at least 25 MPa before it bears traffic

Rapid Set Mortar (without coarse aggregate) – to be a rapid setting mortar using only fine aggregate. To be used at a "masonry mortar" consistency for setting the expansion joints into. The material is to have adequate working time to allow the expansion joint plates to be installed in the wet mixture with at least 30 minutes to spare before initial set. Tests are to be made to determine the time of initial set at the thicknesses of material anticipated and at the range of ambient temperatures expected. Different mixes are to be available if necessary to accommodate the full range of anticipated conditions. The material is to achieve a compressive cube strength of at least 25 MPa within 8 hours of initial set before it bears traffic.

Cementitious Grout – to be a cementitious grouting material containing fine aggregate and admixtures as necessary to ensure the required workability, flowability and early strength. Particular attention is to be paid to the suitability of the material at the maximum anticipated thickness. The material must be injectable at extremely low pressure (less than 1000 mm of head) through 19 mm diameter injection holes and must be capable of flowing freely under the embedded plates at the minimum anticipated thickness and producing 90% contact with the plate. Tests are to be made to determine the time of initial set and the time at which a cube strength of 25 MPa is achieved at the various thicknesses of material anticipated and at the range of ambient temperatures expected. Different mixes are to be available if necessary to accommodate the full range of anticipated conditions. The material is to achieve a compressive cube strength of at least 25 MPa before it bears traffic.

MOCK UP

Contractor shall construct at least one full scale mock-up prior to the commencement of fabrication of any of the expansion joints to demonstrate that the installation methods forseen are workable and that the expansion joints can be installed in the field within the time scheduled by the Contractor for the Roll-out Roll-in operation. The mock-up shall be witnessed by the Engineer. Upon completion of a successful mockup installation, fabrication of the joints may commence. At a later date the mockup is to be used to train the installation crews and to otherwise practice for the actual installation.

Further detailed mockups will also be required in order to test the effectiveness of the bedding materials and their proposed installation methods so that a final selection of bedding material can be made by the Engineer.

The full scale mock-up shall be of one full panel (approximately one lane wide) of one of the expansion joints. It shall use plates of the thicknesses shown on the plans but need not use the grade of steel specified for the actual joints. The replication of the blockout in the concrete on the sliding side is to have a depth and length equal to that of the blockout detailed on the plans and shall also incorporate cylindrical blockouts for the stud anchors. The replication of the blockout on the fixed side is to incorporate a steel plate arrangement to replicate the top plate of the bolt box shown on the plans. The mock-up shall include bedding material, seals etc. as necessary to permit the installation of the bedding material, concrete, adjustment bolts, temporary fixing bolts, and all concrete embedments as shown on the plans and approved working drawings. The mock-up shall be capable of being re-used as necessary to prove all aspects of the installation. Upon completion of a mockup and achievement of 25MPa cube strength, the mockup shall be dis-assembled and the adequacy of the bedding material verified.

CONTRACT NO. 04-012064

CONTRACT CHANGE ORDER NO 144 - S1

SHEET 7 OF 23

Acceptance criteria of the full scale mock-up shall be as follows:

A. Mock-up expansion joint is installed within horizontal and level tolerances allowed for the actual expansion joint.
B. Mock-up shall be completed in the scheduled duration.
C. Bedding material installation methods and bedding material condition are shown to be satisfactory

If the mock-up fails to meet any of the acceptance criteria as determined by the Engineer, additional mock-ups shall be constructed or the mockup shall be re-used until a satisfactory result is achieved.

Detailed mockups Detailed mockups shall be constructed to test the installation methods for the bedding material and to prove that the resulting in-situ bedding material is acceptable. These mockups are to be carried out at the earliest feasible date. The results of these mockups will be used to make a final determination of what bedding ,aterial to use in the project.

The first type of mockup shall consist of 1500 mm x 1000 mm steel plates 32 mm thick, with four leveling screws but without shear studs, that are to be set in bedding material in recesses in concrete at both the maximum and minimum anticipated bedding material thicknesses. The recesses are to have cylindrical blockouts replicating the blockouts for the shear studs. All three types of acceptable bedding materials are to be tested. Following achievement of a cube strength in the bedding material of 25 MPa, the mockup shall be disassembled and the quality of the bedding achieved determined.

The second type of mockup shall consist of 1500 mm x 540 mm x 32 thick plates with four leveling screws that are to be set on steel plates replicating the arrangement at the bolt boxes at the fixed end of the expansion joints. The mockups are to be carried out at maximum and minimum anticipated bedding material thicknesses and for all of the three potential bedding materials. Following achievement of a cube strength in the bedding material of 25 MPa, the mockup shall be disassembled and the quality of the bedding achieved determined.

The mock-ups shall not be part of the permanent structure and shall become the property of the Contractor. The mock-ups shall be removed from the work site and shall be disposed of in conformance with the provisions in Section 7-1.13, "Disposal of Material Outside the Highway Right of Way," of the Standard Specifications.

FABRICATION

The expansion joint shall be fabricated in conformance with the details, dimensions, material specifications, and procedures shown in the approved working drawings.

At the time of installation, the surface of the bearing plate shall be in contact with the surface of the masonry plate such that no gap between the two plates exceeds 2.0 mm and such that the maximum distance between points of contact does not exceed 300 mm. The Contractor shall furnish sufficient temporary assembly bolts to ensure that this fit is achieved.

All plate welds shall be ground smooth. The welds shall not protrude into the sliding surface of the deck plates or support plates.

Cleaning and painting of all new metal surfaces of the expansion joints, except where embedded in concrete, shall conform to the requirements specified in "Clean and Paint Structural Steel" of these special provisions.

Damage to the expansion joint during shipping or handling shall be cause for rejection of the expansion joint.

Damage to the corrosion protection system shall be repaired to the satisfaction of the Engineer prior to installation.

INSTALLATION

Each expansion joint shall be installed in accordance with the approved working drawings.

The expansion joint segments shall be installed in such a manner as to produce a best fit road profile across each joint. To achieve this, the thickness of the bedding material may be varied within the range shown on the Contract Plans and the thickness of the adjacent overlay at each end of each joint is also to be adjusted to blend with the pavement surfaces existing at the time of Roll In. Best fit to the theoretical profile is to be determined on site when the survey is made and confiormed when the expansion joint plates are first installed and prior to the installation of the bedding material.

In order to determine best fit, the Contractor is to survey profiles along the edge of each plate once the ETI span is installed and set on bearings (permanent or temporary). The profiles shall be surveyed at 2 meter intervals extending at least 8 meters each side of each joint plate. The profiles are to be compared to the theoretical profiles in each case. Best fit is to be proposed by the Contractor based on this survey and is to be accepted by the Engineer (who will be on site at this time) before the installation of the bedding material is commenced.

The Contractor shall protect the expansion joint from damage. The Contractor shall protect concrete blockouts and support systems from damage and construction traffic prior to installation of the expansion joints.

The bridge deck surface shall conform to the provisions in "Asphalt Concrete" of these special provisions after installation of expansion joints.

MEASUREMENT AND PAYMENT

The contract lump sum price paid for expansion joint at the locations listed in the Engineer's Estimate shall include full compensation for furnishing all labor, materials, tools, equipment and incidentals, forming blockouts, and for doing all the work involved in fabricating, furnishing, transporting, storing, and installing the expansion joints, including bedding material, anchorage components, mock-up construction, protecting, repairing, cleaning and coating, complete in place, as shown on the plans, as specified in the Standard Specifications and these special provisions, and as directed by the Engineer.

Furnishing and erecting expansion joints including cover plates will be measured and paid for as furnish structural steel (bridge) and erect structural steel (bridge), respectively.

CONTRACT NO. 04-0120R4

CONTRACT CHANGE ORDER NO 144-S1

SHEET 9 OF 23

INDEX TO PLANS

SHEET NO. TITLE

1. GENERAL PLAN (Note 1 & 3)
2. INDEX TO PLANS (Note 1,2,3 & 4)
3. GENERAL NOTES NO. 1 (Note 1)
4. GENERAL NOTES NO. 2 (Note 3)
5. DECK CONTOURS (Note 1)
6. FOUNDATION PLAN
7. BENT 52A LAYOUT
8. BENT CAP DETAILS NO. 1
9. BENT CAP DETAILS NO. 2
10. BENT CAP DETAILS NO. 3
11. BENT CAP DETAILS NO. 4
12. BENT 52A FOOTING DETAILS NO. 1 (Note 1)
13. BENT 52A FOOTING DETAILS NO. 2
14. SKID BENT FOOTING DETAILS NO. 1
15. SKID BENT FOOTING DETAILS NO. 2
16. SKID BENT FOOTING DETAILS NO. 3
17. SKID BENT FOOTING DETAILS NO. 4
18. SKID BENT FOOTING DETAILS NO. 5
19. SKID BENT FOOTING DETAILS NO. 6
20. SHEET NOT USED
21. SUPPORT AT PIER E1
22. SUPPORT AT PIER E1 DETAILS NO. 1
23. SUPPORT AT PIER E1 DETAILS NO. 2
24. SUPPORT AT PIER E1 DETAILS NO. 3
25. SUPPORT AT PIER E1 DETAILS NO. 4
26. SHEET NOT USED
27. FRAMING PLAN NO. 1 (Note 3)
28. FRAMING PLAN NO. 2
29. TYPICAL SECTION
30. CAMBER
31. SHEET NOT USED
32. TRUSS LAYOUT NO. 1 (Note 3)
33. TRUSS LAYOUT NO. 2
34. TRUSS LAYOUT NO. 3
35. TRUSS LAYOUT NO. 4
36. TRUSS JOINT DETAILS NO. 1
37. TRUSS JOINT DETAILS NO. 2
38. TRUSS JOINT DETAILS NO. 3
39. TRUSS JOINT DETAILS NO. 4
40. TRUSS JOINT DETAILS NO. 5
41. TRUSS JOINT DETAILS NO. 6
42. TRUSS JOINT DETAILS NO. 7
43. TRUSS JOINT DETAILS NO. 8
44. TRUSS JOINT DETAILS NO. 9
45. TRUSS JOINT DETAILS NO. 10
46. TRUSS JOINT DETAILS NO. 11
47. TRUSS JOINT DETAILS NO. 12
48. TRUSS JOINT DETAILS NO. 13
49. TRUSS JOINT DETAILS NO. 14
50. TRUSS JOINT DETAILS NO. 15
51. TRUSS JOINT DETAILS NO. 16
52. TRUSS JOINT DETAILS NO. 17
53. TRUSS JOINT DETAILS NO. 18
54. TRUSS JOINT DETAILS NO. 19
55. TRUSS JOINT DETAILS NO. 20
56. TRUSS JOINT DETAILS NO. 21
57. TRUSS JOINT DETAILS NO. 22
58. FLOOR BEAM DETAILS NO. 1
59. FLOOR BEAM DETAILS NO. 2
60. FLOOR BEAM DETAILS NO. 3
61. STRINGER DETAILS NO. 1 (Note 3)
62. STRINGER DETAILS NO. 2
63. STRINGER DETAILS NO. 3
64. STRINGER DETAILS NO. 4
65. STRINGER DETAILS NO. 5
66. STRINGER DETAILS NO. 6
67. UPPER LATERAL BRACING LAYOUT NO. 1
68. UPPER LATERAL BRACING LAYOUT NO. 2
69. LOWER LATERAL BRACING LAYOUT NO. 1
70. LOWER LATERAL BRACING LAYOUT NO. 2
71. LATERAL BRACING DETAILS NO. 1
72. LATERAL BRACING DETAILS NO. 2
73. LATERAL BRACING DETAILS NO. 3
74. LATERAL BRACING DETAILS NO. 4
75. LATERAL BRACING DETAILS NO. 5
76. LATERAL BRACING DETAILS NO. 6
77. LATERAL BRACING DETAILS NO. 7
78. LATERAL BRACING DETAILS NO. 8
79. LATERAL BRACING DETAILS NO. 9
80. SHEET NOT USED
81. SHEET NOT USED
82. SHEET NOT USED
83. SHEET NOT USED
84. STEEL GIRDER DETAILS (Note 3)
85. MAN HOLE & HAND HOLE DETAILS
86. CONCRETE DECK DETAILS NO. 1
87. CONCRETE DECK DETAILS NO. 2
88. CONCRETE DECK DETAILS NO. 3
89. POUR SEQUENCE
90. BENT 52A EXPANSION JOINT LAYOUT (Note 4)
91. BENT 52A EXPANSION JOINT DETAILS NO. 1
92. BENT 52A EXPANSION JOINT DETAILS NO. 2
93. BENT 52A EXPANSION JOINT DETAILS NO. 3
94. BENT 52A EXPANSION JOINT DETAILS NO. 4
95. BENT 52A EXPANSION JOINT DETAILS NO. 5
96. BENT 52A EXPANSION JOINT DETAILS NO. 6
97. BENT 52A EXPANSION JOINT BARRIER NO. 1
98. BENT 52A EXPANSION JOINT BARRIER NO. 2
99. PIER E1 EXPANSION JOINT LAYOUT
100. PIER E1 EXPANSION JOINT DETAILS NO. 1
101. PIER E1 EXPANSION JOINT DETAILS NO. 2
102. PIER E1 EXPANSION JOINT DETAILS NO. 3
103. PIER E1 EXPANSION JOINT DETAILS NO. 4
104. PIER E1 EXPANSION JOINT DETAILS NO. 5
105. PIER E1 EXPANSION JOINT BARRIER NO. 1
106. PIER E1 EXPANSION JOINT BARRIER NO. 2
107. PIER E1 EXPANSION JOINT BARRIER NO. 3
108. PIER E1 EXPANSION JOINT BARRIER NO. 4
109. PIER E1 EXPANSION JOINT BARRIER NO. 5
110. PIER E1 EXPANSION JOINT BARRIER NO. 6
111. PIER E1 EXPANSION JOINT BARRIER NO. 7
112. JOINT SEAL ASSEMBLY (Note 3)
113. BEARING DETAILS NO. 1
114. BEARING DETAILS NO. 2
115. MISCELLANEOUS DETAILS NO. 1 (Note 3)
116. MISCELLANEOUS DETAILS NO. 2
117. MISCELLANEOUS DETAILS NO. 3
118. MISCELLANEOUS DETAILS NO. 4
119. MISCELLANEOUS DETAILS NO. 5
120. EXISTING TRUSS LAYOUT NO. 1
121. EXISTING TRUSS LAYOUT NO. 2
122. EXISTING TRUSS DETAILS NO. 1
123. EXISTING TRUSS DETAILS NO. 2
124. EXISTING TRUSS DETAILS NO. 3
125. EXISTING TRUSS DETAILS NO. 4
126. EXISTING TRUSS DETAILS NO. 5
127. EXISTING TRUSS DETAILS NO. 6
128. EXISTING TRUSS DETAILS NO. 7
129. EXISTING TRUSS DETAILS NO. 8
130. EXISTING TRUSS DETAILS NO. 9
131. EXISTING TRUSS DETAILS NO. 10
132. SKID BENT LAYOUT (Note 2)
133. SKID BENT SECTIONS NO. 1
134. SKID BENT SECTIONS NO. 2
135. KID BENT SECTIONS NO. 3
136. SKID BENT DETAILS NO. 1
137. SKID BENT DETAILS NO. 2
138. SKID BENT DETAILS NO. 3
139. SKID BENT DETAILS NO. 4
140. SKID BENT DETAILS NO. 5
141. SKID BENT DETAILS NO. 6
142. SKID BENT DETAILS NO. 7
143. SKID BENT DETAILS NO. 8
144. SKID BENT DETAILS NO. 9
145. SKID BENT DETAILS NO. 10
146. SKID BENT DETAILS NO. 11
147. SKID BEAM DETAILS NO. 1
148. SKID BEAM DETAILS NO. 2
149. SKID BEAM DETAILS NO 3
150. SKID BEAM DETAILS NO 4
151. SKID BEAM DETAILS NO. 5
152. SKID BEAM DETAILS NO. 6
153. SKID BEAM DETAILS NO. 7
154. SHEET NOT USED
155. ROLL-OUT ROLL-IN OPERATION SEQUENCE NO. 1
156. ROLL-OUT ROLL-IN OPERATION SEQUENCE NO. 2
157. ROLL-OUT ROLL-IN OPERATION SEQUENCE NO. 3
158. ROLL-OUT ROLL-IN OPERATION SEQUENCE NO. 4
159. ROLL-OUT ROLL-IN OPERATION SEQUENCE NO. 5
160. ROLL-OUT ROLL-IN OPERATION SEQUENCE NO. 6
161. ROLL-OUT ROLL-IN TOLERANCES AND DEFLECTIONS
162. EXISTING YB4 TRUSS LIFTING PROCEDURE
163. NEW ETI TRUSS SETTING PROCEDURE
164. TEMPORARY BEARING LAYOUT
165. TEMPORARY BEARING DETAILS
166. EXISTING YB4 TRUSS WORK PLAN NO. 1
167. EXISTING YB4 TRUSS WORK PLAN NO. 2
168. TO 200. SHEET NOT USED
201. LOG OF TEST BORINGS NO. 1 (Note 1)
202. LOG OF TEST BORINGS NO. 2
203. LOG OF TEST BORINGS NO. 3
204. LOG OF TEST BORINGS NO. 4
205. LOG OF TEST BORINGS NO. 5
206. LOG OF TEST BORINGS NO. 6
207. LOG OF TEST BORINGS NO. 7
208. LOG OF TEST BORINGS NO. 8
209. LOG OF TEST BORINGS 1 OF 17
210. LOG OF TEST BORINGS 3 OF 17
211. LOG OF TEST BORINGS 5 OF 17
212. LOG OF TEST BORINGS 6 OF 17
213. LOG OF TEST BORINGS 16 OF 17
214. LOG OF TEST BORINGS 17 OF 17

DIST	COUNTY	ROUTE	KILOMETER POST TOTAL PROJECT	SHEET NO.	TOTAL
04	SF	80	12.6/13.2		

Caltrans Metric

REGISTERED CIVIL ENGINEER

5-12-08
PLANS APPROVAL DATE

REGISTERED PROFESSIONAL ENGINEER — Nadim Elmir Sah — No. C59203 — 06/30/09 — CIVIL — STATE OF CALIFORNIA

The state of California or its officers or agents shall not be responsible for the accuracy or completeness of electronic copies of this plan sheet.

T.Y. LIN / MOFFATT & NICHOL
Two Harrison Street, Suite 500
San Francisco, CA 94105

CONTRACT NO. 04-0120R4

CONTRACT CHANGE ORDER NO 149-81

SHEET 10 OF 23

Notes:

1. Sheets pertaining to 100% Concrete Substructure submittal (Submittal Date 11-5-07).
2. Sheets pertaining to 100% Skid Bent and Skid Beam submittal (Submittal Date 3-15-08).
3. Sheets pertaining to 100% Truss submittal (Submittal Date 4-7-08).
4. Sheets pertaining to 100% Expansion Joints and Expansion Joint Barriers submittal (Submittal Date 5-12-08).

100% PS&E

FILE => P:\BB\04-0120R4\ETI\Dgn\Xqttp-1.dgn

TIME PLOTTED => 2:58:48 PM

DATE PLOTTED => 5/12/2008

USERNAME => Alee

T. Ostrom/M. Whiteside/A. Akinsanya
DESIGN OVERSIGHT

SIGN OFF DATE

DESIGN	BY M. Sah	CHECKED	S. Cheng
DETAILS	BY S. Lee	CHECKED	A. Lee
QUANTITIES	BY H. Nelson	CHECKED	A. Lee

DESIGN DETAIL SHEET METRIC (REV. 3/4/98) ©DATE© ©TIME© Pen Table File

ORIGINAL SCALE IN MILLIMETERS FOR REDUCED PLANS 0 10 20 30 40 50 60 70 80 90 100

PREPARED FOR THE STATE OF CALIFORNIA DEPARTMENT OF TRANSPORTATION

M. Sah	PROJECT ENGINEER
S. Abbas	PROJECT MANAGER
CU	
EA 0120R4	

ALL DIMENSIONS ARE IN MILLIMETERS UNLESS OTHERWISE SHOWN

BRIDGE NO.	34-0006 (TEMP)
KILOMETER POST	12.6

DISREGARD PRINTS BEARING EARLIER REVISION DATES

REVISION DATES (PRELIMINARY STAGE ONLY)

STAGE	STAGE	STAGE	STAGE

SAN FRANCISCO OAKLAND BAY BRIDGE
EAST SPAN SEISMIC SAFETY PROJECT

EAST TIE-IN

INDEX TO PLANS

SHEET	OF
2	214

LEGEND:

Indicates steel deck plate with V-grooves at ±45°.

Notes:

1. The Contractor shall verify all controlling field dimensions before ordering or fabricating any material.
2. For Sections A-A and B-B, see "Bent 52A Expansion Joint Details No. 1" and "Bent 52A Expansion Joint Details No. 3" sheet.
3. For Fuse Panel details, see "Bent 52A Expansion Joint Details No. 5" sheet.
4. For Barrier expansion joint and cover ℄ details, see "Bent 52A Expansion Joint Barriers" sheets.

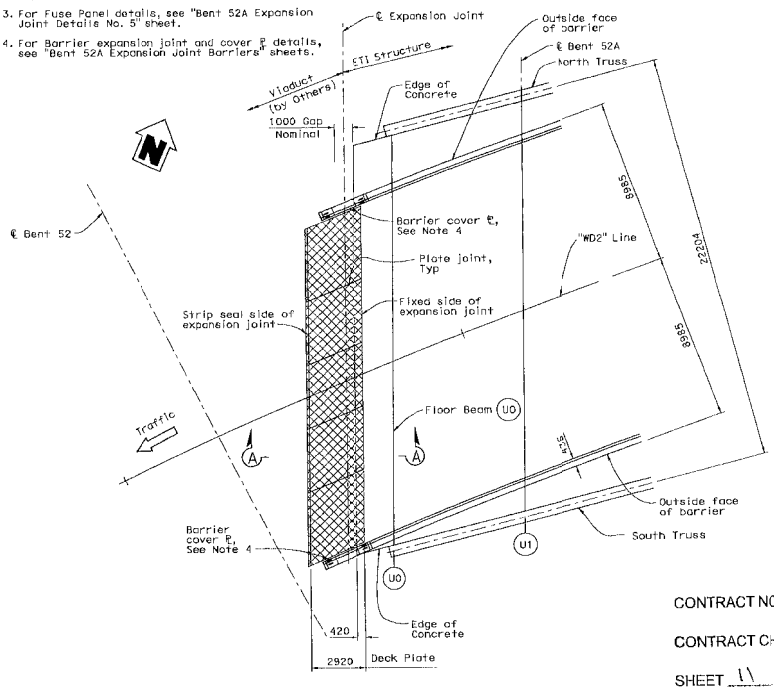

PLAN EXPANSION JOINT UPPER DECK

1:100

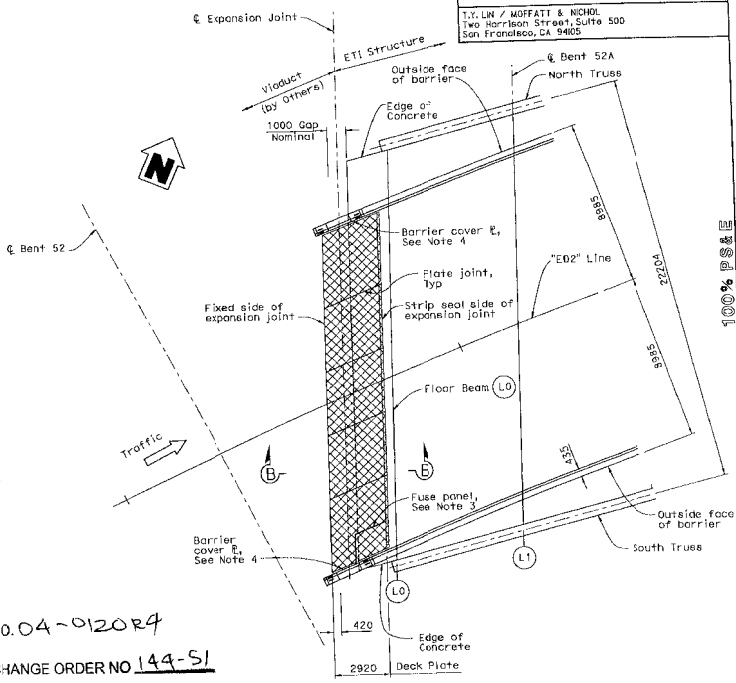

PLAN EXPANSION JOINT LOWER DECK

1:100

CONTRACT NO. 04-0120R4

CONTRACT CHANGE ORDER NO 144-51

SHEET 11 OF 23

DIST	COUNTY	ROUTE	KILOMETER POST TOTAL PROJECT	SHEET NO	TOTAL
04	SF	80	12.6/13.2		

REGISTERED CIVIL ENGINEER

5-12-08

PLANS APPROVAL DATE

The State of California or its officers or agents shall not be responsible for the accuracy or completeness of electronic copies of this plan sheet.

Charles Redfield, No. C 27805, Exp. 12/31/09, CIVIL, State of California

T.Y. LIN / MOFFATT & NICHOL
Two Harrison Street, Suite 500
San Francisco, CA 94105

ALL DIMENSIONS ARE IN MILLIMETERS UNLESS OTHERWISE SHOWN

SAN FRANCISCO OAKLAND BAY BRIDGE
EAST SPAN SEISMIC SAFETY PROJECT

EAST TIE-IN

BENT 52A EXPANSION JOINT LAYOUT

T. Datrom/M. Whiteside/A. Akinsanya	DESIGN	BY C. Redfield, R. Nutt	CHECKED S. Chang
DESIGN OVERSIGHT	DETAILS	BY S. Lee, P. Zhao	CHECKED A. Lee
SIGN OFF DATE	QUANTITIES	BY H. Nelson	CHECKED A. Lee

PREPARED FOR THE STATE OF CALIFORNIA DEPARTMENT OF TRANSPORTATION

W. Soh	PROJECT ENGINEER
S. Abdos	PROJECT MANAGER
CU	
EA 0120R4	

BRIDGE NO. 34-0008 (TEMP.)
KILOMETER POST 12.6

DISREGARD PRINTS BEARING EARLIER REVISION DATES

REVISION DATES (PRELIMINARY STAGE ONLY)

SHEET	OF
90	214

DESIGN DETAIL SHEET METRIC-REV. 3/5/08
©DATE© ©TIME© Pen Table File

ORIGINAL SCALE IN MILLIMETERS FOR REDUCED PLANS 0 10 20 30 40 50 60 70 80 90 100

FILE => pw\so\04-012001\w41\sgn\sbdet01.dgn

DATE PLOTTED => 5/9/2008 TIME PLOTTED => 15:51:13 PM

USERNAME => XJ088

100% PS&E

DIST	COUNTY	ROUTE	KILOMETER POST TOTAL PROJECT	SHEET NO.	TOTAL
04	SF	80	12.6/13.2		

REGISTERED CIVIL ENGINEER

5-12-08
PLANS APPROVAL DATE

The State of California or its officers or agents shall not be responsible for the accuracy or completeness of electronic copies of this plan sheet.

REGISTERED PROFESSIONAL ENGINEER — Charles Redfield — No. C 27605 — Exp 12/31/09 — CIVIL — STATE OF CALIFORNIA

T.Y. LIN / MOFFATT & NICHOL
Two Harrison Street, Suite 500
San Francisco, CA 94105

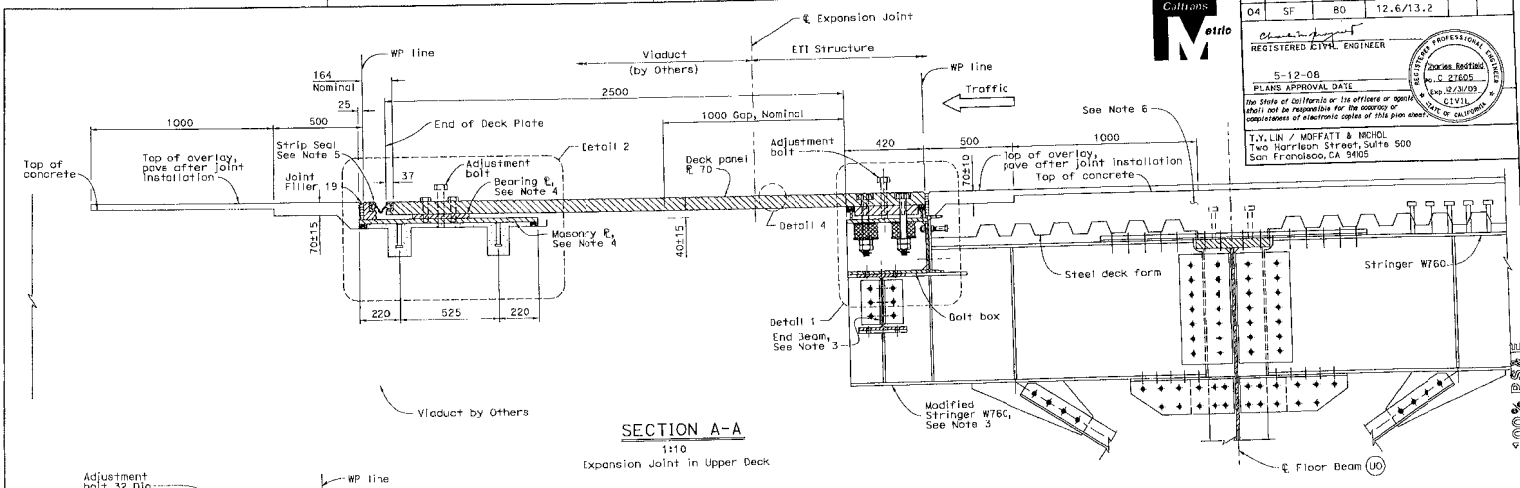

SECTION A-A
1:10
Expansion Joint in Upper Deck

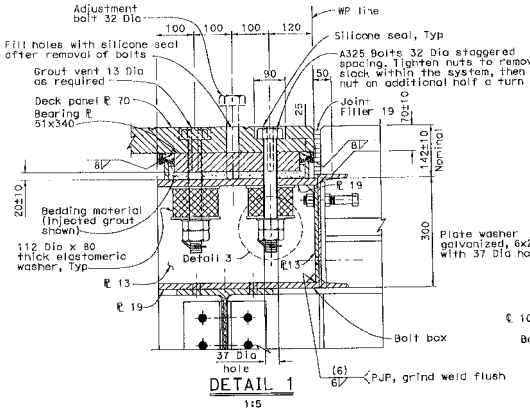

DETAIL 1
1:5

Note: Detail drawn for upper deck expansion joint. Detail for lower deck expansion joint similar.

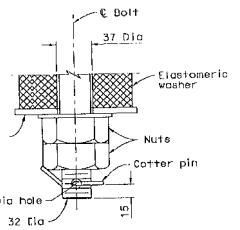

DETAIL 3
No Scale

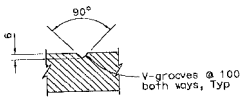

DETAIL 4
No Scale

CONTRACT NO. 04-0120R4

CONTRACT CHANGE ORDER NO 144-51

SHEET 12 OF 23

Notes:

1. The Contractor shall verify all controlling field dimensions before ordering or fabricating any material.
2. Expansion Joint Movements:
   Thermal Movement: Longitudinal 40± mm
   Seismic Movement: Longitudinal 1000± mm *
   Transverse 1075± mm *
   * To account for potential variations in the response spectrum, a factor of safety of 1.5 has been applied and included in these values.
3. For end beam and stringer, see "Stringer Details" sheets.
4. Masonry and bearing plates fixed to Deck Panel plates and to be released upon completion of installation and grouting after initial set is achieved.
5. For strip seal detail, see "Bent 52A Expansion Joint Details No. 3" sheet.
6. For deck reinforcement details, see "Concrete Deck Details" sheets.
7. For Detail 2, see "Bent 52A Expansion Joint Details No. 3" sheet.

ALL DIMENSIONS ARE IN MILLIMETERS UNLESS OTHERWISE SHOWN

SAN FRANCISCO OAKLAND BAY BRIDGE
EAST SPAN SEISMIC SAFETY PROJECT

EAST TIE-IN

BENT 52A EXPANSION JOINT DETAILS NO. 1

T. Ostrom/M. Whiteside/A. Akinsanya	DESIGN	BY C. Redfield, R. Nutt	CHECKED S. Cheng
DESIGN OVERSIGHT	DETAILS	BY S. Lee, P. Zhao	CHECKED A. Lee
SIGN OFF DATE	QUANTITIES	BY H. Nelson	CHECKED A. Lee

PREPARED FOR THE STATE OF CALIFORNIA DEPARTMENT OF TRANSPORTATION

W. Soh, PROJECT ENGINEER
S. Abbas, PROJECT MANAGER

BRIDGE NO. 34-0006 (TEMP)
KILOMETER POST 12.6

PLOTTING PRINTS BEARING EARLIER REVISION DATES →

REVISION DATES (PRELIMINARY STAGE ONLY)

DESIGN DETAIL SHEET DIST/ORIV. 3/4/98
©DATE© ©TIME© Pen Table File

ORIGINAL SCALE IN MILLIMETERS FOR BRIDGE PLANS 0 10 20 30 40 50 60 70 80 90 100

CU
EA 0120R4
FILE => p:\bb\04-0120r1\ef\dgn\bkbejd01.dgn

DIST | COUNTY | ROUTE | POST MILE | SHEET NO. | TOTAL SHEETS
04 | SF | 80 | 12.6/13.2 | 91 | 214

DATE PLOTTED => 5/9/2008
TIME PLOTTED => 3:40:56 PM
USERNAME => ALEX

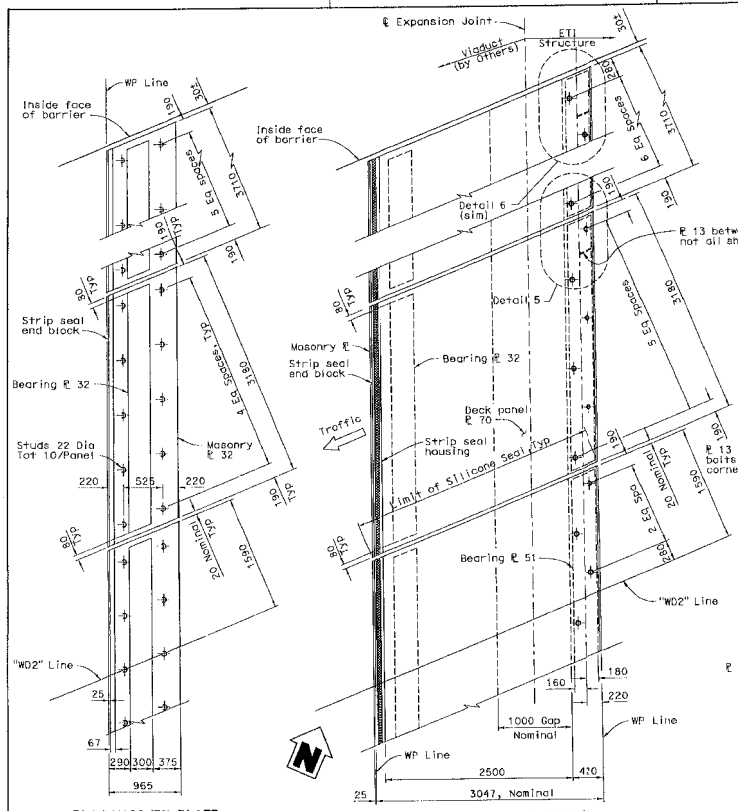

PLAN MASONRY PLATE

PLAN DECK PANEL PLATE

TYPICAL PANELS - UPPER DECK

1:25

Panels to the left of "WD2" line shown
Panels to the right of "WD2" line similar
Gap not drawn to scale

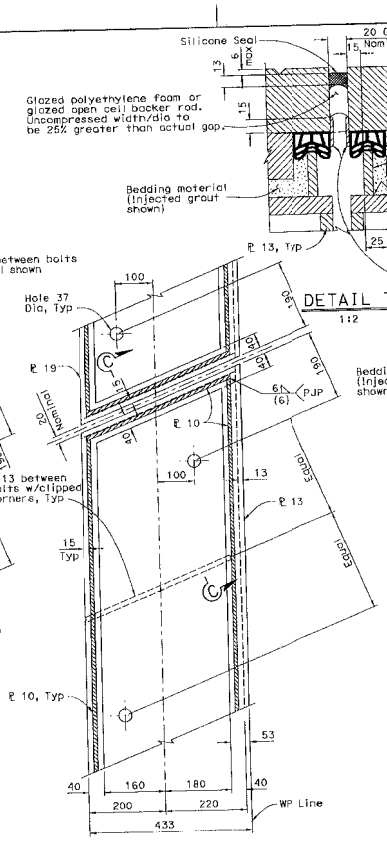

DETAIL 7

1:2

DETAIL 5

1:5

SECTION C-C

1:5

Detail drawn for Expansion Joint Upper Deck
Detail for Expansion Joint Lower Deck similar
Plan view of Bolt box below Deck panel

ALL DIMENSIONS ARE IN MILLIMETERS UNLESS OTHERWISE SHOWN

Notes:

1. The Contractor shall verify all controlling field dimensions before ordering or fabricating any material.
2. Dimensions are given parallel to or perpendicular to "WD2" Line.
3. The stringers are not shown for clarity.
4. For Detail 6, see "Bent 52A Expansion Joint Details No. 4" sheet.
5. Direction of thermal movement.

DIST	COUNTY	ROUTE	KILOMETER POST TOTAL PROJECT	SHEET No.	TOTAL
04	SF	80	12.6/13.2		

REGISTERED CIVIL ENGINEER

5-12-08

PLANS APPROVAL DATE

Charles Redfield, No. C 27605, Exp. 12/31/09, CIVIL, State of California

The State of California or its officers or agents shall not be responsible for the accuracy or completeness of electronic copies of this plan sheet.

T.Y. LIN / MOFFATT & NICHOL
Two Harrison Street, Suite 500
San Francisco, CA 94105

CONTRACT NO. 04-0120R4

CONTRACT CHANGE ORDER NO. 149-S1

SHEET 13 OF 23

100% plans

T. Oetrom/M. Whiteside/A. Akinsanya	DESIGN	C. Redfield, R. Nutt	S. Cheng
DESIGN OVERSIGHT	DETAILS	S. Lee, P. Zhao	A. Lee
SIGN OFF DATE	QUANTITIES	H. Nalon	A. Lee

PREPARED FOR THE STATE OF CALIFORNIA DEPARTMENT OF TRANSPORTATION

M. Soh, PROJECT ENGINEER
S. Adnan, PROJECT MANAGER

BRIDGE NO. 34-0006 (TEMP.)
KILOMETER POST 12.6

CU EA 0120R4

SAN FRANCISCO OAKLAND BAY BRIDGE
EAST SPAN SEISMIC SAFETY PROJECT

EAST TIE-IN

BENT 52A EXPANSION JOINT DETAILS NO. 2

STANDARD PLANS READING EARLIER REVISION DATES →

REVISION DATES (WHEN/WHY/BY WHOM) (NLT)

SHEET 92 OF 214

DESIGN DETAIL SHEET (METRIC) REV. 3/4/08 ◆DATE◆ ◆TIME◆ Pen Table File

ORIGINAL SCALE IN MILLIMETERS FOR REDUCED PLANS 0 10 20 30 40 50 60 70 80 90 100

FILE => p:\bb\04-0120r1\et1\sgn\okbe|d02.dgn

DATE PLOTTED => 5/9/2008 TIME PLOTTED => 3:58:09 PM

USERNAME => Akae

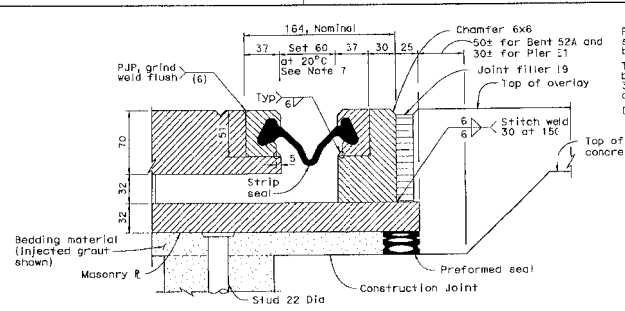

STRIP SEAL DETAIL

1:2

Detail drawn for Expansion Jt at Bent 52A.
For detail variation at Pier E1, see " Pier E1
Expansion Joint Details No. 1" sheet.

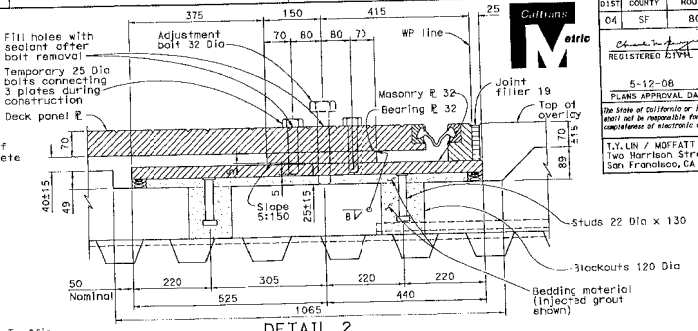

DETAIL 2

1:5

Detail shown for Lower Deck,
Upper Deck similar

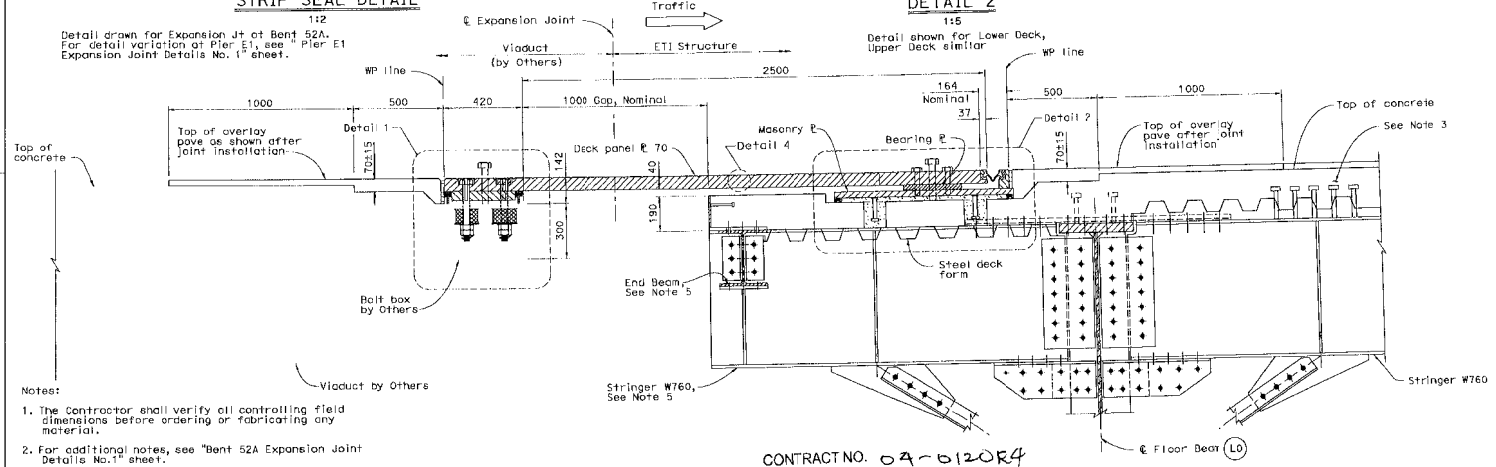

SECTION B-B

1:10

Expansion Joint in Lower Deck

Notes:

1. The Contractor shall verify all controlling field dimensions before ordering or fabricating any material.
2. For additional notes, see "Bent 52A Expansion Joint Details No.1" sheet.
3. For deck reinforcement details, see "Concrete Deck Details" sheets.
4. For Detail 1, see "Bent 52A Expansion Joint Details No. 1" sheet.
5. For End Beam and stringer details, see "Stringer Details" sheets.
6. For Detail 4, see "Bent 52A Expansion Joint Detail No.1" sheet.
7. Strip seal shall have a movement rating of 100mm.

CONTRACT NO. 04-0120R4

CONTRACT CHANGE ORDER NO 144-S1

SHEET 14 OF 23

ALL DIMENSIONS ARE IN MILLIMETERS UNLESS OTHERWISE SHOWN

DIST	COUNTY	ROUTE	KILOMETER POST TOTAL PROJECT	SHEET No	TOTAL
04	SF	80	12.6/13.2		

REGISTERED CIVIL ENGINEER

5-12-08

PLANS APPROVAL DATE

The State of California or its officers or agents shall not be responsible for the accuracy or completeness of electronic copies of this plan sheet.

REGISTERED PROFESSIONAL ENGINEER
Charles Redfield
No. C 27605
Exp. 12/31/09
CIVIL
STATE OF CALIFORNIA

T.Y. LIN / MOFFATT & NICHOL
Two Harrison Street, Suite 500
San Francisco, CA 94105

SAN FRANCISCO OAKLAND BAY BRIDGE
EAST SPAN SEISMIC SAFETY PROJECT

EAST TIE-IN

BENT 52A EXPANSION JOINT DETAILS NO. 3

T. Ostrom/M. Whiteside/A. Akinsanya	DESIGN	BY C. Redfield, R. Nutt	CHECKED S. Cheng
DESIGN OVERSIGHT	DETAILS	BY S. Lee P. Zhao	CHECKED A. Lee
SIGN OFF DATE	QUANTITIES	BY H. Nelson	CHECKED A. Lee

DESIGN DETAIL SHEET (METRIC) REV. 3/1/98
#DATE# #TIME# Pen Table File

ORIGINAL SCALE IN MILLIMETERS FOR REDUCED PLANS 0 10 20 30 40 50 60 70 80 90 100

PREPARED FOR THE STATE OF CALIFORNIA DEPARTMENT OF TRANSPORTATION

M. Soh
PROJECT ENGINEER
S. Abbas
PROJECT MANAGER

BRIDGE NO. 34-0006 (TEMP)
KILOMETER POST 12.6

CU
EA 0120R4

DISREGARD PRINTS BEARING EARLIER REVISION DATES

REVISION DATES (PRELIMINARY STAGE ONLY) 11/29/01 4/01/04 1/01/04

SHEET 93 OF 214

FILE => p:\bb\04-012001\eti\dgn\ckbejd03.dgn

100% PS&E

FILE => p:\bb\04-012001\eti\dgn\ckbejd03.dgn

TIME PLOTTED => 3:51:01 PM

DATE PLOTTED => 5/9/2008

USERNAME => ALee

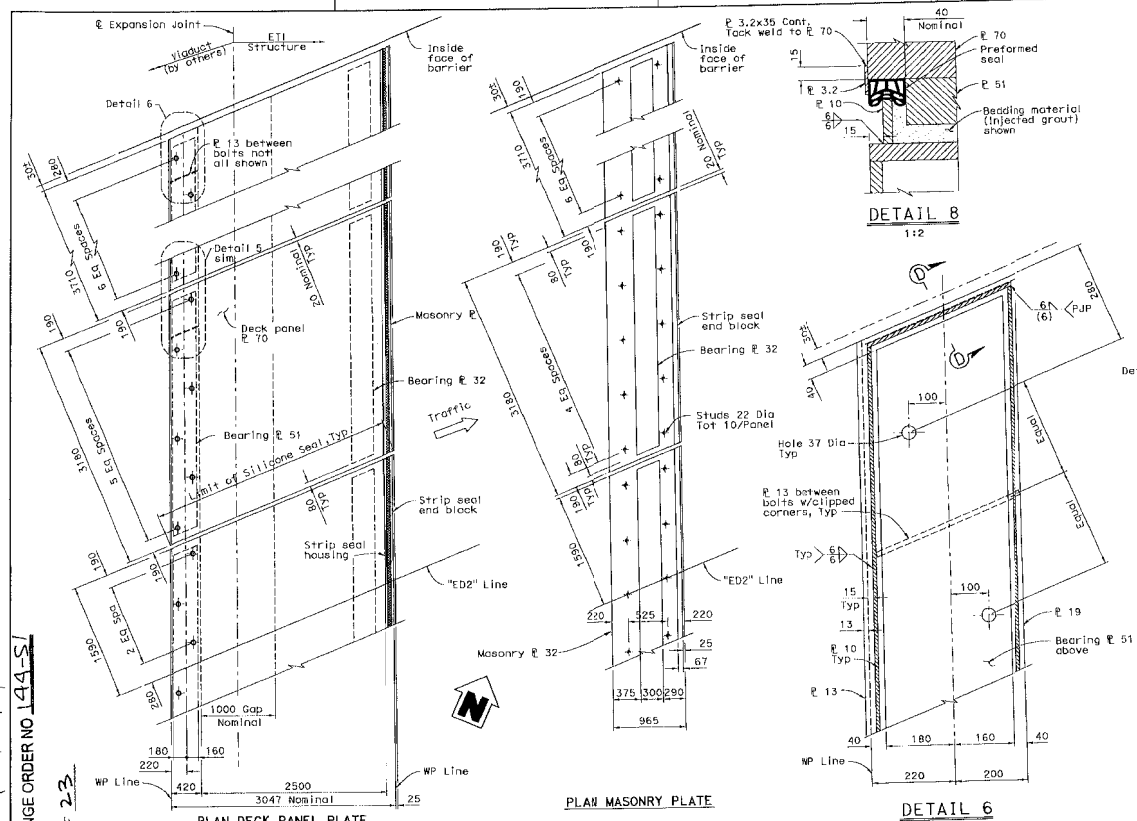

TYPICAL PANELS - LOWER DECK

1:25

Panels to the left of "ED2" line shown
Panels to the right of "ED2" line similar (See Note 4)
Gap not drawn to scale

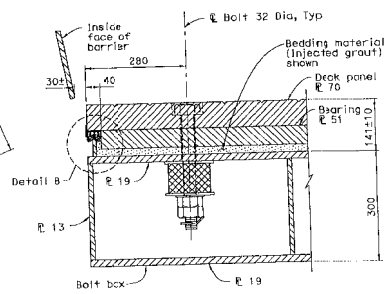

SECTION D-D

1:5

Notes:

1. The Contractor shall verify all controlling field dimensions before ordering or fabricating any material.
2. Dimensions are given parallel to or perpendicular to "ED2" Line.
3. The stringers are not shown for clarity.
4. For detail of Fuse Panel, see "Bent 52A Expansion Joint Details No. 5" sheet.
5. For Detail 5, see "Bent 52A Expansion Joint Details No. 2" sheet.
6. Direction of thermal movement.

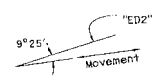

Detail drawn for Expansion Joint Lower Deck
Detail for Expansion Joint Upper Deck similar
Plan view of Bolt box below Deck panel
ALL DIMENSIONS ARE IN MILLIMETERS UNLESS OTHERWISE SHOWN

DIST	COUNTY	ROUTE	KILOMETER POST TOTAL PROJECT	SHEET No	TOTAL
04	SF	80	12.6/13.2		

REGISTERED CIVIL ENGINEER
5-12-08
PLANS APPROVAL DATE

The State of California or its officers or agents shall not be responsible for the accuracy or completeness of electronic copies of this plan sheet.

REGISTERED PROFESSIONAL ENGINEER Charles Redfield No. C 27605 Exp. 12/31/09 CIVIL STATE OF CALIFORNIA

T.Y. LIN / MOFFATT & NICHOL
Two Harrison Street, Suite 500
San Francisco, CA 94105

SAN FRANCISCO OAKLAND BAY BRIDGE
EAST SPAN SEISMIC SAFETY PROJECT

EAST TIE-IN

BENT 52A EXPANSION JOINT DETAILS NO. 4

DESIGN	BY C. Redfield, R. Nutt	CHECKED S. Cheng	
DETAILS	BY S. Lee, P. Zhao	CHECKED A. Lee	
QUANTITIES	BY H. Nelson	CHECKED A. Lee	

PREPARED FOR THE STATE OF CALIFORNIA DEPARTMENT OF TRANSPORTATION

M. Soh, PROJECT ENGINEER
S. Abbas, PROJECT MANAGER
CU EA 012084

BRIDGE NO. 34-0006 (TEMP.)
KILOMETER POST 12.6

DISREGARD PRINTS BEARING EARLIER REVISION DATES

REVISION DATES (PRELIMINARY STAGE ONLY)

SHEET 94 OF 214

T. Astrom, B. Whiteside/A. Akinsanya
DESIGN OVERSIGHT
SIGN OFF DATE
DESIGN DETAIL SHEET METRIC (REV. 3/1/08)
DATE TIME Pen Table File

ORIGINAL SCALE IN MILLIMETERS FOR REDUCED PLANS 0 10 20 30 40 50 60 70 80 90 100

FILE => p:\bb\04-012001\etl\dgn\akbejd04.dgn

CONTRACT NO. 04-012084
CONTRACT CHANGE ORDER NO 144-S1
SHEET 15 OF 23

100% PS&E

FILE => p:\bb\04-012001\etl\dgn\akbejd04.dgn
TIME PLOTTED => 3:51:03 PM
DATE PLOTTED => 5/9/2008
USERNAME => ALee

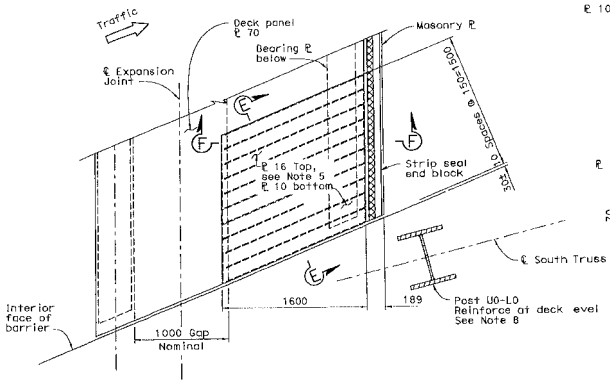

DETAIL OF FUSE PANEL
1:20

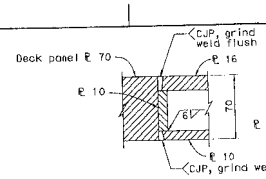

DETAIL 9
1:2

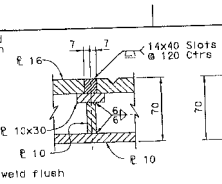

DETAIL 10
1:2

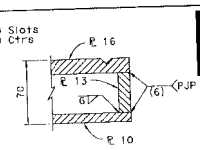

DETAIL 11
1:2

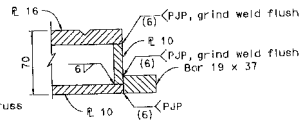

DETAIL 12
1:2

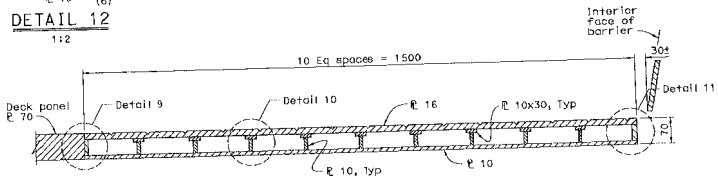

SECTION E-E
1:5

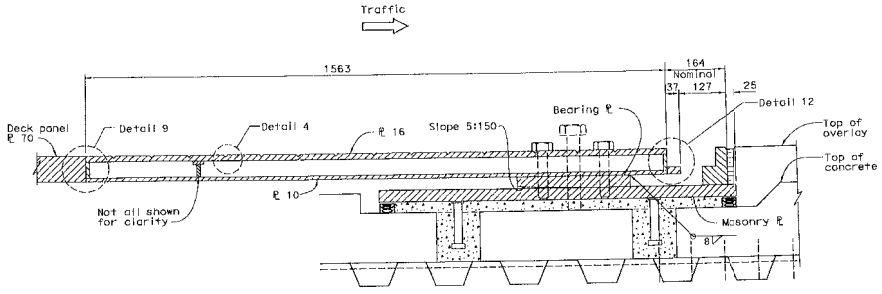

SECTION F-F
1:5
See Note 4

Notes:

1. Contractor shall verify all controlling field dimensions before ordering or fabricating any material.
2. Direction of thermal movement

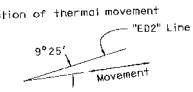

3. The stringers are not shown here for clarity.
4. For balance of details, see "Bent 52A Expansion Joint Details No. 3" sheet.
5. Plate with V-Grooves at 45°.
6. For Detail 4, see "Bent 52A Expansion Joint Detail No. 1" sheet.
7. Strip seal element not shown here for clarity.
8. For reinforcement of post, see "Miscellaneous Details" sheets.

DIST	COUNTY	ROUTE	KILOMETER POST TOTAL PROJECT	SHEET NO	TOTAL
04	SF	80	12.6/13.2		

REGISTERED CIVIL ENGINEER
5-12-08
PLANS APPROVAL DATE

The State of California or its officers or agents shall not be responsible for the accuracy or completeness of electronic copies of this plan sheet.

REGISTERED PROFESSIONAL ENGINEER Charles Redfield No. C 27605 Exp. 12/31/09 CIVIL STATE OF CALIFORNIA

T.Y.LIN / MOFFATT & NICHOL
Two Harrison Street, Suite 500
San Francisco, CA 94105

CONTRACT NO. 04-012084
CONTRACT CHANGE ORDER NO 144-S1
SHEET 16 OF 23

100% PS&E

ALL DIMENSIONS ARE IN MILLIMETERS UNLESS OTHERWISE SHOWN

SAN FRANCISCO OAKLAND BAY BRIDGE
EAST SPAN SEISMIC SAFETY PROJECT
EAST TIE-IN
BENT 52A EXPANSION JOINT DETAILS NO. 5

T. Ostrom/M. Whiteside/A. Akinsanya
DESIGN OVERSIGHT
SIGN OFF DATE
DESIGN DETAIL SHEET METRIC REV. 3/1/98
DATE TIME Pen Table File

	BY	CHECKED
DESIGN	C. Redfield, R. Nutt	S. Cheng
DETAILS	S. Lee, P. Zhao	A. Lee
QUANTITIES	H. Nelson	A. Lee

ORIGINAL SCALE IN MILLIMETERS FOR REDUCED PLANS 0 10 20 30 40 50 60 70 80 90 100

PREPARED FOR THE STATE OF CALIFORNIA DEPARTMENT OF TRANSPORTATION

M. Sah
PROJECT ENGINEER
S. Abbas
PROJECT MANAGER

BRIDGE NO. 34-0006 (TEMP)
KILOMETER POST 12.6

CU
EA 012084

DISREGARD PRINTS BEARING EARLIER REVISION DATES
REVISION DATES (PROJECTS/MAY ADDS ONLY)
11/05/07 4/7/08 5/7/08

SHEET 95 OF 214

FILE => p:\bb\04-012001\et1\dgn\akbsj005.dgn

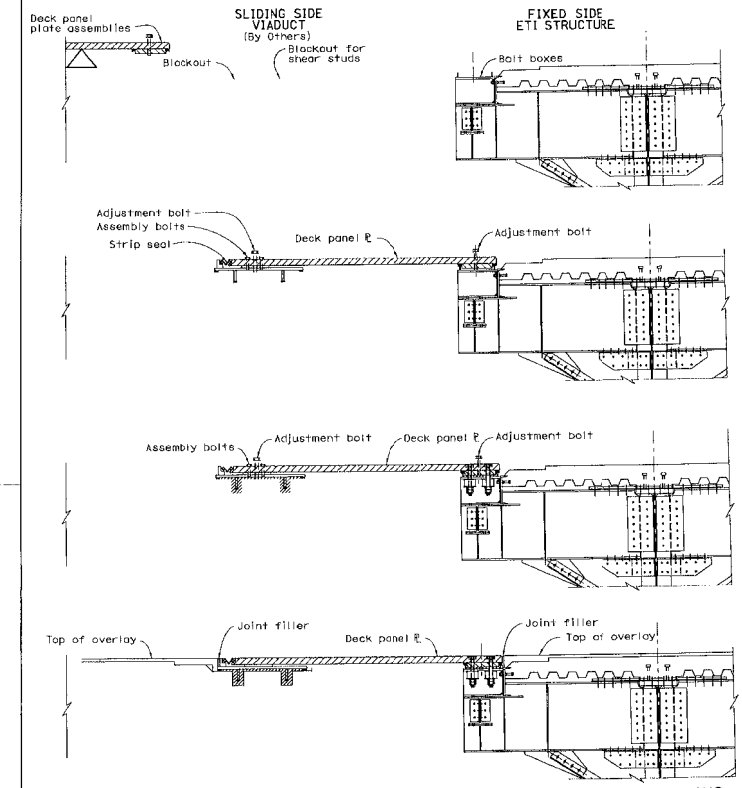

Note: Sequence shown for use of injected grout as bedding material.

Phase 1: - Joint situation at completion of Roll-in operation.

1. Deck on sliding side prepared with blackouts to receive the masonry plate and the vertical shear studs.
2. Bolt boxes cast in on the fixed side.
3. Deck panel plate assemblies prefabricated including prepositioned bearing and masonry plates and strip seals.
   a. Strip seal end block welded to masonry plate. Set gap for anticipated installation temperatures.
   b. Strip seals installed in each individual plate assembly.
4. Place deck panel assemblies for the Bent 52A expansion joints on the Viaduct prior to Roll-Out Roll-In operation. The assemblies consist of prefabricated and per-positioned bearing and masonry plates, and completed strip seals.

Phase 2: - Place all five deck panel plate assemblies in position across the joint opening.

- Adjust deck panel plates to achieve best fit with plan and profile.
- Fix panel height with use of the adjustment bolts.
- Ensure that the perimeter around the areas to be grouted are properly sealed.

Phase 3: - Inject fast setting grout under low pressure on both sliding side and fixed side.

- Install bolting on the fixed side as follows:
  1. Withdraw the plastic dowels from the holes once the grout has set enough to not flow.
  2. Field drill through the opened hole into the top plate of the bolt box below.
  3. Insert and tighten the bolts using the neoprene washer assemblies and lock nuts.
  4. Complete all bolts on the fixed side

Phase 4: - After the grout has achieved initial set, extract the assembly bolts and fill the holes with sealant.

- Remove the adjustment bolts and fill the holes with sealant.
- Place joint filler strip elements on each side of the expansion joint assemblies.
- Place remainder of overlay on each side of the expansion joints feathering to the finished pavement.
- Place silicone seal between deck panel plates.
- Clean up.

Notes:

1. Construction sequence shown for the Bent 52A expansion joint in the upper deck with traffic towards San Francisco. Construction sequence for the Bent 52A expansion joint in the lower deck with traffic in direction of Oakland similar.
2. Deck panel plate assemblies weight, including bearing and masonry plates and strip seals is approximately between 7.0 tons and 8.5 tons.
3. To expedite the construction sequence and to maximize efficiency, the Contractor shall provide separate work teams, fully equipped with personnel and equipment, dedicated for each expansion joint location.
4. The Contractor to provide temporary bridges to allow equipment to cross joints during bedding material curing time without loading the expansion joint plates.

CONTRACT NO. 04-0120R4

CONTRACT CHANGE ORDER NO. 144-S1

SHEET 17 OF 23

CONSTRUCTION SEQUENCE

Expansion Joint at Bent 52A

DIST	COUNTY	ROUTE	KILOMETER POST TOTAL PROJECT	SHEET No	TOTAL
04	SF	80	12.6/13.2		

Caltrans Metric

REGISTERED CIVIL ENGINEER

5-12-08

PLANS APPROVAL DATE

REGISTERED PROFESSIONAL ENGINEER Charles Redfield No. C 27605 Exp. 12/31/09 CIVIL STATE OF CALIFORNIA

The State of California or its officers or agents shall not be responsible for the accuracy or completeness of electronic copies of this plan sheet.

T.Y. LIN / MOFFATT & NICHOL
Two Harrison Street, Suite 500
San Francisco, CA 94105

100% PS&E

FILE => p:\bb\04-012001\eti\dgn\okbejd06.dgn

TIME PLOTTED => 3:15:11 PM

DATE PLOTTED => 5/9/2008

USERNAME => ALEE

ALL DIMENSIONS ARE IN MILLIMETERS UNLESS OTHERWISE SHOWN

SAN FRANCISCO OAKLAND BAY BRIDGE
EAST SPAN SEISMIC SAFETY PROJECT

EAST TIE-IN

BENT 52A EXPANSION JOINT DETAILS NO. 6

T. Ostrom/M. Whiteside/A. Akinsanya
DESIGN OVERSIGHT

SIGN OFF DATE

DESIGN DETAIL SHEET (METRIC) REV. 3/1/88
DATE *TIME* Pen Table File

DESIGN	BY C. Redfield, R. Nutt	CHECKED S. Cheng	
DETAILS	BY S. Lee, P. Zhao	CHECKED A. Lee	
QUANTITIES	BY H. Nelson	CHECKED A. Lee	

ORIGINAL SCALE IN MILLIMETERS FOR REDUCED PLANS 0 10 20 30 40 50 60 70 80 90 100

PREPARED FOR THE STATE OF CALIFORNIA DEPARTMENT OF TRANSPORTATION

M. Sch
PROJECT ENGINEER
S. Abbas
PROJECT MANAGER

CU
EA 0120R4

BRIDGE NO. 34-0006 (TEMP)
KILOMETER POST 12.6

DISREGARD PRINTS BEARING EARLIER REVISION DATES

REVISION DATES (PRELIMINARY STAGE ONLY) 11/30/01 1/31/08 5/12/08

SHEET 96 OF 214

FILE => p:\bb\04-012001\eti\dgn\okbejd06.dgn

CONTRACT NO. 04-0120R4

CONTRACT CHANGE ORDER NO 144-S1

SHEET 18 OF 23

LEGEND:

Indicates steel deck plate V-grooves at ±45°

Indicates existing structure

Notes:

1. The Contractor shall verify all controlling field dimensions before ordering or fabricating any material.
2. For Sections A-A and B-B, see "Pier E1 Expansion Joint Details No. 1" and "Pier E1 Expansion Joint Details No. 3" sheets, respectively.
3. For barrier expansion joint and cover ℄ details, see "Pier E1 Expansion Joint Barrier" sheets.

DIST	COUNTY	ROUTE	KILOMETER POST TOTAL PROJECT	SHEET No	TOTAL
04	SF	80	12.6/13.2		

Caltrans Metric

REGISTERED CIVIL ENGINEER

5-12-08

PLANS APPROVAL DATE

The State of California or its officers or agents shall not be responsible for the accuracy or completeness of electronic copies of this plan sheet.

REGISTERED PROFESSIONAL ENGINEER Charles Redfield No. C 27605 Exp. 12/31/09 CIVIL STATE OF CALIFORNIA

T.Y. LIN / MOFFATT & NICHOL
Two Harrison Street, Suite 500
San Francisco, CA 94105

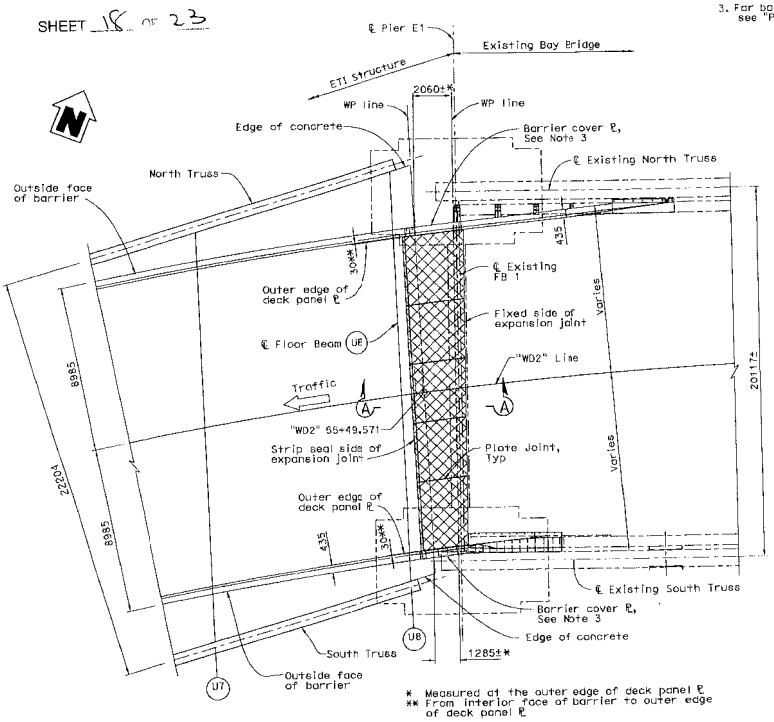

* Measured at the outer edge of deck panel ℄
** From interior face of barrier to outer edge of deck panel ℄

PLAN EXPANSION JOINT UPPER DECK

1:100

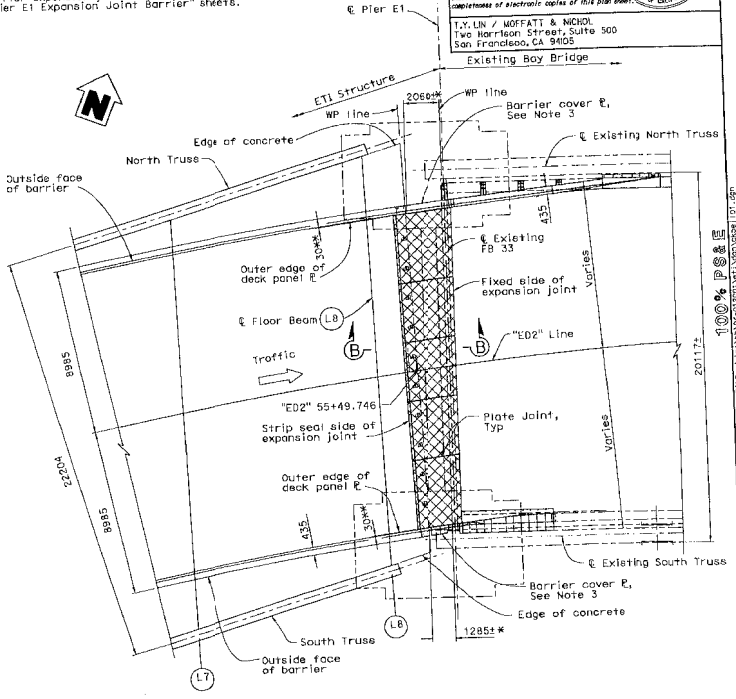

PLAN EXPANSION JOINT LOWER DECK

1:100

ALL DIMENSIONS ARE IN MILLIMETERS UNLESS OTHERWISE SHOWN

SAN FRANCISCO OAKLAND BAY BRIDGE
EAST SPAN SEISMIC SAFETY PROJECT

EAST TIE-IN

PIER E1 EXPANSION JOINT LAYOUT

T. Ostrom/M. Whiteside/A. Akinsanya	DESIGN	BY C. Redfield, R. Nutt	CHECKED S. Cheng
DESIGN OVERSIGHT	DETAILS	BY S. Lee, P. Zhao	CHECKED A. Lee
SIGN OFF DATE	QUANTITIES	BY H. Nelson	CHECKED A. Lee

DESIGN DETAIL SHEET (METRIC) REV. 3/1/08
DATE *TIME* Pen Table File

ORIGINAL SCALE IN MILLIMETERS FOR REDUCED PLANS 0 10 20 30 40 50 60 70 80 90 100

PREPARED FOR THE STATE OF CALIFORNIA DEPARTMENT OF TRANSPORTATION

M. Sah
PROJECT ENGINEER
S. Abbas
PROJECT MANAGER

CU
EA 0120R4

BRIDGE NO. 34-0006 (TEMP)
KILOMETER POST 12.6

DISREGARD PRINTS BEARING EARLIER REVISION DATES

REVISION DATES (PRELIMINARY STAGE ONLY)

SHEET 99 OF 214

FILE => p:\pb\04-012001\eti\dgn\dkpej101.dgn

USERNAME => ALee DATE PLOTTED => 5/9/2008 TIME PLOTTED => 3:51:51 PM FILE => p:\pb\04-012001\eti\dgn\dkpej101.dgn

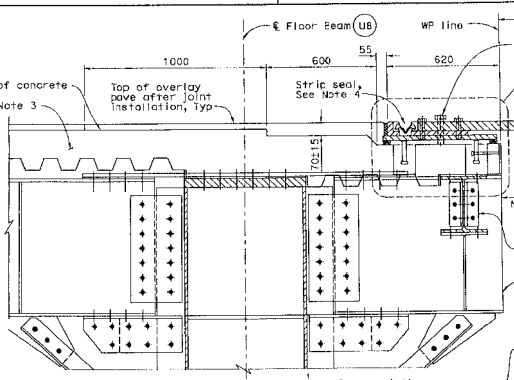

SECTION A-A
1:10

Expansion Joint in Upper Deck.

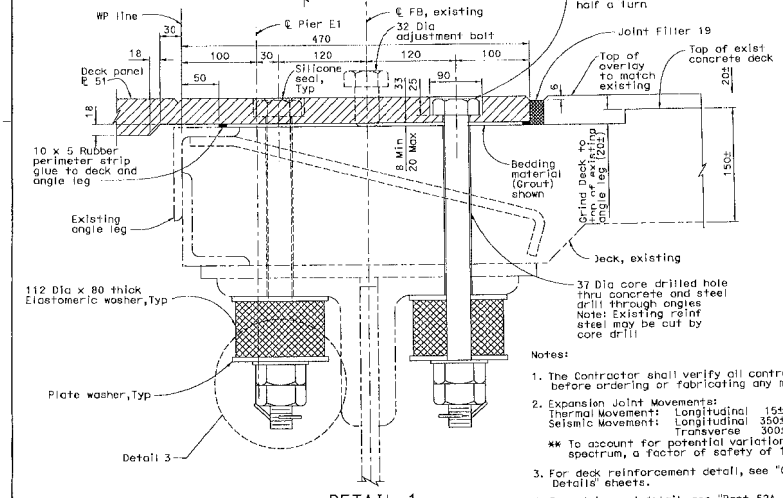

DETAIL 1
1:2.5

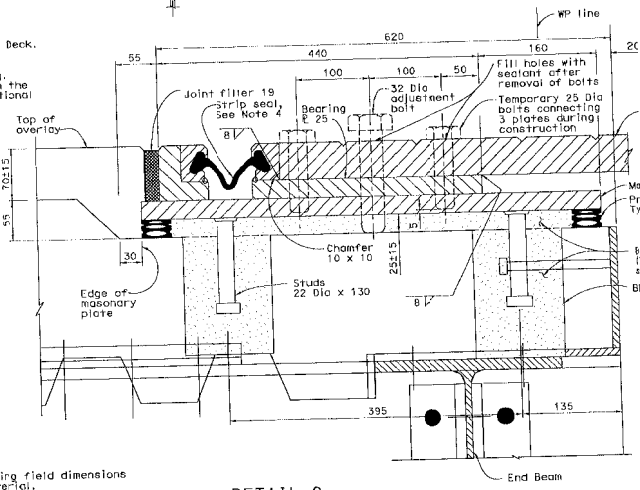

DETAIL 2
1:2.5

Notes:

1. The Contractor shall verify all controlling field dimensions before ordering or fabricating any material.
2. Expansion Joint Movements:
   Thermal Movement: Longitudinal 15±
   Seismic Movement: Longitudinal 350± **
   Transverse 300± **
   ** To account for potential variations in the response spectrum, a factor of safety of 1.5 has been applied.
3. For deck reinforcement detail, see "Concrete Deck Details" sheets.
4. For strip seal detail, see "Bent 52A Expansion Joint Details No. 3" sheet.
5. For End beam and stringers details, see "Stringer Details" sheets.
6. For Detail 3 and Detail 4 see "Bent 52A Expansion Joint Details No. 1" sheet.

LEGEND:

- - - - - Indicates existing structure

DIST	COUNTY	ROUTE	KILOMETER POST TOTAL PROJECT	SHEET NO.	TOTAL
04	SF	80	12.6/13.2		

REGISTERED CIVIL ENGINEER

5-12-08
PLANS APPROVAL DATE

Charles Redfield, No. C 21605, Exp. 12/31/09, CIVIL, State of California

The State of California or its officers or agents shall not be responsible for the accuracy or completeness of electronic copies of this plan sheet.

T.Y. LIN / MOFFATT & NICHOL
Two Harrison Street, Suite 500
San Francisco, CA 94105

ALL DIMENSIONS ARE IN MILLIMETERS UNLESS OTHERWISE SHOWN

CONTRACT NO. 04-0120R4

CONTRACT CHANGE ORDER NO 144-S1

DESIGN	BY C. Redfield, R. Nutt	CHECKED S. Cheng	
DETAILS	BY S. Lee, P. Zhao	CHECKED A. Lee	
QUANTITIES	BY H. Nelson	CHECKED A. Lee	

PREPARED FOR THE STATE OF CALIFORNIA DEPARTMENT OF TRANSPORTATION

M. Son, PROJECT ENGINEER
S. Abdou, PROJECT MANAGER

CU
EA 0120R4

BRIDGE NO. 34-0006 (T1&ME)
KILOMETER POST 12.6

SAN FRANCISCO OAKLAND BAY BRIDGE
EAST SPAN SEISMIC SAFETY PROJECT

EAST TIE-IN

PIER E1 EXPANSION JOINT DETAILS NO. 1

T. Ostrom/M. Whiteside/A. Akinsanya
DESIGN OVERSIGHT

SIGN OFF DATE

DESIGN DETAIL SHEET RETRO REV. 3/1/05
@DATE@ @TIME@ Pen Table File

SHEET 19 OF 23

ORIGINAL SCALE IN MILLIMETERS FOR REVISED PLANS 0 10 20 30 40 50 60 70 80 90 100

REVISION DATES (PRELIMINARY STAGE ONLY)

SHEET 100 OF 214

DIFFERENCE PRINTS REGARDING EARLIER REVISION DATES →

(FILE => p:\pb\04-012001\eff\dgn\ekpej001.dgn)

DATE PLOTTED => 5/9/2008
TIME PLOTTED => 3:51:13 PM
USERNAME => KLee
100% PSAE
(FILE => p:\pb\04-012001\eff\dgn\ekpej001.dgn)

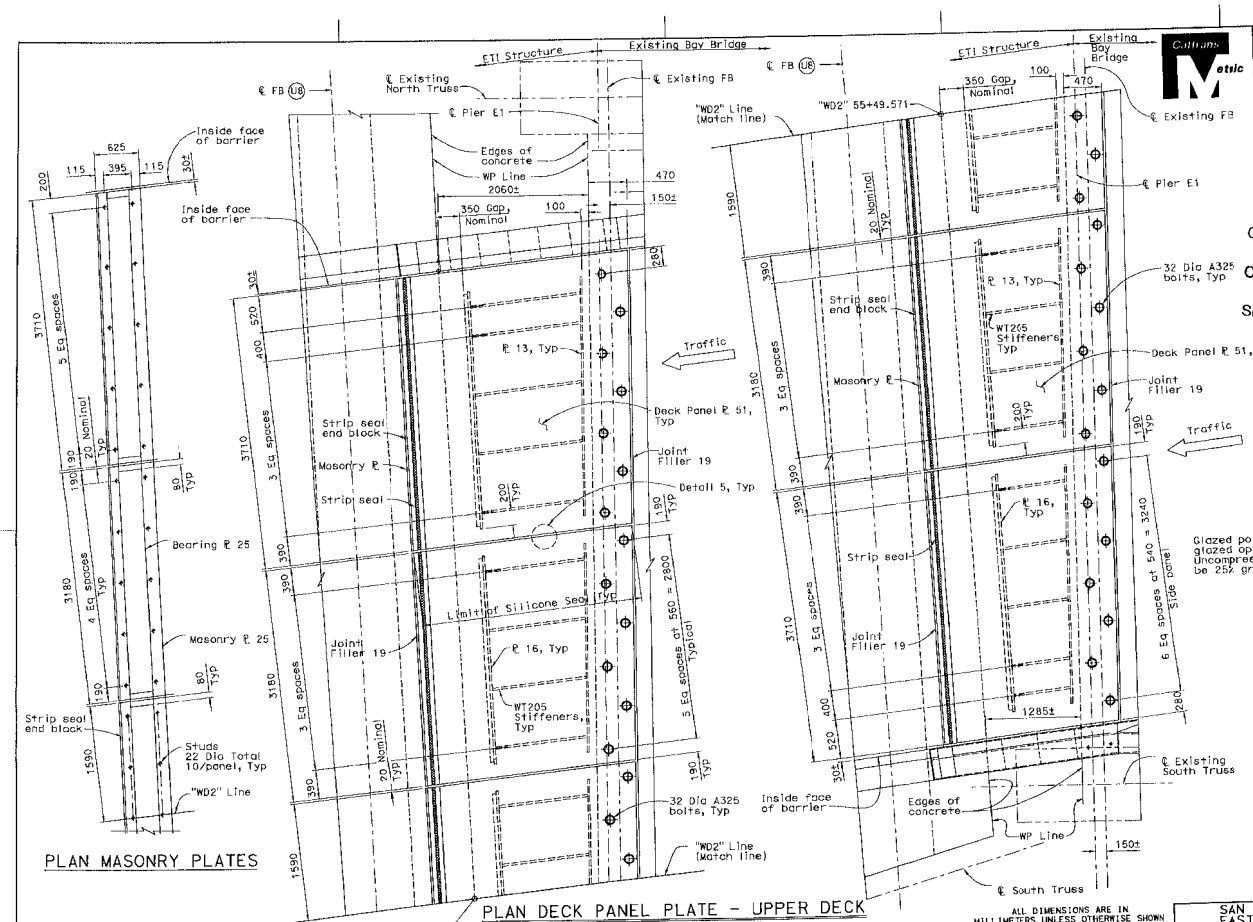

PLAN MASONRY PLATES

PLAN DECK PANEL PLATE - UPPER DECK

1:25 Gap not drawn to scale

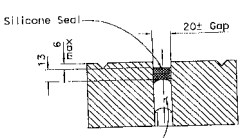

Glazed polyethylene foam or glazed open cell backer rod. Uncompressed width/dia to be 25% greater than actual gap.

DETAIL 5

NTS

LEGEND:

------ Indicates existing structure

Notes:

1. The Contractor shall verify all controlling field dimensions before ordering or fabricating any material.
2. Dimensions are given parallel to or perpendicular to "WD2" Line.
3. The stringers are not shown for clarity.
4. Direction of thermal movement.

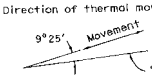

DIST	COUNTY	ROUTE	KILOMETER POST TOTAL PROJECT	SHEET NO	TOTAL
04	SF	80	12.6/13.2		

REGISTERED CIVIL ENGINEER

5-12-08

PLANS APPROVAL DATE

The State of California or its officers or agents shall not be responsible for the accuracy or completeness of electronic copies of this plan sheet.

REGISTERED PROFESSIONAL ENGINEER Charles Redfield No. C 27605 Exp. 12/31/08 CIVIL STATE OF CALIFORNIA

T.Y. LIN / MOFFATT & NICHOL
Two Harrison Street, Suite 500
San Francisco, CA 94105

CONTRACT NO. 04-0120R4

CONTRACT CHANGE ORDER NO. 144-S1

SHEET 20 of 23

100% PS&E

ALL DIMENSIONS ARE IN MILLIMETERS UNLESS OTHERWISE SHOWN

SAN FRANCISCO OAKLAND BAY BRIDGE
EAST SPAN SEISMIC SAFETY PROJECT

EAST TIE-IN

PIER E1 EXPANSION JOINT DETAILS NO. 2

T. Ostrom/M. Whiteside/A. Akinsanya
DESIGN OVERSIGHT

SIGN OFF DATE

DESIGN DETAIL SHEET (METRIC)(REV. 3/1/08)
DATE *TIME* Pen Table File

	BY	CHECKED
DESIGN	C. Redfield, R. Nutt	S. Cheng
DETAILS	S. Lee, P. Zhao	A. Lee
QUANTITIES	H. Nelson	A. Lee

ORIGINAL SCALE IN MILLIMETERS FOR REDUCED PLANS 0 10 20 30 40 50 60 70 80 90 100

PREPARED FOR THE STATE OF CALIFORNIA DEPARTMENT OF TRANSPORTATION

M. Sah
PROJECT ENGINEER
S. Abbas
PROJECT MANAGER

CU
EA 0120R4

BRIDGE NO. 34-0006 (TEMP)
KILOMETER POST 12.6

DISREGARD PRINTS BEARING EARLIER REVISION DATES

REVISION DATES (PRELIMINARY STAGE ONLY)

SHEET 101 OF 214

FILE => p:\bb\04-012001\eti\dgn\akpe\d02.dgn

FILE => p:\bb\04-012001\eti\dgn\akpe\d02.dgn

DATE PLOTTED => 5/9/2008 TIME PLOTTED => 3:31:39 PM

USERNAME => ALee

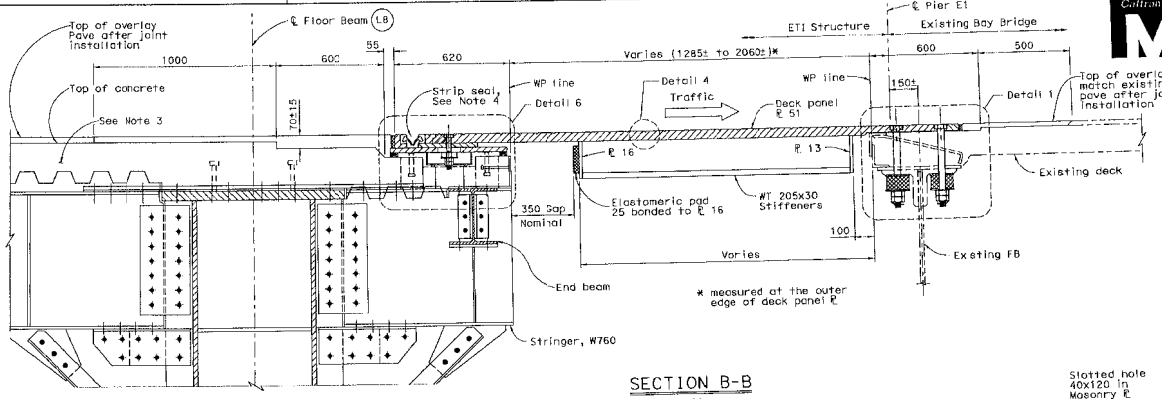

SECTION B-B

1:10

Expansion Joint in Lower Deck.

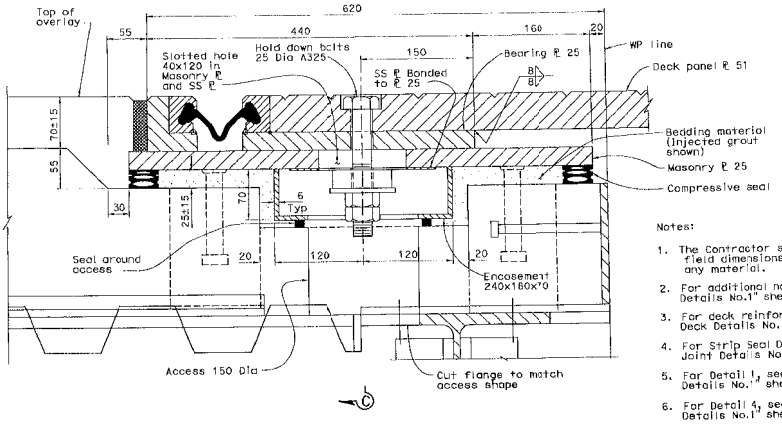

DETAIL 6

1:2.5

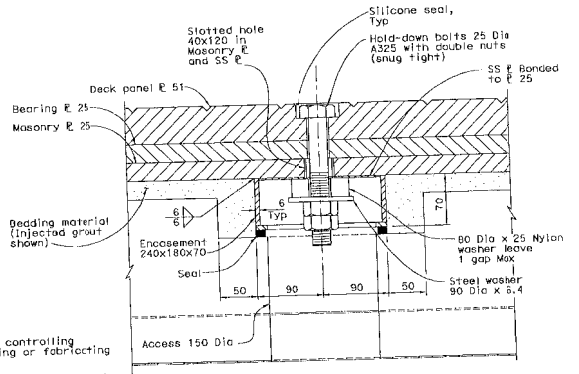

SECTION C-C

Notes:

1. The Contractor shall verify all controlling field dimensions before ordering or fabricating any material.
2. For additional notes, see "Pier E1 Expansion Joint Details No.1" sheet.
3. For deck reinforcement details see "Concrete Deck Details No. 2" sheet.
4. For Strip Seal Detail, see "Bent 52A Expansion Joint Details No. 3" sheet.
5. For Detail 1, see "Pier E1 Expansion Joint Details No.1" sheet.
6. For Detail 4, see "Bent 52A Expansion Joint Details No.1" sheet.

DIST	COUNTY	ROUTE	KILOMETER POST TOTAL PROJECT	SHEET NO	TOTAL
04	SF	80	12.6/13.2		

REGISTERED CIVIL ENGINEER

5-12-08

PLANS APPROVAL DATE

The State of California or its officers or agents shall not be responsible for the accuracy or completeness of electronic copies of this plan sheet.

REGISTERED PROFESSIONAL ENGINEER — Charles Redfield — No. C 27605 — Exp. 6/30/09 — CIVIL — STATE OF CALIFORNIA

T.Y.LIN / MOFFATT & NICHOL
Two Harrison Street, Suite 500
San Francisco, CA 94105

LEGEND:

——— Indicates existing structure

CONTRACT NO. 04-0120R4

CONTRACT CHANGE ORDER NO 144-S1

SHEET 21 OF 23

ALL DIMENSIONS ARE IN MILLIMETERS UNLESS OTHERWISE SHOWN

SAN FRANCISCO OAKLAND BAY BRIDGE
EAST SPAN SEISMIC SAFETY PROJECT

EAST TIE-IN

PIER E1 EXPANSION JOINT DETAILS NO. 3

T. Ostrom/M. Whiteside/A. Akinyanya	DESIGN OVERSIGHT		
SIGN OFF DATE			
DESIGN	BY C. Redfield, R. Nutt	CHECKED S. Cheng	
DETAILS	BY S. Lee, P. Zhao	CHECKED A. Lee	
QUANTITIES	BY H. Nelson	CHECKED A. Lee	

PREPARED FOR THE STATE OF CALIFORNIA DEPARTMENT OF TRANSPORTATION

M. Sch — PROJECT ENGINEER
S. Abbas — PROJECT MANAGER

BRIDGE NO. 34-0006
(TEMP)
KILOMETER POST 12.6

CU EA 0120R4

DESIGN DETAIL SHEET (METRIC) REV. 3/1/99
ADA Tc ø BY DATE ø Pen. Table File

ORIGINAL SCALE IN MILLIMETERS FOR REDUCED PLANS 0 10 20 30 40 50 60 70 80 90 100

DISREGARD PRINTS BEARING EARLIER REVISION DATES

REVISION DATES (PRELIMINARY STAGE ONLY)

SHEET 102 OF 214

FILE => p:\bo\04-012001\et1\dgn\akpe[d03.dgn

TIME PLOTTED => 3:55:42 PM

DATE PLOTTED => 5/9/2008

USERNAME => Alee

100% PS&E

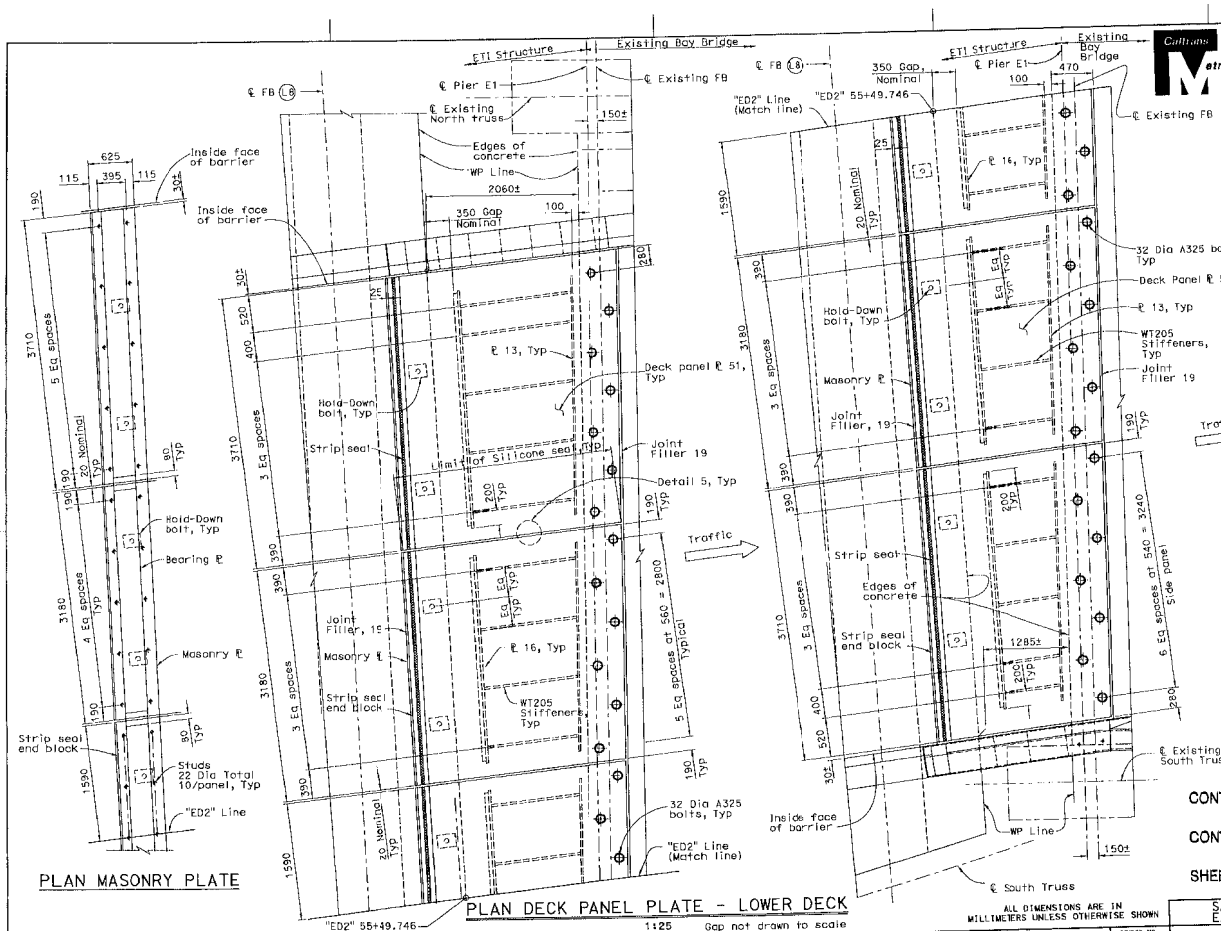

PLAN MASONRY PLATE

PLAN DECK PANEL PLATE - LOWER DECK

1:25 Gap not drawn to scale

DIST	COUNTY	ROUTE	KILOMETER POST TOTAL PROJECT	SHEET NO	TOTAL
04	SF	80	12.6/13.2		

REGISTERED CIVIL ENGINEER

5-12-08

PLANS APPROVAL DATE

The State of California or its officers or agents shall not be responsible for the accuracy or completeness of electronic copies of this plan sheet.

REGISTERED PROFESSIONAL ENGINEER Charles Redfield No. C 27605 Exp. 12/31/09 CIVIL STATE OF CALIFORNIA

T.Y. LIN / MOFFATT & NICHOL
Two Harrison Street, Suite 500
San Francisco, CA 94105

LEGEND:

Indicates existing structure

Notes:

1. The Contractor shall verify all controlling field dimensions before ordering or fabricating any material.
2. Dimensions are given parallel to or perpendicular to "ED2" Line.
3. The stringers are not shown for clarity.
4. For Detail 5, see "Pier E1 Expansion Joint Details No. 2" sheet.
5. Direction of thermal movement.

9°25' Movement "ED2" Line

CONTRACT NO. 04-0120R4

CONTRACT CHANGE ORDER NO 144-S1

SHEET 22 OF 23

ALL DIMENSIONS ARE IN MILLIMETERS UNLESS OTHERWISE SHOWN

SAN FRANCISCO OAKLAND BAY BRIDGE
EAST SPAN SEISMIC SAFETY PROJECT

EAST TIE-IN

PIER E1 EXPANSION JOINT DETAILS NO. 4

DESIGN	BY C. Redfield, R. Nutt	CHECKED S. Cheng	
DETAILS	BY S. Lee, P. Zhao	CHECKED A. Lee	
QUANTITIES	BY H. Nelson	CHECKED A. Lee	

PREPARED FOR THE STATE OF CALIFORNIA DEPARTMENT OF TRANSPORTATION

M. Sch
PROJECT ENGINEER
S. Abbas
PROJECT MANAGER

BRIDGE NO. 34-0006 (TEMP)
KILOMETER POST 12.6

CU
EA 0120R4

DISREGARD PRINTS BEARING EARLIER REVISION DATES

REVISION DATES (PRELIMINARY STAGE ONLY)

SHEET 103 OF 214

Y. Ostrom/M. Whiteside/A. Akinsanya
DESIGN OVERSIGHT

SIGN OFF DATE

DESIGN DETAIL SHEET METRIC(REV. 3/1/98)
#DATE# #TIME# Pen Table File

ORIGINAL SCALE IN MILLIMETERS FOR REDUCED PLANS 0 10 20 30 40 50 60 70 80 90 100

FILE => p:\bb\04-0120D1\etl\dgn\akpej004.dgn

100% PS&E

FILE => p:\bb\04-0120D1\etl\dgn\akpej004.dgn

DATE PLOTTED => 5/9/2008 TIME PLOTTED => 3:51:45 PM

USERNAME => ALee

DIST	COUNTY	ROUTE	KILOMETER POST TOTAL PROJECT	SHEET No.	TOTAL
04	SF	80	12.6/13.2		

REGISTERED CIVIL ENGINEER — Charles Redfield, No. C 27605, Exp. 12/31/09, CIVIL, State of California

5-12-08
PLANS APPROVAL DATE

The State of California or its officers or agents shall not be responsible for the accuracy or completeness of electronic copies of this plan sheet.

T.Y. LIN / MOFFATT & NICHOL
Two Harrison Street, Suite 500
San Francisco, CA 94105

CONTRACT NO. 04-0120R4

CONTRACT CHANGE ORDER NO 144-51

SHEET 23 OF 23

100% PS&E

SLIDING SIDE
ETI STRUCTURE

FIXED SIDE
EXISTING BAY BRIDGE

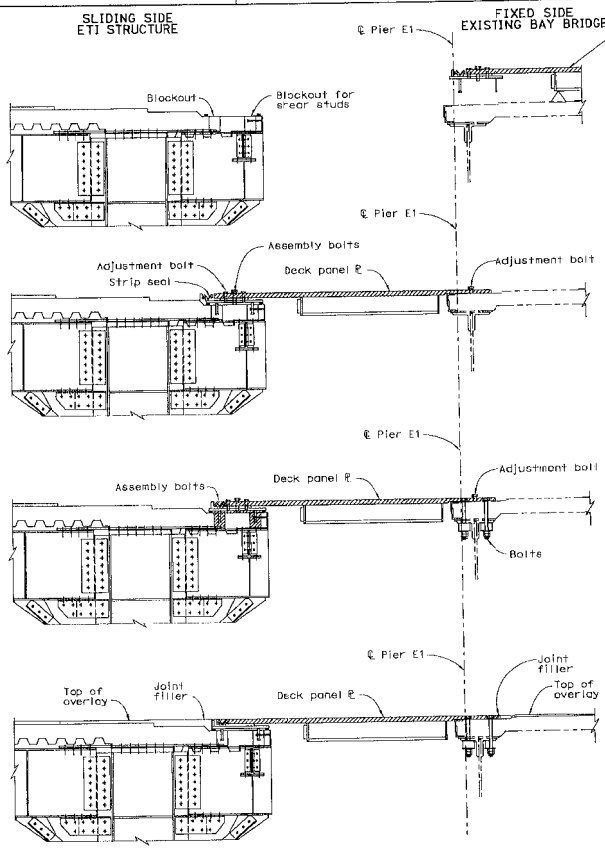

Note: Sequence shown for use of injected grout as bedding material.

Phase 1: - Joint situation at completion of Roll-in operation.
1. Deck on sliding side prepared with blockouts to receive the masonry plate and the vertical shear studs.
2. Existing expansion joint has been removed with roll-out of existing YB4 span.
3. Expose concrete surface on the fixed side, cut back asphalt overlay and concrete surface.
   a. Strip seal and block welded to masonry plate. Set correct gap for anticipated installation temperatures. Set for each individual plate assembly.
   b. Strip seals installed in each individual plate assembly.
4. Place deck panel plate assemblies for the Pier E1 expansion joint on the existing cantilever span side prior to Roll-Out-Roll-In operation. The assemblies consist of prefabricated and pre-positioned bearing and masonry plates and completed strip seals.

Phase 2: - Place leveling grout on the fixed side.
- Place excess thickness of grout as approved by the Engineer.
- Place all five deck panel assemblies in positon across joint opening.
- Lower the plates into the grout on the fixed side with adjustment bolts.
- Adjust deck panel plates to achieve best fit with plan and profile.
- Fix panel height on the sliding side with use of the adjustment bolts.
- Ensure that the perimeter around the areas to be grouted are properly sealed.

Phase 3: - Inject fast setting grout under low pressure on the sliding side.
- Install bolting on the fixed side as follows:
1. Withdraw the plastic dowels from the holes, once the grout has set enough to not flow.
2. Field drill through the holes into the existing concrete deck and flange angle below.
3. Insert and tighten the Tie-down bolts using the neoprene washer assemblies and lock nuts.
4. Complete all bolts on the fixed side. (total 32 bolts per expansion joint)

Phase 4: - After the grout has achieved initial set, extract the assembly bolts and fill holes with sealant.
- Remove the adjustment bolts and fill holes with sealant.
- Place joint filler strip elements on each side of the expansion joint assemblies.
- Place remainder of overlay on each side of the expansion joints feathering to the finished pavement.
- Place silicone seal between deck panel plates.
- Clean up.

Notes:
1. Construction sequence shown for the Pier E1 expansion joint in the upper deck with traffic towards San Francisco. Construction sequence for the Pier E1 expansion joint in the lower deck with traffic towards Oakland, similar.
2. Deck panel assembly weight, including bearing and masonary plates, strip seals and stiffeners is approximately between 5.0 tons and 6.0 tons.
3. To expedite the construction sequence and to maximize efficiency, the Contractor shall provide separate work teams, fully equiped with personnel and equipment, dedicated for each expansion joint location.
4. The Contractor to provide temporary bridges to allow equipment to cross during bedding material curing time without loading the expansion joint plates.

CONSTRUCTION SEQUENCE

Expansion Joint at Pier E1
NTS

ALL DIMENSIONS ARE IN MILLIMETERS UNLESS OTHERWISE SHOWN

SAN FRANCISCO OAKLAND BAY BRIDGE
EAST SPAN SEISMIC SAFETY PROJECT

EAST TIE-IN

PIER E1 EXPANSION JOINT DETAILS NO. 5

T. Ostrom/W. Whiteside/A. Aklnsanya	DESIGN	BY C. Redfield, R. Nutt	CHECKED S. Chang	PREPARED FOR THE STATE OF CALIFORNIA DEPARTMENT OF TRANSPORTATION	W. Soh PROJECT ENGINEER
DESIGN OVERSIGHT	DETAILS	BY S. Lee, P. Zhao	CHECKED A. Lee		S. Abbas PROJECT MANAGER
SIGN OFF DATE	QUANTITIES	BY N. Nelson	CHECKED A. Lee		CU EA 0120R4

BRIDGE NO. 34-0006 (TEMP)
KILOMETER POST 12.6

STANDARD PRINTS BEARING EARLIER REVISION DATES → 12/30/07 5/5/08 5/5/08

REVISION DATES (PRELIMINARY STAGE ONLY)

SHEET 104 OF 214

DESIGN DETAIL SHEET (METRIC) REV. 3/1/98
#DATE# #TIME# Pen Table File

ORIGINAL SCALE IN MILLIMETERS
FOR REDUCED PLANS 0 10 20 30 40 50 60 70 80 90 100

FILE => p:\bb\04-012001\eff\dgn\akpe1d05.dgn

DATE PLOTTED => 5/5/2008 TIME PLOTTED => 3:51:48 PM

USERNAME => Alcer

STATE OF CALIFORNIA - DEPARTMENT OF TRANSPORTATION

CONTRACT CHANGE ORDER MEMORANDUM

TO: MIKE FORNER / DEANNA VILCHECK	FILE: **E.A.** 04 - 0120R4
FROM: BILL CASEY	**CO-RTE-PM** SF-80-12.6/13.2
	FED. NO. ACBRIM-080-1(097)N
CCO#: **144** SUPPLEMENT#: **1** Category Code: **CHPA**	CONTINGENCY BALANCE (incl. this change) **$72,297,134.05**
COST: **$2,900,000.00** INCREASE ☑ DECREASE ☐	HEADQUARTERS APPROVAL REQUIRED? ☑ YES ☐ NO
SUPPLEMENTAL FUNDS PROVIDED: **$0.00**	IS THIS REQUEST IN ACCORDANCE WITH ENVIRONMENTAL DOCUMENTS? ☑ YES ☐ NO
CCO DESCRIPTION: ETI Fabricate Expansion Joints	**PROJECT DESCRIPTION:** CONSTRUCT ROUTE 80 TEMP BYPASS STRUCTURE

Original Contract Time:	Time Adj. This Change:	Previously Approved CCO Time Adjustments:	Percentage Time Adjusted: (including this change)	Total # of Unreconciled Deferred Time CCO(s): (including this change)
475 Day(s)	**DEF** Day(s)	**1195** Day(s)	**252** %	**8**

THIS CHANGE ORDER PROVIDES FOR:

compensation to the contractor for all costs involved in furnishing, fabricating, machining, prime painting, and delivering to the project site, East Tie In expansion joints.

This contract provides for the construction of a temporary detour for both eastbound and westbound I-80 traffic that allows for the tie in of the east span of the new San Francisco Oakland Bay Bridge (SFOBB) to Yerba Buena Island. The detour will allow for the construction of the permanent structure, the Yerba Buena Island Transition Structure, which connects the signature SAS structure to Yerba Buena Island.

The detour consist of three main structures, the East Tie-In (ETI) to the bridge, the West Tie-In to the island and the Viaduct structure between the two tie ins. The contract was awarded as a performance based project with the contractor responsible for meeting the design criteria specified in the contract.

A December 14, 2006 Department strategy memorandum, approved by Tony Anziano, Toll Bridge Program Manager, and Richard Land, Chief Engineer, recommended that the Department assume the design responsibility for the East Tie-In (ETI) structure. Based on this memorandum, the design of the structure was changed from a design that incorporated the existing steel truss bridge with the new structure to a design that replaces the existing structure with a new structure (roll out / roll in).

The new ETI design requires the fabrication and installation of 4 expansion joints, each approximately 18 meters long and 3 meters wide, where the upper and lower decks conform to the Viaduct structure and the existing SFOBB. These 4 joints need to be installed during the anticipated full weekend closure of the SFOBB when the existing span is rolled out and the new detour span is rolled in. This makes the installation of the expansion joints critical in avoiding a late opening of the weekend closure. The original CCO 144-S0 provided for the early procurement of the steel plate material required for the fabrication of the 4 expansion joints.

This work will be paid for as Extra Work at Force for an estimated cost of $2,900,000.00 which will be funded through the available contingency balance. A cost analysis is on file.

Adjustment of contract time is deferred pending completion of the work specified in this change as it may become the controlling operation in accordance with Section 8-1.07 "Liquidated Damages", of the Standard Specifications and Section 10-1.20 "Time Related Overhead (TRO)" of the Special Provisions.

Compensation for delays resulting from this work will be made in accordance with Section 8-1.09 "Right of Way Delays" of the Standard Specifications and Section 10-1.20 "Time Related Overhead" of the Special Provisions.

This change was requested by Mike Whiteside - YBI Coordination Engineer per memorandum dated May 13, 2008 and concurred by Hong Wong - Project Engineer, Alec Melkonians - Asst. Project Manager, and Lina Ellis - Structure Maintenance.

ADA Notice: For individuals with sensory disabilities, this document is available in alternate formats. For information call: (916) 654-6410 or TDD (916) 654-3880 or write Records and Forms Management, 1120 N Street, MS-89, Sacramento, CA 95814.

CONTRACT CHANGE ORDER MEMORANDUM

CONCURRED BY:			
Construction Engineer:	Bill Casey, Resident Engineer	Date	1-30-09
Bridge Engineer:	Mike Whiteside, Toll Bridge Design	Date	5/13/08
Project Engineer:	Hong Wong, PE	Date	1/28/09
Project Manager:	Alec Melkonians	Date	1/26/09
FHWA Rep.:		Date	
Environmental:		Date	
Other (specify):	Patrick Treacy, HQ Asst.Const.Co	Date	1/26/09
Other (specify):	Lina Ellis, Struc. Maintenance	Date	1/27/09
District Prior Approval By:		Date	
HQ (Issue Approve) By:	Bob Molera, HQ CCO Engineer	Date	2/3/09
Resident Engineer's Signature:		Date	1-30-09

ESTIMATE OF COST

	THIS REQUEST	TOTAL TO DATE
ITEMS	$0.00	$0.00
FORCE ACCOUNT	$2,900,000.00	$3,750,000.00
AGREED PRICE	$0.00	$0.00
ADJUSTMENT	$0.00	$0.00
TOTAL	$2,900,000.00	$3,750,000.00

FEDERAL PARTICIPATION

☐ PARTICIPATING ☐ PARTICIPATING IN PART ☐ NONE
☐ NON-PARTICIPATING (MAINTENANCE) ☑ NON-PARTICIPATING

FEDERAL SEGREGATION (if more than one Funding Source or P.I.P. type)
☐ CCO FUNDED PER CONTRACT ☐ CCO FUNDED AS FOLLOWS

FEDERAL FUNDING SOURCE	PERCENT

ADA Notice: For individuals with sensory disabilities, this document is available in alternate formats. For information call: (916) 654-6410 or TDD (916) 654-3880 or write Records and Forms Management, 1120 N Street, MS-89, Sacramento, CA 95814.

STATE OF CALIFORNIA - DEPARTMENT OF TRANSPORTATION

CONTRACT CHANGE ORDER

Change Requested by: Engineer

CCO 144	Suppl. No. 2	Contract No. 04 - 0120R4	Road SF-80-12.6/13.2	FED. AID LOC.: ACBRIM-080-1(097)N

To: **CC MYERS INC**

You are directed to make the following changes from the plans and specifications or do the following described work not included in the plans and specifications for this contract. ***NOTE: This change order is not effective until approved by the Engineer.***

Description of work to be done, estimate of quantities and prices to be paid. (Segregate between additional work at contract price, agreed price and force account.) Unless otherwise stated, rates for rental of equipment cover only such time as equipment is actually used and no allowance will be made for idle time. This last percentage shown is the net accumulated increase or decrease from the original quantity in the Engineer's Estimate.

Incorporate the changes to the expansion joints at Bent 52A and Pier E1 of the East Tie-In portion of the Temporary Bypass Structure (Bridge No. 34-0006 (TEMP)) as shown in the revised plan sheets of Sheets No. 2 through 14 of this change order.

All revisions to the expansion joints shown on Sheets No. 2 through 14 of this change order shall supersede the original plan sheets issued under Change Order No. 144, Supplement No. 1.

Compensation for any costs resulting from the changes incorporated under this change order shall be paid as extra work at force account as previously provided under Contract Change Order No. 144, Supplement No. 1.

RECEIVED
09 OCT -8 AM 10:03

Estimated Cost: **Increase** ☐ **Decrease** ☐ **$0.00**

By reason of this order the time of completion will be adjusted as follows: Deferred

Submitted by		
Signature	**Resident Engineer** BILL CASEY	**Date** 6-30-09
Approval Recommended by		
Signature Michael Forner	**SFOBB Construction Manager** MIKE FORNER	**Date** 7-1-09
Engineer Approval by		
Signature Mike Forner	**SFOBB Construction Manager** MIKE FORNER	**Date** 7/16/09

We the undersigned contractor, have given careful consideration to the change proposed and agree, if this proposal is approved, that we will provide all equipment, furnish the materials, except as may otherwise be noted above, and perform all services necessary for the work above specified, and will accept as full payment therefor the prices shown above.

NOTE: If you, the contractor, do not sign acceptance of this order, your attention is directed to the requirements of the specifications as to proceeding with the ordered work and filing a written protest within the time therein specified.

Contractor Acceptance by		
Signature	**(Print name and title)** STEVE FRANCIS, CHIEF ESTIMATOR	**Date** 7.14.09

LEGEND:

Indicates steel deck plate with V-grooves at ±45°.

Notes:

1. The Contractor shall verify all controlling field dimensions before ordering or fabricating any material.
2. For Sections A-A and B-B, see "Bent 52A Expansion Joint Details No. 1" and "Bent 52A Expansion Joint Details No. 3" sheet.
3. For Fuse Panel details, see "Bent 52A Expansion Joint Details No. 5" sheet.
4. For Barrier expansion joint and cover ℄ details, see "Bent 52A Expansion Joint Barriers" sheets.

CONTRACT NO. 04-0120R4

CONTRACT CHANGE ORDER NO. 144-S2

SHEET 2 OF 15

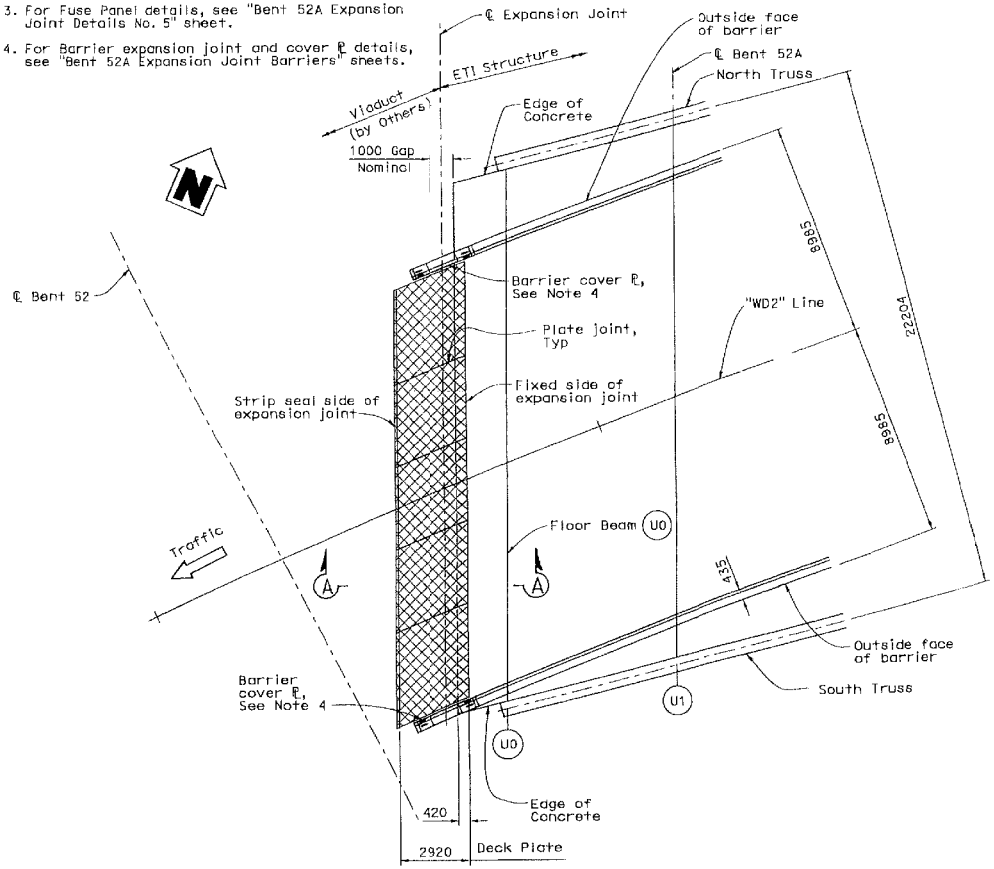

PLAN EXPANSION JOINT UPPER DECK

1:100

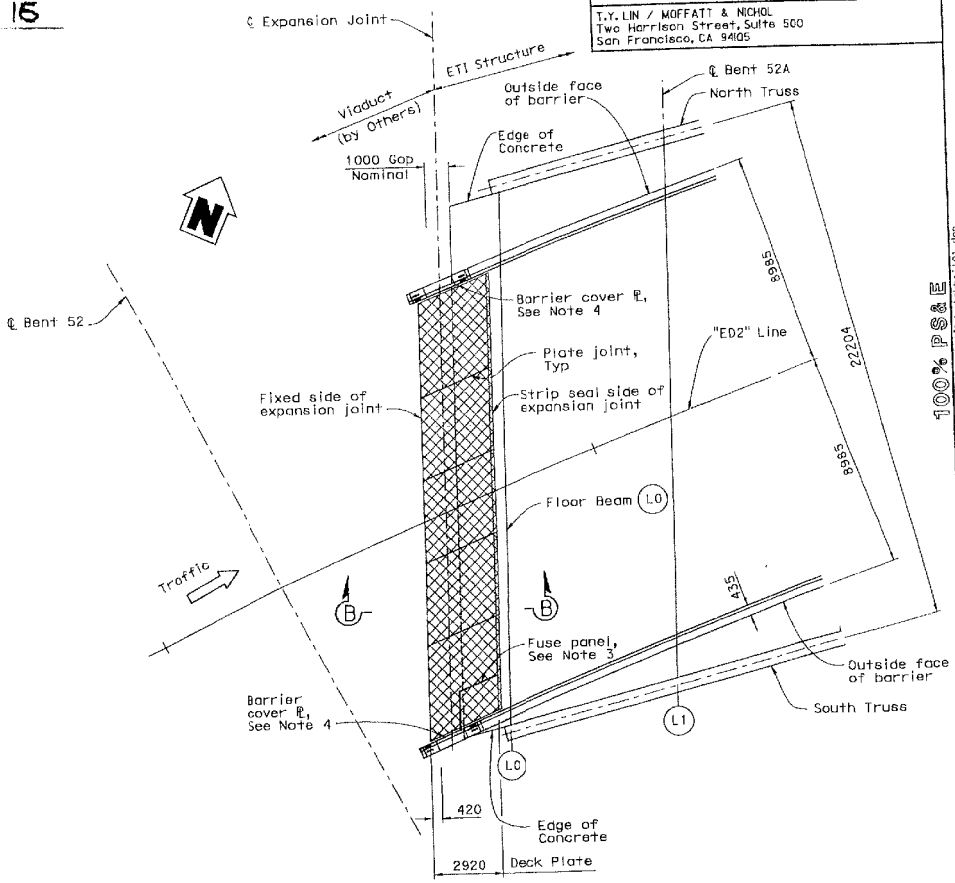

PLAN EXPANSION JOINT LOWER DECK

1:100

ALL DIMENSIONS ARE IN MILLIMETERS UNLESS OTHERWISE SHOWN

DIST	COUNTY	ROUTE	KILOMETER POST TOTAL PROJECT	SHEET NO.	TOTAL
04	SF	80	12.6/13.2		

REGISTERED CIVIL ENGINEER

5-12-08
PLANS APPROVAL DATE

Registered Professional Engineer — Charles Redfield — No. C 27605 — Exp. 12/31/09 — CIVIL — State of California

The State of California or its officers or agents shall not be responsible for the accuracy or completeness of electronic copies of this plan sheet.

T.Y. LIN / MOFFATT & NICHOL
Two Harrison Street, Suite 500
San Francisco, CA 94105

SAN FRANCISCO OAKLAND BAY BRIDGE
EAST SPAN SEISMIC SAFETY PROJECT

EAST TIE-IN

BENT 52A EXPANSION JOINT LAYOUT

T. Ostrom/M. Whiteside/A. Akinsanya	DESIGN	C. Redfield, R. Nutt	S. Cheng
DESIGN OVERSIGHT	DETAILS	S. Lee, P. Zhao	A. Lee
SIGN OFF DATE	QUANTITIES	H. Nelson	A. Lee

PREPARED FOR THE STATE OF CALIFORNIA
DEPARTMENT OF TRANSPORTATION

M. Soh	PROJECT ENGINEER
S. Abbas	PROJECT MANAGER
CU	
EA 0120R4	

BRIDGE NO. 34-0006 (TEMP)
KILOMETER POST 12.6

DISREGARD PRINTS BEARING EARLIER REVISION DATES

REVISION DATES (PRELIMINARY STAGE ONLY)

SHEET 90 OF 214

DESIGN DETAIL SHEET (METRIC) REV. 3/1/98
@DATE= @TIME= Pen Table File

ORIGINAL SCALE IN MILLIMETERS FOR REDUCED PLANS 0 10 20 30 40 50 60 70 80 90 100

FILE => p:\bb\04-012001\etl\dgn\okbe]101.dgn

100% PS&E

DATE PLOTTED => 5/9/2008 TIME PLOTTED => 3:51:11 PM

USERNAME => Alee

MARK	DATE	REVISIONS DESCRIPTIONS	BY	CH'D	CCO#
2	3/05/09	UPDATE TO MATCH VIADUCT	CR	AML	
1	9/30/08	ELIMINATE DECK OVERLAY	MC	SA	
3	5/15/09	REVISE BOLT BOX DETAILS	CR	MC	

CONTRACT CHANGE ORDER NO. 144-S2
SHEET 3 OF 15

Caltrans Metric

REGISTERED PROFESSIONAL ENGINEER — Charles Redfield No. C 27865 — Exp. 12/31/09 — CIVIL — STATE OF CALIFORNIA

5-12-09
PLANS APPROVAL DATE

The State of California or its officers or agents shall not be responsible for the accuracy or completeness of electronic copies of this plan sheet.

T.Y. LIN / MOFFATT & NICHOL
Two Harrison Street, Suite 500
San Francisco, CA 94105

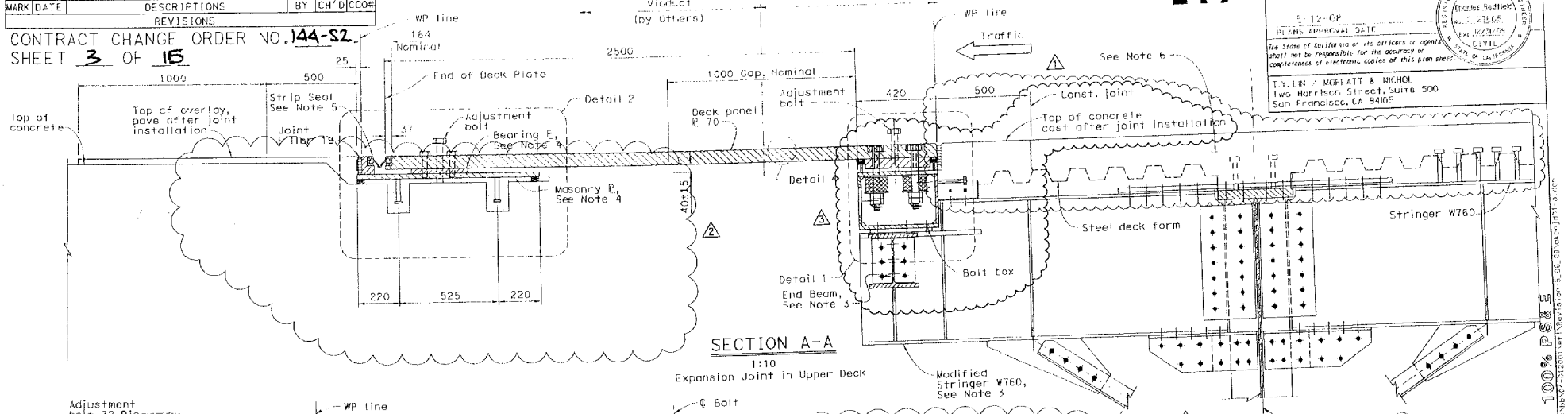

SECTION A-A
1:10
Expansion Joint in Upper Deck

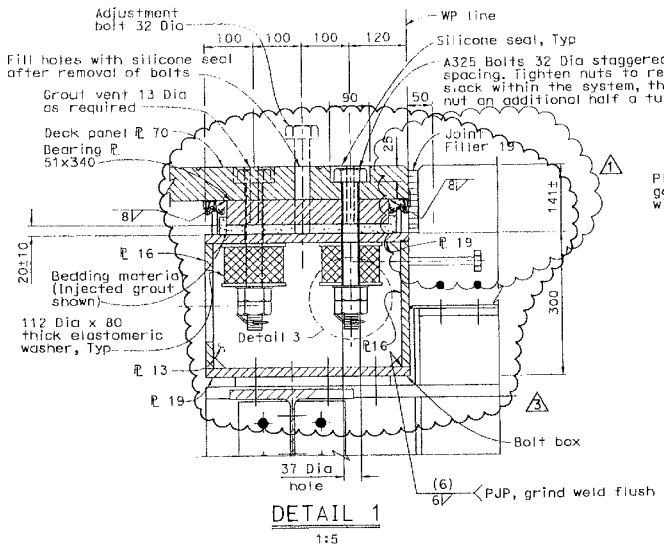

DETAIL 1
1:5

Note: Detail drawn for upper deck expansion joint. Detail for lower deck expansion joint similar.

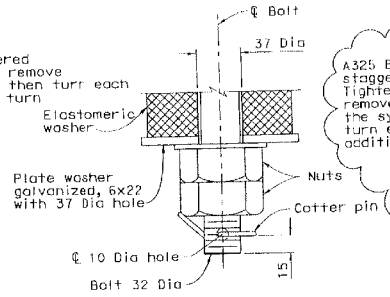

DETAIL 3
No Scale

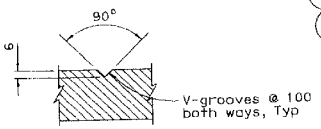

DETAIL 4
No Scale

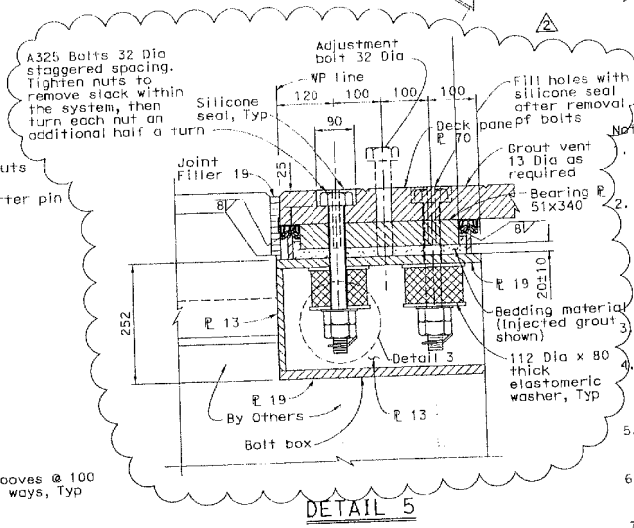

DETAIL 5
1:5

Notes:

1. The Contractor shall verify all controlling field dimensions before ordering or fabricating any material.
2. Expansion Joint Movements:
   Thermal Movement: Longitudinal 40± mm
   Seismic Movement: Longitudinal 1000± mm *
   Transverse 1075± mm *
   * To account for potential variations in the response spectrum, a factor of safety of 1.5 has been applied and included in these values.
3. For end beam and stringer, see "Stringer Details" sheets.
4. Masonry and bearing plates fixed to Deck Panel plates and to be released upon completion of installation and grouting after initial set is achieved.
5. For strip seal detail, see "Bent 52A Expansion Joint Details No. 3" sheet.
6. For deck reinforcement details, see "Concrete Deck Details" sheets.
7. For Detail 2, see "Bent 52A Expansion Joint Details No. 3" sheet.

ALL DIMENSIONS ARE IN MILLIMETERS UNLESS OTHERWISE SHOWN

SAN FRANCISCO OAKLAND BAY BRIDGE
EAST SPAN SEISMIC SAFETY PROJECT

EAST TIE-IN

BENT 52A EXPANSION JOINT DETAILS NO. 1

T. Ostrom/M. Whiteside/A. Akinsanya	DESIGN	BY C. Redfield, R. Nutt	CHECKED S. Cheng
DESIGN OVERSIGHT	DETAILS	BY S. Lee, P. Zhao	CHECKED A. Lee
SIGN OFF DATE	QUANTITIES	BY H. Nelson	CHECKED A. Lee

PREPARED FOR THE STATE OF CALIFORNIA
DEPARTMENT OF TRANSPORTATION

M. Soh, PROJECT ENGINEER
S. Abbas, PROJECT MANAGER
CU
EA 0120R4

BRIDGE NO. 34-0006 (TEMP)
KILOMETER POST 12.6

DISREGARD PRINTS BEARING EARLIER REVISION DATES

REVISION DATES (PRELIMINARY STAGE ONLY): 11/2008 4/2008 5/2008 5/2008 5/2008 5/15/2009

SHEET 91R3 214

DESIGN DETAIL SHEET (METRIC) REV. 3/1/98
#DATE# #TIME# Pen Table File

ORIGINAL SCALE IN MILLIMETERS FOR REDUCED PLANS 0 10 20 30 40 50 60 70 80 90 100

FILE =>j:\bb\04-012001\et1\Revision-5_06_09\okbej01-a.dgn

DATE PLOTTED => 5/15/2009 TIME PLOTTED => 2:56:43 PM

USERNAME => Alee

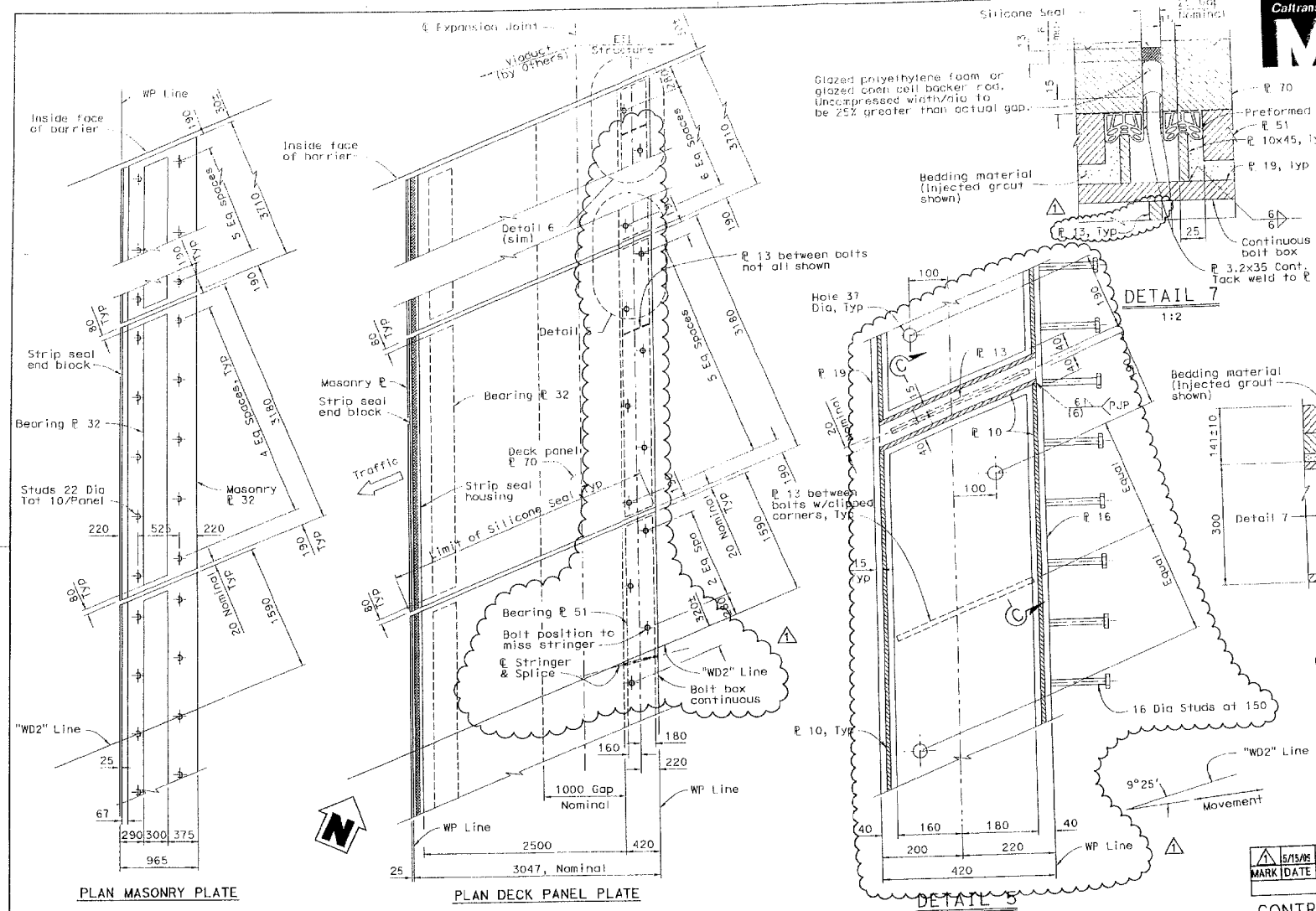

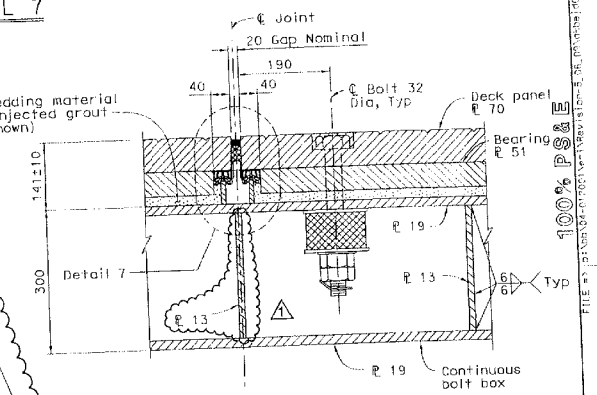

SECTION C-C
1:5

PLAN MASONRY PLATE

PLAN DECK PANEL PLATE

TYPICAL PANELS - UPPER DECK
1:25

Panels to the left of "WD2" line shown
Panels to the right of "WD2" line similar
Gap not drawn to scale

Detail drawn for Expansion Joint Upper Deck
Detail for Expansion Joint Lower Deck similar
Plan view of Bolt box below Deck panel

ALL DIMENSIONS ARE IN MILLIMETERS UNLESS OTHERWISE SHOWN

Notes:

1. The Contractor shall verify all controlling field dimensions before ordering or fabricating any material.
2. Dimensions are given parallel to or perpendicular to "WD2" Line.
3. The stringers are not shown for clarity.
4. For Detail 6, see "Bent 52A Expansion Joint Details No. 4" sheet.
5. Direction of thermal movement.

MARK	DATE	DESCRIPTIONS	BY	CH'D	CCO#
1	5/15/09	REVISE BOLT BOX DETAILS	CR	MC	

REVISIONS

CONTRACT CHANGE ORDER NO. 144-S2
SHEET 4 OF 16

SAN FRANCISCO OAKLAND BAY BRIDGE
EAST SPAN SEISMIC SAFETY PROJECT

EAST TIE-IN

BENT 52A EXPANSION JOINT DETAILS NO. 2

DIST	COUNTY	ROUTE	KILOMETER POST TOTAL PROJECT	SHEET NO.	TOTAL
04	SF	80	12.6/13.2		

REGISTERED CIVIL ENGINEER
5-12-08
PLANS APPROVAL DATE

The State of California or its officers or agents shall not be responsible for the accuracy or completeness of electronic copies of this plan sheet.

REGISTERED PROFESSIONAL ENGINEER
Charles Redfield
No. C 27605
Exp. 12/31/09
CIVIL
STATE OF CALIFORNIA

T.Y.LIN / MOFFATT & NICHOL
Two Harrison Street, Suite 500
San Francisco, CA 94105

Caltrans Metric

T. Ostrom/M. Whiteside/A. Akinsanya
DESIGN OVERSIGHT
SIGN OFF DATE

	BY	CHECKED
DESIGN	C. Redfield, R. Nutt	S. Cheng
DETAILS	S. Lee, P. Zhao	A. Lee
QUANTITIES	H. Nelson	A. Lee

PREPARED FOR THE STATE OF CALIFORNIA DEPARTMENT OF TRANSPORTATION

M. Soh
PROJECT ENGINEER
S. Abbas
PROJECT MANAGER

BRIDGE NO. 34-0006 (TEMP)
KILOMETER POST 12.6

CU
EA 0120R4

DISREGARD PRINTS BEARING EARLIER REVISION DATES

REVISION DATES (PRELIMINARY STAGE ONLY)

SHEET 92R1 OF 214

DESIGN DETAIL SHEET (METRIC) (REV. 3/1/98)
#DATE# #TIME# Pen Table File

ORIGINAL SCALE IN MILLIMETERS FOR REDUCED PLANS 0 10 20 30 40 50 60 70 80 90 100

FILE => p:\bb\04-012001\eti\Revision-5_06_09\okbejd02.dgn

100% PS&E

DATE PLOTTED => 5/15/2009
TIME PLOTTED => 2:56:47 PM
USERNAME => ALee

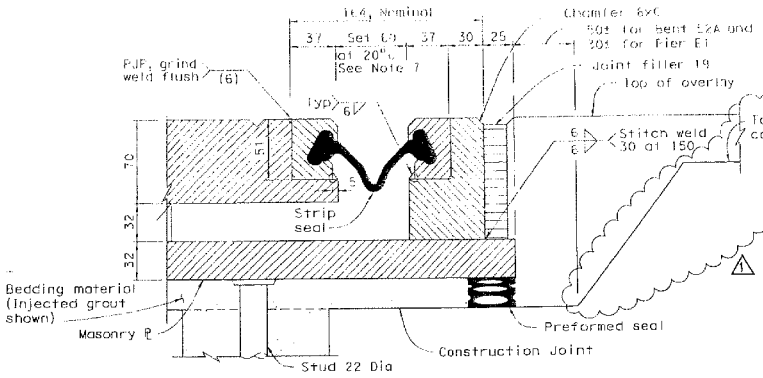

STRIP SEAL DETAIL

1:2

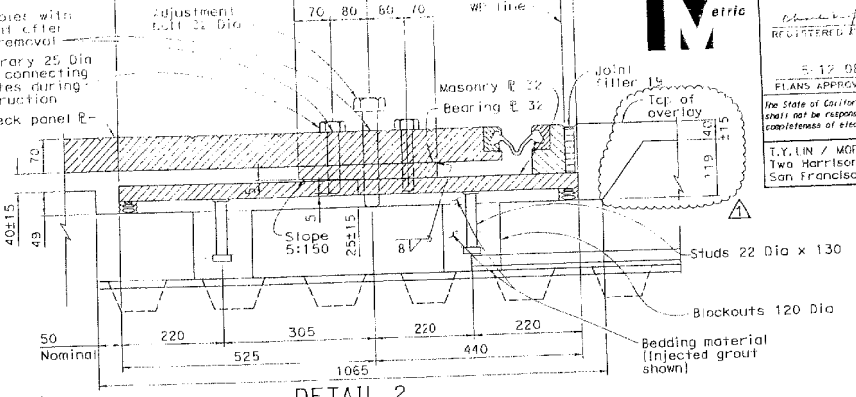

DETAIL 2

1:5

Detail drawn for Expansion Jt at Bent 52A. For detail variation at Pier E1, see " Pier E1 Expansion Joint Details No. 1" sheet.

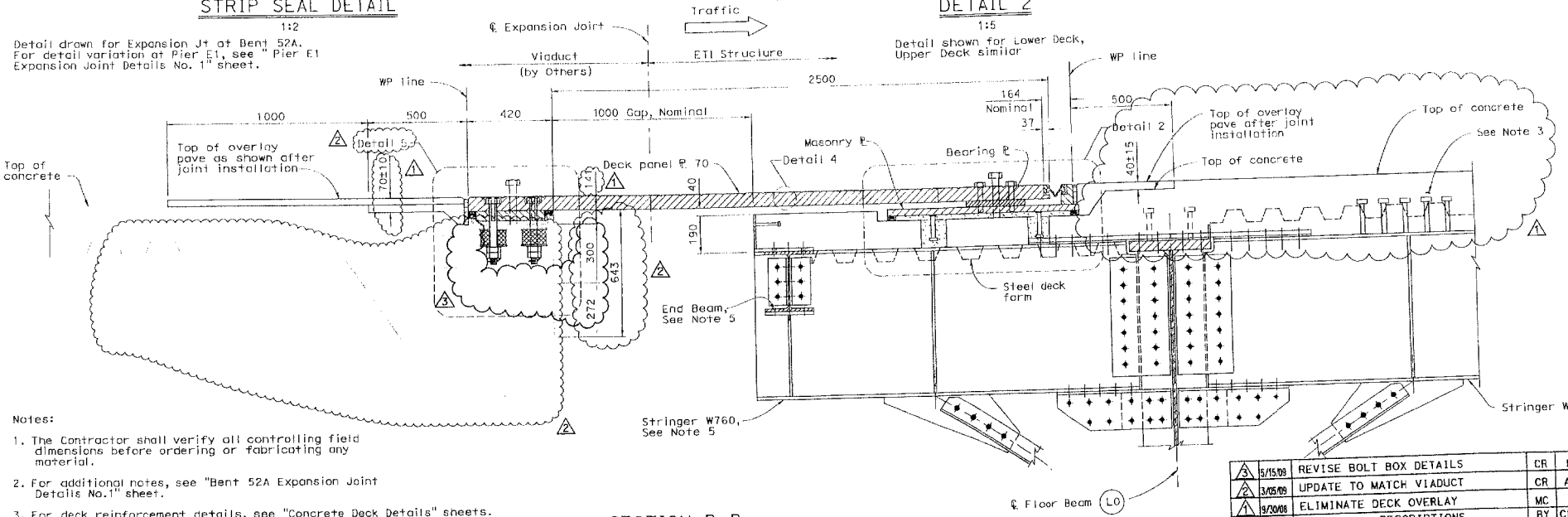

SECTION B-B

1:10

Expansion Joint in Lower Deck

Notes:

1. The Contractor shall verify all controlling field dimensions before ordering or fabricating any material.
2. For additional notes, see "Bent 52A Expansion Joint Details No.1" sheet.
3. For deck reinforcement details, see "Concrete Deck Details" sheets.
4. For Detail 5 see "Bent 52A Expansion Joint Details No. 1" sheet.
5. For End Beam and stringer details, see "Stringer Details" sheets.
6. For Detail 4, see "Bent 52A Expansion Joint Detail No.1" sheet.
7. Strip seal shall have a movement rating of 100mm.

MARK	DATE	DESCRIPTIONS	BY	CH'D	CCO#
		REVISIONS			
3	5/15/09	REVISE BOLT BOX DETAILS	CR	MC	
2	3/05/09	UPDATE TO MATCH VIADUCT	CR	AML	
1	9/30/08	ELIMINATE DECK OVERLAY	MC	SA	

CONTRACT CHANGE ORDER NO. 144-S2

SHEET 5 OF 15

ALL DIMENSIONS ARE IN MILLIMETERS UNLESS OTHERWISE SHOWN

SAN FRANCISCO OAKLAND BAY BRIDGE
EAST SPAN SEISMIC SAFETY PROJECT

EAST TIE-IN

BENT 52A EXPANSION JOINT DETAILS NO. 3

DESIGN	BY C. Redfield, R. Nutt	CHECKED S. Cheng
DETAILS	BY S. Lee, P. Zhao	CHECKED A. Lee
QUANTITIES	BY H. Nelson	CHECKED A. Lee

PREPARED FOR THE STATE OF CALIFORNIA
DEPARTMENT OF TRANSPORTATION

M. Son, PROJECT ENGINEER
S. Abbas, PROJECT MANAGER
CU
EA 0120R4

BRIDGE NO. 34-0006 (TEMP)
KILOMETER POST 12.6

T. Ostrom/M. Whiteside/A. Akinsanya
DESIGN OVERSIGHT
SIGN OFF DATE

DISREGARD PRINTS BEARING EARLIER REVISION DATES

REVISION DATES (PRELIMINARY STAGE ONLY): 11/2007 | 4/2008 | 5/2008 | 1/2009 | 3/2009 | 5/2009

SHEET 93R3 OF 214

DESIGN DETAIL SHEET (METRIC) REV. 3/6/98
@DATE@ @TIME@ Pen Table File

ORIGINAL SCALE IN MILLIMETERS FOR REDUCED PLANS 0 10 20 30 40 50 60 70 80 90 100

FILE => p:\bb\04-012001\et1\Revision-5_06_09\akbejd03-a.dgn

USERNAME => AlBe

DATE PLOTTED => 5/15/2009

TIME PLOTTED => 2156:50 PM

FILE => p:\bb\04-012001\et1\Revision-5_06_09\akbejd03-a.dgn

100% PS&E

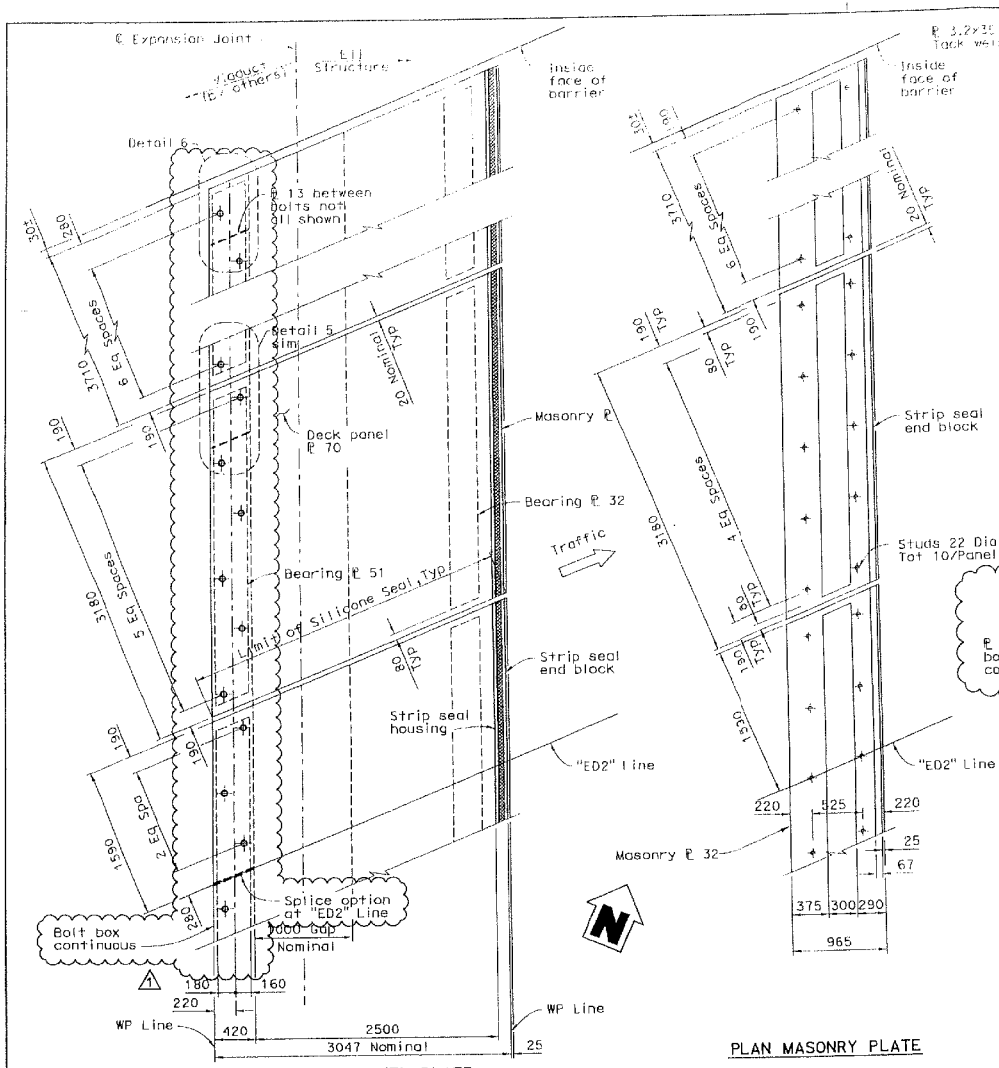

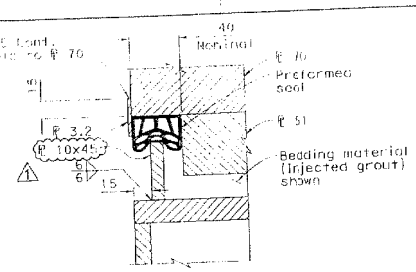

DETAIL 8
1:2

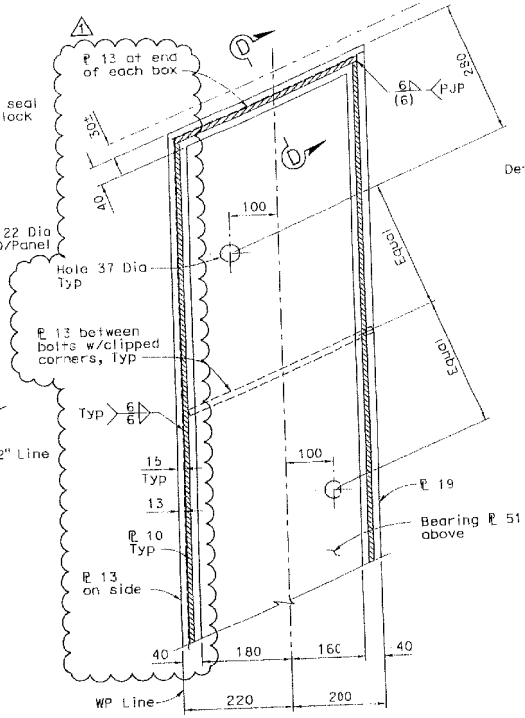

DETAIL 6
1:5

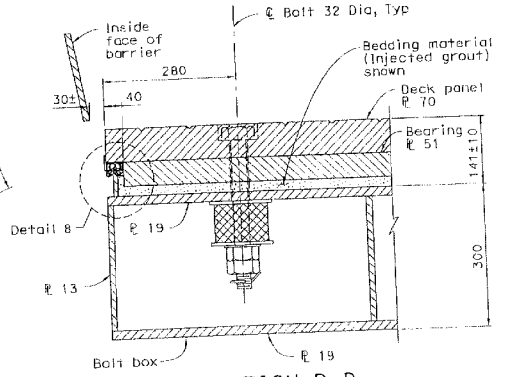

SECTION D-D
1:5

MARK	DATE	DESCRIPTIONS	BY	CH'D	CCO#
1	5/15/09	REVISE BOLT BOX DETAILS	CR	MC	

REVISIONS

CONTRACT CHANGE ORDER NO. 144-S2
SHEET 6 OF 16

Notes:

1. The Contractor shall verify all controlling field dimensions before ordering or fabricating any material.
2. Dimensions are given parallel to or perpendicular to "ED2" Line.
3. The stringers are not shown for clarity.
4. For detail of Fuse Panel, see "Bent 52A Expansion Joint Details No. 5" sheet.
5. For Detail 5, see "Bent 52A Expansion Joint Details No. 2" sheet.
6. Direction of thermal movement.

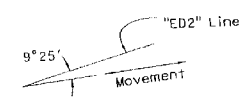

TYPICAL PANELS - LOWER DECK
1:25

Panels to the left of "ED2" line shown
Panels to the right of "ED2" line similar (See Note 4)
Gap not drawn to scale

Detail drawn for Expansion Joint Lower Deck
Detail for Expansion Joint Upper Deck similar
Plan view of Bolt box below Deck panel
ALL DIMENSIONS ARE IN MILLIMETERS UNLESS OTHERWISE SHOWN

Caltrans Metric

DIST	CONT	ROUTE	KILOMETER POST TOTAL PROJECT	SHEET NO.	TOTAL
04	[illegible]	80	12.6/[illegible]		

REGISTERED CIVIL ENGINEER
5-12-08
PLANS APPROVAL DATE

The State of California or its officers or agents shall not be responsible for the accuracy or completeness of electronic copies of this plan sheet.

T.Y. LIN / MOFFATT & NICHOL
Two Harrison Street, Suite 500
San Francisco, CA 94105

100% PS&E

SAN FRANCISCO OAKLAND BAY BRIDGE
EAST SPAN SEISMIC SAFETY PROJECT

EAST TIE-IN

BENT 52A EXPANSION JOINT DETAILS NO. 4

T. Ostrom/M. Whiteside/A. Akinsanya
DESIGN OVERSIGHT
SIGN OFF DATE

	BY	CHECKED
DESIGN	C. Redfield, R. Nutt	S. Cheng
DETAILS	S. Lee, P. Zhao	A. Lee
QUANTITIES	H. Nelson	A. Lee

PREPARED FOR THE STATE OF CALIFORNIA DEPARTMENT OF TRANSPORTATION

M. Sah
PROJECT ENGINEER
S. Abbas
PROJECT MANAGER
CU
EA 0120R4

BRIDGE NO. 34-0006 (TEMP)
KILOMETER POST 12.6

DISREGARD PRINTS BEARING EARLIER REVISION DATES

REVISION DATES (PRELIMINARY STAGE ONLY)

SHEET 94R1 OF 214

DESIGN DETAIL SHEET (METRIC) (REV. 3/1/98)
DATE *TIME* Pen Table File

ORIGINAL SCALE IN MILLIMETERS FOR REDUCED PLANS 0 10 20 30 40 50 60 70 80 90 100

FILE => p:\bb\04-012001\eti\Revision-5_06_09\akbejd04.dgn

USERNAME => ALee DATE PLOTTED => 5/15/2009 TIME PLOTTED => 2:56:52 PM

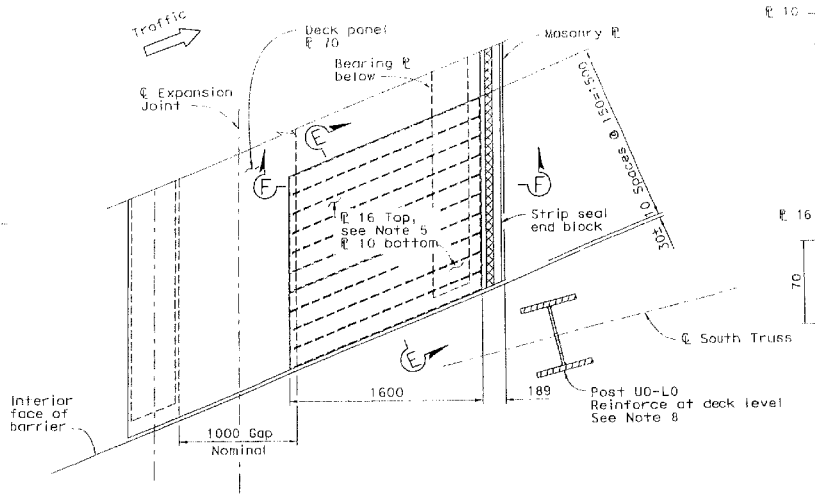

DETAIL OF FUSE PANEL
1:20

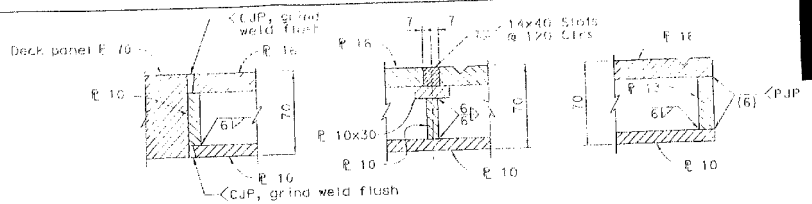

DETAIL 9
1:2

DETAIL 10
1:2

DETAIL 11
1:2

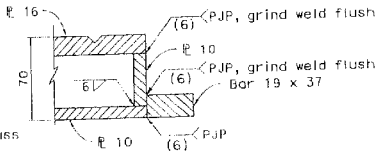

DETAIL 12
1:2

MARK	DATE	REVISIONS	BY	CH'D	CCO#
1	9/30/08	ELIMINATE DECK OVERLAY	MC	SA	

CONTRACT CHANGE ORDER NO. 144-S2
SHEET 7 OF 15

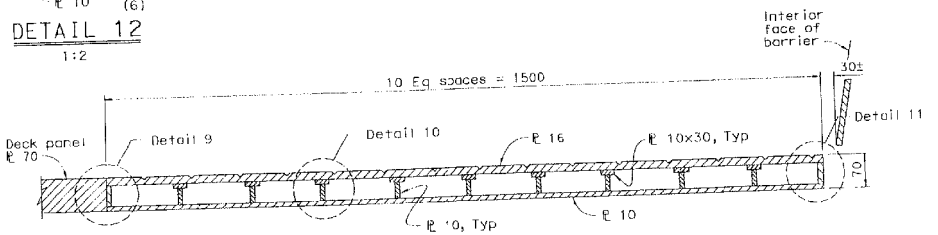

SECTION E-E
1:5

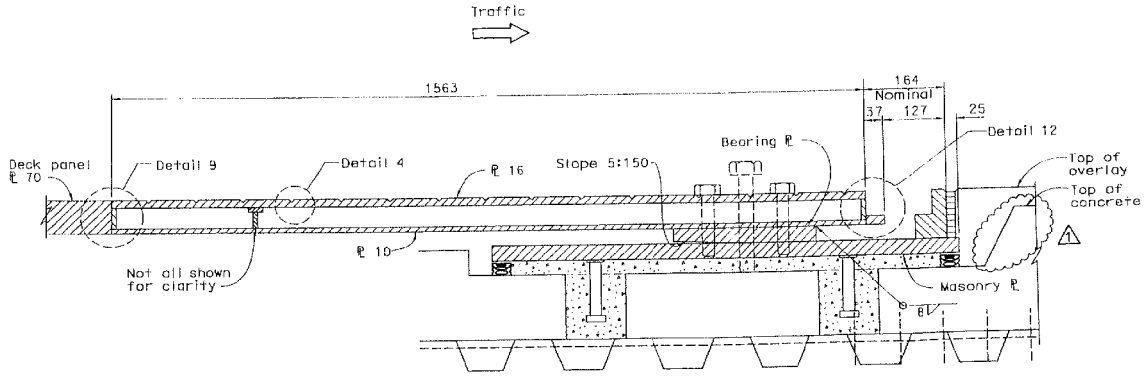

SECTION F-F
1:5
See Note 4

Notes:

1. Contractor shall verify all controlling field dimensions before ordering or fabricating any material.
2. Direction of thermal movement

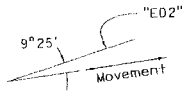

3. The stringers are not shown here for clarity.
4. For balance of details, see "Bent 52A Expansion Joint Details No. 3" sheet.
5. Plate with V-Grooves at 45°.
6. For Detail 4, see "Bent 52A Expansion Joint Detail No. 1" sheet.
7. Strip seal element not shown here for clarity.
8. For reinforcement of post, see "Miscellaneous Details" sheets.

ALL DIMENSIONS ARE IN MILLIMETERS UNLESS OTHERWISE SHOWN

Caltrans Metric

REGISTERED CIVIL ENGINEER — Date
PLANS APPROVAL DATE
The State of California or its officers or agents shall not be responsible for the accuracy or completeness of electronic copies of this plan sheet.

Y. LIN / MOFFATT & NICHOL
Two Harrison Street, Suite 500
San Francisco, CA 94105

T. Ostrom/M. Whiteside/A. Akinsanya
DESIGN OVERSIGHT

SIGN OFF DATE

	BY	CHECKED
DESIGN	C. Redfield, R. Nutt	S. Cheng
DETAILS	S. Lee, P. Zhao	A. Lee
QUANTITIES	N. Nelson	A. Lee

PREPARED FOR THE STATE OF CALIFORNIA
DEPARTMENT OF TRANSPORTATION

M. Soh
PROJECT ENGINEER
S. Abbas
PROJECT MANAGER

CU
EA 0120R4

BRIDGE NO. 34-0006 (TEMP)
KILOMETER POST 12.6

DISREGARD PRINTS BEARING EARLIER REVISION DATES →

REVISION DATES (PRELIMINARY STAGE ONLY): 11/20/07 | 4/09/08 | 5/30/08 | 9/30/08

SAN FRANCISCO OAKLAND BAY BRIDGE
EAST SPAN SEISMIC SAFETY PROJECT

EAST TIE-IN

BENT 52A EXPANSION JOINT DETAILS NO. 5

SHEET 95R1 OF 214

ORIGINAL SCALE IN MILLIMETERS FOR REDUCED PLANS 0 10 20 30 40 50 60 70 80 90 100

DESIGN DETAIL SHEET (METRIC) (REV. 3/1/06)
•DATE• •TIME• Pen Table File

FILE => p:\bb\04-0120r1\ett\revision to\dbej005.dgn

USERNAME => DEMOD
DATE PLOTTED => 10/7/2008
TIME PLOTTED => 11:17:27 AM
FILE => p:\bb\04-0120r1\ett\revision to\dbej005.dgn
100% PS&E

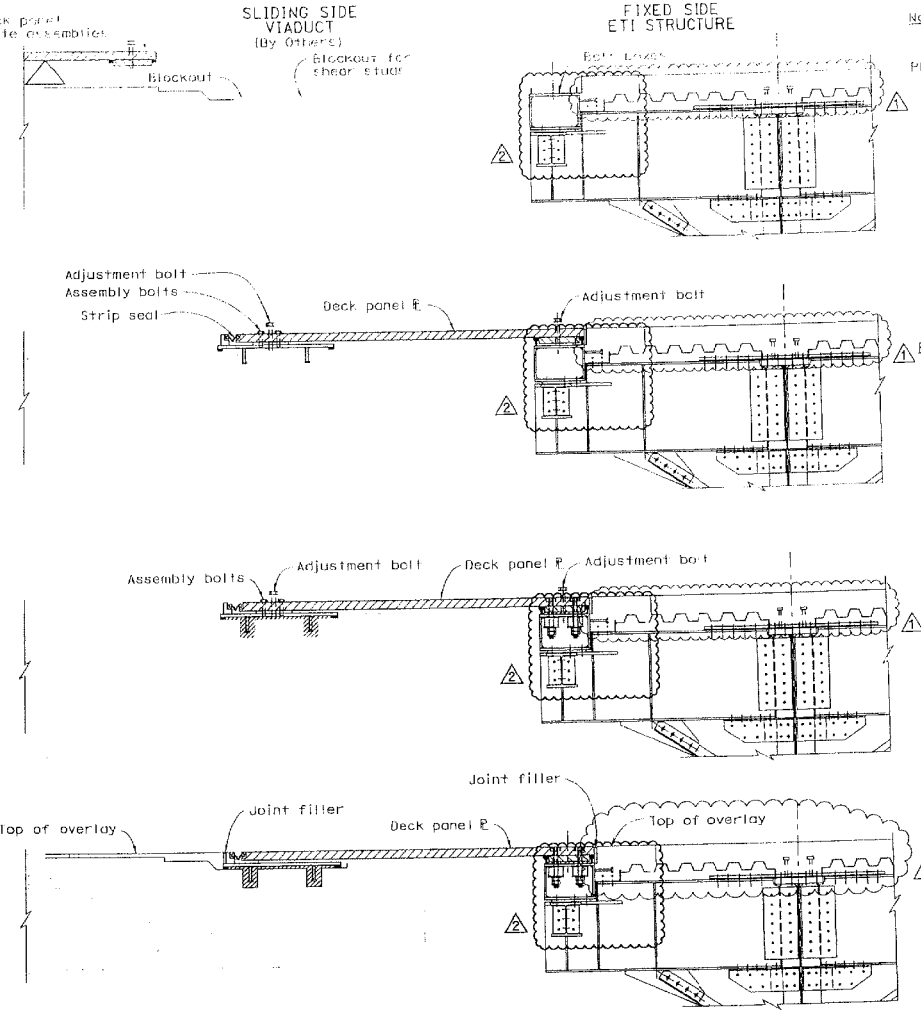

Note: Sequence shown for use of injected grout as bedding material.

Phase 1: - Joint situation of completion of Roll in operation.

1. Deck on sliding side prepared with blockouts to receive the masonry plate and the vertical shear studs.
2. Bolt boxes cast in on the fixed side.
3. Deck panel plate assemblies prefabricated including prepositioned bearing and masonry plates and strip seals.
   a. Strip seal end block welded to masonry plate. Set gap for anticipated installation temperatures.
   b. Strip seals installed in each individual plate assembly.
4. Place deck panel assemblies for the Bent 52A expansion joints on the Viaduct prior to Roll-Out Roll-In operation. The assemblies consist of prefabricated and pre-positioned bearing and masonry plates, and completed strip seals.

Phase 2: - Place all five deck panel plate assemblies in position across the joint opening.

- Adjust deck panel plates to achieve best fit with plan and profile.
- Fix panel height with use of the adjustment bolts.
- Ensure that the perimeter around the areas to be grouted are properly sealed.

Phase 3: - Inject fast setting grout under low pressure on both sliding side and fixed side.

- Install bolting on the fixed side as follows:
  1. Withdraw the plastic dowels from the holes once the grout has set enough to not flow.
  2. Field drill through the opened hole into the top plate of the bolt box below.
  3. Insert and tighten the bolts using the neoprene washer assemblies and lock nuts.
  4. Complete all bolts on the fixed side.

Phase 4: - After the grout has achieved initial set, extract the assembly bolts and fill the holes with sealant.

- Remove the adjustment bolts and fill the holes with sealant.
- Place joint filler strip elements on each side of the expansion joint assemblies.
- (1) Place overlay on each side of the expansion joints feathering to the finished pavement.
- Place silicone seal between deck panel plates.
- Clean up.

Notes:

1. Construction sequence shown for the Bent 52A expansion joint in the upper deck with traffic towards San Francisco. Construction sequence for the Bent 52A expansion joint in the lower deck with traffic in direction of Oakland similar.
2. Deck panel plate assemblies weight, including bearing and masonry plates and strip seals is approximately between 7.0 tons and 8.5 tons.
3. To expedite the construction sequence and to maximize efficiency, the Contractor shall provide separate work teams, fully equipped with personnel and equipment, dedicated for each expansion joint location.
4. The Contractor to provide temporary bridges to allow equipment to cross joints during bedding material curing time without loading the expansion joint plates.

MARK	DATE	DESCRIPTIONS	BY	CH'D	CCO#
2	5/15/09	REVISE BOLT BOX DETAILS	CR	MC	
1	9/30/08	ELIMINATE DECK OVERLAY	MC	SA	

REVISIONS

CONTRACT CHANGE ORDER NO. ~~144~~ 32
SHEET 8 OF 16

CONSTRUCTION SEQUENCE

Expansion Joint at Bent 52A

ALL DIMENSIONS ARE IN MILLIMETERS UNLESS OTHERWISE SHOWN

Caltrans Metric

REGISTERED CIVIL ENGINEER
5-12-09
PLANS APPROVAL DATE

The State of California or its officers or agents shall not be responsible for the accuracy or completeness of electronic copies of this plan sheet.

T.Y. LIN / MOFFATT & NICHOL
Two Harrison Street, Suite 500
San Francisco, CA 94105

SAN FRANCISCO OAKLAND BAY BRIDGE
EAST SPAN SEISMIC SAFETY PROJECT

EAST TIE-IN

BENT 52A EXPANSION JOINT DETAILS NO. 6

T. Ostrom/M. Whiteside/A. Akinsanya
DESIGN OVERSIGHT
SIGN OFF DATE

DESIGN	BY C. Redfield, R. Nutt	CHECKED S. Cheng	
DETAILS	BY S. Lee, P. Zhao	CHECKED A. Lee	
QUANTITIES	BY H. Nelson	CHECKED A. Lee	

PREPARED FOR THE STATE OF CALIFORNIA DEPARTMENT OF TRANSPORTATION

M. Soh
PROJECT ENGINEER
S. Abbas
PROJECT MANAGER

BRIDGE NO. 34-0006 (TEMP)
KILOMETER POST 12.6

CU
EA 0120R4

DISREGARD PRINTS BEARING EARLIER REVISION DATES

REVISION DATES (PRELIMINARY STAGE ONLY)

SHEET 96R2 OF 214

DESIGN DETAIL SHEET (METRIC) (REV. 3/1/98)
#DATE# #TIME# Pen Table File

ORIGINAL SCALE IN MILLIMETERS FOR REDUCED PLANS 0 10 20 30 40 50 60 70 80 90 100

FILE => p:\bb\04-012001\eti\Revision-5_06_09\akbejd06.dgn

100% PS&E

FILE => p:\bb\04-012001\eti\Revision-5_06_09\akbejd06.dgn
TIME PLOTTED => 2:56:54 PM
DATE PLOTTED => 5/15/2009
USERNAME => ALee

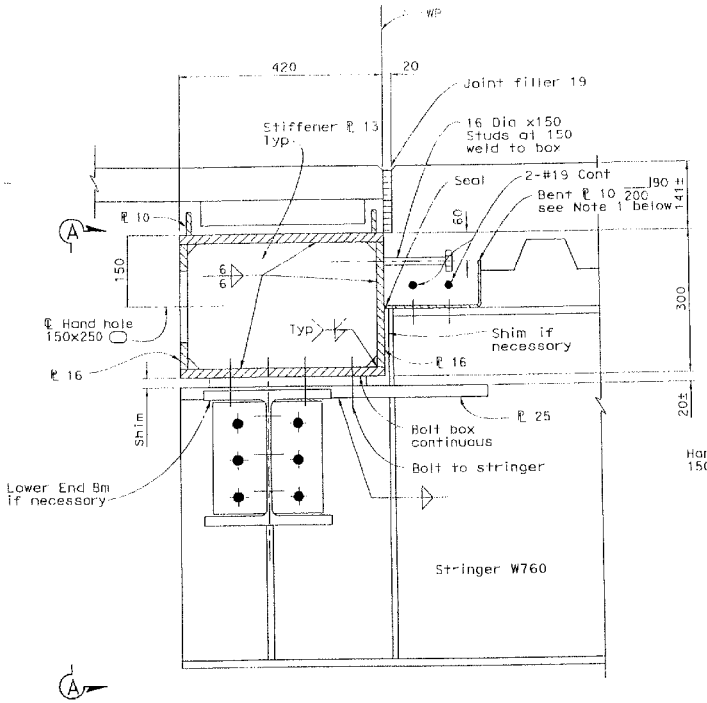

REVISED BOLT BOX DETAILS

1:5

Note 1. Bent plate to span between stringers, splice at stringers. Bolt to stringers, 4 - 19 mm bolts tot/stringer.

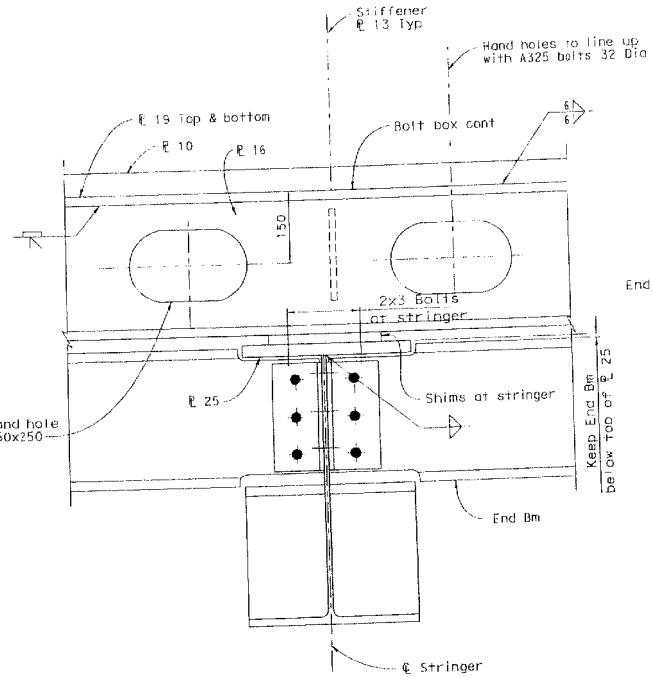

SECTION A-A

1:5

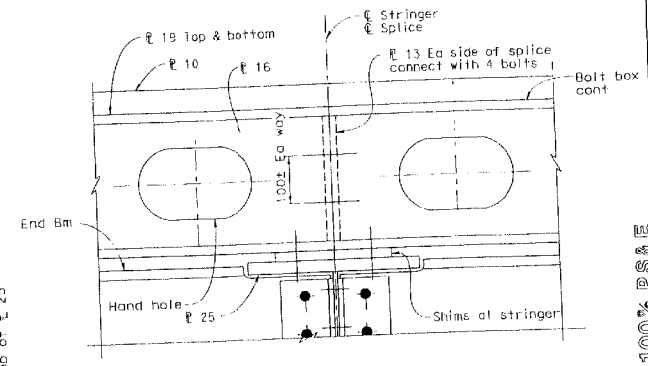

SPLICE OPTION AT STRINGER

1:5

CONTRACT NO. 04-0120R4

CONTRACT CHANGE ORDER NO 144-S2

SHEET 9 OF 16

Caltrans Metric

DESIGN	BY C. Redfield, R. Nutt	CHECKED S. Cheng	PREPARED FOR THE STATE OF CALIFORNIA DEPARTMENT OF TRANSPORTATION	M. Soh PROJECT ENGINEER S. Abbas PROJECT MANAGER	BRIDGE NO. 34-0006 (TEMP) KILOMETER POST 12.6
DETAILS	BY S. Lee, P. Zhao	CHECKED A. Lee			
QUANTITIES	BY H. Nelson	CHECKED A. Lee		CU EA 0120R4	

T. Ostrom/M. Whiteside/A. Akinsanya
DESIGN OVERSIGHT

SIGN OFF DATE

DESIGN DETAIL SHEET (METRIC) REV. 3/1/96
DATE *TIME* Pen Table File

ORIGINAL SCALE IN MILLIMETERS FOR REDUCED PLANS 0 10 20 30 40 50 60 70 80 90 100

ALL DIMENSIONS ARE IN MILLIMETERS UNLESS OTHERWISE SHOWN

SAN FRANCISCO OAKLAND BAY BRIDGE
EAST SPAN SEISMIC SAFETY PROJECT

EAST TIE-IN

BOLT BOX DETAILS @ BENT 52A EXPANSION JOINT

DISREGARD PRINTS BEARING EARLIER REVISION DATES 5/15/09

REVISION DATES (PRELIMINARY STAGE ONLY)

SHEET 96A OF 214

FILE => p:\bb\04-012001\etl\Revision-5_06_09\akbejd01-b1.dgn

100% PS&E

USERNAME => ALee DATE PLOTTED => 5/15/2009 TIME PLOTTED => 2:56:45 PM

MARK	DATE	DESCRIPTIONS	BY	CH'D	CCO#
1	7/01/09	CORRECTION PER MEETING WITH FABRICATOR	HN	CR	

REVISIONS

CONTRACT CHANGE ORDER NO. 144-S2
SHEET 10 OF 16

LEGEND:

Indicates steel deck plate V-grooves at ±45°

Indicates existing structure

Notes:

1. The Contractor shall verify all controlling field dimensions before ordering or fabricating any material.
2. For Sections A-A and B-B, see "Pier E1 Expansion Joint Details No. 1" and "Pier E1 Expansion Joint Details No. 3" sheets, respectively.
3. For barrier expansion joint and cover ℄ details, see "Pier E1 Expansion Joint Barrier" sheets.

Caltrans Metric

DIST	COUNTY	ROUTE	KILOMETER POST TOTAL PROJECT	SHEET No	TOTAL
04	SF	80	12.6/13.2		

REGISTERED CIVIL ENGINEER

10-01-08
PLANS APPROVAL DATE

REGISTERED PROFESSIONAL ENGINEER Charles Redfield No. C 27605 Exp. 12/31/09 CIVIL STATE OF CALIFORNIA

The State of California or its officers or agents shall not be responsible for the accuracy or completeness of electronic copies of this plan sheet.

T.Y. LIN / MOFFATT & NICHOL
Two Harrison Street, Suite 500
San Francisco, CA 94105

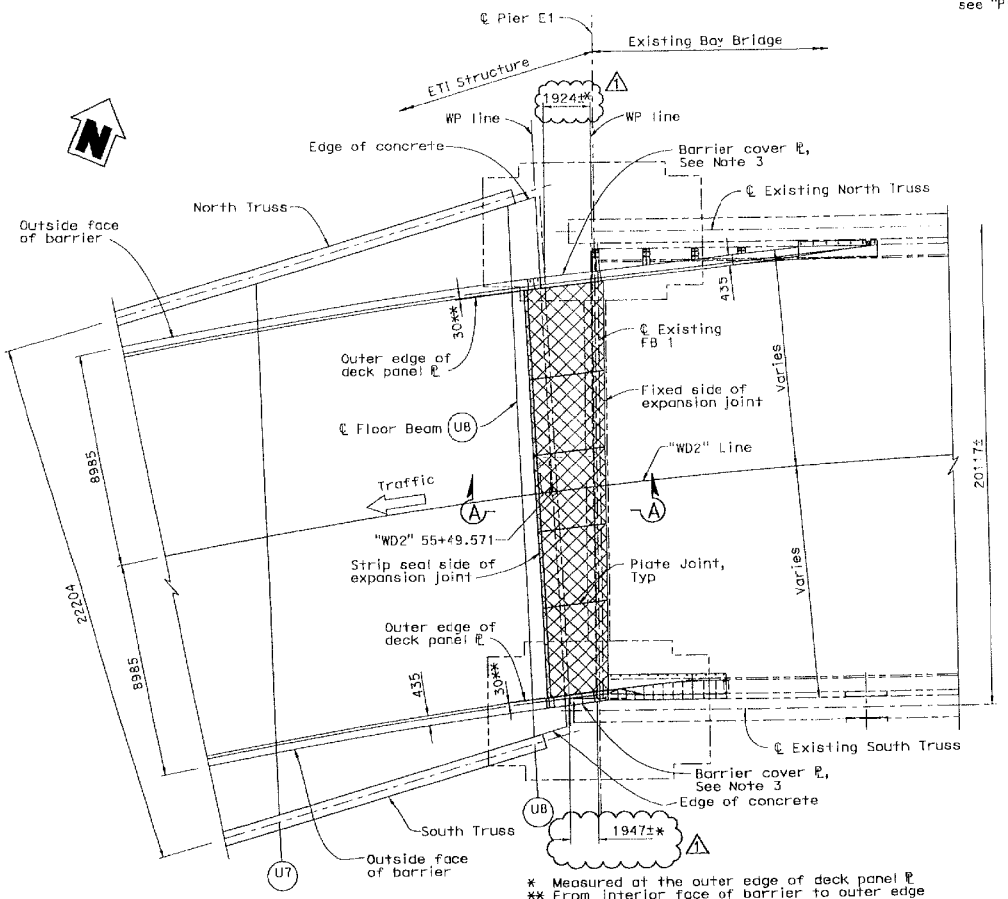

* Measured at the outer edge of deck panel ℄
** From interior face of barrier to outer edge of deck panel ℄

PLAN EXPANSION JOINT UPPER DECK
1:100

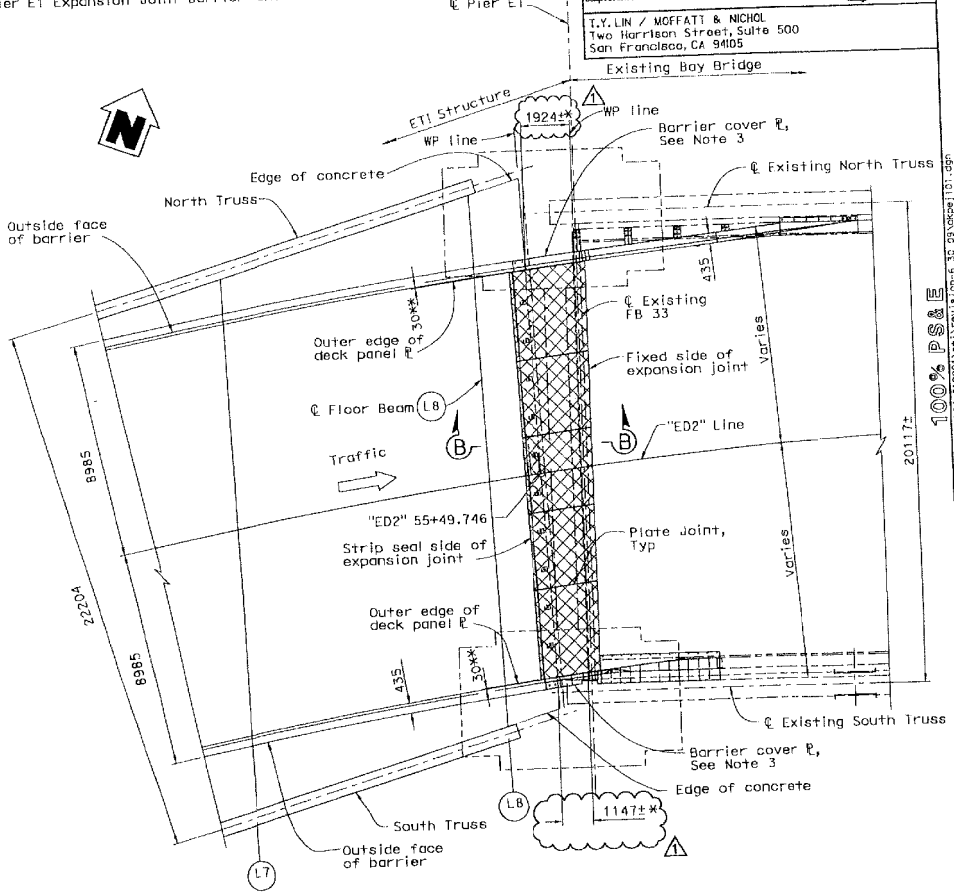

PLAN EXPANSION JOINT LOWER DECK
1:100

100% PS&E

ALL DIMENSIONS ARE IN MILLIMETERS UNLESS OTHERWISE SHOWN

SAN FRANCISCO OAKLAND BAY BRIDGE
EAST SPAN SEISMIC SAFETY PROJECT

EAST TIE-IN

PIER E1 EXPANSION JOINT LAYOUT

T. Ostrom/M. Whiteside/A. Akinsanya
DESIGN OVERSIGHT

SIGN OFF DATE

DESIGN DETAIL SHEET (METRIC) (REV. 3/1/98)
●DATE● ●TIME● Pen Table File

	BY	CHECKED
DESIGN	C. Redfield, R. Nutt	S. Cheng
DETAILS	S. Lee, P. Zhao	A. Lee
QUANTITIES	H. Nelson	A. Lee

ORIGINAL SCALE IN MILLIMETERS FOR REDUCED PLANS 0 10 20 30 40 50 60 70 80 90 100

PREPARED FOR THE STATE OF CALIFORNIA DEPARTMENT OF TRANSPORTATION

M. Soh
PROJECT ENGINEER
S. Abbas
PROJECT MANAGER

CU
EA 012QR4

BRIDGE NO. 34-0006 (TEMP)
KILOMETER POST 12.6

DISREGARD PRINTS BEARING EARLIER REVISION DATES

REVISION DATES (PRELIMINARY STAGE ONLY)

SHEET 99R1 OF 214

FILE => p:\bb\04-012001\eti\revision-6_30_09\akpej101.dgn

USERNAME => ALee DATE PLOTTED => 7/1/2009 TIME PLOTTED => 3:08:32 PM FILE => p:\bb\04-012001\eti\revision-6_30_09\akpej101.dgn

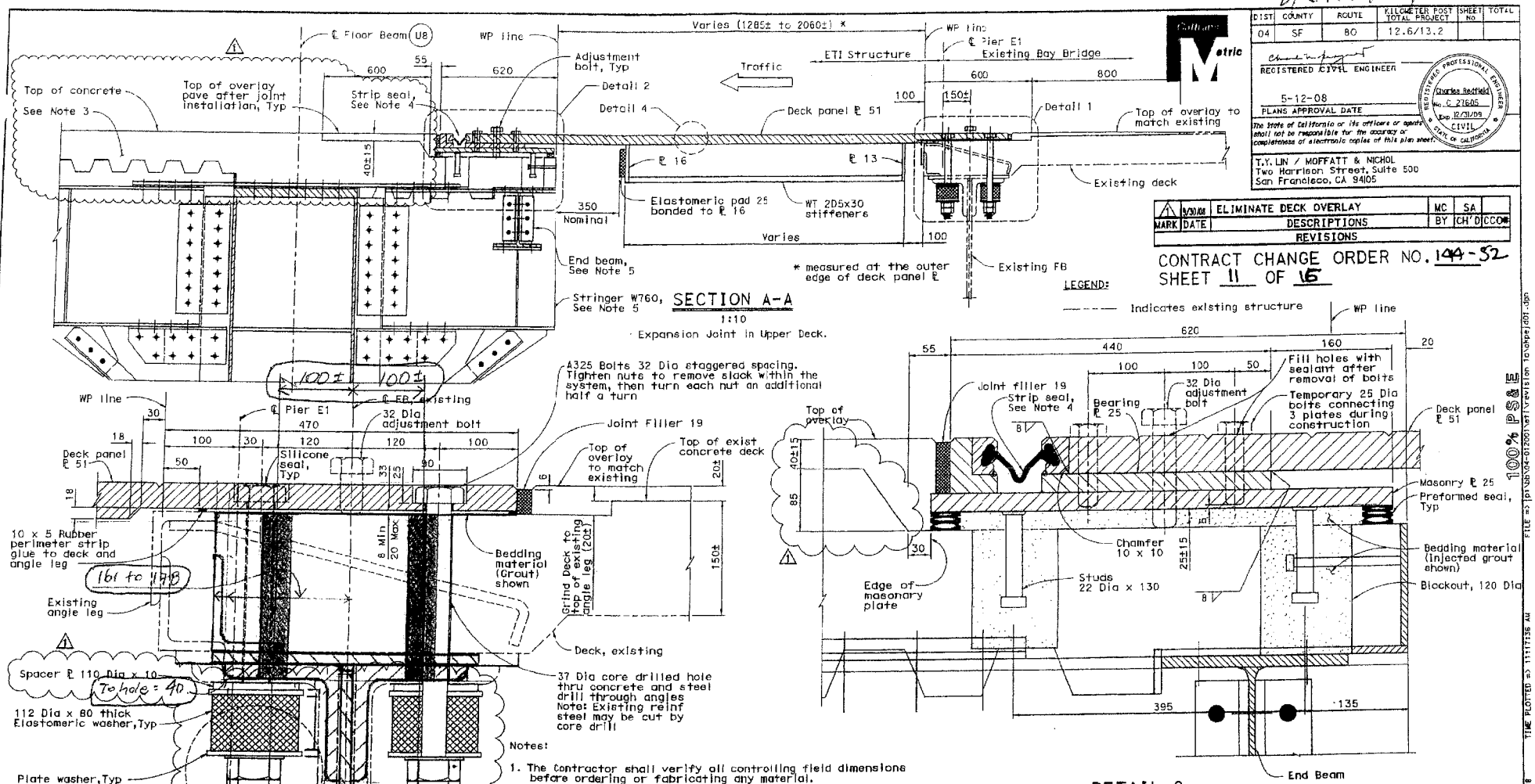

14 May 2009

DIST	COUNTY	ROUTE	KILOMETER POST TOTAL PROJECT	SHEET NO	TOTAL
04	SF	80	12.6/13.2		

REGISTERED CIVIL ENGINEER

5-12-08
PLANS APPROVAL DATE

The State of California or its officers or agents shall not be responsible for the accuracy or completeness of electronic copies of this plan sheet.

Registered Professional Engineer — Charles Redfield — No. C 27605 — Exp. 12/31/09 — CIVIL — State of California

T.Y. LIN / MOFFATT & NICHOL
Two Harrison Street, Suite 500
San Francisco, CA 94105

MARK	DATE	REVISIONS	BY	CH'D	DISC#
1	5/30/08	ELIMINATE DECK OVERLAY	MC	SA	

CONTRACT CHANGE ORDER NO. 144-52
SHEET 11 OF 16

100% PS&E

FILE => p:\04\04-0120r4\ett\revision to\pier e1 dot.dgn
TIME PLOTTED => 11:17:36 AM
DATE PLOTTED => 10/7/2008
USERNAME => pdodd

T. Ostrom/M. Whiteside/A. Akinsanya	DESIGN	BY C. Redfield, R. Nutt	CHECKED S. Cheng	PREPARED FOR THE STATE OF CALIFORNIA DEPARTMENT OF TRANSPORTATION	M. Sah
DESIGN OVERSIGHT	DETAILS	BY S. Lee, P. Zhao	CHECKED A. Lee		PROJECT ENGINEER
SIGN OFF DATE	QUANTITIES	BY H. Nelson	CHECKED A. Lee		S. Abbas
					PROJECT MANAGER
DESIGN DETAIL SHEET METRIC REV. 3/1/99 @DATE@ @TIME@ Pen Table File	ORIGINAL SCALE IN MILLIMETERS FOR REDUCED PLANS 0 10 20 30 40 50 60 70 80 90 100				CU 0120R4

ALL DIMENSIONS ARE IN MILLIMETERS UNLESS OTHERWISE SHOWN

DISREGARD PRINTS BEARING EARLIER REVISION DATES

BRIDGE NO.	KILOMETER POST
34-0006 (TEMP)	12.6

SAN FRANCISCO OAKLAND BAY BRIDGE
EAST SPAN SEISMIC SAFETY PROJECT

EAST TIE-IN

PIER E1 EXPANSION JOINT DETAILS NO. 1

REVISION DATES (PRELIMINARY STAGE ONLY)								SHEET	OF
11/07	12/08	3/09	4/09					100R	214

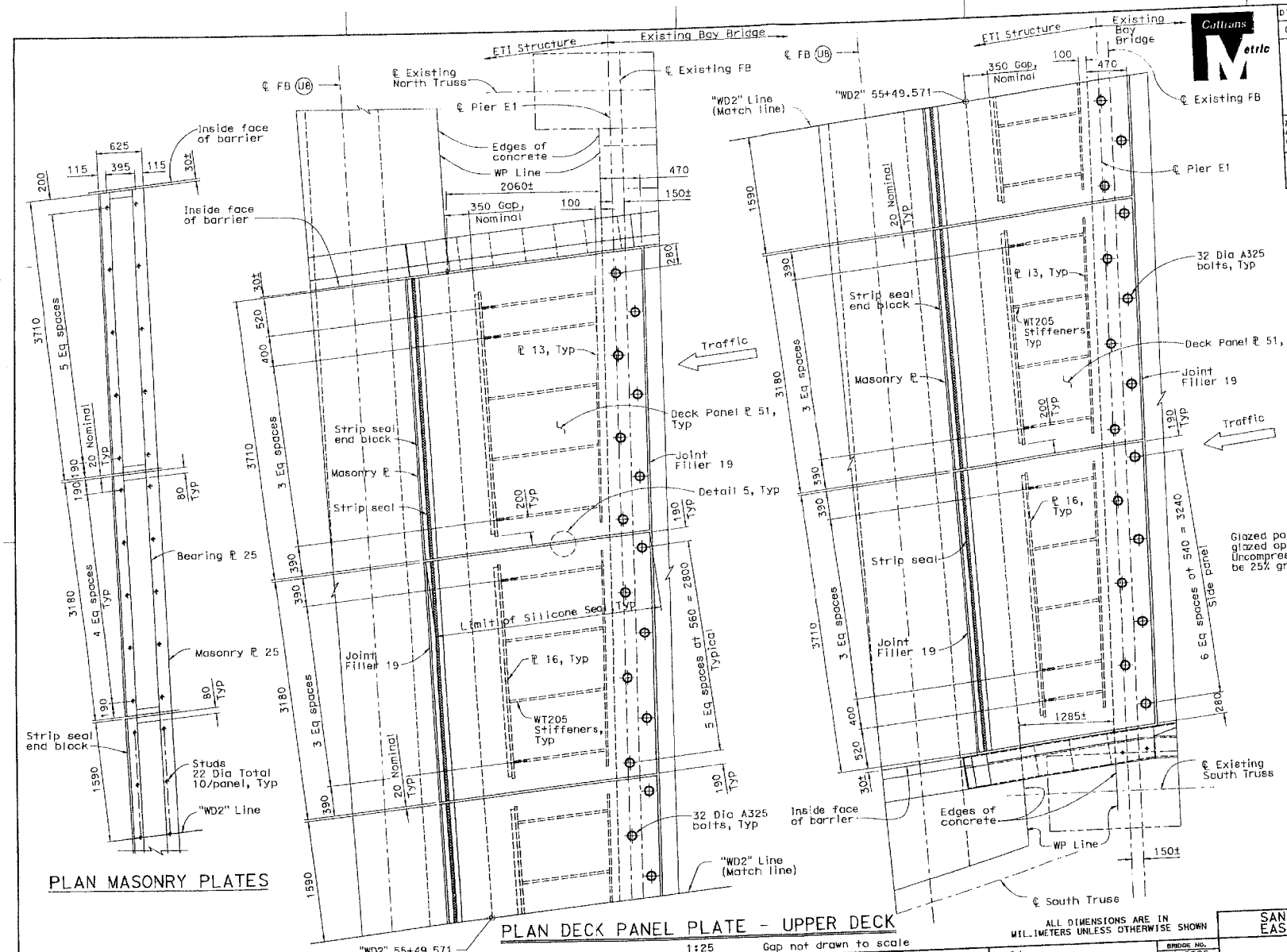

PLAN MASONRY PLATES

PLAN DECK PANEL PLATE - UPPER DECK

1:25 Gap not drawn to scale

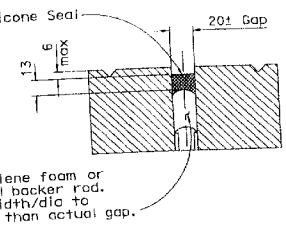

DETAIL 5

NTS

LEGEND:

- - - - Indicates existing structure

Notes:

1. The Contractor shall verify all controlling field dimensions before ordering or fabricating any material.
2. Dimensions are given parallel to or perpendicular to "WD2" Line.
3. The stringers are not shown for clarity.
4. Direction of thermal movement.

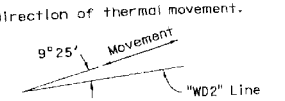

DIST	COUNTY	ROUTE	KILOMETER POST TOTAL PROJECT	SHEET No	TOTAL
04	SF	80	12.6/13.2		

REGISTERED CIVIL ENGINEER

5-12-08

PLANS APPROVAL DATE

The State of California or its officers or agents shall not be responsible for the accuracy or completeness of electronic copies of this plan sheet.

REGISTERED PROFESSIONAL ENGINEER Charles Redfield No. C 27605 Exp. 12/31/09 CIVIL STATE OF CALIFORNIA

T.Y. LIN / MOFFATT & NICHOL
Two Harrison Street, Suite 500
San Francisco, CA 94105

CONTRACT NO. 04-0120R4

CONTRACT CHANGE ORDER NO 144-S2

SHEET 12 OF 16

100% PS&E

ALL DIMENSIONS ARE IN MILLIMETERS UNLESS OTHERWISE SHOWN

SAN FRANCISCO OAKLAND BAY BRIDGE
EAST SPAN SEISMIC SAFETY PROJECT

EAST TIE-IN

PIER E1 EXPANSION JOINT DETAILS NO. 2

DESIGN	BY C. Redfield, R. Nutt	CHECKED S. Cheng	
DETAILS	BY S. Lee, P. Zhao	CHECKED A. Lee	
QUANTITIES	BY H. Nelson	CHECKED A. Lee	

PREPARED FOR THE STATE OF CALIFORNIA DEPARTMENT OF TRANSPORTATION

M. Sah
PROJECT ENGINEER
S. Abbas
PROJECT MANAGER

BRIDGE NO. 34-0006 (TEMP)
KILOMETER POST 12.6

CU
EA 0120R4

DISREGARD PRINTS BEARING EARLIER REVISION DATES

REVISION DATES (PRELIMINARY STAGE ONLY)

SHEET 101 OF 214

T. Ostrom/M. Whiteside/A. Akinsanya
DESIGN OVERSIGHT

SIGN OFF DATE

DESIGN DETAIL SHEET (METRIC) (REV. 3/1/98)
#DATE# #TIME# Pen Table File

ORIGINAL SCALE IN MILLIMETERS FOR REDUCED PLANS 0 10 20 30 40 50 60 70 80 90 100

FILE => p:\bb\04-0120R1\eti\dgn\akpejd02.dgn

USERNAME => ALee DATE PLOTTED => 5/9/2008 TIME PLOTTED => 3:51:39 PM FILE => p:\bb\04-0120R1\eti\dgn\akpejd02.dgn

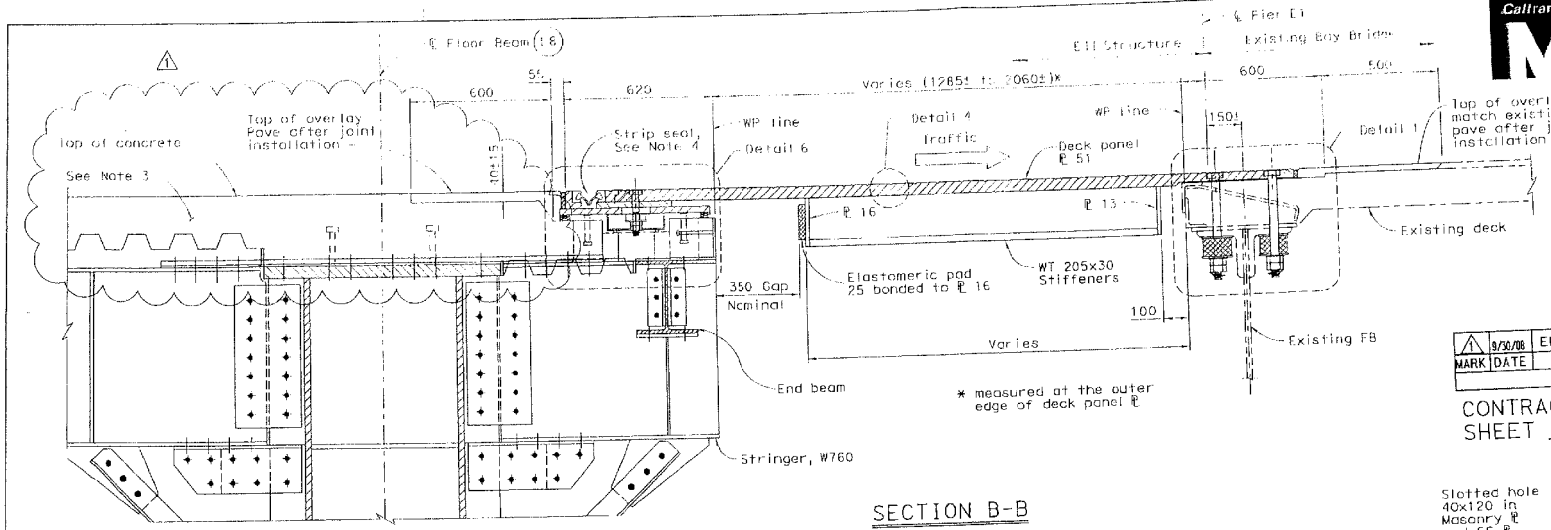

SECTION B-B

1:10

Expansion Joint in Lower Deck.

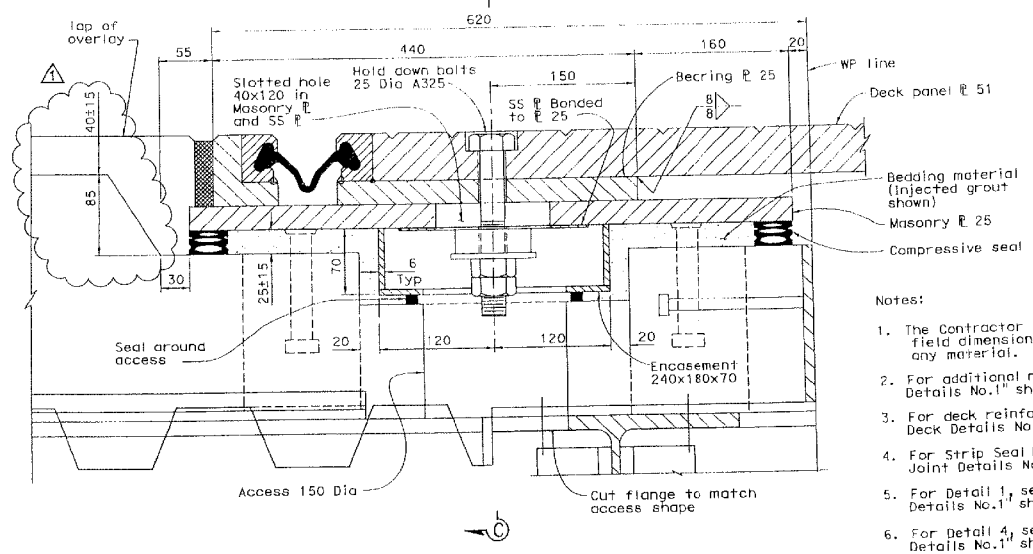

DETAIL 6

1:2.5

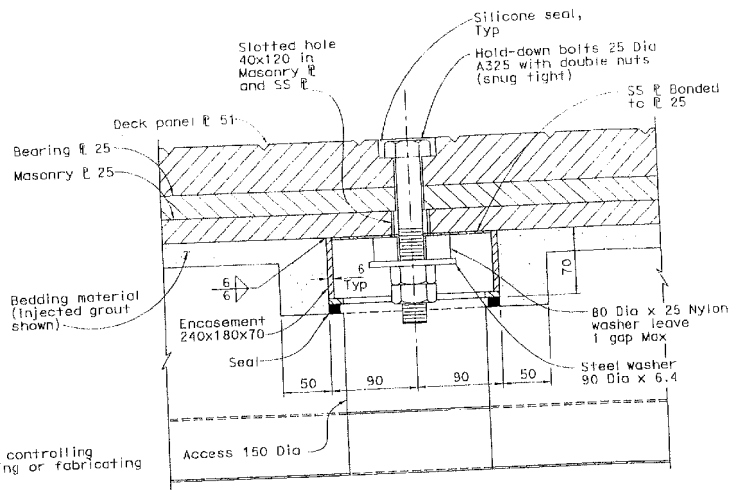

SECTION C-C

1:2.5

Notes:

1. The Contractor shall verify all controlling field dimensions before ordering or fabricating any material.
2. For additional notes, see "Pier E1 Expansion Joint Details No.1" sheet.
3. For deck reinforcement details see "Concrete Deck Details No. 2" sheet.
4. For Strip Seal Detail, see "Bent 52A Expansion Joint Details No. 3" sheet.
5. For Detail 1, see "Pier E1 Expansion Joint Details No.1" sheet.
6. For Detail 4, see "Bent 52A Expansion Joint Details No.1" sheet.

Caltrans Metric

DIST	COUNTY	ROUTE	KILOMETER POST TOTAL PROJECT	SHEET NO.	TOTAL
04	SF	80	12.6 / 12.7		

REGISTERED CIVIL ENGINEER

5-12-08

PLANS APPROVAL DATE

The State of California or its officers or agents shall not be responsible for the accuracy or completeness of electronic copies of this plan sheet.

T.Y. LIN / MOFFATT & NICHOL
Two Harrison Street, Suite 500
San Francisco, CA 94105

LEGEND:

- - - - indicates existing structure

MARK	DATE	DESCRIPTIONS	BY	CH'D	CCO#
1	9/30/08	ELIMINATE DECK OVERLAY	MC	SA	

REVISIONS

CONTRACT CHANGE ORDER NO. 144-S2
SHEET 13 OF 16

100% PS&E

ALL DIMENSIONS ARE IN MILLIMETERS UNLESS OTHERWISE SHOWN

SAN FRANCISCO OAKLAND BAY BRIDGE
EAST SPAN SEISMIC SAFETY PROJECT

EAST TIE-IN

PIER E1 EXPANSION JOINT DETAILS NO. 3

T. Ostrom/M. Whiteside/A. Akinsanya
DESIGN OVERSIGHT

SIGN OFF DATE

DESIGN DETAIL SHEET (METRIC) (REV. 3/1/98)
#DATE# #TIME# Pen Table File

	BY	CHECKED
DESIGN	C. Redfield, R. Nutt	S. Cheng
DETAILS	S. Lee, P. Zhao	A. Lee
QUANTITIES	H. Nelson	A. Lee

PREPARED FOR THE STATE OF CALIFORNIA DEPARTMENT OF TRANSPORTATION

M. Sah
PROJECT ENGINEER
S. Abbas
PROJECT MANAGER

BRIDGE NO. 34-0006 (TEMP)
KILOMETER POST 12.6

CU
EA 0120R4

DISREGARD PRINTS BEARING EARLIER REVISION DATES

REVISION DATES (PRELIMINARY STAGE ONLY)

SHEET 102R1 OF 214

ORIGINAL SCALE IN MILLIMETERS FOR REDUCED PLANS 0 10 20 30 40 50 60 70 80 90 100

FILE => p:\bb\04-012001\eti\revision 1a\ckpejd03.dgn

USERNAME => pzhao DATE PLOTTED => 10/7/2008 TIME PLOTTED => 11:17:40 AM

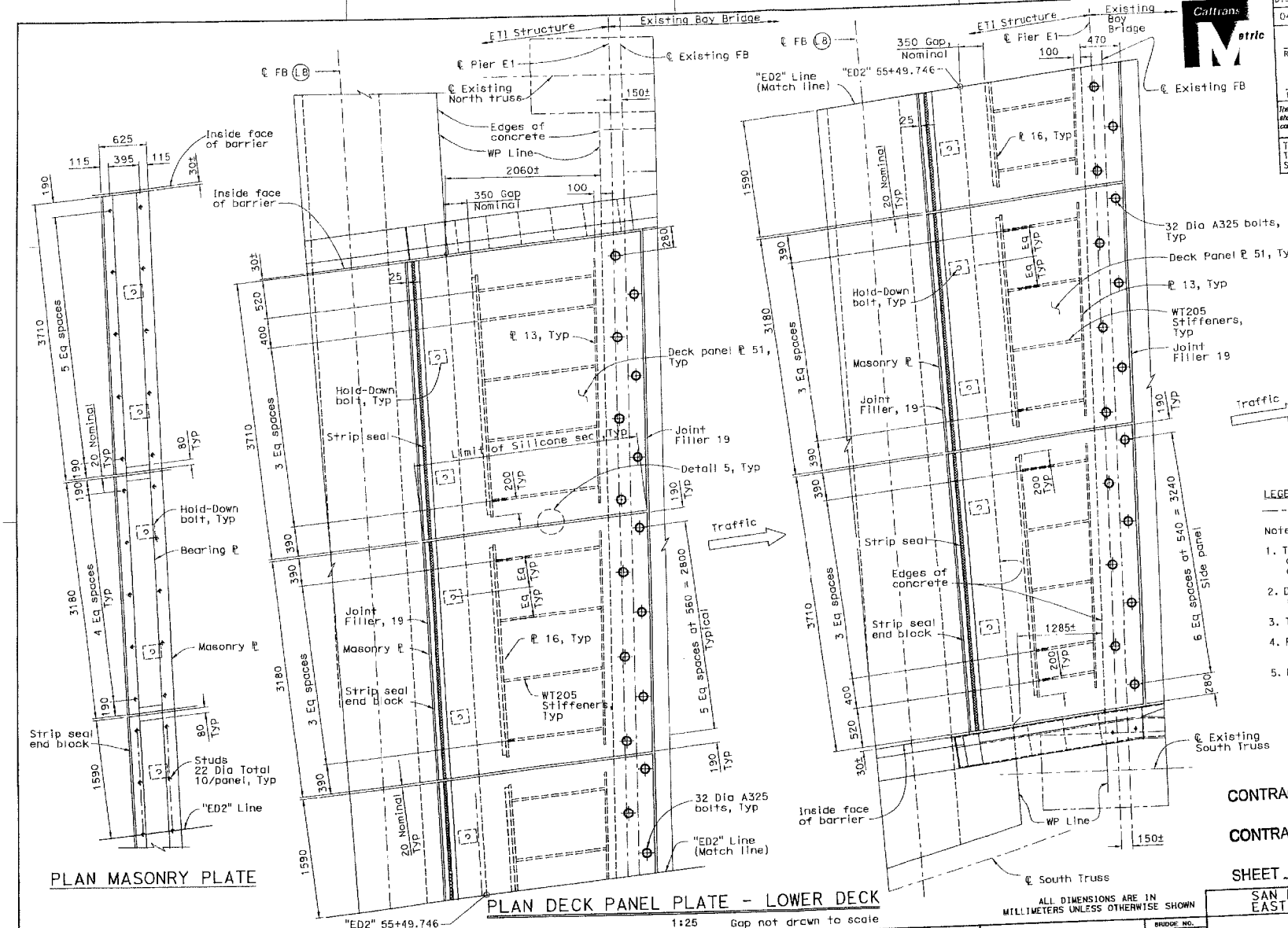

PLAN MASONRY PLATE

PLAN DECK PANEL PLATE - LOWER DECK

1:25 Gap not drawn to scale

ALL DIMENSIONS ARE IN MILLIMETERS UNLESS OTHERWISE SHOWN

DIST	COUNTY	ROUTE	KILOMETER POST TOTAL PROJECT	SHEET No	TOTAL
04	SF	80	12.6/13.2		

Caltrans Metric

REGISTERED CIVIL ENGINEER

5-12-08

PLANS APPROVAL DATE

The State of California or its officers or agents shall not be responsible for the accuracy or completeness of electronic copies of this plan sheet.

REGISTERED PROFESSIONAL ENGINEER Charles Redfield No. C 27605 Exp. 12/31/09 CIVIL STATE OF CALIFORNIA

T.Y. LIN / MOFFATT & NICHOL
Two Harrison Street, Suite 500
San Francisco, CA 94105

100% PS&E

LEGEND:

- - - - - Indicates existing structure

Notes:

1. The Contractor shall verify all controlling field dimensions before ordering or fabricating any material.
2. Dimensions are given parallel to or perpendicular to "ED2" Line.
3. The stringers are not shown for clarity.
4. For Detail 5, see "Pier E1 Expansion Joint Details No. 2" sheet.
5. Direction of thermal movement.

9°25' Movement "ED2" Line

CONTRACT NO. 04-0120R4

CONTRACT CHANGE ORDER NO 144-S2

SHEET 14 OF 16

SAN FRANCISCO OAKLAND BAY BRIDGE
EAST SPAN SEISMIC SAFETY PROJECT

EAST TIE-IN

PIER E1 EXPANSION JOINT DETAILS NO. 4

DESIGN	BY C. Redfield, R. Nutt	CHECKED S. Cheng	
DETAILS	BY S. Lee, P. Zhao	CHECKED A. Lee	
QUANTITIES	BY H. Nelson	CHECKED A. Lee	

PREPARED FOR THE STATE OF CALIFORNIA DEPARTMENT OF TRANSPORTATION

M. Sah
PROJECT ENGINEER
S. Abbas
PROJECT MANAGER

BRIDGE NO. 34-0006 (TEMP)
KILOMETER POST 12.6

CU
EA 0120R4

DISREGARD PRINTS BEARING EARLIER REVISION DATES

REVISION DATES (PRELIMINARY STAGE ONLY)

SHEET 103 OF 214

T. Ostrom/M. Whiteside/A. Akinsanya
DESIGN OVERSIGHT

SIGN OFF DATE

DESIGN DETAIL SHEET (METRIC) (REV. 3/1/98)
\$DATE\$ \$TIME\$ Pen Table File

ORIGINAL SCALE IN MILLIMETERS FOR REDUCED PLANS 0 10 20 30 40 50 60 70 80 90 100

FILE => p:\bb\04-012001\eti\dgn\akpejd04.dgn

USERNAME => ALee DATE PLOTTED => 5/9/2008 TIME PLOTTED => 3:51:45 PM FILE => p:\bb\04-012001\eti\dgn\akpejd04.dgn

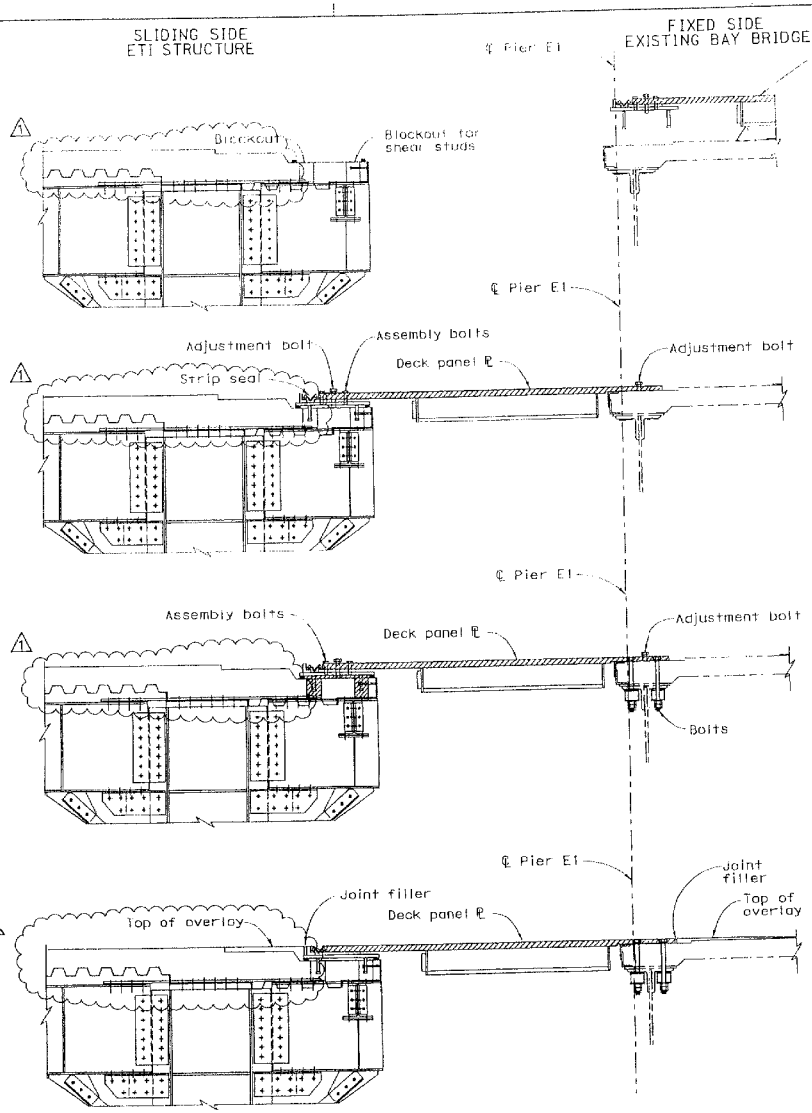

Deck panel plate assemblies

Note: Sequence shown for use of injected grout as bedding material.

Phase 1: Joint situation at completion of Roll-in operation.

1. Deck on sliding side prepared with blockouts to receive the masonry plate and the vertical shear studs.
2. Existing expansion joint has been removed with roll-out of existing YB4 span.
3. Expose concrete surface on the fixed side, cut back asphalt overlay and concrete surface.
   a. Strip seal end block welded to masonry plate. Set correct gap for anticipated installation temperatures.
   b. Strip seals installed in each individual plate assembly.
4. Place deck panel plate assemblies for the Pier E1 expansion joint on the existing cantilever span side prior to Roll-Out-Roll-In operation. The assemblies consist of prefabricated and pre-positioned bearing and masonry plates and completed strip seals.

Phase 2:
- Place leveling grout on the fixed side.
- Place excess thickness of grout as approved by the Engineer.
- Place all five deck panel assemblies in positon across joint opening.
- Lower the plates into the grout on the fixed side with adjustment bolts.
- Adjust deck panel plates to achieve best fit with plan and profile.
- Fix panel height on the sliding side with use of the adjustment bolts.
- Ensure that the perimeter around the areas to be grouted are properly sealed.

Phase 3:
- Inject fast setting grout under low pressure on the sliding side.
- Install bolting on the fixed side as follows:
  1. Withdraw the plastic dowels from the holes, once the grout has set enough to not flow.
  2. Field drill through the holes into the existing concrete deck and flange angle below.
  3. Insert and tighten the Tie-down bolts using the neoprene washer assemblies and lock nuts.
  4. Complete all bolts on the fixed side. (Total 32 bolts per expansion joint)

Phase 4:
- After the grout has achieved initial set, extract the assembly bolts and fill holes with sealant.
- Remove the adjustment bolts and fill holes with sealant.
- Place joint filler strip elements on each side of the expansion joint assemblies.
- 1 Place overlay on each side of the expansion joints feathering to the finished pavement.
- Place silicone seal between deck panel plates.
- Clean up.

Notes:

1. Construction sequence shown for the Pier E1 expansion joint in the upper deck with traffic towards San Francisco. Construction sequence for the Pier E1 expansion joint in the lower deck with traffic towards Oakland, similar.
2. Deck panel assembly weight, including bearing and masonary plates, strip seals and stiffeners is approximately between 5.0 tons and 6.0 tons.
3. To expedite the construction sequence and to maximize efficiency, the Contractor shall provide separate work teams, fully equiped with personnel and equipment, dedicated for each expansion joint location.
4. The Contractor to provide temporary bridges to allow equipment to cross during bedding material curing time without loading the expansion joint plates.

MARK	DATE	DESCRIPTIONS	BY	CH'D	CCO#
1	9/30/08	ELIMINATE DECK OVERLAY	MC	SA	

REVISIONS

CONTRACT CHANGE ORDER NO. 144-S2
SHEET 15 OF 16

Caltrans Metric

DIST	COUNTY	ROUTE	PROJECT ID	SHEET NO.	TOTAL
04			1 6 1 2		

REGISTERED CIVIL ENGINEER
PLANS APPROVAL DATE
The State of California or its officers or agents shall not be responsible for the accuracy or completeness of electronic copies of this plan sheet.

REGISTERED PROFESSIONAL ENGINEER Charles Redfield No. C 27605 Exp. 12/31/09 CIVIL STATE OF CALIFORNIA

T.Y. LIN / MOFFATT & NICHOL
Two Harrison Street, Suite 500
San Francisco, CA 94105

100% PS&E

CONSTRUCTION SEQUENCE

Expansion Joint at Pier E1
NTS

ALL DIMENSIONS ARE IN MILLIMETERS UNLESS OTHERWISE SHOWN

SAN FRANCISCO OAKLAND BAY BRIDGE
EAST SPAN SEISMIC SAFETY PROJECT

EAST TIE-IN

PIER E1 EXPANSION JOINT DETAILS NO. 5

T. Ostrom/M. Whiteside/A. Akinsanya
DESIGN OVERSIGHT
SIGN OFF DATE

	BY	CHECKED
DESIGN	C. Redfield, R. Nutt	S. Cheng
DETAILS	S. Lee, P. Zhao	A. Lee
QUANTITIES	H. Nelson	A. Lee

PREPARED FOR THE STATE OF CALIFORNIA DEPARTMENT OF TRANSPORTATION

M. Sah
PROJECT ENGINEER
S. Abbas
PROJECT MANAGER

BRIDGE NO. 34-0006 (TEMP)
KILOMETER POST 12.6

CU
EA 0120R4

DISREGARD PRINTS BEARING EARLIER REVISION DATES

REVISION DATES (PRELIMINARY STAGE ONLY)

SHEET 104R1 OF 214

ORIGINAL SCALE IN MILLIMETERS FOR REDUCED PLANS 0 10 20 30 40 50 60 70 80 90 100

DESIGN DETAIL SHEET METRIC (REV. 3/1/98)
DATE TIME Pen Table File

FILE => p:\bb\04-0120d1\eti\revision to\akbejd05.dgn

Notes:

1. The Contractor shall verify all controlling field dimensions before ordering or fabricating any material.
2. For Section A-A through G-G, see "Pier E1 Expansion Joint Barrier No. 3" sheet.
3. For details of slotted holes, see Detail 3 on "Bent 52A Expansion Joint Barrier No. 2" sheet.
4. For details of bolts, see Detail 4 on "Bent 52A Expansion Joint Barrier No. 2" sheet.
5. All bolts shall be A325, unless noted otherwise.
6. Concrete fill shall be lightweight (17.3 kN/m or 110 pcf) with f'c=28 MPa.

LEGEND:

- Indicates existing structure
- Indicates steel deck plate with V-grooves at 45°

Caltrans Metric

DIST	COUNTY	ROUTE	KILOMETER POST TOTAL PROJECT	SHEET No.	TOTAL
04	SF	80	12.6/13.2		

REGISTERED CIVIL ENGINEER

10-01-08
PLANS APPROVAL DATE

Charles Redfield No. C 27605 Exp. 12/31/09 CIVIL STATE OF CALIFORNIA

The State of California or its officers or agents shall not be responsible for the accuracy or completeness of electronic copies of this plan sheet.

T.Y. LIN / MOFFATT & NICHOL
Two Harrison Street, Suite 500
San Francisco, CA 94105

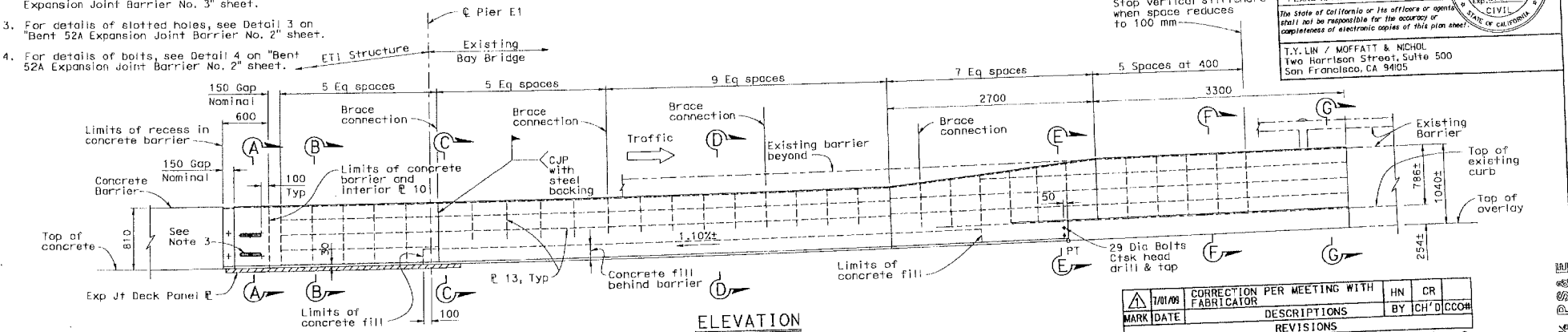

ELEVATION
1:25

MARK	DATE	DESCRIPTIONS	BY	CH'D	CCO#
1	7/01/09	CORRECTION PER MEETING WITH FABRICATOR	HN	CR	

REVISIONS

CONTRACT CHANGE ORDER NO. 144-S2
SHEET 16 OF 16

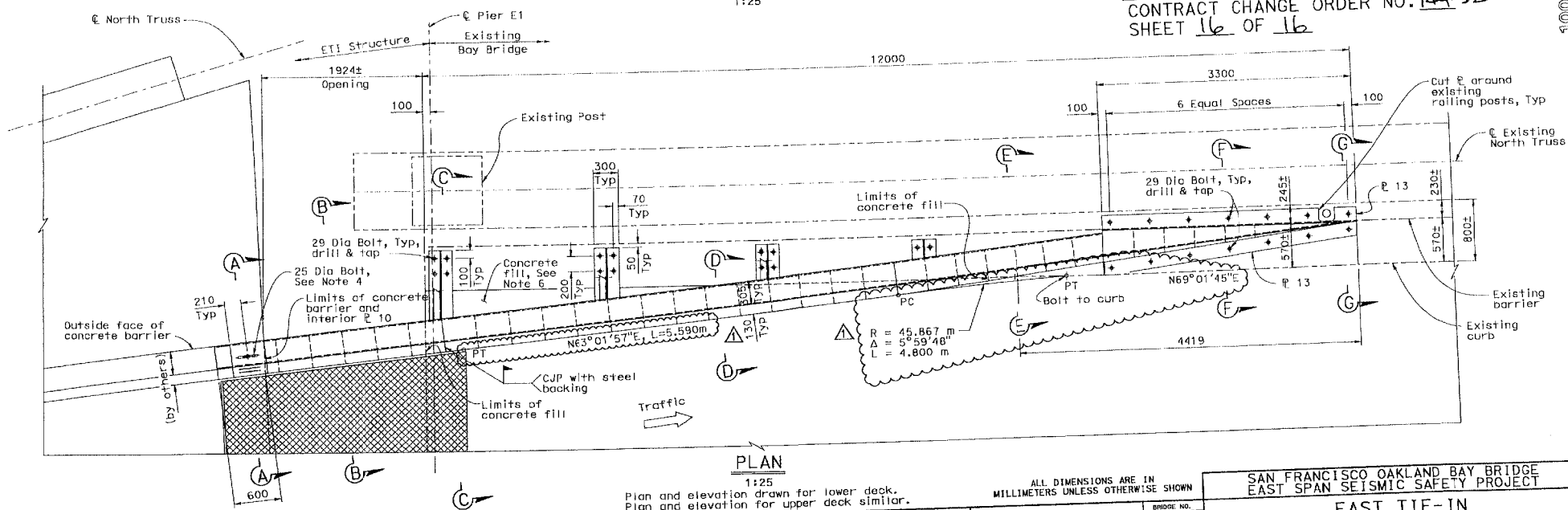

PLAN
1:25
Plan and elevation drawn for lower deck.
Plan and elevation for upper deck similar.

ALL DIMENSIONS ARE IN MILLIMETERS UNLESS OTHERWISE SHOWN

SAN FRANCISCO OAKLAND BAY BRIDGE
EAST SPAN SEISMIC SAFETY PROJECT

EAST TIE-IN

PIER E1 EXPANSION JOINT BARRIER NO. 2

DESIGN	BY C. Redfield, R. Nutt	CHECKED S. Cheng	
DETAILS	BY S. Lee, P. Zhao	CHECKED A. Lee	
QUANTITIES	BY H. Nelson	CHECKED A. Lee	

T. Ostrom/M. Whiteside/A. Akinsanya
DESIGN OVERSIGHT

SIGN OFF DATE

PREPARED FOR THE STATE OF CALIFORNIA
DEPARTMENT OF TRANSPORTATION

M. Soh
PROJECT ENGINEER
S. Abdoo
PROJECT MANAGER
CU
EA 0120R4

BRIDGE NO. 34-0006 (TEMP)
KILOMETER POST 12.6

DISREGARD PRINTS BEARING EARLIER REVISION DATES

REVISION DATES (PRELIMINARY STAGE ONLY)

SHEET 06R OF 214

DESIGN DETAIL SHEET (METRIC) (REV. 3/1/98)
•DATE• •TIME• Pen Table File

ORIGINAL SCALE IN MILLIMETERS FOR REDUCED PLANS 0 10 20 30 40 50 60 70 80 90 100

FILE => p:\bb\04-012001\elt\revision-6_30_09\okpe\b02.dgn

100% PS&E

FILE => p:\bb\04-012001\elt\revision-6_30_09\okpe\b02.dgn
TIME PLOTTED => 3:08:29 PM
DATE PLOTTED => 7/1/2009
USERNAME => Alee

STATE OF CALIFORNIA - DEPARTMENT OF TRANSPORTATION

CONTRACT CHANGE ORDER MEMORANDUM

TO: MIKE FORNER / DEANNA VILCHECK	FILE: E.A. 04 - 0120R4
	CO-RTE-PM SF-80-12.6/13.2
FROM: BILL CASEY	FED. NO. ACBRIM-080-1(097)N
CCO#: **144** SUPPLEMENT#: **2** Category Code: **CHPA**	CONTINGENCY BALANCE (incl. this change) **$35,208,157.59**
COST: **$0.00** INCREASE ☐ DECREASE ☐	HEADQUARTERS APPROVAL REQUIRED? ☑ YES ☐ NO
SUPPLEMENTAL FUNDS PROVIDED: **$0.00**	IS THIS REQUEST IN ACCORDANCE WITH ENVIRONMENTAL DOCUMENTS? ☑ YES ☐ NO
CCO DESCRIPTION: Revised ETI Expansion Joint Plan Sheets	**PROJECT DESCRIPTION:** CONSTRUCT ROUTE 80 TEMP BYPASS STRUCTURE

Original Contract Time:	Time Adj. This Change:	Previously Approved CCO Time Adjustments:	Percentage Time Adjusted: (including this change)	Total # of Unreconciled Deferred Time CCO(s): (including this change)
475 Day(s)	**DEF** Day(s)	**1195** Day(s)	**252** %	**8**

THIS CHANGE ORDER PROVIDES FOR:

design revisions to the expansion joints of the East Tie-In (ETI) structure.

This project, the Yerba Buena Island Detour (YBID), was awarded in March 2004 to construct a detour that will allow for the tie in of the new east span of the San Francisco Oakland Bay Bridge to Yerba Buena Island. The YBID encompasses three main structures, the East Tie-In to the existing bridge, the West Tie-In (WTI) to Yerba Buena Island, and the Viaduct structure between the two tie ins.

A December 14, 2006 Department strategy memorandum, approved by Tony Anziano, Toll Bridge Program Manager, and Richard Land, Chief Engineer, recommended that the Department assume the design responsibility for the East Tie-In (ETI) portion of this contract. Based on this memorandum, the design of the structure was changed from a design that incorporated the existing steel truss bridge with the new structure to a design that replaces the existing structure with a new structure (roll out / roll in).

The original Contract Change Order No. 144, along with Supplement No. 1, provided the plans and specifications necessary for the fabrication of the 4 expansion joints of the ETI structure and provided compensation for the this fabrication as extra work at force account. This change order incorporates numerous changes to the originally issued plan sheets for the expansion joints as issued by Toll Bridge Design.

It is anticipated that the current force account funding shall be adequate to compensate the contractor for any additional costs resulting from these design revisions.

Adjustment of contract time is deferred pending completion of the work specified in this change as it may become the controlling operation in accordance with Section 8-1.07 "Liquidated Damages", of the Standard Specifications and Section 10-1.20 "Time Related Overhead (TRO)" of the Special Provisions.

Compensation for delays resulting from this work will be made in accordance with Section 8-1.09 "Right of Way Delays" of the Standard Specifications and Section 10-1.20 "Time Related Overhead" of the Special Provisions.

This change was requested by Mike Whiteside - YBI Coordination Engineer per memorandum dated May 18, 2009 and concurred by Hong Wong - Project Engineer, Alec Melkonians - Asst. Project Manager, and Lina Ellis - Structure Maintenance.

ADA Notice: For individuals with sensory disabilities, this document is available in alternate formats. For information call: (916) 654-6410 or TDD (916) 654-3880 or write Records and Forms Management, 1120 N Street, MS-89, Sacramento, CA 95814.

CONCURRED BY:			
Construction Engineer:	Bill Casey, Resident Engineer	Date	6/30/09
Bridge Engineer:	Mike Whiteside, Toll Bridge Design	Date	5/18/09
Project Engineer:	Hong Wong, PE	Date	6/5/09
Project Manager:	Alec Melkonians	Date	6/4/09
FHWA Rep.:		Date	
Environmental:		Date	
Other (specify):		Date	
Other (specify):		Date	
District Prior Approval By:		Date	
HQ (Issue Approve) By:	Bob Molera, HQ CCO Engineer	Date	7/1/09
Resident Engineer's Signature:		Date	6-30-09

ESTIMATE OF COST

	THIS REQUEST	TOTAL TO DATE
ITEMS	$0.00	$0.00
FORCE ACCOUNT	$0.00	$3,750,000.00
AGREED PRICE	$0.00	$0.00
ADJUSTMENT	$0.00	$0.00
TOTAL	$0.00	$3,750,000.00

FEDERAL PARTICIPATION

☐ PARTICIPATING ☐ PARTICIPATING IN PART ☑ NONE
☐ NON-PARTICIPATING (MAINTENANCE) ☐ NON-PARTICIPATING

FEDERAL SEGREGATION (if more than one Funding Source or P.I.P. type)
☐ CCO FUNDED PER CONTRACT ☐ CCO FUNDED AS FOLLOWS

FEDERAL FUNDING SOURCE	PERCENT

ADA Notice: For individuals with sensory disabilities, this document is available in alternate formats. For information call: (916) 654-6410 or TDD (916) 654-3880 or write Records and Forms Management, 1120 N Street, MS-89, Sacramento, CA 95814.

STATE OF CALIFORNIA - DEPARTMENT OF TRANSPORTATION

CONTRACT CHANGE ORDER

Change Requested by: Engineer

CCO 144	Suppl. No. 3	Contract No. 04 - 0120R4	Road SF-80-12.6/13.2	FED. AID LOC.:

To: **CC MYERS INC**

You are directed to make the following changes from the plans and specifications or do the following described work not included in the plans and specifications for this contract. ***NOTE: This change order is not effective until approved by the Engineer.***

Description of work to be done, estimate of quantities and prices to be paid. (Segregate between additional work at contract price, agreed price and force account.) Unless otherwise stated, rates for rental of equipment cover only such time as equipment is actually used and no allowance will be made for idle time. This last percentage shown is the net accumulated increase or decrease from the original quantity in the Engineer's Estimate.

Extra Work at Force Account:

Provide additional funds.

Estimated Cost of Extra Work at Force Account $1,000,000.00

RECEIVED
011568 FEB 12 09

Estimated Cost: Increase ☑ Decrease ☐ **$1,000,000.00**

By reason of this order the time of completion will be adjusted as follows: 0 days

Submitted by

Signature	Resident Engineer	Date
[signature]	BILL CASEY	11-19-09

Approval Recommended by

Signature	SFOBB Construction Manager	Date
Michael Forner	MIKE FORNER	11-20-2009

Engineer Approval by

Signature	SFOBB Construction Manager	Date
Michael Forner	MIKE FORNER	12/24/2009

We the undersigned contractor, have given careful consideration to the change proposed and agree, if this proposal is approved, that we will provide all equipment, furnish the materials, except as may otherwise be noted above, and perform all services necessary for the work above specified, and will accept as full payment therefor the prices shown above.

NOTE: If you, the contractor, do not sign acceptance of this order, your attention is directed to the requirements of the specifications as to proceeding with the ordered work and filing a written protest within the time therein specified.

Contractor Acceptance by

Signature	(Print name and title)	Date
N/A	N/A	N/A

STATE OF CALIFORNIA - DEPARTMENT OF TRANSPORTATION

CONTRACT CHANGE ORDER MEMORANDUM

TO: MIKE FORNER / DEANNA VILCHECK	FILE: E.A. 04 - 0120R4
	CO-RTE-PM SF-80-12.6/13.2
FROM: BILL CASEY	FED. NO.
CCO#: **144** SUPPLEMENT#: **3** Category Code: **CHPA**	CONTINGENCY BALANCE (incl. this change) **$46,571,251.59**
COST: **$1,000,000.00** INCREASE ☑ DECREASE ☐	HEADQUARTERS APPROVAL REQUIRED? ☑ YES ☐ NO
SUPPLEMENTAL FUNDS PROVIDED: **$0.00**	IS THIS REQUEST IN ACCORDANCE WITH ENVIRONMENTAL DOCUMENTS? ☑ YES ☐ NO
CCO DESCRIPTION: Additional Funds for Expansion Joints	**PROJECT DESCRIPTION:** CONSTRUCT ROUTE 80 TEMP BYPASS STRUCTURE

Original Contract Time:	Time Adj. This Change:	Previously Approved CCO Time Adjustments:	Percentage Time Adjusted: (including this change)	Total # of Unreconciled Deferred Time CCO(s): (including this change)
475 Day(s)	**0** Day(s)	**1660** Day(s)	**349** %	**7**

THIS CHANGE ORDER PROVIDES FOR:

Additional funding to provide for the fabrication of the East Tie-In (ETI) expansion joints.

This project, the Yerba Buena Island Detour (YBID), was awarded in March 2004 to construct a detour that will allow for the tie in of the new east span of the San Francisco Oakland Bay Bridge to Yerba Buena Island. The YBID encompasses three main structures, the East Tie-In to the existing bridge, the West Tie-In (WTI) to Yerba Buena Island, and the Viaduct structure between the two tie ins.

Two separate Department strategy memorandums, dated December 14, 2006 and December 25, 2006, approved by Tony Anziano - Toll Bridge Program Manager and Richard Land - Chief Engineer, recommended that the Department assume responsibility for the designs of the East Tie-In (ETI) and West Tie-In (WTI) portions of this contract, and incorporated seismic retrofit work of the permanent Yerba Buena Island Transition Structure (YBITS) onto this project. Based on these memorandums, the design of the structure was changed from a design that incorporated the existing steel truss bridge with the new structure to a design that replaces the existing structure with a new structure (roll out / roll in).

The original Change Order No. 144, including Supplement No. 1, provided the plans and specifications necessary for the fabrication of the 4 permanent expansion joints, each approximately 18 meters long and 3 meters wide, for the ETI structure. Those change orders also provided compensation for the actual fabrication of the expansion joints along with the fabrication of a mock up joint for testing its properties and installation method. That change order provided for the work to be performed as extra work at force account. Supplement No. 2 incorporated design changes to the originally issued plan sheets for the expansion joints as issued by Toll Bridge Design.

It is anticipated that the current force account funding shall be inadequate. Unanticipated costs will be incurred due to the revised design and delays to the fabrication stemming from these design changes. The contractor was required to perform extensive modifications to the floor beam under the joints at Pier E1 and also acted to mitigate the Department design delay by working extended hours on the fabrication. Shop drawings also had to be modified due to the design change.

The work shall be compensated as extra work at force account for an estimated cost of $1,000,000.00 which shall be financed from the contract contingency funds. A cost analysis is on file.

The Contractor's signature is not required for additional funds for Extra Work at Force Account change orders. Therefore this change order is being issued unilaterally.

No adjustment of contract time is warranted as the change will not affect the controlling operation.

This change was concurred with by Alec Melkonians - Asst. Project Manager and Minh B. Nguyen - Project Engineer. TBPOC approval pending.

Maintenance concurrence is not required as this is an administrative change.

ADA Notice: For individuals with sensory disabilities, this document is available in alternate formats. For information call: (916) 654-6410 or TDD (916) 654-3880 or write Records and Forms Management, 1120 N Street, MS 89, Sacramento, CA 95814

CONCURRED BY:		
Construction Engineer:	Bill Casey, Resident Engineer	Date 11-19-09
Bridge Engineer:		Date
Project Engineer:	Minh B. Nguyen, PE	Date 11-24-09
Project Manager:	Alec Melkonians	Date 11-10-09
FHWA Rep.:		Date
Environmental:		Date
Other (specify):		Date
Other (specify):		Date
District Prior Approval By:		Date
HQ (Issue Approve) By:	Bob Molera, HQ CCO Engineer	Date
Resident Engineer's Signature:		Date 11-19-09

ESTIMATE OF COST

	THIS REQUEST	TOTAL TO DATE
ITEMS	$0.00	$0.00
FORCE ACCOUNT	$1,000,000.00	$4,750,000.00
AGREED PRICE	$0.00	$0.00
ADJUSTMENT	$0.00	$0.00
TOTAL	$1,000,000.00	$4,750,000.00

FEDERAL PARTICIPATION

☐ PARTICIPATING ☐ PARTICIPATING IN PART ☑ NONE
☐ NON-PARTICIPATING (MAINTENANCE) ☐ NON-PARTICIPATING

FEDERAL SEGREGATION (if more than one Funding Source or P.I.P. type)
☐ CCO FUNDED PER CONTRACT ☐ CCO FUNDED AS FOLLOWS

FEDERAL FUNDING SOURCE	PERCENT

ADA Notice: For individuals with sensory disabilities, this document is available in alternate formats. For information call: (916) 654-6410 or TDD (916) 654-3880 or write Records and Forms Management, 1120 N Street, MS-89, Sacramento, CA 95814

CONTRACT CHANGE ORDER

Change Requested by: Engineer

CCO 145	Suppl. No. 0	Contract No. 04 - 0120R4	Road SF-80-12.6/13.2	FED. AID LOC.: ACBRIM-080-1(097)N

To: **CC MYERS INC**

You are directed to make the following changes from the plans and specifications or do the following described work not included in the plans and specifications for this contract. ***NOTE: This change order is not effective until approved by the Engineer.***

Description of work to be done, estimate of quantities and prices to be paid. (Segregate between additional work at contract price, agreed price and force account.) Unless otherwise stated, rates for rental of equipment cover only such time as equipment is actually used and no allowance will be made for idle time. This last percentage shown is the net accumulated increase or decrease from the original quantity in the Engineer's Estimate.

Incorporate the revised mass concrete specification, as shown Sheet No. 2 of this change order, pertaining to the construction of Bents W3R, W5L, W5R, W6R (South), W7L and W7R of the Yerba Buena Island Transition Structure (Br. No. 34-0006L/R) and Bent W7 of the YBI EB On-Ramp Structure (Br. No. 34-0006 R). This specification supersedes any previous mass concrete specifications issued for this work

Any adjustment of compensation for the eliminated and added work resulting from this change order is deferred and shall be provided for under a supplemental change order.

Estimated Cost: **Increase** ☐ **Decrease** ☐ **$0.00**

By reason of this order the time of completion will be adjusted as follows: 0 days

Submitted by		
Signature	**Resident Engineer** BILL CASEY	**Date** 7-19-09
Approval Recommended by		
Signature Deanna Vilcheck	**Area Construction Manager** DEANNA VILCHECK	**Date** 7/21/09
Engineer Approval by		
Signature Deanna Vilcheck	**Area Construction Manager** DEANNA VILCHECK	**Date** 8/13/09

We the undersigned contractor, have given careful consideration to the change proposed and agree, if this proposal is approved, that we will provide all equipment, furnish the materials, except as may otherwise be noted above, and perform all services necessary for the work above specified, and will accept as full payment therefor the prices shown above.

NOTE: If you, the contractor, do not sign acceptance of this order, your attention is directed to the requirements of the specifications as to proceeding with the ordered work and filing a written protest within the time therein specified.

Contractor Acceptance by		
Signature	**(Print name and title)** STEVE FRANCIS, CHIEF ESTIMATOR	**Date** 8-3-09

MASS CONCRETE

Mass concrete shall conform to the requirements of Section 90, "Portland Cement Concrete," of the Standard Specifications and these special provisions.

Components listed in the table below shall be considered mass concrete:

Location	Mass Concrete Components
Bents W3L, W4L, W5L, W6L, W3R, W4R, W5R, W6R (North), W6R (South), W7	Footing

The temperature of mixed concrete, immediately before placing, shall be not more than 85°F. Use of ice or chilled water may be necessary to satisfy the above temperature requirements.

Materials

The concrete mix shall be the previously approved mix design (Central Concrete Mix Design No. HF591212), submitted in Document No. 215-SUB.00141-00 dated May 14, 2007.

Construction

Methods of concrete consolidation shall prevent damage to any temperature monitoring and recording system that may be installed by the Engineer.

After the mass concrete pour has been topped out and finished, it shall be revibrated and refinished. Revibration shall extend below the top mat of reinforcement and shall be done as late as the concrete will again respond to vibration. For concrete pours without top reinforcement, revibration shall extend to a depth of 150 mm.

The mass concrete shall be water cured for a minimum of 3 days after placement. Exposed concrete surface shall be insulated with a minimum R-2 ½ insulation one day after placement and shall remain in place for a minimum of one day but no more than 2 days.

After curing, the Contractor shall remove all equipment and materials from the mass concrete element and clean the surface for the Engineer's inspection.

Full compensation for conforming to the above requirements shall be considered as included in the contract prices paid for the various contract items of work involved and no additional compensation will be allowed therefor.

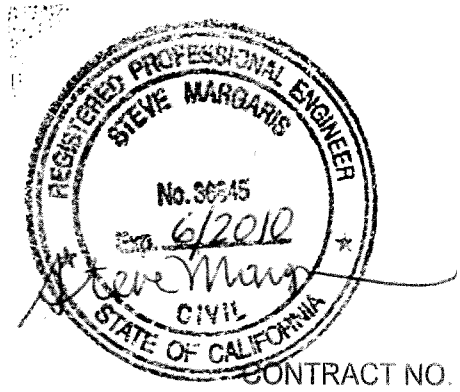

CONTRACT NO. 04-0120R4

CONTRACT CHANGE ORDER NO 145

SHEET 2 OF 2

STATE OF CALIFORNIA - DEPARTMENT OF TRANSPORTATION

CONTRACT CHANGE ORDER

Change Requested by: Engineer

CCO: 145	Suppl. No. 1	Contract No. 04 - 0120R4	Road SF-80-12.6/13.2	FED. AID LOC.:

To: CC MYERS INC

You are directed to make the following changes from the plans and specifications or do the following described work not included in the plans and specifications for this contract. ***NOTE: This change order is not effective until approved by the Engineer.***

Description of work to be done, estimate of quantities and prices to be paid. (Segregate between additional work at contract price, agreed price and force account.) Unless otherwise stated, rates for rental of equipment cover only such time as equipment is actually used and no allowance will be made for idle time. This last percentage shown is the net accumulated increase or decrease from the original quantity in the Engineer's Estimate.

Adjustment of Compensation at Lump Sum:

For costs savings resulting from implementing the revised mass concrete specification, as specified under the original Change Order No. 145, pertaining to the construction of Bents W3R, W5L, W5R, W6R (South), W7L and W7R of the Yerba Buena Island Transition Structure (Br. No. 34-0006L/R) and Bent W7 of the YBI EB On-Ramp Structure (Br. No. 34-0006 R), the Contractor shall credit the Department an agreed lump sum of $657,000.00 for the net savings resulting from the revised specification. The credit constitutes full resolution of all outstanding costs resulting from the original Change Order No. 145.

Estimated cost of Adjustment of Compensation at Lump Sum .....($657,000.00)

RECEIVED
011784 JUN-8 10

Estimated Cost: Increase ☐ Decrease ☑ **($657,000.00)**

By reason of this order the time of completion will be adjusted as follows: 0 days

Submitted by

Signature	Resident Engineer	Date
[signature]	BILL CASEY	1-28-10

Approval Recommended by

Signature	Area Construction Manager	Date
Deanna Vilcheck	DEANNA VILCHECK	1/29/10

Engineer Approval by

Signature	Area Construction Manager	Date
Deanna Vilcheck	DEANNA VILCHECK	3/22/10

We the undersigned contractor, have given careful consideration to the change proposed and agree, if this proposal is approved, that we will provide all equipment, furnish the materials, except as may otherwise be noted above, and perform all services necessary for the work above specified, and will accept as full payment therefor the prices shown above.

NOTE: If you, the contractor, do not sign acceptance of this order, your attention is directed to the requirements of the specifications as to proceeding with the ordered work and filing a written protest within the time therein specified.

Contractor Acceptance by

Signature	(Print name and title)	Date
[signature]	DANIEL E. HIMICK, PRESIDENT	2/26/10

STATE OF CALIFORNIA - DEPARTMENT OF TRANSPORTATION

CONTRACT CHANGE ORDER MEMORANDUM

DATE: 1/28/2010

TO: MIKE FORNER / DEANNA VILCHECK	FILE: E.A. 04 - 0120R4
FROM: JEANNIE BALDERRAMOS	CO-RTE-PM SF-80-12.6/13.2
	FED. NO.
CCO#: **145** SUPPLEMENT#: **1** Category Code: **CHSA**	CONTINGENCY BALANCE (incl. this change) **$41,811,803.59**
COST: **($657,000.00)** INCREASE ☐ DECREASE ☑	HEADQUARTERS APPROVAL REQUIRED? ☑ YES ☐ NO
SUPPLEMENTAL FUNDS PROVIDED: **$0.00**	IS THIS REQUEST IN ACCORDANCE WITH ENVIRONMENTAL DOCUMENTS? ☑ YES ☐ NO
CCO DESCRIPTION: Credit for Eliminated Mass Concrete Spec	**PROJECT DESCRIPTION:** CONSTRUCT ROUTE 80 TEMP BYPASS STRUCTURE

Original Contract Time:	Time Adj. This Change:	Previously Approved CCO Time Adjustments:	Percentage Time Adjusted: (including this change)	Total # of Unreconciled Deferred Time CCO(s): (including this change)
475 Day(s)	**0** Day(s)	**1660** Day(s)	**349** %	**0**

THIS CHANGE ORDER PROVIDES FOR:

A credit to the Department for the revisions to the mass concrete specification for Bents W3R, W5L, W5R, W6R (South), W7L and W7R of the Yerba Buena Island Transition Structure (Br. No. 34-0006L/R) and Bent W7 of the YBI EB On-Ramp Structure (Br. No. 34-0006 R).

This project was awarded in March 2004 to construct a detour that will allow for the tie in of the new east span of the San Francisco Oakland Bay Bridge to Yerba Buena Island. The TBS encompasses three main structures, the East Tie-In to the existing bridge, the West Tie-In (WTI) to Yerba Buena Island and the Viaduct structure between the two tie ins.

The Department issued a December 25, 2006 strategy memo which was approved by Tony Anziano (Toll Bridge Program Manager), Richard Land (Chief Engineer) and subsequently by the TBPOC that called for the advance construction of foundation work for the Yerba Buena Island Transition Structure (YBITS) under this contract.

Change Orders No. 64, 73, 75 and 77 have been issued to provide for the advanced construction of 13 footings and columns for Bents W3L, W3R, W4L, W4R, W5L, W5R, W6L, W6R and W7 of the YBITS project. These change orders provided for a thermal control plan to be implemented to the mass concrete pertaining to the footings being constructed. This thermal control plan included a mechanical cooling system which controlled the temperature of the curing concrete by circulating cooled water through the footings during its curing via cooling pipes that were installed inside the footing prior to the placement of concrete.

The original Change Order No. 145 implemented a revised mass concrete specification that calls for additional vibration of the concrete and a more typical water cure in lieu of the previously specified thermal control plan. This revision was applied to the remaining 7 footings that had not been constructed prior to the revised specification being issued. The original change order deferred any costs adjustment resulting from the specification change.

No adjustment of contract time is warranted as the work will not affect the controlling operation.

This change was requested by Mike Whiteside - YBI Coordination Engineer, per Memorandum dated May 23, 2008 and concurred with by Alec Melkonians - Asst. Project Manager, Jaime Gutierrez - Project Engineer, and Lina Ellis - Maintenance.

ADA Notice: For individuals with sensory disabilities, this document is available in alternate formats. For information call: (916) 654-6410 or TDD (916) 654-3880 or write

CONCURRED BY:			
Construction Engineer:	Bill Casey, Resident Engineer	Date	1/28/10
Bridge Engineer:	Mike Whiteside, Toll Bridge Design	Date	5/23/08
Project Engineer:	Jaime Gutierrez, PE	Date	4/9/10
Project Manager:	Alec Melkonians, PM	Date	1/28/10
FHWA Rep.:		Date	
Environmental:		Date	
Other (specify):	Lina Ellis, Maintenance	Date	4/19/10
Other (specify):		Date	
District Prior Approval By:		Date	
HQ (Issue Approve) By:	Larry Salhaney, HQ CCO Engine	Date	1/29/10
Resident Engineer's Signature: Jeannie Baldwin		Date	4/19/10

ESTIMATE OF COST

	THIS REQUEST	TOTAL TO DATE
ITEMS	$0.00	$0.00
FORCE ACCOUNT	$0.00	$0.00
AGREED PRICE	$0.00	$0.00
ADJUSTMENT	($657,000.00)	($657,000.00)
TOTAL	($657,000.00)	($657,000.00)

FEDERAL PARTICIPATION

☐ PARTICIPATING ☐ PARTICIPATING IN PART ☑ NONE
☐ NON-PARTICIPATING (MAINTENANCE) ☐ NON-PARTICIPATING

FEDERAL SEGREGATION (if more than one Funding Source or P.I.P. type)
☐ CCO FUNDED PER CONTRACT ☐ CCO FUNDED AS FOLLOWS

FEDERAL FUNDING SOURCE	PERCENT

ADA Notice: For individuals with sensory disabilities, this document is available in alternate formats. For information call: (916) 654-6410 or TDD (916) 654-3880 or write Records and Forms Management, 1120 N Street, MS-89, Sacramento, CA 95814

CONTRACT CHANGE ORDER

Change Requested by: Engineer

CCO 146	Suppl. No. 0	Contract No. 04 - 0120R4	Road SF-80-12.6/13.2	FED. AID LOC.: ACBRIM-080-1(097)N

To: CC MYERS INC

You are directed to make the following changes from the plans and specifications or do the following described work not included in the plans and specifications for this contract. ***NOTE: This change order is not effective until approved by the Engineer.***

Description of work to be done, estimate of quantities and prices to be paid. (Segregate between additional work at contract price, agreed price and force account.) Unless otherwise stated, rates for rental of equipment cover only such time as equipment is actually used and no allowance will be made for idle time. This last percentage shown is the net accumulated increase or decrease from the original quantity in the Engineer's Estimate.

Extra Work at Force Account:

As authorized by the Engineer, perform tree trimming of limbs that extend out and up to 20 feet above the roadway surface along Macalla Road and any bush/shrub trimming that pose a potential fire hazard within the project limits.

All disposal of tree cuttings shall be provided and paid for under this change. The Contractor shall make his own arrangements for the disposal of tree cuttings outside the highway right of way.

Estimated Cost of Extra Work at Force Account $50,000.00

Estimated Cost: Increase ☑ Decrease ☐ **$50,000.00**

By reason of this order the time of completion will be adjusted as follows: 0 days

Submitted by

Signature	Resident Engineer BILL CASEY	Date 7-5-09

Approval Recommended by

Signature	Area Construction Manager DENNIS TURCHON	Date 7/10/08

Engineer Approval by

Signature	Area Construction Manager DENNIS TURCHON	Date 7/21/08

We the undersigned contractor, have given careful consideration to the change proposed and agree, if this proposal is approved, that we will provide all equipment, furnish the materials, except as may otherwise be noted above, and perform all services necessary for the work above specified, and will accept as full payment therefor the prices shown above.

NOTE: If you, the contractor, do not sign acceptance of this order, your attention is directed to the requirements of the specifications as to proceeding with the ordered work and filing a written protest within the time therein specified.

Contractor Acceptance by

Signature	(Print name and title)	Date
Dewey C Lee, Jr	DEWEY C. LEE JR. Contract Manager	7/17/08

CONTRACT CHANGE ORDER

Change Requested by: Engineer

CCO 146	Suppl. No. 1	Contract No. 04 - 0120R4	Road SF-80-12.6/13.2	FED. AID LOC.: ACBRIM-080-1(097)N

To: CC MYERS INC

You are directed to make the following changes from the plans and specifications or do the following described work not included in the plans and specifications for this contract. ***NOTE: This change order is not effective until approved by the Engineer.***

Description of work to be done, estimate of quantities and prices to be paid. (Segregate between additional work at contract price, agreed price and force account.) Unless otherwise stated, rates for rental of equipment cover only such time as equipment is actually used and no allowance will be made for idle time. This last percentage shown is the net accumulated increase or decrease from the original quantity in the Engineer's Estimate.

Extra Work at Force Account:

Provide additional funds.

As authorized by the Engineer, perform tree trimming of limbs that extend out and up to 20 feet above the roadway surface along Macalla Road and any bush/shrub trimming that pose a potential fire hazard within the project limits.

All disposal of tree cuttings shall be provided and paid for under this change. The Contractor shall make his own arrangements for the disposal of tree cuttings outside the highway right of way.

Estimated Cost of Extra Work at Force Account $50,000.00

RECEIVED
01 JUN 23 10:47

RECEIVED
JUN 23 10

Estimated Cost: Increase ☑ Decrease ☐ $50,000.00

By reason of this order the time of completion will be adjusted as follows: 0 days

Submitted by

Signature	Resident Engineer	Date
	BILL CASEY	11-13-08

Approval Recommended by

Signature	Area Construction Manager	Date
Deanna Vilcheck	DEANNA VILCHECK	11/18/08

Engineer Approval by

Signature	Area Construction Manager	Date
Deanna Vilcheck	DEANNA VILCHECK	11/18/08

We the undersigned contractor, have given careful consideration to the change proposed and agree, if this proposal is approved, that we will provide all equipment, furnish the materials, except as may otherwise be noted above, and perform all services necessary for the work above specified, and will accept as full payment therefor the prices shown above.

NOTE: **If you, the contractor, do not sign acceptance of this order, your attention is directed to the requirements of the specifications as to proceeding with the ordered work and filing a written protest within the time therein specified.**

Contractor Acceptance by

Signature	(Print name and title)	Date
NOT APPLICABLE		

STATE OF CALIFORNIA - DEPARTMENT OF TRANSPORTATION

CONTRACT CHANGE ORDER MEMORANDUM

DATE: 11/7/2008 Page 1 of 1

TO: MIKE FORNER / DEANNA VILCHECK

FROM: BILL CASEY

FILE: E.A. 04 - 0120R4
CO-RTE-PM SF-80-12.6/13.2
FED. NO. ACBRIM-080-1(097)N

CCO#: **146** SUPPLEMENT#: **1** Category Code: **CEXX**

CONTINGENCY BALANCE (incl. this change) **$84,590,119.14**

COST: **$50,000.00** INCREASE ☑ DECREASE ☐

HEADQUARTERS APPROVAL REQUIRED? ☐ YES ☑ NO

SUPPLEMENTAL FUNDS PROVIDED: **$0.00**

IS THIS REQUEST IN ACCORDANCE WITH ENVIRONMENTAL DOCUMENTS? ☑ YES ☐ NO

CCO DESCRIPTION:
Add Funds Macalla Road Tree Trimming

PROJECT DESCRIPTION:
CONSTRUCT ROUTE 80 TEMP BYPASS STRUCTURE

Original Contract Time:	Time Adj. This Change:	Previously Approved CCO Time Adjustments:	Percentage Time Adjusted: (including this change)	Total # of Unreconciled Deferred Time CCO(s): (including this change)
475 Day(s)	**0** Day(s)	**1195** Day(s)	**252** %	**7**

THIS CHANGE ORDER PROVIDES FOR:

providing additional funds for tree trimming of limbs that extend out and up to 20 feet above the roadway surface along Macalla Road and any bush/shrub trimming that pose a potential fire hazard within the project limits.

This change was originally requested by Alec Melkonians - Project Manager per memorandum dated June 3, 2008. This change order is necessary to eliminate / reduce potential fire hazards along Macalla Road and elsewhere within the project limits.

The Contractor shall be compensated for this work at Extra Work at Force Account for an estimated cost of $ 50,000.00. The tree and bush trimming work will be paid for under Section 9-1.03B, Work Performed by Special Forces or Other Special Services, of the Standard Specifications. This change can be financed by the contract's contingency funds. A cost analysis is on file and is in the project records.

The Contractor's signature is not required for additional funds for Extra Work at Force Account change orders. Therefore this change order is being issued unilaterally.

Adjustment to contract time in not warranted as this change does not affect the controlling operation.

FHWA authorzation is no longer required as federal authorization and funding for this project has been officially withdrawn.

This change was concurred by Alec Melkonians - Asst. Project Manager.

CONCURRED BY:

Construction Engineer:	Bill Casey, Resident Engineer	Date 11-13-08
Bridge Engineer:		Date
Project Engineer:		Date
Project Manager:	Alec Melkonians	Date 11/12/08
FHWA Rep.:		Date
Environmental:		Date
Other (specify):		Date
Other (specify):		Date
District Prior Approval By:		Date
HQ (Issue Approve) By:		Date
Resident Engineer's Signature:		Date

11-13-08

ESTIMATE OF COST

	THIS REQUEST	TOTAL TO DATE
ITEMS	$0.00	$0.00
FORCE ACCOUNT	$50,000.00	$100,000.00
AGREED PRICE	$0.00	$0.00
ADJUSTMENT	$0.00	$0.00
TOTAL	$50,000.00	$100,000.00

FEDERAL PARTICIPATION

☐ PARTICIPATING ☐ PARTICIPATING IN PART ☐ NONE
☐ NON-PARTICIPATING (MAINTENANCE) ☑ NON-PARTICIPATING

FEDERAL SEGREGATION (if more than one Funding Source or P.I.P. type)
☐ CCO FUNDED PER CONTRACT ☐ CCO FUNDED AS FOLLOWS

FEDERAL FUNDING SOURCE	PERCENT

ADA Notice: For individuals with sensory disabilities, this document is available in alternate formats. For information call: (916) 654-6410 or TDD (916) 654-3880 or write Records and Forms Management, 1120 N Street, MS-89, Sacramento, CA 95814.

STATE OF CALIFORNIA - DEPARTMENT OF TRANSPORTATION

CONTRACT CHANGE ORDER

Change Requested by: Engineer

CCO: 146	Suppl. No. 2	Contract No. 04 - 0120R4	Road SF-80-12.6/13.2	FED. AID LOC.:

To: CC MYERS INC

You are directed to make the following changes from the plans and specifications or do the following described work not included in the plans and specifications for this contract. ***NOTE: This change order is not effective until approved by the Engineer.***

Description of work to be done, estimate of quantities and prices to be paid. (Segregate between additional work at contract price, agreed price and force account.) Unless otherwise stated, rates for rental of equipment cover only such time as equipment is actually used and no allowance will be made for idle time. This last percentage shown is the net accumulated increase or decrease from the original quantity in the Engineer's Estimate.

Extra Work at Force Account:

PROVIDE ADDITIONAL FUNDS.

Estimated cost of Extra Work at Force Account $80,000.00

MB

Estimated Cost: Increase ☑ Decrease ☐ **$80,000.00**

By reason of this order the time of completion will be adjusted as follows: 0 days

Submitted by

Signature Deanna Vilcheck	Resident Engineer for BILL CASEY	Date 2/11/10

Approval Recommended by

Signature Deanna Vilcheck	Area Construction Manager DEANNA VILCHECK	Date 2/11/10

Engineer Approval by

Signature Deanna Vilcheck	Area Construction Manager DEANNA VILCHECK	Date 2/11/10

We the undersigned contractor, have given careful consideration to the change proposed and agree, if this proposal is approved, that we will provide all equipment, furnish the materials, except as may otherwise be noted above, and perform all services necessary for the work above specified, and will accept as full payment therefor the prices shown above.

NOTE: If you, the contractor, do not sign acceptance of this order, your attention is directed to the requirements of the specifications as to proceeding with the ordered work and filing a written protest within the time therein specified.

Contractor Acceptance by

Signature N/A	(Print name and title)	Date

STATE OF CALIFORNIA - DEPARTMENT OF TRANSPORTATION

CONTRACT CHANGE ORDER MEMORANDUM

TO: MIKE FORNER / DEANNA VILCHECK	FILE: **E.A.** 04 - 0120R4
	CO-RTE-PM SF-80-12.6/13.2
FROM: BILL CASEY	**FED. NO.**
CCO#: **146** SUPPLEMENT#: **2** Category Code: **CEXX**	CONTINGENCY BALANCE (incl. this change) **$41,284,404.59**
COST: **$80,000.00** INCREASE ☑ DECREASE ☐	HEADQUARTERS APPROVAL REQUIRED? ☐ YES ☑ NO
SUPPLEMENTAL FUNDS PROVIDED: **$0.00**	IS THIS REQUEST IN ACCORDANCE WITH ENVIRONMENTAL DOCUMENTS? ☑ YES ☐ NO
CCO DESCRIPTION: Add Funds Macalla Road Tree Trimming	**PROJECT DESCRIPTION:** CONSTRUCT ROUTE 80 TEMP BYPASS STRUCTURE

Original Contract Time:	Time Adj. This Change:	Previously Approved CCO Time Adjustments:	Percentage Time Adjusted: (including this change)	Total # of Unreconciled Deferred Time CCO(s): (including this change)
475 Day(s)	**0** Day(s)	**1660** Day(s)	**349** %	**0**

THIS CHANGE ORDER PROVIDES FOR:

Additional funding for the work defined under the original Change Order No. 146.

This project was awarded in March 2004 to construct a detour that will allow for the tie in of the new east span of the San Francisco Oakland Bay Bridge to Yerba Buena Island. The detour encompasses three main structures, the East Tie-In (ETI) to the existing bridge, the West Tie-In (WTI) to Yerba Buena Island and the Viaduct structure between the two tie ins. The contract was issued as a performance based contract with the contractor responsible for providing the design of the structure based on specified design criteria.

Two separate Department strategy memorandums, dated December 14, 2006 and December 25, 2006 and both approved by Tony Anziano – Toll Bridge Program Manager, Richard land – Chief Engineer and subsequently by the Toll Bridge Program Oversight Committee (TBPOC), recommended that the Department assume the design responsibility for the ETI and WTI structures and recommended the advance construction of foundation work for the Yerba Buena Island Transition Structure (YBITS) to be added to this contract. The implementation of these strategies has led to the extension of the contract through the end of 2010 approximately 5 years past the original contract completion date.

The original Change Order No. 146 along with Supplement No. 1 provided for tree trimming of limbs that extend into the roadway that immediately services the project and any brush that may pose a potential fire hazard within the project limits. The roadway and much of the jobsite is located on a steep and heavily wooded slope which is particularly susceptible to fire risks.

The contract work has now been extended into the late fall of 2010 and it is anticipated that additional funding will be necessary to maintain the roadway and jobsite.

The work shall be compensated as extra work at force account at an estimated cost of $80,000.00 which shall be financed from the contract contingency funds. A cost analysis is on file.

No adjustment of contract time is warranted as the change will not affect the controlling operation.

Maintenance concurrence is not required as the work doesn't affect any permanent roadway features.

PE & PM have concurred to this change.

ADA Notice: For individuals with sensory disabilities, this document is available in alternate formats. For information call: (916) 654-6410 or TDD (916) 654-3880 or write Records and Forms Management, 1120 N Street, MS-89, Sacramento, CA 95814.

CONCURRED BY:		
Construction Engineer:	for Bill Casey, Resident Engineer	Date 2/11/10
Bridge Engineer:		Date
Project Engineer:	Minh B. Nguyen, PE	Date 2/11/10
Project Manager:	Alec Melkonians	Date 2/10/10
FHWA Rep.:		Date
Environmental:		Date
Other (specify):	Jeannie Balderramos	Date 2-10-10
Other (specify):		Date
District Prior Approval By:		Date
HQ (Issue Approve) By:		Date
Resident Engineer's Signature:	Deanna Vilchez for BCasey	Date 2/11/10

ESTIMATE OF COST

	THIS REQUEST	TOTAL TO DATE
ITEMS	$0.00	$0.00
FORCE ACCOUNT	$80,000.00	$180,000.00
AGREED PRICE	$0.00	$0.00
ADJUSTMENT	$0.00	$0.00
TOTAL	$80,000.00	$180,000.00

FEDERAL PARTICIPATION

☐ PARTICIPATING ☐ PARTICIPATING IN PART ☑ NONE
☐ NON-PARTICIPATING (MAINTENANCE) ☐ NON-PARTICIPATING

FEDERAL SEGREGATION (if more than one Funding Source or P.I.P. type)
☐ CCO FUNDED PER CONTRACT ☐ CCO FUNDED AS FOLLOWS

FEDERAL FUNDING SOURCE	PERCENT

ADA Notice: For individuals with sensory disabilities, this document is available in alternate formats. For information call: (916) 654-6410 or TDD (916) 654-3880 or write Records and Forms Management, 1120 N Street, MS-89, Sacramento, CA 95814.

STATE OF CALIFORNIA - DEPARTMENT OF TRANSPORTATION

CONTRACT CHANGE ORDER

Change Requested by: Engineer

CCO: 146	Suppl. No. 3	Contract No. 04 - 0120R4	Road SF-80-12.6/13.2	FED. AID LOC.:

To: **CC MYERS INC**

You are directed to make the following changes from the plans and specifications or do the following described work not included in the plans and specifications for this contract. ***NOTE: This change order is not effective until approved by the Engineer.***

Description of work to be done, estimate of quantities and prices to be paid. (Segregate between additional work at contract price, agreed price and force account.) Unless otherwise stated, rates for rental of equipment cover only such time as equipment is actually used and no allowance will be made for idle time. This last percentage shown is the net accumulated increase or decrease from the original quantity in the Engineer's Estimate.

Extra Work at Force Account:

Provide additional funds for the work specified under the original Change Order No. 146 and Change Order No. 146, Supplement Nos. 1 and 2.

Estimated cost of Extra Work at Force Account $100,000.00

Estimated Cost: **Increase** ☑ **Decrease** ☐ **$100,000.00**

By reason of this order the time of completion will be adjusted as follows: 0 days

Signature Jeannie Balderrama	**Resident Engineer** JEANNIE BALDERRAMOS	**Date** 5/19/10
Signature Deanna Vilcheck	**Area Construction Manager** DEANNA VILCHECK	**Date** 5/19/10
Signature Deanna Vilcheck	**Area Construction Manager** DEANNA VILCHECK	**Date** 5/20/10

We the undersigned contractor, have given careful consideration to the change proposed and agree, if this proposal is approved, that we will provide all equipment, furnish the materials, except as may otherwise be noted above, and perform all services necessary for the work above specified, and will accept as full payment therefor the prices shown above.

NOTE: If you, the contractor, do not sign acceptance of this order, your attention is directed to the requirements of the specifications as to proceeding with the ordered work and filing a written protest within the time therein specified.

Signature NOT REQUIRED	**(Print name and title)**	**Date**

STATE OF CALIFORNIA - DEPARTMENT OF TRANSPORTATION

CONTRACT CHANGE ORDER MEMORANDUM

TO: MIKE FORNER / DEANNA VILCHECK	FILE: **E.A.** 04 - 0120R4
	CO-RTE-PM SF-80-12.6/13.2
FROM: JEANNIE BALDERRAMOS	**FED. NO.**
CCO#: **146** SUPPLEMENT#: **3** Category Code: **CEXX**	CONTINGENCY BALANCE (incl. this change) **$35,462,309.59**
COST: **$100,000.00** INCREASE ☑ DECREASE ☐	HEADQUARTERS APPROVAL REQUIRED? ☑ YES ☐ NO
SUPPLEMENTAL FUNDS PROVIDED: **$0.00**	IS THIS REQUEST IN ACCORDANCE WITH ENVIRONMENTAL DOCUMENTS? ☑ YES ☐ NO
CCO DESCRIPTION: Tree Trimming – Additional Funding	**PROJECT DESCRIPTION:** CONSTRUCT ROUTE 80 TEMP BYPASS STRUCTURE

Original Contract Time:	Time Adj. This Change:	Previously Approved CCO Time Adjustments:	Percentage Time Adjusted: (including this change)	Total # of Unreconciled Deferred Time CCO(s): (including this change)
475 Day(s)	**0** Day(s)	**1660** Day(s)	**349** %	**0**

THIS CHANGE ORDER PROVIDES FOR:

Additional funding for the work defined under the original Change Order No. 146.

This project was awarded in March 2004 to construct a detour that will allow for the tie in of the new east span of the San Francisco Oakland Bay Bridge to Yerba Buena Island. The detour encompasses three main structures, the East Tie-In (ETI) to the existing bridge, the West Tie-In (WTI) to Yerba Buena Island and the Viaduct structure between the two tie ins. The contract was issued as a performance based contract with the contractor responsible for providing the design of the structure based on specified design criteria.

Two separate Department strategy memorandums, dated December 14, 2006 and December 25, 2006 and both approved by Tony Anziano – Toll Bridge Program Manager, Richard land – Chief Engineer and subsequently by the Toll Bridge Program Oversight Committee (TBPOC), recommended that the Department assume the design responsibility for the ETI and WTI structures and recommended the advance construction of foundation work for the Yerba Buena Island Transition Structure (YBITS) to be added to this contract. The implementation of these strategies has led to the extension of the contract through the end of 2010 approximately 5 years past the original contract completion date.

The original Change Order No. 146, along with Supplement Nos. 1 and 2, provided for tree trimming of limbs that extend into the roadway that immediately services the project and any brush that may pose a potential fire hazard within the project limits.

The contract work has now been extended into the late fall of 2010, and it is anticipated that additional funding will be necessary to maintain the roadway and jobsite.

The work shall be compensated as extra work at force account at an estimated cost of $100,000.00, which shall be financed from the contract contingency funds. A cost analysis is on file.

No adjustment of contract time is warranted, as the change will not affect the controlling operation.

This change was concurred with by Ken Terpstra - Project Manager, and Jaime Gutierrez - Project Engineer.

Maintenance concurrence is not required, as the work doesn't affect any permanent roadway features.

ADA Notice: For individuals with sensory disabilities, this document is available in alternate formats. For information call: (916) 654-6410 or TDD (916) 654-3880 or write Records and Forms Management, 1120 N Street, MS-89, Sacramento, CA 95814.

CONCURRED BY:		
Construction Engineer:	Jeannie Balderramos, RE JB	Date 5-20-10
Bridge Engineer:	Bill Casey, Bridge Engineer BJ	Date 5/19/10
Project Engineer:	Jaime Gutierrez, PE	Date 5/19/10
Project Manager:	Ken Terpstra, PM	Date 5/19/10
FHWA Rep.:		Date
Environmental:		Date
Other (specify):		Date
Other (specify):		Date
District Prior Approval By:		Date
HQ (Issue Approve) By:	Larry Salhaney, HQ CCO Engine	Date 5/20/10
Resident Engineer's Signature:	Jeannie Balderramos 5/20/10	Date

ESTIMATE OF COST

	THIS REQUEST	TOTAL TO DATE
ITEMS	$0.00	$0.00
FORCE ACCOUNT	$100,000.00	$280,000.00
AGREED PRICE	$0.00	$0.00
ADJUSTMENT	$0.00	$0.00
TOTAL	$100,000.00	$280,000.00

FEDERAL PARTICIPATION

☐ PARTICIPATING ☐ PARTICIPATING IN PART ☑ NONE
☐ NON-PARTICIPATING (MAINTENANCE) ☐ NON-PARTICIPATING

FEDERAL SEGREGATION (if more than one Funding Source or P.I.P. type)
☐ CCO FUNDED PER CONTRACT ☐ CCO FUNDED AS FOLLOWS

FEDERAL FUNDING SOURCE	PERCENT

ADA Notice: For individuals with sensory disabilities, this document is available in alternate formats. For information call: (916) 654-6410 or TDD (916) 654-3880 or write Records and Forms Management, 1120 N Street, MS-89, Sacramento, CA 95814.

CONTRACT CHANGE ORDER

Change Requested by: Engineer

CCO 148	Suppl. No. 0	Contract No. 04 - 0120R4	Road SF-80-12.6/13.2	FED. AID LOC.: ACBRIM-080-1(097)N

To: CC MYERS INC

You are directed to make the following changes from the plans and specifications or do the following described work not included in the plans and specifications for this contract. ***NOTE: This change order is not effective until approved by the Engineer.***

Description of work to be done, estimate of quantities and prices to be paid. (Segregate between additional work at contract price, agreed price and force account.) Unless otherwise stated, rates for rental of equipment cover only such time as equipment is actually used and no allowance will be made for idle time. This last percentage shown is the net accumulated increase or decrease from the original quantity in the Engineer's Estimate.

Extra Work at Force Account:

As authorized by the Engineer, design, fabricate, and construct a road tunnel canopy along Macalla Road within the United States Coast Guard facility.

A Contractor-designed canopy with specifications shall be submitted to the Department for review and approval prior to fabrication. Any deviation or changes on the design shall be submitted in writing to the Department and approved by the Engineer prior to implementation.

The design and fabrication of the canopy shall be paid for by invoice pursuant to Section 9-1.03, Force Account Payment, of the Standard Specifications.

Estimated Cost of Extra Work at Force Account $500,000.00

Estimated Cost: Increase ☑ Decrease ☐ **$500,000.00**

By reason of this order the time of completion will be adjusted as follows: 0 days

Submitted by

Signature	Resident Engineer	Date
	BILL CASEY	8-19-08

Approval Recommended by

Signature	Area Construction Manager	Date
Deanna Vilcheck	DEANNA VILCHECK	8/25/08

Engineer Approval by

Signature	Area Construction Manager	Date
Deanna Vilcheck	DEANNA VILCHECK	9/2/08

We the undersigned contractor, have given careful consideration to the change proposed and agree, if this proposal is approved, that we will provide all equipment, furnish the materials, except as may otherwise be noted above, and perform all services necessary for the work above specified, and will accept as full payment therefor the prices shown above.

NOTE: If you, the contractor, do not sign acceptance of this order, your attention is directed to the requirements of the specifications as to proceeding with the ordered work and filing a written protest within the time therein specified.

Contractor Acceptance by

Signature	(Print name and title)	Date
D E Hamick	DANIEL E. HAMICK, PRESIDENT	9/10/08

CONTRACT CHANGE ORDER

Change Requested by: Engineer

CCO 148	Suppl. No. 0	Contract No. 04 - 0120R4	Road SF-80-12.6/13.2	FED. AID LOC.: ACBRIM-080-1(097)N

To: CC MYERS INC

You are directed to make the following changes from the plans and specifications or do the following described work not included in the plans and specifications for this contract. ***NOTE: This change order is not effective until approved by the Engineer.***

Description of work to be done, estimate of quantities and prices to be paid. (Segregate between additional work at contract price, agreed price and force account.) Unless otherwise stated, rates for rental of equipment cover only such time as equipment is actually used and no allowance will be made for idle time. This last percentage shown is the net accumulated increase or decrease from the original quantity in the Engineer's Estimate.

Extra Work at Force Account:

As authorized by the Engineer, design, fabricate, and construct a road tunnel canopy along Macalla Road within the United States Coast Guard facility.

A Contractor-designed canopy with specifications shall be submitted to the Department for review and approval prior to fabrication. Any deviation or changes on the design shall be submitted in writing to the Department and approved by the Engineer prior to implementation.

The design and fabrication of the canopy shall be paid for by invoice pursuant to Section 9-1.03, Force Account Payment, of the Standard Specifications.

Estimated Cost of Extra Work at Force Account $500,000.00

Estimated Cost: Increase ☑ Decrease ☐ **$500,000.00**

By reason of this order the time of completion will be adjusted as follows: 0 days

Submitted by

Signature	Resident Engineer	Date
	BILL CASEY	8-19-08

Approval Recommended by

Signature	Area Construction Manager	Date
Deanna Vilcheck	DEANNA VILCHECK	8/25/08

Engineer Approval by

Signature	Area Construction Manager	Date
Deanna Vilcheck	DEANNA VILCHECK	9/2/08

We the undersigned contractor, have given careful consideration to the change proposed and agree, if this proposal is approved, that we will provide all equipment, furnish the materials, except as may otherwise be noted above, and perform all services necessary for the work above specified, and will accept as full payment therefor the prices shown above.

NOTE: If you, the contractor, do not sign acceptance of this order, your attention is directed to the requirements of the specifications as to proceeding with the ordered work and filing a written protest within the time therein specified.

Contractor Acceptance by

Signature	(Print name and title)	Date
D E Hamick	DANIEL E. HAMICK, PRESIDENT	9/10/08

CONTRACT CHANGE ORDER

Change Requested by: Engineer

CCO 149	Suppl. No. 0	Contract No. 04 - 0120R4	Road SF-80-12.6/13.2	FED. AID LOC.: ACBRIM-080-1(097)N

To: CC MYERS INC

You are directed to make the following changes from the plans and specifications or do the following described work not included in the plans and specifications for this contract. ***NOTE: This change order is not effective until approved by the Engineer.***

Description of work to be done, estimate of quantities and prices to be paid. (Segregate between additional work at contract price, agreed price and force account.) Unless otherwise stated, rates for rental of equipment cover only such time as equipment is actually used and no allowance will be made for idle time. This last percentage shown is the net accumulated increase or decrease from the original quantity in the Engineer's Estimate.

Extra Work at Force Account:

Perform the following work pertaining to furnishing the lead core and pot bearings for the East Tie-In structure in accordance with the plans and specifications shown on Sheets No. 2 through 55 of this change order and as determined by the Engineer:

1) Furnish 2 EA Type 1 lead rubber bearings for Pier E1, including all masonry plates, mounting plates, sole plates, stopper rings and appurtenances.

2) Furnish 1 EA Type 1 lead rubber bearings for prototype testing, including all appurtenances.

3) Furnish 2 EA pot bearing assemblies for Bent 52A, including all bearing plates, mounting plates, masonry plates, stoppers and appurtenances.

4) Furnish 2 EA pot bearing assemblies for Pier E1, including all bearing plates, restrainer plates, masonry plates and appurtenances.

5) Furnish mock up masonry plates.

6) Perform all bearing prototype and proof testing.

Estimated Cost of Extra Work at Force Account $1,600,000.00

Estimated Cost: Increase ☑ Decrease ☐ **$1,600,000.00**

By reason of this order the time of completion will be adjusted as follows: Deferred

Submitted by

Signature	Resident Engineer BILL CASEY	Date 10-27-08

Approval Recommended by:

Signature	SFOBB Construction Manager PETER SIEGENTHALER	Date 10/28/08

Engineer Approval by:

Signature	SFOBB Construction Manager PETER SIEGENTHALER	Date 11/24/08

We the undersigned contractor, have given careful consideration to the change proposed and agree, if this proposal is approved, that we will provide all equipment, furnish the materials, except as may otherwise be noted above, and perform all services necessary for the work above specified, and will accept as full payment therefor the prices shown above.

NOTE: If you, the contractor, do not sign acceptance of this order, your attention is directed to the requirements of the specifications as to proceeding with the ordered work and filing a written protest within the time therein specified.

Contractor Acceptance by

Signature	(Print name and title) DANIEL E. HANNEY, PRESIDENT	Date 11/19/08

SFOBB TEMPORARY BYPASS STRUCTURE

EAST TIE-IN SEGMENT
ROLL – OUT ROLL – IN

100% SUPERSTRUCTURE SPECIFICATIONS (POT AND LEAD RUBBER BEARINGS ONLY)

BRIDGE NO. 34-0006 (TEMP)

Location: 04-SF-80-12.6/13.2
EA No.: 0120R4

Project Title: South/South Detour – San Francisco-Oakland Bay Bridge
Project No.: 1295

Volume 1 of 1

August 22, 2008

CONTRACT NO. 04-0120R4

CONTRACT CHANGE ORDER NO 149

SHEET 2 OF 55

CONTRACT NO. 04-0120R4

The special provisions contained herein have been prepared by or under the direction of the following Registered Persons.

STRUCTURES

REGISTERED CIVIL ENGINEER

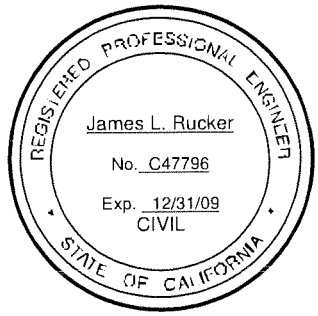

CONTRACT NO. 04-0120R4

CONTRACT CHANGE ORDER NO 149

SHEET 3 OF 55

TABLE OF CONTENTS

TABLE OF CONTENTS 3
10.1.__ POT BEARINGS 4
BEARING SUPPLIERS 4
GENERAL 4
DOCUMENTATION 4
WORKING DRAWINGS 5
QUALITY CONTROL PROGRAM 6
MATERIALS 6
DESIGN 9
MOCK-UPS 11
INSTALLATION MANUAL 13
FABRICATION REQUIREMENTS 14
PAINTING OR METALIZING 16
MARKING, IDENTIFICATION AND STORAGE. 17
INSPECTION AND MAINTENANCE MANUAL 17
TESTING 17
Prototype Testing Procedures 18
Proof Testing Procedures 19
Acceptance Criteria 19
SHIPPING AND HANDLING 20
INSTALLATION 20
SUBMISSIONS AND SCHEDULING 22
MEASUREMENT AND PAYMENT 24
10.1.__ LEAD RUBBER BEARINGS 25
BEARING SUPPLIERS 25
GENERAL 25
DOCUMENTATION 26
WORKING DRAWINGS 26
QUALITY CONTROL PROGRAM 27
MATERIALS 27
DESIGN 29
GROUTING MOCK-UP 30
INSTALLATION MANUAL 31
FABRICATION 32
MARKING, IDENTIFICATION AND STORAGE 32
INSPECTION AND MAINTENANCE MANUAL 32
TESTING 33
Proof Testing Acceptance Criteria 36
SHIPPING AND HANDLING 37
INSTALLATION 37
SUBMISSIONS AND SCHEDULING 39
MEASUREMENT AND PAYMENT 41

CONTRACT NO. 04-012089

CONTRACT CHANGE ORDER NO 149

SHEET 4 OF 55

10.1.__ POT BEARINGS

Pot bearings shall consist of an elastomeric disk within a steel pot, mounting plates, anchorage components, bedding materials, a PTFE/stainless steel sliding system for expansion bearings, and all other necessary components and shall be designed, fabricated, and installed in conformance with the details shown on the plans and as specified in the Standard Specifications and these special provisions.

BEARING SUPPLIERS

All pot bearings used in the work shall be from the same manufacturer. The proposed pot bearing supplier shall be selected from the following list:

BEARING SYSTEM	MANUFACTURER ADDRESS AND PHONE NUMBER
Pot Bearing	CON-SERV INC., 685 AVIATION BLVD, GEORGETOWN, SC 29440. 1-800-541-1044 D.S. BROWN, 300 EAST CHERRY STREET, NORTH BALTIMORE, OH 45872 1-419-257-3561 MAGEBA SA TEL +41-44-872 40 50 FAX +41-44-872 40 59 EMAIL INFO@MAGEBA.CH VSL INC 7455-T NEW RIDGE ROAD HANOVER, MD 21076 1-410-850-4111

GENERAL

The pot bearings shall be designed, fabricated, prototype-tested, proof-tested and installed as shown on the plans and the approved working drawings, and as specified in these special provisions. The manufacturer shall demonstrate a minimum of 5 years experience in the design and manufacture of pot style bearings and be certified under the AISC Quality Certification Program - Simple Steel Bridges. Bearings shall be fabricated at facilities owned and operated by the manufacturer; the manufacturer being the entity that designs, fabricates, and supervises the installation of the bearing assemblies.

Attention is directed to the as-built plans for Bridge No. 33-0025 and "Project Information" of these special provisions regarding location of existing anchorage steel in Pier E1.

DOCUMENTATION

The Contractor shall provide at least the following documents:

CONTRACT NO. 03-012004

CONTRACT CHANGE ORDER NO 149

SHEET 5 OF 55

A. Working drawings
B. Supplemental calculations
C. Quality control program
D. Test reports
E. Installation manual
F. Inspection and maintenance manual

Each working document, including each sheet of the calculations, shall be signed by an Engineer who is registered as a Civil Engineer in the State of California.

WORKING DRAWINGS

Working drawings and supplemental calculations for pot bearings shall conform to the requirements in "Working Drawings" of these special provisions.

Attention is directed to subsections "Testing," and "Mock-Up," of this section. After testing and mock-up, the Contractor shall revise and resubmit the working drawings for the Engineer's approval. Approval of working drawings will be contingent on Engineer's approval of prototype testing and mock-ups. The Contractor shall revise and resubmit to the Engineer for approval working drawings affected by changes required for successful completion of prototype testing and mock-ups, unless otherwise approved by the Engineer.

Working drawings shall include all components and assemblies, shall show both general arrangements and large-scale details, and shall include tables showing load capacity and movement rating, if applicable, of each bearing, including any initial offset required.

The working drawings shall contain all information required for the proper fabrication and installation of the bearings, including, but not limited to, the following:

A. Complete details of the bearing system, including material properties and dimensions of all bearing components.
B. Evaluation and confirmation that adequate space is available for coring and installation equipment.
C. Details of connecting plates, grout pads, anchor bolts, nuts, protective skirt, pintles, and any required revisions or additions to new and existing structural steel, concrete reinforcement or other components of the structure necessary to accommodate the bearings proposed for use.
D. Welding and inspection procedures .
E. Details of adapter plates needed for testing.
F. Details of temporary restraint assembly device
G. Details of temporary clamping device.
H. Surfaces to be painted or metalized.
I. Grout mix design(s).
J. Construction schedule for pot bearing installation.

CONTRACT NO. 04-0120R4
CONTRACT CHANGE ORDER NO 149
SHEET 6 OF 55

K. Information on the initial vertical displacement and long-term vertical displacement under anticipated service loading.

Supplemental Calculations

The Contractor shall submit design calculations that supplement the working drawings and show conformance of the bearings to the design loadings, movements and other specified requirements. Calculations shall be prepared by an engineer who is registered as a Civil Engineer in the State of California.

QUALITY CONTROL PROGRAM

The Contractor shall submit to the Engineer fabrication quality control program procedures that address at a minimum the following:

A. Incoming materials and storage
B. Machining tolerances and finishes
C. Welding procedures
D. Elastomer compound mixing
E. Vulcanization
F. Materials testing procedures
G. Marking and identification
H. Shipping and handling
I. Documentation

The Contractor shall submit 6 copies of the Quality Control Program for review and approval in accordance with the schedule described in sub-section "Submissions and Scheduling" of this section.

MATERIALS

Steel elements of pot bearings shall conform to "Steel Structures" of these special provisions. Attention is directed to "Welding" and "Audits" of these special provisions. Welding of pot bearings shall conform to AWS D1.5.

Steel Plate shall be ASTM A36, A572 or A709/709M grade 50.

Stainless steel surfacing shall conform to the following:

A. Stainless steel sheet (min 3 mm thick) ASTM A167, Type 304 or ASTM A240, Type 304 with a finish equal to or better than 0.2 micro-meters rms.
B. Solid stainless steel ASTM A240, Type 304 or 304L with a finish equal to or better than a 0.2 micro-meters rms.
C. Stainless steel weld overlay, a minimum of 2.4 mm thick after surfacing, with a finish equal or less than 0.2 micro-meters rms.

Brass for Sealing Rings shall conform to the requirements in ASTM Designation: B 36, half-hard alloy 260.

Polytetrafluoroethylene (PTFE) shall be manufactured from pure virgin unfilled TFE resin conforming to ASTM Designation: D 1457. Reprocessed material will not be permitted. PTFE shall be resistant to acids, alkalis and petroleum products; non-

CONTRACT NO. 64-0120R4
CONTRACT CHANGE ORDER NO 149
SHEET 7 OF 55

absorbing of water; stable from -217.8°C to +260°C; non-flammable; and meet the following test requirements:

Physical Property	ASTM Test Method	Requirement, minimum
Ultimate tensile strength	D 1457	19.3 MPa
Ultimate elongation	D 1457	200%
Specific Gravity	D 792	2.12

Adhesive shall conform to the following:

A. Adhesive used for bonding sheet PTFE shall be an epoxy material stable from -17.8°C to +121.1°C and recommended for the purpose by the manufacturer of the PTFE.

Pot bearing elastomer shall be 100% virgin polychloroprene (Chloroprene Rubber or CR) or 100% virgin polyisoprene (Natural Rubber or NR) and shall satisfy the requirements for Temperature Grade 2 rubber. The elastomer shall be plain, not laminated or fiber reinforced, and shall meet the following test requirements:

Physical Property	ASTM Test Method	Requirement (CR)	Requirement (NR)
Hardness, Shore A Durometer	D 2240	50±5	50±5
Tensile strength, min. MPa	D 412	17	17
Ultimate elongation, min.	D 412	400%	450
Aged properties after 70 hours	D 573		
Temperature		100°C	70°C
Hardness change, max.		+ 15	+10
Tensile strength change, max.		- 15%	-25%
Ultimate elongation change, max.		- 40%	-25%
Compression set after 22 hours	D395 (Method B)		
Temperature		100°C	70°C
Compression set, max.		35%	25%

Pot bearing elastomeric disk shall be lubricated with a silicone grease conforming to MIL-S-8660, or an equal that has been approved in writing by the Engineer.

Paint shall conform to the requirements in "Clean and Paint Structural Steel" of these special provisions

CONTRACT NO. 04-012024

CONTRACT CHANGE ORDER NO 149

SHEET 8 OF 55

Grout used for installing the fixed pot bearings at Bent 52A and for the expansion pot bearings at Pier E1 shall satisfy the following requirements:

Location	Bent 52A	Pier E1	
Bearing	Fixed pot	Expansion pot	
Application	Bedding	Bedding	Pintle holes
REQUIREMENT			
To be proposed by the Contractor, and subject to the approval of the Engineer.	X	X	X
To be suitable for exterior use.	X	X	X
To have zero drying/curing shrinkage in conformance with ASTMC827.	X	X	X
To have proven history in similar applications.	X	X	X
To be suitable for the bedding thickness used	X	X	X
To pre-packaged, non-metallic, cementitious material containing no chlorides.	X		
To contain fine aggregate.	X		
To be suitable for installation by injection at very low pressure (20 kPa) or by pouring.	X		
To have a minimum working time of 45 min. in the thickness and temperature to be used.		X	X
To be a 3-component, 100% solids, solvent-free epoxy grout containing fine aggregate.		X	X
To develop sufficiently little heat that it does not set up prematurely when used in the required volume.			X
To exhibit low creep (< 0.0025 mm/mm)		X	

Grout strength shall be measured by cube strength in compression, in accordance with ASTM C109, and shall satisfy the following:

A. At fixed pot bearings at Bent 52A:
1. 30 MPa at time of loading with the new ETI truss.
2. 40 MPa at 28 days.

B. At expansion pot bearings at Pier E1 - Bedding material:
1. 20 MPa at time of loading with the new ETI truss (approximately 6 hours maximum).
2. 40 MPa at 28 days.

At expansion pot bearings at Pier E1 - Pintle hole material:
40 MPa at 28 days.

CONTRACT NO. 04-0120R4
CONTRACT CHANGE ORDER NO 149
SHEET 9 OF 55

The same material may be used for the fixed pot bearings at Bent 52A and the lead–rubber bearings at Pier E1, provided that it satisfies the requirements for both applications. In place of the specified cementitious grout, the Contractor may propose alternative materials, including epoxy grouts, for approval by the Engineer, provided that they have strength at least equal to the value specified for the application and that they satisfy all other relevant requirements given in the table above.

The same material may be used for bedding the masonry plates and filling the pintle holes at the expansion pot bearings at Pier E1, provided that it satisfies the requirements for both applications. It is suggested that Five Star HP epoxy grout, or similar material, be investigated for this application. If different grouts are used for filling pintle holes and bedding, they shall be compatible with each other.

Ultra High Molecular Weight Polyethylene (UHMWPE) shall be manufactured with a maximum 50 percent regenerated or recycled material; and with a molecular weight of 3,000,000 to 6,000,000 in accordance with the requirements in ASTM D4020, compression molded, stress relieved, and include an ultraviolet stabilizer. The UHMWPE shall be approved by the Engineer. Physical characteristics shall conform to the following requirements:

A. Static coefficient of friction to steel shall be less than 0.10.
B. Specific gravity shall be greater than 0.92 (ASTM D 792)
C. No water absorption shall be shown under long term immersion (ASTM D 510)
D. The minimum tensile stress capacity shall be 25 MPa and the minimum impact shear capacity shall be 10 MPa.

DESIGN

The manufacturer shall design the bearings for the loads and movements and performance criteria shown on the plans. The bearings shall also satisfy the design requirementsof the AASHTO LRFD Specifications, Third Edition (2004).

Bearings shall be supplied with temporary clamping devices that will safely hold the assembled bearing during storage, shipping, and when it is transported hanging from the truss.

Bearings shall be designed to have a static friction coefficient not greater than 0.10 and kinetic friction coefficient not greater than 0.07.

Compatibility with Engineer's Plans

The bearings shall be compatible with the dimensional clearances and tolerances shown on the plans. The Contractor shall verify all dimensions required for installation of the bearings.

The Contractor shall check the mounting plates and bolts based on the bearing system proposed for use and redesign the mounting plate and bolts, if necessary. The anchorage strength of the mounting plate and bolt system shall not be less than the strength of the system shown on the plans. The total height of the bearing system shown on the plans shall not be modified without the approval of the Engineer. Any re-design of the anchorage system or the bearing connection details shall be subject to the approval of the Engineer.

CONTRACT NO. 04-012024
CONTRACT CHANGE ORDER NO 149
SHEET 10 OF 55

The bearings shall be capable of operating as specified for an ambient air temperature range of +0°C to +40°C. Bearing design criteria shall include a minimum rotation of 0.02 radians, which includes rotations due to all applicable service loads and movements, maximum rotations caused by fabrication and installation tolerances, and allowance for uncertainty. Designs shall be based on the assumption that maximum vertical and horizontal loads and rotations occur simultaneously. The design of the bearings shall meet the following requirements:

A. **Steel Bearing Components**

1. **Pot.** The inside diameter of the pot cavity shall be nominally equal to the diameter of the elastomeric pad. The pot shall be deep enough to permit the seal and piston rim to remain in full contact with the vertical face of the pot wall under all design loads, movements, and rotations. The pot walls shall be designed to withstand both the internal pressures caused by the vertical loads (considering the elastomer to behave as a fluid) and the design lateral loads. The thickness of the pot wall shall not be less than 0.05 times the pot internal diameter.

2. **Piston.** The piston thickness shall be sufficient to provide at least 3 mm vertical clearance between rotating and non-rotating components of the bearing at maximum compressive load and rotation. The radial clearance between the piston and the pot wall shall be sufficient to prevent binding at maximum rotation. For bearings carrying horizontal loads, the piston face width shall be designed assuming a contact area with the pot wall of one-third the pot circumference and allowable compressive stress not exceeding $0.8 \times F_y$. These limits shall apply to the as-built, rather than the nominal, dimensions.

B. **Sole and Masonry Plates.** The sole and masonry plates shall be designed to distribute the bearing loads into the surrounding substructure and/or superstructure and shall satisfy the geometric constraints shown on the plans. The allowable bending stress in sole and masonry plates shall be $0.63 \times F_y$, and the thickness shall not be less than 20 mm. Service or installation considerations, such as weldability and bearing height, may require thicker masonry and sole plates than needed for strength considerations alone.

C. **PTFE Sheets.** PTFE sheets shall be a minimum of 3 mm thick.

D. **Elastomeric Disk for Pot Bearings.** The area of the disk shall be selected to limit the average bearing pressure on the disk to 24 MPa under the design loads.

E. **Brass Sealing Rings for Pot Bearings**. The sealing system shall be designed to prevent leakage of elastomer past the seal under maximum compressive load and cyclic rotations. Sealing rings shall be flat brass, not less than 9.5 mm wide and

CONTRACT NO. 04-012084
CONTRACT CHANGE ORDER NO 149
SHEET 11 OF 55

2.3 mm deep. A minimum of 3 rings shall be used. Alternative sealing ring systems may be used with the written approval of the Engineer.

F. **Protective Skirt.** The manufacturer shall provide a protective skirt for each expansion pot bearing at Pier E1. The protective skirt shall protect the stainless steel surface from dust, water, and other foreign materials. The protective skirt shall not restrict movement or rotation of the bearing and shall have an expected life cycle equal to that of the bearing.

MOCK-UPS

The Contractor shall prepare mock-ups that demonstrate the suitability of the proposed materials and construction sequences. Mock-ups shall conform to the manufacturer's recommendations and these special provisions.

The mock-ups shall not be part of the permanent structure and shall become the property of the Contractor. The mock-ups shall be removed from the work site and shall be disposed of in conformance with the provisions in Section 7-1.13, "Disposal of Material Outside the Highway Right of Way," of the Standard Specifications.

Grouting Mock-up (Fixed pot bearing at Bent 52A)

The proposed grout material and installation procedure shall be tested in a mock-up of a masonry plate. The purpose of the grouting mock-up is to verify the installation methods proposed and the suitability of the materials for the installation methods needed, and to demonstrate that the necessary work can be accomplished by the Contractor within the working time of the bedding and/or grouting materials. The Contractor's ability to completely fill the bedding space under the large masonry plate is of particular importance.

The grouting mock-up shall conform to the following:

A. A steel masonry plate shall be used with dimensions at least 1740 mm x 1740 mm in plan x 38 mm thick, with leveling screws. Inclusion of anchor bolts in the mockup is not necessary.
B. The thickness of bedding material shall be 25 mm.
C. The underside of the steel plate shall be covered with a bond breaker to ensure removal of the plate from the bedding material.
D. The mockup masonry plate shall be grouted with at least 15 minutes remaining before the bedding material becomes unworkable.
E. When the bedding material has reached a strength of 20 MPa, the mockup shall be disassembled and the adequacy of the installation procedure shall be verified. The grout shall be free from cracking and exhibit zero shrinkage in situ. The area of any air voids in the grout shall be less than 20% of the area of the plate. Depth of air pockets shall not exceed 4 mm.

If in the opinion of the Engineer acceptable installation results are not achieved, the process and/or the grouting material shall be modified and the mock-up repeated until successful results are achieved.

CONTRACT NO. 04-0120Q4
CONTRACT CHANGE ORDER NO 149
SHEET 12 OF 55

Pintle Grout and Bedding Grout Installation Mock-up (Expansion pot bearings at Pier E1)

The grouting materials proposed shall be tested in a mock-up of a masonry plate with pintles in holes, of the sizes shown on the plans. The purpose of the grouting mock-up is to verify the installation methods proposed, suitability of the materials to the installation methods needed, and demonstrate that the necessary work can be accomplished by the Contractor within the working time of the bedding and grouting materials. In particular, the installation procedures developed shall ensure that no air is trapped in the grout in the pintle holes or within the pintle pipes.

The pintle grout material, once cured, shall be free from cracking and exhibit zero shrinkage in situ. Verification shall be provided that the mass of grout in the pintle hole does not cause premature setting of the material due to heat generation.

The grouting mock-up shall include the following:

A. A steel masonry plate at least 1670 mm x 1670 m x 38 mm min. with leveling screws, locating lugs, and four pintles. This plate shall be set onto a concrete base containing four pintle holes using the hole diameter and pintle pipe size shown on the plans.
B. The pintles shall be attached to the steel plate in such a way that they can be disconnected and the plate can be lifted after the bedding material has set.
C. The thickness of bedding material shall be the minimum shown on the plans.
D. The underside of the steel plate shall be covered with a bond breaker to ensure removal of the plate from the bedding material.
E. The mockup masonry plate shall be set and leveled with at least 15 minutes remaining before the bedding material becomes unworkable.
F. When the grout has reached a strength of 20 MPa, the mockup shall be disassembled and the adequacy of the installation procedure shall be verified. The area of any air voids in the bedding material grout shall be less than 20% of the area of the plate. Depth of air pockets shall not exceed 4 mm.
G. If in the opinion of the Engineer acceptable installation results are not achieved, the process and/or the grouting material shall be modified and the mock-up repeated until successful results are achieved.

Pintle Grout and Bedding Grout Material Mockup (Pintle holes at Pier E1)

The behavior of the pintle hole grout shall be proven in a separate mockup test. The elements to be tested are: the exothermic behavior of the grout material in the pintle holes and the shrinkage behavior after curing

The mockup shall consist of the following:

A. A tube of the diameter and length of the pintle holes as shown on the plans.
B. A pipe of the size of the pintle pipes as shown on the plans with a removable closed top and air vent holes as are to be used on actual pintles.
C. The proposed pintle hole grout.

CONTRACT NO. 04-0120R4
CONTRACT CHANGE ORDER NO 149
SHEET 13 OF 55

The mockup shall be conducted as follows:

A. Grout shall be mixed in accordance with the manufacturer's instructions and then placed in the tube.
B. The pintle pipe shall be inserted fully into the grout.
C. The set time (point at which it becomes impossible to insert the pintle into the grout) shall be determined by means to be proposed by the Contractor.
D. After the grout has set, the removable top of the pintle pipe shall be removed and the adequacy of filling determined.
E. The whole assembly shall then be cut apart at mid height and examined for evidence of shrinkage.

If in the opinion of the Engineer acceptable results are not achieved, the process and/or the grouting material shall be modified and the mock-up repeated until successful results are achieved.

INSTALLATION MANUAL

The Contractor shall prepare a pot bearing installation manual. The Contractor shall submit 6 copies of the installation manual for the bearings for review and approval by the Engineer. Final copies of the installation manual, revised to address review comments, if any, by the Engineer, shall be provided in accordance with these special provisions. The schedule for submission shall conform to the requirements of sub-section "Submissions ands Scheduling" of this Section. Attention is directed to "Construction Surveying" of these special provisions. Schedule and durations identified in the installation manual shall conform to the schedule required in "Move Bridge" of these special provisions.

Installation sequence shown on the plans is for reference only. The Contractor shall be responsible for developing the installation sequence to be used.

The installation manual shall include, but not be limited to, the following:

A. Step-by-step procedures describing all aspects of bearing installation, including removal of unsound concrete, coring, installation sequence and setting diagrams, durations, materials and procedures for leveling, aligning and attaching the bearing system to the substructure and superstructure. The procedures for grouting and bedding of the masonry plates shall use the methods developed in the grouting and bedding mock-ups.
B. Requirements for storage of the bearings and details of temporary protection and support of the bearings during shipping, handling and installation.
C. Temporary clamping device details, installation, and removal. Temporary clamping device shall prevent separation of bearing components during transport and installation. The Contractor shall verify that adequate space is available for removal of temporary clamping device after installation is complete.
D. Grout installation methods for Bent 52A bedding material, Pier E1 pintle holes, and Pier E1 bedding material. The Contractor shall propose methods to allow air to escape as the masonry plate is lowered onto bedding material and into pintle

CONTRACT NO. 64-0120R4
CONTRACT CHANGE ORDER NO 149
SHEET 14 OF 55

holes so that complete filling, without air voids, of the space within the pintle pipes and under the masonry plate is achieved.

E. Methods for correcting mis-matches in elevation and level of the bearings. The Contractor shall propose methods for correcting the angle between the uppermost surface of the bearing and the masonry plate, and the level of the bearing plate of the truss, in the event that those dimensions should lie outside the permitted range.

FABRICATION REQUIREMENTS

Flatness and Tolerances

Flatness of bearings after fabrication shall be determined by the following method:

A. A precision straight edge that is longer than the nominal dimension to be measured shall be placed in contact with the surface to be measured.
B. A feeler gauge shall be selected with a thickness corresponding to the flatness tolerances in Item D below. An attempt shall be made to insert it under the straightedge.
C. Flatness is acceptable if the feeler does not pass under the straightedge.
D. Flatness tolerances are arranged in the following classes:

1. Class A: 0.001 x Nominal Dimension
2. Class B: 0.002 x Nominal Dimension
3. Class C: 0.005 x Nominal Dimension

E. Nominal Dimension is defined as the actual dimension of the plate under the straightedge.

Bearing Components

Bearing components shall conform to the following tolerances:

A. Overall bearing height shall not vary from nominal dimension by +3 mm, -0.0 mm.
B. The inside diameter of pots shall be machined to a tolerance of ±0.15 mm. The tolerance on the depth of the pot cavity shall be +0.635 mm, -0 mm. The tolerance on the thickness of the pot base shall be +0.635 mm, -0 mm.
C. The outside of the pot base shall be machined parallel to the inside to a Class "A" tolerance.
D. Elastomeric disk tolerances shall be:
   1. Diameter, -1.5 mm, + 0.0 mm
   2. Thickness, -0 mm, +3 mm
E. Piston tolerances shall be:
   1. Diameter, ± 0.15 mm
   2. Thickness +0.635 mm, - 0 mm
   3. Sliding side, Class "A" tolerance; elastomer side, Class "C" tolerance.
   4. Depth of PTFE recess, 0.1 mm. Diameter of PTFE recess, 0.5 mm.

CONTRACT NO. 64-D1201R4
CONTRACT CHANGE ORDER NO 149
SHEET 15 OF 55

5. Piston flanges (if any): thickness +0.635 mm, -0 mm; diameter +3 mm, -0.8 mm.

Mounting Plates

Mounting plates, including masonry and sole plates and shims, and plates used in the temporary lateral restraining system, shall conform to the following tolerances:

A. Masonry and sole plate tolerances shall be:

1. Dimensions:
   a. Plan dimensions, ±6 mm.
   b. Thickness, ±1.6 mm
2. Flatness:
   a. Face in contact with bearing components, Class A; Opposite face, Class C.

Structural Steel Components

Structural steel elements shall conform to the following fabrication requirements:

A. The pot shall be machined from a single piece of steel.
B. The piston shall be machined from a single piece of steel.

Finish of structural steel components shall conform to the following:

A. All specified machined surface finish tolerances shall be verified using a calibrated profilometer provided by the Contractor and approved by the Engineer.
B. All steel surfaces in contact with elastomer, PTFE, or other steel surfaces, shall be finished to a smoothness of 5 micro-meters (rms) or less.
C. The inside of the pot wall shall be finished to a smoothness of 2.5 micro-meters (rms) or less.
D. No coatings other than silicone grease shall be applied to the surfaces of the pot or piston that are in contact with the elastomer and sealing system.
E. Surfaces within the grip of high strength bolted connections shall be cleaned and painted before assembly in accordance with the requirements for bolted connections in "Steel Structures," of these special provisions.

Elastomeric Disk

Fabrication of elastomeric disk shall conform to the following:

A. Each elastomeric disk shall be individually molded in one piece. No layering or stacking of disks will be permitted.
B. Cuts, gouges or nicks from machine cutting or flash trimming will because for rejection.
C. If brass sealing rings are used, the groove in the elastomeric disk for the sealing system shall be integrally molded. It shall not be cut after molding. It shall be square to the pad top surface and have the same nominal dimensions as the brass sealing rings.

CONTRACT NO. 04-012024
CONTRACT CHANGE ORDER NO 149
SHEET 16 OF 55

Sealing Ring

Fabrication of sealing rings shall conform to the following:

A. If brass sealing rings are used, they shall be finished to a smoothness of 1.6 μm(rms) or less.
B. The gap between the ring and the wall shall not exceed 0.25 mm.
C. Each ring shall have one vertical cut at 45° to the tangent with a maximum gap of 1.5 mm. The gaps shall be staggered a minimum of 90° relative to one another when the rings are in place.

PTFE Sliding Sheet

Fabrication of PTFE sliding sheet shall conform to the following:

A. PTFE sheet shall be bonded into a square-edged recess in the piston. The depth of the recess shall be equal to one-half the PTFE sheet thickness, and its shoulders shall be sharp and square.
B. The sheet shall be etched by the sodium naphthalene or sodium ammonia etching process and then epoxy-bonded into the recess. After completion of the bonding operation the PTFE surfaces shall be smooth and free from blisters or bubbles.

Stainless Steel Sheet

Fabrication of stainless steel sheet shall conform to the following:

A. Stainless steel sheet shall be attached to backing plates by continuous fillet welding along the edges, including edges of holes for bolts and other purposes. Bonding and/or mechanical fastening of sheets will not be permitted. The weld shall form a complete seal against ingress of moisture and other contaminants.
B. Welding shall be in accordance with AWS D1.5.
C. The backing plates shall extend beyond the edge of the stainless steel sheet to accommodate the welds and the welds shall not protrude above the stainless steel sheet. At any hole, the weld around the edge shall be recessed by grinding or machining so that the PTFE will not be damaged by sliding over the edge.
D. Stainless steel sheet shall remain in contact with base metal throughout their service life such that interface corrosion cannot occur.

PAINTING OR METALIZING

Metal surfaces of bearings exposed to the atmosphere and in contact with the structure of the completed work, except stainless steel surfaces, shall be cleaned and painted in conformance with "Clean and Paint Structural Steel" of these special provisions or zinc metalized in accordance with AWS C2.18-93. Galvanizing will not be permitted. The surfaces to be painted or metalized shall be shown in the working drawings. The pot cavity and all surfaces covered by stainless steel or PTFE sheet shall not be painted or metalized.

CONTRACT NO. 04-012024
CONTRACT CHANGE ORDER NO 149
SHEET 17 OF 55

MARKING, IDENTIFICATION AND STORAGE.

A. **Identification.** Each bearing shall be permanently marked with the manufacturer's name, date of fabrication, contract number, lot number, bearing type or model number, bearing identification number, and the installed location. The marking shall be on a surface visible after installation in the bridge.

B. **Storage.** All bearings, whether in the fabrication shop or an independent warehouse, shall be stored in a clean, dry, covered facility. When in storage, the bearings shall be kept banded, wrapped, and secured in a condition suitable for shipment.

INSPECTION AND MAINTENANCE MANUAL

The Contractor shall prepare an inspection and maintenance manual for the pot bearings, and shall submit 6 copies of the draft for review and approval by the Engineer in accordance with the schedule specified in "Submissions and Scheduling" of these special provisions. The inspection and maintenance manual shall include, but not be limited to, the following:

A. Inspection requirements for the pot bearings, including the recommended frequency of inspection. The manual shall include the specific observations to be made, and the acceptable range of values.
B. Maintenance requirements for the bearings, including the recommended frequency of maintenance.
C. Contact and telephone number for maintenance questions.

TESTING

General

Full sized fixed potbearings shall be proof tested, and full sized expansion pot bearings shall be prototype tested and proof tested, to verify compliance with the requirements shown on the plans. All testing shall be performed in the presence of the Engineer.

Prototype testing may be performed by the Contractor at the SRMD Test Facility at the University of California, San Diego, or other suitable location as approved by the Engineer. Proof testing may be performed either at the SRMD Test Facility or at the manufacturer's plant. If tests can not be performed at the specified load, the Contractor shall submit to the Engineer for review and approval an alternative testing plan. These alternative tests shall demonstrate that all the requirements for testing at the specified load are satisfied.

The manufacturer shall coordinate with the test facility for the design and manufacturing of the adapter plates to be used to attach the bearings to the test apparatus. After testing, all adapter plates will become the property of the State.

The Contractor shall coordinate with the test facility to schedule the testing. As a minimum:

CONTRACT NO. 64-0120R4
CONTRACT CHANGE ORDER NO 149
SHEET 18 OF 55

A. The Contractor shall notify in writing the test facility and the Engineer at least eight weeks prior to the shipping of bearings to be tested.
B. For prototype testing, the Contractor shall allow four weeks for the test facility to perform the prototype tests on each type of pot bearing.
C. For proof testing, the Contractor shall allow one week for the test facility to perform the proof tests on each pot bearing.

Pot bearings for prototype and proof testing shall be marked in accordance with the requirements in these Special Provisions for marking and identification of production bearings. Prior to testing, the accessible bearing surfaces shall be cleaned and the test specimens shall be conditioned for 12 hours at 21°±8°C {70±15°F}. Unless otherwise determined by the Engineer, all testing shall follow the numerical sequences listed.

Pot bearings that have been prototype tested, have met all the acceptance criteria, and have experienced no damage, may be installed in the bridge, provided that they are equipped with a new elastomeric pad, new seals and new PTFE.

Prototype Testing Procedures

A complete series of prototype tests shall be performed on at least one full-sized specimen for each expansion pot bearing size and type designated on the plans.

For all prototype tests and for each cycle of test, the time, axial load, axial displacement, shear force and shear displacement of the prototype specimen(s) shall be continuously recorded.

Prototype testing of pot bearings shall conform to the following requirements:

A. Prototype testing shall be performed on expansion pot bearings.
B. The prototype tests required shall be as follows:
   1. A test for compression.
   2. A test for compression and coefficient of friction.

C. Test for compression: The bearing shall be tested by holding it at the design rotation or 0.02 radians, whichever is greater, for one hour at 1.5 times the maximum vertical load shown on the plans for the bearing.

D. Tests for coefficient of friction: The tests shall be performed at the minimum vertical load shown on the plans for the bearing, at a rotation of 1%. Prior to testing, the bearing shall be held at the test rotation at the test load continuously for 6 hours. The following conditions shall apply:

   1. All prototype friction tests shall be performed using continuous sawtooth displacement (constant velocity) input at a rate of loading to be approved by the Engineer.
   2. The tests shall be arranged to allow measurement of the "breakaway" coefficient of friction on the first movement of the bearing.

CONTRACT NO. 04-012024
CONTRACT CHANGE ORDER NO 149
SHEET 19 OF 55

3. The first movement "breakaway" coefficient of friction and the dynamic coefficient of friction shall be measured at a sliding speed not exceeding 25 mm per minute
4. The test bearings shall be subjected to a minimum of 100 cycles of sliding displacement with peak-to-peak amplitude of at least 50 mm, at a sliding speed not exceeding 300 mm per minute. After cycling, the first movement "breakaway" coefficient of friction and dynamic coefficients of friction shall be measured again at a sliding speed not exceeding 25 mm per minute.

Proof Testing Procedures

Prototype testing of pot bearings shall conform to the following requirements:

A. Prior to installation, all pot bearings shall be proof tested.

B. The proof tests required shall be as follows:
   1. All bearings shall be proof tested for compression.
   2. Expansion bearings shall also be proof tested for coefficient of friction.
   3. Fixed type and guided bearings shall also be proof tested for horizontal load on the bearing.

C. Proof tests for compression: proof tests for compression shall conform to the requirements for prototype tests for compression.

D. Proof tests for coefficient of friction: proof tests for coefficient of friction shall conform to the requirements for prototype tests for coefficient of friction.

E. Proof test for horizontal load on the bearing: On fixed and guided bearing assemblies, the bearing shall be loaded simultaneously to 100 percent of the vertical design load and 100% of the design rotation while a horizontal load equal to 125% of the horizontal load shown on the plans is applied to the assembly.

Acceptance Criteria

The following acceptance criteria shall apply to the prototype and proof tests:

A. **Compression tests.** The bearings shall show no visible sign of:

   1. Metal-to-metal contact under full rotation.
   2. Damage to the sealing system
   3. Leakage of the elastomeric disk past the sealing system.
   4. Wear or damage to the elastomeric disk.
   5. Separation or lift-off of plates from each other or from PTFE surfaces,
   6. Flow of the PTFE out of its recess,
   7. Damage to the PTFE or
   8. Damage to the elastomeric disk.
   9. Other defects as determined by the Engineer.

The vertical deflection of the bearing, measured between 50% and 100% of the full test load, shall not exceed 3 mm.

CONTRACT NO. 04-0120R4

CONTRACT CHANGE ORDER NO 149

SHEET 20 OF 55

B. **Coefficient of friction tests.** The breakaway and dynamic coefficients of friction shall lie within the limits specified on the plans, but not more than 10% and 6% respectively.

C. **Horizontal load tests on the bearing.** The bearing shall show no visible signs of:
   1. Damage to the sealing system.
   2. Leakage of the elastomeric disk past the sealing system.
   3. Damage to the piston or pot wall.
   4. Slip or damage of the anchorage system.
   5. Damage to the elastomeric disk.
   6. Other defects as determined by the Engineer.

D. **Failure to comply.** If a prototype bearing fails to meet any of these criteria, the Contractor shall modify the design as necessary, submit revised working drawings including these modifications, and prototype test another bearing that is fabricated according to the modified design.
   If a proof tested bearing fails to meet these acceptance criteria, it shall be rejected.

E. **Certification.** All test results shall be certified correct and signed by the testing laboratory personnel who conducted the test and interpreted the test results. All test results shall include the identification numbers of the bearings tested.

Test Reports

The Contractor shall submit test reports that include the following:

A. A certified copy of the results of all component material tests.
B. A copy of the results of each prototype and proof bearing test. This report shall include at least a continuous record of vertical load vs. time for each compression test and lateral force/vertical force vs. displacement of the bearing for all other tests, and notes and photographs of any damage sustained during the testing. The report shall be certified by an authorized representative of the test facility.

SHIPPING AND HANDLING

Pot bearings shall be assembled at the factory and suitable temporary assembly ties shall be provided so that the entire assembly is shipped as a unit and remains intact when uncrated and installed. Pot bearings shall be delivered to the testing facility and to the job site in protective packaging for freight and handling purposes. Any damaged or scratched bearings shall be replaced by new bearings of the same type

INSTALLATION

Bearings and all mounting plates, including masonry plates, shall be installed in accordance with the procedures, and using the materials, specified in the approved Installation Manual and all requirements on the plans. Attention is drawn to the suggested installation sequence shown on the plans.

CONTRACT NO. 04-0120R4
CONTRACT CHANGE ORDER NO 149
SHEET 21 OF 55

A qualified technical representative of the manufacturer shall be present available for consultation during the installation of all bearings. The bearing shall be prevented from undergoing rotations during construction that are larger than the maximum design rotation.

Removal of Unsound Concrete (Pier E1 only)

Unsound concrete shall be removed as shown on the plans and to the limits designated by the Engineer. The Engineer will determine the soundness of all concrete. Unsound concrete is generally that concrete which emits a relatively dead or hollow sound when a chain is dragged over its surface or its surface is tapped with a metal tool. For removal of unsound concrete, equipment and tools shall not be used that, in the opinion of the Engineer, cause the removal of excess quantities of sound concrete along with the unsound concrete, or that will damage the existing reinforcement. Equipment used shall be fitted with suitable traps, filters, drip pans, or other devices to prevent oil or other deleterious matter from being deposited outside of the bearing installation area.

After the removal of unsound concrete has been completed, any existing reinforcing steel which has been exposed shall be restored to position and blocked and tied in conformance with the provisions in Section 52, "Reinforcement," of the Standard Specifications.

Reinforcing steel that has been damaged to the extent that the steel's usefulness is destroyed as a result of the Contractor's operations shall be repaired or replaced by the Contractor at the Contractor's expense.

Removing unsound concrete will be paid for as extra work as provided in Section 4-1.03D of the Standard Specifications.

Coring (Pier E1 only)

Coring locations and depths shall be as shown on the approved working drawings. Coring shall conform to the provisions in "Core Concrete" of these special provisions. The Contractor shall that ensure existing anchorage structural steel in Pier E1 is not damaged in any way by coring. If anchorage structural steel is encountered during coring, the Engineer shall be notified immediately and coring operations at the affected location shall be discontinued pending direction from the Engineer. It is expected that some reinforcing bars within the Pier E1 concrete will be cut by the coring and they need not be repaired. It is the structural steel anchor components for the cantilever span that must not be disturbed.

Cored holes within the group associated with one bearing shall be located with respect to each other to a tolerance of ± 10 mm within the core hole pattern. The core hole pattern associated with each bearing shall be located within ± 12 mm of the location shown on the plans.

Pintle and anchor bolt holes at Pier E1 shall be cored before the date of roll in.

When a roughened concrete surface is shown on the plans, the existing concrete surface shall be roughened to a full amplitude of approximately 6 mm by abrasive blasting, water blasting, or mechanical equipment.

Installation of Grout and Bedding Materials

Procedures for installing grout and bedding materials shall conform to the following:

CONTRACT NO. 04-0120R4

CONTRACT CHANGE ORDER NO 149

SHEET 22 OF 55

A. The installation procedures and bedding and grouting materials to be used shall be those developed by the Contractor, and approved as suitable by the Engineer, for the relevant mockup. Damage to stainless steel surface on the masonry plate will not be permitted.
B. At Bent 52A, vent holes and grout injection ports through the thickness of the masonry plate will be acceptable, subject to the approval of the Engineer. At Pier E1, no holes that penetrate the stainless steel on the masonry plate will be permitted.
C. Grout installation shall be performed by personnel experienced in the work.
D. Contractor shall provide containment for grout around the perimeter of the masonry plate.
E. Grout shall be mixed, placed and cured in accordance with the manufacturer's recommendations.
F. Vibration of the masonry plate to remove air pockets will be permitted, provided that no damage is inflicted on the stainless steel.
G. Grout shall be cured in accordance with the manufacturer's recommendations.

Masonry Plates

The masonry plate shall be installed within ± 6 mm from the elevation shown on plans, ± 0.5% from dead level, and ± 20 mm from plan location.

Bearings

Bearings shall be placed so that the angle between the uppermost surface of the bearing and the masonry plate does not exceed 1.0% after the self-weight of the truss has been transferred to the bearing. If the angle is greater than 1.0%, then the Contractor shall reduce the angle to less than 1.0% using the approved methods in the Installation Manual.

Temporary clamping devices

Temporary clamping devices shall not inhibit rotation of the bearing during set-down of the truss. The temporary clamping devices shall be removable once the bearing has been permanently secured to the masonry plate.

Temporary Restraint Assembly Devices (Pier E1 only)

The temporary restraint assembly devices for the expansion pot bearings at Pier E1 shall be removable once installation of the lead-rubber bearings is complete.

Protective Skirts (Pier E1 only)

The protective skirts for the expansion pot bearings at Pier E1 shall be installed, at the latest, directly after removal of the Temporary Restraint Assembly Device.

SUBMISSIONS AND SCHEDULING

The Contractor shall submit to the Engineer documentation according to the following schedule:

CONTRACT NO. 04-0120R4
CONTRACT CHANGE ORDER NO 149
SHEET 23 OF 55

Part 1

Part 1 of the documentation shall consist of, working drawings, calculations, draft Quality Control Program, draft Inspection and Maintenance Manual, proof of five years' experience in design and manufacture of pot bearings, and descriptions of the prototype and proof testing programs.

Part 1 documentation shall be submitted to the Engineer at least 39 weeks prior to the start of bearing installation. The Contractor shall allow three weeks for the Engineer's initial review. If modifications are needed, they shall be submitted no later than the submission of the prototype test results.

Part 2

Part 2 of the documentation shall consist of the draft Installation Manual. The procedures contained therein shall conform to the methods developed during the mockups, and approved by the Engineer.

Part 2 documentation shall be submitted to the Engineer after successful completion of the mockups, but at least 27 weeks prior to the start of bearing installation. The Contractor shall allow two weeks for the Engineer's initial review. If modifications are needed to the draft manual, they shall be submitted within one week after the Engineer's initial review. The Contractor shall allow two weeks for the Engineer's review and approval of the final Installation Manual.

The Contractor shall not start fabrication of prototype test specimens until the Engineer has approved the corrected versions of the Part 1 submissions and has provided initial review of the Part 2 submissions. The prototype test specimens shall conform to the approved working drawings and the approved Installation Manual.

Part 3

Part 3 of the documentation shall consist of the reports of the prototype tests.

Part 3 documentation shall be submitted to the Engineer at least 17 weeks prior to the start of bearing installation. The Contractor shall allow two weeks for the Engineer's review and approval. The Contractor shall not start fabrication of the production bearings until the Engineer has approved the prototype test results.

Part 4

Part 4 of the documentation shall consist of the reports of the proof tests.

Part 4 documentation shall be submitted to the Engineer at least 7 weeks prior to the start of bearing installation. The Contractor shall allow two weeks for the Engineer's review and approval. The Contractor shall not start installation of the bearings in the bridge until the Engineer has approved the proof test results.

Should the Engineer fail to review the complete Part 1 submittal within the time specified and if, in the opinion of the Engineer, the Contractor's controlling operation is delayed or interfered with by reason of the delay in reviewing the working drawing submittal, an extension of time commensurate with the delay in completion of the work thus caused will be granted in accordance with Section 8-1.09, "Right of Way Delays," of the Standard Specifications.

CONTRACT NO. 04-0120R4

CONTRACT CHANGE ORDER NO 149

SHEET 24 OF 55

The Contractor shall provide the Engineer with at least 14 days' written notice of the start of the mockups, the start of fabrication of the prototype bearings, and the start of fabrication of the production bearings.

No bearing shall be installed until the Engineer has determined that the Contractor has successfully completed and has approved, in writing, the working drawings, the prototype testing and the proof testing for the seismic isolation bearing to be used.

Within 3 weeks after approval of the final working drawings, the Contractor shall submit to the Engineer one complete set of corrected prints ofall working drawings for the pot bearings.

MEASUREMENT AND PAYMENT

The contract unit price paid for pot bearing shall include full compensation for furnishing all labor, materials, tools, equipment, and incidentals, shipment to and from the testing facility, storage of all pot bearings and for doing all the work involved in designing, fabricating, any re-testing, if required, and installing the pot bearing, complete in place, including mock-ups, coring of holes, roughening concrete, grouting, temporary supports, and cleaning and painting of pot bearings, as shown on the plans, as specified in the Standard Specifications and these special provisions, and as directed by the Engineer.

With the exception of any re-testing, all prototype and proof testing will be paid for by the State. The cost of any special mounting plates or adapter plates needed for testing shall be borne by the Contractor.

Any bearing that fails to meet the acceptance criteria shall be re-designed and re-tested at the Contractor's expense. The Contractor shall be responsible for all costs associated with manufacturing, shipping, storing and testing if any re-testing is required. Payment to the Contractor for pot bearings shall be reduced $5,400.00 for each prototype bearing re-tested, and $1,800.00 for each proof bearing re-tested.

Full compensation for modifications to the bridge structure or other existing facilities made necessary by the use of a particular bearing shall be considered as included in the contract unit price paid for pot bearing and no separate payment will be made therefor.

Full compensation for providing Installation Manuals and Inspection be considered as included in the contract unit price paid for pot bearing and no separate payment will be made therefor.

No payment will be made for bearings that fail to meet one or more of the acceptance criteria.

If a portion or all of bearings are manufactured at a site more than 100 miles from Sacramento additional shop inspection expenses will be sustained by the State. Payment to the Contractor for bearings will be reduced by $5,000 for each manufacturing site located more than 100 miles from Sacramento, or in the case of each manufacturing site located more than 1,000 miles from Sacramento, payment will be reduced by $8,000.

10.1.__ LEAD RUBBER BEARINGS

The lead rubber bearing system shall consist of a lead core rubber bearing, sole plates, masonry plates, stopper ring, bedding materials and anchorage components and all other necessary components and shall be designed, fabricated, and installed in conformance with the details shown on the plans and as specified in the Standard Specifications and these special provisions.

A lead core rubber bearing shall be an elastomeric bearing with one or more lead core(s). It shall consist of alternate layers of rubber and steel plates vulcanized together, with one or more preformed hole(s), each of which contains a tight-fitting lead plug.

BEARING SUPPLIERS

All lead rubber bearings used in the work shall be from the same manufacturer. The proposed lead rubber bearing supplier shall be selected from the following list:

BEARING SYSTEM	MANUFACTURER ADDRESS AND PHONE NUMBER
Lead Core/Rubber	DYNAMIC ISOLATION SYSTEM, INC. 885 DENMARK DR, SUITE 101 MCCARRAN, NV 89434 USA

GENERAL

The lead rubber bearings shall be designed, fabricated, prototype-tested, proof-tested and installed as shown on the plans and the approved working drawings, and as specified in these special provisions.

Attachments of the lead rubber bearing sole plate to the new truss shoe and the base plate shall be constructed as shown on the plans and shall conform to Section 55, "Steel Structures," of the Standard Specifications and "Steel Structures," of these special provisions.

All new metal surfaces of the bearings exposed to the atmosphere in the completed work, except stainless steel and anchorages embedded in concrete, shall be cleaned and painted. Cleaning and painting shall be in accordance with "Clean and Paint Structural Steel," of these special provisions.

Acceptance of the lead rubber bearings shall be contingent on approval of the working drawings and the Quality Control Program and on successful completion of the lead rubber prototype and proof tests. Development and approval of working drawings and any re-testing, if required, shall be at the Contractor's expense.

The manufacturer shall provide the Engineer with a Certificate of Compliance in accordance with the provisions of Section 6-1.07, "Certificates of Compliance," of the Standard Specifications. The certificate shall certify that the lead rubber bearings conform to the pre-qualified design and material requirements, and were manufactured in accordance with the approved fabrication quality control program. The certification shall be supported by a copy of the results of all prototype and proof tests performed on the bearings and bearing materials.

Attention is directed to the sections entitled "Order of Work," and "Temporary Supports," elsewhere in these special provisions.

CONTRACT NO. 04-0120R4

CONTRACT CHANGE ORDER NO 149

SHEET 26 OF 55

Attention is directed to the as-built plans for Bridge No. 33-0025 and "Project Information" of these special provisions regarding location of existing anchorage steel in Pier E1.

DOCUMENTATION

The Contractor shall provide at least the following documents:

A. Working drawings
B. Supplemental calculations
C. Quality control program
D. Test reports
E. Installation manual
F. Inspection and maintenance manual

Each working document, including each sheet of the calculations, shall be signed by an Engineer who is registered as a Civil Engineer in the State of California.

WORKING DRAWINGS

Working drawings and supplemental calculations for lead rubber bearings shall conform to "Working Drawings" of these special provisions.

The working drawings shall list the components that will be permanently deformed during prototype or proof testing.

Attention is directed to subsections "Testing," and "Mock-Up," of this section. Approval of working drawings will be contingent on Engineer's approval of prototype testing and mock-ups. The Contractor shall revise and resubmit to the Engineer for approval working drawings affected by changes required for successful completion of prototype testing and mock-ups, unless otherwise approved by the Engineer.

The working drawings shall contain all information required for the proper fabrication and installation of the lead rubber bearings, including, but not limited to, the following:

A. Complete details of the lead rubber bearing system, including material properties and dimensions of all bearing components.
B. Evaluation and confirmation that adequate space is available for coring and installation equipment.
C. Details of connecting plates, concrete pedestals, grout pads, anchor bolts, nuts, reinforced concrete pedestal heights and any required revisions or additions to new and existing structural steel, concrete reinforcement or other components of the structure necessary to accommodate the lead rubber bearings proposed for use.
D. Welding and inspection procedures. For any weld that is within 150 mm of rubber, the Contractor shall develop and use a procedure for monitoring the temperature of the rubber and ensure the rubber does not exceed 100°C.
E. Details of adapter plates needed for testing.
F. Details of stopper ring.
G. Details of temporary clamping device.

CONTRACT NO. 04-0120P4
CONTRACT CHANGE ORDER NO 149
SHEET 27 OF 55

H. Surfaces to be painted or metalized.
I. Grout mix design(s).
J. Construction schedule for lead rubber bearing installation.
K. Information on the initial vertical displacement and long-term vertical displacement under anticipated service loading, and design lateral displacement due to seismic loading.

Supplemental Calculations

The Contractor shall submit design calculations that supplement the working drawings and show conformance of the bearings to the design loadings, movements and other specified requirements. Calculations shall be prepared by an engineer who is registered as a Civil Engineer in the State of California. The calculations shall include, but are not limited to, the following:

A. A proposed fully defined performance hysteresis loop for each bearing type.
B. Analysis using lead rubber bearing design criteria shown on the plans, and elsewhere in these special provisions, for the design of the lead rubber bearings. The analysis results shall include as a minimum, the anticipated energy dissipated per cycle (EDC) for each bearing, fully defined hysteresis loop for each bearing, initial bearing stiffness, bearing yield point, secondary bearing stiffness after yield, maximum design displacement, maximum design lateral force transmitted through each bearing, and anticipated maximum and minimum downward seismic bearing loads.

QUALITY CONTROL PROGRAM

The Contractor shall submit to the Engineer fabrication quality control program procedures that address at least the following:

A. Incoming materials and storage;
B. Elastomer compound mixing;
C. Metals preparation; bearing build-up;
D. Procedures for alignment of steel plates;
E. Vulcanization
F. Materials testing procedures;
G. Marking and identification;
H. Shipping and handling
I. Documentation.

The Contractor shall submit 6 copies of the Quality Control Program for review and approval in accordance with the schedule described in sub-section "Submissions and Scheduling" of this section.

MATERIALS

Steel components of lead rubber bearings shall conform to "Steel Structures" of these special provisions. Anchor bolts not designated on the plans as high strength (HS) or stainless steel shall conform to the requirements in ASTM Designation: F

CONTRACT NO. 04-0D0R4
CONTRACT CHANGE ORDER NO 149
SHEET 28 OF 55

1554, Grade 36. High strength anchor bolts shall conform to the requirements in ASTM Designation: F 1554, Grade 105. Attention is directed to "Welding" and "Audits" of these special provisions. Welding of bearings shall conform to AWS D1.5.

Internal steel plates shall conform to the requirements of ASTM A 1011 and be Grade 36.

Base plates shall conform to ASTM A36, A709/709M, Grade 50, A 572 or A 588.

Surfaces within the grip of high strength bolted connections shall be cleaned and painted before assembly in accordance with the requirements for bolted connections in "Steel Structures," of these special provisions.

The materials in the elastomeric bearings shall conform to the following requirements:

The alternate layers of rubber and steel plates vulcanized together shall conform to the provisions for steel-laminated elastomeric bearings in ASTM Designation D 4014. Internal steel laminates shall be a minimum of 11 gage thick and shall not be galvanized. The lead core shall be a minimum of 99 percent pure lead.

Elastomer shall be Type NR and shall satisfy the low-temperature requirements of Grade 2, and the following:

TEST	ASTM TEST	REQUIREMENT
Shear modulus (kPa)	D 4014	689
Tensile Strength [kPa minimum]	D 412	13790
Elongation at Break (EB) [percent minimum]	D 412	500
Compression Set 22 hrs at 70°C [percent maximum]	D 395 Method B	40
Rubber-to-Metal Tear Strength [N/mm minimum]	D 624 Die C	31.5
Ozone Resistance ozone partial pressure of 25pphm	specimen - D 518A test - D 1149	no cracks visible with a 7X lens

The elastomer used for the circular ring pad on the stopper ring shall be unreinforced 60 durometer Neoprene or Natural Rubber, and shall conform to the material requirements of the AASHTO Construction Specifications.

Circular elastomeric ring pad on stopper ring shall be bonded with adhesive conforming to Federal Specification MMM-A-121, where shown on the plans.

Grout used for installing the lead rubber bearings at Pier E1 shall satisfy the following requirements:

CONTRACT NO. 04-0120R4

CONTRACT CHANGE ORDER NO 149

SHEET 29 OF 55

Location	Pier E1
Bearing	Lead rubber
Application	Bedding and pintles
REQUIREMENT	
To be proposed by the Contractor, and subject to the approval of the Engineer.	X
To be suitable for exterior use.	X
To have zero drying/curing shrinkage in conformance with ASTMC827.	X
To have proven history in similar applications.	X
To be suitable for the bedding thickness used	X
To pre-packaged, non-metallic, cementitious material containing no chlorides.	X
To contain fine aggregate.	X
To be suitable for installation by injection at very low pressure (20 kPa) or by pouring.	X

Grout strength shall be measured by cube strength in compression, in accordance with ASTM C109, and shall satisfy the following:

At lead-rubber bearings at Pier E1:

A. 25 MPa when the leveling screws are disengaged.
B. 40 MPa at the time of removal of the temporary restraining devices at the expansion pot bearings at Pier E1.

The same material may be used for the fixed pot bearings at Bent 52A and the lead-rubber bearings at Pier E1, provided that it satisfies the requirements for both applications. In place of the specified cementitious grout, the Contractor may propose alternative materials, including epoxy grouts, for approval by the Engineer, provided that they have strength at least equal to the value specified for the application and that they satisfy all other relevant requirements given in the table above.

DESIGN

The lead rubber bearings shall be designed by the Contractor to satisfy the bearing design criteria for the loading conditions, maximum lateral forces and displacements, rotations, hysteretic behavior and performance criteria shown on the plans. The bearing design shall be confirmed by the certified prototype test results for the bearings. In addition, if the plans or these special provisions indicate limiting parameters for a bearing system, the bearings shall conform to those parameters. The Contractor shall verify the integrity of the bearings during shipping and handling, including and when they are transported into position hanging from the truss, and shall supply temporary clamping devices as necessary.

CONTRACT NO. 04-012024
CONTRACT CHANGE ORDER NO 149
SHEET 30 OF 55

Compatibility with Engineer's Plans

The lead rubber bearings shall be compatible with the dimensional clearances and tolerances shown on the plans. The Contractor shall determine the required thickness of the external steel plates, subject to the dimensional constraints shown on the plans, the concrete bearing pedestal height, the bearing pedestal reinforcement and the thickness of the non-shrink grout pad at each lead rubber bearing, and shall verify all dimensions required for installation of the lead rubber bearings.

The Contractor shall check the adequacy of the mounting plate and bolts based on the lead rubber bearing system proposed for use and redesign the mounting plate and bolts, if necessary. The anchorage strength of the mounting plate and bolt system shall not be less than the strength of the system shown on the plans. The bearing height as shown on the plans may also be modified to accommodate installation. Installation of lead rubber bearings shall not alter the final bridge profile grade. Any re-design of the anchorage system or the bearing height shall be subject to the approval of the Engineer.

Design Criteria

The isolation bearings shall comply with all applicable provisions of the American Association of State Highway and Transportation Officials (AASHTO) "Guide Specifications for Seismic Isolation Design," latest edition. In the case of any conflict of requirements between the AASHTO Guide Specifications and this document, the requirements of these special provisions shall take precedence.

The lead rubber bearings shall be capable of operating as specified for an ambient air temperature range of 0°C to +40°C. The steel laminates shall be covered at the sides of the bearing with a minimum thickness of 13 mm of the same elastomer as specified for the elastomeric bearing.

The ratio of bonded area to lead plug area in plan shall be equal to or greater than 9.0 for bearings.

GROUTING MOCK-UP

The Contractor shall construct and test a grouting mock-up in accordance with the approved installation manual. The purpose of the grouting mock-up is to verify the installation methods proposed, suitability of the materials to the installation methods needed, and demonstrate that the necessary work can be accomplished by the Contractor within the working time of the bedding and grouting materials. Mock-up shall demonstrate that complete filling of space within pintle and anchorage rebar holes will be attained.

The mock-up shall not be part of the permanent structure and shall become the property of the Contractor. The mock-ups shall be removed from the work site and shall be disposed of in conformance with the provisions in Section 7-1.13, "Disposal of Material Outside the Highway Right of Way," of the Standard Specifications.

The grouting mock-up shall conform to the following:

A. A steel bearing plate 1740 mm x 1740 mm x 38 mm min. with leveling screws, locating lugs, and three removable pintles in pintle holes using the hole diameter and pintle pipe size shown on the plans. Three anchorage rebar shall be included

CONTRACT NO. 62-0120R4
CONTRACT CHANGE ORDER NO 149
SHEET 31 OF 55

as part of the mock-up. Anchorage rebar shall use the hole diameter and bar size shown on the plans.

B. Pintles and anchorage rebar shall be attached to the steel plate such that the pintles and anchorage rebar can be disconnected and the plate can be lifted after the bedding material is set.
C. The thickness of bedding material shall be the minimum shown on the plans.
D. The underside of the steel plate shall be covered with an adhesive-backed plastic membrane or other material to ensure debonding of the plate from the bedding material.
E. The mockup masonry plate shall be set and leveled as necessary and grouted with at least 15 minutes remaining before the bedding material becomes unworkable.
F. When the bedding material has reached a strength of 20 MPa, the mockup shall be disassembled and the adequacy of the installation procedure shall be verified. The grout shall be free from cracking and exhibit zero shrinkage in situ. The area of any air voids in the grout shall be less than 20% of the area of the plate. Depth of air pockets shall not exceed 4 mm.

If in the opinion of the Engineer acceptable installation results are not achieved, the process and/or the grouting material shall be modified and the mock-up repeated until successful results are achieved. If the same grout material is used for both the lead-rubber bearings at Pier E1 and the fixed pot bearings at Bent 52A, and subject to the approval of the Engineer, a single grouting mockup may be used for both applications, provided that the mockup demonstrates the adequacy of the procedures for both applications.

INSTALLATION MANUAL

The Contractor shall prepare a lead rubber bearing installation manual. The Contractor shall submit 6 copies of the draft installation manual for the bearings for review and approval by the Engineer. Final copies of the installation manual, revised to address the Engineer's review comments, shall be furnished in accordance with these special provisions. The schedule for submission shall conform to the requirements of sub-section "Submissions ands Scheduling" of this Section. Attention is directed to "Construction Surveying" of these special provisions. Schedule and durations identified in the installation manual shall conform to the schedule required in "Move Bridge" of these special provisions.

Installation sequence shown on the plans is for reference only. The Contractor shall be responsible for developing the installation sequence to be used.

The installation manual shall include, but not be limited to, the following:

A. Step-by-step procedure describing all aspects of lead rubber bearing installation, including installation sequence and setting diagrams, materials and procedures for leveling and alignment and attachment to the substructure and superstructure. The procedures for grouting and bedding of the masonry plates shall use the methods developed in the grouting and bedding mock Materials for the anchorage system shall conform to the requirements in Section 55-3.19, "Bearings and Anchorages," of the Standard Specifications and these special provisions. When

CONTRACT NO. 04-0120R4
CONTRACT CHANGE ORDER NO 149
SHEET 32 OF 55

the Standard Specifications are not fully applicable, the section(s) shall be cited and the exceptions noted on the working drawings. If no applicable Standard Specification is available, ASTM or other industry standard specifications shall be referenced. Attention is drawn to the suggested installation sequence shown on the plans.

B. Requirements for storage of the lead rubber bearings and details of temporary protection and support of the isolators during shipping, handling and installation.

C. Details of temporary clamping devices, if needed to maintain the integrity of the bearing during transportation and installation of the bearings, and procedures for their installation and removal. The Contractor shall verify that adequate space is available for removal of any temporary clamping devices after installation is complete.

FABRICATION

Procedures

Each bearing shall be molded as single unit, and shall be bonded and vulcanized under heat and pressure. Individually laminated pads shall not be stacked or cold bonded to create an isolation bearing.

Internal steel laminates shall be sand-blasted and cleaned of all surface mill-scale, rust, surface coatings and dirt before bonding. Their outer edges shall be rounded so that they are free from sharp corners and burrs.

Fabrication Tolerances

Bearing dimensions and permissible variations shall satisfy the requirements of ASTM D 4014-03, Sections 7.5 and 7.6. The permissible tolerance in flatness for any external plates shall conform to Section 55-3.05 "Flatness of Faying and Bearing Surfaces," of the Standard Specifications, but shall not vary more than 1.6 mm from a straightedge placed in any direction across the area.

MARKING, IDENTIFICATION AND STORAGE

A. **Identification.** Each lead rubber bearing shall be marked in indelible ink or flexible paint. The marking shall consist of the manufacturer's name, date of fabrication, contract number, lot number, bearing identification number, elastomer type and grade, and the installed location. The marking shall be on a surface visible after installation in the bridge.

B. **Storage.** All bearings, whether in the fabrication shop or an independent warehouse, shall be stored in a clean, dry, covered facility. When in storage, the bearings shall be kept banded, wrapped, and secured in a condition suitable for shipment.

INSPECTION AND MAINTENANCE MANUAL

The Contractor shall prepare an inspection and maintenance manual for the lead rubber bearings, and shall submit 6 copies of the inspection and maintenance manual for review and approval by the Engineer in accordance with the schedule specified in

CONTRACT NO. 04-012024

CONTRACT CHANGE ORDER NO 149

SHEET 33 OF 55

"Submissions and Scheduling" of these special provisions. The inspection and maintenance manual shall include, but not be limited to, the following:

A. Inspection requirements for the lead rubber bearings, including the recommended frequency of inspection. The manual shall include the specific observations to be made, and the acceptable range of values.
B. Maintenance requirements for the bearings, including the recommended frequency of maintenance.
C. Contact and telephone number for maintenance questions.

TESTING

General

Full sized lead rubber bearings shall be prototype and proof tested to verify compliance with the physical characteristics and energy requirements shown on the plans. Testing may be performed at the "Seismic Response Modification Device Test System (SRMD)" on the University of California, San Diego campus, or other suitable location as approved by the Engineer. All tests shall be performed in the presence of the Engineer.

The Contractor shall coordinate with the testing facility for the design and manufacturing of the adapter plates to be used to attach the bearings to the test apparatus. After testing, all adapter plates will become the property of the State.

The Contractor shall coordinate with the test facility to schedule the testing. As a minimum:

A. the Contractor shall notify in writing the test facility and the Engineer at least eight weeks prior to the shipping of bearings to be tested;
B. For prototype testing, the Contractor shall allow four weeks for the test facility to perform the prototype tests on each type of lead rubber bearing.
C. For proof testing, the Contractor shall allow one week for the test facility to perform the proof tests on each lead rubber bearing.

Lead rubber bearings for prototype and proof testing shall be marked in accordance with the requirements in these Special Provisions for marking and identification of production bearings.

The test specimens shall be conditioned at 21°C ±8°C for at least 12 hours prior to testing. The ambient temperature of the testing facility shall be 21°C ±8°C during the testing. The test specimens shall be allowed to cool between tests.

All prototype and proof tests shall be performed using continuous sinusoidal input at the period as shown on the plans for each device, or at a period as determined by the Engineer.

Unless otherwise determined by the Engineer, all testing shall follow the numerical sequences listed.

Prototype Testing Procedures

A complete series of prototype tests shall be performed on at least one full-sized specimen for each lead rubber bearing size and type designated on the plans.

CONTRACT NO. 64-0120R4
CONTRACT CHANGE ORDER NO 149
SHEET 34 OF 55

Specimens that have been subjected to prototype testing shall not be used in the finished work and shall become the property of the State.

A complete series of prototype tests shall be performed on each bearing designated for testing in each of 2 directions, which are at 0° and 90° relative to the primary axis of the lead rubber bearings for circular bearings, and at 0° and 45° relative to the primary axis of the lead rubber bearings for square bearings.

For all prototype tests and for each cycle of test, the time, axial load, axial displacement, shear force and shear displacement of the prototype specimen(s) shall be continuously recorded.

Prototype Test 1

A 5-minute sustained compression load test on each prototype bearing shall be conducted. The compressive load for the test shall correspond to a compressive stress of 8 MPa on the bonded area of the bearing.

Prototype Test 2

The vertical load shall be equal to the dead load plus seismic live load shown on the plans and shall remain constant during the test. The horizontal loading shall consist of twenty fully-reversed continuous sinusoidal cycles of loading at the maximum non-seismic lateral force shown on the plans.

Prototype Test 3

The vertical load shall be equal to the dead load plus seismic live load shown on the plans and shall remain constant during the test. If the total vertical load shown on the plans is zero, the test shall be carried out under constant axial displacement. The displacement shall be the value occurring when the platens of the test machine are in contact with the bearing but the axial and lateral loads are zero.

The horizontal loading shall consist of four fully reversed continuous sinusoidal cycles of loading at each of the following multiples of the maximum seismic lateral displacement (D_T) shown on the plans: 1.0, 0.25, 0.50, 0.75, and 1.0. The loadings shall be applied in the order stated here.

Prototype Test 4

The vertical load shall be equal to the dead load plus seismic live load shown on the plans, and shall remain constant during the test.

The horizontal loading shall consist of 15 fully-reversed sinusoidal cycles of loading to a displacement equal to the maximum seismic lateral displacement (D_T) shown on the plans.

Prototype Test 5

The vertical load shall be equal to the dead load plus seismic live load plus seismic overturning force shown on the plans, and shall remain constant during the test.

The horizontal loading shall consist of three fully reversed continuous sinusoidal cycles of loading at 1.1 times the maximum seismic lateral displacement (D_T) shown on the plans.

CONTRACT NO. 04-0120R4
CONTRACT CHANGE ORDER NO 149
SHEET 35 OF 55

Prototype Acceptance Test Criteria

Prototype specimens shall remain stable and without splits, fractures or lack of rubber to steel bond under all loading and displacement conditions. The hysteretic behavior of the specimens for the prototype tests shall remain stable at all loading conditions. Anchorage components shall show no signs of distress.

Bearings shall be inspected for uniformity of rubber layer thickness, lack of parallelism of the internal steel plates and surface cracking in accordance with ASTM D4014 Sections 9.1.3.1 and 9.1.3.2. The steel plates shall be located within 3mm of the positions specified on the approved working drawings.

In addition, specific tests shall satisfy the requirements of this section.

Prototype Test 2

A. The tangent stiffness for horizontal force-displacement shall be positive at all points on the curve.
B. The displacement produced by the force specified in Prototype Test 1 shall be less than or equal to the maximum non-seismic displacement due to maximum non-seismic lateral force as shown on the plans.

Prototype Test 3

A. The tangent stiffness for horizontal force-displacement shall be positive at all points on the curve.
B. At each displacement increment specified in Prototype Test 3, the effective stiffness, K_{eff}, shall be computed as the secant stiffness between points of (minimum displacement, minimum force) and (maximum displacement, maximum force). This definition shall be used even if the maximum force and displacement do not occur simultaneously. For the last required three cycles of the test, the value of K_{eff} for an individual cycle shall not differ from the average by more than 15%.
C. For the first series of testing at 1.0 times D_T, the average K_{eff} for the last 3 required cycles shall be within 15% of the value of K_{eff} shown on the plans.
D. For the first series of testing at 1.0 times D_T, the energy dissipated per cycle (EDC) for each of the last three required cycles shall be equal to or greater than 85% of the value of EDC shown on the plans.

Prototype Test 4

A. The tangent stiffness for horizontal force-displacement shall be positive at all points on the curve.
B. For each cycle, the EDC shall be equal to or greater than 90% of the value of EDC shown on plans.

Prototype Test 5

A. The tangent stiffness for horizontal force-displacement shall be positive at all points on the curve.

If the Engineer determines that a lead rubber bearing that is prototype tested fails to meet any of the foregoing acceptance criteria, then that bearing will be rejected and the

CONTRACT NO. 04-0120P4
CONTRACT CHANGE ORDER NO 149
SHEET 36 OF 55

Contractor shall modify the design as necessary, submit revised working drawings including these modifications, and prototype test another bearing that is fabricated according to the modified design.

Lead rubber bearing prototype testing operations shall not begin until the Engineer has approved the revised working drawings in writing. No extension of time or compensation will be made for modifying working drawings or supplemental calculations, for resubmittal and review of working drawings and supplemental calculations, for rejection of a bearing, and for designing and testing additional bearings.

Proof Test Procedures

The manufacturer may change the lead core diameter by ±10% without the need for new prototype tests in order to satisfy the proof test acceptance criteria.

Prior to installation, all lead rubber bearing types shall be proof tested as follows:

Proof Test 1 Proof Compression Test

A five-minute sustained proof load test on each production bearing shall be conducted. The compressive load for the test shall be 8 MPa on the bonded area of the bearing.

Proof Test 2 Proof Combined Compression and Shear Test

Each production bearing shall be tested at a constant vertical load of 1.0 times the total of dead load plus seismic live load shown on the plans and 4 full reversed continuous sinusoidal horizontal cycles of loading at 1.0 times the maximum seismic lateral displacement (D_T) shown on the plans. If the total vertical load shown on the plans is zero, the test shall be carried out under constant axial displacement. The displacement shall be the value occurring when the platens of the test machine are in contact with the bearing but the axial and lateral loads are zero. For each cycle of the test, the time, axial load, axial displacement, shear force and shear displacement of the specimen shall be continuously recorded.

Proof Testing Acceptance Criteria

The proof tests results shall satisfy the following:

A. Proof test specimens shall remain stable and without splits, fractures or lack of rubber to steel bond under all loading and displacement conditions. The hysteretic behavior of the specimens for the proof tests shall remain stable at all loading conditions. Anchorage components shall show no signs of distress.
B. Proof test bearings shall be inspected for uniformity of rubber layer thickness, lack of parallelism of the internal steel plates and surface cracking in accordance with ASTM D4014 Sections 9.1.3.1 and 9.1.3.2.

In addition, specific tests shall satisfy the following:

Proof Test 2

A. The tangent stiffness for horizontal force-displacement shall be positive at all points on the curve.

CONTRACT NO. 64-0120R4
CONTRACT CHANGE ORDER NO 149
SHEET 31 OF 55

B. The effective stiffness, K_{eff}, shall be computed as the secant stiffness between the points of (minimum displacement, minimum force) and (maximum displacement, maximum force). This definition shall be used even if the maximum force and displacement do not occur simultaneously. For the last required three cycles of the test, the value of K_{eff} for an individual cycle shall not differ from the average by more than 15%.
C. The average K_{eff} for the last 3 required cycles shall be within 15% of the value of K_{eff} shown on plans.
D. For the first series of testing at 1.0 times DT the energy dissipated per cycle (EDC) for each of the last three required cycles shall be equal to or greater than the value of EDC shown on the plans

If the Engineer determines that a bearing that is proof tested fails to meet one or more of the acceptance criteria for testing, then that bearing will be rejected. No extension of time or compensation will be made for re-testing additional bearings due to rejection of a bearing.

Test reports

Within 14 days after completion of prototype and proof testing, the Contractor shall submit to the Engineer six (6) copies of the complete test results for the bearings tested. Tests results shall be certified correct and signed by the testing laboratory personnel who conducted the tests and interpreted the test results.

The test reports shall include, but not be limited to the following:

A. Key personnel, location of tests, test equipment, type and identifying mark of each bearing tested.
B. A certified copy of the results of all component material tests.
C. A copy of the results of each bearing test conducted in that program. This report shall include at least a continuous record of compressive force and compressive displacement, shear force and shear displacement of the bearing for each load or displacement level used in the test program, and notes and photographs of any damage sustained during the testing.

SHIPPING AND HANDLING

Lead rubber bearings shall be assembled at the factory and suitable temporary assembly ties shall be provided so that the entire assembly is shipped as a unit and remains intact when uncrated and installed. Lead rubber bearings shall be delivered to the testing facility and to the job site in protective packaging for freight and handling purposes. Any damaged or scratched bearings shall be replaced by new bearings of the same type.

INSTALLATION

Each lead rubber bearing and all mounting plates, including masonry plates, shall be installed in accordance with the procedures, and using the materials, specified in the

CONTRACT NO. 04-0120R4
CONTRACT CHANGE ORDER NO 149
SHEET 38 OF 55

approved installation manual and all requirements on the plans. Attention is drawn to the suggested installation sequence shown on the plans.

A qualified technical representative of the manufacturer shall be present and available for consultation during installation.

Remove Unsound Concrete

Unsound concrete shall be removed as shown on the plans and to the limits designated by the Engineer. Unsound concrete is generally that concrete which emits a relatively dead or hollow sound when a chain is dragged over its surface or its surface is tapped with a metal tool. Concrete encasing corroded reinforcing steel beyond the limits identified by the sound may be considered as unsound concrete. The Engineer will determine the soundness of all concrete.

Equipment and tools shall not be used to remove unsound concrete which, in the opinion of the Engineer, cause the removal of excess quantities of sound concrete along with the unsound concrete. Equipment used shall be fitted with suitable traps, filters, drip pans, or other devices to prevent oil or other deleterious matter from being deposited outside of the bearing installation area.

After the removal of unsound concrete has been completed, any existing reinforcing steel which has been exposed shall be restored to position and blocked and tied in conformance with the provisions in Section 52, "Reinforcement," of the Standard Specifications.

Reinforcing steel that has been damaged to the extent that the steel's usefulness is destroyed as a result of the Contractor's operations, shall be repaired or replaced by the Contractor at the Contractor's expense.

Removing unsound concrete will be paid for as extra work as provided in Section 4-1.03D of the Standard Specifications.

Coring

Coring locations and depths shall be as shown on the approved working drawings. Coring shall conform to the provisions in "Core Concrete," of these special provisions. The Contractor shall ensure that existing anchorage structural steel in Pier E1 is not damaged in any way by coring. If anchorage structural steel is encountered during coring, the Engineer shall be notified immediately and coring operations at the affected location shall be discontinued pending direction from the Engineer. Reinforcing bars within Pier E1 may be cut by coring and need not be repaired.

Cored holes within the group associated with one bearing shall be located with respect to each other to a tolerance of ± 12 mm within the core hole pattern. The core hole pattern associated with each bearing shall be located within ± 12 mm of the location shown on the plans.

Pintle and anchor bolt holes at Pier E1 shall be cored before the date of roll in.

When a roughened concrete surface is shown on the plans, the existing concrete surface shall be roughened to a full amplitude of approximately 6 mm by abrasive blasting, water blasting, or mechanical equipment.

Installation of Grout and Bedding Materials

Procedures for installing grout and bedding materials shall conform to the following:

CONTRACT NO. 04-012024

CONTRACT CHANGE ORDER NO 149

SHEET 39 OF 55

A. The installation procedures and bedding and grouting materials to be used shall be those developed by the Contractor, and approved as suitable by the Engineer, for the relevant mockup.
B. Bearings shall be firmly supported throughout grouting and curing to ensure no movement is allowed relative to the top of Pier E1. Use of leveling screws to support loads from the floorbeam during grouting and curing will be allowed.
C. Grout installation shall be performed by personnel experienced in the work.
D. Contractor shall provide containment for grout around the perimeter of the masonry plate.
E. Grout shall be mixed, installed, and cured in accordance with the manufacturer's recommendations.
F. Grooves up to 6 mm deep in the underside of the masonry plate to remove air pockets will be permitted. Vibration of the masonry plate to remove air pockets will be permitted, provided that it causes no permanent movement of the masonry plate relative to the pier.

Bearings

Bearings, including external plates, shall be installed in continuous and firm contact with the underside of the truss floor-beam. The truss floor-beam underside shall be flat and planar with a maximum deviation from plane of 3 mm allowed.

Masonry Plates

The masonry plate shall be set so that it is in continuous and firm contact with the lower external plate of the bearing, prior to welding. The maximum gap between the two shall be less than 3 mm.

Temporary Clamping Devices

Bearings shall be supplied with temporary clamping devices that will safely hold the assembled bearing during storage, shipping, and when it is transported hanging from the truss. The temporary clamping devices shall be removable once the masonry plate has been grouted.

SUBMISSIONS AND SCHEDULING

The Contractor shall submit to the Engineer documentation according to the following schedule:

Part 1

Part 1 of the documentation shall consist of, working drawings, calculations, draft Quality Control Program, draft Inspection and Maintenance Manual, proof of five years' experience in design and manufacture of lead rubber bearings, and descriptions of the prototype and proof testing programs.

Part 1 documentation shall be submitted to the Engineer at least 39 weeks prior to the start of bearing installation. The Contractor shall allow three weeks for the Engineer's

CONTRACT NO. 04-0120P4
CONTRACT CHANGE ORDER NO 149
SHEET 40 OF 55

initial review. If modifications are needed, they shall be submitted no later than the submission of the prototype test results.

Part 2

Part 2 of the documentation shall consist of the draft Installation Manual. The procedures contained therein shall conform to the methods developed during the mockups, and approved by the Engineer.

Part 2 documentation shall be submitted to the Engineer after successful completion of the mockups, but at least 27 weeks prior to the start of bearing installation. The Contractor shall allow two weeks for the Engineer's initial review. If modifications are needed to the draft manual, they shall be submitted within one week after the Engineer's initial review. The Contractor shall allow two weeks for the Engineer's review and approval of the final Installation Manual.

The Contractor shall not start fabrication of prototype test specimens until the Engineer has approved the corrected versions of the Part 1 submissions and has provided initial review of the Part 2 submissions. The prototype test specimens shall conform to the approved working drawings and the approved Installation Manual.

Part 3

Part 3 of the documentation shall consist of the reports of the prototype tests.

Part 3 documentation shall be submitted to the Engineer at least 17weeks prior to the start of bearing installation. The Contractor shall allow two weeks for the Engineer's review and approval. The Contractor shall not start fabrication of the production bearings until the Engineer has approved the prototype test results.

Part 4

Part 4 of the documentation shall consist of the reports of the proof tests.

Part 4 documentation shall be submitted to the Engineer at least 7 weeks prior to the start of bearing installation. The Contractor shall allow two weeks for the Engineer's review and approval. The Contractor shall not start installation of the bearings in the bridge until the Engineer has approved the proof test results.

Should the Engineer fail to review the complete working drawing submittal within the time specified and if, in the opinion of the Engineer, the Contractor's controlling operation is delayed or interfered with by reason of the delay in reviewing the working drawing submittal, an extension of time commensurate with the delay in completion of the work thus caused will be granted in accordance with Section 8-1.09, "Right of Way Delays," of the Standard Specifications.

The Contractor shall provide the Engineer with at least 14 days' written notice of the start of the mockups, the start of fabrication of the prototype bearings, and the start of fabrication of the production bearings.

No bearing shall be installed until the Engineer has determined that the Contractor has successfully completed and has approved, in writing, the working drawings, the prototype testing and the proof testing for the lead rubber bearing to be used.

Within 3 weeks after approval of the final working drawings, the Contractor shall submit to the Engineer one complete set of corrected prints of all working drawings for the lead rubber bearings.

CONTRACT NO. 04-012024

CONTRACT CHANGE ORDER NO 149

SHEET 41 OF 55

MEASUREMENT AND PAYMENT

The contract unit price paid for lead rubber bearings shall include full compensation for furnishing all labor, materials, tools, equipment and incidentals, for the following:

A. Design. All design procedures, including but not limited to supplemental calculations and preparation of working drawings.
B. Fabrication. Fabrication of all components of the bearing, including but not limited to the lead rubber bearing units, mounting plates, stopper rings, and all attachment devices.
C. Mockups. Preparation and execution of mockups, and modification and re-execution of the procedures as necessary to achieve results that satisfy the requirements of these special provisions.
D. Testing. The cost for all prototype testing shall be borne by the Contractor. With the exception of any re-testing, all proof testing will be paid for by the State. Any bearing that fails to meet the acceptance criteria shall be redesigned and re-tested at the Contractor's expense. The cost of any special mounting plates or adapter plates needed for testing shall be borne by the Contractor.
E. Shipping and storage. All costs of shipping to and from the test facility, and storage, shall be borne by the Contractor.
F. Installation. All procedures for installing the bearings complete in place, including but not limited to cleaning and painting of lead rubber bearings, coring of holes, roughening concrete, provision of temporary supports, grouting, attachment of the lead rubber bearings to the pier and superstructure, and having the manufacturer present during installation and available for consultation,.

All work shall be performed as shown on the plans, as specified in the Standard Specifications and these special provisions, and as directed by the Engineer.

Any bearing that fails to meet the acceptance criteria shall be redesigned and re-tested at the Contractor's expense. The Contractor shall be responsible for all costs associated with manufacturing, shipping, storing and testing if any re-testing should be required. Payment to the Contractor for lead rubber bearings shall be reduced $5,400.00 for each prototype bearing re-tested, and $1,800.00 for each proof bearing re-tested.

Full compensation for modifications to the bridge structure or other existing facilities made necessary by the use of a particular lead rubber bearing, shall be considered as included in the contract unit price paid for lead rubber bearing and no separate payment will be made therefor.

Full compensation for providing installation manuals and inspection and maintenance manuals shall be considered as included in the contract price unit paid for lead rubber bearing and no separate payment will be made therefor.

No payment will be made for lead rubber bearings that fail to meet one or more of the acceptance criteria.

CONTRACT NO. 64-0120R4
CONTRACT CHANGE ORDER NO 149
SHEET 42 OF 55

If a portion or all of lead rubber bearings are manufactured at a site more than 100 miles from Sacramento additional shop inspection expenses will be sustained by the State. Payment to the Contractor for lead rubber bearings will be reduced by $5,000 for each manufacturing site located more than 100 miles from Sacramento, or in the case of each manufacturing site located more than 1,000 miles from Sacramento, payment will be reduced by $8,000.

CONTRACT NO. 04-0120R4

CONTRACT CHANGE ORDER NO 149

SHEET 43 OF 55

INDEX TO PLANS

SHEET NO. TITLE

1.	GENERAL PLAN	(Note 1 & 3)
2.	INDEX TO PLANS	(Notes 1 to 5)
3.	GENERAL NOTES NO. 1	(Note 1)
4.	GENERAL NOTES NO. 2	(Note 3)
5.	DECK CONTOURS	
6.	FOUNDATION PLAN	(Note 1)
7.	BENT 52A LAYOUT	
8.	BENT CAP DETAILS NO. 1	
9.	BENT CAP DETAILS NO. 2	
10.	BENT CAP DETAILS NO. 3	
11.	BENT CAP DETAILS NO. 4	(Note 5)
12.	BENT 52A FOOTING DETAILS NO. 1	(Note 1)
13.	BENT 52A FOOTING DETAILS NO. 2	
14.	SKID BENT FOOTING DETAILS NO. 1	
15.	SKID BENT FOOTING DETAILS NO. 2	
16.	SKID BENT FOOTING DETAILS NO. 3	
17.	SKID BENT FOOTING DETAILS NO. 4	
18.	SKID BENT FOOTING DETAILS NO. 5	
19.	SKID BENT FOOTING DETAILS NO. 6	
20.	SHEET NOT USED	
21.	SUPPORT AT PIER E1	(Note 5)
22.	SUPPORT AT PIER E1 DETAILS NO. 1	
23.	SUPPORT AT PIER E1 DETAILS NO. 2	
24.	SUPPORT AT PIER E1 DETAILS NO. 3	
25.	SHEET NOT USED	
26.	SHEET NOT USED	
27.	FRAMING PLAN NO. 1	(Note 3)
28.	FRAMING PLAN NO. 2	
29.	TYPICAL SECTION	
30.	CAMBER	
31.	SHEET NOT USED	
32.	TRUSS LAYOUT NO. 1	(Note 3)
33.	TRUSS LAYOUT NO. 2	
34.	TRUSS LAYOUT NO. 3	
35.	TRUSS LAYOUT NO. 4	
36.	TRUSS JOINT DETAILS NO. 1	
37.	TRUSS JOINT DETAILS NO. 2	
38.	TRUSS JOINT DETAILS NO. 3	
39.	TRUSS JOINT DETAILS NO. 4	
40.	TRUSS JOINT DETAILS NO. 5	
41.	TRUSS JOINT DETAILS NO. 6	
42.	TRUSS JOINT DETAILS NO. 7	
43.	TRUSS JOINT DETAILS NO. 8	
44.	TRUSS JOINT DETAILS NO. 9	
45.	TRUSS JOINT DETAILS NO. 10	
46.	TRUSS JOINT DETAILS NO. 11	
47.	TRUSS JOINT DETAILS NO. 12	
48.	TRUSS JOINT DETAILS NO. 13	
49.	TRUSS JOINT DETAILS NO. 14	
50.	TRUSS JOINT DETAILS NO. 15	
51.	TRUSS JOINT DETAILS NO. 16	
52.	TRUSS JOINT DETAILS NO. 17	
53.	TRUSS JOINT DETAILS NO. 18	
54.	TRUSS JOINT DETAILS NO. 19	
55.	TRUSS JOINT DETAILS NO. 20	
56.	TRUSS JOINT DETAILS NO. 21	
57.	TRUSS JOINT DETAILS NO. 22	
58.	FLOOR BEAM DETAILS NO. 1	
59.	FLOOR BEAM DETAILS NO. 2	
60.	FLOOR BEAM DETAILS NO. 3	
61.	STRINGER DETAILS NO. 1	(Note 3)
62.	STRINGER DETAILS NO. 2	
63.	STRINGER DETAILS NO. 3	
64.	STRINGER DETAILS NO. 4	
65.	STRINGER DETAILS NO. 5	
66.	STRINGER DETAILS NO. 6	
67.	UPPER LATERAL BRACING LAYOUT NO. 1	
68.	UPPER LATERAL BRACING LAYOUT NO. 2	
69.	LOWER LATERAL BRACING LAYOUT NO. 1	
70.	LOWER LATERAL BRACING LAYOUT NO. 2	
71.	LATERAL BRACING DETAILS NO. 1	
72.	LATERAL BRACING DETAILS NO. 2	
73.	LATERAL BRACING DETAILS NO. 3	
74.	LATERAL BRACING DETAILS NO. 4	
75.	LATERAL BRACING DETAILS NO. 5	
76.	LATERAL BRACING DETAILS NO. 6	
77.	LATERAL BRACING DETAILS NO. 7	
78.	LATERAL BRACING DETAILS NO. 8	
79.	LATERAL BRACING DETAILS NO. 9	
80.	SHEET NOT USED	
81.	SHEET NOT USED	
82.	SHEET NOT USED	
83.	SHEET NOT USED	
84.	STEEL GIRDER DETAILS	(Note 3)
85.	MAN HOLE & HAND HOLE DETAILS	
86.	CONCRETE DECK DETAILS NO. 1	
87.	CONCRETE DECK DETAILS NO. 2	
88.	CONCRETE DECK DETAILS NO. 3	
89.	POUR SEQUENCE	
90.	BENT 52A EXPANSION JOINT LAYOUT	(Note 4)
91.	BENT 52A EXPANSION JOINT DETAILS NO. 1	
92.	BENT 52A EXPANSION JOINT DETAILS NO. 2	
93.	BENT 52A EXPANSION JOINT DETAILS NO. 3	
94.	BENT 52A EXPANSION JOINT DETAILS NO. 4	
95.	BENT 52A EXPANSION JOINT DETAILS NO. 5	
96.	BENT 52A EXPANSION JOINT DETAILS NO. 6	
97.	BENT 52A EXPANSION JOINT BARRIER NO. 1	
98.	BENT 52A EXPANSION JOINT BARRIER NO. 2	
99.	PIER E1 EXPANSION JOINT LAYOUT	
100.	PIER E1 EXPANSION JOINT DETAILS NO. 1	
101.	PIER E1 EXPANSION JOINT DETAILS NO. 2	
102.	PIER E1 EXPANSION JOINT DETAILS NO. 3	
103.	PIER E1 EXPANSION JOINT DETAILS NO. 4	
104.	PIER E1 EXPANSION JOINT DETAILS NO. 5	
105.	PIER E1 EXPANSION JOINT BARRIER NO. 1	
106.	PIER E1 EXPANSION JOINT BARRIER NO. 2	
107.	PIER E1 EXPANSION JOINT BARRIER NO. 3	
108.	PIER E1 EXPANSION JOINT BARRIER NO. 4	
109.	PIER E1 EXPANSION JOINT BARRIER NO. 5	
110.	PIER E1 EXPANSION JOINT BARRIER NO. 6	
111.	PIER E1 EXPANSION JOINT BARRIER NO. 7	
112.	JOINT SEAL ASSEMBLY	(Note 3)
113.	BEARING DETAILS NO. 1	(Note 5)
114.	BEARING DETAILS NO. 2	
114A.	BEARING DETAILS NO. 3	
114B.	BEARING DETAILS NO. 4	
144C.	BEARING DETAILS NO. 5	
114D.	BEARING DETAILS NO. 6	
115.	MISCELLANEOUS DETAILS NO. 1	(Note 3)
116.	MISCELLANEOUS DETAILS NO. 2	
117.	MISCELLANEOUS DETAILS NO. 3	
118.	MISCELLANEOUS DETAILS NO. 4	
119.	MISCELLANEOUS DETAILS NO. 5	
120.	EXISTING TRUSS LAYOUT NO. 1	
121.	EXISTING TRUSS LAYOUT NO. 2	
122.	EXISTING TRUSS DETAILS NO. 1	
123.	EXISTING TRUSS DETAILS NO. 2	
124.	EXISTING TRUSS DETAILS NO. 3	
125.	EXISTING TRUSS DETAILS NO. 4	
126.	EXISTING TRUSS DETAILS NO. 5	
127.	EXISTING TRUSS DETAILS NO. 6	
128.	EXISTING TRUSS DETAILS NO. 7	
129.	EXISTING TRUSS DETAILS NO. 8	
130.	EXISTING TRUSS DETAILS NO. 9	
131.	EXISTING TRUSS DETAILS NO. 10	
132.	SKID BENT LAYOUT	(Note 2)
133.	SKID BENT SECTIONS NO. 1	
134.	SKID BENT SECTIONS NO. 2	
135.	KID BENT SECTIONS NO. 3	
136.	SKID BENT DETAILS NO. 1	
137.	SKID BENT DETAILS NO. 2	
138.	SKID BENT DETAILS NO. 3	
139.	SKID BENT DETAILS NO. 4	
140.	SKID BENT DETAILS NO. 5	
141.	SKID BENT DETAILS NO. 6	
142.	SKID BENT DETAILS NO. 7	
143.	SKID BENT DETAILS NO. 8	
144.	SKID BENT DETAILS NO. 9	
145.	SKID BENT DETAILS NO. 10	
146.	SKID BENT DETAILS NO. 11	
147.	SKID BEAM DETAILS NO. 1	
148.	SKID BEAM DETAILS NO. 2	
149.	SKID BEAM DETAILS NO. 3	
150.	SKID BEAM DETAILS NO. 4	
151.	SKID BEAM DETAILS NO. 5	
152.	SKID BEAM DETAILS NO. 6	
153.	SKID BEAM DETAILS NO. 7	
154.	SHEET NOT USED	
155.	ROLL-OUT ROLL-IN OPERATION SEQUENCE NO. 1	
156.	ROLL-OUT ROLL-IN OPERATION SEQUENCE NO. 2	
157.	ROLL-OUT ROLL-IN OPERATION SEQUENCE NO. 3	
158.	ROLL-OUT ROLL-IN OPERATION SEQUENCE NO. 4	
159.	ROLL-OUT ROLL-IN OPERATION SEQUENCE NO. 5	
160.	ROLL-OUT ROLL-IN OPERATION SEQUENCE NO. 6	
161.	ROLL-OUT ROLL-IN TOLERANCES AND DEFLECTIONS	
162.	EXISTING YB4 TRUSS LIFTING PROCEDURE	
163.	NEW ETI TRUSS SETTING PROCEDURE	
164.	SHEET NOT USED	
165.	SHEET NOT USED	
166.	EXISTING YB4 TRUSS WORK PLAN NO. 1	
167.	EXISTING YB4 TRUSS WORK PLAN NO. 2	
168.	TO 200. SHEET NOT USED	
201.	LOG OF TEST BORINGS NO. 1	(Note 1)
202.	LOG OF TEST BORINGS NO. 2	
203.	LOG OF TEST BORINGS NO. 3	
204.	LOG OF TEST BORINGS NO. 4	
205.	LOG OF TEST BORINGS NO. 5	
206.	LOG OF TEST BORINGS NO. 6	
207.	LOG OF TEST BORINGS NO. 7	
208.	LOG OF TEST BORINGS NO. 8	
209.	LOG OF TEST BORINGS 1 OF 17	
210.	LOG OF TEST BORINGS 3 OF 17	
211.	LOG OF TEST BORINGS 5 OF 17	
212.	LOG OF TEST BORINGS 6 OF 17	
213.	LOG OF TEST BORINGS 16 OF 17	
214.	LOG OF TEST BORINGS 17 OF 17	

Caltrans Metric

DIST	COUNTY	ROUTE	KILOMETER POST TOTAL PROJECT	SHEET No	TOTAL
04	SF	80	12.6/13.2		

Madan K. Sah
REGISTERED CIVIL ENGINEER

6-6-08
PLANS APPROVAL DATE

The State of California or its officers or agents shall not be responsible for the accuracy or completeness of electronic copies of this plan sheet.

REGISTERED PROFESSIONAL ENGINEER — Madan Kumar Sah — No. C59203 — Exp. 06/30/09 — CIVIL — STATE OF CALIFORNIA

T.Y. LIN / MOFFATT & NICHOL
Two Harrison Street, Suite 500
San Francisco, CA 94105

100% PS&E

CONTRACT NO. 04-0120R4

CONTRACT CHANGE ORDER NO 149

SHEET 44 OF 55

Notes:

1. Sheets pertaining to 100% Concrete Substructure submittal (Submittal Date 11-5-07).
2. Sheets pertaining to 100% Skid Bent and Skid Beam submittal (Submittal Date 3-15-08).
3. Sheets pertaining to 100% Truss submittal (Submittal Date 4-7-08).
4. Sheets pertaining to 100% Expansion Joints and Expansion Joint Barriers submittal (Submittal Date 5-12-08).
5. Sheets pertaining to 100% Bearing submittal (Submittal Date 6-6-08).

ALL DIMENSIONS ARE IN MILLIMETERS UNLESS OTHERWISE SHOWN

T. Ostrom/M. Whiteside/A. Aklnsanya
DESIGN OVERSIGHT

SIGN OFF DATE

	BY	CHECKED
DESIGN	M. Sah	S. Cheng
DETAILS	S. Lee	A. Lee
QUANTITIES	H. Nelson	A. Lee

PREPARED FOR THE STATE OF CALIFORNIA DEPARTMENT OF TRANSPORTATION

M. Sah — PROJECT ENGINEER
S. Abbas — PROJECT MANAGER

BRIDGE NO. 34-0006 (TEMP)
KILOMETER POST 12.6

CU 04
EA 0120R4

DISREGARD PRINTS BEARING EARLIER REVISION DATES

REVISION DATES (PRELIMINARY STAGE ONLY): 11/5/07 | 3/15/08 | 4/7/08 | 5/12/08 | 6/06/08

SHEET 2 OF 214

SAN FRANCISCO OAKLAND BAY BRIDGE EAST SPAN SEISMIC SAFETY PROJECT

EAST TIE-IN

INDEX TO PLANS

DESIGN DETAIL SHEET (METRIC) (REV. 3/1/98)
©DATE© ©TIME© Pen Table File

ORIGINAL SCALE IN MILLIMETERS FOR REDUCED PLANS 0 10 20 30 40 50 60 70 80 90 100

FILE => p:\bb\04-012001\eti\dgn\aaitp-1.dgn

USERNAME => ALee DATE PLOTTED => 6/6/2008 TIME PLOTTED => 3:47:23 PM FILE => p:\bb\04-012001\eti\dgn\aaitp-1.dgn

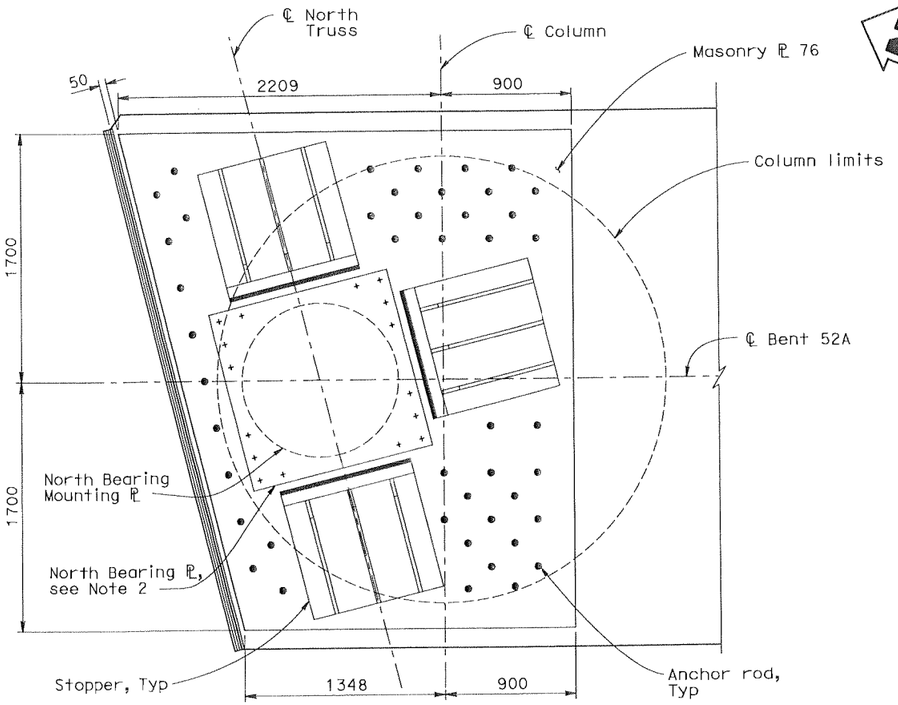

PLAN-NORTH BEARING

1:20

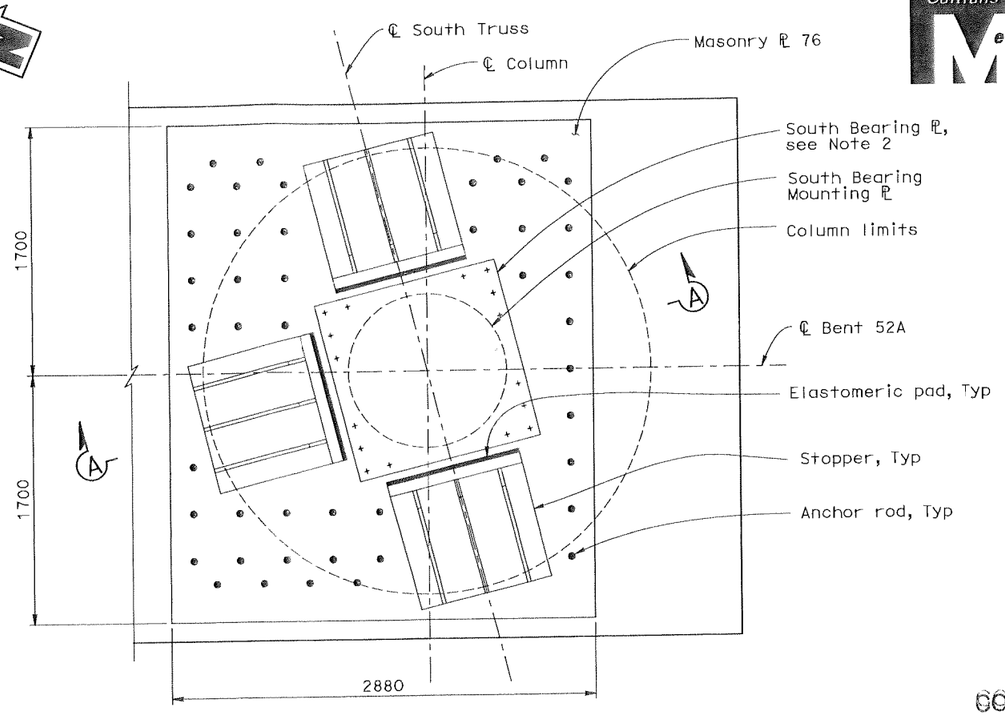

PLAN-SOUTH BEARING

1:20

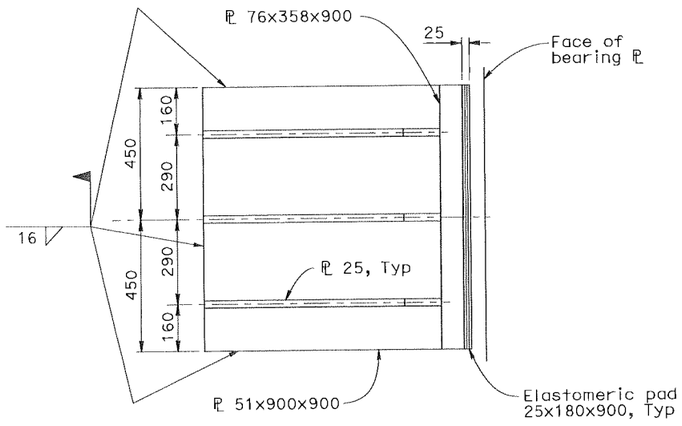

PLAN-STOPPER

1:10

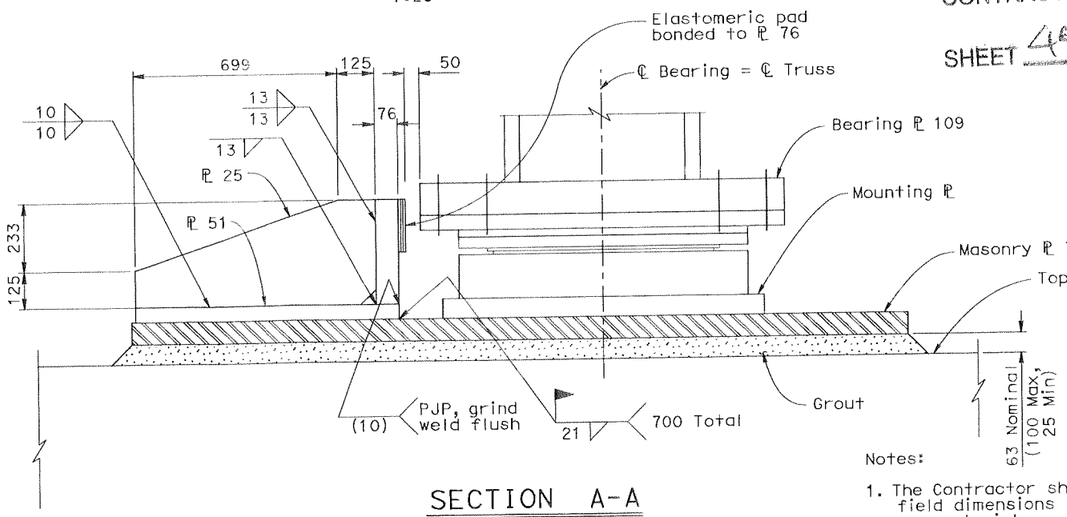

SECTION A-A

1:10

Anchor rods not shown for clarity

Notes:

1. The Contractor shall verify all controlling field dimensions before ordering or fabricating any material.
2. For North and South bearing details, see "Bearing Details No. 4" sheet.

DIST	COUNTY	ROUTE	KILOMETER POST TOTAL PROJECT	SHEET No	TOTAL
04	SF	80	12.6/13.2		

REGISTERED CIVIL ENGINEER

6-6-08

PLANS APPROVAL DATE

The State of California or its officers or agents shall not be responsible for the accuracy or completeness of electronic copies of this plan sheet.

REGISTERED PROFESSIONAL ENGINEER — Richard V. Nutt — No. C 20665 — Exp. 9/30/09 — CIVIL — STATE OF CALIFORNIA

T.Y. LIN / MOFFATT & NICHOL
Two Harrison Street, Suite 500
San Francisco, CA 94105

CONTRACT NO. 64-0120R4

CONTRACT CHANGE ORDER NO 149

SHEET 45 OF 55

100% PS&E

FILE => p:\bb\04-012001\etl\dgn\aebn04.dgn
TIME PLOTTED => 3:47:26 PM
DATE PLOTTED => 6/6/2008
USERNAME => Alee

ALL DIMENSIONS ARE IN MILLIMETERS UNLESS OTHERWISE SHOWN

SAN FRANCISCO OAKLAND BAY BRIDGE
EAST SPAN SEISMIC SAFETY PROJECT

EAST TIE-IN

BENT CAP DETAILS NO. 4

		BY	CHECKED
DESIGN		R. Nutt	S. Cheng
DETAILS		S. Lee, P. Zhao	A. Lee
QUANTITIES		H. Nelson	A. Lee

T. Ostrom/M. Whiteside/A. Akinsanya
DESIGN OVERSIGHT

SIGN OFF DATE

PREPARED FOR THE STATE OF CALIFORNIA DEPARTMENT OF TRANSPORTATION

M. Sah
PROJECT ENGINEER
S. Abbas
PROJECT MANAGER

BRIDGE NO. 34-0006 (TEMP)
KILOMETER POST 12.6

CU EA 0120R4

DISREGARD PRINTS BEARING EARLIER REVISION DATES

REVISION DATES (PRELIMINARY STAGE ONLY): 11/05/07 6/06/08

SHEET 11 OF 214

DESIGN DETAIL SHEET (METRIC) (REV. 3/1/98)
⊕DATE⊕ ⊕TIME⊕ Pen Table File

ORIGINAL SCALE IN MILLIMETERS FOR REDUCED PLANS 0 10 20 30 40 50 60 70 80 90 100

FILE => p:\bb\04-012001\etl\dgn\aebn04.dgn

DIST	COUNTY	ROUTE	KILOMETER POST TOTAL PROJECT	SHEET No	TOTAL
04	SF	80	12.6/13.2		

Mark Chen
REGISTERED CIVIL ENGINEER

6-6-08
PLANS APPROVAL DATE

Chi Mark Chen
No. C 40582
Exp. 03/31/09
CIVIL
REGISTERED PROFESSIONAL ENGINEER
STATE OF CALIFORNIA

The State of California or its officers or agents shall not be responsible for the accuracy or completeness of electronic copies of this plan sheet.

T.Y. LIN / MOFFATT & NICHOL
Two Harrison Street, Suite 500
San Francisco, CA 94105

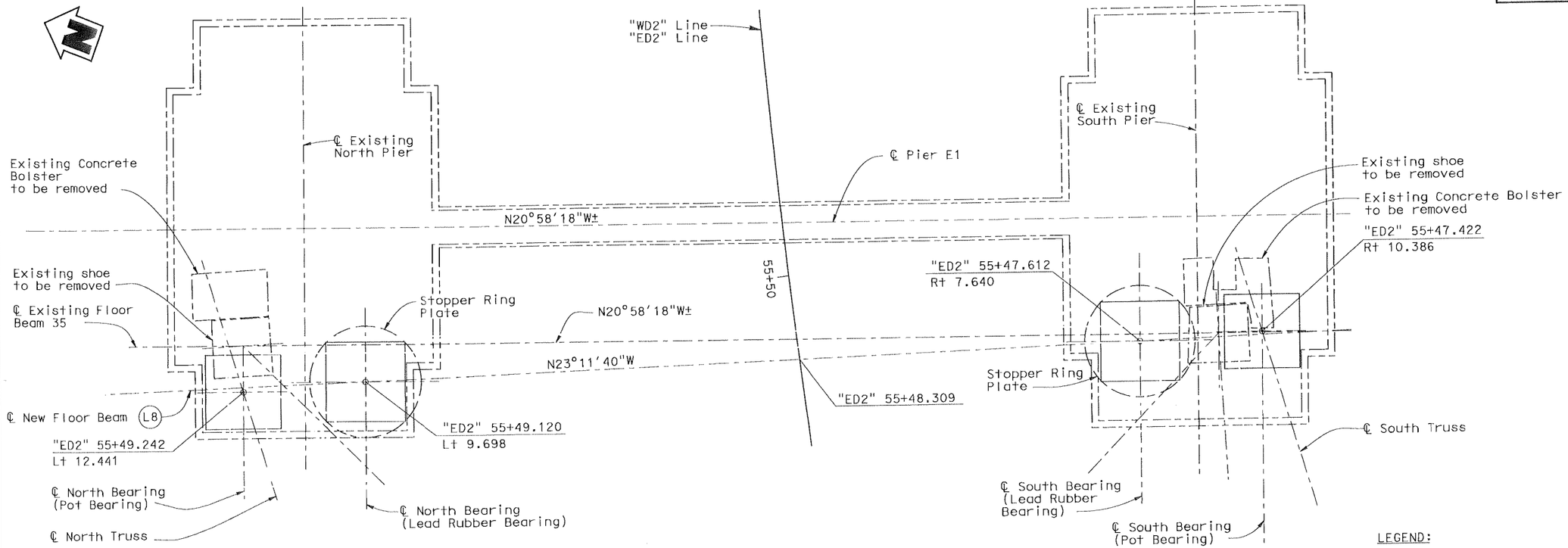

PLAN
1:50

LEGEND:

———— Indicates Existing Structure

Indicates existing truss YB4 to be rolled out, shown in approximate location

Notes:

1. The Contractor shall verify all controlling field dimensions before ordering or fabricating any material.
2. Existing concrete should be checked for soundness where new bearings are placed. Delaminated concrete shall be removed and replaced as necessary with approval of the Engineer.
3. For bearing details, see "Bearing Details" sheets.
4. For additional details, see "Support at Pier E1 Details" sheets.
5. Existing Concrete Bolsters are to be removed prior to roll-out roll-in date.

CONTRACT NO. 04-0120R4

CONTRACT CHANGE ORDER NO 149

SHEET 46 OF 55

ALL DIMENSIONS ARE IN MILLIMETERS UNLESS OTHERWISE SHOWN

SAN FRANCISCO OAKLAND BAY BRIDGE
EAST SPAN SEISMIC SAFETY PROJECT

EAST TIE-IN

SUPPORT AT PIER E1

DESIGN	BY M. Chen, C. Redfield	CHECKED S. Cheng, H. Najm	
DETAILS	BY S. Lee, P. Zhao	CHECKED A. Lee	
QUANTITIES	BY H. Nelson	CHECKED A. Lee	

PREPARED FOR THE STATE OF CALIFORNIA DEPARTMENT OF TRANSPORTATION

T. Ostrom/M. Whiteside/A. Akinsanya
DESIGN OVERSIGHT

SIGN OFF DATE

M. Sah
PROJECT ENGINEER
S. Abbas
PROJECT MANAGER

CU
EA 0120R4

BRIDGE NO. 34-0006 (TEMP)
KILOMETER POST 12.6

DISREGARD PRINTS BEARING EARLIER REVISION DATES ⟵

REVISION DATES (PRELIMINARY STAGE ONLY): 11/07/07 | 6/06/08

SHEET 21 OF 214

DESIGN DETAIL SHEET (METRIC) (REV. 3/1/98)
⊕DATE⊕ ⊕TIME⊕ Pen Table File

ORIGINAL SCALE IN MILLIMETERS FOR REDUCED PLANS 0 10 20 30 40 50 60 70 80 90 100

FILE => p:\bb\04-012001\eti\dgn\oesp01.dgn

100% PS&E

USERNAME => ALee
DATE PLOTTED => 6/6/2008
TIME PLOTTED => 3:47:28 PM
FILE => p:\bb\04-012001\eti\dgn\oesp01.dgn

DIST	COUNTY	ROUTE	KILOMETER POST TOTAL PROJECT	SHEET No	TOTAL
04	SF	80	12.6/13.2		

Mark Chen
REGISTERED CIVIL ENGINEER

6-6-08
PLANS APPROVAL DATE

REGISTERED PROFESSIONAL ENGINEER — Chi Mark Chen — No. C 40582 — Exp. 03/31/09 — CIVIL — STATE OF CALIFORNIA

The State of California or its officers or agents shall not be responsible for the accuracy or completeness of electronic copies of this plan sheet.

T.Y. LIN / MOFFATT & NICHOL
Two Harrison Street, Suite 500
San Francisco, CA 94105

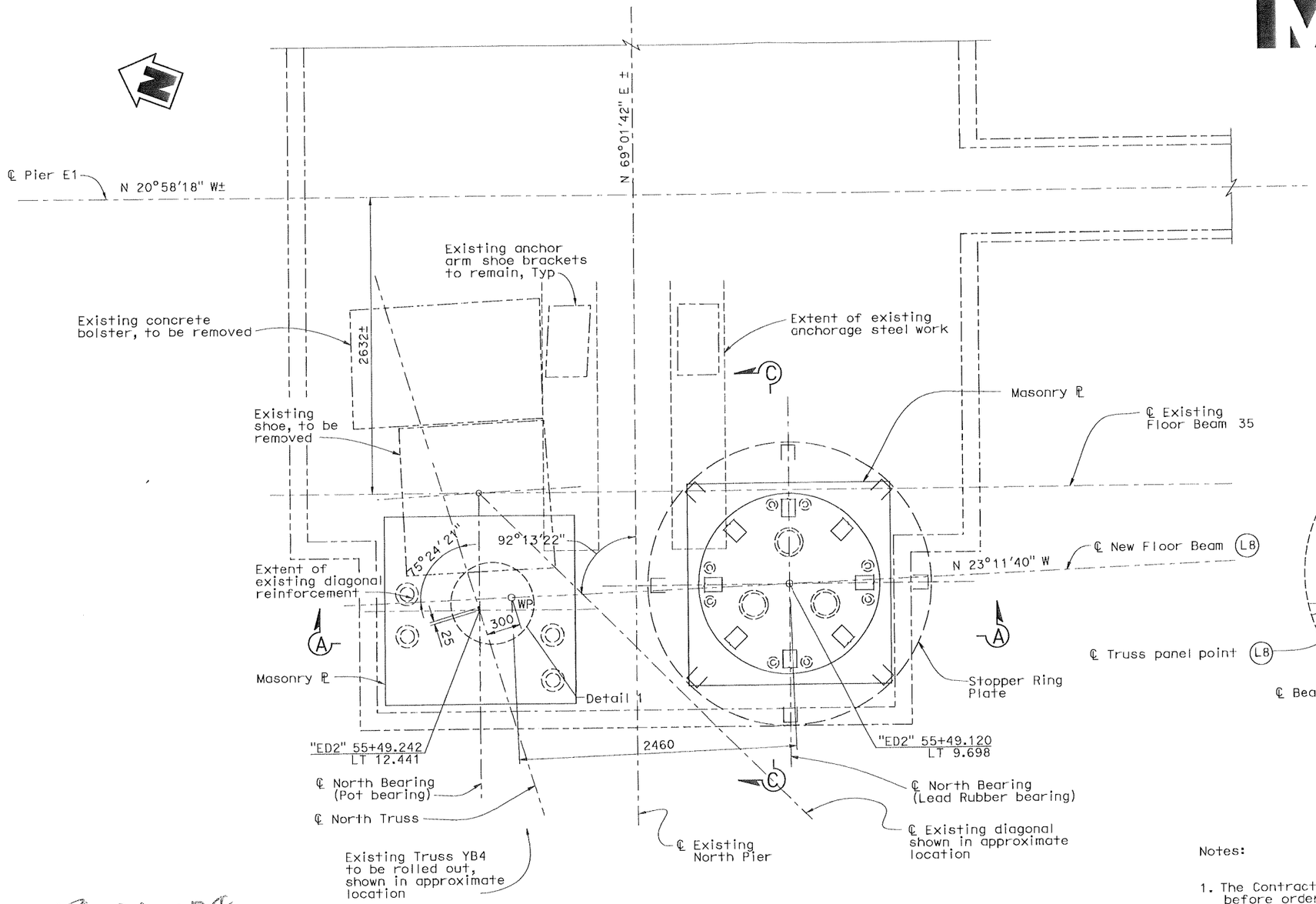

BEARINGS AT PIER E1 - NORTH TRUSS
1:20

LEGEND:

_____ Indicates Existing Structure

Indicates existing truss YB4 to be rolled out, shown in approximate location

_ _ _ _ _ Indicates approximate extent of existing anchorage steel work embedded in Pier E1

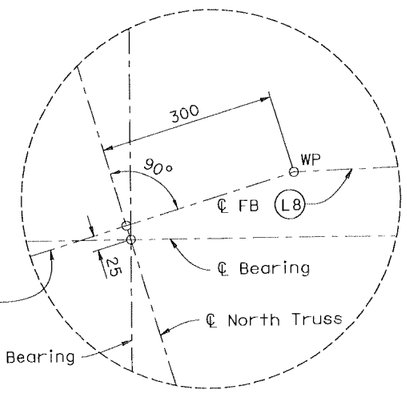

DETAIL 1
1:5

Notes:

1. The Contractor shall verify all controlling field dimensions before ordering or fabricating any material.
2. For Section A-A, see "Support at Pier E1 Details No. 3" sheet.
3. For Section C-C, see "Support at Pier E1 Details No. 2" sheet.
4. For bearing details, see "Bearing Details" sheets.
5. WP = Floor beam working point, see "Framing Plan No. 1" sheet.

CONTRACT NO. 04-0120R4

CONTRACT CHANGE ORDER NO 149

SHEET 47 OF 55

ALL DIMENSIONS ARE IN MILLIMETERS UNLESS OTHERWISE SHOWN

SAN FRANCISCO OAKLAND BAY BRIDGE
EAST SPAN SEISMIC SAFETY PROJECT

EAST TIE-IN

SUPPORT AT PIER E1 DETAILS NO. 1

DESIGN	BY M. Chen, C. Redfield	CHECKED S. Cheng, H. Najm	
DETAILS	BY S. Lee, P. Zhao	CHECKED A. Lee	
QUANTITIES	BY H. Nelson	CHECKED A. Lee	

PREPARED FOR THE STATE OF CALIFORNIA
DEPARTMENT OF TRANSPORTATION

M. Sah
PROJECT ENGINEER
S. Abbas
PROJECT MANAGER
CU
EA 0120R4

BRIDGE NO. 34-0006 (TEMP)
KILOMETER POST 12.6

DISREGARD PRINTS BEARING EARLIER REVISION DATES →
REVISION DATES (PRELIMINARY STAGE ONLY): 11/20/07 | 6/06/08

SHEET 22 OF 214

T. Ostrom/M. Whiteside/A. Akinsanya
DESIGN OVERSIGHT
SIGN OFF DATE

DESIGN DETAIL SHEET (METRIC) (REV. 3/1/98)
@DATE@ @TIME@ Pen Table File

ORIGINAL SCALE IN MILLIMETERS FOR REDUCED PLANS 0 10 20 30 40 50 60 70 80 90 100

FILE => p:\bb\04-012001\etl\dgn\aespd01.dgn

100% PS&E

USERNAME => ALee
DATE PLOTTED => 6/6/2008
TIME PLOTTED => 3:47:30 PM
FILE => p:\bb\04-012001\etl\dgn\aespd01.dgn

DIST	COUNTY	ROUTE	KILOMETER POST TOTAL PROJECT	SHEET No	TOTAL
04	SF	80	12.6/13.2		

Mark Chen
REGISTERED CIVIL ENGINEER

6-6-08
PLANS APPROVAL DATE

REGISTERED PROFESSIONAL ENGINEER — Chi Mark Chen — No. C 40582 — Exp. 03/31/09 — CIVIL — STATE OF CALIFORNIA

The State of California or its officers or agents shall not be responsible for the accuracy or completeness of electronic copies of this plan sheet.

T.Y. LIN / MOFFATT & NICHOL
Two Harrison Street, Suite 500
San Francisco, CA 94105

CONTRACT NO. 64-0120R4

CONTRACT CHANGE ORDER NO 149

SHEET 48 OF 55

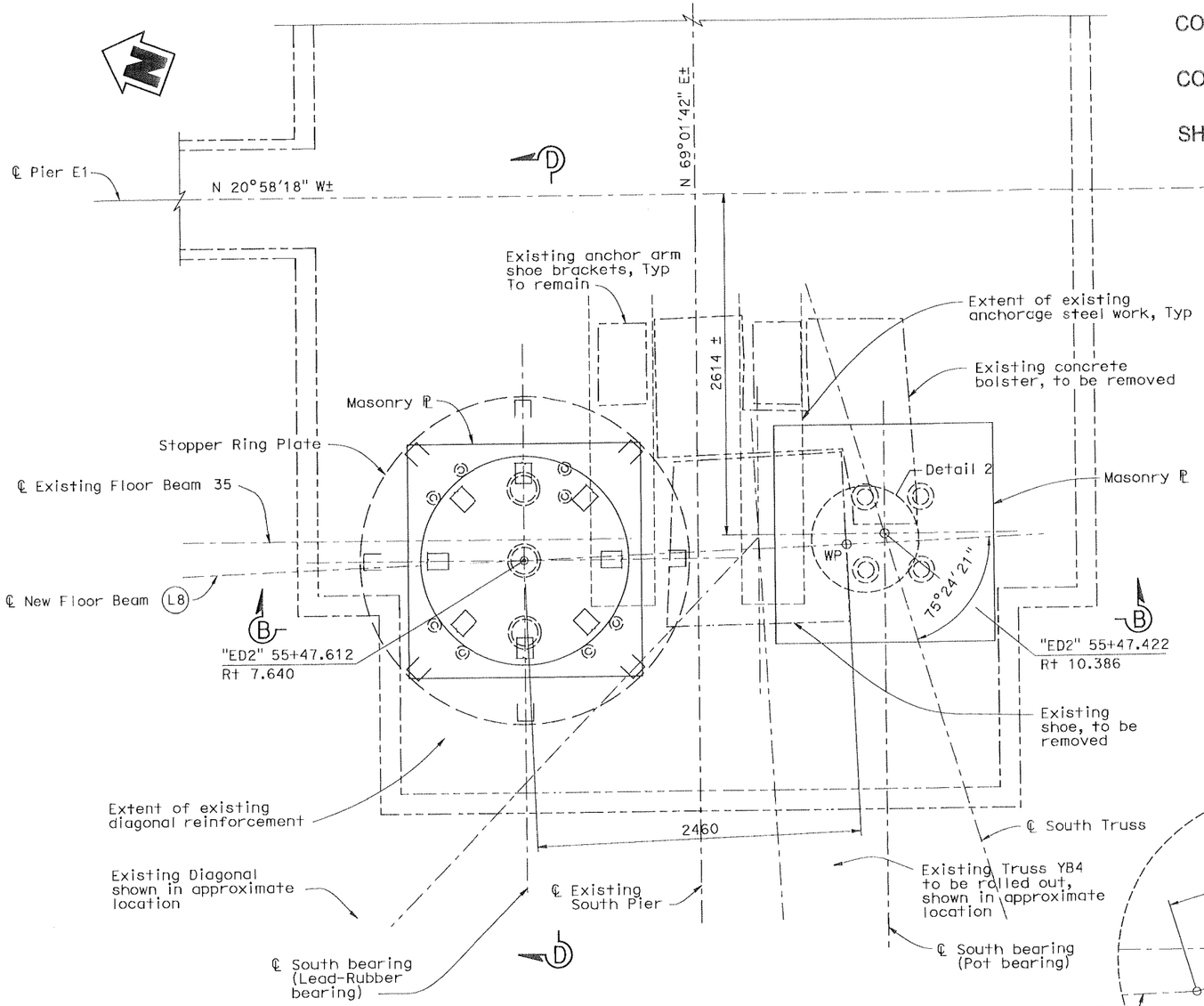

BEARINGS AT PIER E1 - SOUTH TRUSS

1:20

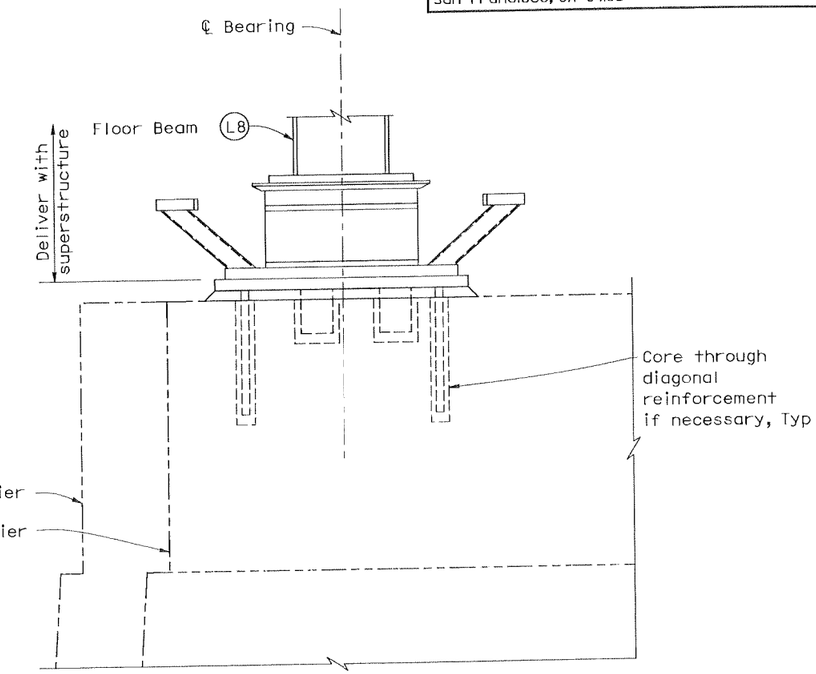

SECTION C-C at North Pier Shown
SECTION D-D at South Pier Similar

1:20

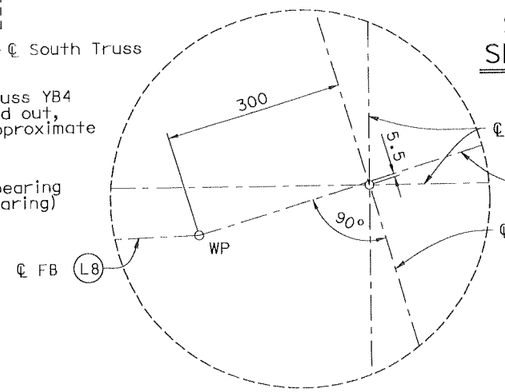

DETAIL 2

1:5

LEGEND:

- ——— Indicates Existing Structure
- ——— Indicates existing truss YB4 to be rolled out, shown in approximate location
- ——— Indicates approximate extent of existing anchorage steel work embedded in Pier E1

Notes:

1. The Contractor shall verify all controlling field dimensions before ordering or fabricating any material.
2. For Section B-B, see "Support at Pier E1 Details No. 3" sheet.
3. For bearing details, see "Bearing Details" sheets.
4. WP = Floor beam working point, see "Framing Plan No. 1" sheet.

ALL DIMENSIONS ARE IN MILLIMETERS UNLESS OTHERWISE SHOWN

100% PS&E

FILE => p:\bb\04-012001\eti\dgn\aeespd02.dgn
TIME PLOTTED => 3:47:32 PM
DATE PLOTTED => 6/6/2008
USERNAME => ALee

T. Ostrom/M. Whiteside/A. Akinsanya
DESIGN OVERSIGHT

SIGN OFF DATE

	BY	CHECKED
DESIGN	M. Chen, C. Redfield	S. Cheng, H. Najm
DETAILS	S. Lee, P. Zhao	A. Lee
QUANTITIES	H. Nelson	A. Lee

PREPARED FOR THE STATE OF CALIFORNIA DEPARTMENT OF TRANSPORTATION

M. Sah
PROJECT ENGINEER
S. Abbas
PROJECT MANAGER

CU
EA 0120R4

BRIDGE NO. 34-0006 (TEMP)
KILOMETER POST 12.6

DISREGARD PRINTS BEARING EARLIER REVISION DATES →

REVISION DATES (PRELIMINARY STAGE ONLY): 11/07/01 6/06/08

SAN FRANCISCO OAKLAND BAY BRIDGE
EAST SPAN SEISMIC SAFETY PROJECT

EAST TIE-IN

SUPPORT AT PIER E1 DETAILS NO. 2

SHEET 23 OF 214

DESIGN DETAIL SHEET (METRIC) (REV. 3/1/98)
@DATE@ @TIME@ Pen Table File

ORIGINAL SCALE IN MILLIMETERS FOR REDUCED PLANS 0 10 20 30 40 50 60 70 80 90 100

FILE => p:\bb\04-012001\eti\dgn\aeespd02.dgn

Caltrans Metric

DIST	COUNTY	ROUTE	KILOMETER POST TOTAL PROJECT	SHEET No	TOTAL
04	SF	80	12.6/13.2		

Mark Chen
REGISTERED CIVIL ENGINEER

6-6-08
PLANS APPROVAL DATE

REGISTERED PROFESSIONAL ENGINEER — Chi Mark Chen — No. C 40582 — Exp. 03/31/09 — CIVIL — STATE OF CALIFORNIA

The State of California or its officers or agents shall not be responsible for the accuracy or completeness of electronic copies of this plan sheet.

T.Y. LIN / MOFFATT & NICHOL
Two Harrison Street, Suite 500
San Francisco, CA 94105

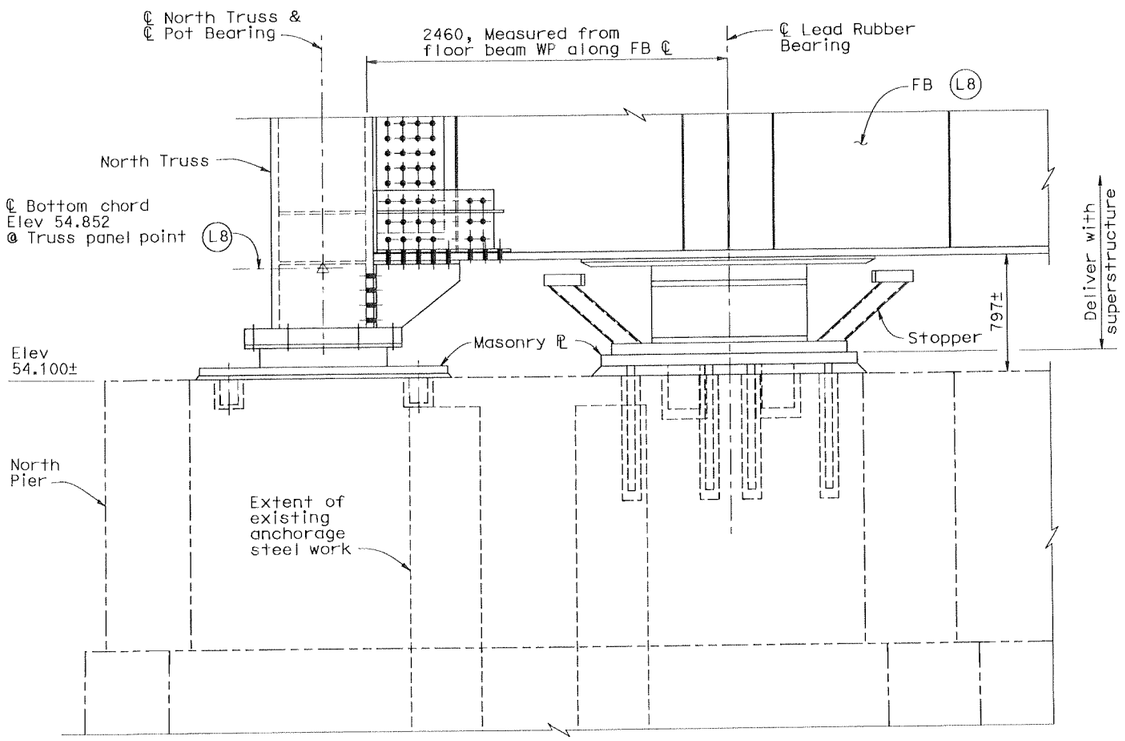

SECTION A-A
1:20

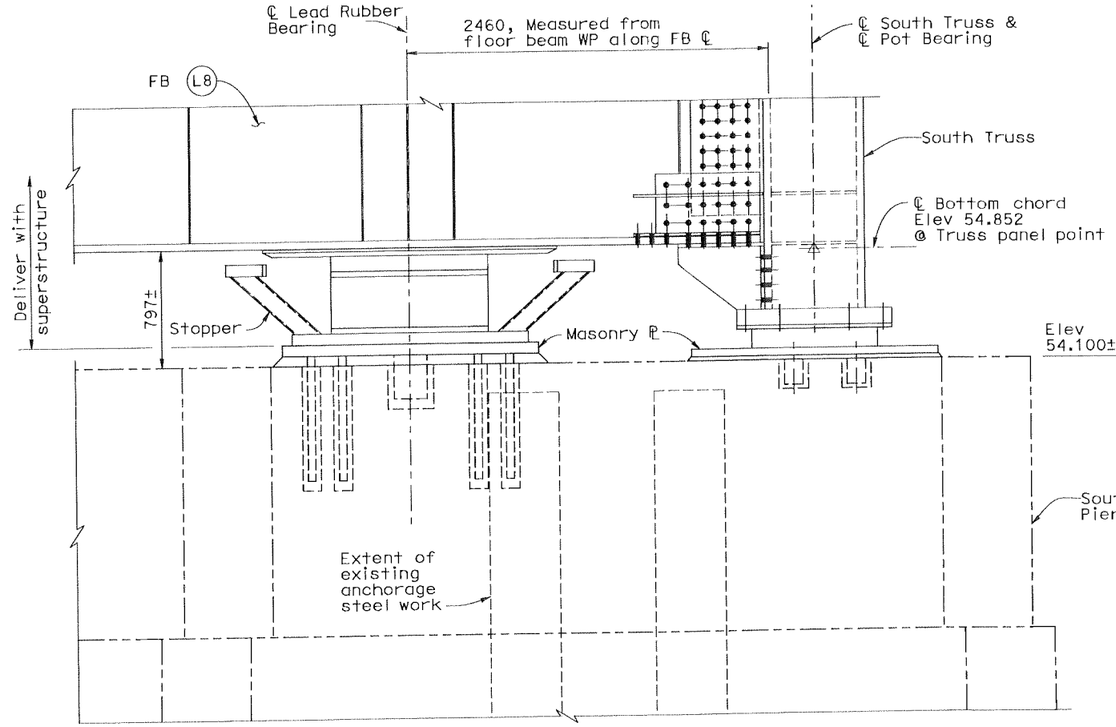

SECTION B-B
1:20

LEGEND:

_____ Indicates Existing Structure

CONTRACT NO. 04-0120R4

CONTRACT CHANGE ORDER NO 149

SHEET 49 OF 55

Notes:

1. The Contractor shall verify all controlling field dimensions before ordering or fabricating any material.
2. For bearing and stopper details, see "Bearing Details" sheets.

100% PS&E

FILE => p:\bb\04-012001\eti\dgn\oespd03.dgn
TIME PLOTTED => 3:47:35 PM
DATE PLOTTED => 6/6/2008
USERNAME => ALee

ALL DIMENSIONS ARE IN MILLIMETERS UNLESS OTHERWISE SHOWN

SAN FRANCISCO OAKLAND BAY BRIDGE
EAST SPAN SEISMIC SAFETY PROJECT

EAST TIE-IN

SUPPORT AT PIER E1 DETAILS NO. 3

	BY	CHECKED
DESIGN	M. Chen, C. Redfield	S. Cheng, H. Najm
DETAILS	S. Lee, F. Zhao	A. Lee
QUANTITIES	H. Nelson	A. Lee

T. Ostrom/M. Whiteside/A. Akinsanya
DESIGN OVERSIGHT

SIGN OFF DATE

PREPARED FOR THE STATE OF CALIFORNIA
DEPARTMENT OF TRANSPORTATION

M. Sah
PROJECT ENGINEER
S. Abbas
PROJECT MANAGER

CU
EA 0120R4

BRIDGE NO. 34-0006 (TEMP)
KILOMETER POST 12.6

DISREGARD PRINTS BEARING EARLIER REVISION DATES →

REVISION DATES (PRELIMINARY STAGE ONLY): 11/09/07 | 6/06/08

SHEET 24 OF 214

DESIGN DETAIL SHEET (METRIC) (REV. 3/1/98)
@DATE@ @TIME@ Pen Table File

ORIGINAL SCALE IN MILLIMETERS FOR REDUCED PLANS 0 10 20 30 40 50 60 70 80 90 100

FILE => p:\bb\04-012001\eti\dgn\oespd03.dgn

BEARING PERFORMANCE CRITERIA TABLE

PIER E1	Value	Units
Quantity	2	(-)
Effective lateral stiffness at DLS	4.2	kN/mm
Energy dissipation per cycle at DLS displacement	780	kN-m
Lateral displacement under maximum non-seismic force	75	mm

DESIGN LOADS & DISPLACEMENTS

PIER E1	Value	Units
Vertical dead load	0	kN
Vertical live load	0	kN
Vertical seismic live load	0	kN
Vertical seismic load	0	kN
Maximum vertical load combination	0	kN
Minimum vertical load combination	0	kN
Lateral non-seismic force	300	kN
Lateral thermal displacemnt	0	mm
Lateral seismic displacement under DEE	200	mm
Lateral seismic displacement under DLS	450	mm

Notes:

1. The Contractor shall verify all controlling field dimensions before ordering or fabricating material.
2. The Contractor shall develop for the Engineer's approval a written grouting plan that will assure grout completely fills all voids under the masonry plate and in and around the pintles. The Contractor to provide air venting to underside of masonry plate as part of grouting plan to prevent air pocketing during grouting. Smooth grooves 6 mm deep may be made on underside of masonry plate. Vents shall also be provided at the top of pipe pinteis to prevent air pockets within the pipes. See Special Provision for other grouting plan requirements.
3. Dimensions to be designed/approved by bearing Manufacturer.
4. For stopper details and cored hole locations, see "Bearing Details No. 2" sheet.
5. LRB bearing to be supplied with temporary clamping device to prevent distortion during transport and erection. To be removed after installation is complete.
6. Leveling screws may be used to prevent vertical movement of LRB during grout installation and curing. Must be capable of supporting minimum vertical service load of 750kN per LRB.

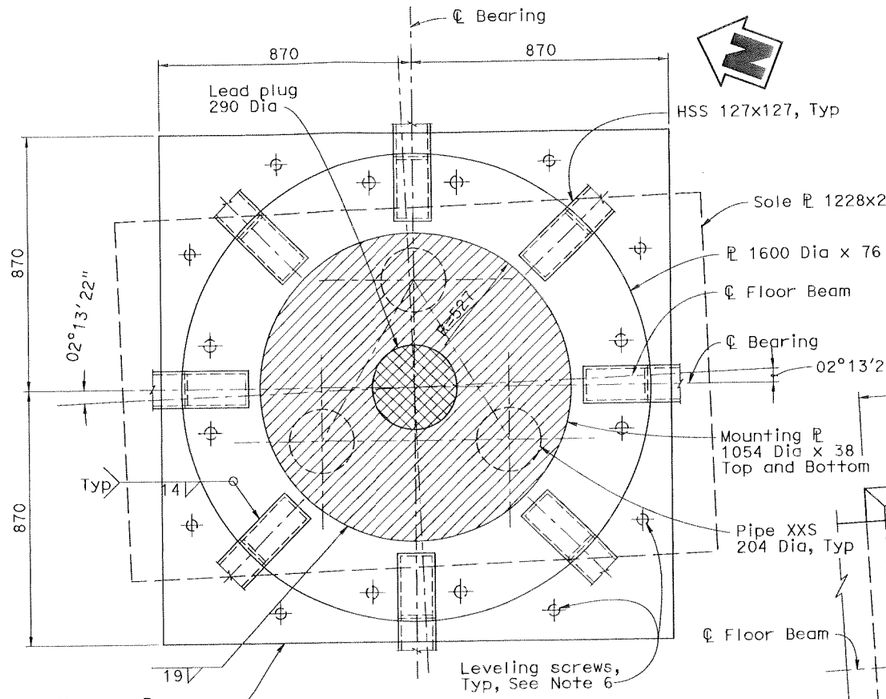

PLAN-SECTION A-A

1:10

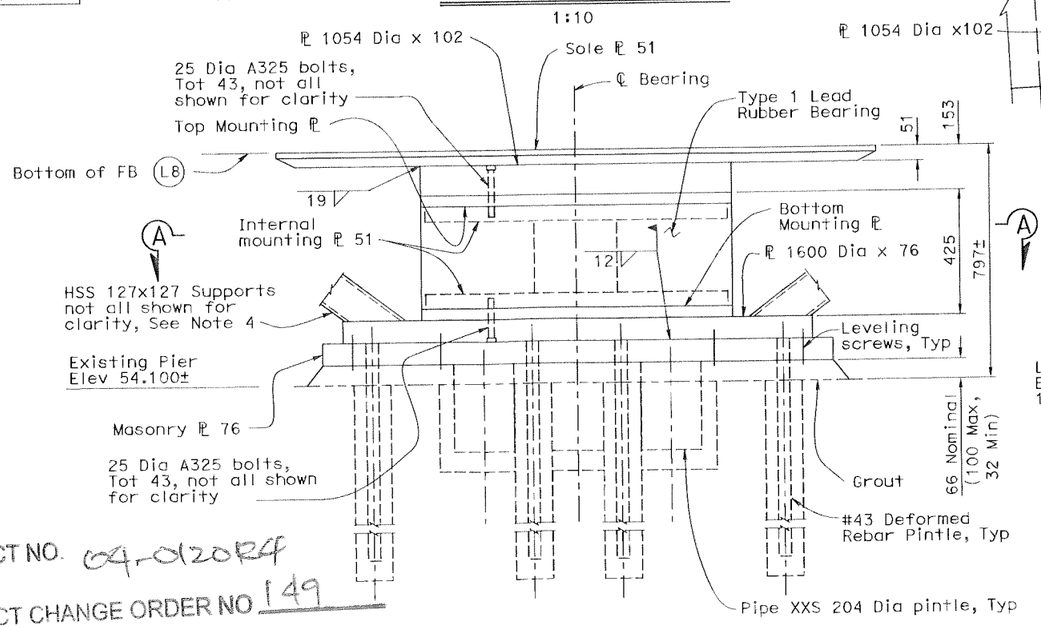

ELEVATION - PIER E1

1:10

(North Bearing shown, South Bearing similar) ALL DIMENSIONS ARE IN MILLIMETERS UNLESS OTHERWISE SHOWN

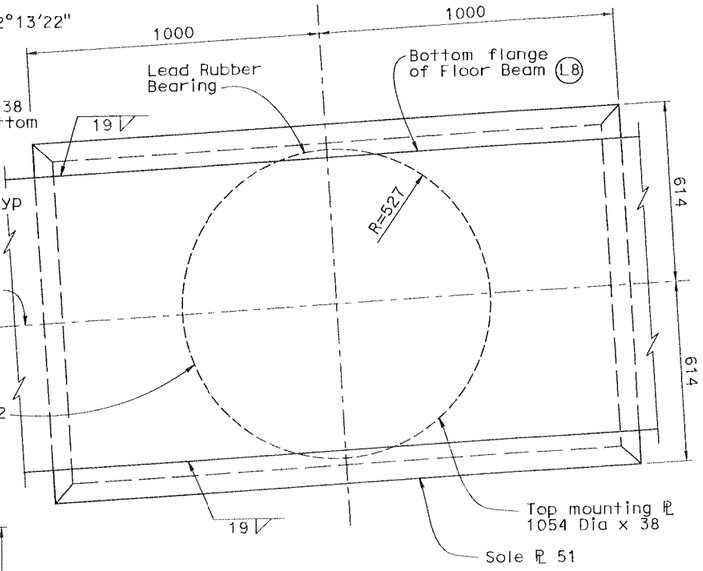

PLAN-SOLE PLATE

1:10

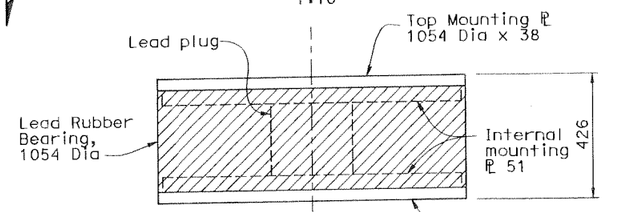

ELEVATION

1:10

TYPE 1 LEAD RUBBER BEARING DETAIL

CONTRACT NO. 04-0120R4

CONTRACT CHANGE ORDER NO 149

SHEET 50 OF 55

Caltrans Metric

DIST	COUNTY	ROUTE	KILOMETER POST TOTAL PROJECT	SHEET No	TOTAL
04	SF	80	12.6/13.2		

Charles Redfield
REGISTERED CIVIL ENGINEER

6-6-08
PLANS APPROVAL DATE

REGISTERED PROFESSIONAL ENGINEER — Charles Redfield, No. C 27605, Exp. 12/31/09, CIVIL, STATE OF CALIFORNIA

The State of California or its officers or agents shall not be responsible for the accuracy or completeness of electronic copies of this plan sheet.

T.Y. LIN / MOFFATT & NICHOL
Two Harrison Street, Suite 500
San Francisco, CA 94105

100% PS&E

FILE => p:\bb\04-012001\eti\dgn\akbrgd01.dgn
TIME PLOTTED => 3:47:38 PM
DATE PLOTTED => 6/6/2008
USERNAME => ALee

DESIGN	C. Redfield, J. Stanton	S. Cheng, I. Aiken	PREPARED FOR THE STATE OF CALIFORNIA DEPARTMENT OF TRANSPORTATION	M. Sah, PROJECT ENGINEER; S. Abbas, PROJECT MANAGER
DETAILS	S. Lee, P. Zhao	A. Lee		
QUANTITIES	H. Nelson	A. Lee		

T. Ostrom/M. Whiteside/A. Akinsanya
DESIGN OVERSIGHT

SIGN OFF DATE

DESIGN DETAIL SHEET (METRIC) (REV. 3/1/98)
©DATE© ©TIME© Pen Table File

ORIGINAL SCALE IN MILLIMETERS FOR REDUCED PLANS 0 10 20 30 40 50 60 70 80 90 100

CU EA 0120R4

FILE => p:\bb\04-012001\eti\dgn\akbrgd01.dgn

BRIDGE NO. 34-0006 (TEMP)
KILOMETER POST 12.6

DISREGARD PRINTS BEARING EARLIER REVISION DATES

REVISION DATES (PRELIMINARY STAGE ONLY): 11/05/03, 6/06/06

SHEET 113 OF 214

SAN FRANCISCO OAKLAND BAY BRIDGE
EAST SPAN SEISMIC SAFETY PROJECT

EAST TIE-IN

BEARING DETAILS NO. 1

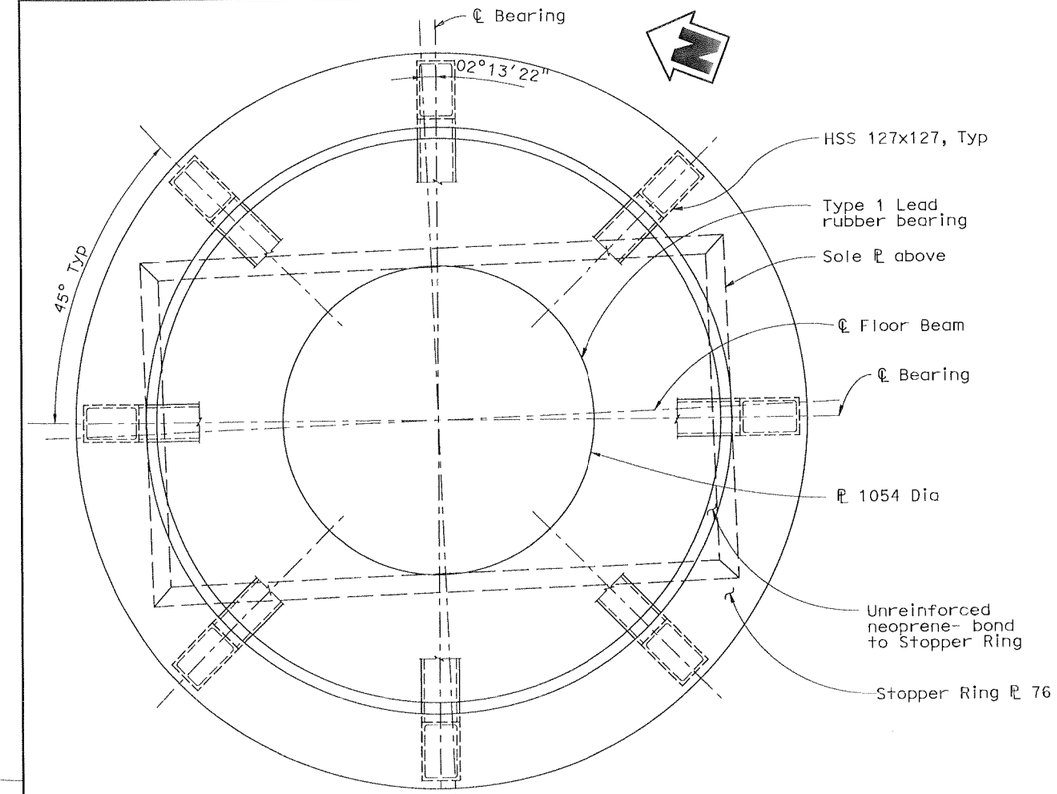

PLAN - STOPPER RING
1:10

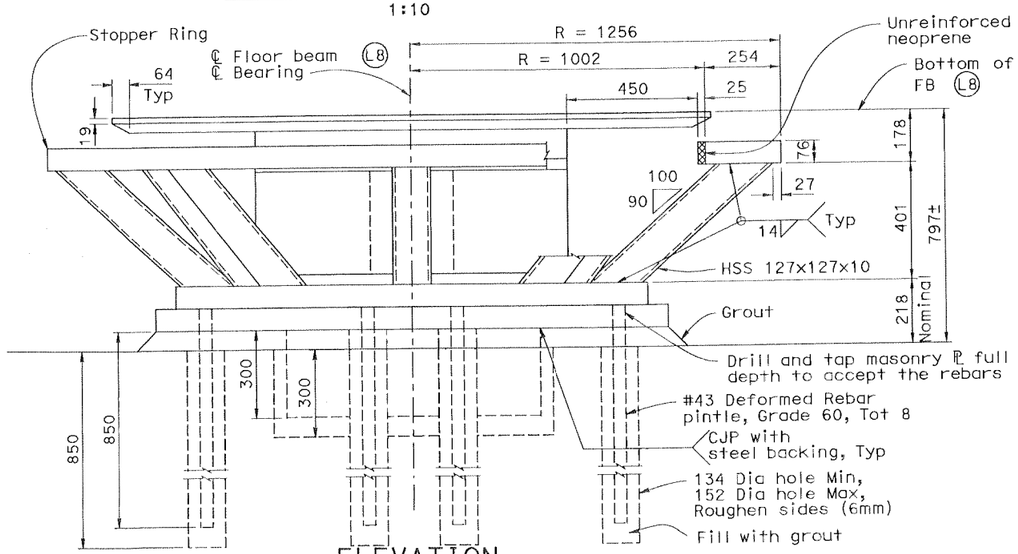

ELEVATION
1:10
(North Bearing Shown, South Bearing Similar)

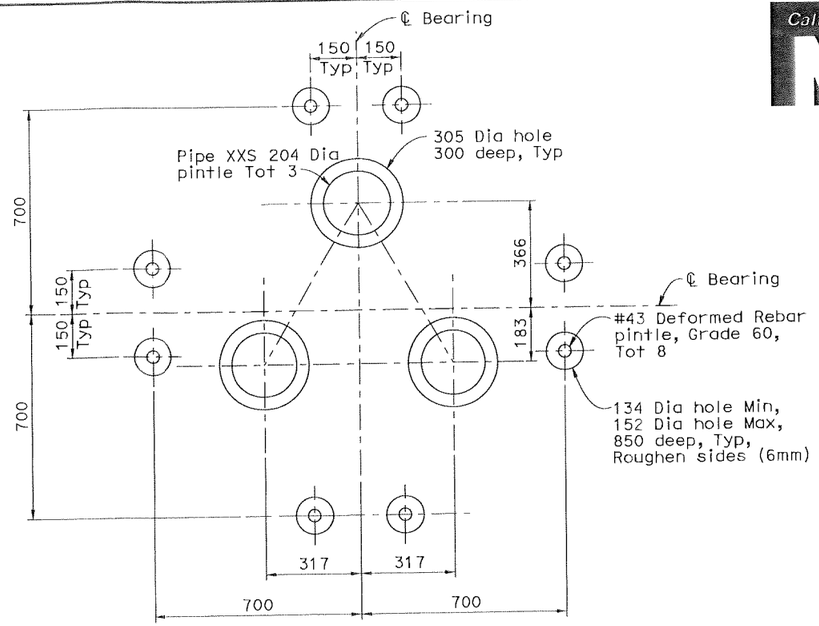

PLAN-CORED HOLES
(North Bearing)
1:10

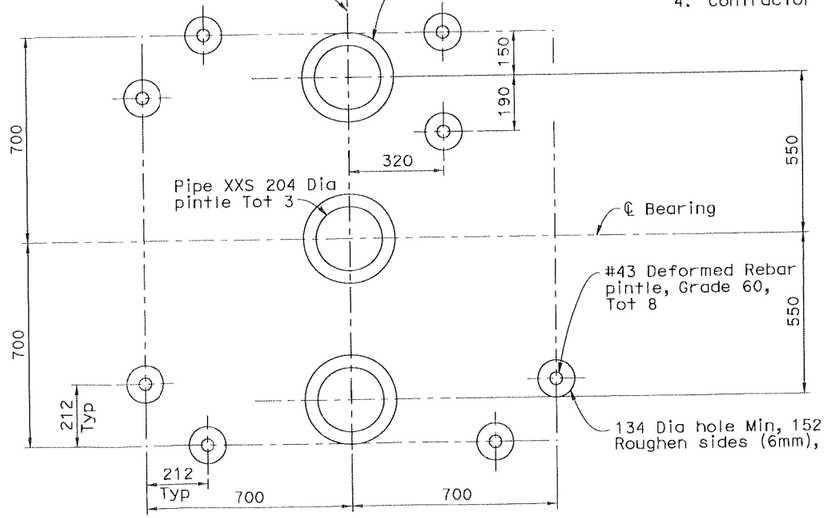

PLAN-CORED HOLES
(South Bearing)
1:10

Notes :

1. The Contractor shall verify all controlling field dimensions before ordering or fabricating any material.
2. For additional notes, see "Bearing Details No.1" sheet.
3. Cored hole locations may be adjusted, subject to the approval of the Engineer.
4. Contractor to provide air bleed holes in pintles.

DIST	COUNTY	ROUTE	KILOMETER POST TOTAL PROJECT	SHEET No	TOTAL
04	SF	80	12.6/13.2		

REGISTERED CIVIL ENGINEER

6-6-08
PLANS APPROVAL DATE

Richard V. Nutt, No. C 20665, Exp. 9/30/09, CIVIL, REGISTERED PROFESSIONAL ENGINEER, STATE OF CALIFORNIA

The State of California or its officers or agents shall not be responsible for the accuracy or completeness of electronic copies of this plan sheet.

T.Y. LIN / MOFFATT & NICHOL
Two Harrison Street, Suite 500
San Francisco, CA 94105

CONTRACT NO. 04-0120R4

CONTRACT CHANGE ORDER NO 149

SHEET 51 OF 55

100% PS&E

FILE => p:\bb\04-012001\eti\dgn\akbrgd02.dgn
USERNAME => ALee
DATE PLOTTED => 6/6/2008
TIME PLOTTED => 3:47:39 PM

ALL DIMENSIONS ARE IN MILLIMETERS UNLESS OTHERWISE SHOWN

SAN FRANCISCO OAKLAND BAY BRIDGE
EAST SPAN SEISMIC SAFETY PROJECT

EAST TIE-IN

BEARING DETAILS NO. 2

DESIGN	R. Nutt, C. Redfield	CHECKED	S. Cheng, W. He
DETAILS	S. Lee, P. Zhao	CHECKED	A. Lee
QUANTITIES	H. Nelson	CHECKED	A. Lee

PREPARED FOR THE STATE OF CALIFORNIA DEPARTMENT OF TRANSPORTATION

T. Ostrom/M. Whiteside/A. Akinsanya
DESIGN OVERSIGHT

SIGN OFF DATE

M. Sah
PROJECT ENGINEER
S. Abbas
PROJECT MANAGER

CU
EA 0120R4

BRIDGE NO. 34-0006 (TEMP)
KILOMETER POST 12.6

DISREGARD PRINTS BEARING EARLIER REVISION DATES

REVISION DATES (PRELIMINARY STAGE ONLY): 11/05/07 6/06/08

SHEET 114 OF 214

DESIGN DETAIL SHEET (METRIC) (REV. 3/1/98)
©DATE© ©TIME© Pen Table File

ORIGINAL SCALE IN MILLIMETERS FOR REDUCED PLANS 0 10 20 30 40 50 60 70 80 90 100

FILE => p:\bb\04-012001\eti\dgn\akbrgd02.dgn

DIST	COUNTY	ROUTE	KILOMETER POST TOTAL PROJECT	SHEET No	TOTAL
04	SF	80	12.6/13.2		

REGISTERED CIVIL ENGINEER

6-6-08
PLANS APPROVAL DATE

Charles Redfield, No. C 27605, Exp. 12/31/09, CIVIL, STATE OF CALIFORNIA

The State of California or its officers or agents shall not be responsible for the accuracy or completeness of electronic copies of this plan sheet.

T.Y. LIN / MOFFATT & NICHOL
Two Harrison Street, Suite 500
San Francisco, CA 94105

CONTRACT NO. 04-0120R4
CONTRACT CHANGE ORDER NO 149
SHEET 52 OF 55

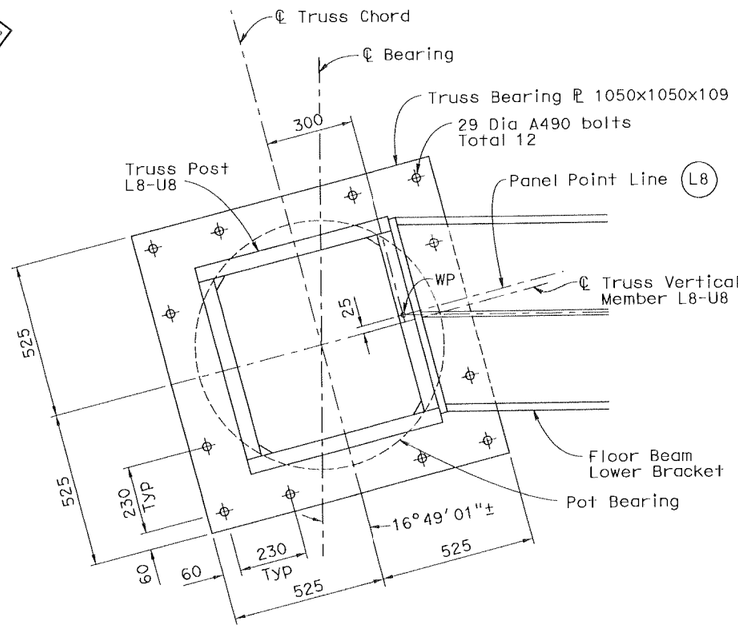

PLAN (North Bearing shown, South Bearing similar)
1:10

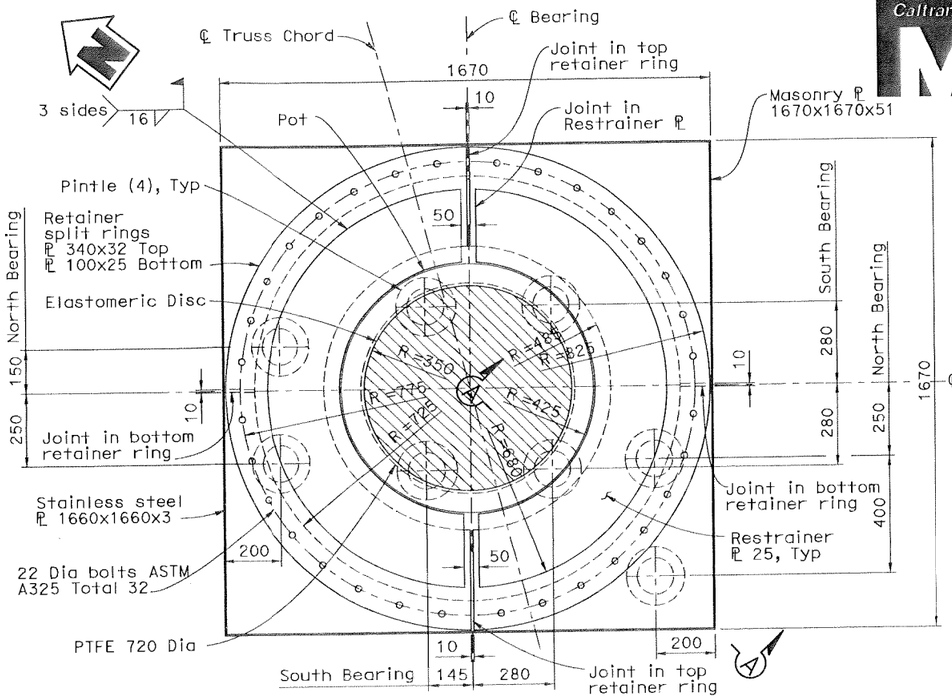

POT BEARING TABLE

Bearing Location	Quantity	Design loads (kN)				Design Movements	
		Service		Factored		Horizontal	Rotation
		Vertical	Horizontal	Vertical	Horizontal	(mm)	(Radians)
Pier E1 (North & South)	2	9600	-	14200	-	450	0.02

Notes:

1. Pot bearing to be supplied with temporary clamping device to prevent separation of components during transport and erection. To be removed after installation is complete.
2. Cored hole location may be adjusted, subject to the approval of the Engineer.
3. The Contractor shall develop for the Engineer approval a written plan that will assure grout completely fills all voids and around the pinties.

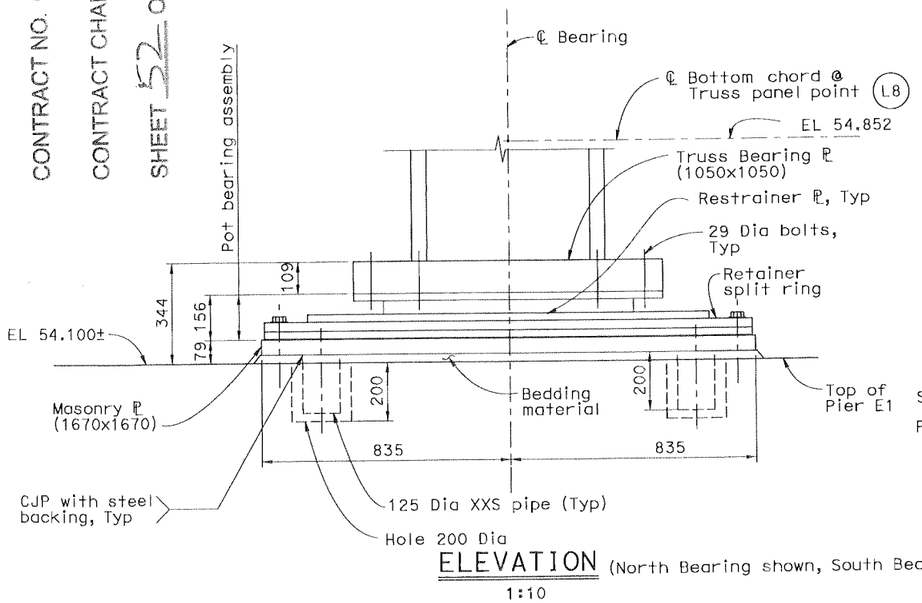

ELEVATION (North Bearing shown, South Bearing similar)
1:10

MASONRY PLATE

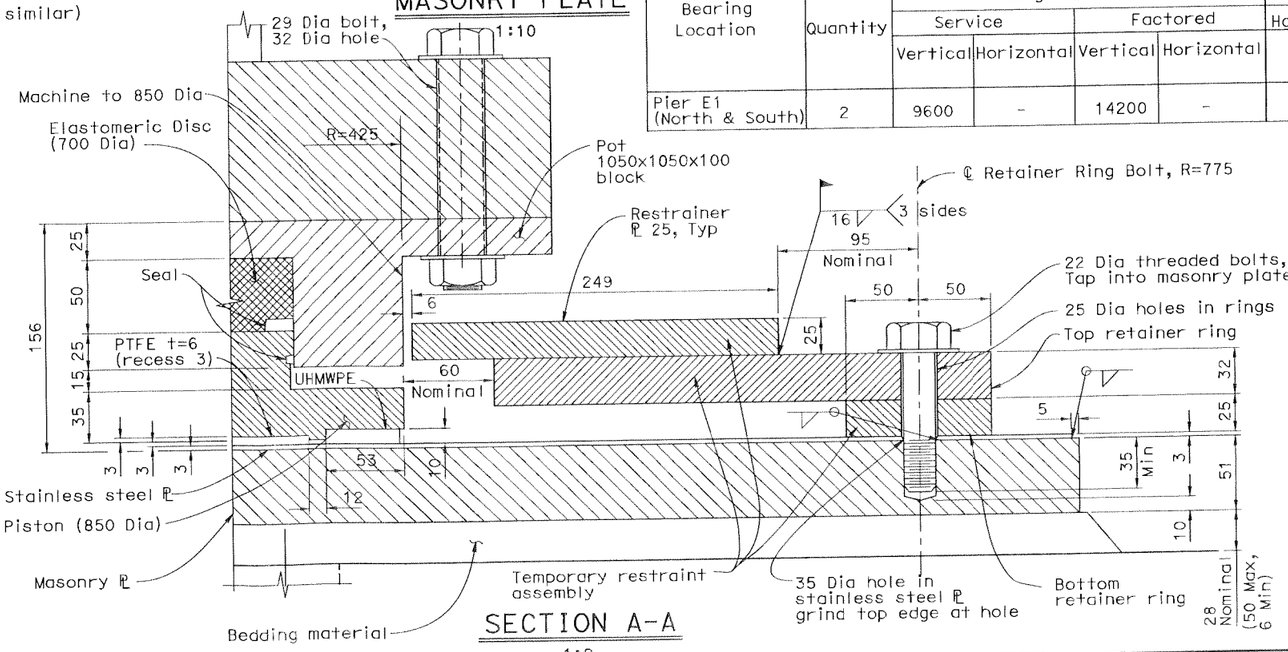

SECTION A-A
1:2

ALL DIMENSIONS ARE IN MILLIMETERS UNLESS OTHERWISE SHOWN

SAN FRANCISCO OAKLAND BAY BRIDGE
EAST SPAN SEISMIC SAFETY PROJECT

EAST TIE-IN

BEARING DETAILS NO. 3

T. Ostrom/M. Whiteside/A. Akinsanya, DESIGN OVERSIGHT	DESIGN	BY C. Redfield, J. Stanton	CHECKED S. Cheng, I.Aiken
SIGN OFF DATE	DETAILS	BY S. Lee, P. Zhao	CHECKED A. Lee
	QUANTITIES	BY H. Nelson	CHECKED A. Lee

PREPARED FOR THE STATE OF CALIFORNIA
DEPARTMENT OF TRANSPORTATION

M. Sah, PROJECT ENGINEER
S. Abbas, PROJECT MANAGER

BRIDGE NO. 34-0006 (TEMP)
KILOMETER POST 12.6

CU EA 0120R4

DISREGARD PRINTS BEARING EARLIER REVISION DATES

REVISION DATES (PRELIMINARY STAGE ONLY): 11/05/07 6/06/08

SHEET 114A OF 214

DESIGN DETAIL SHEET (METRIC) (REV. 3/1/98)
@DATE@ @TIME@ Pen Table File

ORIGINAL SCALE IN MILLIMETERS FOR REDUCED PLANS 0 10 20 30 40 50 60 70 80 90 100

FILE => p:\bb\04-012001\eti\dgn\akbrgd03.dgn

100% PS&E

USERNAME => A.Lee
DATE PLOTTED => 6/6/2008
TIME PLOTTED => 3:47:42 PM
FILE => p:\bb\04-012001\eti\dgn\akbrgd03.dgn

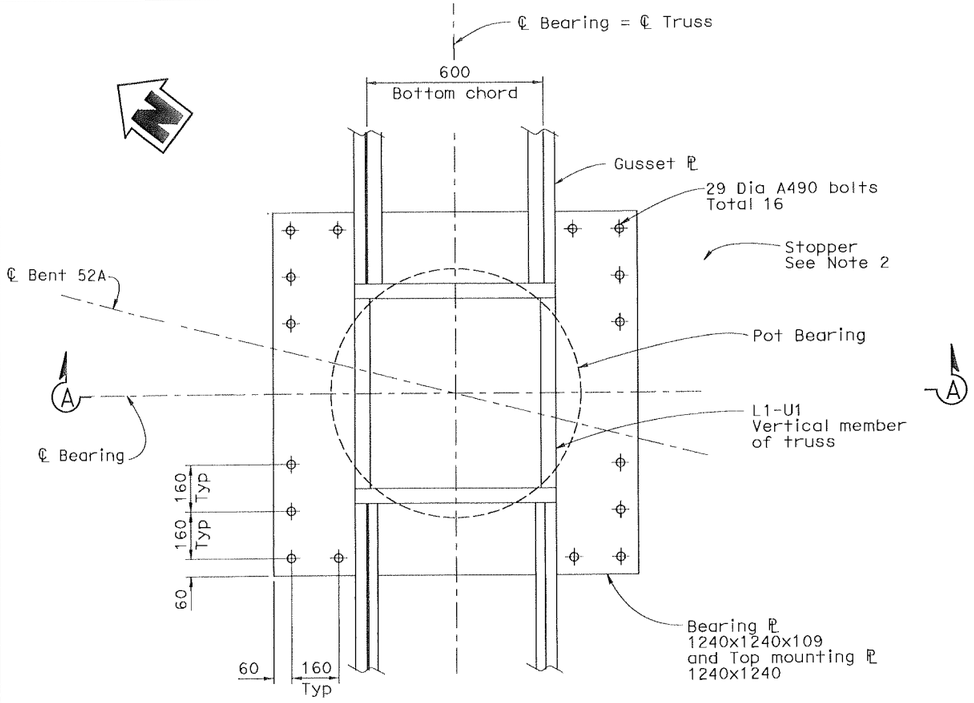

PLAN (North Bearing shown, South Bearing similar)

1:10

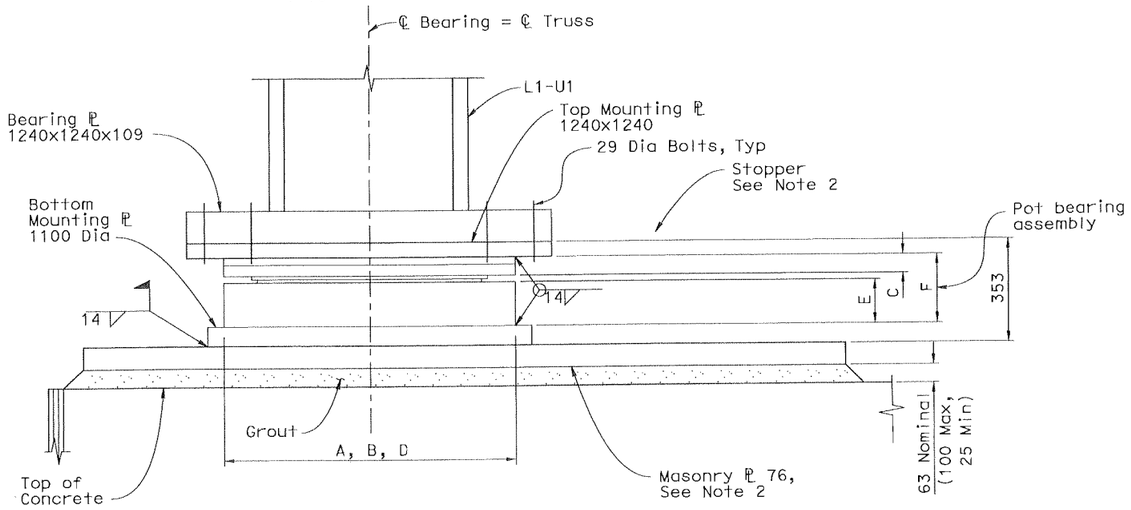

SECTION A-A

1:10

Anchor rods not shown for clarity

POT BEARING TABLE

Bearing Location	Bearing Type	Quantity	Design loads (kN)				Design Movements		Dimensions *					
			Service		Factored		Horizontal (mm)	Rotation (Radians)	A (mm)	B (mm)	C (mm)	D (mm)	E (mm)	F (mm)
			Vertical	Horizontal	Vertical	Horizontal								
BENT 52A (North & South)	PF 2750-Fixed	2	11700	1900	17200	3200	-	0.02	1041	1041	38	1041	175	235

* The dimension shown are for D.S. Brown bearings, equivalent bearings can be used from other manufacturer on approval by the Engineer.

Caltrans Metric

DIST	COUNTY	ROUTE	KILOMETER POST TOTAL PROJECT	SHEET No	TOTAL
04	SF	80	12.6/13.2		

REGISTERED CIVIL ENGINEER

6-6-08
PLANS APPROVAL DATE

REGISTERED PROFESSIONAL ENGINEER — Charles Redfield — No. C 27605 — Exp. 12/31/09 — CIVIL — STATE OF CALIFORNIA

The State of California or its officers or agents shall not be responsible for the accuracy or completeness of electronic copies of this plan sheet.

T.Y. LIN / MOFFATT & NICHOL
Two Harrison Street, Suite 500
San Francisco, CA 94105

CONTRACT NO. 04-0120R4

CONTRACT CHANGE ORDER NO 149

SHEET 53 OF 55

Notes:

1. The Contractor shall verify all controlling field dimensions before ordering or fabricating any material.
2. For masonry PL and stopper details, see "Bent Cap Details No. 4" sheet.
3. Pot bearing to be supplied with temporary clamping device to prevent separation of components during transport and erection. To be removed after installation is complete.

ALL DIMENSIONS ARE IN MILLIMETERS UNLESS OTHERWISE SHOWN

SAN FRANCISCO OAKLAND BAY BRIDGE
EAST SPAN SEISMIC SAFETY PROJECT

EAST TIE-IN

BEARING DETAILS NO. 4

DESIGN	C. Redfield, J. Stanton	S. Cheng, I. Aiken	
DETAILS	S. Lee, P. Zhao	A. Lee	
QUANTITIES	H. Nelson	A. Lee	

T. Ostrom/M. Whiteside/A. Akinsanya
DESIGN OVERSIGHT

SIGN OFF DATE

PREPARED FOR THE STATE OF CALIFORNIA
DEPARTMENT OF TRANSPORTATION

M. Sah
PROJECT ENGINEER

S. Abbas
PROJECT MANAGER

CU
EA 0120R4

BRIDGE NO. 34-0006 (TEMP)
KILOMETER POST 12.6

DISREGARD PRINTS BEARING EARLIER REVISION DATES

REVISION DATES (PRELIMINARY STAGE ONLY): 11/05/07 6/06/08

SHEET 114B OF 214

DESIGN DETAIL SHEET (METRIC) (REV. 3/1/98)
©DATE© ©TIME© Pen Table File

ORIGINAL SCALE IN MILLIMETERS FOR REDUCED PLANS 0 10 20 30 40 50 60 70 80 90 100

100% PS&E

FILE => p:\bb\04-012001\etl\dgn\akbrgd04.dgn
TIME PLOTTED => 3:47:44 PM
DATE PLOTTED => 6/6/2008
USERNAME => ALee

SUGGESTED INSTALLATION SEQUENCE - POT BEARINGS AT PIER E1

GENERAL:

1. The Contractor shall develop and demonstrate an installation plan, including a grouting plan, for Engineer approval prior to beginning any work that could be affected by the plan. See the Special Provisions for further requirements.
2. The holes for the pintles are to be cored into the top of Pier E1 prior to roll-out roll-in date.
3. The pot bearing assembly including the lower piston will be attached to the new ETI truss prior to moving the truss.
4. After existing Truss YB4 has moved away, remove bearing shoes and cut all anchor bolts to top of concrete level and prepare concrete surface for the new bearings.
5. Remove any loose or spalled concrete in the plan area of the bearings.

SUGGESTED INSTALLATION STEPS:

1. Position and install bearing masonry plate according to approved installation plan. The designers envision the following procedure:
   a. Place the masonry plate onto the concrete complete with the fixed retainer ring. Adjust it for location in plan. Level the masonry plate using leveling bolts. See the Special Provisions for masonry plate installation tolerances.
   b. Drill into the concrete for locating pins at minimum two locations. Set locating pins into the drilled holes (light driving fit).
   c. Set plastic plugs in holes drilled into the concrete around the perimeter of the masonry plate. Set screws into the plug, set screw tops to 4mm above the underside of the masonry plate to establish screed level for the bedding material.
   d. Build a dam around the perimeter of the masonry plate.
   e. Remove the masonry plate temporarily.
   f. Mix pintle filling material: material to be suitable for large volumes.
   g. Partally fill the pintle holes leaving room for the displacement volume of the pintles.
   h. Mix bedding material: trowelable consistency.
   i. Place bedding material up to height of screws (Item 1c above). Screed off bedding material to level.
   j. Re-install the masonry plate using the pins (Item 1b above) as guides. Force masonry plate down to displace bedding material until leveling screws attain contact with the top of pier.
2. Bring the new ETI truss into position with the remaining bearing components attached to the truss.
3. Position the new ETI truss at the correct plan location and lower it at Bent 52A to set it on its bearings at the west end (see suggested installation sequence for pot bearings at Bent 52A on "Bearing Details No. 6" sheet).
4. Lower the east end of the new ETI truss until the pot bearings on Pier E1 are approximately 10mm from contact with the masonry plates.
5. Allow the bedding material to attain a minimum cube strength of 20 MPa. The strength of the material in the pintle holes is not an issue at this time.
6. Set the east end of the new ETI truss down onto the pot bearings. Maintain the transport gear in contact with the truss to provide north-south restraint until the bearings have been locked up. Note: The pot bearing will move eastward approxmately 35 mm in the process.
7. Install the temporary restrainer plates on the pot bearings and weld these to the fixed retainer ring.
8. Release the transport gear.

Caltrans Metric

DIST	COUNTY	ROUTE	KILOMETER POST TOTAL PROJECT	SHEET No	TOTAL
04	SF	80	12.6/13.2		

Sajid Abbas
REGISTERED CIVIL ENGINEER

6-6-08
PLANS APPROVAL DATE

REGISTERED PROFESSIONAL ENGINEER — Sajid Abbas — No. C 055274 — Exp. 12/31/09 — CIVIL — STATE OF CALIFORNIA

The State of California or its officers or agents shall not be responsible for the accuracy or completeness of electronic copies of this plan sheet.

T.Y. LIN / MOFFATT & NICHOL
Two Harrison Street, Suite 500
San Francisco, CA 94105

CONTRACT NO. 64-0120R4

CONTRACT CHANGE ORDER NO 149

SHEET 54 OF 55

SUGGESTED INSTALLATION SEQUENCE - LEAD RUBBER BEARINGS AT PIER E1

GENERAL:

1. The Contractor shall develop and demonstrate an installation plan, including a grouting plan, for Engineer approval prior to beginning any work that could be affected by the plan. See the Special Provisions for further requirements.
2. The holes for the pintles are to be cored into the top of Pier E1 prior to roll-out roll-in date.
3. The complete bearing, with the exception of the masonry plate will be attached to the new ETI truss prior to moving the truss.
4. The lead rubber bearings will eventually resist all lateral loadings but will not carry vertical loads. Until they are completely installed, lateral loadings will be resisted by temporarily locking the pot bearings at pier E1.
5. Lead rubber bearings to be vertically supported to top of pier E1 to prevent vertical displacements due to live load during grouting and grout curing of these bearings.

SUGGESTED INSTALLATION STEPS:

1. Core holes in pier top for the pintles. See the Special Provisions for coring tolerances.
2. Roll out existing YB4 truss.
3. Set the masonry plates into the cored holes. See the Special Provisions for masonry plate placement tolerances.
4. Roll in the new ETI truss carrying the lead rubber bearing with the truss.
5. Set the new ETI truss onto the pot bearings on Pier E1. (See suggested installation sequence for pot bearings at pier E1).
6. Temporarily lock up the pot bearings to resist lateral and longitudinal movements at pier E1.
7. Remove the transport gear.
8. Grouting of lead rubber bearings may take place after bridge is opened to traffic.
9. Raise the masonry plate for LRB to be parallel to the bottom surface of the bearing and in tight contact with it. Use the leveling screws for this purpose.
10. Weld the masonry plate to the bottom plate in the bearing.
11. Inject grout under masonry plate and into and around pintles according to approved grouting plan. The designers envision the following procedure.
    a. Build a containment dam around the masonry plate.
    b. Inject grout under the masonry plate, filling also the pintle holes. Inject using a hose to deliver grout to the center of the masonry plate. Work grout outwards from the center (See General Note 4).
12. When the grout has attained a cube strength of of 30 MPa, release the temporary restraint assembly on the pot bearings.

THESE SEQUENCES HAVE BEEN DEVELOPED FOR SAKE OF COMPLETENESS OF DESIGN CONCEPT AND HAVE NOT BEEN DEVELOPED IN DETAIL AND ARE CONCEPTUAL IN NATURE. THE CONTRACTOR SHALL DEVELOP PROCEDURES IN DETAIL TO SATISFY THE REQUIREMENTS SPECIFIED IN THE PLANS AND THE SPECIAL PROVISIONS AND SUBMIT IT TO THE ENGINEER FOR APPROVAL.

ALL DIMENSIONS ARE IN MILLIMETERS UNLESS OTHERWISE SHOWN

SAN FRANCISCO OAKLAND BAY BRIDGE
EAST SPAN SEISMIC SAFETY PROJECT

EAST TIE-IN

BEARING DETAILS NO. 5

T. Ostrom/M. Whiteside/A. Akinsanya — DESIGN OVERSIGHT	DESIGN	BY S. Abbas, J. Otter	CHECKED S. Cheng
SIGN OFF DATE	DETAILS	BY D. Singh	CHECKED A. Lee
	QUANTITIES	BY H. Nelson	CHECKED A. Lee

PREPARED FOR THE STATE OF CALIFORNIA DEPARTMENT OF TRANSPORTATION

M. Sah — PROJECT ENGINEER
S. Abbas — PROJECT MANAGER

BRIDGE NO. 34-0006 (TEMP)
KILOMETER POST 12.6

CU 04 EA 0120R4

DISREGARD PRINTS BEARING EARLIER REVISION DATES

REVISION DATES (PRELIMINARY STAGE ONLY)												SHEET	OF
11/05/07	6/06/08											114C	214

DESIGN DETAIL SHEET (METRIC) (REV. 3/1/98)
◆DATE◆ ◆TIME◆ Pen Table File

ORIGINAL SCALE IN MILLIMETERS FOR REDUCED PLANS 0 10 20 30 40 50 60 70 80 90 100

100% PS&E
FILE => p:\bb\04-0120R1\et1\dgn\akbrgd05.dgn
TIME PLOTTED => 3:47:46 PM
DATE PLOTTED => 6/6/2008
USERNAME => ALee

SUGGESTED INSTALLATION SEQUENCE - POT BEARINGS AT BENT 52A

GENERAL:

1. The Contractor shall develop and demonstrate an installation plan, including a grouting plan, for Engineer approval prior to beginning any work that could be affected by the plan. See the Special Provisions for further requirements.
2. The masonry plates are to be pre-set grouted in place on Bent 52A before roll-out roll-in date.
3. The bearings shall be bolted to the ETI truss before roll-out roll-in date.

SUGGESTED INSTALLATION STEPS:

1. After Bent 52A is constructed, template the as built anchor bolt locations and use these templates to drill the holes in the masonry plates.
2. Install and grout bearing masonry plate according to approved installation plan. The designers envision the following procedure:
   a. Provide grout vent holes in the masonry plate.
   b. Provide grout injection ports, quantity as required, to sufficiently grout the masonry plates.
   c. Set the masonry plate onto the anchor bolts. Shim to level and grade the plate. See the Special Provisions for masonry plate installation tolerances.
   d. Construct a dam around the masonry plates to top of masonry plate elevation.
   e. Inject grout through the injection ports starting at the middle of each plate and working towards the perimeter.
   f. When grout has set, clean up the surface of the masonry plate.
3. Move the ETI truss into place once the grout has attained a minimum cube strength of 30 MPa, carrying the bearings with the truss, and adjust its location.
4. Set the truss down so that weight is carried fully through the bearings.
5. Release the transport gear at the west end of the ETI truss.
6. At this point welding down the bearing to the masonry plate may commence. However it is not necessary to weld the pot bearings at Bent 52A down before lowering the truss at Pier E1.
7. Install and weld the stoppers at Bent 52A.

DIST	COUNTY	ROUTE	KILOMETER POST TOTAL PROJECT	SHEET No	TOTAL
04	SF	80	12.6/13.2		

Sajid Abbas
REGISTERED CIVIL ENGINEER

6-6-08
PLANS APPROVAL DATE

REGISTERED PROFESSIONAL ENGINEER — Sajid Abbas — No. C 055274 — Exp. 12/31/09 — CIVIL — STATE OF CALIFORNIA

The State of California or its officers or agents shall not be responsible for the accuracy or completeness of electronic copies of this plan sheet.

T.Y. LIN / MOFFATT & NICHOL
Two Harrison Street, Suite 500
San Francisco, CA 94105

CONTRACT NO. 04-0120R4

CONTRACT CHANGE ORDER NO 149

SHEET 55 OF 55

THESE SEQUENCES HAVE BEEN DEVELOPED FOR SAKE OF COMPLETENESS OF DESIGN CONCEPT AND HAVE NOT BEEN DEVELOPED IN DETAIL AND ARE CONCEPTUAL IN NATURE. THE CONTRACTOR SHALL DEVELOP PROCEDURES IN DETAIL TO SATISFY THE REQUIREMENTS SPECIFIED IN THE PLANS AND THE SPECIAL PROVISIONS AND SUBMIT IT TO THE ENGINEER FOR APPROVAL.

ALL DIMENSIONS ARE IN MILLIMETERS UNLESS OTHERWISE SHOWN

SAN FRANCISCO OAKLAND BAY BRIDGE
EAST SPAN SEISMIC SAFETY PROJECT

EAST TIE-IN

BEARING DETAILS NO. 6

T. Ostrom/M. Whiteside/A. Akinsanya
DESIGN OVERSIGHT

SIGN OFF DATE

	BY	CHECKED
DESIGN	S. Abbas, J. Otter	S. Cheng
DETAILS	D. Singh	A. Lee
QUANTITIES	H. Nelson	A. Lee

PREPARED FOR THE STATE OF CALIFORNIA DEPARTMENT OF TRANSPORTATION

M. Sah
PROJECT ENGINEER
S. Abbas
PROJECT MANAGER

BRIDGE NO. 34-0006 (TEMP)
KILOMETER POST 12.6

CU
EA 0120R4

DESIGN DETAIL SHEET (METRIC) (REV. 3/1/98)
©DATE© ©TIME© Pen Table File

ORIGINAL SCALE IN MILLIMETERS FOR REDUCED PLANS 0 10 20 30 40 50 60 70 80 90 100

DISREGARD PRINTS BEARING EARLIER REVISION DATES → 11/05/07 6/06/08

REVISION DATES (PRELIMINARY STAGE ONLY)

SHEET 114D OF 214

100% PS&E

FILE => p:\bb\04-012001\ett\dgn\akbrga06.dgn
TIME PLOTTED => 3:47:18 PM
DATE PLOTTED => 6/6/2008
USERNAME => ALee

CONTRACT CHANGE ORDER

Change Requested by: Engineer

CCO 149	Suppl. No. 1	Contract No. 04 - 0120R4	Road SF-80-12.6/13.2	FED. AID LOC.:

To: **CC MYERS INC**

You are directed to make the following changes from the plans and specifications or do the following described work not included in the plans and specifications for this contract. ***NOTE: This change order is not effective until approved by the Engineer.***

Description of work to be done, estimate of quantities and prices to be paid. (Segregate between additional work at contract price, agreed price and force account.) Unless otherwise stated, rates for rental of equipment cover only such time as equipment is actually used and no allowance will be made for idle time. This last percentage shown is the net accumulated increase or decrease from the original quantity in the Engineer's Estimate.

Incorporate the changes to the bearing details of the East Tie-In portion of the Temporary Bypass Structure (Bridge No. 34-0006 (TEMP)) as shown in the revised plan sheets of Sheet No. 2 of this change order.

All revisions to the bearing details shown on Sheet No. 2 of this change order shall supersede the original plan sheet issued under the original Change Order No. 149.

Extra Work at Force Account:

Provide compensation for additional costs incurred resulting from the revisions to the East Tie-In Bearings incorporated under this change order and provide additional funding for the work specified as extra work at force account under the original Change Order No. 149.

Estimated Cost of Extra Work at Force Account $400,000.00

Estimated Cost: Increase ☑ Decrease ☐ **$400,000.00**

By **reason of this order the time of completion will be adjusted as follows:** 0 days

Submitted by

Signature	Resident Engineer	Date
	BILL CASEY	10-3-09

Approval Recommended by

Signature	SFOBB Construction Manager	Date
for	MIKE FORNER	10-12-09

Engineer Approval by

Signature	SFOBB Construction Manager	Date
	MIKE FORNER	11/17/09

We the undersigned contractor, have given careful consideration to the change proposed and agree, if this proposal is approved, that we will provide all equipment, furnish the materials, except as may otherwise be noted above, and perform all services necessary for the work above specified, and will accept as full payment therefor the prices shown above.

NOTE: If you, the contractor, do not sign acceptance of this order, your attention is directed to the requirements of the specifications as to proceeding with the ordered work and filing a written protest within the time therein specified.

Contractor Acceptance by

Signature	(Print name and title)	Date
	DANIEL E. HINCK, PRESIDENT	11/6/09

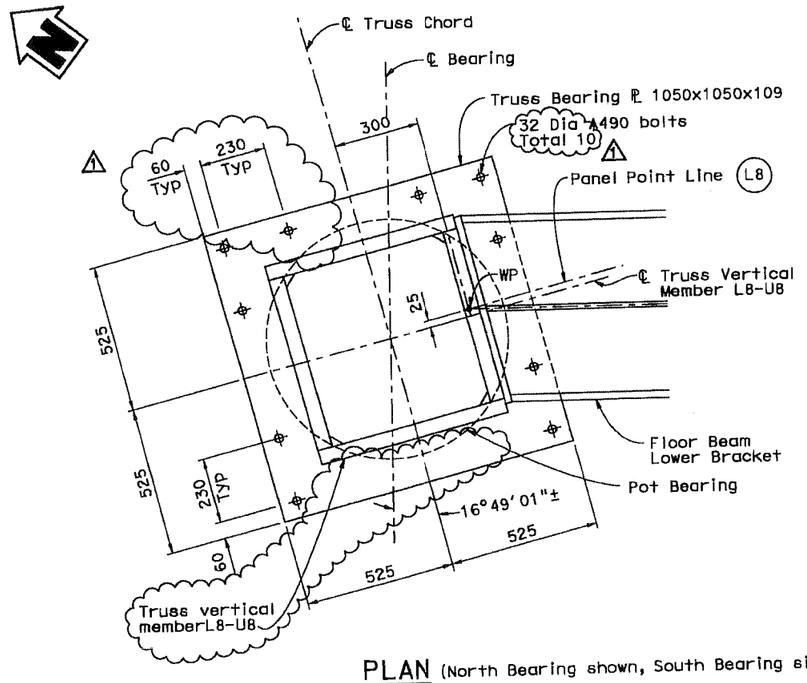

PLAN (North Bearing shown, South Bearing similar)
1:10

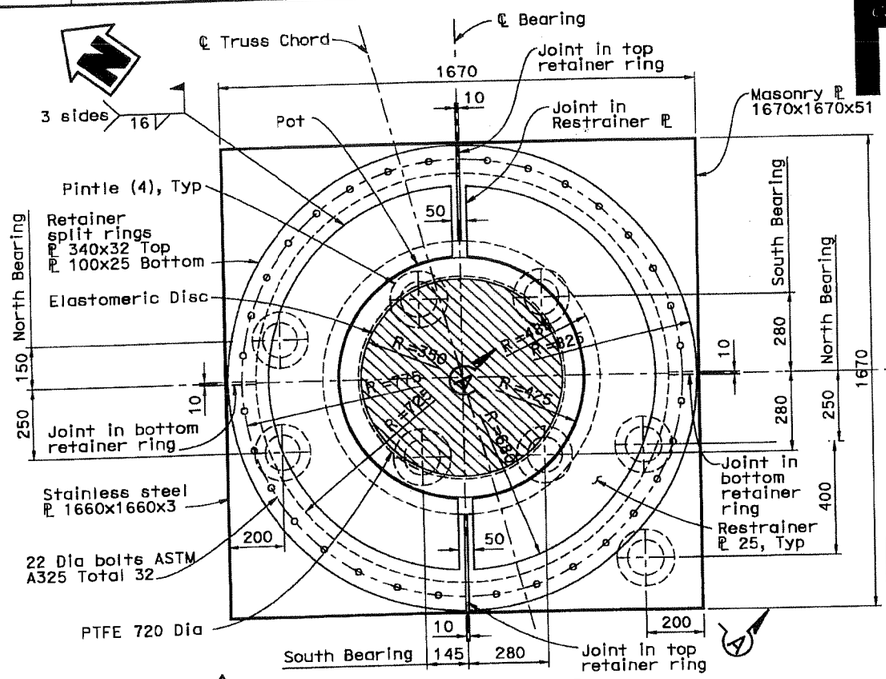

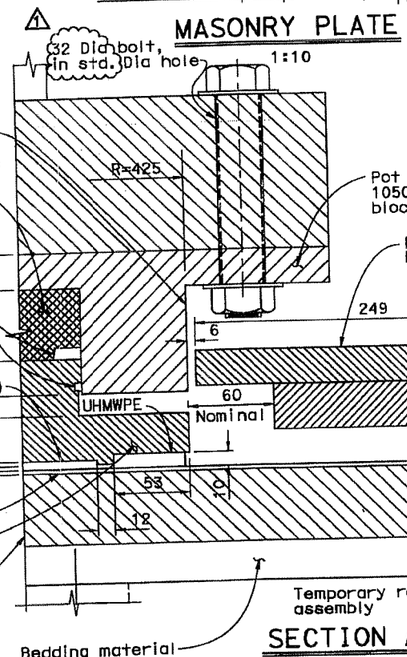

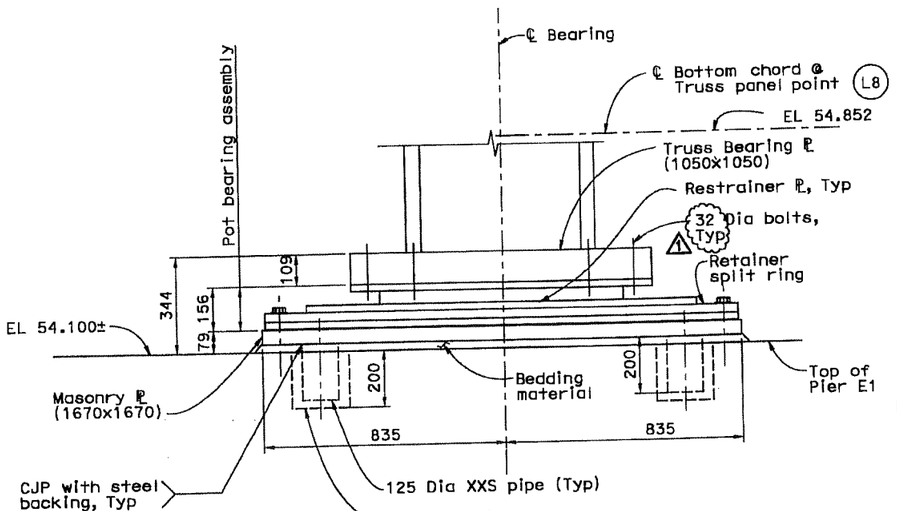

ELEVATION (North Bearing shown, South Bearing similar)
1:10

DIST	COUNTY	ROUTE	KILOMETER POST TOTAL PROJECT	SHEET No	TOTAL
04	SF	80	12.6/13.2		

Caltrans Metric

REGISTERED CIVIL ENGINEER

6-6-08
PLANS APPROVAL DATE

REGISTERED PROFESSIONAL ENGINEER — Charles Redfield — No. C 27605 — Exp. 12/31/09 — CIVIL — STATE OF CALIFORNIA

The State of California or its officers or agents shall not be responsible for the accuracy or completeness of electronic copies of this plan sheet.

T.Y. LIN / MOFFATT & NICHOL
Two Harrison Street, Suite 500
San Francisco, CA 94105

Notes:

1. Pot bearing to be supplied with temporary clamping device to prevent separation of components during transport and erection. To be removed after installation is complete.
2. Cored hole location may be adjusted, subject to the approval of the Engineer.
3. The Contractor shall develop for the Engineer approval a written plan that will assure grout completely fills all voids and around the pintles.

MARK	DATE	REVISIONS	BY	CH'D	CCO#
1	7/18/08	REVISE BOLTS IN BEARING ℙ	DG	MS	

CONTRACT CHANGE ORDER NO. 149-S1
SHEET 2 OF 2

POT BEARING TABLE

Bearing Location	Quantity	Design loads (kN) Service Vertical	Service Horizontal	Factored Vertical	Factored Horizontal	Design Movements Horizontal (mm)	Rotation (Radians)
Pier E1 (North & South)	2	9600	-	14200	-	450	0.02

100% PS&E

DESIGN	BY C. Redfield, J. Stanton	CHECKED S. Cheng, I.Aiken	PREPARED FOR THE STATE OF CALIFORNIA DEPARTMENT OF TRANSPORTATION	M. Sah PROJECT ENGINEER	BRIDGE NO. 34-0006 (TEMP)
DETAILS	BY S. Lee, P. Zhao	CHECKED A. Lee		S. Abbas PROJECT MANAGER	KILOMETER POST 12.6
QUANTITIES	BY H. Nelson	CHECKED A. Lee		CU EA 0120R4	

T. Ostrom/M. Whiteside/A. Akinsanya
DESIGN OVERSIGHT
SIGN OFF DATE

ALL DIMENSIONS ARE IN MILLIMETERS UNLESS OTHERWISE SHOWN

ORIGINAL SCALE IN MILLIMETERS FOR REDUCED PLANS 0 10 20 30 40 50 60 70 80 90 100

DESIGN DETAIL SHEET (METRIC) REV. 3/1/00 ⊕DATE⊕ ⊕TIME⊕ Pen Table File

FILE => P:\BB\04-012001\ET1\CCO Bearing-7-18-08\akbrgd03.dgn

SAN FRANCISCO OAKLAND BAY BRIDGE
EAST SPAN SEISMIC SAFETY PROJECT

EAST TIE-IN

BEARING DETAILS NO. 3

DISREGARD PRINTS BEARING EARLIER REVISION DATES → REVISION DATES (PRELIMINARY STAGE ONLY) 11/2007 5/2008 7/2008

SHEET 114A OF 214

USERNAME => Alee
DATE PLOTTED => 7/21/2008
TIME PLOTTED => 11:41:52 AM
FILE => P:\BB\04-012001\ET1\CCO Bearing-7-18-08\akbrgd03.dgn

STATE OF CALIFORNIA - DEPARTMENT OF TRANSPORTATION

CONTRACT CHANGE ORDER MEMORANDUM

TO: MIKE FORNER / DEANNA VILCHECK	FILE: E.A. 04 - 0120R4
FROM: BILL CASEY	CO-RTE-PM SF-80-12.6/13.2
	FED. NO.
CCO#: **149** SUPPLEMENT#: **1** Category Code: **CHPA**	CONTINGENCY BALANCE (incl. this change) **$48,029,593.59**
COST: **$400,000.00** INCREASE ☑ DECREASE ☐	HEADQUARTERS APPROVAL REQUIRED? ☑ YES ☐ NO
SUPPLEMENTAL FUNDS PROVIDED: **$0.00**	IS THIS REQUEST IN ACCORDANCE WITH ENVIRONMENTAL DOCUMENTS? ☑ YES ☐ NO
CCO DESCRIPTION: Revised ETI Bearing Detail Plan Sheets	**PROJECT DESCRIPTION:** CONSTRUCT ROUTE 80 TEMP BYPASS STRUCTURE

Original Contract Time:	Time Adj. This Change:	Previously Approved CCO Time Adjustments:	Percentage Time Adjusted: (including this change)	Total # of Unreconciled Deferred Time CCO(s): (including this change)
475 Day(s)	**0** Day(s)	**1195** Day(s)	**252** %	**7**

THIS CHANGE ORDER PROVIDES FOR:

Minor design revisions to the bearing details of the East Tie-In (ETI) structure.

This contract provides for the construction of a temporary detour for both eastbound and westbound I-80 traffic that allows for the tie in of the east span of the new San Francisco Oakland Bay Bridge (SFOBB) to Yerba Buena Island. The detour will allow for the construction of the permanent structure, the Yerba Buena Island Transition Structure, which connects the signature SAS structure to Yerba Buena Island.

The detour consist of three main structures, the East Tie-In (ETI) to the bridge, the West Tie-In to the island and the viaduct structure between the two tie ins. The contract was awarded as a performance based project with the contractor responsible for meeting the design criteria specified in the contract.

A December 14, 2006 Department strategy memorandum, approved by Tony Anziano, Toll Bridge Program Manager, and Richard Land, Chief Engineer, recommended that the Department assume the design responsibility for the East Tie-In (ETI) structure. Based on this memorandum, the design of the structure was changed from a design that incorporated the existing steel truss bridge with the new structure to a design that replaces the existing structure with a new structure (roll out / roll in).

The original Change Order No. 149 provided the plans and specifications necessary for the fabrication of the 6 permanent bearings for the ETI structure and provided compensation for the fabrication of a prototype bearing to be used in testing. That change order provided for the work to be performed as extra work at force account. This change order incorporates minor changes to the originally issued plan sheets for the bearing details as issued by Toll Bridge Design.

It is anticipated that the current force account funding shall be inadequate to compensate the contractor for the additional costs resulting from these design revisions and for the work specified under the original change order. The cost of the fabrication of the bearings, the prototype testing and the field inspection of the condition of the existing pier that will support 4 of the 6 permanent bearings is expected to exceed the original cost estimate.

The work shall be compensated as extra work at force account at an estimated cost of $400,000.00 which shall be financed from the contract contingency funds. A cost analysis is on file.

No adjustment of contract time is warranted as the change will not affect the controlling operation.

This change was concurred with by Alec Melkonians - Project Manager, Hong Wong - Project Engineer, and Lina Ellis - Structure Maintenance. TBPOC Approval pending.

ADA Notice: For individuals with sensory disabilities, this document is available in alternate formats. For information call: (916) 654-6410 or TDD (916) 654-3880 or write Records and Forms Management, 1120 N Street, MS-89, Sacramento, CA 95814

CONCURRED BY:		
Construction Engineer:	Bill Casey, Resident Engineer	Date 10-3-09
Bridge Engineer:		Date
Project Engineer:	Hong Wong, PE	Date 9-29-09
Project Manager:	Alec Melkonians	Date 9/23/09
FHWA Rep.:		Date
Environmental:		Date
Other (specify):	Lina Ellis, Maintenance	Date 9-29-09
Other (specify):		Date
District Prior Approval By:		Date
HQ (Issue Approve) By:	Bob Molera, HQ CCO Engineer	Date 10-15-09
Resident Engineer's Signature:		Date 10-3-09

ESTIMATE OF COST

	THIS REQUEST	TOTAL TO DATE
ITEMS	$0.00	$0.00
FORCE ACCOUNT	$400,000.00	$2,000,000.00
AGREED PRICE	$0.00	$0.00
ADJUSTMENT	$0.00	$0.00
TOTAL	$400,000.00	$2,000,000.00

FEDERAL PARTICIPATION

☐ PARTICIPATING ☐ PARTICIPATING IN PART ☑ NONE
☐ NON-PARTICIPATING (MAINTENANCE) ☐ NON-PARTICIPATING

FEDERAL SEGREGATION (if more than one Funding Source or P.I.P. type)
☐ CCO FUNDED PER CONTRACT ☐ CCO FUNDED AS FOLLOWS

FEDERAL FUNDING SOURCE	PERCENT

ADA Notice: For individuals with sensory disabilities, this document is available in alternate formats. For information call: (916) 654-6410 or TDD (916) 654-3880 or write Records and Forms Management, 1120 N Street, MS-89, Sacramento, CA 95814

STATE OF CALIFORNIA - DEPARTMENT OF TRANSPORTATION

CONTRACT CHANGE ORDER

Change Requested by: Contractor

CCO 150	Suppl. No. 0	Contract No. 04 - 0120R4	Road SF-80-12.6/13.2	FED. AID LOC.: ACBRIM-080-1(097)N

To: **CC MYERS INC**

You are directed to make the following changes from the plans and specifications or do the following described work not included in the plans and specifications for this contract. ***NOTE: This change order is not effective until approved by the Engineer.***

Description of work to be done, estimate of quantities and prices to be paid. (Segregate between additional work at contract price, agreed price and force account.) Unless otherwise stated, rates for rental of equipment cover only such time as equipment is actually used and no allowance will be made for idle time. This last percentage shown is the net accumulated increase or decrease from the original quantity in the Engineer's Estimate.

Extra Work at Lump Sum:

Compensate the Contractor for the additional costs incurred in the construction of the sewer line at Bent 52 (Final Utility Plan Sheet U-4) pursuant to Section 5-1.116, Differing Site Conditions, of the Standard Specifications.

For this work, the contractor will be paid the sum of $ 242,330.88. This sum constitutes full and complete compensation, including markups, for this change.

Total cost of Extra Work at Lump Sum $242,330.88

Estimated Cost: **Increase** ☑ **Decrease** ☐ **$242,330.88**

By reason of this order the time of completion will be adjusted as follows: 0 days

Submitted by

Signature	Resident Engineer	Date
	BILL CASEY	3-13-09

Approval Recommended by

Signature	Area Construction Manager	Date
Deanna Vilcheck	DEANNA VILCHECK	3/16/09

Engineer Approval by

Signature	Area Construction Manager	Date
Deanna Vilcheck	DEANNA VILCHECK	3/18/09

We the undersigned contractor, have given careful consideration to the change proposed and agree, if this proposal is approved, that we will provide all equipment, furnish the materials, except as may otherwise be noted above, and perform all services necessary for the work above specified, and will accept as full payment therefor the prices shown above.

NOTE: If you, the contractor, do not sign acceptance of this order, your attention is directed to the requirements of the specifications as to proceeding with the ordered work and filing a written protest within the time therein specified.

Contractor Acceptance by

Signature	(Print) name and title)	Date
	DANIEL E. HUMICK, PRESIDENT	4/03/09

STATE OF CALIFORNIA - DEPARTMENT OF TRANSPORTATION

CONTRACT CHANGE ORDER MEMORANDUM

DATE: 1/21/2009 Page 1 of 1

TO: MIKE FORNER / DEANNA VILCHECK	FILE: E.A. 04 - 0120R4
FROM: BILL CASEY	CO-RTE-PM SF-80-12.6/13.2
	FED. NO. ACBRIM-080-1(097)N
CCO#: 150 SUPPLEMENT#: 0 Category Code: ACZZ	CONTINGENCY BALANCE (incl. this change) $72,144,090.05
COST: $242,330.88 INCREASE ☑ DECREASE ☐	HEADQUARTERS APPROVAL REQUIRED? ☑ YES ☐ NO
SUPPLEMENTAL FUNDS PROVIDED: $0.00	IS THIS REQUEST IN ACCORDANCE WITH ENVIRONMENTAL DOCUMENTS? ☑ YES ☐ NO
CCO DESCRIPTION: Bent 52A Sewer Line Relocation (DSC)	**PROJECT DESCRIPTION:** CONSTRUCT ROUTE 80 TEMP BYPASS STRUCTURE

Original Contract Time:	Time Adj. This Change:	Previously Approved CCO Time Adjustments:	Percentage Time Adjusted: (including this change)	Total # of Unreconciled Deferred Time CCO(s): (including this change)
475 Day(s)	0 Day(s)	1195 Day(s)	252 %	7

THIS CHANGE ORDER PROVIDES FOR:

Compensate the Contractor for the additional costs incurred in the construction of the sewer line at Bent 52 (Final Utility Plan Sheet U-4) pursuant to Section 5-1.116, Differing Site Conditions, of the Standard Specifications.

This project, the Temporary Bypass Structure (TBS), was awarded in March 2004 to construct a detour that will allow for the tie in of the new east span of the San Francisco-Oakland Bay Bridge to Yerba Buena Island. The TBS encompasses three main structures, the East Tie-In (ETI) to the existing bridge, the West Tie-In (WTI) to Yerba Buena Island, and the Viaduct structure between the two tie ins.

The Final Utility Design Plans called for the existing sewer line at Bent 52 to be relocated due to a conflict with the Bent 52 footing. The Contractor proceeded with the sewer line relocation work and subsequently uncovered a pre-existing leak in the sewer line. The Contractor claimed a differing site condition and filed a notice for additional compensation on June 30, 2005 in accordance with Section 5-1.116, Differing Site Conditions, of the Standard Specifications in order to manage the contaminated soil. The Department investigated this request and found it to be reasonable and justified.

The Contractor shall be compensated in Extra Work at Lump Sum price of $ 242,330.88, which shall be financed from the contract's contingency funds. A cost analysis was submitted by the Contractor, reviewed by the Department and verified to be reasonable for payment. This analysis is on file.

No adjustment of contract time is warranted since this change does not affect the controlling operation.

This change was concurred by Alec Melkonians - Asst. Project Manager and Hong Wong - Project Engineer.

CONCURRED BY:		
Construction Engineer:	Mahantesh Anigol - Sr. TE	Date 3-16-09
Bridge Engineer:		Date
Project Engineer:	Hong Wong, PE	Date 1/26/09
Project Manager:	Alec Melkonians	Date 1/22/09
FHWA Rep.:		Date
Environmental:		Date
Other (specify):		Date
Other (specify):		Date
District Prior Approval By:		Date
HQ (Issue Approve) By:	Bob Molera, HQ CCO Engineer	Date
Resident Engineer's Signature:		Date

3-13-09

ESTIMATE OF COST	THIS REQUEST	TOTAL TO DATE
ITEMS	$0.00	$0.00
FORCE ACCOUNT	$0.00	$0.00
AGREED PRICE	$242,330.88	$242,330.88
ADJUSTMENT	$0.00	$0.00
TOTAL	$242,330.88	$242,330.88

FEDERAL PARTICIPATION

☐ PARTICIPATING ☐ PARTICIPATING IN PART ☑ NONE
☐ NON-PARTICIPATING (MAINTENANCE) ☐ NON-PARTICIPATING

FEDERAL SEGREGATION (if more than one Funding Source or P.I.P. type)
☐ CCO FUNDED PER CONTRACT ☐ CCO FUNDED AS FOLLOWS

FEDERAL FUNDING SOURCE	PERCENT

ADA Notice: For individuals with sensory disabilities, this document is available in alternate formats. For information call: (916) 654-6410 or TDD (916) 654-3880 or write Records and Forms Management, 1120 N Street, MS-89, Sacramento, CA 95814.

STATE OF CALIFORNIA - DEPARTMENT OF TRANSPORTATION

CONTRACT CHANGE ORDER

Change Requested by: Engineer

CCO 151 | Suppl. No. 0 | Contract No. 04 - 0120R4 | Road SF-80-12.6/13.2 | FED. AID LOC.: ACBRIM-080-1(097)N

To: CC MYERS INC

You are directed to make the following changes from the plans and specifications or do the following described work not included in the plans and specifications for this contract. ***NOTE: This change order is not effective until approved by the Engineer.***

Description of work to be done, estimate of quantities and prices to be paid. (Segregate between additional work at contract price, agreed price and force account.) Unless otherwise stated, rates for rental of equipment cover only such time as equipment is actually used and no allowance will be made for idle time. This last percentage shown is the net accumulated increase or decrease from the original quantity in the Engineer's Estimate.

Adjustment of Compensation at Lump Sum:

Modify the tenth paragraph of Section 5-1.04, "Public Safety," of the Special Provisions to add the following:

" With the approval of the Engineer, allow the Contractor to safely clear the traffic queue on Macalla Road and allow traffic to pass beneath a crane's boom in the event that work activities cannot be completed as planned within the 15 minute blocked access restriction as stated in the United States Coast Guard license agreement issued to the Department."

The following procedure shall be followed due to this change:

1. The Contractor shall submit a request for approval to the on-site Lead Engineer to allow public traffic to pass underneath a crane boom.
2. Cease all crane operation work.
3. The Lead Engineer will assess the area for hazards prior to approval and if present, the Contractor shall remedy the situation immediately to the satisfaction of the Lead Engineer.
4. The Lead Engineer will provide written approval to the Contractor before public traffic is allowed to pass underneath the crane boom on Macalla Road.
5. Resume crane operation work with a new start time of the USCG agreed upon 15 minutes block access restriction.
6. The Contractor shall submit a letter to the Engineer stating all the facts that necessitated the equipment to be positioned over traffic and what measures are to be taken to prevent the occurrence of such an incident in the future.

For this work the contractor will be paid the lump sum of $0.00. This sum constitutes full compensation, including all markups, for this change. Any additional work or related costs to this change shall be born by the Contractor.

Total Cost of Adjustment of Compensation at Agreed Lump Sum.....$0.00

Estimated Cost: Increase ☐ Decrease ☐ $0.00

By reason of this order the time of completion will be adjusted as follows: 0 days

Submitted by

Signature	Resident Engineer	Date
	BILL CASEY	8-21-08

Approval Recommended by

Signature	Area Construction Manager	Date
Deanna Vilcheck	DEANNA VILCHECK	8/25/08

Engineer Approval by

Signature	Area Construction Manager	Date
Deanna Vilcheck	DEANNA VILCHECK	9/17/08

We the undersigned contractor, have given careful consideration to the change proposed and agree, if this proposal is approved, that we will provide all equipment, furnish the materials, except as may otherwise be noted above, and perform all services necessary for the work above specified, and will accept as full payment therefor the prices shown above.

NOTE: If you, the contractor, do not sign acceptance of this order, your attention is directed to the requirements of the specifications as to proceeding with the ordered work and filing a written protest within the time therein specified.

Contractor Acceptance by

Signature	(Print name and title)	Date
Dewey C Lee Jr	DEWEY C. LEE JR Contract Manager	8/28/08

CONTRACT CHANGE ORDER

Change Requested by: Engineer

CCO 152	Suppl. No. 0	Contract No. 04 - 0120R4	Road SF-80-12.6/13.2	FED. AID LOC.: ACBRIM-080-1(097)N

To: **CC MYERS INC**

You are directed to make the following changes from the plans and specifications or do the following described work not included in the plans and specifications for this contract. ***NOTE: This change order is not effective until approved by the Engineer.***

Description of work to be done, estimate of quantities and prices to be paid. (Segregate between additional work at contract price, agreed price and force account.) Unless otherwise stated, rates for rental of equipment cover only such time as equipment is actually used and no allowance will be made for idle time. This last percentage shown is the net accumulated increase or decrease from the original quantity in the Engineer's Estimate.

Extra Work at Lump Sum:

As authorized by the Engineer and in accordance with Sheets 2 through 5 of this change, construct a temporary realigned Macalla Road underneath Span 51 of the Temporary Bypass Structure (TBS).

For this work, the Contractor shall be compensated at a lump sum price of $ 336,420.00. The work includes but is not limited to placing aggregate base and asphalt concrete, installing temporary k-rails, retaining wall and striping, and performing excavation and placing embankment. This sum constitutes full and final compensation, including temporary K-rail rental for the entire duration and markups, for the work of this change.

Any restoration of the area shall be addressed in a separate Contract Change Order.

Total cost of Extra Work at Lump Sum $336,420.00

Estimated Cost: **Increase** ☑ **Decrease** ☐ **$336,420.00**

By reason of this order the time of completion will be adjusted as follows: 0 days

Submitted by

Signature	Resident Engineer	Date
	BILL CASEY	12-4-08

Approval Recommended by

Signature	Area Construction Manager	Date
Deanna Vilcheck	DEANNA VILCHECK	1/5/09

Engineer Approval by

Signature	Area Construction Manager	Date
Deanna Vilcheck	DEANNA VILCHECK	2/4/09

We the undersigned contractor, have given careful consideration to the change proposed and agree, if this proposal is approved, that we will provide all equipment, furnish the materials, except as may otherwise be noted above, and perform all services necessary for the work above specified, and will accept as full payment therefor the prices shown above.

NOTE: If you, the contractor, do not sign acceptance of this order, your attention is directed to the requirements of the specifications as to proceeding with the ordered work and filing a written protest within the time therein specified.

Contractor Acceptance by

Signature	(Print name and title)	Date
	DANIEL E. HIMICK, PRESIDENT	1/20/09

DIST	COUNTY	ROUTE	KILOMETER POST TOTAL PROJECT	SHEET No	TOTAL SHEETS
04	SF	80	12.9		

Justina L. Conklin
REGISTERED CIVIL ENGINEER

PLANS APPROVAL DATE

REGISTERED PROFESSIONAL ENGINEER — JUSTINA CONKLIN No. C63183 Exp. 07/30/09 CIVIL — STATE OF CALIFORNIA

The State of California or its officers or agents shall not be responsible for the accuracy or completeness of electronic copies of this plan sheet.

TRC
10680 White Rock Road, Suite 100
Rancho Cordova, CA 95670

DATE	REVISED BY
2/03	DATE REVISED

CALCULATED/ DESIGNED BY

CHECKED BY

DESIGN OVERSIGHT

STATE OF CALIFORNIA - DEPARTMENT OF TRANSPORTATION
Caltrans

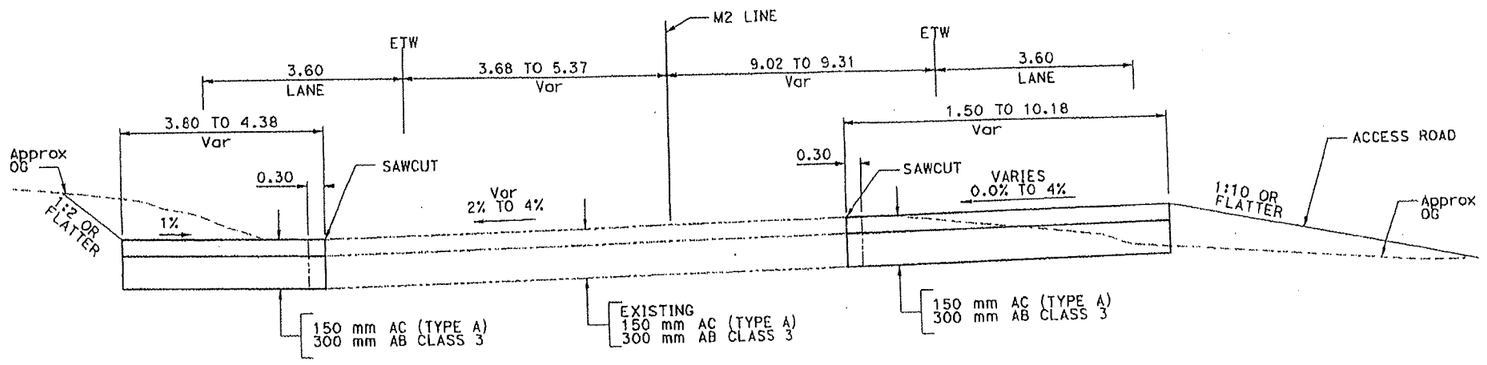

M2 LINE
STA 12+62 TO 12+71.87

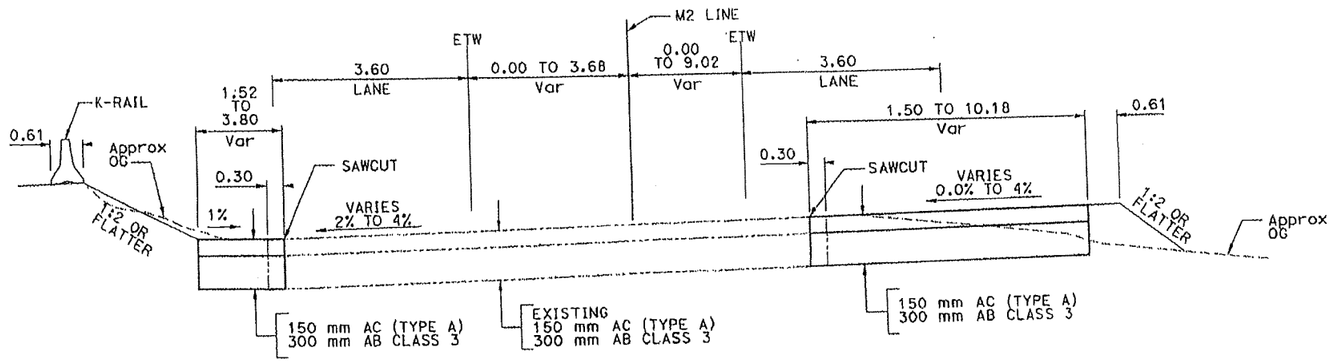

M2 LINE
STA 12+42.170 TO 12+62.00

CONTRACT NO. 04-0120R4

CONTRACT CHANGE ORDER NO 152

SHEET 2 OF 5

NOTES:

1. CONTRACTOR SHALL PIN K-RAIL PER T3 SECTION G-G OF STANDARD PLANS DATED MAY 2006 OR AS DIRECTED BY ENGINEER.
2. PROVIDE EROSION CONTROL ON EXPOSED SLOPES.

TYPICAL CROSS SECTIONS

NO SCALE

X-1

ALL DIMENSIONS ARE IN METERS UNLESS OTHERWISE SHOWN

RELATIVE BORDER SCALE IS IN MILLIMETERS 0 20 40 60 80

DGN FILE: => $REQUEST
USERNAME => $USER

CU 04251

EA 0120R1

LAST REVISION 00-00-00 | DATE PLOTTED => $DATE | TIME PLOTTED => $TIME

DIST	COUNTY	ROUTE	KILOMETER POST TOTAL PROJECT	SHEET NO	TOTAL SHEETS
04	SF	80	12.9		

Justina L. Conklin
REGISTERED CIVIL ENGINEER

PLANS APPROVAL DATE

The State of California or its officers or agents shall not be responsible for the accuracy or completeness of electronic copies of this plan sheet.

REGISTERED PROFESSIONAL ENGINEER
JUSTINA CONKLIN
No. C03185
EXP. 07/30/09
CIVIL
STATE OF CALIFORNIA

TRC
10680 White Rock Road, Suite 100
Rancho Cordova, CA 95670

DATE	REVISED BY	DATE REVISED
2/03		2/03

CALCULATED/ DESIGNED BY

CHECKED BY

DESIGN OVERSIGHT

STATE OF CALIFORNIA - DEPARTMENT OF TRANSPORTATION

Caltrans

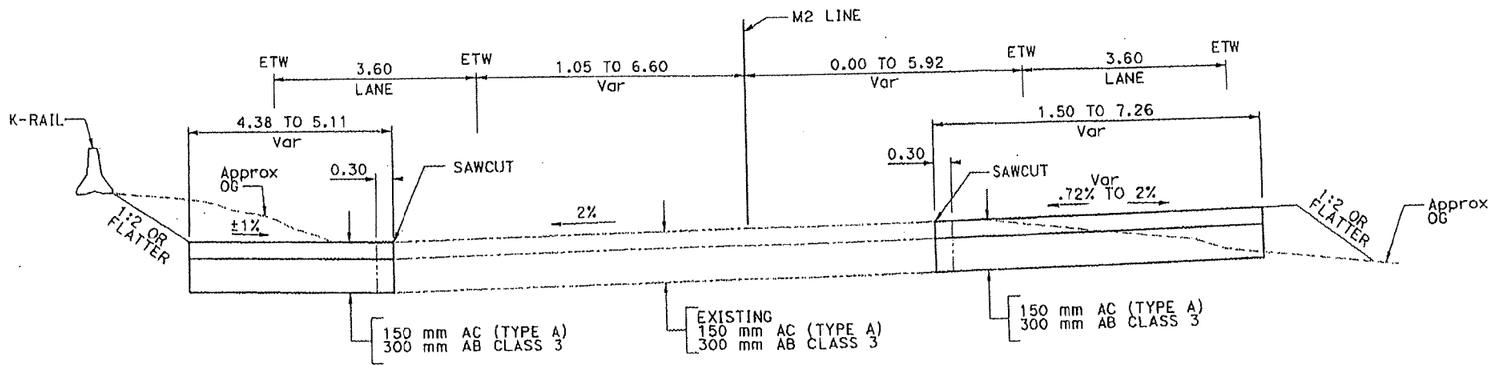

M2 LINE
STA 12+86.17 TO 13+09.96

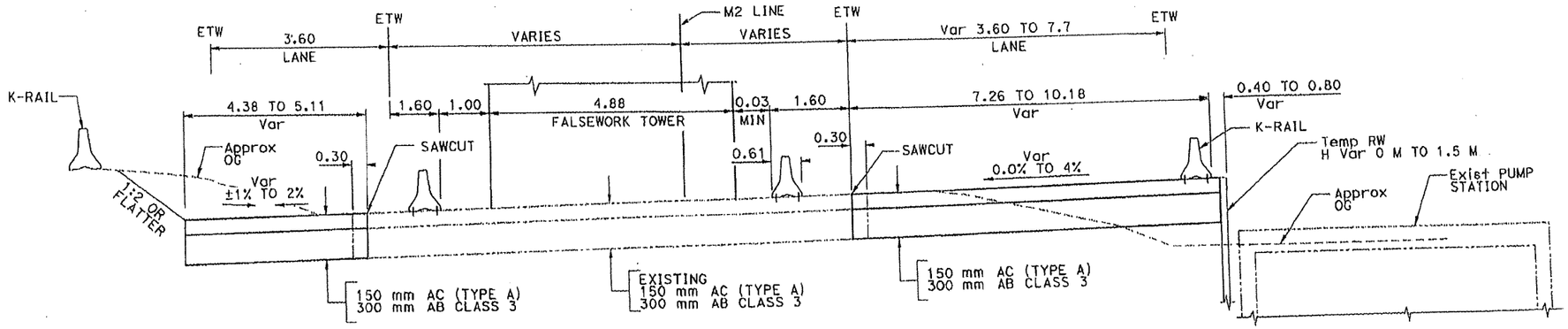

M2 LINE
STA 12+72 TO 12+86.17

CONTRACT NO. 04-0120R4

CONTRACT CHANGE ORDER NO 152

SHEET 3 OF 5

NOTES:

1. CONTRACTOR SHALL PIN K-RAIL PER T3 SECTION G-G OF STANDARD PLANS DATED MAY 2006 OR AS DIRECTED BY ENGINEER.
2. PROVIDE EROSION CONTROL ON EXPOSED SLOPES.

TYPICAL CROSS SECTIONS

NO SCALE

X-2

ALL DIMENSIONS ARE IN METERS UNLESS OTHERWISE SHOWN

RELATIVE PAPER SCALE 0 20 40 60 80

LAST REVISION DATE PLOTTED => $DATE

DGN FILE => $REQUEST

DIST	COUNTY	ROUTE	KILOMETER POST TOTAL PROJECT	SHEET No	TOTAL SHEETS
04	SF	80	12.9		

Justina L. Conklin
REGISTERED CIVIL ENGINEER

PLANS APPROVAL DATE

The State of California or its officers or agents shall not be responsible for the accuracy or completeness of electronic copies of this plan sheet.

REGISTERED PROFESSIONAL ENGINEER JUSTINA CONKLIN No. C53183 Exp. 07/30/09 CIVIL STATE OF CALIFORNIA

TRC 10680 White Rock Road, Suite 100 Rancho Cordova, CA 95670

Caltrans Metric

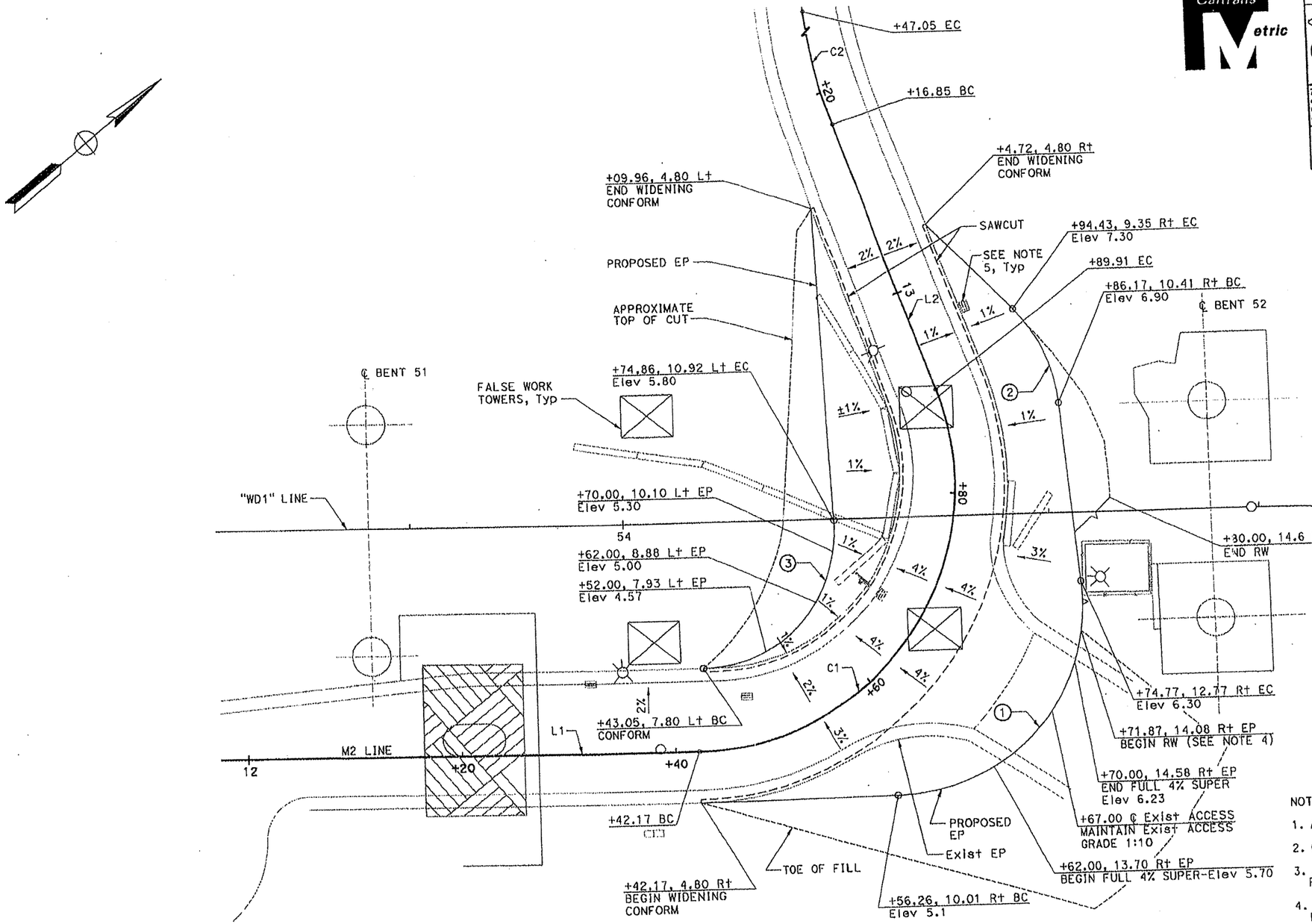

CURVE DATA

CURVE	R	Δ	T	L
C1	25.0	109°25'08"	35.32	47.74
C2	50.0	34°36'39"	15.58	30.20
1	18.0	94°36'20"	19.51	29.72
2	15.0	38°02'59"	5.17	9.96
3	13.0	92°21'30"	13.55	20.96

NOTES:

1. ALL ELEVATIONS SHOWN ARE APPROXIMATE.
2. GRADING SHOWN IS APPROXIMATE.
3. ALL STATIONS/OFFSETS ARE REFERENCED FROM THE M2 LINE.
4. RETAINING WALL TO BE DESIGNED BY OTHERS. HEIGHT OF WALL VARIES FROM 0 M TO 1.5 M. CONTRACTOR TO VERIFY 0.4 M CLEARANCE FROM EP TO EDGE OF PUMP STATION. RETAINING WALL TO BE CONSTRUCTED WITHIN THESE LIMITS.
5. WARP PAVEMENT TO DRAIN AT INLETS.

CONTRACT NO. 04-0120R4

CONTRACT CHANGE ORDER NO 152

SHEET 4 OF 5

SEGMENT DATA

SEGMENT	BEARING	DISTANCE
L1	N 39°14'09" E	42.17
L2	N 70°10'59" W	42.52

M2 LINE DATA

LOCATION	STATION	NORTHING	EASTING
BEGIN	12+00.00	647287.77	1836110.02
END	13+47.05	647386.85	1836076.75

ALL DIMENSIONS ARE IN METERS UNLESS OTHERWISE SHOWN

LAYOUT

SCALE: 1:200

L-1

STATE OF CALIFORNIA - DEPARTMENT OF TRANSPORTATION

Caltrans

DESIGN OVERSIGHT

CALCULATED/DESIGNED BY

CHECKED BY

DATE

REVISED BY

DATE REVISED

LAST REVISION DATE PLOTTED -> $DATE

RELATIVE BORDER SCALE 0 20 40 60 80

LOGN FILE -> $REQUEST

DIST	COUNTY	ROUTE	KILOMETER POST TOTAL PROJECT	SHEET No	TOTAL SHEETS
04	SF	80	12.9		

Justina L. Conklin
REGISTERED CIVIL ENGINEER

REGISTERED PROFESSIONAL ENGINEER — JUSTINA CONKLIN — No. C63103 — Exp. 07/30/09 — CIVIL — STATE OF CALIFORNIA

PLANS APPROVAL DATE

The State of California or its officers or agents shall not be responsible for the accuracy or completeness of electronic copies of this plan sheet.

TRC
10680 White Rock Road, Suite 100
Rancho Cordova, CA 95670

Caltrans Metric

DATE | REVISED BY | DATE REVISED

CALCULATED/ DESIGNED BY | CHECKED BY

DESIGN OVERSIGHT

STATE OF CALIFORNIA - DEPARTMENT OF TRANSPORTATION
Caltrans

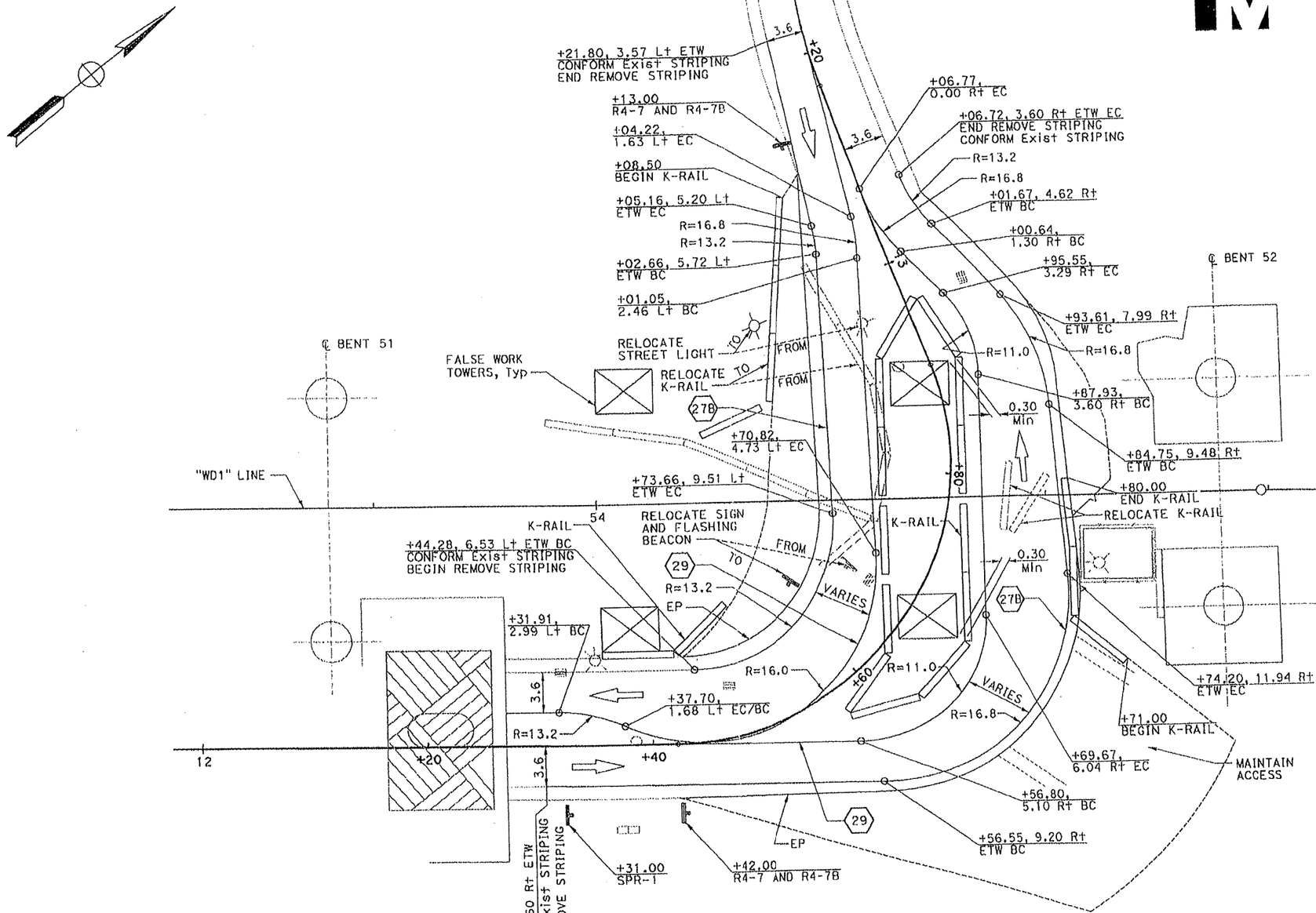

CONTRACT NO. 04-0120R4

CONTRACT CHANGE ORDER NO 152

SHEET 5 OF 5

450 mm

HOLD FOR ONCOMING TRUCK TRAFFIC

600 mm

SPR-1

NOTES:

1. REMOVE ALL EXISTING STRIPING WITHIN PROJECT LIMITS.
2. CONTRACTOR SHALL PIN K-RAIL PER T3 SECTION G-G OF STANDARD PLANS DATED MAY 2006 OR AS DIRECTED BY ENGINEER.

ALL DIMENSIONS ARE IN METERS UNLESS OTHERWISE SHOWN

PAVEMENT DELINEATION AND SIGN PLAN

SCALE: 1:200

PD-1

RELATIVE BORDER SCALE 0 20 40 60 80

DGN FILE #) $REQUEST

LAST REVISION DATE PLOTTED => $DATE

CONTRACT CHANGE ORDER

Change Requested by: Engineer

CCO 153	Suppl. No. 0	Contract No. 04 - 0120R4	Road SF-80-12.6/13.2	FED. AID LOC.: ACBRIM-080-1(097)N

To: CC MYERS INC

You are directed to make the following changes from the plans and specifications or do the following described work not included in the plans and specifications for this contract. ***NOTE: This change order is not effective until approved by the Engineer.***

Description of work to be done, estimate of quantities and prices to be paid. (Segregate between additional work at contract price, agreed price and force account.) Unless otherwise stated, rates for rental of equipment cover only such time as equipment is actually used and no allowance will be made for idle time. This last percentage shown is the net accumulated increase or decrease from the original quantity in the Engineer's Estimate.

Extra Work at Lump Sum:

Perform all work shown on the revised plan sheets of Sheets No. 2 through 20 of Change Order No. 140, Supplement No. 2 and the original plan sheets and specifications as shown on Sheets No. 3 through 84 of Change Order No. 140 for the construction of the concrete deck for the steel truss of the East Tie-In portion of the Temporary Bypass Structure (Bridge No. 34-0006 (TEMP)).

For this work, the Contractor shall be compensated a lump sum of $2,389,940.00. Except for the items of work specifically excluded below, this sum constitutes full and final compensation, including all markups, for all costs associated with the work of this change.

Compensation paid under this change order is based on a 4-stage pour sequence as defined by the Department's response to Request for Information No. 000150.

All work associated with furnishing and installing the joint seal assemblies for the expansion joints at the center of the uppe and lower concrete decks is included in the lump sum compensation provided under this change order.

All work associated with constructing the Type 732 concrete barrier (including all barrier reinforcing steel both in the barrier and the concrete deck), furnishing and installing the Bent 52A and Pier E1 expansion joints, expansion joint steel barriers, and permanent bearings, is excluded from this change order. Any costs associated with these items of work shall be paid under separate change orders.

All work associated with the implementation and maintenance of the Contractor's Storm Water Pollution Prevention Plan and erosion control, including concrete washouts, shall be paid by the Department separately from this change order.

Flagging costs associated with this work shall be paid under Change Order No. 1 with these costs being paid at 50% by the Department. The remaining flagging costs are considered to be included in the lump sum compensation provided under this change order.

The compensation provided under this change order is based on the construction of the concrete decks being performed under a daily double shift schedule in an effort to support the placement of traffic on the Temporary Bypass Structure by September 8, 2009.

The Engineer shall establish lines and grades required for the completion of this work in accordance with Section 5-1.07 of the Standard Specifications.

Consideration of a time adjustment will be deferred until completion of the work specified herein. Determination of a commensurate time extension will be made in accordance with Section 8-1.07, "Liquidated Damages", of the Standard Specifications and Section 10-1.20 "Time Related Overhead (TRO)" of the Special Provisions.

Compensation for delays resulting from this work will be made in accordance with Section 8-1.09 "Right of Way Delays" of the Standard Specifications and Section 10-1.20 "Time Related Overhead" of the Special Provisions.

Total Cost of Extra Work at Lump Sum $2,389,940.00

CONTRACT CHANGE ORDER

Change Requested by: Engineer

CCO 153	Suppl. No. 0	Contract No. 04 - 0120R4	Road SF-80-12.6/13.2	FED. AID LOC.: ACBRIM-080-1(097)N

All payment clauses contained within the specifications cited under this change order are superseded by the agreed lump sum payment method specified above.

Estimated Cost: Increase ☑ Decrease ☐ **$2,389,940.00**

By reason of this order the time of completion will be adjusted as follows: Deferred

Submitted by

Signature	Resident Engineer	Date
	BILL CASEY	6-4-09

Approval Recommended by

Signature	SFOBB Construction Manager	Date
Mike Forner	MIKE FORNER	6-5-09

Engineer Approval by

Signature	SFOBB Construction Manager	Date
Mike Forner	MIKE FORNER	7-6-09

We the undersigned contractor, have given careful consideration to the change proposed and agree, if this proposal is approved, that we will provide all equipment, furnish the materials, except as may otherwise be noted above, and perform all services necessary for the work above specified, and will accept as full payment therefor the prices shown above.

NOTE: If you, the contractor, do not sign acceptance of this order, your attention is directed to the requirements of the specifications as to proceeding with the ordered work and filing a written protest within the time therein specified.

Contractor Acceptance by

Signature	(Print name and title)	Date
D E Hinick	DANIEL E. HINICK, PRESIDENT	7/02/09

STATE OF CALIFORNIA - DEPARTMENT OF TRANSPORTATION

CONTRACT CHANGE ORDER MEMORANDUM

TO: MIKE FORNER / DEANNA VILCHECK	FILE: E.A. 04 - 0120R4
	CO-RTE-PM SF-80-12.6/13.2
FROM: BILL CASEY	FED. NO. ACBRIM-080-1(097)N
CCO#: 153 SUPPLEMENT#: 0 Category Code: CHPT	CONTINGENCY BALANCE (incl. this change) $48,492,583.59
COST: $2,389,940.00 INCREASE ☑ DECREASE ☐	HEADQUARTERS APPROVAL REQUIRED? ☑ YES ☐ NO
SUPPLEMENTAL FUNDS PROVIDED: $0.00	IS THIS REQUEST IN ACCORDANCE WITH ENVIRONMENTAL DOCUMENTS? ☑ YES ☐ NO
CCO DESCRIPTION: Construct ETI Concrete Deck	**PROJECT DESCRIPTION:** CONSTRUCT ROUTE 80 TEMP BYPASS STRUCTURE

Original Contract Time:	Time Adj. This Change:	Previously Approved CCO Time Adjustments:	Percentage Time Adjusted: (including this change)	Total # of Unreconciled Deferred Time CCO(s): (including this change)
475 Day(s)	DEF Day(s)	1195 Day(s)	252 %	8

THIS CHANGE ORDER PROVIDES FOR:
the construction of the concrete decks of the East Tie-In structure.

This project, the Temporary Bypass Structure (TBS), was awarded in March 2004 to construct a detour that will allow for the tie in of the new east span of the San Francisco Oakland Bay Bridge to Yerba Buena Island. The TBS encompasses three main structures, the East Tie-In (ETI) to the existing bridge, the West Tie-In to Yerba Buena Island and the Viaduct structure between the two tie ins.

The original contract was awarded as a performance based contract with the contractor responsible for the design of the structures based upon meeting specified design criteria. The Department issued a December 14, 2006 memo entitled Strategy for South-South Detour Contract Completion which was approved by Tony Anziano (Toll Bridge Program Manager), Richard Land (Chief Engineer) and subsequently by the Toll Bridge Program Oversight Committee. This memo recommended that the design of the ETI structure be assumed by the Department as opposed to the as-bid performance based contractor design.

The new design of the ETI structure provides for a roll-out / roll-in concept with a new double deck steel truss span being erected adjacent to the existing span and then rolled into place after the existing span is rolled out.

Contract Change Order No. 90 provided for the elimination of the planned ETI structure that was covered under a lump sum contract bid item and Contract Change Orders No. 112, No. 129, and No. 140 provided for the fabrication and erection of the ETI truss. This change order provides for the construction of the upper and lower concrete decks of that steel truss.

The work encompassed under this change includes the placement of approximately 940 cubic meters of concrete, 310,000 kilograms of reinforcing steel, and 2 joint seal assemblies that provide flexibility in the center of the deck in order to alleviate excessive stresses during the roll in of the structure. The work will take place approximately 150 feet in the air with limited access to the structure and will be performed on a double shift schedule in order to help meet the planned roll in date during Labor Day Weekend of 2009.

Compensation shall be paid as extra work at an agreed lump sum price of $2,389,940.00, which shall be financed from the contract's contingency funds. A cost analysis is on file.

The cost of constructing the concrete barrier, expansion joints, and bearings at the Bent 52A and Pier E1 supports shall be paid under separate change orders as costs associated with these items of work have not been determined to date.

Adjustment of contract time is deferred pending completion of the work specified in this change as it may become the controlling operation in accordance with Section 8-1.07 "Liquidated Damages", of the Standard Specifications and Section 10-1.20 "Time Related Overhead (TRO)" of the Special Provisions.

Compensation for delays resulting from this work will be made in accordance with Section 8-1.09 "Right of Way Delays" of the Standard Specifications and Section 10-1.20 "Time Related Overhead" of the Special Provisions.

This change was concurred by Alec Melkonians - Asst. Project Manager, Hong Wong - Project Engineer, Lina Ellis - Maintenance, and Patrick Treacy - HQ Asst. Construction Coordinator. TBPOC Approval granted on June 4, 2009.

ADA Notice: For individuals with sensory disabilities, this document is available in alternate formats. For information call: (916) 654-6410 or TDD (916) 654-3880 or write Records and Forms Management, 1120 N Street, MS-89, Sacramento, CA 95814.

RECEIVED
JUL 14 09
0107136

CONCURRED BY:		
Construction Engineer:	Bill Casey, Resident Engineer	Date 6-4-09
Bridge Engineer:	Mike Whiteside	Date 4-8-08
Project Engineer:	Hong Wong, PE	Date 6-5-09
Project Manager:	Alec Melkonians	Date 6-4-09
FHWA Rep.:		Date
Environmental:		Date
Other (specify):	Patrick Treacy, HQ Asst.Const.Co	Date 6-4-09
Other (specify):	Lina Ellis - Maintenance	Date 6-9-09
District Prior Approval By:		Date
HQ (Issue Approve) By:	Bob Molera, HQ CCO Engineer	Date 6/23/09
Resident Engineer's Signature:		Date

6-4-09

ESTIMATE OF COST

	THIS REQUEST	TOTAL TO DATE
ITEMS	$0.00	$0.00
FORCE ACCOUNT	$0.00	$0.00
AGREED PRICE	$2,389,940.00	$2,389,940.00
ADJUSTMENT	$0.00	$0.00
TOTAL	$2,389,940.00	$2,389,940.00

FEDERAL PARTICIPATION

☐ PARTICIPATING ☐ PARTICIPATING IN PART ☑ NONE
☐ NON-PARTICIPATING (MAINTENANCE) ☐ NON-PARTICIPATING

FEDERAL SEGREGATION (if more than one Funding Source or P.I.P. type)
☐ CCO FUNDED PER CONTRACT ☐ CCO FUNDED AS FOLLOWS

FEDERAL FUNDING SOURCE	PERCENT

ADA Notice: For individuals with sensory disabilities, this document is available in alternate formats. For information call: (916) 654-6410 or TDD (916) 654-3880 or write

CONTRACT CHANGE ORDER

Change Requested by: Engineer

CCO 154	Suppl. No. 1	Contract No. 04 - 0120R4	Road SF-80-12.6/13.2	FED. AID LOC.: ACBRIM-080-1(097)N

To: CC MYERS INC

You are directed to make the following changes from the plans and specifications or do the following described work not included in the plans and specifications for this contract. ***NOTE: This change order is not effective until approved by the Engineer.***

Description of work to be done, estimate of quantities and prices to be paid. (Segregate between additional work at contract price, agreed price and force account.) Unless otherwise stated, rates for rental of equipment cover only such time as equipment is actually used and no allowance will be made for idle time. This last percentage shown is the net accumulated increase or decrease from the original quantity in the Engineer's Estimate.

Adjustment of Compensation at Lump Sum:

Pursuant to Section 10-1, "General", subsection "Piling" of Contract Change Order No. 90 Special Provisions, the Contract will credit the Department $2183.17 for the anomaly found at East Tie-In Footings A6W West Pile and Bent 52A South Pile #1.

The A6W West Pile anomaly representing 17% of the cross section area between elevations -9.6 meters to -24.9 meters accredits the Department $1183.02.

The Bent 52A South Pile #1 anomaly representing 20% of the cross section area between elevations -5.3 meters to -16.00 meters accredits the Departments $1000.15.

The $2183.17 credit to the Department constitutes full and complete credit, including mark-ups, for the above mentioned pile anomalies.

Estimated cost of Adjustment of Compensation at Lump Sum .....($2,183.17)

Estimated Cost: Increase ☐ Decrease ☑ **($2,183.17)**

By **reason of this order the time of completion will be adjusted as follows:** 0 days

Submitted by

Signature	Resident Engineer	Date
	BILL CASEY	8-29-08

Approval Recommended by

Signature	Area Construction Manager	Date
Deanna Vilcheck	DEANNA VILCHECK	9/3/08

Engineer Approval by

Signature	Area Construction Manager	Date
Deanna Vilcheck	DEANNA VILCHECK	9/3/08

We the undersigned contractor, have given careful consideration to the change proposed and agree, if this proposal is approved, that we will provide all equipment, furnish the materials, except as may otherwise be noted above; and perform all services necessary for the work above specified, and will accept as full payment therefor the prices shown above.

NOTE: If you, the contractor, do not sign acceptance of this order, your attention is directed to the requirements of the specifications as to proceeding with the ordered work and filing a written protest within the time therein specified.

Contractor Acceptance by

Signature	(Print name and title)	Date
	STEVE FRANCIS, CHIEF ESTIMATOR	11-3-08

CONTRACT CHANGE ORDER

Change Requested by: Engineer

CCO 154	Suppl. No. 1	Contract No. 04 - 0120R4	Road SF-80-12.6/13.2	FED. AID LOC.: ACBRIM-080-1(097)N

To: CC MYERS INC

You are directed to make the following changes from the plans and specifications or do the following described work not included in the plans and specifications for this contract. ***NOTE: This change order is not effective until approved by the Engineer.***

Description of work to be done, estimate of quantities and prices to be paid. (Segregate between additional work at contract price, agreed price and force account.) Unless otherwise stated, rates for rental of equipment cover only such time as equipment is actually used and no allowance will be made for idle time. This last percentage shown is the net accumulated increase or decrease from the original quantity in the Engineer's Estimate.

Adjustment of Compensation at Lump Sum:

Pursuant to Section 10-1, "General", subsection "Piling" of Contract Change Order No. 90 Special Provisions, the Contract will credit the Department $2183.17 for the anomaly found at East Tie-In Footings A6W West Pile and Bent 52A South Pile #1.

The A6W West Pile anomaly representing 17% of the cross section area between elevations -9.6 meters to -24.9 meters accredits the Department $1183.02.

The Bent 52A South Pile #1 anomaly representing 20% of the cross section area between elevations -5.3 meters to -16.00 meters accredits the Departments $1000.15.

The $2183.17 credit to the Department constitutes full and complete credit, including mark-ups, for the above mentioned pile anomalies.

Estimated cost of Adjustment of Compensation at Lump Sum .....($2,183.17)

Estimated Cost: Increase ☐ Decrease ☑ **($2,183.17)**

By **reason of this order the time of completion will be adjusted as follows:** 0 days

Submitted by

Signature	Resident Engineer	Date
	BILL CASEY	8-29-08

Approval Recommended by

Signature	Area Construction Manager	Date
Deanna Vilcheck	DEANNA VILCHECK	9/3/08

Engineer Approval by

Signature	Area Construction Manager	Date
Deanna Vilcheck	DEANNA VILCHECK	9/3/08

We the undersigned contractor, have given careful consideration to the change proposed and agree, if this proposal is approved, that we will provide all equipment, furnish the materials, except as may otherwise be noted above; and perform all services necessary for the work above specified, and will accept as full payment therefor the prices shown above.

NOTE: If you, the contractor, do not sign acceptance of this order, your attention is directed to the requirements of the specifications as to proceeding with the ordered work and filing a written protest within the time therein specified.

Contractor Acceptance by

Signature	(Print name and title)	Date
	STEVE FRANCIS, CHIEF ESTIMATOR	11-3-08

STATE OF CALIFORNIA - DEPARTMENT OF TRANSPORTATION

CONTRACT CHANGE ORDER

Change Requested by: Engineer

CCO 155	Suppl. No. 0	Contract No. 04 - 0120R4	Road SF-80-12.6/13.2	FED. AID LOC.: ACBRIM-080-1(097)N

To: CC MYERS INC

You are directed to make the following changes from the plans and specifications or do the following described work not included in the plans and specifications for this contract. ***NOTE: This change order is not effective until approved by the Engineer.***

Description of work to be done, estimate of quantities and prices to be paid. (Segregate between additional work at contract price, agreed price and force account.) Unless otherwise stated, rates for rental of equipment cover only such time as equipment is actually used and no allowance will be made for idle time. This last percentage shown is the net accumulated increase or decrease from the original quantity in the Engineer's Estimate.

Extra Work at Force Account:

As authorized by the Engineer, provide for the transportation and off-site disposal of excess soil from the footing excavations pertaining to Bents W7L and W7R of the Yerba Buena Island Transition Structure (Br. No. 34-0006 L/R) and Bent 52A and the skid bents of the East Tie-In portion of the Temporary Bypass Structure (Bridge No. 34-0006 (TEMP)).

Off-haul and disposal of excess soil pertaining to the work under Change Orders No. 64 Supplement No. 1, No.73 and No. 77 at Bent W3L, W3R, W4L, W4R, W5L, W5R, W6L, W6R of YBITS (Br. No. 34-0006 L/R) and Bent W7 of the Yerba Buena Island Eastbound On Ramp Structure (Br. No. 34-0006 R) shall be compensated under the lump sum payments provided under those change orders.

Compensation for delays resulting from this work will be made in accordance with Section 8-1.09 "Right of Way Delays" of the Standard Specifications.

Consideration of a time adjustment will be deferred until completion of the work specified herein. Determination of a commensurate time extension will be made in accordance with Section 8-1.07, "Liquidated Damages", of the Standard Specifications.

Estimated Cost of Extra Work at Force Account $500,000.00

Estimated Cost: **Increase** ☑ **Decrease** ☐ **$500,000.00**

By reason of this order the time of completion will be adjusted as follows: Deferred

Submitted by

Signature	Resident Engineer	Date
	BILL CASEY	8-8-08

Approval Recommended by

Signature	Area Construction Manager	Date
Deanna Vilcheck	DEANNA VILCHECK	8/11/08

Engineer Approval by

Signature	Area Construction Manager	Date
Deanna Vilcheck	DEANNA VILCHECK	9/3/08

We the undersigned contractor, have given careful consideration to the change proposed and agree, if this proposal is approved, that we will provide all equipment, furnish the materials, except as may otherwise be noted above, and perform all services necessary for the work above specified, and will accept as full payment therefor the prices shown above.

NOTE: If you, the contractor, do not sign acceptance of this order, your attention is directed to the requirements of the specifications as to proceeding with the ordered work and filing a written protest within the time therein specified.

Contractor Acceptance by

Signature	(Print name and title)	Date
	DANIEL E. HANICK, PRESIDENT	8/26/08

STATE OF CALIFORNIA - DEPARTMENT OF TRANSPORTATION

CONTRACT CHANGE ORDER

Change Requested by: Engineer

CCO 156	Suppl. No. 0	Contract No. 04 - 0120R4	Road SF-80-12.6/13.2	FED. AID LOC.: ACBRIM-080-1(097)N

To: CC MYERS INC

You are directed to make the following changes from the plans and specifications or do the following described work not included in the plans and specifications for this contract. ***NOTE: This change order is not effective until approved by the Engineer.***

Description of work to be done, estimate of quantities and prices to be paid. (Segregate between additional work at contract price, agreed price and force account.) Unless otherwise stated, rates for rental of equipment cover only such time as equipment is actually used and no allowance will be made for idle time. This last percentage shown is the net accumulated increase or decrease from the original quantity in the Engineer's Estimate.

Adjustment of Compensation at Lump Sum:

Provide compensation to the Contractor for all outstanding costs associated with the following items of work pertaining to the installation of the falsework towers for the steel erection of Span 49 of the Viaduct portion of the Temporary Bypass Structure (Bridge No. 34-0006 (TEMP)) due to the conflicts with existing utilities:

1) Relocate the southern falsework bents due to the conflict with utilities adjacent to the US Coast Guard frontage road. Compensation provided includes all costs associated with the redesign and construction of the falsework foundation bracing (grillage) associated with the required relocation of the foundation piles.

2) Repair the sewer line damaged by the installation of falsework piles for Span 49. Compensation provided includes all costs associated with the sewer line repair, exploratory excavation of the sewer line and all labor and equipment idle time incurred due to the sewer line conflict.

For this work, the Contractor will be compensated a lump sum of $180,820.00. This sum constitutes full and final compensation for all outstanding costs, including all markups, associated with the work of this change.

Total Cost of Adjustment of Compensation at Agreed Lump Sum $180,820.00

Estimated Cost: Increase ☑ Decrease ☐ **$180,820.00**

By **reason of this order the time of completion will be adjusted as follows:** 0 days

Submitted by

Signature	Resident Engineer	Date
	BILL CASEY	8-21-08

Approval Recommended by

Signature	Area Construction Manager	Date
Deanna Vilcheck	DEANNA VILCHECK	8/25/08

Engineer Approval by

Signature	Area Construction Manager	Date
Deanna Vilcheck	DEANNA VILCHECK	9/11/08

We the undersigned contractor, have given careful consideration to the change proposed and agree, if this proposal is approved, that we will provide all equipment, furnish the materials, except as may otherwise be noted above, and perform all services necessary for the work above specified, and will accept as full payment therefor the prices shown above.

NOTE: If you, the contractor, do not sign acceptance of this order, your attention is directed to the requirements of the specifications as to proceeding with the ordered work and filing a written protest within the time therein specified.

Contractor Acceptance by

Signature	(Print name and title)	Date
	Daniel E. Hinck	9/28/08

STATE OF CALIFORNIA - DEPARTMENT OF TRANSPORTATION

CONTRACT CHANGE ORDER

Change Requested by: Engineer

CCO: 157	Suppl. No. 0	Contract No. 04 - 0120R4	Road SF-80-12.6/13.2	FED. AID LOC.: ACBRIM-080-1(097)N

To: **CC MYERS INC**

You are directed to make the following changes from the plans and specifications or do the following described work not included in the plans and specifications for this contract. ***NOTE: This change order is not effective until approved by the Engineer.***

Description of work to be done, estimate of quantities and prices to be paid. (Segregate between additional work at contract price, agreed price and force account.) Unless otherwise stated, rates for rental of equipment cover only such time as equipment is actually used and no allowance will be made for idle time. This last percentage shown is the net accumulated increase or decrease from the original quantity in the Engineer's Estimate.

Extra Work at Force Account:

Design a staircase for the United States Coast Guard from the main base access road up to Quarters 9. The plans and specifications shall comply with all applicable codes and regulations, and shall be prepared and submitted for review and approval by the Department. In addition, the Contractor shall use the previously transmitted preliminary design files (Transmittal No. 05.03.02-001257) as a guide in designing the staircase. If revisions are required, as determined necessary by the Engineer, the Contractor shall revise and resubmit for Department's review and approval.

Additionally, conduct a geotechnical engineering investigation to support the Contractor-designed staircase. This includes but is not limited to jobsite investigations, soil sampling, and preparation of a report to be submitted to the Department.

Construction of the staircase shall be handled in a separate Contract Change Order.

The design and geotechnical work for the staircase shall be paid for by invoice pursuant to Section 9-1.03, Force Account Payment, of the Standard Specifications.

Estimated Cost of Extra Work at Force Account $150,000.00

Estimated Cost: **Increase** ☑ **Decrease** ☐ **$150,000.00**

By reason of this order the time of completion will be adjusted as follows: 0 days

Submitted by

Signature	Resident Engineer	Date
	BILL CASEY	12-4-08

Approval Recommended by

Signature	Area Construction Manager	Date
Deanna Vilcheck	DEANNA VILCHECK	12/5/08

Engineer Approval by

Signature	Area Construction Manager	Date
Deanna Vilcheck	DEANNA VILCHECK	12/30/08

We the undersigned contractor, have given careful consideration to the change proposed and agree, if this proposal is approved, that we will provide all equipment, furnish the materials, except as may otherwise be noted above, and perform all services necessary for the work above specified, and will accept as full payment therefor the prices shown above.

NOTE: If you, the contractor, do not sign acceptance of this order, your attention is directed to the requirements of the specifications as to proceeding with the ordered work and filing a written protest within the time therein specified.

Contractor Acceptance by

Signature	(Print name and title)	Date
	DANIEL E. HIMICK, PRESIDENT	12/12/08

CONTRACT CHANGE ORDER

Change Requested by: Engineer

CCO 158	Suppl. No. 0	Contract No. 04 - 0120R4	Road SF-80-12.6/13.2	FED. AID LOC.: ACBRIM-080-1(097)N

To: CC MYERS INC

You are directed to make the following changes from the plans and specifications or do the following described work not included in the plans and specifications for this contract. ***NOTE: This change order is not effective until approved by the Engineer.***

Description of work to be done, estimate of quantities and prices to be paid. (Segregate between additional work at contract price, agreed price and force account.) Unless otherwise stated, rates for rental of equipment cover only such time as equipment is actually used and no allowance will be made for idle time. This last percentage shown is the net accumulated increase or decrease from the original quantity in the Engineer's Estimate.

Extra Work at Force Account:

As authorized by the Engineer, procure W360 x 196 ASTM A-992 steel piles for the falsework foundation to be used in the bridge removal of the existing steel truss structure (Bridge No. 34-0025) from Pier YB-1 to Pier YB-4.

Any salvage value or disposal costs associated with the materials procured under this change order are deferred.

Estimated Cost of Extra Work at Force Account $980,000.00

Estimated Cost: Increase ☑ Decrease ☐ **$980,000.00**

By reason of this order the time of completion will be adjusted as follows: 0 days

Submitted by

Signature	Resident Engineer	Date
	BILL CASEY	8-20-08

Approval Recommended by

Signature	Area Construction Manager	Date
Deanna Vilcheck	DEANNA VILCHECK	8/25/08

Engineer Approval by

Signature	Area Construction Manager	Date
Deanna Vilcheck	DEANNA VILCHECK	9/12/08

We the undersigned contractor, have given careful consideration to the change proposed and agree, if this proposal is approved, that we will provide all equipment, furnish the materials, except as may otherwise be noted above, and perform all services necessary for the work above specified, and will accept as full payment therefor the prices shown above.

NOTE: If you, the contractor, do not sign acceptance of this order, your attention is directed to the requirements of the specifications as to proceeding with the ordered work and filing a written protest within the time therein specified.

Contractor Acceptance by

Signature	(Print name and title)	Date
D E Hanick	DANIEL E. HANICK, PRESIDENT	9/10/08

CONTRACT CHANGE ORDER

Change Requested by: Engineer

CCO 159	Suppl. No. 0	Contract No. 04 - 0120R4	Road SF-80-12.6/13.2	FED. AID LOC.: ACBRIM-080-1(097)N

To: **CC MYERS INC**

You are directed to make the following changes from the plans and specifications or do the following described work not included in the plans and specifications for this contract. ***NOTE: This change order is not effective until approved by the Engineer.***

Description of work to be done, estimate of quantities and prices to be paid. (Segregate between additional work at contract price, agreed price and force account.) Unless otherwise stated, rates for rental of equipment cover only such time as equipment is actually used and no allowance will be made for idle time. This last percentage shown is the net accumulated increase or decrease from the original quantity in the Engineer's Estimate.

Extra Work at Lump Sum:

Construct the temporary soil nail wall and soldier pile wall in accordance with the revised plan sheets as shown on Page No. 2 through 5 of this change order (Plan Sheet No. 4R2, 12R2, 12AR2 and 13R2 of 17).

Work includes furnishing, installing and grouting soil nail assemblies; furnishing and placing shotcrete including wire mesh, rebar walers, geocomposite drain and PVC pipe to face of wall; and furnishing and installing soldier piles and timber lagging. Construction of the temporary soil nail and soldier pile walls shall conform to all applicable specifications of Chang Order No. 75.

For this work, the Contractor will be compensated a lump sum of $916,280.00. This sum constitutes full compensation for all costs, including markups, by reason of this change.

Consideration of a time adjustment will be deferred until completion of the work specified herein. Determination of a commensurate time extension will be made in accordance with Section 8-1.07, "Liquidated Damages", of the Standard Specifications and Section 10-1.20 "Time Related Overhead (TRO)" of the Special Provisions.

Compensation for delays resulting from this work will be made in accordance with Section 8-1.09 "Right of Way Delays" of the Standard Specifications and Section 10-1.20 "Time Related Overhead" of the Special Provisions.

Total Cost of Extra Work at Lump Sum $916,280.00

Estimated Cost: **Increase** ☑ **Decrease** ☐ **$916,280.00**

By **reason of this order the time of completion will be adjusted as follows:** Deferred

Submitted by

Signature	Resident Engineer	Date
	BILL CASEY	10-27-08

Approval Recommended by

Signature	Area Construction Manager	Date
Deanna Vilcheck	DEANNA VILCHECK	10/30/08

Engineer Approval by

Signature	Area Construction Manager	Date
Deanna Vilcheck	DEANNA VILCHECK	5/1/09

We the undersigned contractor, have given careful consideration to the change proposed and agree, if this proposal is approved, that we will provide all equipment, furnish the materials, except as may otherwise be noted above, and perform all services necessary for the work above specified, and will accept as full payment therefor the prices shown above.

NOTE: If you, the contractor, do not sign acceptance of this order, your attention is directed to the requirements of the specifications as to proceeding with the ordered work and filing a written protest within the time therein specified.

Contractor Acceptance by

Signature	(Print name and title)	Date
D E Hanick	DANIEL E. HANICK, PRESIDENT	11/19/08

DIST.	COUNTY	ROUTE	KILOMETER POST TOTAL PROJECT	SHEET NO.	TOTAL SHEETS
04	SF	80	12.6/13.2	20R2	33

Caltrans Metric

REGISTERED ENGINEER - CIVIL

PLANS APPROVAL DATE

REGISTERED PROFESSIONAL ENGINEER — A.L. ELY — No. 18880 — Exp. 6-30-09 — CIVIL — STATE OF CALIFORNIA

The State of California or its officers or agents shall not be responsible for the accuracy or completeness of electronic copies of this plan sheet.

T.Y. LIN / MOFFATT & NICHOL
TWO HARRISON STREET
SAN FRANCISCO, CA 94105

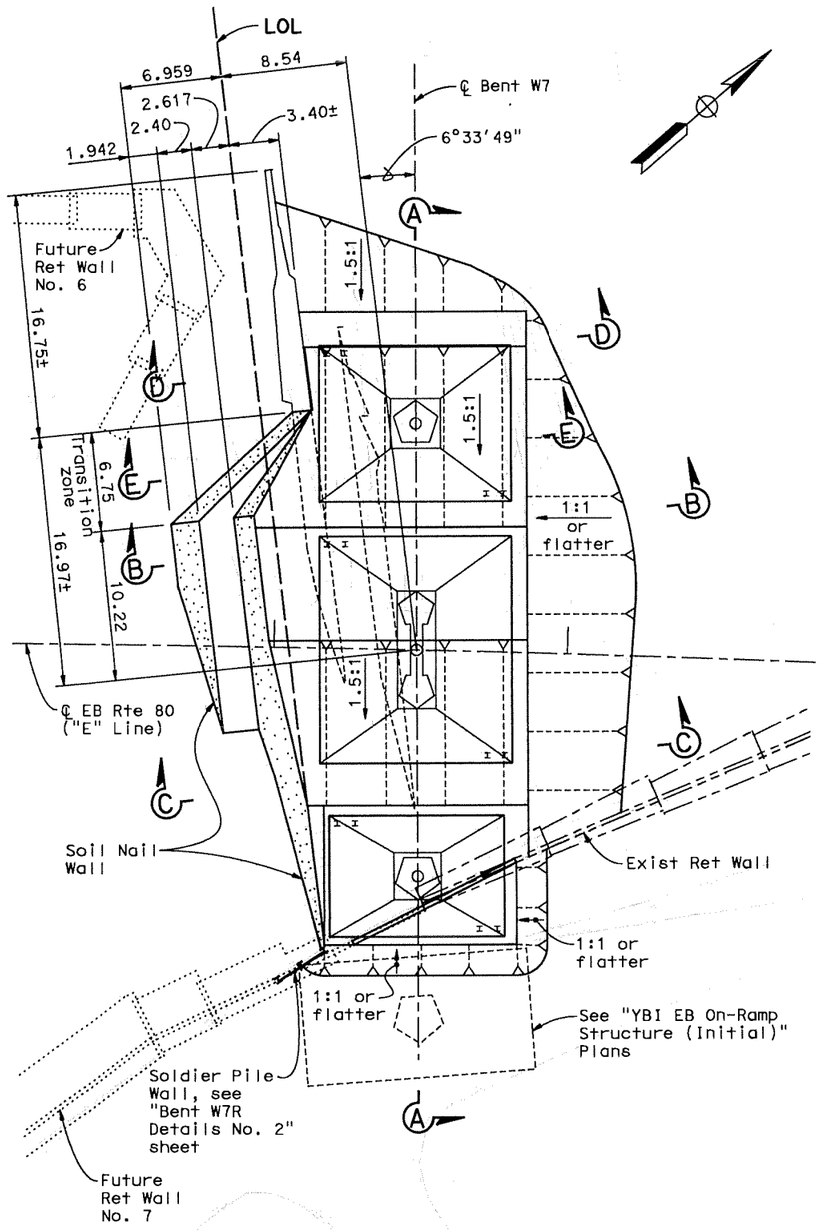

FOUNDATION EXCAVATION PLAN
1:200

Note: Upper 0.6m of existing soil at north footing of Bent W7L is considered hazardous with restricted disposal requirements.

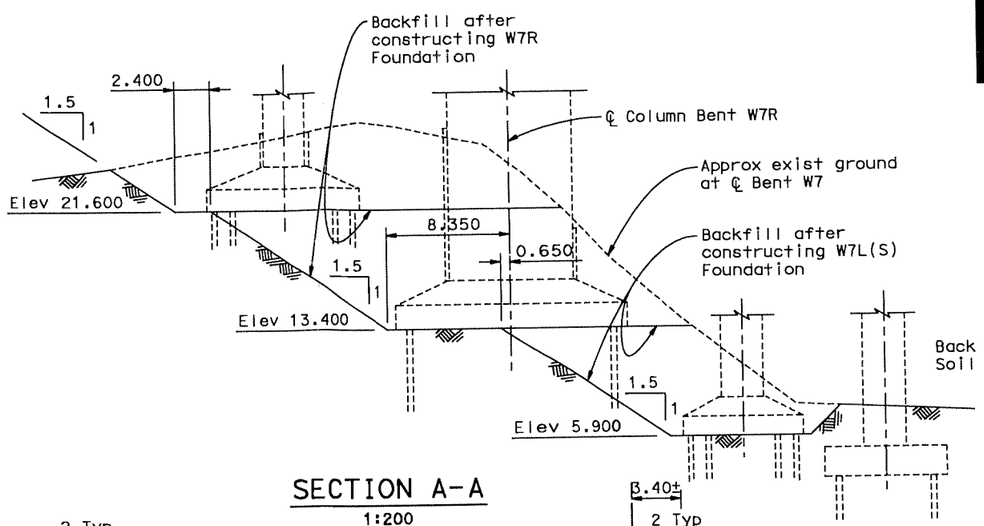

SECTION A-A
1:200

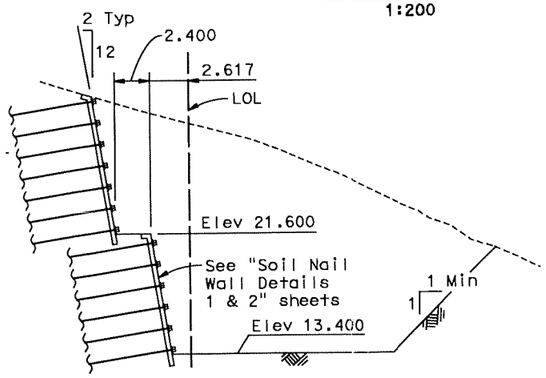

SECTION B-B
1:200

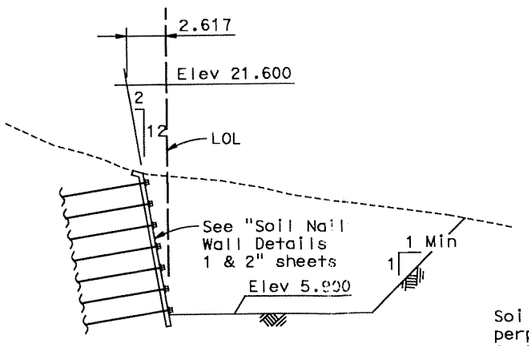

SECTION C-C
1:200

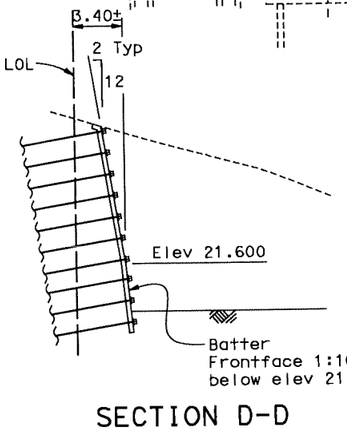

SECTION D-D
1:200

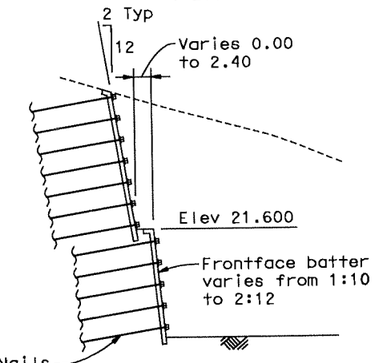

SECTION E-E
(TRANSITION ZONE)
1:200

ALL DIMENSIONS ARE IN METERS UNLESS OTHERWISE SHOWN

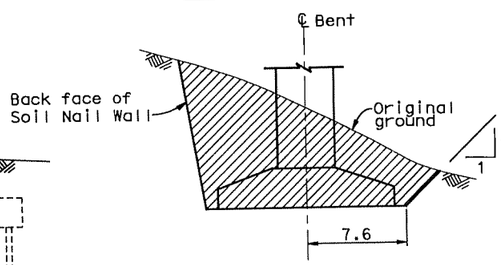

STRUCTURE EXCAVATION

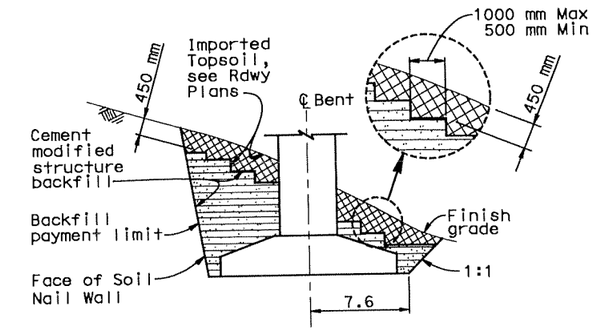

STRUCTURE BACKFILL

Note: Any overexcavation at footings shall be backfilled as shown here for structure backfill.

LIMITS OF PAYMENT FOR STRUCTURE EXCAVATION & BACKFILL

For Details not shown see A62C
NO SCALE

04-0120R4
SUPPLEMENTAL SHEET

CONTRACT CHANGE ORDER NO. 159
SHEET 2 OF 5

SAN FRANCISCO OAKLAND BAY BRIDGE EAST SPAN SEISMIC SAFETY PROJECT

YBI TRANSITION STRUCTURES
ADVANCE CONST PACKAGE NO. 2RO
EXCAVATION PLAN AT BENT W7

DESIGN OVERSIGHT
JOHN MOOK, BERNARD CHAN, JUAN F. CARPIO
SIGN OFF DATE

Rev. Date: 5-18-98

	BY	CHECKED
DESIGN		
DETAILS	van Ryn/Zucchi/Mai	Jain
QUANTITIES	Liao	E. Nichol

PREPARED FOR THE STATE OF CALIFORNIA DEPARTMENT OF TRANSPORTATION

Jal Birdy
PROJECT ENGINEER

BRIDGE NO. 34-0006 L/R
KILOMETER POST 12.8

CU 04251
EA 0120S1

DISREGARD PRINTS BEARING EARLIER REVISION DATES

REVISION DATES (PRELIMINARY STAGE ONLY): 11/04/06 | 11/27/06 | 11/28/06 | 5/29/07 | 5/30/08 | 8/20/08 | 9/4/08 | 9/30/08 | 3/17/08 | 11/04/06

SHEET 4R2 OF 17

ORIGINAL SCALE IN MILLIMETERS FOR REDUCED PLANS 0 10 20 30 40 50 60 70 80 90 100

FILE => p:\4141-06\CADD\TS\Final Const 3\Adv Const Pkg 2RO\Revision 091708\edexc0.dgn

USERNAME => fsamson DATE PLOTTED => 9/17/2008 TIME PLOTTED => 2:28:12 PM

Sept 17, 2008

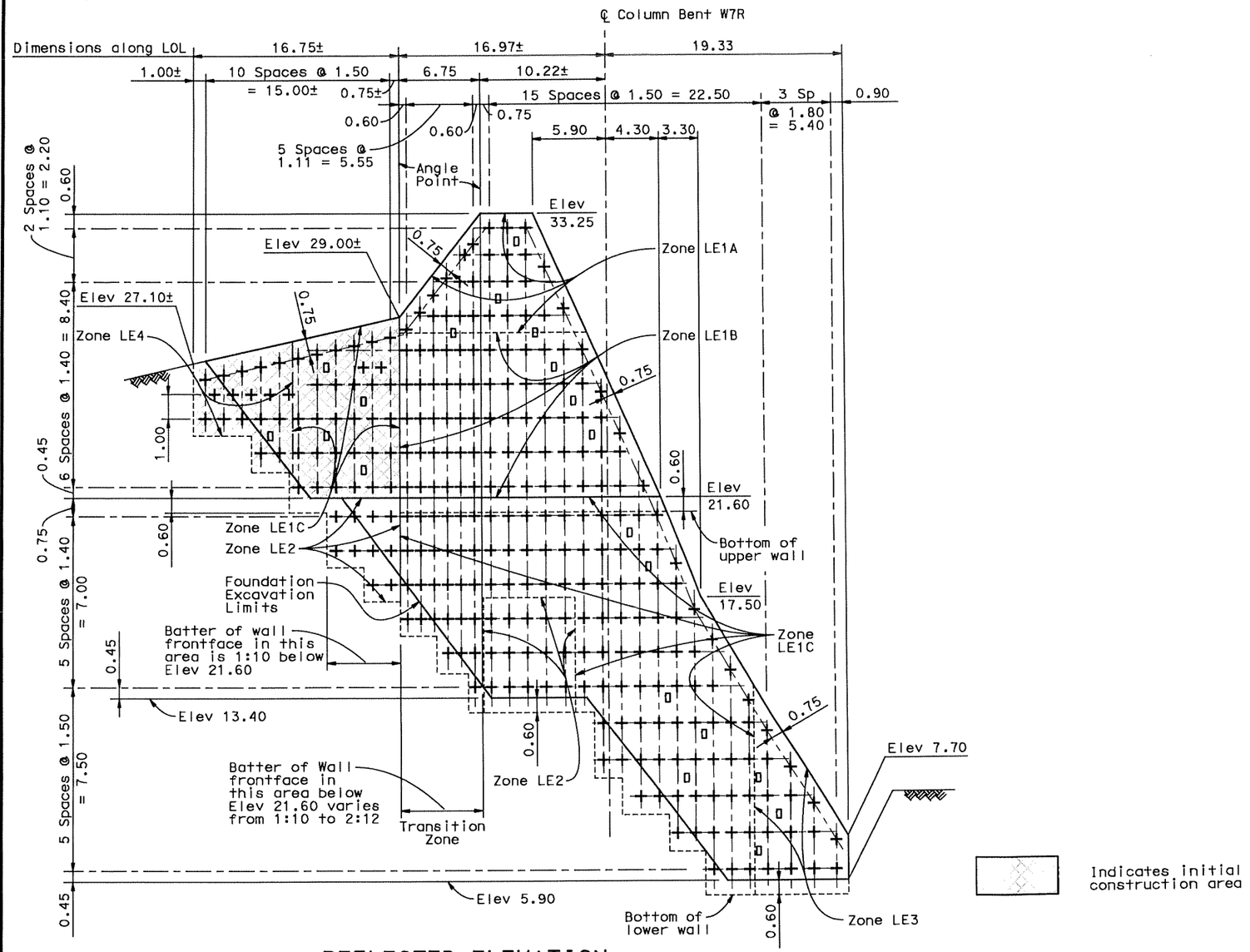

REFLECTED ELEVATION

HORIZ. 1:200
VERT. 1:100

Notes:

1. Exact location of test soil nails to be determined by Engineer in the field. All soil nails to be perpendicular to LOL.
2. For weepholes at Soil Nail Wall, see "Soil Nail Wall Details No. 2" sheet.

\+ Indicates location of soil nail assembly

0 Indicates location of test soil nail

SOIL NAIL EMBEDMENT LENGTHS

LOCATION	Le METERS
Zone LE1A	19.5
Zone LE1B	17.7
Zone LE1C	16.2
Zone LE2	13.2
Zone LE3	11.2
Zone LE4	10.2

Caltrans Metric

DIST.	COUNTY	ROUTE	KILOMETER POST TOTAL PROJECT	SHEET NO.	TOTAL SHEETS
04	SF	80	12.6/13.2	28R2	33

REGISTERED ENGINEER - CIVIL

PLANS APPROVAL DATE

REGISTERED PROFESSIONAL ENGINEER — A.L. ELY — No. 18880 — Exp. 6-30-09 — CIVIL — STATE OF CALIFORNIA

The State of California or its officers or agents shall not be responsible for the accuracy or completeness of electronic copies of this plan sheet.

T.Y. LIN / MOFFATT & NICHOL
TWO HARRISON STREET
SAN FRANCISCO, CA 94105

SOIL NAIL WALL DESIGN DATA

Shotcrete: f'c = 22MPa

Soil Nails: ASTM Designation: A615/A615M, Grade 520
fy = 520MPa

Soil Parameters: Within 10m below top of wall

Unit Weight = 19.3 kN/m3
Soil Friction Angle: 33 degrees
Cohesion: 7.2 kPa
Ultimate Bond Stress = 70 kPa (between soil nail grout & drilled hole)

Other locations

Unit Weight = 19.6 kN/m3
Soil Friction Angle: 35 degrees
Cohesion: 12.0 kPa
Ultimate Bond Stress = 70 kPa (between soil nail grout & drilled hole)

Design Loads:
D = Dead Load
LL = Live Load
E = Lateral Earth Pressure
EQE = Seismic Earth Load = 0.20g

Safety Factors: Minimum Factor Of Safety, DL + LL + E = 1.35
DL + E + EQE = 1.10

04-0120R4
SUPPLEMENTAL SHEET
CONTRACT CHANGE ORDER NO. 159
SHEET 3 OF 5

ALL DIMENSIONS ARE IN METERS UNLESS OTHERWISE SHOWN

SAN FRANCISCO OAKLAND BAY BRIDGE
EAST SPAN SEISMIC SAFETY PROJECT

YBI TRANSITION STRUCTURES

ADVANCE CONST PACKAGE NO. 2R0

SOIL NAIL WALL DETAILS NO. 1

DESIGN OVERSIGHT
JOHN MOOK, BERNARD CHAN, JUAN F. CARPIO
SIGN OFF DATE

DESIGN	BY Desai	CHECKED Jain	
DETAILS	BY van Ryn/Zucchi/Mai	CHECKED Jain	
QUANTITIES	BY Liao	CHECKED E. Nichol	

PREPARED FOR THE STATE OF CALIFORNIA
DEPARTMENT OF TRANSPORTATION

Jal Birdy
PROJECT ENGINEER

BRIDGE NO. 34-0006 L/R
KILOMETER POST 12.8

CU 04251
EA 0120S1

DISREGARD PRINTS BEARING EARLIER REVISION DATES →

REVISION DATES (PRELIMINARY STAGE ONLY): 11/04/06 | 11/27/06 | 11/28/06 | 5/29/07 | 5/30/08 | 8/20/08 | 9/4/08 | 9/24/08 | 9/17/08 | 11/03/08

SHEET 12R2 OF 17

ORIGINAL SCALE IN MILLIMETERS FOR REDUCED PLANS 0 10 20 30 40 50 60 70 80 90 100

Rev. Date: 5-18-98

FILE => p:\4141-06\CADD\TS\Final Const 3\Adv Const Pkg 2R0\Revision 091708\ekmsc01.dgn

USERNAME => tfsamson DATE PLOTTED => 9/17/2008 TIME PLOTTED => 2:28:29 PM

Sept 17, 2008

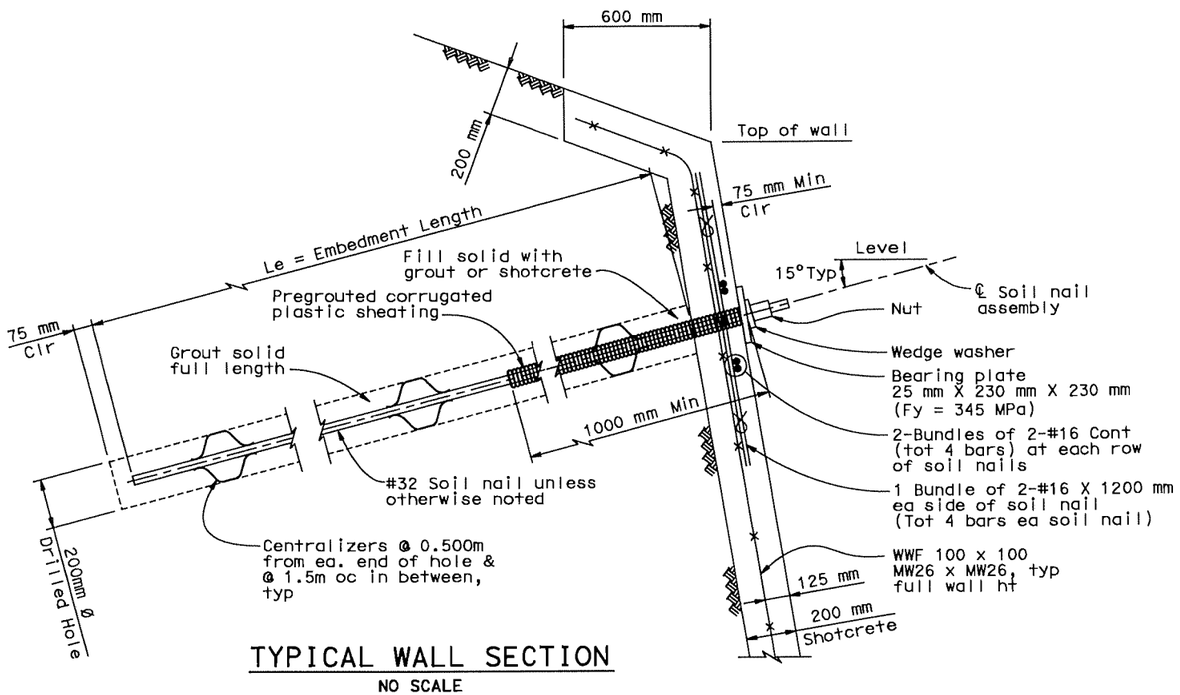

TYPICAL WALL SECTION

NO SCALE

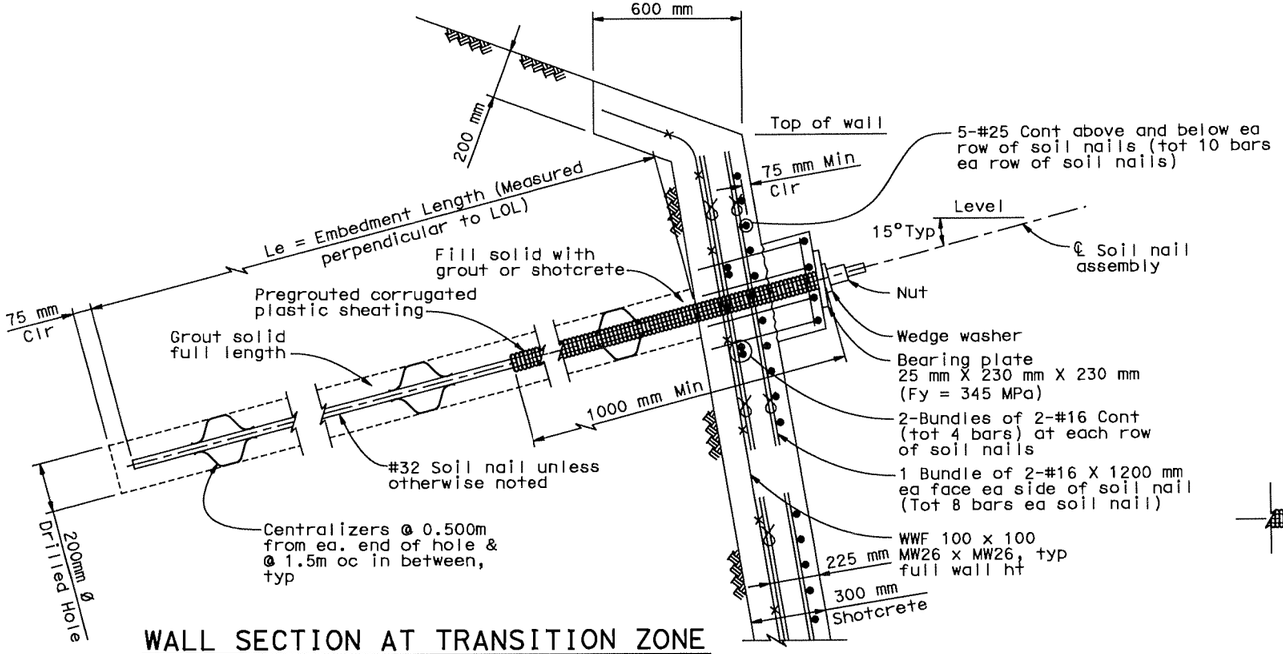

WALL SECTION AT TRANSITION ZONE

NO SCALE

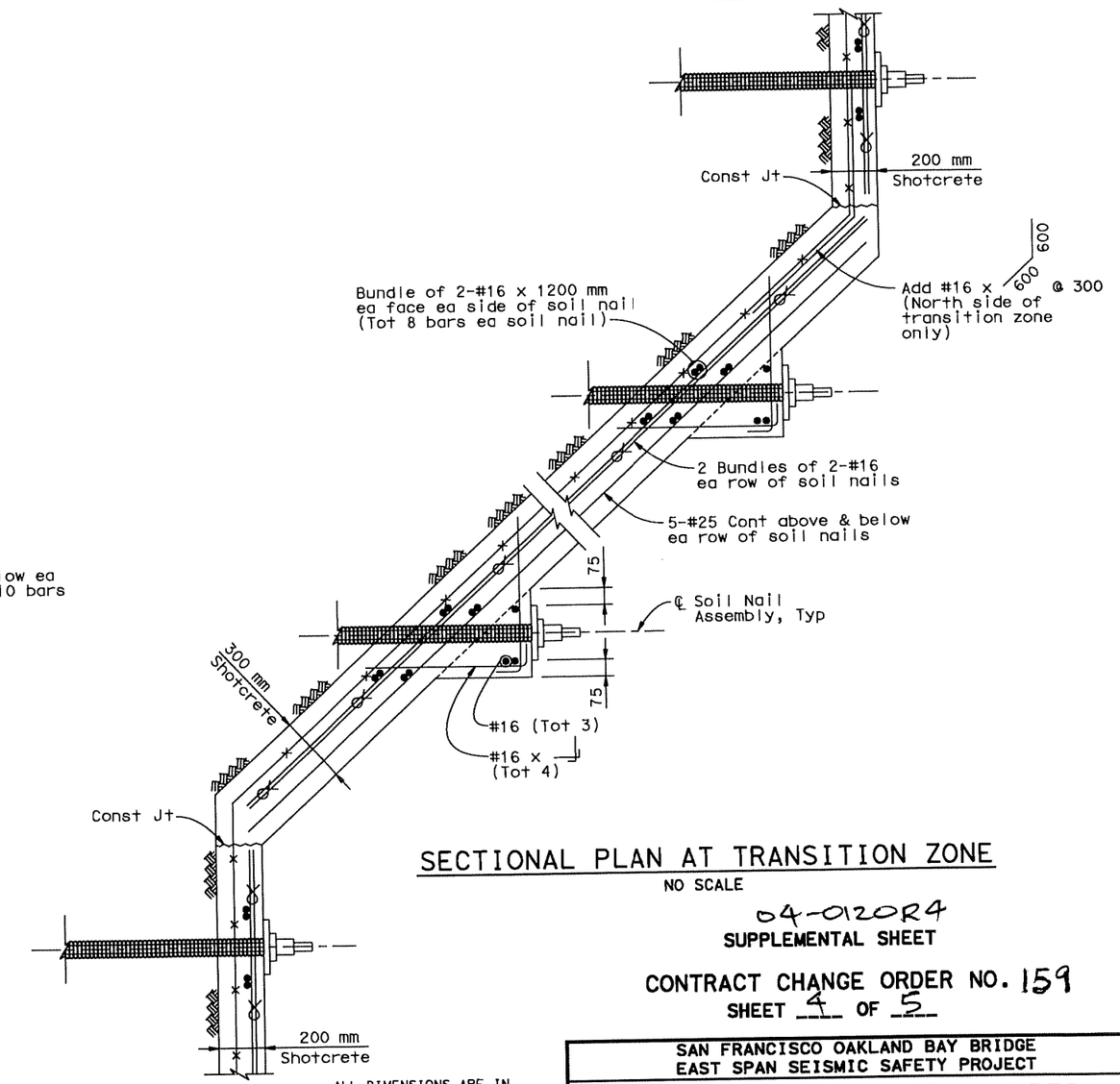

SECTIONAL PLAN AT TRANSITION ZONE

NO SCALE

ALL DIMENSIONS ARE IN
METERS UNLESS OTHERWISE SHOWN

04-0120R4

SUPPLEMENTAL SHEET

CONTRACT CHANGE ORDER NO. 159

SHEET 4 OF 5

DIST	COUNTY	ROUTE	KILOMETER POST TOTAL PROJECT	SHEET NO.	TOTAL SHEETS
04	SF	80	12.6/13.2	28AR2	33

Caltrans Metric

REGISTERED ENGINEER - CIVIL

REGISTERED PROFESSIONAL ENGINEER — A.L. ELY — No. 18880 — Exp. 6-30-09 — CIVIL — STATE OF CALIFORNIA

PLANS APPROVAL DATE

The State of California or its officers or agents shall not be responsible for the accuracy or completeness of electronic copies of this plan sheet.

T.Y. LIN / MOFFATT & NICHOL
TWO HARRISON STREET
SAN FRANCISCO, CA 94105

DESIGN OVERSIGHT
JOHN MOOK, BERNARD CHAN, JUAN F. CARPIO

SIGN OFF DATE

Rev. Date: 5-15-98

DESIGN	BY Desai	CHECKED Jain	
DETAILS	BY van Ryn/Zucchi/Mai	CHECKED Jain	
QUANTITIES	BY Liao	CHECKED E. Nichol	

ORIGINAL SCALE IN MILLIMETERS FOR REDUCED PLANS 0 10 20 30 40 50 60 70 80 90 100

PREPARED FOR THE STATE OF CALIFORNIA DEPARTMENT OF TRANSPORTATION

Jal Birdy
PROJECT ENGINEER

CU 04251
EA 0120S1

BRIDGE NO. 34-0006 L/R
KILOMETER POST 12.8

DISREGARD PRINTS BEARING EARLIER REVISION DATES →

REVISION DATES (PRELIMINARY STAGE ONLY): 11/21/06 | 11/27/06 | 11/28/06 | 5/23/07 | 5/30/08 | 8/26/08 | 9/4/08 | 9/10/08 | 9/17/08 | 11/20/08

SHEET 12AR2 OF 17

FILE => p:\4141-06\CADD\TS\Final Const 3\Adv Const Pkg 2R0\Revision 091708\ekmsc02.dgn

SAN FRANCISCO OAKLAND BAY BRIDGE
EAST SPAN SEISMIC SAFETY PROJECT

YBI TRANSITION STRUCTURES

ADVANCE CONST PACKAGE NO. 2R0

SOIL NAIL WALL DETAILS NO. 2

Sept 17, 2008

USERNAME => fsamson DATE PLOTTED => 9/17/2008 TIME PLOTTED => 2:28:46 PM

Caltrans Metric

REGISTERED ENGINEER - CIVIL

PLANS APPROVAL DATE

REGISTERED PROFESSIONAL ENGINEER — A.L. ELY — No. 18880 — Exp. 6-30-09 — CIVIL — STATE OF CALIFORNIA

The State of California or its officers or agents shall not be responsible for the accuracy or completeness of electronic copies of this plan sheet.

T.Y. LIN / MOFFATT & NICHOL
TWO HARRISON STREET
SAN FRANCISCO, CA 94105

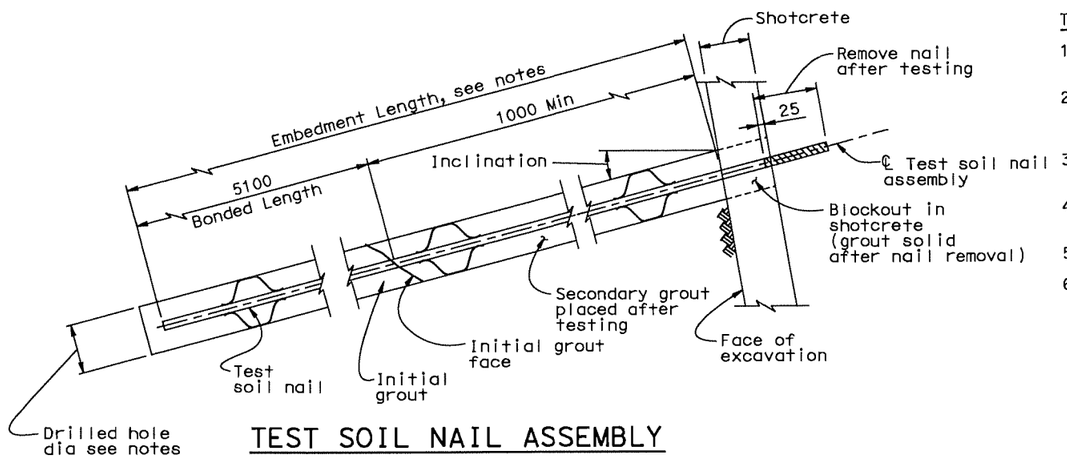

TEST SOIL NAIL ASSEMBLY

NO SCALE

TEST NAIL ASSEMBLY NOTES:

1. Diameter of test soil nail and drilled hole shall be same diameter as adjacent production nails.
2. Embedment length shall be 2/3 the embedment length of adjacent production soil nail assemblies, but not less than 6100 mm.
3. Total length of test soil nail assembly shall be embedment length plus the length required for jacking equipment.
4. The inclination of test soil nail assembly shall be the same as adjacent production soil nail assemblies.
5. The pullout test load for 200mm diameter drilled hole shall be 340 kN.
6. See other sheets for test nail locations. Number of test nails shall be not less than 5 percent of the total number of production nails and each row of each wall shall have at least two test nails. Provide at least 2 test nails for each diameter of production nail.

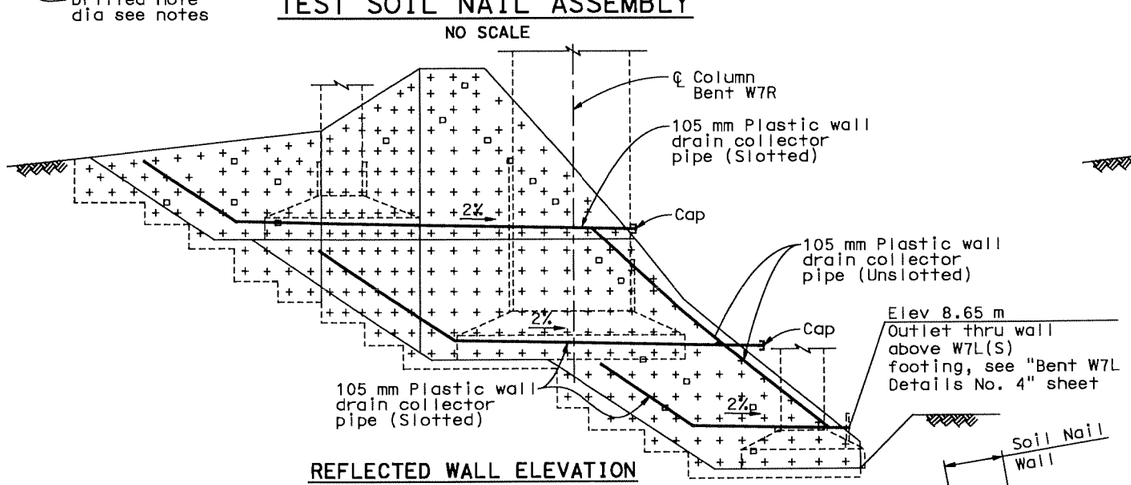

REFLECTED WALL ELEVATION

1:200

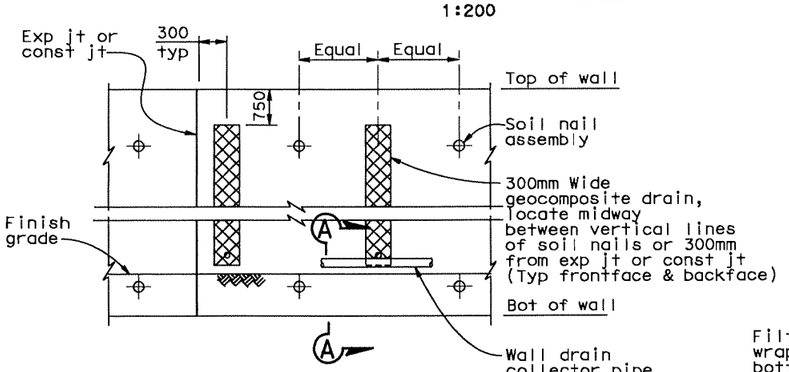

GEOCOMPOSITE DRAIN DETAIL

NO SCALE

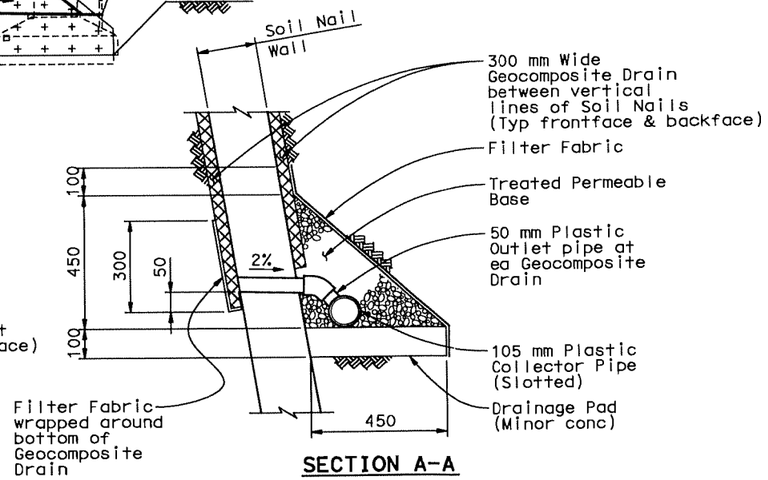

SECTION A-A

1:10

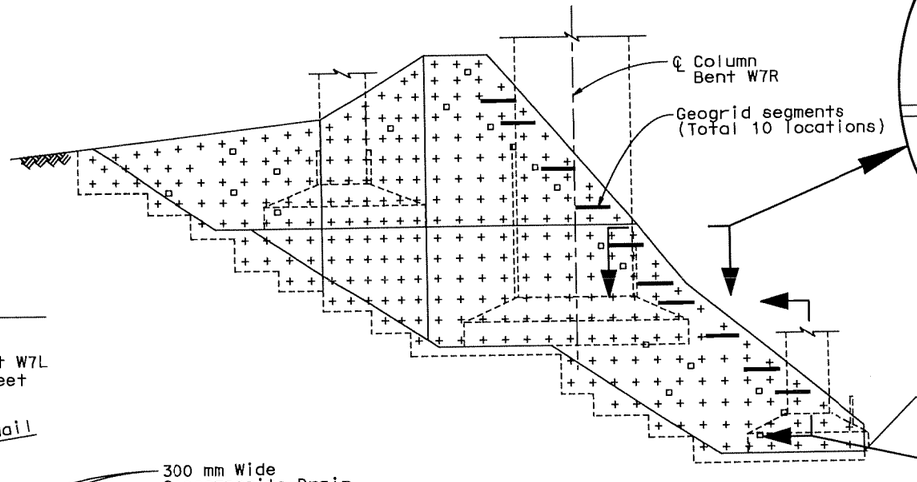

REFLECTED WALL ELEVATION

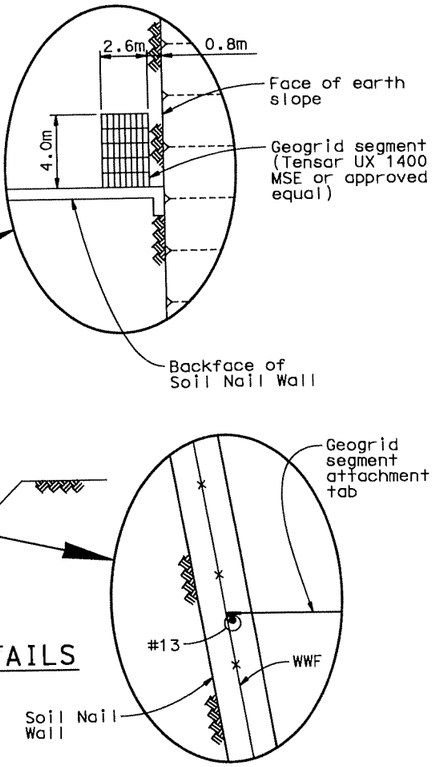

GEOGRID BACKFILL TIE DETAILS

1:200

04-0120R4

SUPPLEMENTAL SHEET

CONTRACT CHANGE ORDER NO. 159
SHEET 5 OF 5

WALL DRAINAGE DETAILS

ALL DIMENSIONS ARE IN MILLIMETERS UNLESS OTHERWISE SHOWN

SAN FRANCISCO OAKLAND BAY BRIDGE
EAST SPAN SEISMIC SAFETY PROJECT

YBI TRANSITION STRUCTURES

ADVANCE CONST PACKAGE NO. 2RO

SOIL NAIL WALL DETAILS NO. 3

DESIGN OVERSIGHT
JOHN MOOK, BERNARD CHAN, JUAN F. CARPIO
SIGN OFF DATE

Rev. Date: 5-18-98

	BY	CHECKED
DESIGN	Desai	Jain
DETAILS	van Ryn/Zucchi/Mai	Jain
QUANTITIES	Liao	E. Nichol

ORIGINAL SCALE IN MILLIMETERS FOR REDUCED PLANS 0 10 20 30 40 50 60 70 80 90 100

PREPARED FOR THE STATE OF CALIFORNIA DEPARTMENT OF TRANSPORTATION

Jal Birdy
PROJECT ENGINEER

CU 04251
EA 0120S1

BRIDGE NO.	34-0006 L/R
KILOMETER POST	12.8

DISREGARD PRINTS BEARING EARLIER REVISION DATES →

REVISION DATES (PRELIMINARY STAGE ONLY): 11/27/06 | 11/27/06 | 11/27/06 | 5/29/07 | 5/29/08 | 8/29/08 | 9/4/08 | 9/30/08 | 9/17/08 | 11/26/08

SHEET 13R2 OF 17

FILE => p:\4141-06\CADD\TS\Final Const 3\Adv Const Pkg 2RO\Revision 091708\ekmsc03.dgn

Sept 17, 2008

TIME PLOTTED => 2:28:59 PM
DATE PLOTTED => 9/17/2008
USERNAME => fsamson

STATE OF CALIFORNIA - DEPARTMENT OF TRANSPORTATION

CONTRACT CHANGE ORDER MEMORANDUM

TO: MIKE FORNER / DEANNA VILCHECK	FILE: **E.A.** 04 - 0120R4
FROM: BILL CASEY	**CO-RTE-PM** SF-80-12.6/13.2
	FED. NO. ACBRIM-080-1(097)N
CCO#: **159** SUPPLEMENT#: **0** Category Code: **CMTX**	CONTINGENCY BALANCE (incl. this change) **$3,188,279.12**
COST: **$916,280.00** INCREASE ☑ DECREASE ☐	HEADQUARTERS APPROVAL REQUIRED? ☑ YES ☐ NO
SUPPLEMENTAL FUNDS PROVIDED: **$0.00**	IS THIS REQUEST IN ACCORDANCE WITH ENVIRONMENTAL DOCUMENTS? ☑ YES ☐ NO
CCO DESCRIPTION: Redesign Bent W7 Soil Nail Wall	**PROJECT DESCRIPTION:** CONSTRUCT ROUTE 80 TEMP BYPASS STRUCTURE

Original Contract Time:	Time Adj. This Change:	Previously Approved CCO Time Adjustments:	Percentage Time Adjusted: (including this change)	Total # of Unreconciled Deferred Time CCO(s): (including this change)
475 Day(s)	**DEF** Day(s)	**1195** Day(s)	**252** %	**8**

THIS CHANGE ORDER PROVIDES FOR:

the revised design and reconstruction of the temporary soil nail wall that allows for the construction of Bent W7.

This contract provides for the construction of a temporary detour for both eastbound and westbound I-80 traffic that allows for the tie in of the east span of the new San Francisco Oakland Bay Bridge (SFOBB) to Yerba Buena Island. The detour will allow for the construction of the permanent Yerba Buena Island Transition Structure (YBITS) that connects the signature SAS structure to Yerba Buena Island.

In order to advance the completion of the YBITS project and potentially allow for an early opening of the new SFOBB, the Department issued a December 25, 2006 memorandum recommending a portion of the YBITS foundation work be performed under this contract by change order. The memorandum was approved by Tony Anziano, Toll Bridge Program Manager, and Richard Land, Chief Engineer.

Based on this Department memorandum, the contract now provides for the construction of the permanent footing and column for Bent W7 of the YBITS project. This work was added under the previously approved Change Order No. 75. As part of that work, the plans call for the construction of a 27 meter high soil nail retaining wall held in place by 275 soil nails. The soil nail wall acts as temporary shoring for the construction of the 3 permanent footings for Bent W7. The wall was designed asymmetrical with a width of 19 meters at the base that widens to 34 meters at the mid-height and then narrows back to 5 meters at the top. The slope of the wall varies from 1:10 to 1:6 as it climbs up the compound slope that it supports.

After clearing and grubbing of the slope was performed, the Department provided survey staking for the soil nail walls construction. This survey was unusually complex in that it had to be placed on a steep slope (approximately 1:1) that fell off in two directions with the stakes having to be placed 30 meters above the planned base of the wall that controlled the layout. The designed slope of the wall, varying from 1:10 to 1:6, and the wall's bench further complicated the layout that required working from the base of the wall and up the existing slope. The placement of the stakes was also complicated due to the existing grade not matching the planned grade at the top of the wall by several feet.

Once the survey was placed, construction of the wall proceeded. Approximately 75% of the wall had been constructed when it was recognized that the Department survey had been placed in error. This resulted in the wall being constructed to the point where its base encroached into the center of the permanent footings for Bent W7. Construction was then suspended pending a revised design.

A revised design has now been provided that allows for the utilization of approximately 20% of the completed wall with the remaining portion of the wall steepened in order to clear the permanent footings and allow for their construction. This change order provides for the revised wall design and compensates the contractor for the additional costs to reconstruct the wall.

It is anticipated that the pending changes to the contract stemming from Change Order No. 75 shall result in a minimum of 6 additional change orders being issued as theses changes are identified and costs are agreed to. Change Orders No. 118, Supplement No. 1, No. 124, No. 126, No. 145, No. 155 and No. 159 have been identified to date. Individual change orders are being assigned as the costs are being quantified and agreed to in order to facilitate the tracking of these items of work. The cost of furnishing and placing cement modified structural backfill and imported topsoil that were deferred under Change Order No. 75 shall be paid under a supplemental change order as specified in Change Order No. 75.

ADA Notice: For individuals with sensory disabilities, this document is available in alternate formats. For information call: (916) 654-6410 or TDD (916) 654-3880 or write Records and Forms Management, 1120 N Street, MS-89, Sacramento, CA 95814.

Compensation shall be paid as extra work at an agreed lump sum of $916,280.00 which shall be financed from the contract's contingency funds. A force account cost analysis is on file.

Adjustment of contract time is deferred pending completion of the work specified in this change as it may become the controlling operation in accordance with Section 8-1.07 "Liquidated Damages", of the Standard Specifications and Section 10-1.20 "Time Related Overhead (TRO)" of the Special Provisions.

Compensation for delays resulting from this work will be made in accordance with Section 8-1.09 "Right of Way Delays" of the Standard Specifications and Section 10-1.20 "Time Related Overhead" of the Special Provisions.

This change was requested by Mike Whiteside - YBI Coordination Engineer per memorandum dated September 18, 2008 and concurred by Hong Wong - Project Engineer and Alec Melkonians - Project Manager.

Maintenance concurrence for this change order is not required, as the wall is a temporary structure and does not affect any permanent roadway.

RECEIVED
09 JUN 29 01:52

CONCURRED BY:		
Construction Engineer:	Bill Casey, Resident Engineer	Date 10/27/08
Bridge Engineer:	Mike Whiteside, Toll Bridge Design	Date 9/18/08
Project Engineer:	Hong Wong, PE	Date 10/23/08
Project Manager:	Alec Melkonians	Date 10/23/08
FHWA Rep.:		Date
Environmental:		Date
Other (specify):		Date
Other (specify):		Date
District Prior Approval By:		Date
HQ (Issue Approve) By:	Bob Molera, HQ CCO Engineer	Date
Resident Engineer's Signature:		Date 10-27-08

ESTIMATE OF COST		
	THIS REQUEST	TOTAL TO DATE
ITEMS	$0.00	$0.00
FORCE ACCOUNT	$0.00	$0.00
AGREED PRICE	$916,280.00	$916,280.00
ADJUSTMENT	$0.00	$0.00
TOTAL	$916,280.00	$916,280.00

FEDERAL PARTICIPATION

☐ PARTICIPATING ☐ PARTICIPATING IN PART ☐ NONE
☐ NON-PARTICIPATING (MAINTENANCE) ☑ NON-PARTICIPATING

FEDERAL SEGREGATION (if more than one Funding Source or P.I.P. type)
☐ CCO FUNDED PER CONTRACT ☐ CCO FUNDED AS FOLLOWS

FEDERAL FUNDING SOURCE PERCENT

ADA Notice: For individuals with sensory disabilities, this document is available in alternate formats. For information call: (916) 654-6410 or TDD (916) 654-3880 or write Records and Forms Management, 1120 N Street, MS-89, Sacramento, CA 95814.

STATE OF CALIFORNIA - DEPARTMENT OF TRANSPORTATION

CONTRACT CHANGE ORDER

Change Requested by: Engineer

CCO 160	Suppl. No. 0	Contract No. 04 - 0120R4	Road SF-80-12.6/13.2	FED. AID LOC.: ACBRIM-080-1(097)N

To: CC MYERS INC

You are directed to make the following changes from the plans and specifications or do the following described work not included in the plans and specifications for this contract. ***NOTE: This change order is not effective until approved by the Engineer.***

Description of work to be done, estimate of quantities and prices to be paid. (Segregate between additional work at contract price, agreed price and force account.) Unless otherwise stated, rates for rental of equipment cover only such time as equipment is actually used and no allowance will be made for idle time. This last percentage shown is the net accumulated increase or decrease from the original quantity in the Engineer's Estimate.

Extra Work at Force Account:

Furnish, fabricate, and deliver material required to implement truss modifications as shown on Sheets 2 through 16 of this change order, at existing Spans YB1, YB3 and YB4.

Payment for this work shall be made in accordance with Sections 4-1.03D, Extra Work, and 9-1.03, Force Account Payment, of the Standards Specifications, as revised and/or amended by the Special Provisions.

Consideration of a time adjustment will be deferred until completion of the work specified herein. Determination of a commensurate time extension will be made in accordance with Section 8-1.07, "Liquidated Damages", of the Standard Specifications and Section 10-1.20 "Time Related Overhead (TRO)" of the Special Provisions.

Compensation for delays resulting from this work will be made in accordance with Section 8-1.09 "Right of Way Delays" of the Standard Specifications and Section 10-1.20 "Time Related Overhead" of the Special Provisions.

Estimated Cost of Extra Work at Force Account $350,000.00

Estimated Cost: Increase ☑ Decrease ☐ $350,000.00

By reason of this order the time of completion will be adjusted as follows: Deferred

Submitted by		
Signature	Resident Engineer BILL CASEY	Date 3-13-09
Approval Recommended by		
Signature Deanna Vilcheck	Area Construction Manager DEANNA VILCHECK	Date 3/20/09
ngineer Approval by		
nature Deanna Vilcheck	Area Construction Manager DEANNA VILCHECK	Date 4/8/09

The undersigned contractor, have given careful consideration to the change proposed and agree, if this proposal is approved, that we will provide all ıment, furnish the materials, except as may otherwise be noted above, and perform all services necessary for the work above specified, and will accept payment therefor the prices shown above.

If you, the contractor, do not sign acceptance of this order, your attention is directed to the requirements of the specifications as to ding with the ordered work and filing a written protest within the time therein specified.

or Acceptance by		
	(Print name and title) DANIEL E. Hamick, PRESIDENT	Date 4/03/09

DIST	COUNTY	ROUTE	KILOMETER POST TOTAL PROJECT	SHEET No	TOTAL
04	SF	80	12.6/13.2		

REGISTERED CIVIL ENGINEER

01-07-09
PLANS APPROVAL DATE

Charles Redfield
No. C 27605
Exp. 12/31/09
CIVIL
STATE OF CALIFORNIA

The State of California or its officers or agents shall not be responsible for the accuracy or completeness of electronic copies of this plan sheet.

T.Y. LIN / MOFFATT & NICHOL
Two Harrison Street, Suite 500
San Francisco, CA 94105

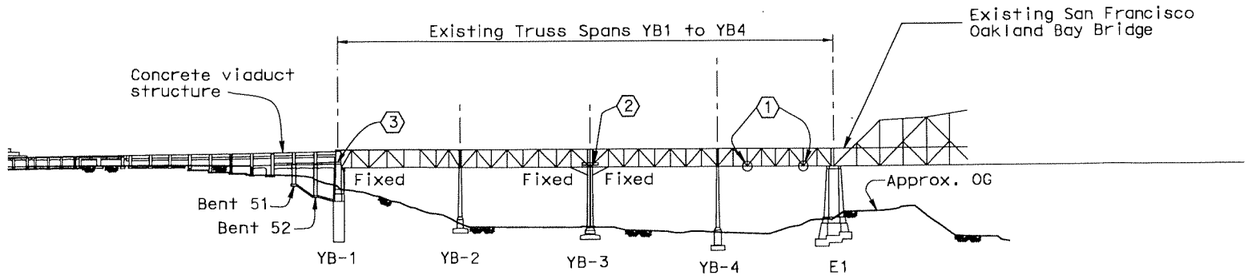

PROJECTED ELEVATION
1:2000

LEGEND:

(1) Strengthen Span YB4 Jacking Points

(2) Add Horizontal Ties across Pier YB-3

(3) Add Horizontal Tie at abutment YB-1

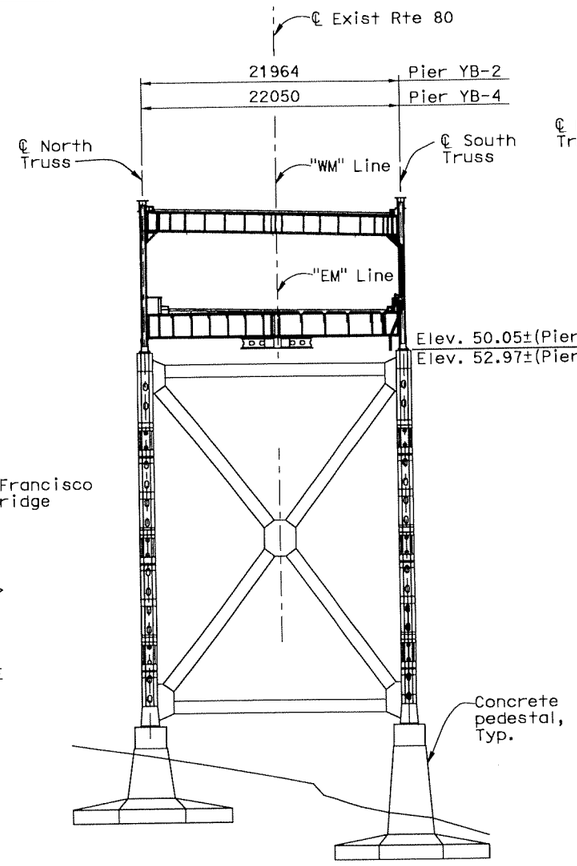

TYPICAL SECTION
1:250

Pier YB-2 shown
pier YB-4 similar

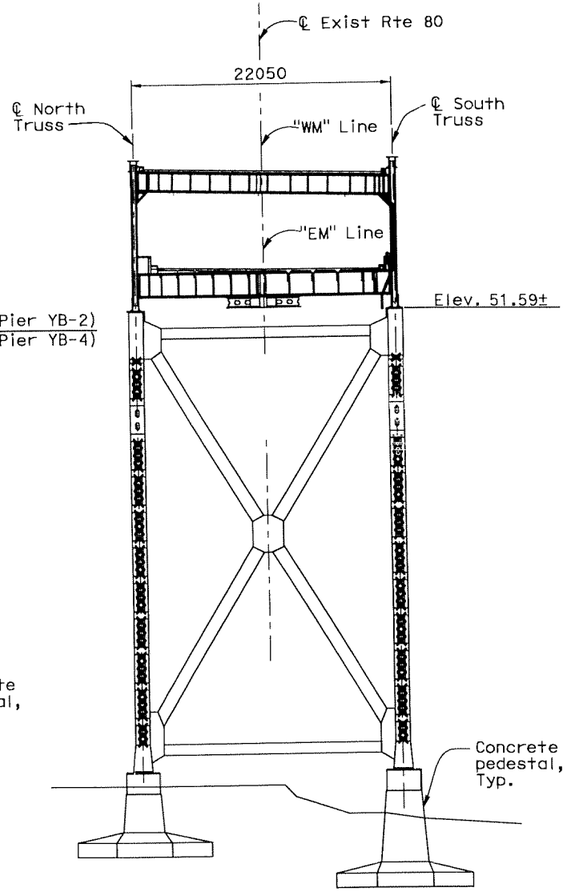

TYPICAL SECTION
1:250

Pier YB-3 shown.

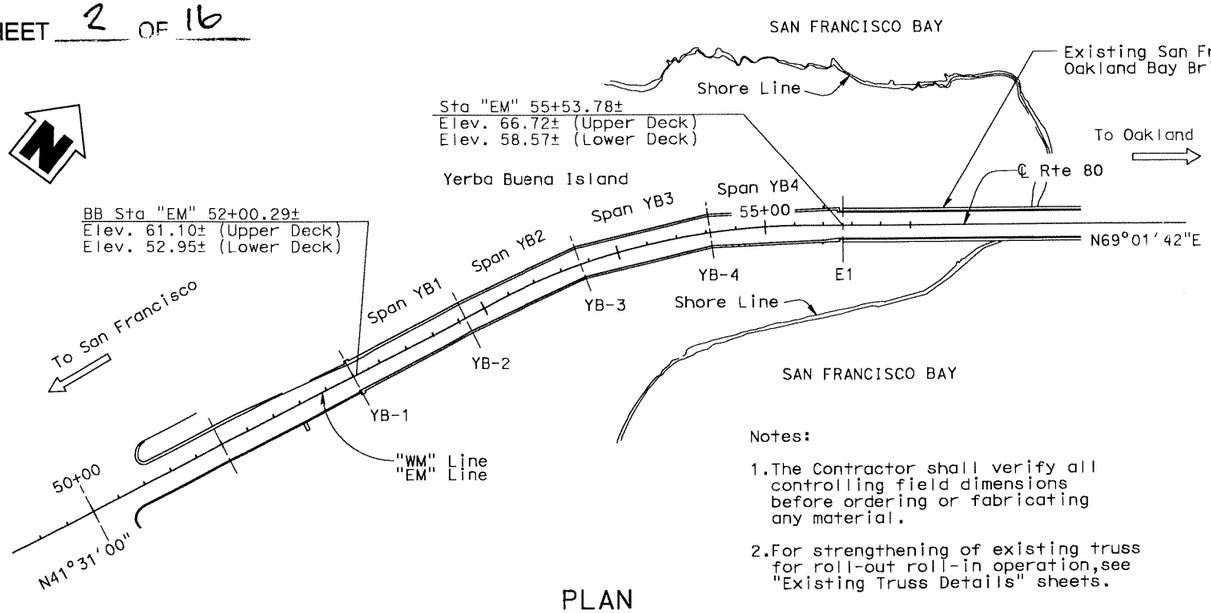

PLAN
1:2000

Notes:

1. The Contractor shall verify all controlling field dimensions before ordering or fabricating any material.
2. For strengthening of existing truss for roll-out roll-in operation, see "Existing Truss Details" sheets.

CONTRACT NO. 64-0120R4

CONTRACT CHANGE ORDER NO 160

SHEET 2 OF 16

ALL DIMENSIONS ARE IN MILLIMETERS UNLESS OTHERWISE SHOWN

SAN FRANCISCO OAKLAND BAY BRIDGE
EAST SPAN SEISMIC SAFETY PROJECT

EAST TIE-IN

EXISTING TRUSS LAYOUT NO. 1

DESIGN	BY C. Redfield	CHECKED A. Lee	PREPARED FOR THE STATE OF CALIFORNIA DEPARTMENT OF TRANSPORTATION
DETAILS	BY A. Sudhausen	CHECKED P. Zhao	
QUANTITIES	BY A. Lee	CHECKED H. Nelson	

DESIGN OVERSIGHT
SIGN OFF DATE

M. Sah
PROJECT ENGINEER
S. Abbas
PROJECT MANAGER

CU
EA 0120R4

BRIDGE NO. 34-0006 (TEMP)
KILOMETER POST 12.6

DISREGARD PRINTS BEARING EARLIER REVISION DATES →

REVISION DATES (PRELIMINARY STAGE ONLY): 11/06/07 01/07/09

SHEET 120 OF 214

DESIGN DETAIL SHEET (METRIC) (REV. 3/1/98)
●DATE● ●TIME● Pen Table File

ORIGINAL SCALE IN MILLIMETERS FOR REDUCED PLANS 0 10 20 30 40 50 60 70 80 90 100

FILE => p:\bb\04-012001\eti\jackpt_det_exist 01-07-09\aleti01.dgn

100% PS&E

USERNAME => pzhao
DATE PLOTTED => 1/20/2009
TIME PLOTTED => 7:27:41 PM
FILE => p:\bb\04-012001\eti\jackpt_det_exist 01-07-09\aleti01.dgn

DIST	COUNTY	ROUTE	KILOMETER POST TOTAL PROJECT	SHEET No	TOTAL
04	SF	80	12.6/13.2		

REGISTERED CIVIL ENGINEER

01-07-09
PLANS APPROVAL DATE

Charles Redfield No. C 27605 Exp. 12/31/09 CIVIL STATE OF CALIFORNIA — REGISTERED PROFESSIONAL ENGINEER

The State of California or its officers or agents shall not be responsible for the accuracy or completeness of electronic copies of this plan sheet.

T.Y. LIN / MOFFATT & NICHOL
Two Harrison Street, Suite 500
San Francisco, CA 94105

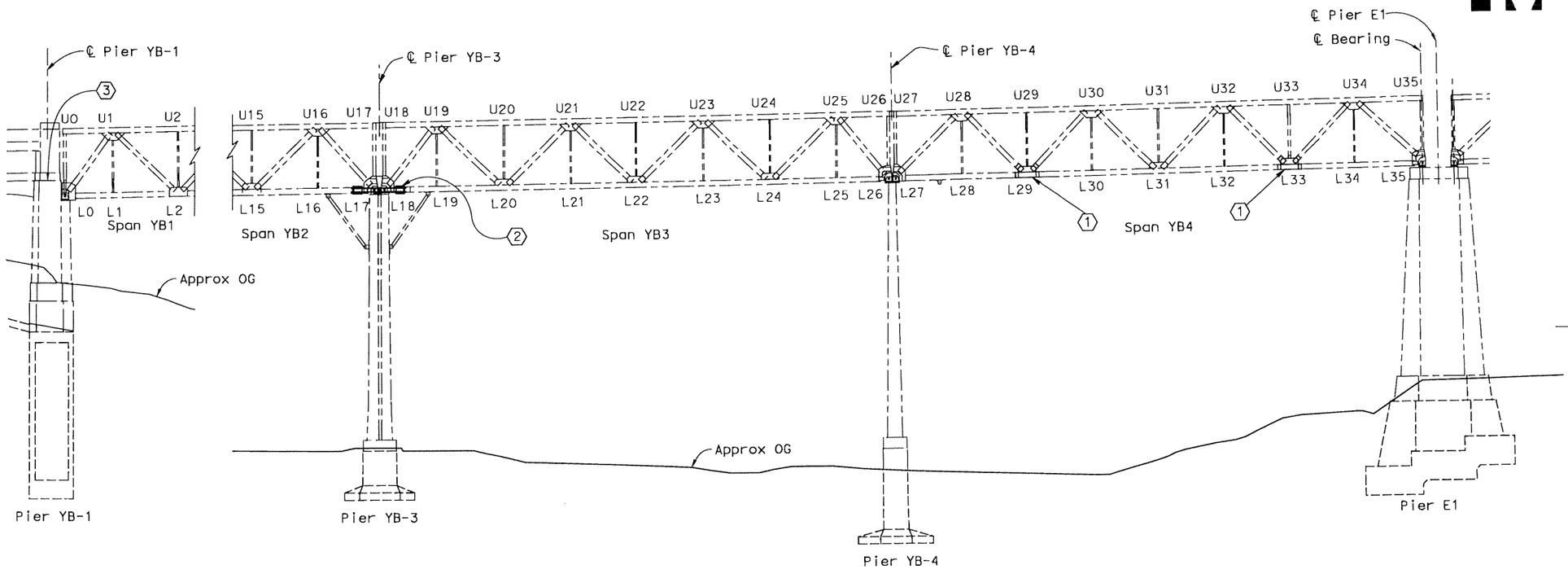

PROJECTED ELEVATION
1:400

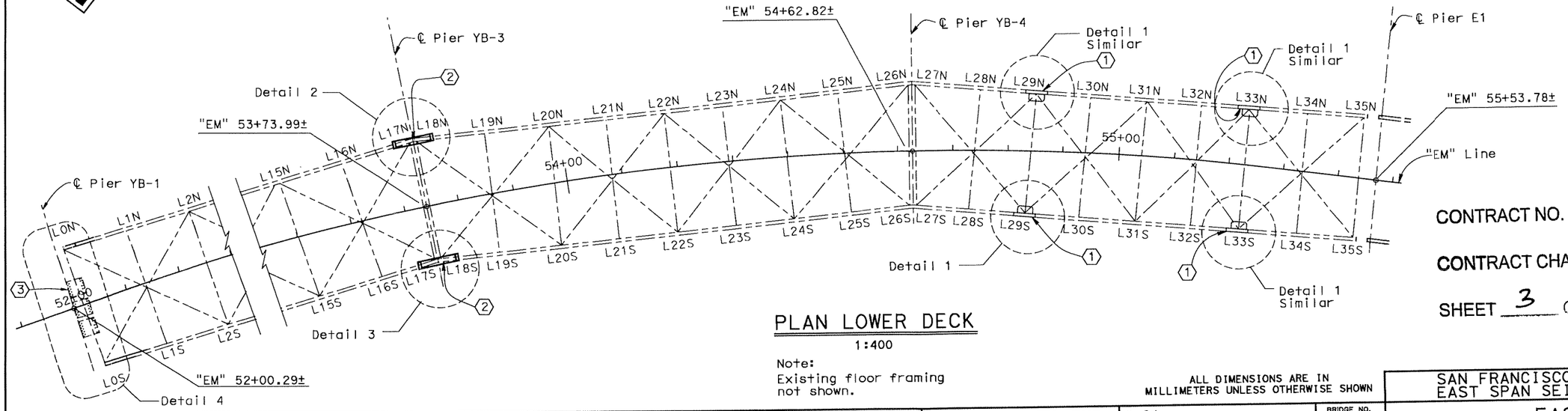

PLAN LOWER DECK
1:400

Note:
Existing floor framing not shown.

LEGEND:

1. Strengthen YB4 jacking points, north and south bottom chords, L29 and L33.
2. Add longitudinal ties across bottom chords at Pier YB-3.
3. Add longitudinal tie at bottom deck at Pier YB-1

——— Indicates existing structure

Notes:

1. The Contractor shall verify all controlling field dimensions before ordering or fabricating any material.
2. For Detail 1, see "Existing Truss Details No. 1" sheet.
3. For Details 2 and 3, see "Existing Truss Details No. 6" sheet.
4. For Details 4, see "Existing Truss Details No. 11" sheet.

CONTRACT NO. 04-0120R4

CONTRACT CHANGE ORDER NO 160

SHEET 3 OF 16

ALL DIMENSIONS ARE IN MILLIMETERS UNLESS OTHERWISE SHOWN

SAN FRANCISCO OAKLAND BAY BRIDGE
EAST SPAN SEISMIC SAFETY PROJECT

EAST TIE-IN

EXISTING TRUSS LAYOUT NO. 2

DESIGN	BY C. Redfield	CHECKED A. Lee	PREPARED FOR THE STATE OF CALIFORNIA DEPARTMENT OF TRANSPORTATION
DETAILS	BY A. Sudhausen	CHECKED P. Zhao	
QUANTITIES	BY A. Lee	CHECKED H. Nelson	

DESIGN OVERSIGHT

SIGN OFF DATE

M. Sah PROJECT ENGINEER
S. Abbas PROJECT MANAGER
CU EA 0120R4

BRIDGE NO. 34-0006 (TEMP)
KILOMETER POST 12.6

DISREGARD PRINTS BEARING EARLIER REVISION DATES →

REVISION DATES (PRELIMINARY STAGE ONLY): 11/03/07 01/07/09

SHEET 121 OF 214

DESIGN DETAIL SHEET (METRIC) (REV. 3/1/98)
●DATE● ●TIME● Pen Table File

ORIGINAL SCALE IN MILLIMETERS FOR REDUCED PLANS 0 10 20 30 40 50 60 70 80 90 100

FILE => p:\bb\04-012001\eti\jackpt_det_exist 01-07-09\aiet102.dgn

USERNAME => pzhao DATE PLOTTED => 1/20/2009 TIME PLOTTED => 7:27:49 PM FILE => p:\bb\04-012001\eti\jackpt_det_exist 01-07-09\aiet102.dgn

100% PS&E

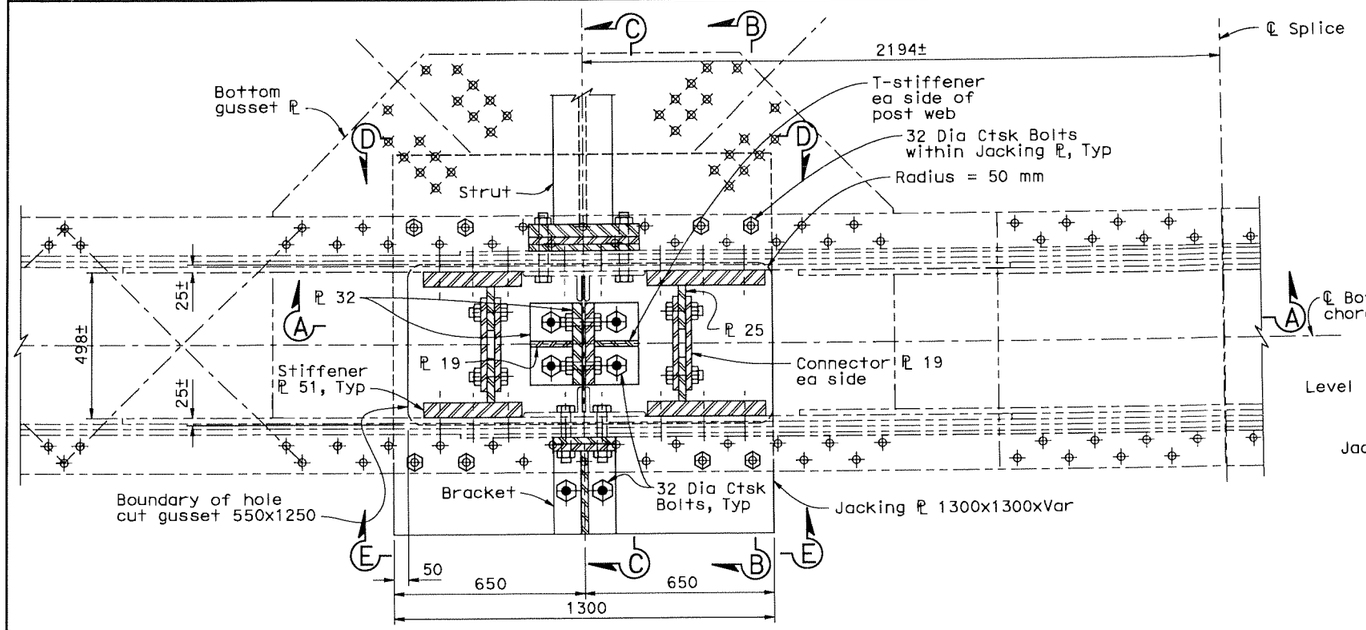

DETAIL 1 - L29 SOUTH TRUSS PLAN

1:10

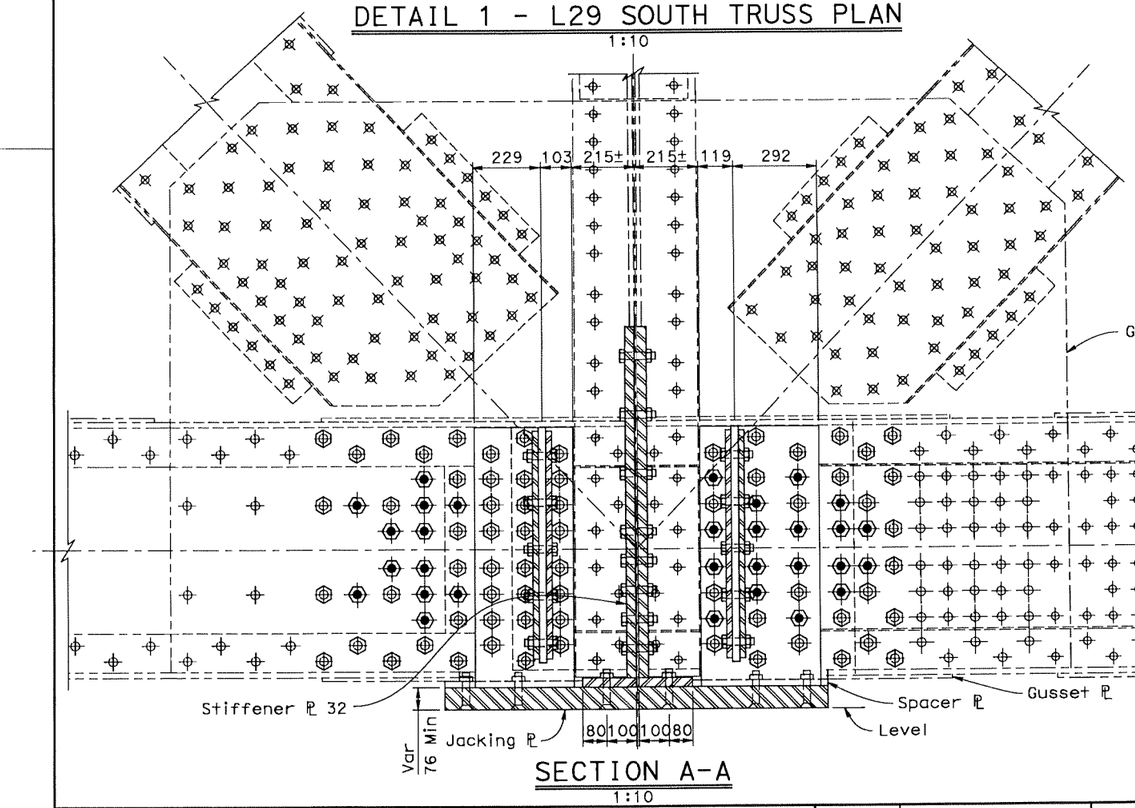

SECTION A-A

1:10

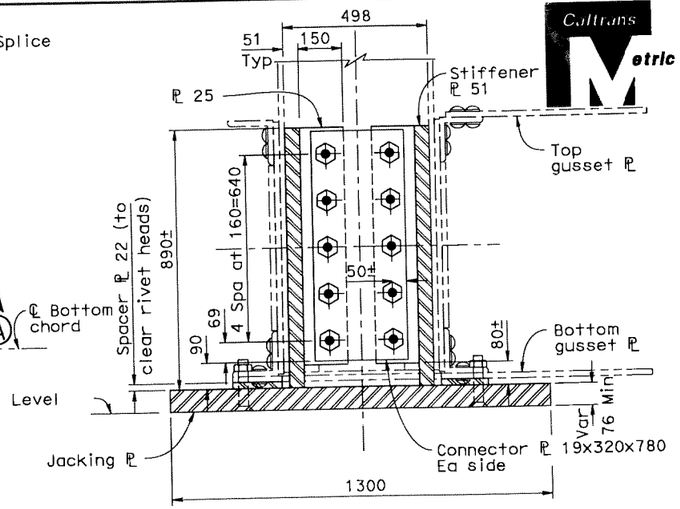

SECTION B-B

1:10

Note: Floor Beam and T-stiffener at post not shown for clarity.

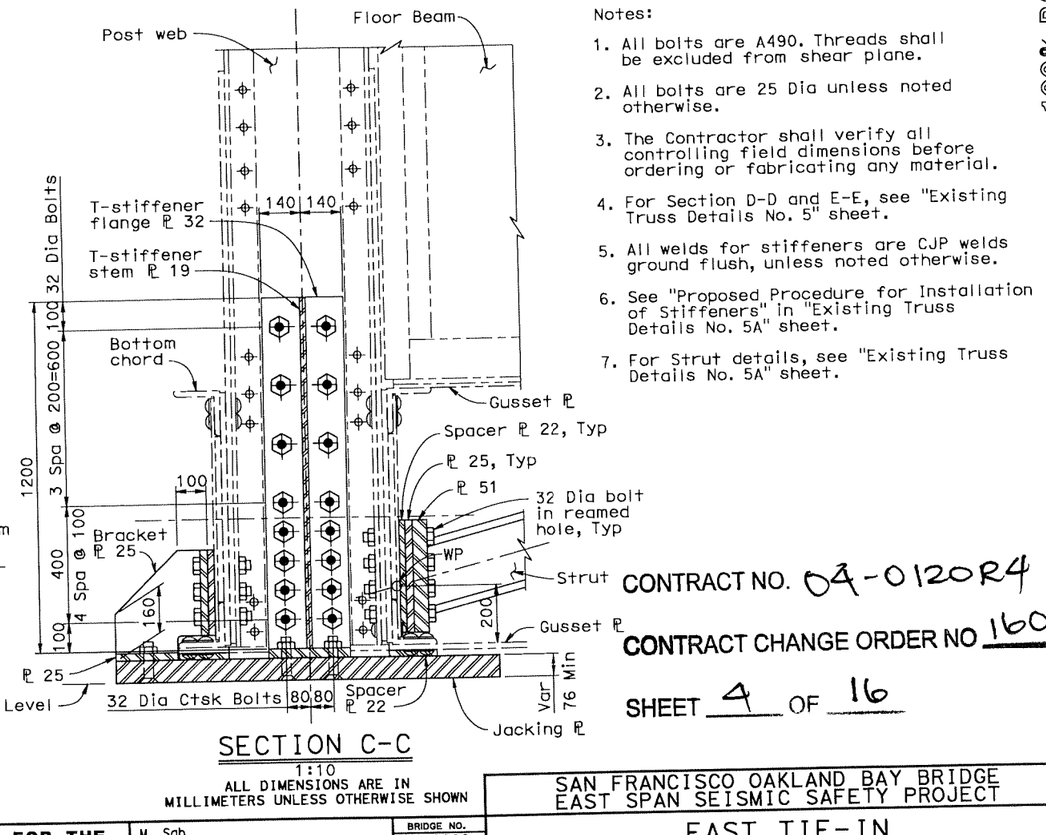

SECTION C-C

1:10

ALL DIMENSIONS ARE IN MILLIMETERS UNLESS OTHERWISE SHOWN

Notes:

1. All bolts are A490. Threads shall be excluded from shear plane.
2. All bolts are 25 Dia unless noted otherwise.
3. The Contractor shall verify all controlling field dimensions before ordering or fabricating any material.
4. For Section D-D and E-E, see "Existing Truss Details No. 5" sheet.
5. All welds for stiffeners are CJP welds ground flush, unless noted otherwise.
6. See "Proposed Procedure for Installation of Stiffeners" in "Existing Truss Details No. 5A" sheet.
7. For Strut details, see "Existing Truss Details No. 5A" sheet.

LEGEND

- o Existing rivet to remain
- Remove rivet, replace with bolt
- Add new bolt
- ——— Indicates Existing Structure
- Indicates New Steel

DIST	COUNTY	ROUTE	KILOMETER POST TOTAL PROJECT	SHEET No	TOTAL
04	SF	80	12.6/13.2		

REGISTERED CIVIL ENGINEER

01-07-09
PLANS APPROVAL DATE

Richard V. Nutt, No. C 20665, Exp. 9/30/09, CIVIL, STATE OF CALIFORNIA

The State of California or its officers or agents shall not be responsible for the accuracy or completeness of electronic copies of this plan sheet.

T.Y. LIN / MOFFATT & NICHOL
Two Harrison Street, Suite 500
San Francisco, CA 94105

100% PS&E

FILE => p:\bb\04-012001\eti\jackpt_det_exist 01-07-09\aetd01.dgn
TIME PLOTTED => 7:27:53 PM
DATE PLOTTED => 20/2009
USERNAME => DZHOO

CONTRACT NO. 04-0120R4

CONTRACT CHANGE ORDER NO 160

SHEET 4 OF 16

DESIGN	BY R. Nutt, S. Singh	CHECKED C. Redfield	PREPARED FOR THE STATE OF CALIFORNIA DEPARTMENT OF TRANSPORTATION
DETAILS	BY A. Sudhausen	CHECKED P. Zhao	
QUANTITIES	BY A. Lee	CHECKED H. Nelson	

M. Sah, PROJECT ENGINEER
S. Abbas, PROJECT MANAGER
CU
EA 0120R4

BRIDGE NO. 34-0006 (TEMP)
KILOMETER POST 12.6

DESIGN OVERSIGHT
SIGN OFF DATE

DESIGN DETAIL SHEET (METRIC) (REV. 3/1/98)
●DATE● ●TIME● Pen Table File

ORIGINAL SCALE IN MILLIMETERS FOR REDUCED PLANS 0 10 20 30 40 50 60 70 80 90 100

DISREGARD PRINTS BEARING EARLIER REVISION DATES →

REVISION DATES (PRELIMINARY STAGE ONLY): 11/20/07, 8/20/08, 01/07/09

SAN FRANCISCO OAKLAND BAY BRIDGE EAST SPAN SEISMIC SAFETY PROJECT

EAST TIE-IN

EXISTING TRUSS DETAILS NO. 1

SHEET 122 OF 214

FILE => p:\bb\04-012001\eti\jackpt_det_exist 01-07-09\aetd01.dgn

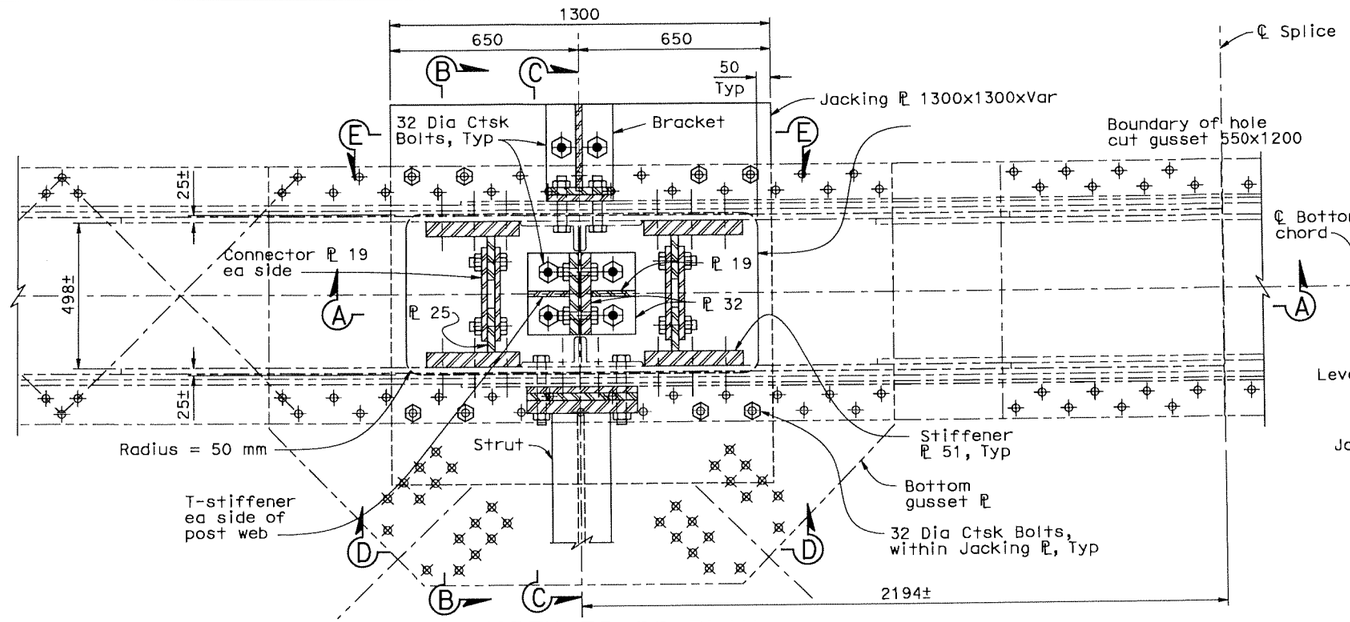

L29 NORTH TRUSS PLAN

Detail 1 Similar

1:10

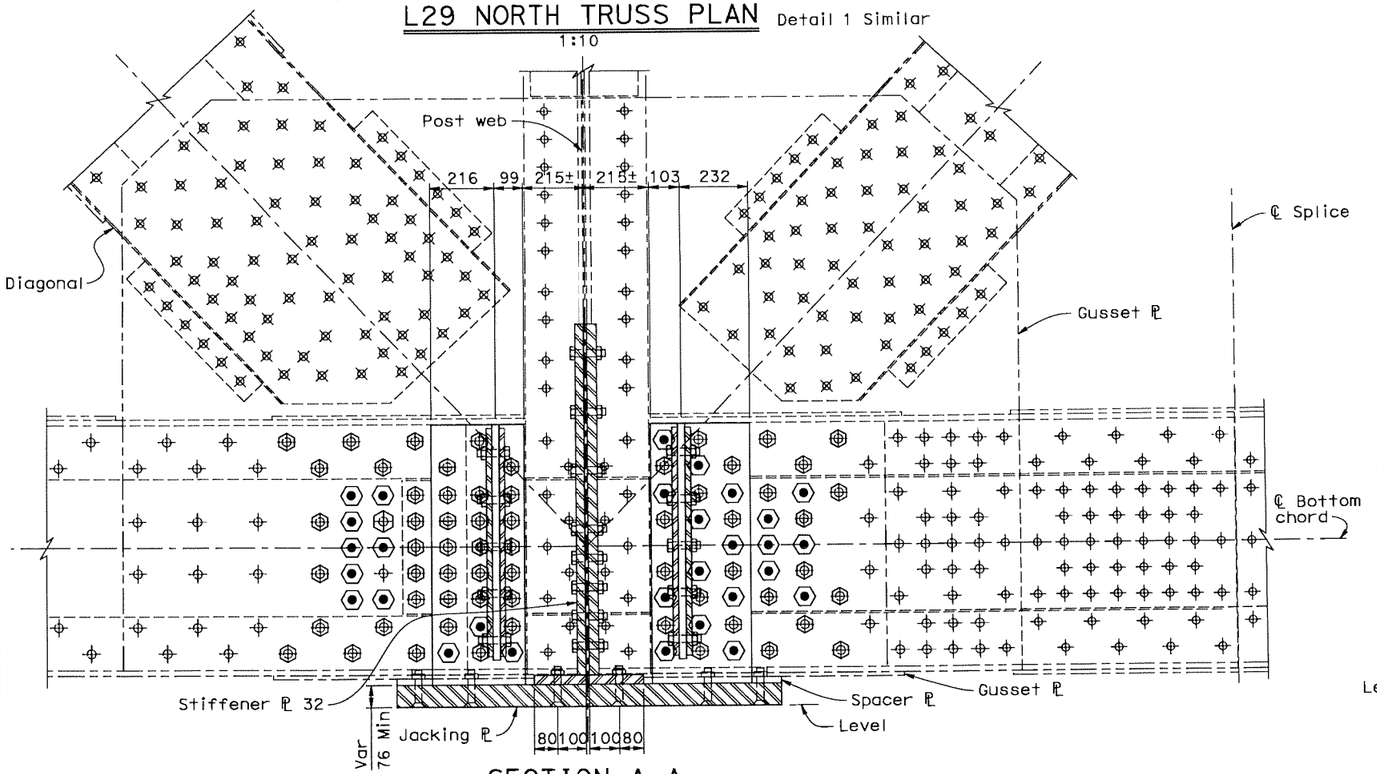

SECTION A-A

1:10

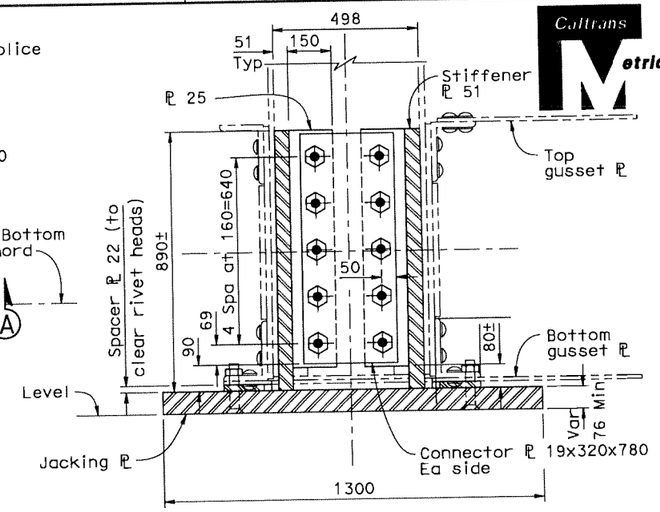

SECTION B-B

1:10

Note: Floor Beam and T-stiffener at post not shown for clarity.

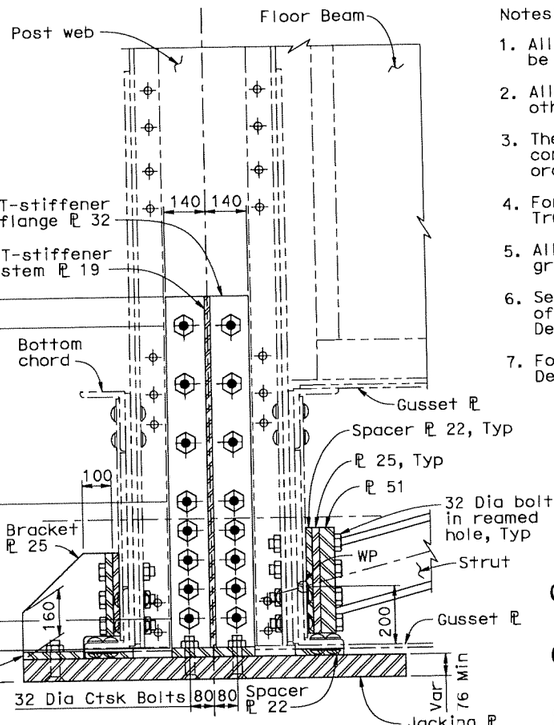

SECTION C-C

1:10

ALL DIMENSIONS ARE IN MILLIMETERS UNLESS OTHERWISE SHOWN

LEGEND

- o Existing rivet to remain
- Remove rivet, replace with bolt
- Add new bolt
- ——— Indicates Existing Structure
- Indicates New Steel

Notes:

1. All bolts are A490. Threads shall be excluded from shear plane.
2. All bolts are 25 Dia unless noted otherwise.
3. The Contractor shall verify all controlling field dimensions before ordering or fabricating any material.
4. For Section D-D and E-E, see "Existing Truss Details No. 5" sheet.
5. All welds for stiffeners are CJP welds ground flush, unless noted otherwise.
6. See "Proposed Procedure for Installation of Stiffeners" in "Existing Truss Details No. 5A" sheet.
7. For Strut details, see "Existing Truss Details No. 5A" sheet.

DIST	COUNTY	ROUTE	KILOMETER POST TOTAL PROJECT	SHEET No	TOTAL
04	SF	80	12.6/13.2		

REGISTERED CIVIL ENGINEER

01-07-09
PLANS APPROVAL DATE

Registered Professional Engineer — Richard V. Nutt — No. C 20665 — Exp. 9/30/09 — CIVIL — State of California

The State of California or its officers or agents shall not be responsible for the accuracy or completeness of electronic copies of this plan sheet.

T.Y. LIN / MOFFATT & NICHOL
Two Harrison Street, Suite 500
San Francisco, CA 94105

CONTRACT NO. 04-0120R4

CONTRACT CHANGE ORDER NO 160

SHEET 5 OF 16

DESIGN	BY R. Nutt, S. Singh	CHECKED C. Redfield	PREPARED FOR THE STATE OF CALIFORNIA DEPARTMENT OF TRANSPORTATION	W. Sah, PROJECT ENGINEER; S. Abbas, PROJECT MANAGER	BRIDGE NO. 34-0006 (TEMP); KILOMETER POST 12.6
DETAILS	BY A. Sudhausen	CHECKED P. Zhao			
QUANTITIES	BY A. Lee	CHECKED H. Nelson		CU EA 0120R4	

SAN FRANCISCO OAKLAND BAY BRIDGE EAST SPAN SEISMIC SAFETY PROJECT

EAST TIE-IN

EXISTING TRUSS DETAILS NO. 2

DESIGN OVERSIGHT

SIGN OFF DATE

DESIGN DETAIL SHEET (METRIC) (REV. 3/1/98)
●DATE● ●TIME● Pen Table File

ORIGINAL SCALE IN MILLIMETERS FOR REDUCED PLANS 0 10 20 30 40 50 60 70 80 90 100

DISREGARD PRINTS BEARING EARLIER REVISION DATES →

REVISION DATES (PRELIMINARY STAGE ONLY): 11/05/01 8/30/06 01/07/09

SHEET 123 OF 214

FILE => p:\bb\04-012001\eti\jackpt_det_exist 01-07-09\aetd02.dgn

100% PS&E

TIME PLOTTED => 7:27:57 PM

DATE PLOTTED => 7/20/2009

USERNAME => pzhao

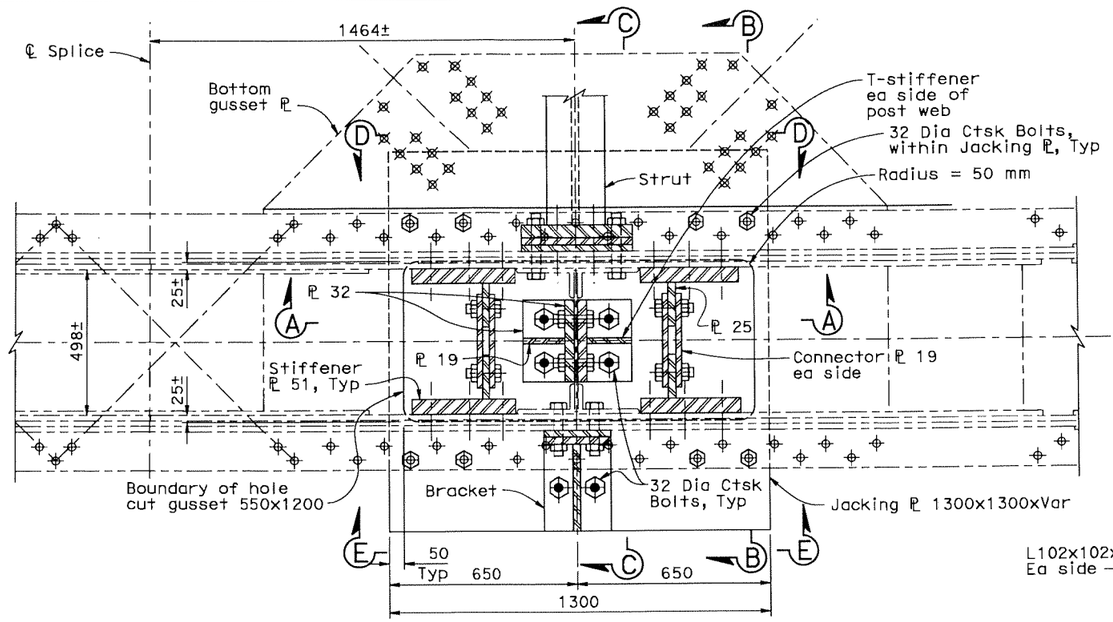

L33 SOUTH TRUSS PLAN
Detail 1 Similar
1:10

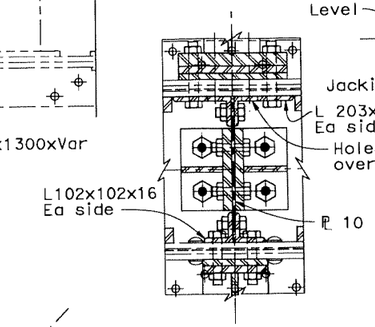

PLAN 150mm ABOVE JACKING PLATE
1:10
For balance of detailing see L33S plan

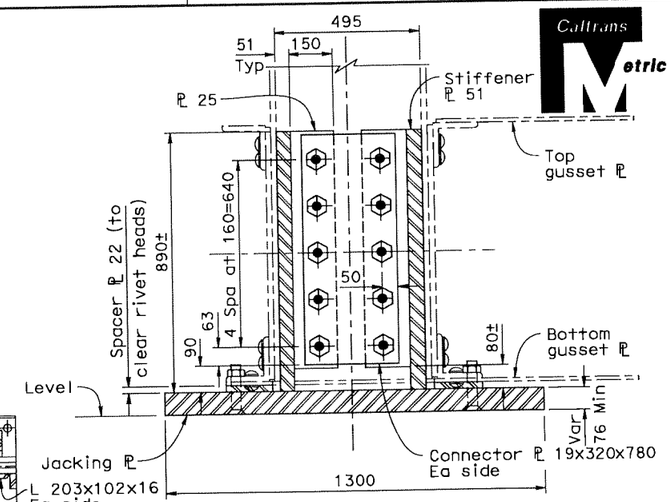

SECTION B-B
1:10

Note: Floor Beam and T-stiffener at post not shown for clarity.

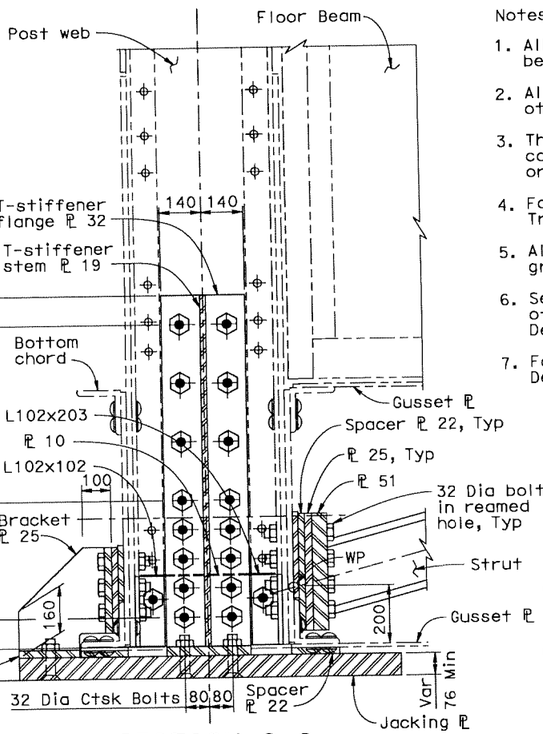

SECTION C-C
1:10

ALL DIMENSIONS ARE IN MILLIMETERS UNLESS OTHERWISE SHOWN

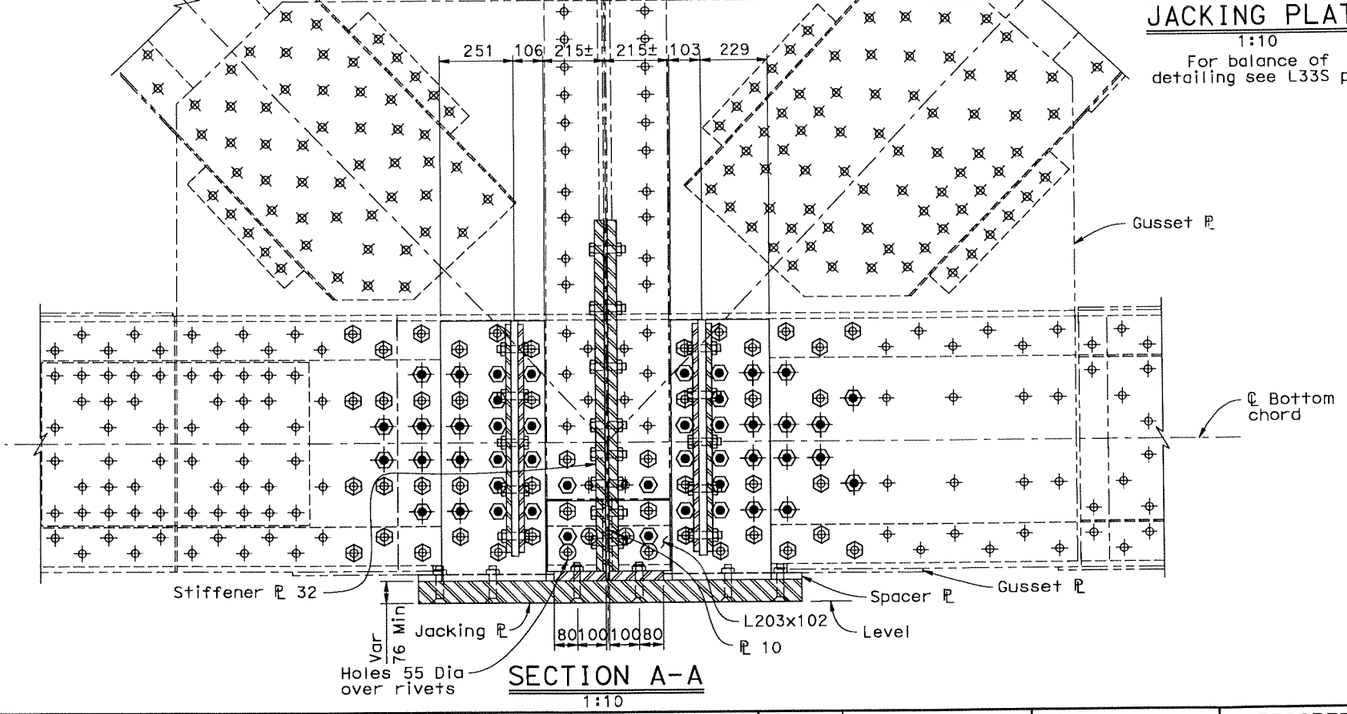

SECTION A-A
1:10

Notes:

1. All bolts are A490. Threads shall be excluded from shear plane.
2. All bolts are 25 Dia unless noted otherwise.
3. The Contractor shall verify all controlling field dimensions before ordering or fabricating any material.
4. For Section D-D and E-E, see "Existing Truss Details No. 5" sheet.
5. All welds for stiffeners are CJP welds ground flush, unless noted otherwise.
6. See "Proposed Procedure for Installation of Stiffeners" in "Existing Truss Details No. 5A" sheet.
7. For Strut details, see "Existing Truss Details No. 5A" sheet.

LEGEND

- o Existing rivet to remain
- ⬡ Remove rivet, replace with bolt
- ◉ Add new bolt
- ———— Indicates Existing Structure
- ▨ Indicates New Steel

DIST	COUNTY	ROUTE	KILOMETER POST TOTAL PROJECT	SHEET No	TOTAL
04	SF	80	12.6/13.2		

REGISTERED CIVIL ENGINEER

01-07-09
PLANS APPROVAL DATE

REGISTERED PROFESSIONAL ENGINEER — Richard V. Nutt — No. C 20665 — Exp. 9/30/09 — CIVIL — STATE OF CALIFORNIA

The State of California or its officers or agents shall not be responsible for the accuracy or completeness of electronic copies of this plan sheet.

T.Y. LIN / MOFFATT & NICHOL
Two Harrison Street, Suite 500
San Francisco, CA 94105

CONTRACT NO. 04-0120R4

CONTRACT CHANGE ORDER NO 166

SHEET 6 OF 16

SAN FRANCISCO OAKLAND BAY BRIDGE
EAST SPAN SEISMIC SAFETY PROJECT

EAST TIE-IN

EXISTING TRUSS DETAILS NO. 3

DESIGN	BY	CHECKED
DESIGN	R. Nutt, S. Singh	C. Redfield
DETAILS	A. Sudhausen	P. Zhao
QUANTITIES	A. Lee	H. Nelson

PREPARED FOR THE STATE OF CALIFORNIA
DEPARTMENT OF TRANSPORTATION

M. Sah — PROJECT ENGINEER
S. Abbas — PROJECT MANAGER

BRIDGE NO. 34-0006 (TEMP)
KILOMETER POST 12.6

CU
EA 0120R4

DESIGN OVERSIGHT
SIGN OFF DATE

DESIGN DETAIL SHEET (METRIC) (REV. 3/1/98)
●DATE● ●TIME● Pen Table File

ORIGINAL SCALE IN MILLIMETERS FOR REDUCED PLANS 0 10 20 30 40 50 60 70 80 90 100

DISREGARD PRINTS BEARING EARLIER REVISION DATES →
REVISION DATES (PRELIMINARY STAGE ONLY): 11/08/07 | 8/20/08 | 01/07/09

SHEET 124 OF 214

FILE => p:\bb\04-012001\etl\jackpt_det_exist 01-07-09\aetd03.dgn

100% PS&E

DATE PLOTTED => 7/20/2009
TIME PLOTTED => 7:28:01 PM
USERNAME => pzhao

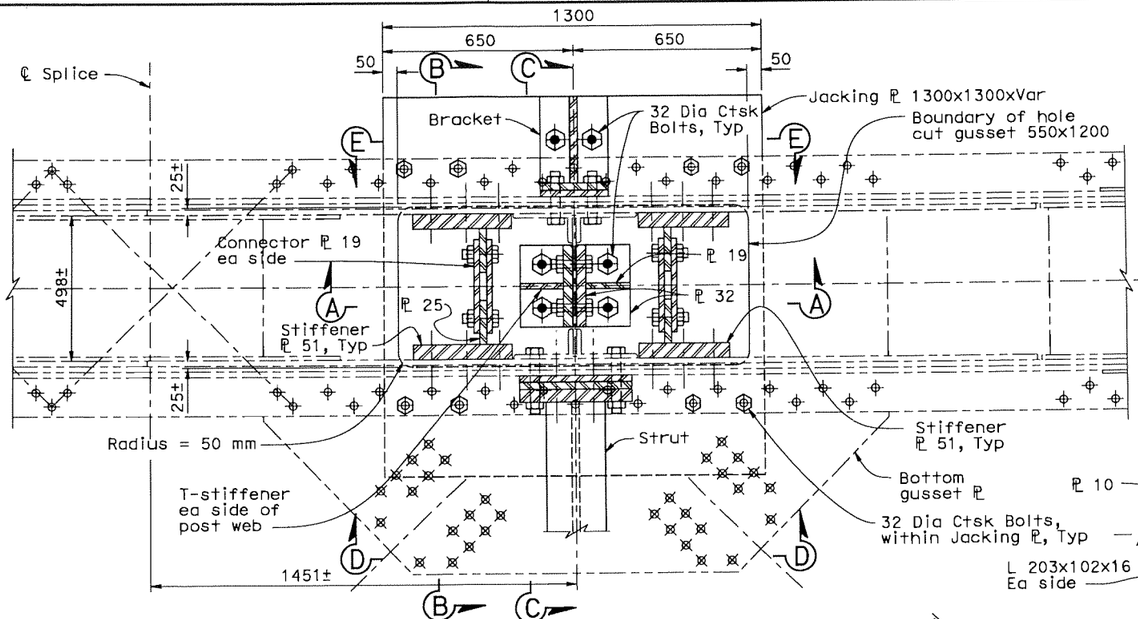

L33 NORTH TRUSS PLAN

Detail 1 Similar

1:10

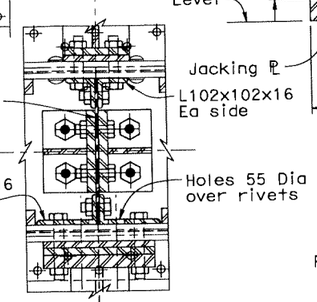

PLAN 150mm ABOVE JACKING PLATE

1:10

For balance of detailing see L33N plan

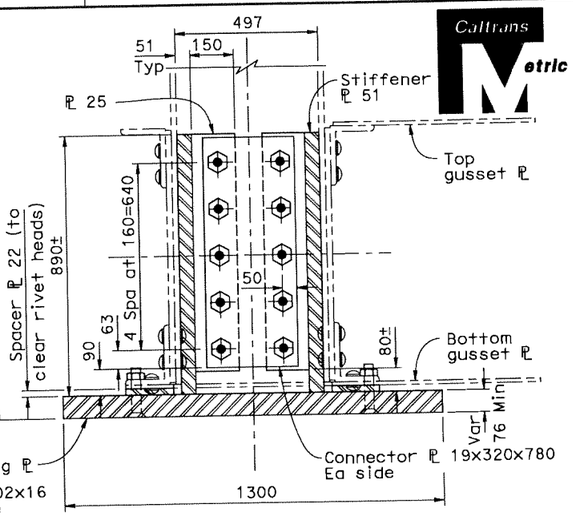

SECTION B-B

1:10

Note: Floor Beam and T-stiffener at post not shown for clarity.

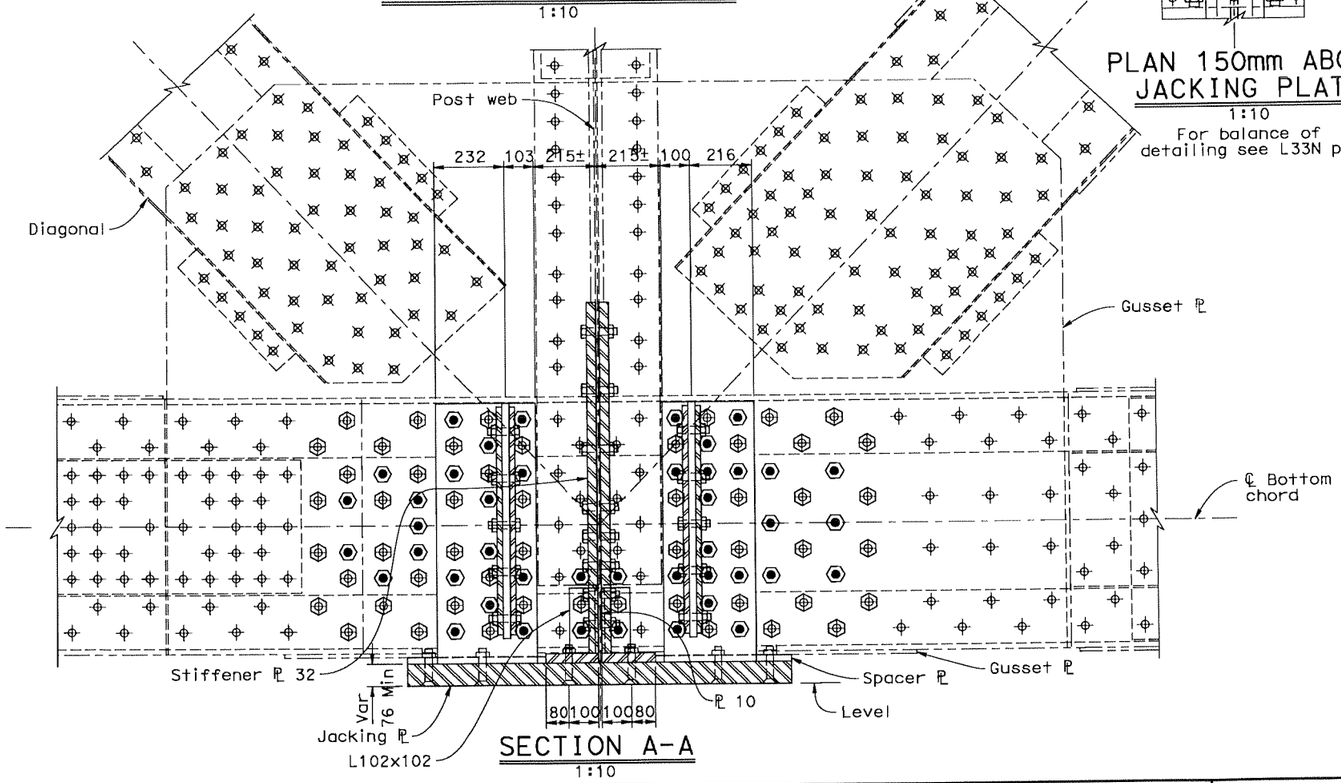

SECTION A-A

1:10

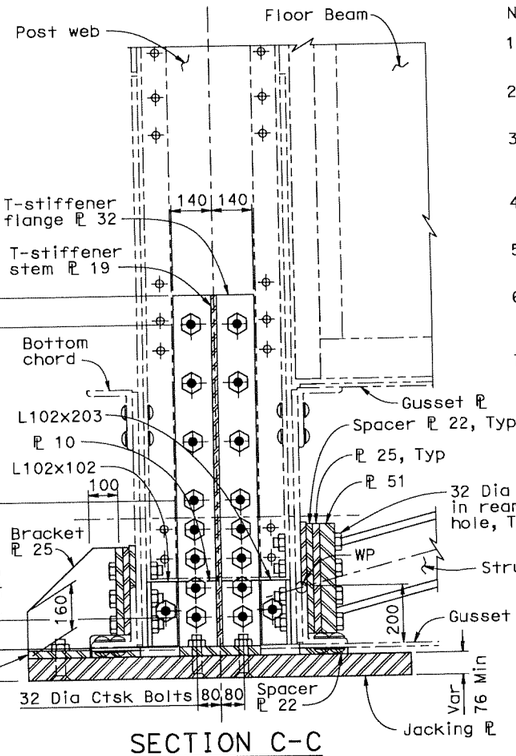

SECTION C-C

1:10

ALL DIMENSIONS ARE IN MILLIMETERS UNLESS OTHERWISE SHOWN

LEGEND

- o Existing rivet to remain
- ⬡ Remove rivet, replace with bolt
- ◉ Add new bolt
- ———— Indicates Existing Structure
- ▨ Indicates New Steel

Notes:

1. All bolts are A490. Threads shall be excluded from shear plane.
2. All bolts are 25 Dia unless noted otherwise.
3. The Contractor shall verify all controlling field dimensions before ordering or fabricating any material.
4. For Section D-D and E-E, see "Existing Truss Details No. 5" sheet.
5. All welds for stiffeners are CJP welds ground flush, unless noted otherwise.
6. See "Proposed Procedure for Installation of Stiffeners" in "Existing Truss Details No. 5A" sheet.
7. For Strut details, see "Existing Truss Details No. 5A" sheet.

DIST	COUNTY	ROUTE	KILOMETER POST TOTAL PROJECT	SHEET No	TOTAL
04	SF	80	12.6/13.2		

Caltrans Metric

REGISTERED CIVIL ENGINEER

01-07-09
PLANS APPROVAL DATE

REGISTERED PROFESSIONAL ENGINEER — Richard V. Nutt — No. C 20665 — Exp. 9/30/09 — CIVIL — STATE OF CALIFORNIA

The State of California or its officers or agents shall not be responsible for the accuracy or completeness of electronic copies of this plan sheet.

T.Y. LIN / MOFFATT & NICHOL
Two Harrison Street, Suite 500
San Francisco, CA 94105

100% PS&E

CONTRACT NO. 04-0120R4

CONTRACT CHANGE ORDER NO 160

SHEET 7 OF 16

DESIGN OVERSIGHT

SIGN OFF DATE

	BY	CHECKED
DESIGN	R. Nutt, S. Singh	C. Redfield
DETAILS	A. Sudhausen	P. Zhao
QUANTITIES	A. Lee	H. Nelson

PREPARED FOR THE STATE OF CALIFORNIA DEPARTMENT OF TRANSPORTATION

M. Sah — PROJECT ENGINEER
S. Abbas — PROJECT MANAGER

CU
EA 0120R4

BRIDGE NO. 34-0006 (TEMP)
KILOMETER POST 12.6

SAN FRANCISCO OAKLAND BAY BRIDGE EAST SPAN SEISMIC SAFETY PROJECT

EAST TIE-IN

EXISTING TRUSS DETAILS NO. 4

DISREGARD PRINTS BEARING EARLIER REVISION DATES →

REVISION DATES (PRELIMINARY STAGE ONLY): 11/09/07 | 8/20/08 | 01/07/09

SHEET 125 OF 214

DESIGN DETAIL SHEET (METRIC) (REV. 3/1/98)
◆DATE◆ ◆TIME◆ Pen Table File

ORIGINAL SCALE IN MILLIMETERS FOR REDUCED PLANS 0 10 20 30 40 50 60 70 80 90 100

FILE => p:\bb\04-012001\etl\jackpt_det_exist 01-07-09\aetd04.dgn

DATE PLOTTED => 7/20/2009 TIME PLOTTED => 7:28:05 PM USERNAME => pzhao

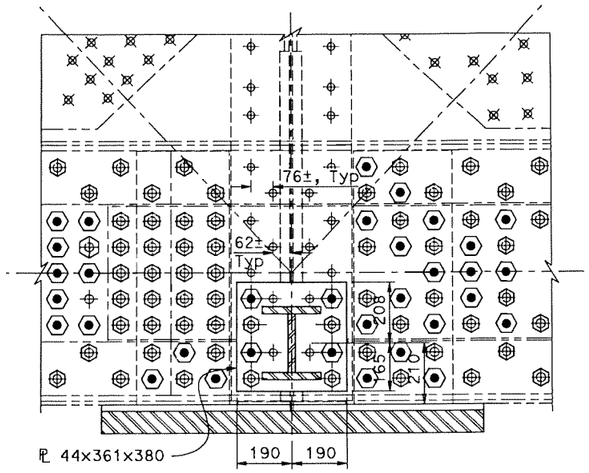

SECTION D-D
1:10

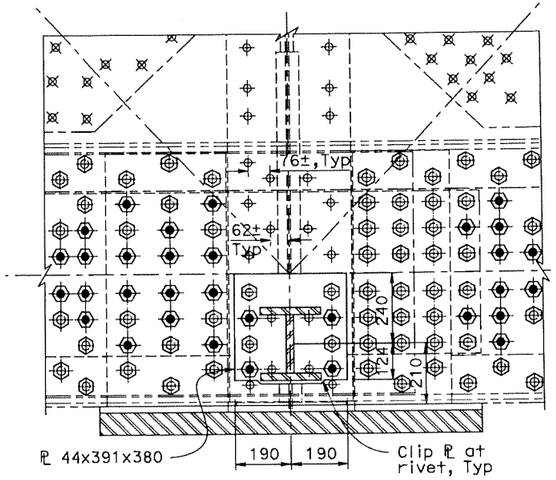

SECTION D-D
1:10

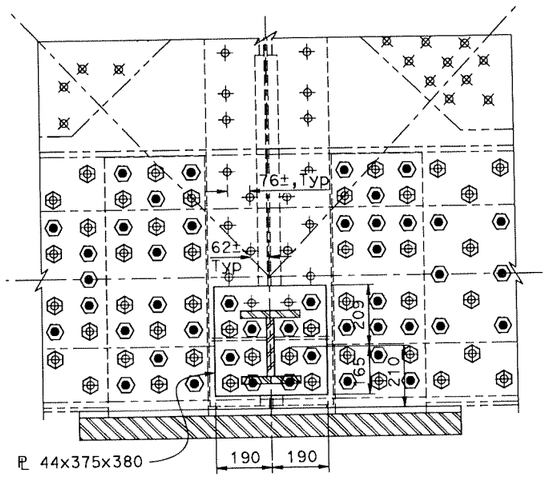

SECTION D-D
1:10

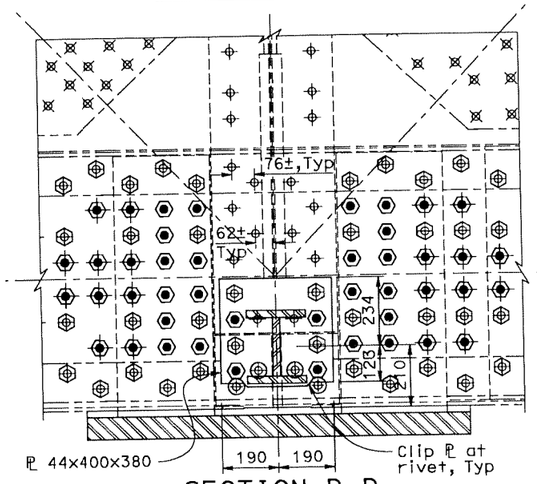

SECTION D-D
1:10

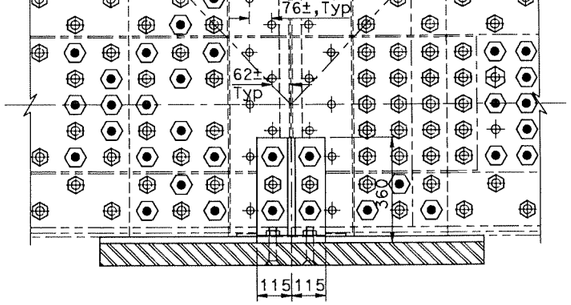

SECTION E-E
1:10

SECTION AT L29 NORTH TRUSS

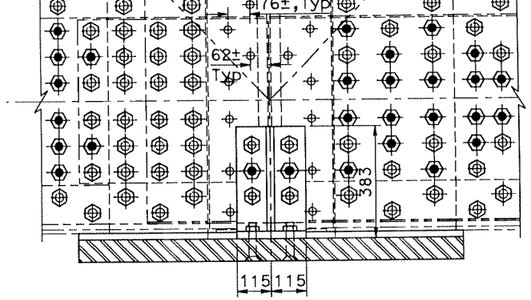

SECTION E-E
1:10

SECTION AT L29 SOUTH TRUSS

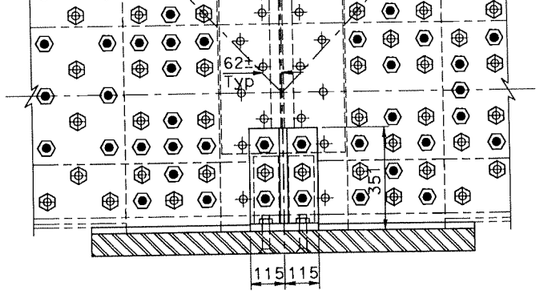

SECTION E-E
1:10

SECTION AT L33 NORTH TRUSS

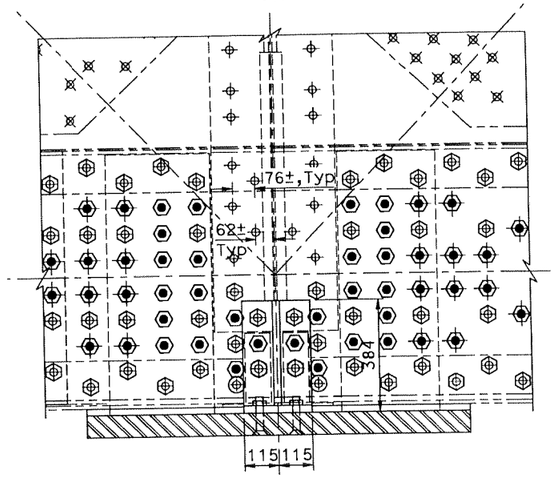

SECTION E-E
1:10

SECTION AT L33 SOUTH TRUSS

Notes:

1. All bolts are A490. Threads shall be excluded from shear plane.
2. All bolts are 25 Dia unless noted otherwise.
3. The Contractor shall verify all controlling field dimensions before ordering or fabricating any material.

LEGEND

- o Existing rivet to remain
- ⊚ Remove rivet, replace with bolt
- ◉ Add new bolt
- ------ Indicates Existing Structure
- ▨ Indicates New Steel

CONTRACT NO. 04-0120R4

CONTRACT CHANGE ORDER NO 168

SHEET 8 OF 16

ALL DIMENSIONS ARE IN MILLIMETERS UNLESS OTHERWISE SHOWN

Caltrans Metric

DIST	COUNTY	ROUTE	KILOMETER POST TOTAL PROJECT	SHEET No	TOTAL
04	SF	80	12.6/13.2		

REGISTERED CIVIL ENGINEER

01-07-09
PLANS APPROVAL DATE

REGISTERED PROFESSIONAL ENGINEER — Richard V. Nutt — No. C 20665 — Exp. 9/30/09 — CIVIL — STATE OF CALIFORNIA

The State of California or its officers or agents shall not be responsible for the accuracy or completeness of electronic copies of this plan sheet.

T.Y. LIN / MOFFATT & NICHOL
Two Harrison Street, Suite 500
San Francisco, CA 94105

100% PS&E

FILE => p:\bb\04-012001\et1\jackpt_det_exist 01-07-09\aetd05.dgn
TIME PLOTTED => 7:28:09 PM
DATE PLOTTED => 1/20/2009
USERNAME => pzhao

DESIGN	BY R. Nutt, S. Singh	CHECKED C. Redfield	
DETAILS	BY A. Sudhausen	CHECKED P. Zhao	
QUANTITIES	BY A. Lee	CHECKED H. Nelson	

PREPARED FOR THE STATE OF CALIFORNIA
DEPARTMENT OF TRANSPORTATION

M. Sah — PROJECT ENGINEER
S. Abbas — PROJECT MANAGER

CU
EA 0120R4

BRIDGE NO. 34-0006 (TEMP)
KILOMETER POST 12.6

SAN FRANCISCO OAKLAND BAY BRIDGE
EAST SPAN SEISMIC SAFETY PROJECT

EAST TIE-IN

EXISTING TRUSS DETAILS NO. 5

DESIGN OVERSIGHT

SIGN OFF DATE

DESIGN DETAIL SHEET (METRIC) (REV. 3/1/98)
●DATE● ●TIME● Pen Table File

ORIGINAL SCALE IN MILLIMETERS FOR REDUCED PLANS 0 10 20 30 40 50 60 70 80 90 100

DISREGARD PRINTS BEARING EARLIER REVISION DATES →

REVISION DATES (PRELIMINARY STAGE ONLY): 11/02/01 8/26/08 01/07/09

SHEET 126 OF 214

FILE => p:\bb\04-012001\et1\jackpt_det_exist 01-07-09\aetd05.dgn

Procedure for Installation of Stiffeners

1. Prior to installation of bolts or stiffeners at the jacking points at L29 and L33, sand blast clean all paint at the jacking locations and lower flange of the floor beams as shown in "Existing Truss Details" sheets.
2. All stiffener installation shall be completed prior to roll out roll in.
3. Install all bolts in chords that do not require removal of rivets. Use long erection bolts (A490) and nuts at stiffener locations with heads installed on the outside face of the chords.
4. Once Step 3 is complete, replace rivets in the chords (except those at the stiffeners) as follows: Remove a maximum of 2 rivets at any time, ream holes and install bolts. Repeat this process until all bolt replacements in the chords have been installed.
5. Repeat the process described in Step 4 to replace rivets at the stiffeners. At stiffener locations use long erection bolts and nuts with the heads installed on the outside face of the chords.
6. Cut an opening in the bottom gusset as shown. The Contractor shall ensure that no element of the truss is damaged.
7. Install two short L 102x102 and two short L 102x203 and connecting web plate directly above area for jacking plate at L33N, L33S
8. Cut out the eight rivets in the bottom flange angles for connecting the jacking plate.
9. Lift and install the jacking plate with spacer plates with 8 countersunk bolts to the flanges of the truss.
10. Install T-stiffeners at each side of the post web bearing directly onto the jacking plate below. Drill holes and install bolts to the jacking plate and the post web.
11. Install brackets on outside of bottom chord with spacer plates, bearing onto jacking plate. Remove rivets, ream rivet holes, drill new holes, and install bolts.
12. Install strut to floor beam on inside of bottom chord with spacer plates using the following procedure:
    a. Remove rivets, ream rivet holes and drill new holes at the bottom chord connection.
    b. Replace rivets with bolts, one at a time, at each end of the bracket area along the lower flange of the floor beam (Stage 1 and 2).
    c. Extract 6 rivets at front end of the bracket area (Stage 3). Replace with spacer plate and half of the bracket assembly. Tighten bolts to the floor beam above.
    d. Extract 6 rivets at back end of the bracket area (Stage 4). Replace with spacer plate and half of the bracket assembly. Tighten bolts to the floor beam above.
    e. Install splice plates on each side of the bracket web.
    f. Install strut with shims and bolt to lower chord end.
    g. Complete strut connection to floor beam bracket with shims and bolts.
13. Install the 51 mm vertical stiffener plates on each side of the post. Install only one stiffener at a time as follows:
    a. Install stiffener bearing directly onto the jacking plate below.
    b. Provide a positive means to retain the heads of the erection bolts.
    c. Remove nuts from all the long erection bolts at the stiffener being replaced. In the earlier operations, all the nuts were installed on the inside face of the chord.
    d. Once the stiffener is in place, tighten all nuts for the bolts at that stiffener.
    e. Remove erection bolts one by one and replace with new bolts with bolt head installed towards the inside of the chord.
    f. Completely install all four stiffener plates, one by one, at each jacking point.
14. Install connector plate between the stiffener plates.

Caltrans Metric

DIST	COUNTY	ROUTE	KILOMETER POST TOTAL PROJECT	SHEET No	TOTAL
04	SF	80	12.6/13.2		

REGISTERED CIVIL ENGINEER

01-07-09
PLANS APPROVAL DATE

REGISTERED PROFESSIONAL ENGINEER Richard V. Nutt No. C 20665 Exp. 9/30/09 CIVIL STATE OF CALIFORNIA

The State of California or its officers or agents shall not be responsible for the accuracy or completeness of electronic copies of this plan sheet.

T.Y. LIN / MOFFATT & NICHOL
Two Harrison Street, Suite 500
San Francisco, CA 94105

CONTRACT NO. 04-0120R4

CONTRACT CHANGE ORDER NO 160

SHEET 9 OF 16

LEGEND

- o Existing rivet to remain
- ⊚ Remove rivet, replace with bolt
- ◉ Add new bolt
- ———— Indicates Existing Structure
- ▨ Indicates New Steel

Notes:

1. All bolts are A490. Threads shall be excluded from shear plane.
2. The Contractor shall verify all controlling field dimensions before ordering or fabricating any material.

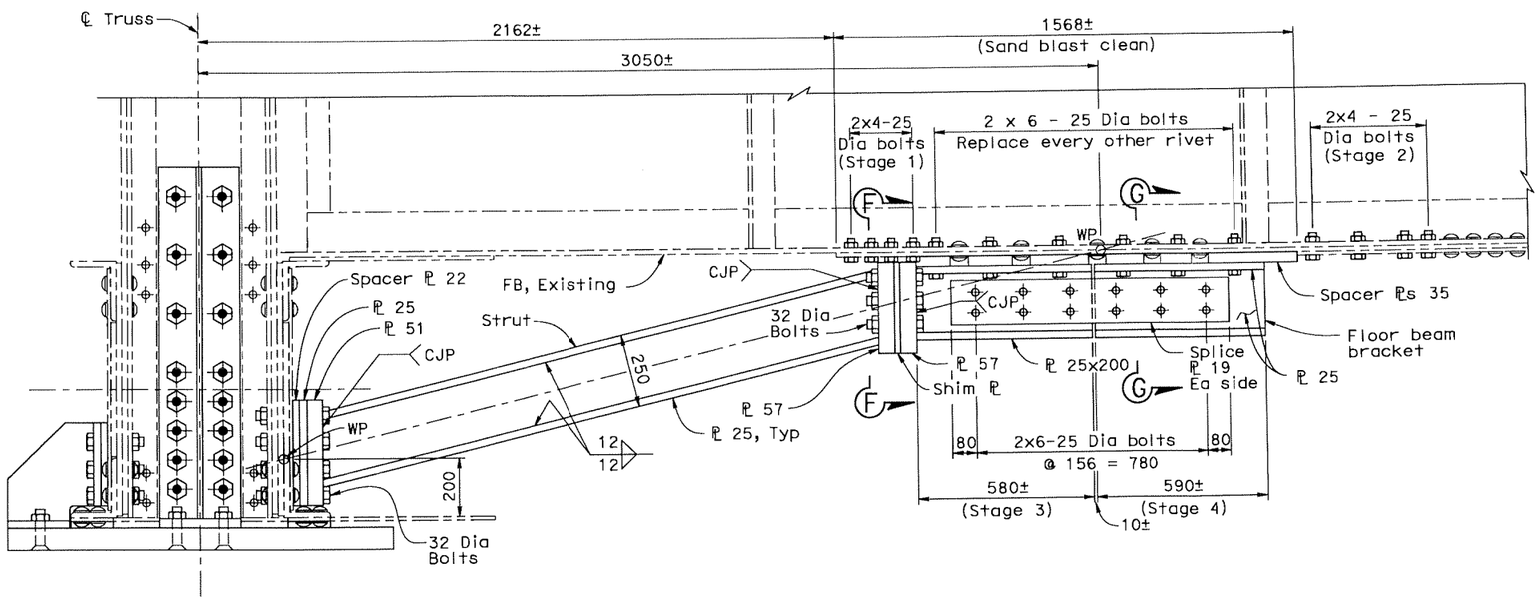

STRUT DETAIL
1:10

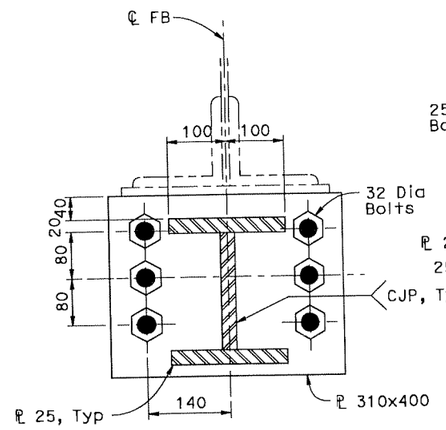

SECTION F-F
1:5

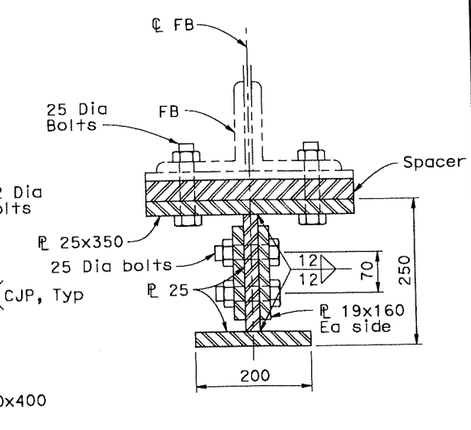

SECTION G-G
1:5

ALL DIMENSIONS ARE IN MILLIMETERS UNLESS OTHERWISE SHOWN

SAN FRANCISCO OAKLAND BAY BRIDGE
EAST SPAN SEISMIC SAFETY PROJECT

EAST TIE-IN

EXISTING TRUSS DETAILS NO. 5A

	BY	CHECKED
DESIGN	R. Nutt, S. Singh	C. Redfield
DETAILS	A. Sudhausen	P. Zhao
QUANTITIES	A. Lee	H. Nelson

PREPARED FOR THE STATE OF CALIFORNIA DEPARTMENT OF TRANSPORTATION

M. Sah, PROJECT ENGINEER
S. Abbas, PROJECT MANAGER

CU 34-0006 (TEMP)
EA 0120R4

KILOMETER POST 12.6

DESIGN OVERSIGHT

SIGN OFF DATE

DESIGN DETAIL SHEET (METRIC) (REV. 3/1/98)
●DATE● ●TIME● Pen Table File

ORIGINAL SCALE IN MILLIMETERS FOR REDUCED PLANS 0 10 20 30 40 50 60 70 80 90 100

DISREGARD PRINTS BEARING EARLIER REVISION DATES

REVISION DATES (PRELIMINARY STAGE ONLY): 11/09/07, 8/20/08, 01/07/09

SHEET 126A OF 214

FILE => p:\bb\04-012001\etl\jackpt_det_exist 01-07-09\aetd05a.dgn

100% PS&E

USERNAME => pzhao DATE PLOTTED => 1/20/2009 TIME PLOTTED => 7:28:13 PM FILE => p:\bb\04-012001\etl\jackpt_det_exist 01-07-09\aetd05a.dgn

DIST	COUNTY	ROUTE	KILOMETER POST TOTAL PROJECT	SHEET No	TOTAL
04	SF	80	12.6/13.2		

REGISTERED CIVIL ENGINEER

12-05-08
PLANS APPROVAL DATE

Charles Redfield No. C 27605 Exp. 12/31/09 CIVIL STATE OF CALIFORNIA

The State of California or its officers or agents shall not be responsible for the accuracy or completeness of electronic copies of this plan sheet.

T.Y. LIN / MOFFATT & NICHOL
Two Harrison Street, Suite 500
San Francisco, CA 94105

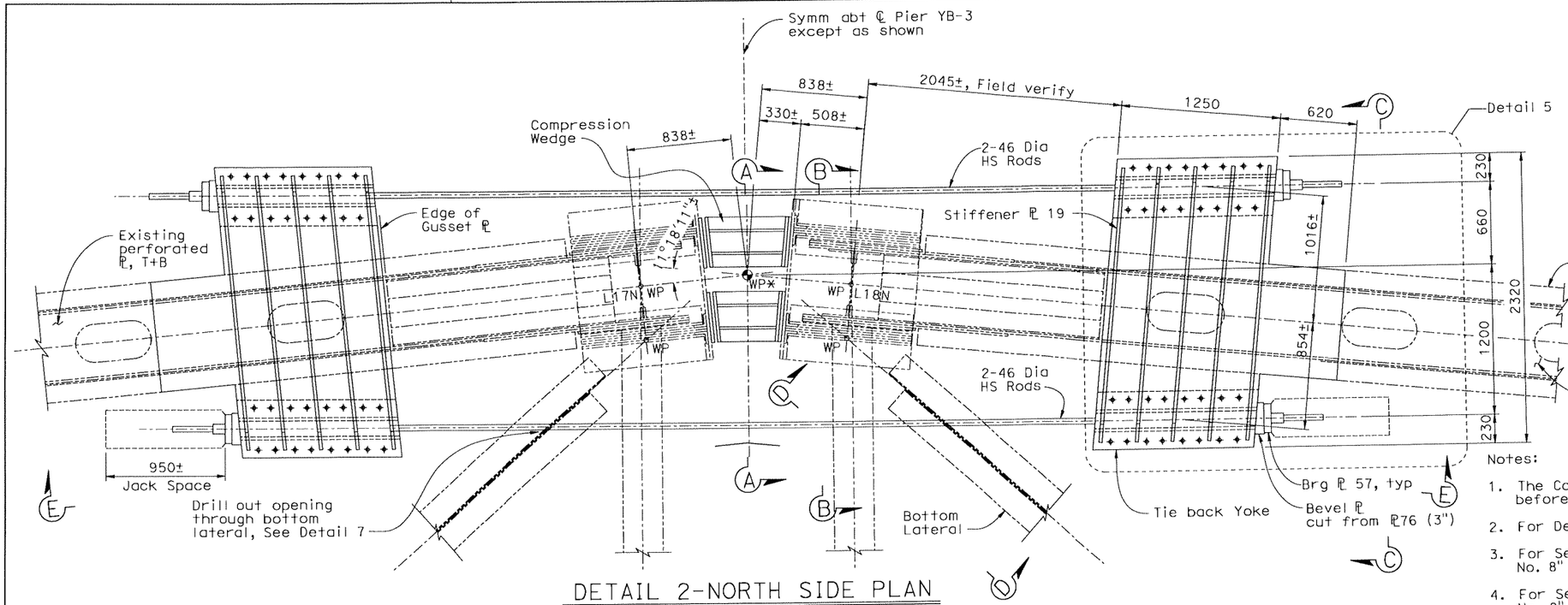

DETAIL 2-NORTH SIDE PLAN

1:20

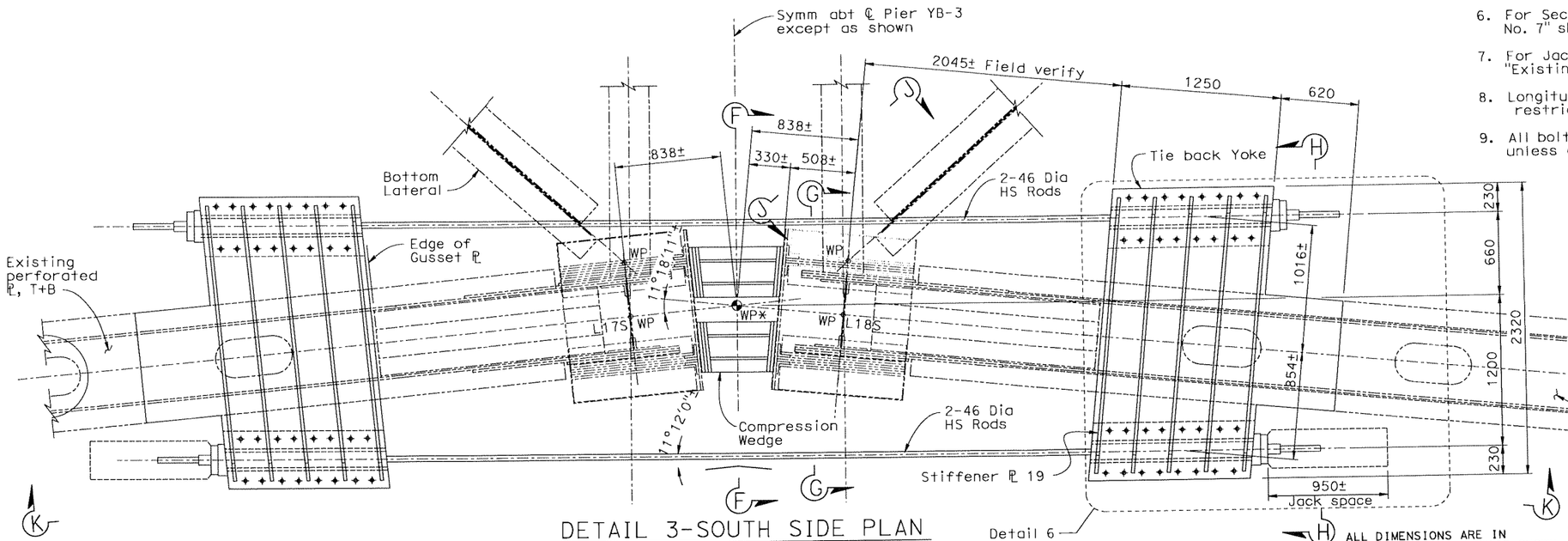

DETAIL 3-SOUTH SIDE PLAN

1:20

ALL DIMENSIONS ARE IN MILLIMETERS UNLESS OTHERWISE SHOWN

Legend:

------ Indicates existing structure

WP Indicates Working Point

WP* Indicates Work Point at intersection of lower chord ℄ and ℄ Pier YB-3

Notes:

1. The Contractor shall verify all controlling field dimensions before ordering or fabricating any material.
2. For Detail 5 and 6, see "Existing Truss Details No. 7" sheet.
3. For Sections A-A, B-B and C-C, see "Existing Truss Details No. 8" sheet.
4. For Sections F-F, G-G and H-H, see "Existing Truss Details No. 8" sheet.
5. For Sections D-D and J-J, see "Existing Truss Details No. 9" sheet.
6. For Sections E-E and K-K, see "Existing Truss Details No. 7" sheet.
7. For Jacking Force and Stressing Sequence of HS Rods, see "Existing Truss Details No. 7" sheet.
8. Longitudinal expansion movement at Pier YB-3 shall not be restrianed prior to bridge closure and RORI operation.
9. All bolts for connection at Pier YB-3 shall be 29 Dia, A 490. unless otherwise noted.

100% PS&E

CONTRACT NO. 04-0120R4

CONTRACT CHANGE ORDER NO 160

SHEET 10 OF 16

T. Ostrom/M. Whiteside/A. Akinsanya
DESIGN OVERSIGHT

SIGN OFF DATE

	BY	CHECKED
DESIGN	C. Redfield	S. Cheng
DETAILS	D. Singh	S. Lee
QUANTITIES	H. Nelson	A. Lee

PREPARED FOR THE STATE OF CALIFORNIA DEPARTMENT OF TRANSPORTATION

M. Sah
PROJECT ENGINEER
S. Abbas
PROJECT MANAGER
CU
EA 0120R4

BRIDGE NO.	KILOMETER POST
34-0006 (TEMP)	12.6

SAN FRANCISCO OAKLAND BAY BRIDGE EAST SPAN SEISMIC SAFETY PROJECT

EAST TIE-IN

EXISTING TRUSS DETAILS NO. 6

DISREGARD PRINTS BEARING EARLIER REVISION DATES

REVISION DATES (PRELIMINARY STAGE ONLY): 11/05/07 12/05/08

SHEET 127 OF 214

DESIGN DETAIL SHEET (METRIC) (REV. 3/1/98)
℗DATE℗ ℗TIME℗ Pen Table File

ORIGINAL SCALE IN MILLIMETERS FOR REDUCED PLANS 0 10 20 30 40 50 60 70 80 90 100

FILE => p:\bb\04-012001\eti\dgn\aletd06.dgn

USERNAME => ALee
DATE PLOTTED => 12/5/2008
TIME PLOTTED => 3:35:18 PM
FILE => p:\bb\04-012001\eti\dgn\aletd06.dgn

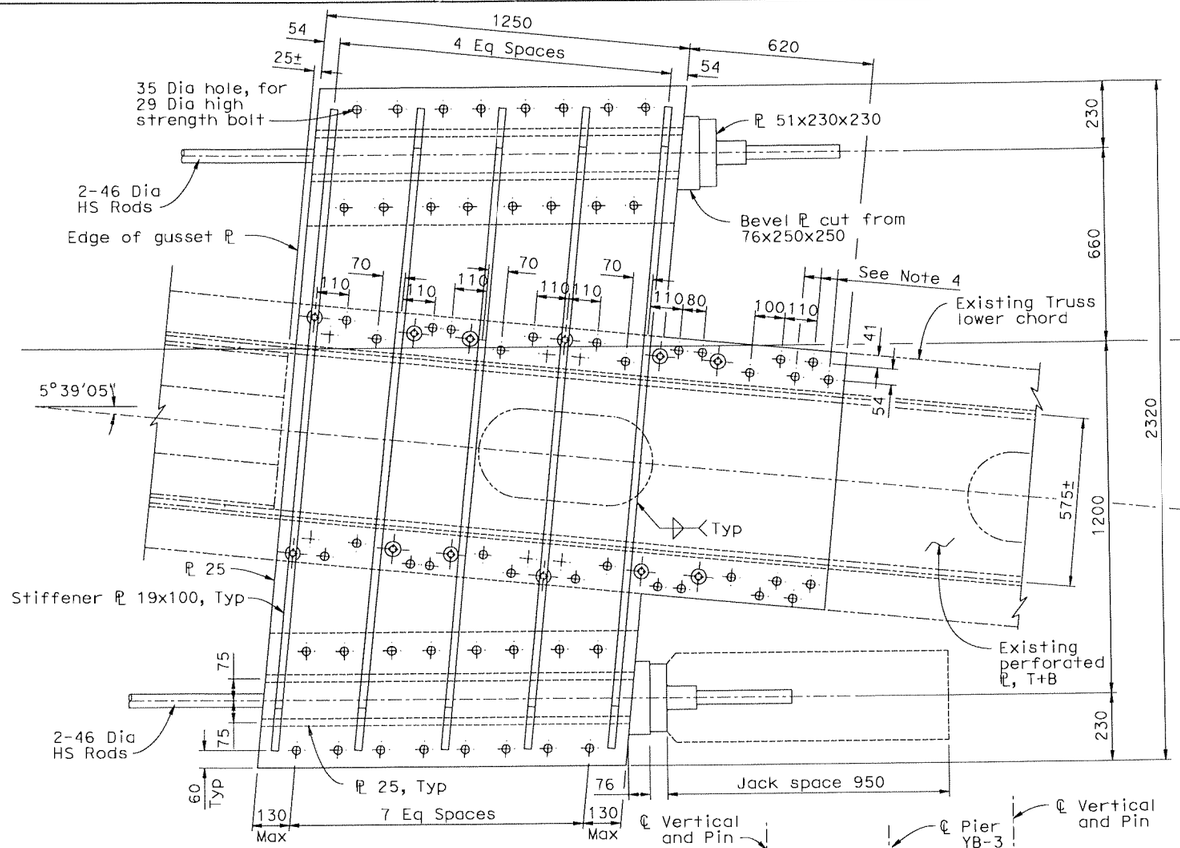

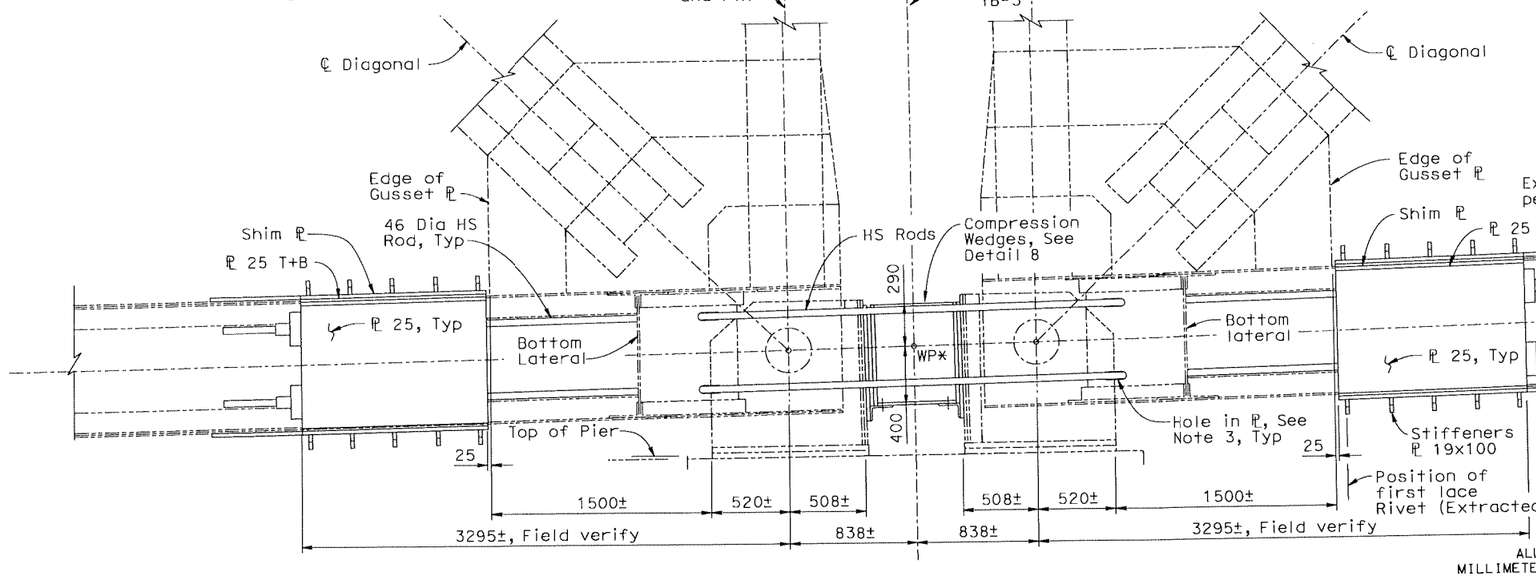

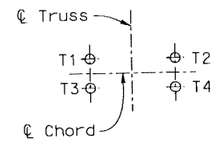

Projection of WP* at Pier YB-3

Stressing Notes:

Tendons = 46 Dia HS Rods. Insert all four Rods, leave a gap of 50mm open between nuts and bearing plate.

Immediately after roll out of RORI operation, insert shims and turn nuts snug up to the bearing plates. Then stress tendons in the following sequence.

Jacking Force Pj = 500 kN/Rod

Jacking Sequence
1. T1 = 100 kN
2. T2 = 200 kN
3. T3 = 500 kN
4. T4 = 500 kN
5. T1 = 500 kN
6. T2 = 500 kN

DETAIL 5 at N Truss shown

DETAIL 6 at S Truss similar

1:10

Caltrans Metric

DIST	COUNTY	ROUTE	KILOMETER POST TOTAL PROJECT	SHEET No	TOTAL
04	SF	80	12.6/13.2		

REGISTERED CIVIL ENGINEER

12-05-08
PLANS APPROVAL DATE

REGISTERED PROFESSIONAL ENGINEER — Charles Redfield — No. C 27605 — Exp. 12/31/09 — CIVIL — STATE OF CALIFORNIA

The State of California or its officers or agents shall not be responsible for the accuracy or completeness of electronic copies of this plan sheet.

T.Y. LIN / MOFFATT & NICHOL
Two Harrison Street, Suite 500
San Francisco, CA 94105

CONTRACT NO. 04-0120R4

CONTRACT CHANGE ORDER NO 166

SHEET 11 OF 16

LEGENDS:

- Indicates existing structure
- Oversize hole to center over existing bolt, See Detail below
- Indicates new hole and bolt
- Indicates removed rivet
- WP Indicates Working Point
- WP* Indicates Work Point at intersection of lower chord ℄ and ℄ Pier YB-3

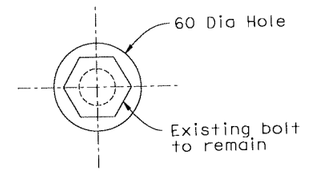

OVERSIZE HOLE DETAIL

1:2

Notes:

1. The Contractor shall verify all controlling field dimensions before ordering or fabricating any material.
2. All bolts shall be 29 Dia A490 unless noted otherwise.
3. For slotted hole detail in bottom lateral, see Detail 7 "Existing Truss Details No. 9" sheet.
4. Drill new holes and ream out existing holes in existing angles.
5. For compression wedge Detail 8, see "Existing Truss Details No. 9" sheet.

SECTION E-E Shown

SECTION K-K similar

1:20

Drawn for N. Truss, S. Truss similar
View taken along ℄ lower chord

ALL DIMENSIONS ARE IN MILLIMETERS UNLESS OTHERWISE SHOWN

SAN FRANCISCO OAKLAND BAY BRIDGE
EAST SPAN SEISMIC SAFETY PROJECT

EAST TIE-IN

EXISTING TRUSS DETAILS NO. 7

DESIGN	BY C. Redfield	CHECKED S. Cheng	PREPARED FOR THE STATE OF CALIFORNIA DEPARTMENT OF TRANSPORTATION
DETAILS	BY D. Singh	CHECKED S. Lee	
QUANTITIES	BY H. Nelson	CHECKED A. Lee	

T. Ostrom/M. Whiteside/A. Akinsanya
DESIGN OVERSIGHT

SIGN OFF DATE

M. Sah
PROJECT ENGINEER

S. Abbas
PROJECT MANAGER

CU
EA 0120R4

BRIDGE NO. 34-0006 (TEMP)
KILOMETER POST 12.6

DISREGARD PRINTS BEARING EARLIER REVISION DATES

REVISION DATES (PRELIMINARY STAGE ONLY): 11/05/07 12/05/08

SHEET 128 OF 214

DESIGN DETAIL SHEET (METRIC) (REV. 3/1/98)
℄DATE℄ ℄TIME℄ Pen Table File

ORIGINAL SCALE IN MILLIMETERS FOR REDUCED PLANS 0 10 20 30 40 50 60 70 80 90 100

FILE => p:\bb\04-012001\eti\dgn\aletd07.dgn

100% PS&E

USERNAME => ALee
DATE PLOTTED => 12/5/2008
TIME PLOTTED => 3:35:21 PM
FILE => p:\bb\04-012001\eti\dgn\aletd07.dgn

DIST	COUNTY	ROUTE	KILOMETER POST TOTAL PROJECT	SHEET No	TOTAL
04	SF	80	12.6/13.2		

REGISTERED CIVIL ENGINEER

12-05-08
PLANS APPROVAL DATE

Charles Redfield, No. C 27605, Exp. 12/31/09, CIVIL, REGISTERED PROFESSIONAL ENGINEER, STATE OF CALIFORNIA

The State of California or its officers or agents shall not be responsible for the accuracy or completeness of electronic copies of this plan sheet.

T.Y. LIN / MOFFATT & NICHOL
Two Harrison Street, Suite 500
San Francisco, CA 94105

Legend:

------ Indicates existing structure

WP Indicates Working Point

WP* Indicates Work Point at intersection of lower chord ℄ and ℄ Pier YB-3

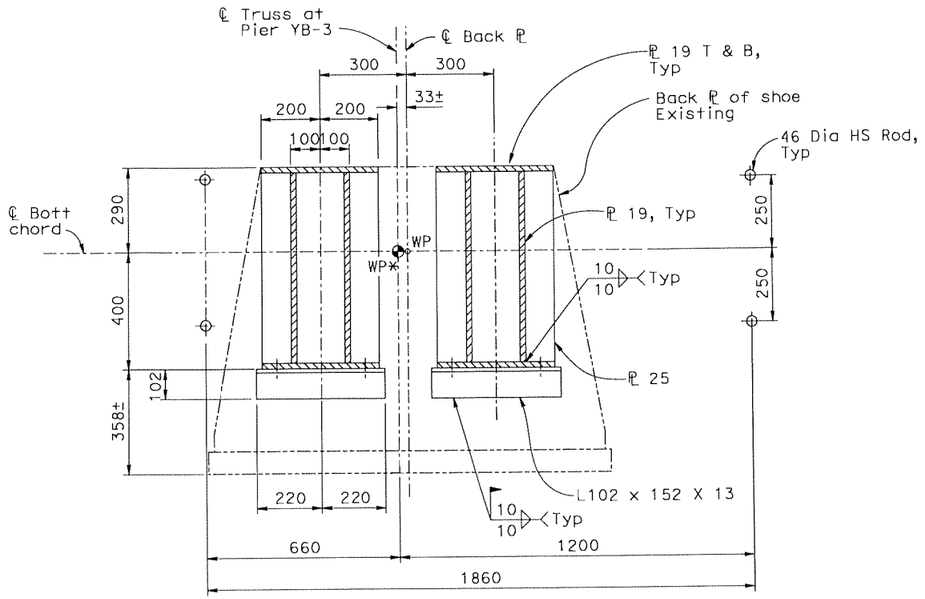

SECTION A-A Shown
SECTION F-F Similar
Compression Wedges
1:10

CONTRACT NO. 04-0120R4

CONTRACT CHANGE ORDER NO 160

SHEET 12 OF 16

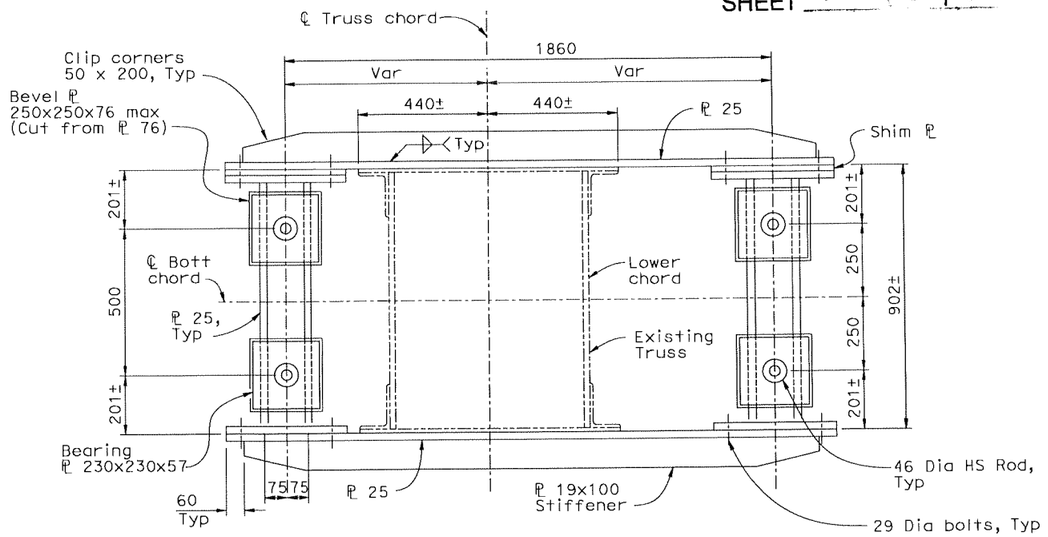

SECTION C-C Shown
SECTION H-H Similar
1:10

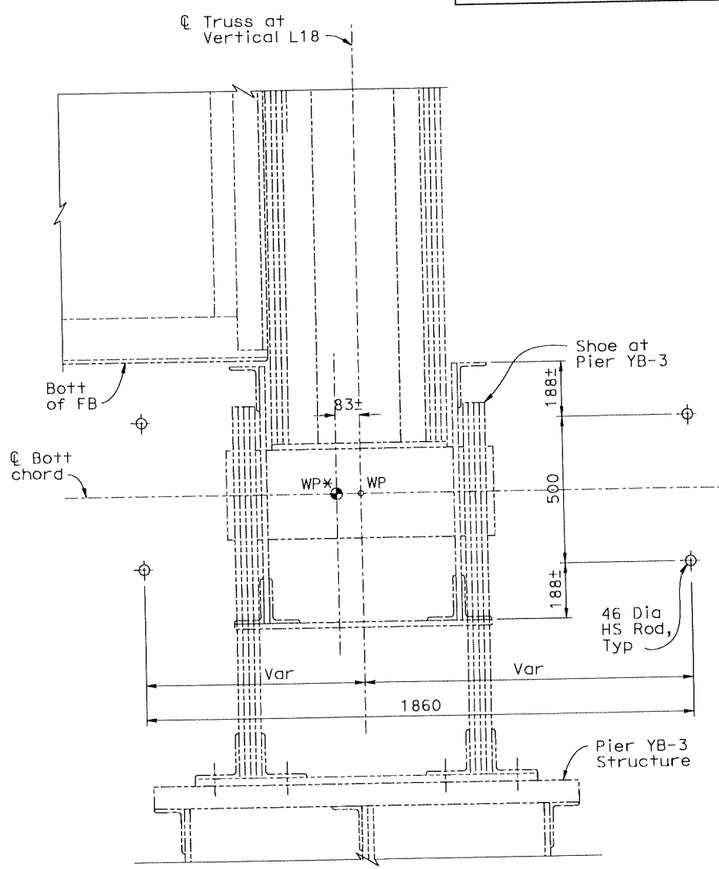

SECTION B-B Shown
SECTION G-G Similar
1:10

Notes:

1. The Contractor shall verify all controlling field dimensions before ordering or fabricating any material.

ALL DIMENSIONS ARE IN MILLIMETERS UNLESS OTHERWISE SHOWN

SAN FRANCISCO OAKLAND BAY BRIDGE
EAST SPAN SEISMIC SAFETY PROJECT

EAST TIE-IN

EXISTING TRUSS DETAILS NO. 8

DESIGN	BY C. Redfield	CHECKED S. Cheng	PREPARED FOR THE STATE OF CALIFORNIA DEPARTMENT OF TRANSPORTATION
DETAILS	BY D. Singh	CHECKED S. Lee	
QUANTITIES	BY H. Nelson	CHECKED A. Lee	

T. Ostrom/M. Whiteside/A. Akinsanya
DESIGN OVERSIGHT

SIGN OFF DATE

M. Sah
PROJECT ENGINEER
S. Abbas
PROJECT MANAGER

BRIDGE NO. 34-0006 (TEMP)
KILOMETER POST 12.6

CU EA 0120R4

DISREGARD PRINTS BEARING EARLIER REVISION DATES →

REVISION DATES (PRELIMINARY STAGE ONLY): 11/05/07, 12/05/08

SHEET 129 OF 214

DESIGN DETAIL SHEET (METRIC) (REV. 3/1/98)
@DATE@ @TIME@ Pen Table File

ORIGINAL SCALE IN MILLIMETERS FOR REDUCED PLANS 0 10 20 30 40 50 60 70 80 90 100

FILE => p:\bb\04-012001\eti\dgn\aletd08.dgn

100% PS&E

USERNAME => Alee
DATE PLOTTED => 12/5/2008
TIME PLOTTED => 3:35:23 PM
FILE => p:\bb\04-012001\eti\dgn\aletd08.dgn

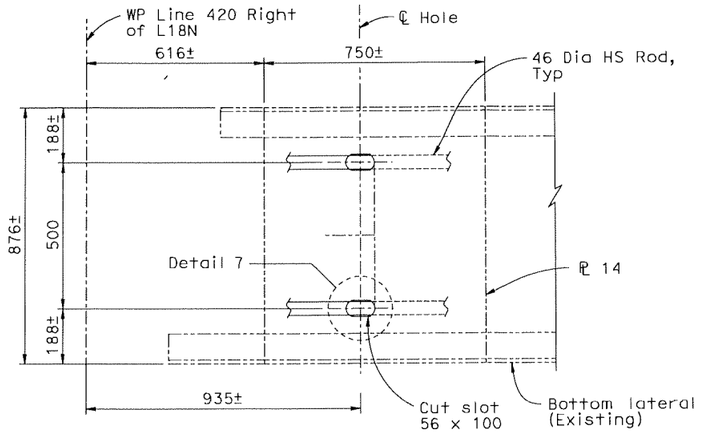

SECTION D-D
1:10

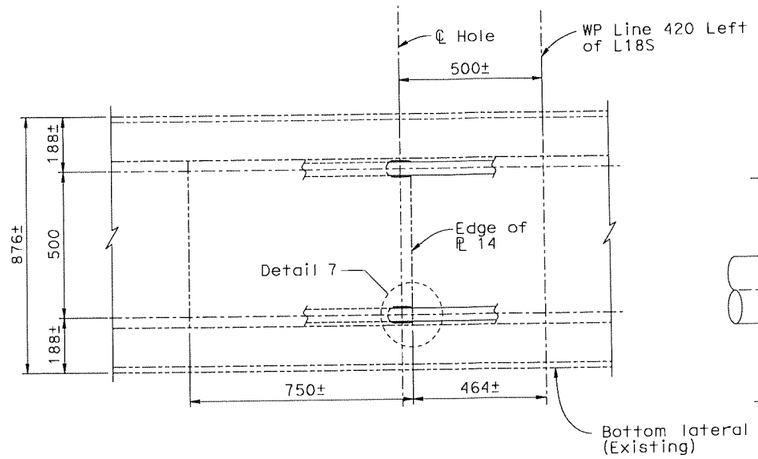

SECTION J-J
1:10

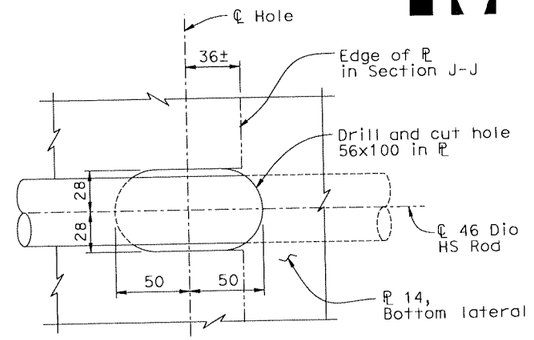

DETAIL 7
1:2

Legend:

------ Indicates existing structure

WP Indicates Working Point

WP* Indicates Work Point at intersection of lower chord ℄ and ℄ Pier YB-3

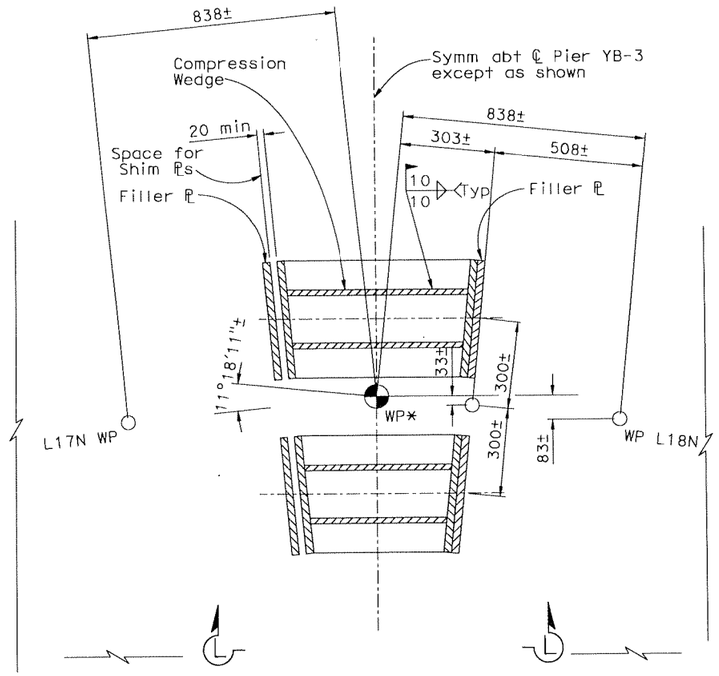

DETAIL 8
1:20

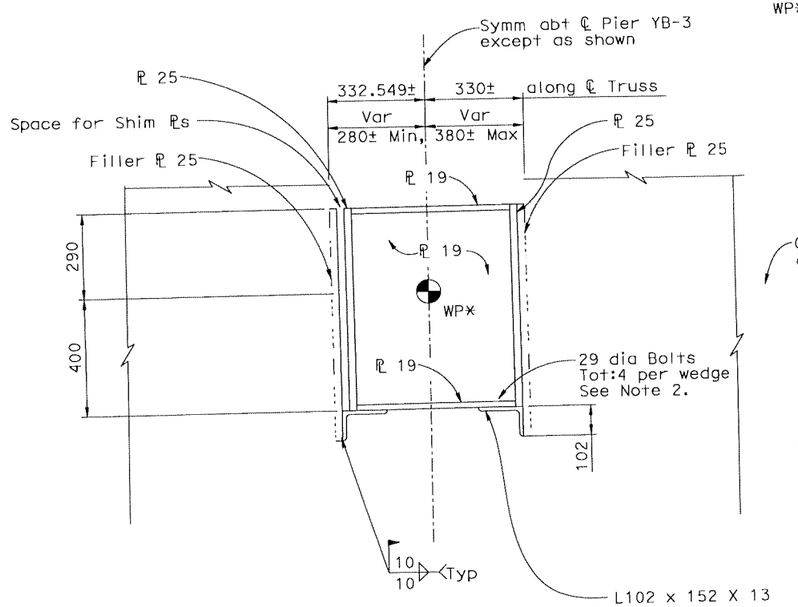

SECTION L-L
1:10

Note:

1. The Contractor shall verify all controlling field dimensions before ordering or fabricating any material.
2. Bolts installed loose in slotted holes. Bolts are to be tightened after RORI and installation of shims.

CONTRACT NO. 04-0120R4

CONTRACT CHANGE ORDER NO 160

SHEET 13 OF 16

DIST	COUNTY	ROUTE	KILOMETER POST TOTAL PROJECT	SHEET No	TOTAL
04	SF	80	12.6/13.2		

Caltrans Metric

REGISTERED CIVIL ENGINEER

12-05-08
PLANS APPROVAL DATE

REGISTERED PROFESSIONAL ENGINEER — Charles Redfield — No. C 27605 — Exp. 12/31/09 — CIVIL — STATE OF CALIFORNIA

The State of California or its officers or agents shall not be responsible for the accuracy or completeness of electronic copies of this plan sheet.

T.Y. LIN / MOFFATT & NICHOL
Two Harrison Street, Suite 500
San Francisco, CA 94105

100% PS&E

FILE => p:\bb\04-012001\etl\dgn\aletd09.dgn
TIME PLOTTED => 3:35:28 PM
DATE PLOTTED => 12/5/2008
USERNAME => ALee

ALL DIMENSIONS ARE IN MILLIMETERS UNLESS OTHERWISE SHOWN

SAN FRANCISCO OAKLAND BAY BRIDGE EAST SPAN SEISMIC SAFETY PROJECT

EAST TIE-IN

EXISTING TRUSS DETAILS NO. 9

DESIGN	BY C. Redfield	CHECKED S. Cheng	
DETAILS	BY D. Singh	CHECKED S. Lee	
QUANTITIES	BY H. Nelson	CHECKED A. Lee	

PREPARED FOR THE STATE OF CALIFORNIA DEPARTMENT OF TRANSPORTATION

M. Sah — PROJECT ENGINEER
S. Abbas — PROJECT MANAGER
CU
EA 0120R4

BRIDGE NO. 34-0006 (TEMP)
KILOMETER POST 12.6

DISREGARD PRINTS BEARING EARLIER REVISION DATES →

REVISION DATES (PRELIMINARY STAGE ONLY): 11/03/01 | 12/05/08

SHEET 130 OF 214

T. Ostrom/M. Whiteside/A. Akinsanya
DESIGN OVERSIGHT

SIGN OFF DATE

DESIGN DETAIL SHEET (METRIC) (REV. 3/1/98)
©DATE© ©TIME© Pen Table File

ORIGINAL SCALE IN MILLIMETERS FOR REDUCED PLANS 0 10 20 30 40 50 60 70 80 90 100

FILE => p:\bb\04-012001\etl\dgn\aletd09.dgn

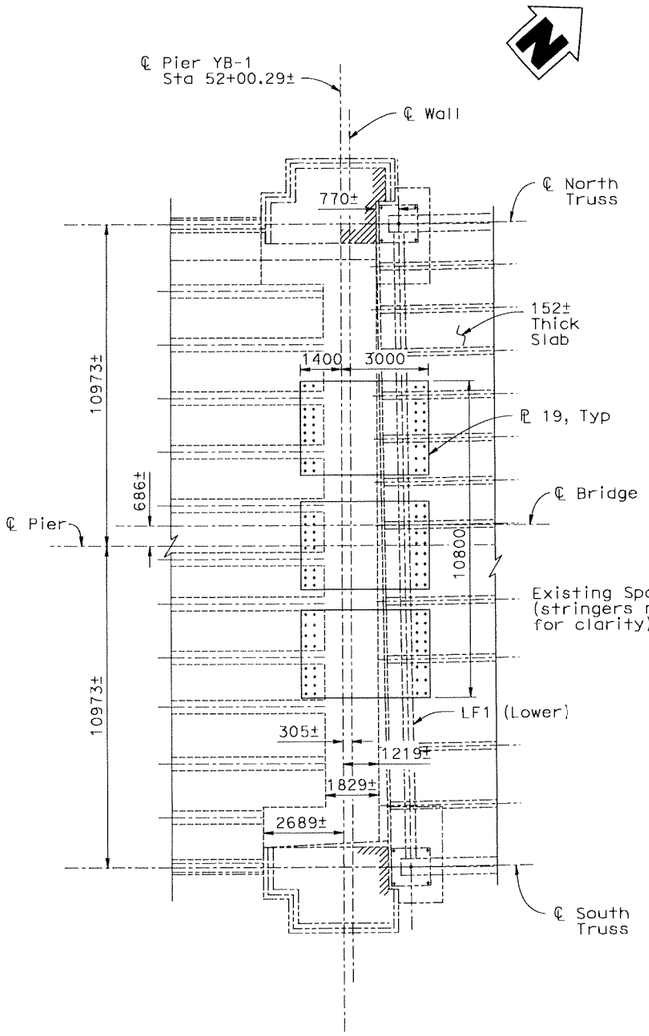

DETAIL 4: PLAN LOWER DECK

1:100

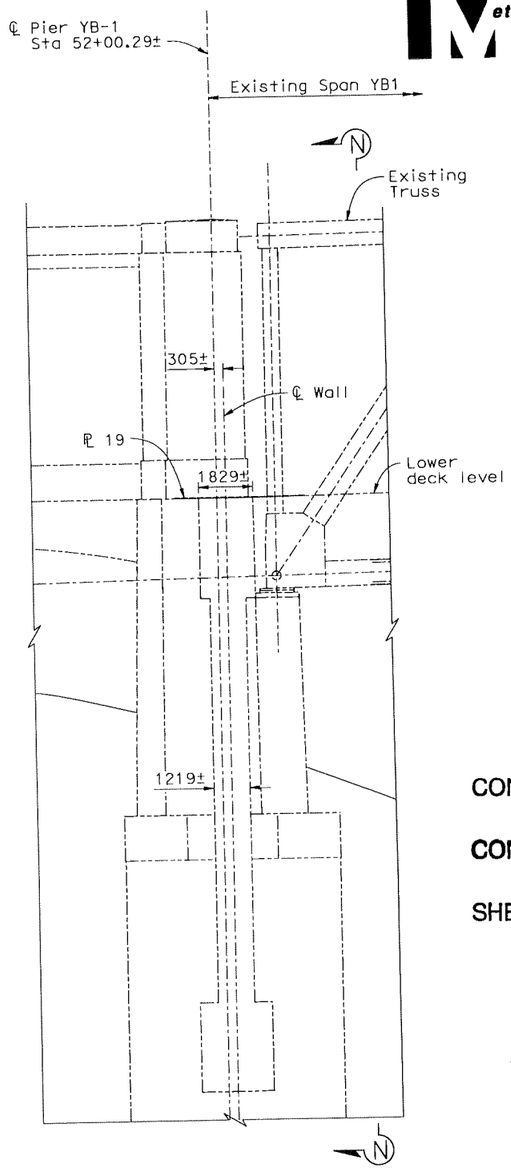

ELEVATION VIEW

1:100

DIST	COUNTY	ROUTE	KILOMETER POST TOTAL PROJECT	SHEET No	TOTAL
04	SF	80	12.6/13.2		

REGISTERED CIVIL ENGINEER

12-05-08

PLANS APPROVAL DATE

REGISTERED PROFESSIONAL ENGINEER — Charles Redfield — No. C 27605 — Exp. 12/31/09 — CIVIL — STATE OF CALIFORNIA

The State of California or its officers or agents shall not be responsible for the accuracy or completeness of electronic copies of this plan sheet.

T.Y. LIN / MOFFATT & NICHOL
Two Harrison Street, Suite 500
San Francisco, CA 94105

CONTRACT NO. 04-0120R4

CONTRACT CHANGE ORDER NO 160

SHEET 14 OF 16

LEGENDS:

-------- Indicates existing structure

Note:

1. The Contractor shall verify all controlling field dimensions before ordering or fabricating any material.
2. For plate details and bolt pattern, see "Existing Truss Details No. 12" sheet.
3. For Section N-N, see "Existing Truss Details No. 11" sheet.
4. Install plates after bridge closure.

100% PS&E

FILE => p:\bb\04-012001\eti\dgn\aletd10.dgn
TIME PLOTTED => 3:35:11 PM
DATE PLOTTED => 12/5/2008
USERNAME => Alee

ALL DIMENSIONS ARE IN MILLIMETERS UNLESS OTHERWISE SHOWN

SAN FRANCISCO OAKLAND BAY BRIDGE
EAST SPAN SEISMIC SAFETY PROJECT

EAST TIE-IN

EXISTING TRUSS DETAILS NO. 10

DESIGN	BY C. Redfield	CHECKED R. Nutt	
DETAILS	BY P. Zhao, S. Lee	CHECKED A. Lee	
QUANTITIES	BY H. Nelson	CHECKED A. Lee	

PREPARED FOR THE STATE OF CALIFORNIA
DEPARTMENT OF TRANSPORTATION

M. Sah — PROJECT ENGINEER
S. Abbas — PROJECT MANAGER

CU 04 EA 0120R4

BRIDGE NO. 34-0006 (TEMP)
KILOMETER POST 12.6

DISREGARD PRINTS BEARING EARLIER REVISION DATES

REVISION DATES (PRELIMINARY STAGE ONLY): 11/03/07 12/05/08

SHEET 131 OF 214

T. Ostrom/M. Whiteside/A. Akinsanya
DESIGN OVERSIGHT

SIGN OFF DATE

DESIGN DETAIL SHEET (METRIC) (REV. 3/1/98)
℗DATE℗ ℗TIME℗ Pen Table File

ORIGINAL SCALE IN MILLIMETERS FOR REDUCED PLANS 0 10 20 30 40 50 60 70 80 90 100

FILE => p:\bb\04-012001\eti\dgn\aletd10.dgn

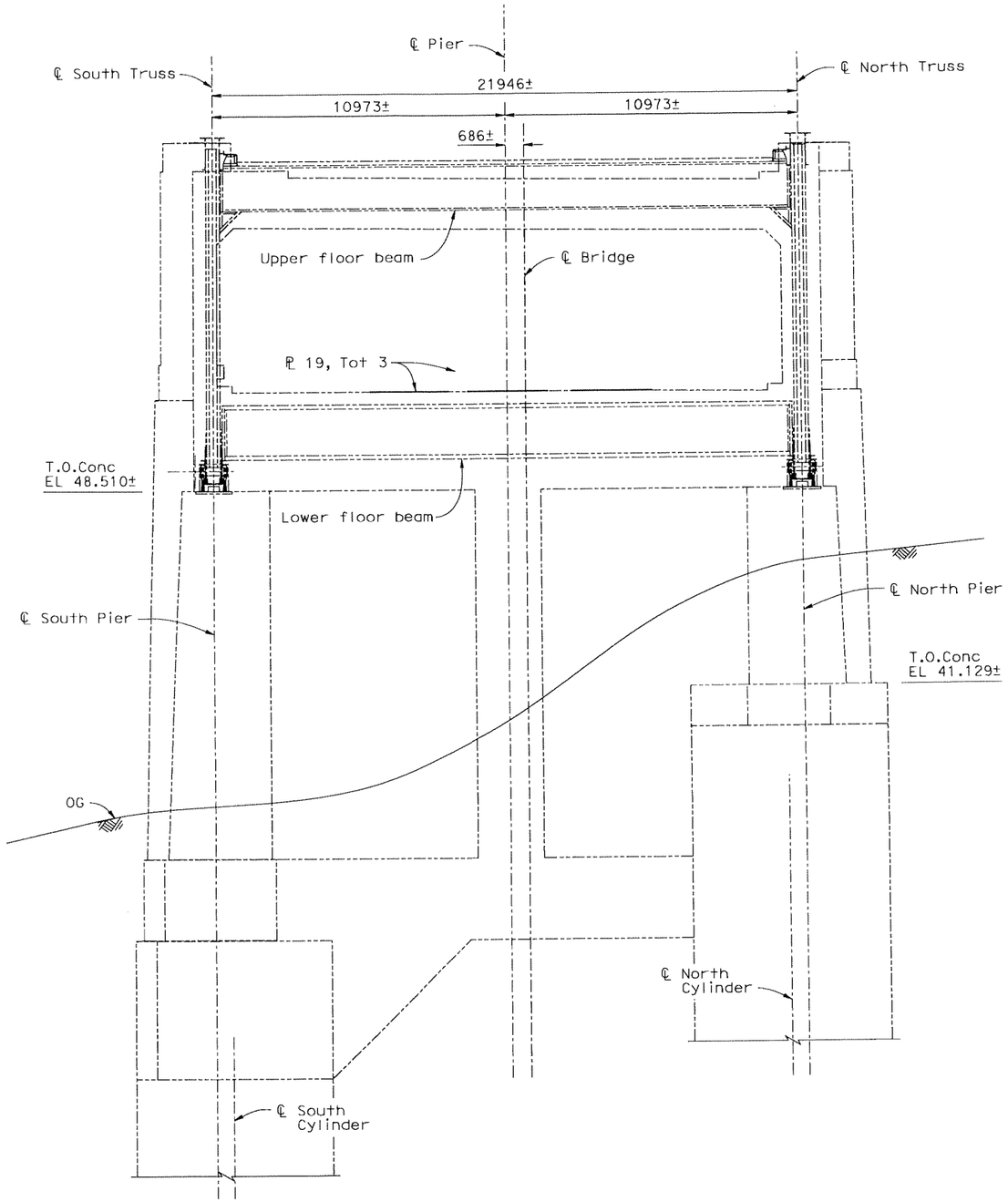

SECTION N-N

1:100

DIST	COUNTY	ROUTE	KILOMETER POST TOTAL PROJECT	SHEET No	TOTAL
04	SF	80	12.6/13.2		

REGISTERED CIVIL ENGINEER

12-05-08
PLANS APPROVAL DATE

REGISTERED PROFESSIONAL ENGINEER — Charles Redfield — No. C 27605 — Exp. 12/31/09 — CIVIL — STATE OF CALIFORNIA

The State of California or its officers or agents shall not be responsible for the accuracy or completeness of electronic copies of this plan sheet.

T.Y. LIN / MOFFATT & NICHOL
Two Harrison Street, Suite 500
San Francisco, CA 94105

CONTRACT NO. 04-0120R4

CONTRACT CHANGE ORDER NO 160

SHEET 15 OF 16

LEGENDS:

-------- Indicates existing structure

Notes:

1. The Contractor shall verify all controlling field dimensions before ordering or fabricating any material.
2. For plate details and bolt pattern, see "Existing Truss Details No. 12" sheet.

ALL DIMENSIONS ARE IN MILLIMETERS UNLESS OTHERWISE SHOWN

SAN FRANCISCO OAKLAND BAY BRIDGE
EAST SPAN SEISMIC SAFETY PROJECT

EAST TIE-IN

EXISTING TRUSS DETAILS NO. 11

DESIGN	BY C. Redfield	CHECKED R. Nutt	
DETAILS	BY P. Zhao, S. Lee	CHECKED A. Lee	
QUANTITIES	BY H. Nelson	CHECKED A. Lee	

T. Ostrom/M. Whiteside/A. Akinsanya
DESIGN OVERSIGHT

SIGN OFF DATE

PREPARED FOR THE STATE OF CALIFORNIA DEPARTMENT OF TRANSPORTATION

M. Sah
PROJECT ENGINEER
S. Abbas
PROJECT MANAGER

CU
EA 0120R4

BRIDGE NO. 34-0006 (TEMP)
KILOMETER POST 12.6

DISREGARD PRINTS BEARING EARLIER REVISION DATES →
REVISION DATES (PRELIMINARY STAGE ONLY): 11/09/07 12/05/08

SHEET 131A OF 214

DESIGN DETAIL SHEET (METRIC) (REV. 3/1/98)
@DATE@ @TIME@ Pen Table File

ORIGINAL SCALE IN MILLIMETERS FOR REDUCED PLANS 0 10 20 30 40 50 60 70 80 90 100

FILE => p:\bb\04-012001\eti\dgn\aletd11.dgn

100% PS&E

FILE => p:\bb\04-012001\eti\dgn\aletd11.dgn
TIME PLOTTED => 3:35:13 PM
DATE PLOTTED => 12/5/2008
USERNAME => ALee

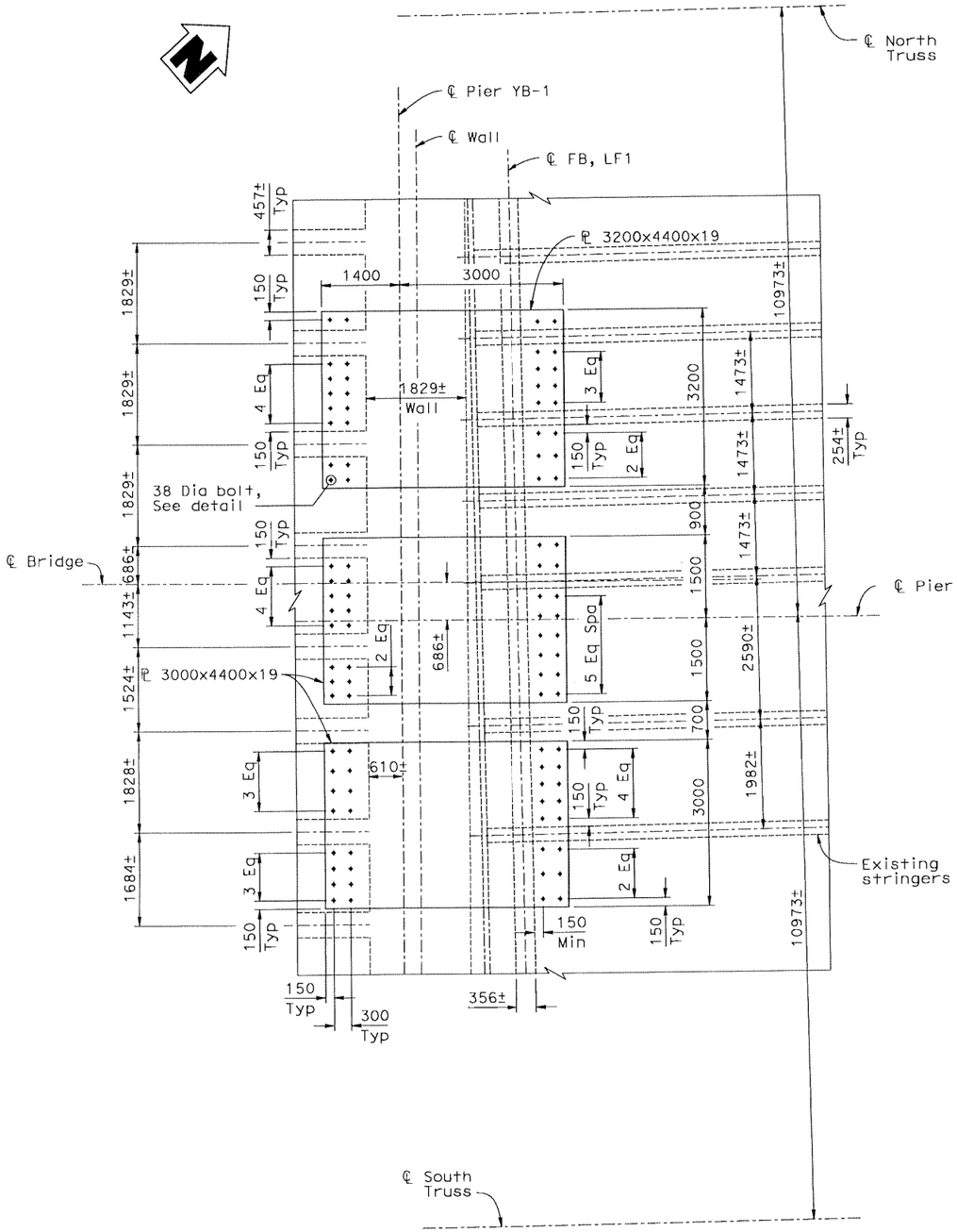

PLATE PLAN - LOWER DECK

1:50

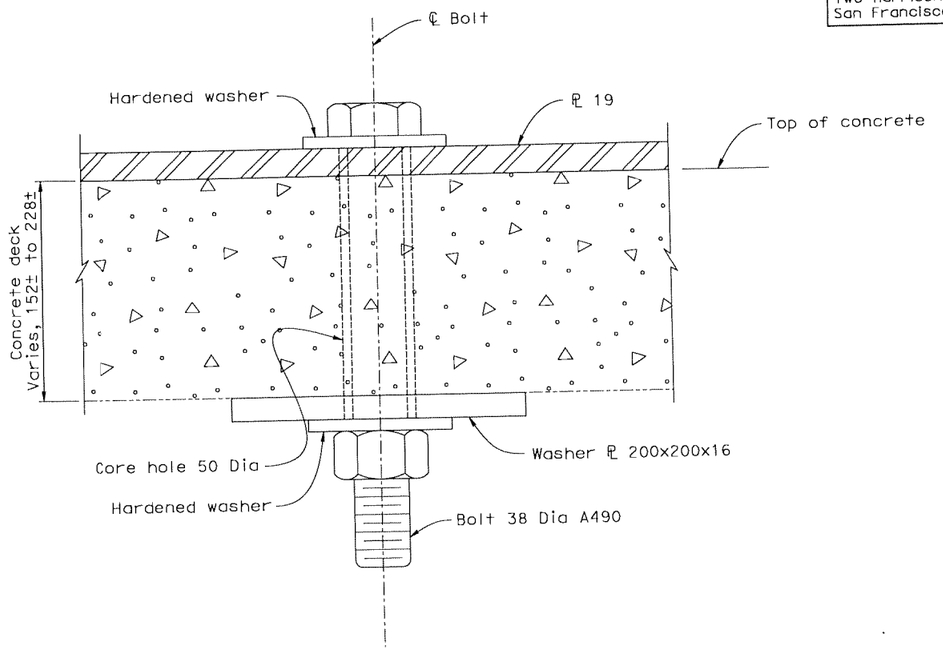

BOLT DETAIL

1:2

Tot: 32 bolts per plate

Caltrans Metric

DIST	COUNTY	ROUTE	KILOMETER POST TOTAL PROJECT	SHEET No	TOTAL
04	SF	80	12.6/13.2		

REGISTERED CIVIL ENGINEER

12-05-08
PLANS APPROVAL DATE

REGISTERED PROFESSIONAL ENGINEER — Charles Redfield — No. C 27605 — Exp. 12/31/09 — CIVIL — STATE OF CALIFORNIA

The State of California or its officers or agents shall not be responsible for the accuracy or completeness of electronic copies of this plan sheet.

T.Y. LIN / MOFFATT & NICHOL
Two Harrison Street, Suite 500
San Francisco, CA 94105

CONTRACT NO. 04-0120R4

CONTRACT CHANGE ORDER NO 166

SHEET 16 OF 16

LEGENDS:

-------- Indicates existing structure

Note:

1. The Contractor shall verify all controlling field dimensions before ordering or fabricating any material.

100% PS&E

FILE => p:\bb\04-012001\etl\dgn\aletd12.dgn
TIME PLOTTED => 3:35:15 PM
DATE PLOTTED => 12/5/2008
USERNAME => Alee

T. Ostrom/M. Whiteside/A. Akinsanya, DESIGN OVERSIGHT	DESIGN	BY C. Redfield	CHECKED R. Nutt
SIGN OFF DATE	DETAILS	BY P. Zhao, S. Lee	CHECKED A. Lee
	QUANTITIES	BY H. Nelson	CHECKED A. Lee

PREPARED FOR THE STATE OF CALIFORNIA
DEPARTMENT OF TRANSPORTATION

M. Sah, PROJECT ENGINEER
S. Abbas, PROJECT MANAGER
CU
EA 0120R4

BRIDGE NO. 34-0006 (TEMP)
KILOMETER POST 12.6

ALL DIMENSIONS ARE IN MILLIMETERS UNLESS OTHERWISE SHOWN

ORIGINAL SCALE IN MILLIMETERS FOR REDUCED PLANS 0 10 20 30 40 50 60 70 80 90 100

DISREGARD PRINTS BEARING EARLIER REVISION DATES

REVISION DATES (PRELIMINARY STAGE ONLY): 11/05/07 | 12/05/08

SAN FRANCISCO OAKLAND BAY BRIDGE
EAST SPAN SEISMIC SAFETY PROJECT

EAST TIE-IN

EXISTING TRUSS DETAILS NO. 12

SHEET 131B OF 214

FILE => p:\bb\04-012001\etl\dgn\aletd12.dgn

DESIGN DETAIL SHEET (METRIC) (REV. 3/1/98)
@DATE@ @TIME@ Pen Table File

STATE OF CALIFORNIA - DEPARTMENT OF TRANSPORTATION

CONTRACT CHANGE ORDER MEMORANDUM

DATE: 3/5/2009

TO: MIKE FORNER / DEANNA VILCHECK	FILE: E.A. 04 - 0120R4
FROM: BILL CASEY	CO-RTE-PM SF-80-12.6/13.2
	FED. NO. ACBRIM-080-1(097)N
CCO#: 160 SUPPLEMENT#: 0 Category Code: CHPA	CONTINGENCY BALANCE (incl. this change) $69,517,830.05
COST: $350,000.00 INCREASE ☑ DECREASE ☐	HEADQUARTERS APPROVAL REQUIRED? ☑ YES ☐ NO
SUPPLEMENTAL FUNDS PROVIDED: $0.00	IS THIS REQUEST IN ACCORDANCE WITH ENVIRONMENTAL DOCUMENTS? ☑ YES ☐ NO
CCO DESCRIPTION: ETI Existing Truss Retrofit	**PROJECT DESCRIPTION:** CONSTRUCT ROUTE 80 TEMP BYPASS STRUCTURE

Original Contract Time:	Time Adj. This Change:	Previously Approved CCO Time Adjustments:	Percentage Time Adjusted: (including this change)	Total # of Unreconciled Deferred Time CCO(s): (including this change)
475 Day(s)	DEF Day(s)	1195 Day(s)	252 %	8

THIS CHANGE ORDER PROVIDES FOR:

compensating the contractor for furnishing, fabricating, and delivering all material and structural steel members required to implement truss modifications at existing Spans YB1, YB3 and YB4.

This project, the Temporary Bypass Structure (TBS), was awarded in March 2004 to construct a detour that will allow for the tie in of the new east span of the San Francisco Oakland Bay Bridge to Yerba Buena Island. The TBS encompasses three main structures, the East Tie-In to the existing bridge, the West Tie-In (WTI) to Yerba Buena Island, and the Viaduct structure between the two tie ins.

A December 14, 2006 Department strategy memorandum, approved by Tony Anziano, Toll Bridge Program Manager, and Richard Land, Chief Engineer, recommended the design of the ETI and WTI structures and enhancement of the Viaduct be assumed by the Department as opposed to the as-bid performance based contractor design . Based on this memorandum, the design of the structure was changed from a design that incorporated the existing steel truss bridge with the new structure to a design that replaces the existing structure with a new structure (roll out / roll in).

This work is required by the designer in order to provide additional stability to existing spans YB-1, YB-2 and YB-3 once Span YB-4 is rolled out, and to strengthen Span YB-4 to permit the planned roll out during the Labor Day traffic switch to the temporary bypass structure.

Compensation for this change shall be performed as Extra work at force account for an estimated cost of $350,000.00 which can be financed through the Contingency Fund. A cost analysis is in the project files.

Time impacts to the project schedule as a result of this change are unknown at this time and as such an assessment of said impacts will be deferred until such time as they can be appropriately determined in accordance with the Contract Documents.

Adjustment of contract time is deferred pending completion of the work specified in this change as it may become the controlling operation in accordance with Section 8-1.07 "Liquidated Damages", of the Standard Specifications and Section 10-1.20 "Time Related Overhead (TRO)" of the Special Provisions.

Compensation for delays resulting from this work will be made in accordance with Section 8-1.09 "Right of Way Delays" of the Standard Specifications and Section 10-1.20 "Time Related Overhead" of the Special Provisions.

This change was requested by Mike Whiteside, YBI Coordination Engineer, on January 22, 2009 and concurred by Alec Melkonians - Asst. Project Manager and Hong Wong - Project Engineer.

Maintenance concurrence is not required, as this work does not affect any permanent roadway features.

010374 JUN-18

RECEIVED

ADA Notice: For individuals with sensory disabilities, this document is available in alternate formats. For information call: (916) 654-6410 or TDD (916) 654-3880 or write Records and Forms Management, 1120 N Street, MS-89, Sacramento, CA 95814.

CONCURRED BY:			
Construction Engineer:		Date	
Bridge Engineer:	Mike Whiteside, Toll Bridge Design	Date	1/22/09
Project Engineer:	Hong Wong, PE	Date	3/9/09
Project Manager:	Alec Melkonians	Date	3/6/09
FHWA Rep.:		Date	
Environmental:		Date	
Other (specify):		Date	
Other (specify):		Date	
District Prior Approval By:		Date	
HQ (Issue Approve) By:	Bob Molera, HQ CCO Engineer	Date	
Resident Engineer's Signature:		Date	

3-20-09

ESTIMATE OF COST

	THIS REQUEST	TOTAL TO DATE
ITEMS	$0.00	$0.00
FORCE ACCOUNT	$350,000.00	$350,000.00
AGREED PRICE	$0.00	$0.00
ADJUSTMENT	$0.00	$0.00
TOTAL	$350,000.00	$350,000.00

FEDERAL PARTICIPATION

☐ PARTICIPATING ☐ PARTICIPATING IN PART ☐ NONE
☐ NON-PARTICIPATING (MAINTENANCE) ☐ NON-PARTICIPATING

FEDERAL SEGREGATION (if more than one Funding Source or P.I.P. type)
☐ CCO FUNDED PER CONTRACT ☐ CCO FUNDED AS FOLLOWS

FEDERAL FUNDING SOURCE PERCENT

ADA Notice: For individuals with sensory disabilities, this document is available in alternate formats. For information call: (916) 654-6410 or TDD (916) 654-3880 or write Records and Forms Management, 1120 N Street, MS-89, Sacramento, CA 95814.

STATE OF CALIFORNIA - DEPARTMENT OF TRANSPORTATION

CONTRACT CHANGE ORDER

Change Requested by: Engineer

CCO 161	Suppl. No. 0	Contract No. 04 - 0120R4	Road SF-80-12.6/13.2	FED. AID LOC.: ACBRIM-080-1(097)N

To: CC MYERS INC

You are directed to make the following changes from the plans and specifications or do the following described work not included in the plans and specifications for this contract. ***NOTE: This change order is not effective until approved by the Engineer.***

Description of work to be done, estimate of quantities and prices to be paid. (Segregate between additional work at contract price, agreed price and force account.) Unless otherwise stated, rates for rental of equipment cover only such time as equipment is actually used and no allowance will be made for idle time. This last percentage shown is the net accumulated increase or decrease from the original quantity in the Engineer's Estimate.

Extra Work at Lump Sum:

As authorized by the Engineer and as shown on Sheets 2 and 3 of this change, construct a temporary Eastbound I-80 on-ramp on the T7 alignment line station of the West Tie-In Temporary Bypass Structure (TBS) at Hillcrest Road.

For this work, the Contractor shall be compensated a lump sum of $ 403,965.00. The work includes but is not limited to placing aggregate base and asphalt concrete, installing temporary k-rails and striping, grinding and removing existing pavement and concrete, and all moving of k-rail for access purposes. This sum constitutes full and final compensation, including markups, for all costs associated with the work of this change.

Total Cost of Extra Work at Lump Sum $403,965.00

Estimated Cost: **Increase** ☑ **Decrease** ☐ **$403,965.00**

By reason of this order the time of completion will be adjusted as follows: 0 days

Submitted by

Signature	Resident Engineer	Date
	BILL CASEY	11-4-08

Approval Recommended by

Signature	Area Construction Manager	Date
Deanna Vilcheck	DEANNA VILCHECK	11/6/08

Engineer Approval by

Signature	Area Construction Manager	Date
Deanna Vilcheck	DEANNA VILCHECK	11/25/08

We the undersigned contractor, have given careful consideration to the change proposed and agree, if this proposal is approved, that we will provide all equipment, furnish the materials, except as may otherwise be noted above, and perform all services necessary for the work above specified, and will accept as full payment therefor the prices shown above.

NOTE: **If you, the contractor, do not sign acceptance of this order, your attention is directed to the requirements of the specifications as to proceeding with the ordered work and filing a written protest within the time therein specified.**

Contractor Acceptance by

Signature	(Print name and title)	Date
	Daniel E. Hamick, President	11/19/08

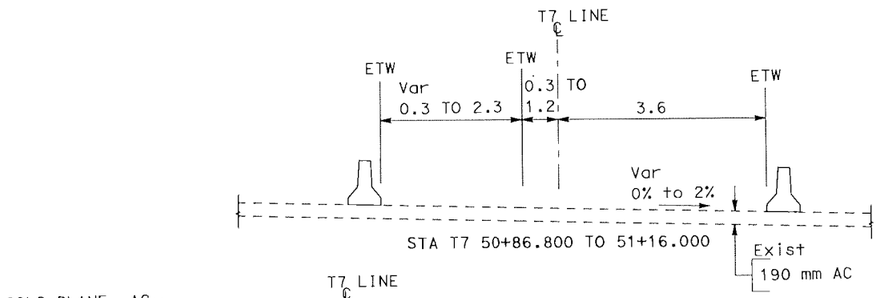

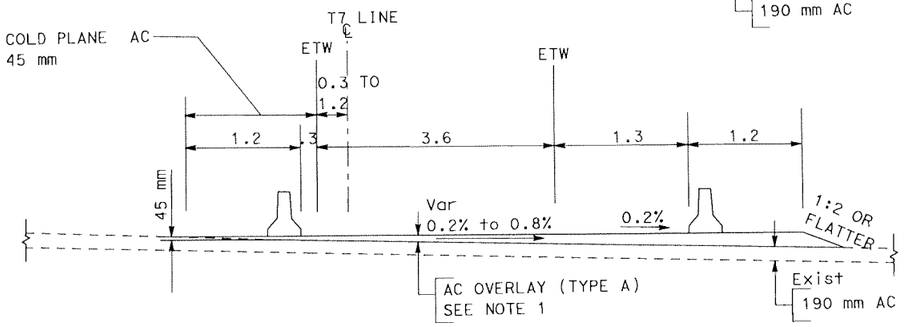

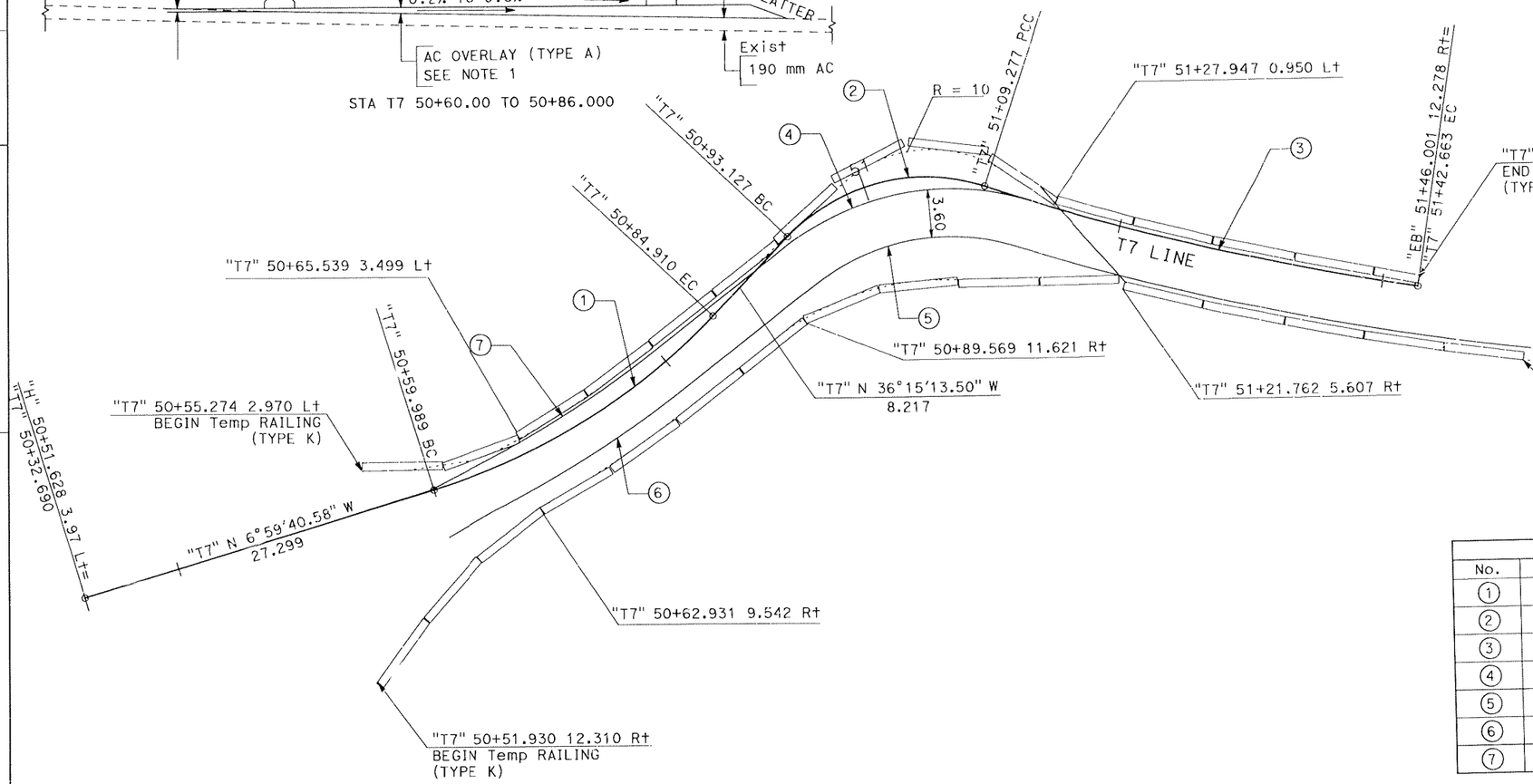

DIST	COUNTY	ROUTE	KILOMETER POST TOTAL PROJECT	SHEET No	TOTAL SHEETS
04	SF	80	12.6/13.2		

REGISTERED CIVIL ENGINEER

PLANS APPROVAL DATE

REGISTERED PROFESSIONAL ENGINEER
Johnny C. Kuo
No. C 60036
Exp. 06-30-08
CIVIL
STATE OF CALIFORNIA

PB AMERICAS, INC.
303 Second St., Suite 700N
San Francisco, CA 94107-1317

The State of California or its officers or agents shall not be responsible for the accuracy or completeness of electronic copies of this plan sheet.

Caltrans now has a web site! To get to the web site, go to http://www.dot.ca.gov

NOTES:

1. SEE T7 LINE PROFILE FOR AMOUNT OF OVERLAY TO MAINTAIN 2% CROSS SLOPE.

CONTRACT NO. 04-0120R4

CONTRACT CHANGE ORDER NO 161

SHEET 2 OF 3

CURVE DATA						
No.	R	Δ	T	L	N	E
①	48.80	29°15'33"	12.74	24.92	647087.654	1835877.311
②	14.20	65°09'50"	9.07	16.15	647131.536	1835923.255
③	200.34	09°32'54"	16.73	33.39	647235.251	1835735.455
④	20.00	55°58'08"	10.63	19.54	647132.178	1835930.201
⑤	16.40	55°58'08"	8.71	16.02	647132.178	1835930.201
⑥	83.50	10°40'45"	7.80	15.56	647073.807	1835848.113
⑦	79.90	14°46'33"	10.36	20.61	647073.807	1835848.113

ALL DIMENSIONS ARE IN METERS UNLESS OTHERWISE SHOWN

DETOUR PLAN

SCALE AS SHOWN

DE-1

DATE	REVISED BY	DATE REVISED

CALCULATED/DESIGNED BY

CHECKED BY

DESIGN OVERSIGHT
C. Hong Wong

STATE OF CALIFORNIA - DEPARTMENT OF TRANSPORTATION
Caltrans

LAST REVISION DATE PLOTTED => $DATE
00-00-00 TIME PLOTTED => $TIME

RELATIVE BORDER SCALE
IN MILLIMETERS
0 20 40 60 80

PLAN

DGN FILE => $REQUEST
USERNAME => $USER

CU 04251

EA 0120R1

TEMPORARY PAVEMENT DELINEATION

SHEET No.	LINE	BEGIN STATION	END STATION	DETAIL No.	100 mm WHITE SOLID	100 mm YELLOW SOLID	200 mm WHITE SOLID	PAVEMENT MARKINGS 300 mm WHITE SOLID	PAVEMENT MARKERS TYPE H RETRO-REFLECTIVE	PAVEMENT MARKERS TYPE A NON-REFLECTIVE	REMOVE TRAFFIC STRIPE	PAINT PAVEMENT MARKING (2-COAT)
					M	M	M	M2	EA	EA	M	M2
DE-3	T7	50+59.989	51+42.663	25A		83.0			12			
DE-3	T7	50+59.989	51+56.492	27B	97.0							1.1
DE-3	T7	51+42.663	51+42.663	LIMIT LINE								
TOTAL					97.0	83.0			12			1.1

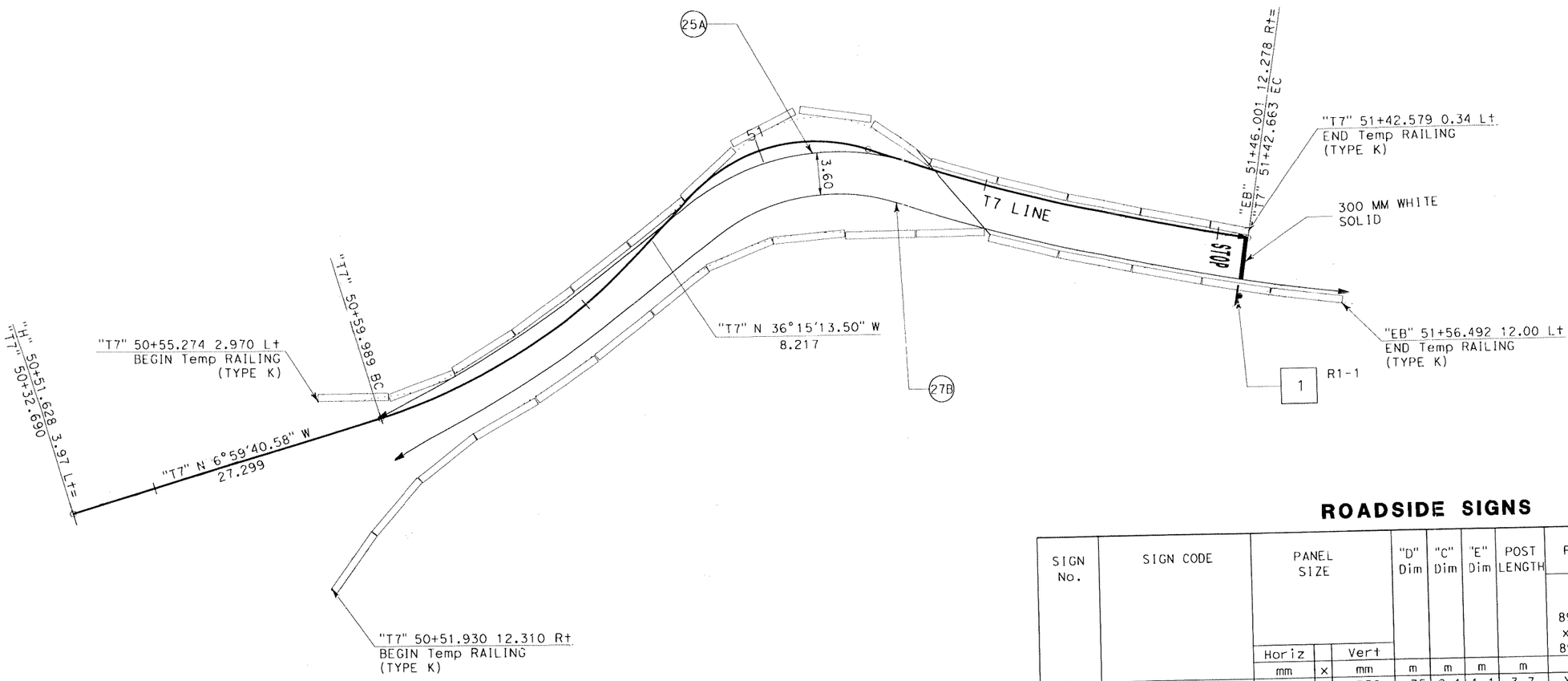

ROADSIDE SIGNS

SIGN No.	SIGN CODE	PANEL SIZE Horiz		PANEL SIZE Vert	"D" Dim	"C" Dim	"E" Dim	POST LENGTH	POST SIZE 89 x 89	POST SIZE 89 x 140	POST SIZE 140 x 140	ROADSIDE SIGN ONE POST	ROADSIDE SIGN TWO POST	ROADSIDE SIGN RELOCATE	ROADSIDE SIGN RESET	ROADSIDE SIGN REMOVE
		mm	x	mm	m	m	m	m	mm x mm			EA	EA	EA	EA	EA
1	R1-1	750	x	750	.75	2.1	1.1	3.7	X			1				
TOTAL												1				

PLAN
SCALE: 1:200

ALL DIMENSIONS ARE IN METERS UNLESS OTHERWISE SHOWN

CONTRACT NO. 04-0120R4

CONTRACT CHANGE ORDER NO 161

SHEET 3 OF 3

DETOUR PLAN
PAVEMENT DELINEATION AND SIGN PLAN

SCALE AS SHOWN

DE-3

DIST	COUNTY	ROUTE	KILOMETER POST TOTAL PROJECT	SHEET NO	TOTAL SHEETS
04	SF	80	12.6/13.2		

REGISTERED CIVIL ENGINEER

PLANS APPROVAL DATE

REGISTERED PROFESSIONAL ENGINEER — Johnny C. Kuo — No. C 60036 — Exp. 06-30-08 — CIVIL — STATE OF CALIFORNIA

PB AMERICAS, INC.
303 Second St., Suite 700N
San Francisco, CA 94107-1317

The State of California or its officers or agents shall not be responsible for the accuracy or completeness of electronic copies of this plan sheet.

Caltrans now has a web site! To get to the web site, go to http://www.dot.ca.gov

DESIGN OVERSIGHT — C. Hong Wong

CALCULATED/DESIGNED BY

CHECKED BY

DATE REVISED BY

STATE OF CALIFORNIA - DEPARTMENT OF TRANSPORTATION

Caltrans

RELATIVE BORDER SCALE IS IN MILLIMETERS 0 20 40 60 80

DGN FILE => T:\13103\SouthDetour\CCO WTI-2\Transmit\Final Submittal 20080303\mg003.dgn
USERNAME => reyes!

CU 04251

EA 0120R1

LAST REVISION DATE PLOTTED => 3/11/2008
00-00-00 TIME PLOTTED => 11:30:32 PM

STATE OF CALIFORNIA - DEPARTMENT OF TRANSPORTATION

CONTRACT CHANGE ORDER

Change Requested by: Engineer

CCO 162	Suppl. No. 0	Contract No. 04 - 0120R4	Road SF-80-12.6/13.2	FED. AID LOC.: ACBRIM-080-1(097)N

To: CC MYERS INC

You are directed to make the following changes from the plans and specifications or do the following described work not included in the plans and specifications for this contract. ***NOTE: This change order is not effective until approved by the Engineer.***

Description of work to be done, estimate of quantities and prices to be paid. (Segregate between additional work at contract price, agreed price and force account.) Unless otherwise stated, rates for rental of equipment cover only such time as equipment is actually used and no allowance will be made for idle time. This last percentage shown is the net accumulated increase or decrease from the original quantity in the Engineer's Estimate.

Adjustment of Compensation at Lump Sum:

Provide, install, engineer, and maintain temporary shoring for the slope at the northern end of the excavation at Skid Bent Foundations A3W and A3E as shown on Sheets 2, 3, and 4 of this Change Order. This temporary shoring is in addition to the excavation, sloping, and temporary shoring included under Contract Change Order No. 90.

For this work, the contractor will be compensated a lump sum of $268,235.00. The sum includes full compensation for all additional mobilization, demobilization, and remobilization costs necessary to perform this work, and includes all associatec fine grading, excavation, and hauling costs. Any excavated soil, including drill soils from the soil nail / rock dowels, will be either stored on site, or at the Contractor's stockpile site in accordance with the provisions of Contract Change Order No. 90.
The sum also includes full compensation for all additional mobilization, demobilization, and remobilization costs necessary to complete the Skid Bent foundation work in this area.

This sum constitutes full and final compensation for all costs, including all markups, associated with the work of this change

Total Cost of Adjustment of Compensation at Lump Sum $268,235.00

Estimated Cost: **Increase** ☑ **Decrease** ☐ **$268,235.00**

By reason of this order the time of completion will be adjusted as follows: 0 days

Submitted by

Signature	Resident Engineer	Date
	BILL CASEY	3-6-09

Approval Recommended by

Signature	Area Construction Manager	Date
Deanna Vilcheck	DEANNA VILCHECK	3/9/09

Engineer Approval by

Signature	Area Construction Manager	Date
Deanna Vilcheck	DEANNA VILCHECK	3/9/09

We the undersigned contractor, have given careful consideration to the change proposed and agree, if this proposal is approved, that we will provide all equipment, furnish the materials, except as may otherwise be noted above, and perform all services necessary for the work above specified, and will accept as full payment therefor the prices shown above.

NOTE: If you, the contractor, do not sign acceptance of this order, your attention is directed to the requirements of the specifications as to proceeding with the ordered work and filing a written protest within the time therein specified.

Contractor Acceptance by

Signature	(Print name and title)	Date
	DANIEL E. HUNICK, PRESIDENT	3/17/09

NOTES:
1. (2) SOIL NAILS/ROCK DOWELS NOT SHOWN IN PLAN.
2. SEE DRAWING SH-22 FOR GENERAL NOTES.

CONTRACT NO. 04-0120R4

CONTRACT CHANGE ORDER NO 162

SHEET 2 OF 4

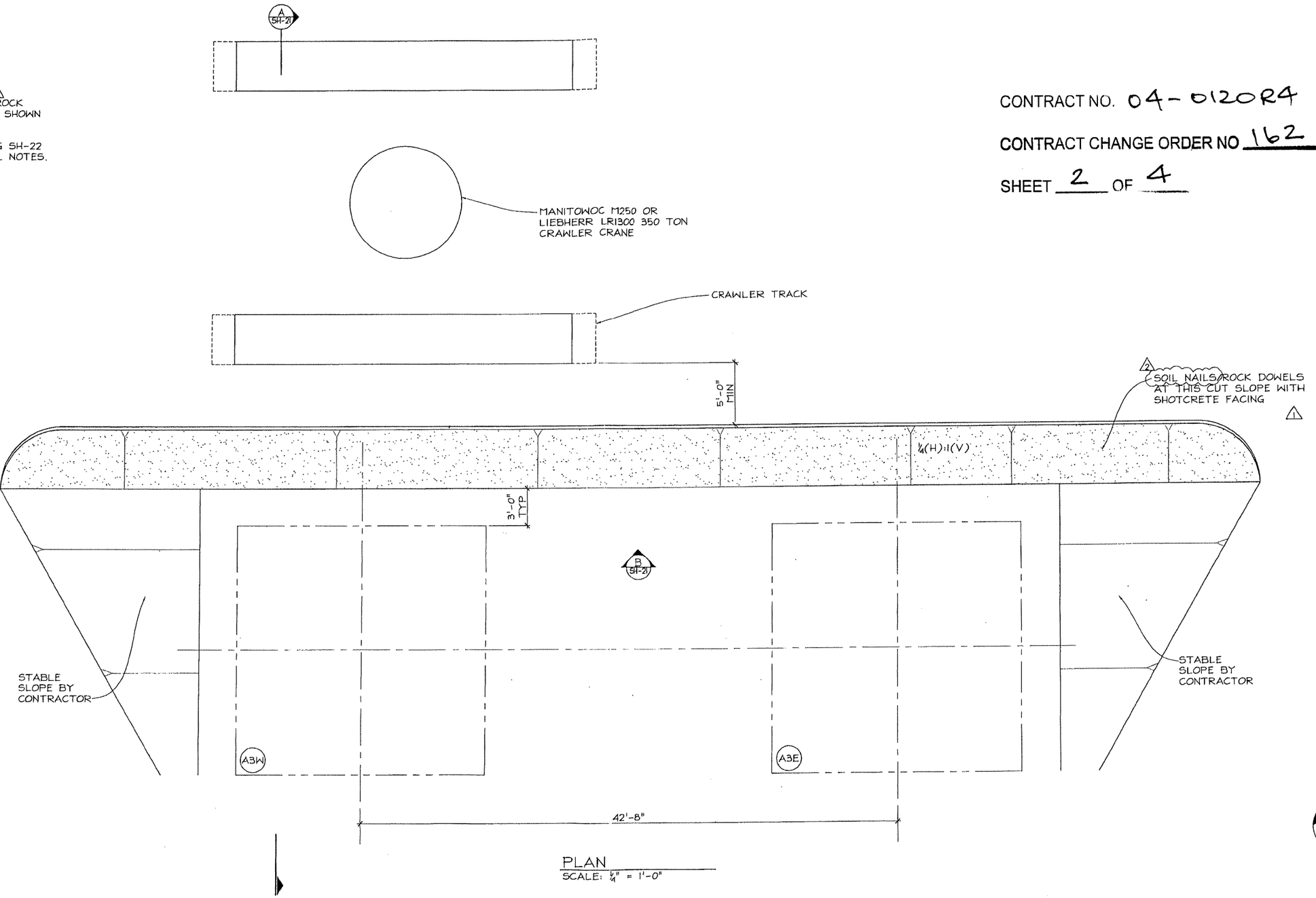

PLAN
SCALE: 1/4" = 1'-0"

NO.	DATE	REVISIONS	BY	CK
2	1-8-09	MODIFY SUPPORT FOR GROUND CONDITIONS	ESL	ESL
1	8-27-08	ADD SHOTCRETE FACING	HC	ESL

OWNER: Caltrans
GRAPHIC SCALE: 0 ½" 1" 1½" 2" 2½" 3"
CADD FILE NAME: 8029_SH20.DWG
PLOT DATE:

CLIENT: C.C. MYERS, INC.
APPROVED: DATE:

BLCE
BERTI-LINDQUIST CONSULTING ENGINEERS, INC.
920 COUNTRY CLUB DRIVE, SUITE 2A, MORAGA CA, 94556
(925) 247-9000 FAX (925) 247-9010
DESIGNED ESL CHECKED DJB DRAWN HC

REGISTERED PROFESSIONAL ENGINEER E.S. LINDQUIST NO. 056713 EXP. 6-30-09 STATE OF CALIFORNIA CIVIL

SAN FRANCISCO OAKLAND BAY BRIDGE
EAST SPAN SEISMIC SAFETY PROJECT
EAST TIE-IN A3W & A3E EXCAVATION
KILOMETER POST 12.6
PLAN

CONTRACT
DATE AUG. 18, 2008
JOB 8029

SHEET SH-20
OF DRAWING NO. 1 OF 3
REVISION 2 JAN. 8, 2009
SCALE 1/4" = 1'-0"

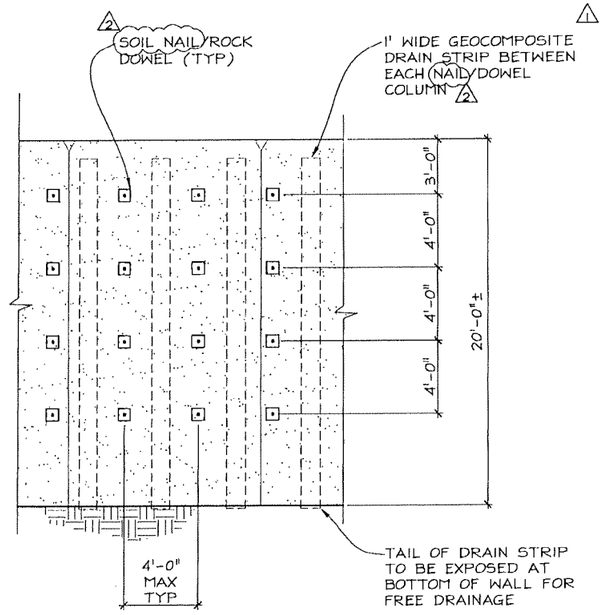

B SH-20 TYPICAL PARTIAL ELEVATION
SCALE: 1/4" = 1'-0"

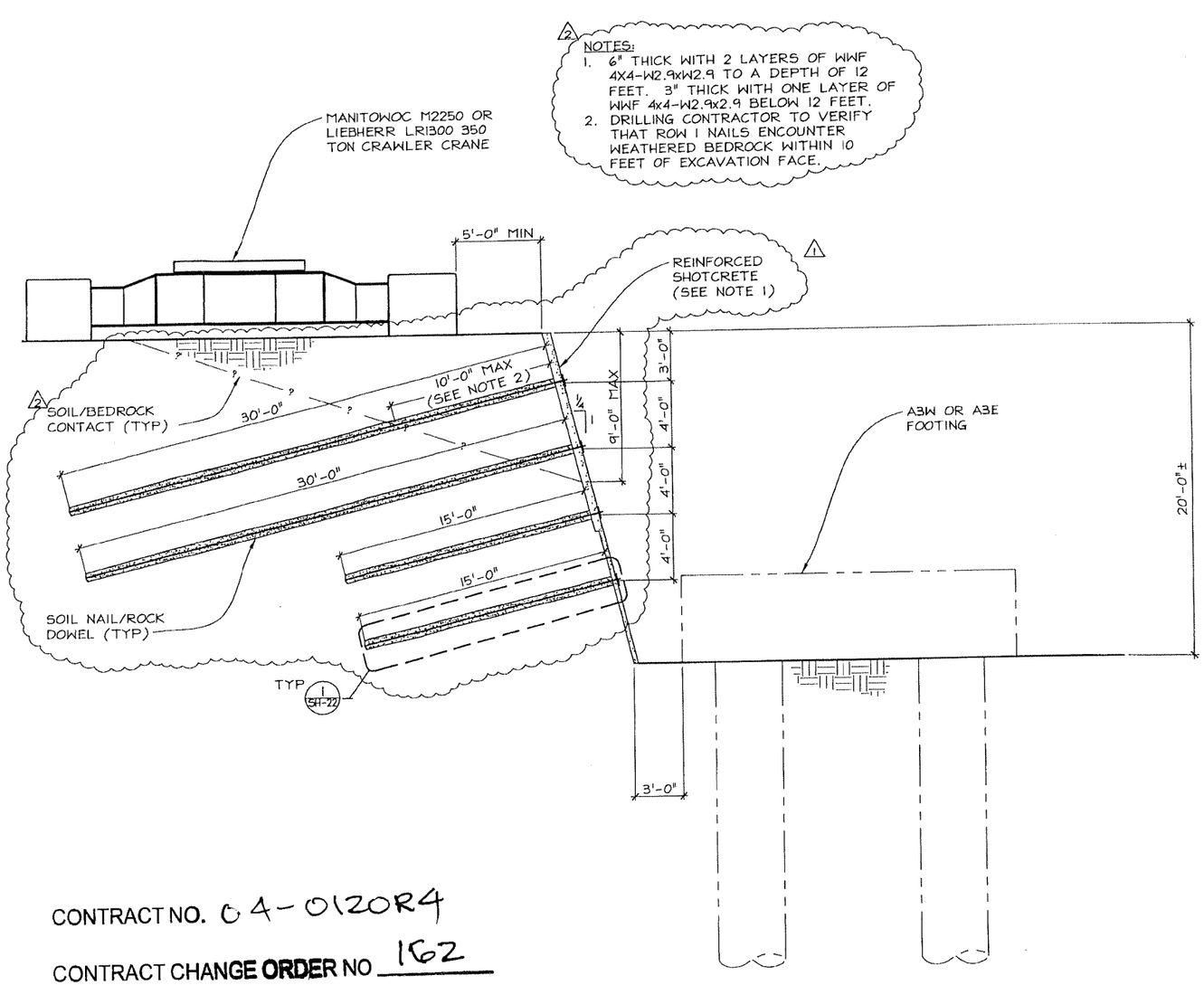

A SH-1 SECTION
SCALE: 1/4" = 1'-0"

CONTRACT NO. 04-0120R4

CONTRACT CHANGE ORDER NO 162

SHEET 3 OF 4

NO.	DATE	REVISIONS	BY	CK
2	1-8-09	MODIFY SUPPORT FOR GROUND CONDITIONS	ESL	ESL
1	8-27-08	ADD SHOTCRETE FACING	HC	ESL

OWNER: Caltrans
GRAPHIC SCALE 0 1/2" 1" 1 1/2" 2" 2 1/2" 3"
CADD FILE NAME: 8029_SH21.DWG
PLOT DATE:
CLIENT: C.C. MYERS, INC.
APPROVED
DATE

BLCE
BERTI-LINDQUIST CONSULTING ENGINEERS, INC.
920 COUNTRY CLUB DRIVE, SUITE 2A, MORAGA, CA, 94556
(925) 247-9000 FAX (925) 247-9010
DESIGNED ESL CHECKED DJB DRAWN HC

REGISTERED PROFESSIONAL ENGINEER E.S. LINDQUIST NO. 056713 EXP. 6-30-09 CIVIL STATE OF CALIFORNIA

SAN FRANCISCO OAKLAND BAY BRIDGE
EAST SPAN SEISMIC SAFETY PROJECT
EAST TIE-IN A3W & A3E EXCAVATION
KILOMETER POST 12.6
SECTION AND ELEVATION

CONTRACT | DATE AUG. 18, 2008 | JOB 8029

SHEET SH-21
OF DRAWING NO. 2 OF 3
REVISION 2 JAN. 8, 2009
SCALE 1/4" = 1'-0"

CONTRACT NO. 04-0120R4

CONTRACT CHANGE ORDER NO 162

SHEET 4 OF 4

NOTES:

GENERAL

1. ALL WORK SHALL BE PERFORMED IN ACCORDANCE WITH APPLICABLE CODES, CONTRACT DOCUMENTS, AND SAFETY REGULATIONS INCLUDING THE PROVISIONS OF CAL-OSHA AND FEDERAL OSHA.
2. BLCE WILL NOT SUPERVISE, DIRECT, CONTROL, OR HAVE AUTHORITY OVER OR BE RESPONSIBLE FOR CONTRACTORS' MEANS, METHODS, TECHNIQUES, OR THE SAFETY PRECAUTIONS AND PROGRAMS INCIDENT TO THE WORK, OR WITH ANY FAILURE OF THE CONTRACTORS TO COMPLY WITH APPLICABLE LAWS AND REGULATIONS PERTAINING TO THE PERFORMANCE OF THE WORK. UNLESS NOTED OTHERWISE, BLCE WILL NOT SUPERVISE, DIRECT, CONTROL, OR HAVE AUTHORITY OVER OR BE RESPONSIBLE FOR CONTRACTORS' SEQUENCES OR PROCEDURES OF CONSTRUCTION.
3. CONTRACTOR SHALL VERIFY ALL DIMENSIONS AND ELEVATIONS PRIOR TO ORDERING, FABRICATING OR INSTALLING ANY OF THE ITEMS SHOWN ON THESE DRAWINGS.
4. EXCAVATE AND INSTALL SOIL NAILS/ROCK DOWELS IN LIFTS. EXCAVATE NO MORE THAN 2 FEET BELOW ELEVATION OF NEXT ROW OF SOIL NAILS/ROCK DOWELS PRIOR TO INSTALLING DOWELS.
5. AFTER EACH EXCAVATION LIFT IS COMPLETED, ALL LOOSE MATERIAL SHALL BE SCALED FROM THE CUT FACE PRIOR TO INSTALLING SOIL NAILS/ROCK DOWELS.
6. ADDITIONAL SPOT DOWELS MAY BE NEEDED TO SUPPORT POTENTIALLY UNSTABLE ROCK BLOCKS EXPOSED BETWEEN PATTERNED DOWELS.
7. A REPRESENTATIVE OF BLCE SHALL MAKE A SITE VISIT WHEN THE EXCAVATION REACHES 15' DEEP IN ORDER TO CONFIRM THAT THE SOIL NAILS/ROCK DOWEL EXCAVATION SUPPORT IS SUITABLE FOR THE EXPOSED GEOTECHNICAL CONDITIONS.

MATERIALS

1. SHOTCRETE: f'c = 4000 PSI.
2. NAIL/DOWEL TENDONS: DYWIDAG THREADBAR CONFORMING TO ASTM A615, GRADE 75 OR AN APPROVED EQUIVALENT PRODUCT WITH HEX NUTS AND SPHERICAL SEAT WASHERS.
3. BEARING PLATE: FABRICATED OF ASTM A572, GRADE 50 MATERIAL OR BETTER.
4. NEAT CEMENT GROUT: 5 GALLONS OF WATER PER 94 POUND SACK OF PORTLAND CEMENT.
5. CENTRALIZERS SHALL BE MADE OF PVC.
6. WELDED WIRE REINFORCEMENT: ASTM A185. MIN LAP SPLICE = 8".
7. GEOCOMPOSITE DRAIN STRIP: MIRADRAIN 6000 OR EQUAL.

SOIL NAIL/ROCK DOWEL INSTALLATION

1. DRILL HOLE OF THE SPECIFIED LENGTH AND DIAMETER. HOLES SHALL BE CASED IF NECESSARY.
2. INSERT NAIL/DOWEL TENDON WITH CENTRALIZERS.
3. TREMIE GROUT DRILLHOLE USING A GROUT TUBE INSTALLED TO THE BOTTOM OF THE DRILLHOLE.
4. INSTALL WELDED WIRE FABRIC AND SHOTCRETE.
5. INSTALL BEARING PLATE WHILE FACING SHOTCRETE IS PLASTIC. TIGHTEN NUT TO ASURE 100% BEARING BETWEEN PLATE AND SHOTCRETE.

SOIL NAIL/ROCK DOWEL TESTING

1. CONTRACTOR SHALL PROVIDE 2 SACRIFICIAL PROOF TEST NAILS/DOWELS AT ROW 1 AND ONE SACRIFICIAL PROOF TEST NAIL AT ROW 2. PROOF TEST NAIL LOCATIONS SHALL BE PROPOSED BY THE CONTRACTOR AND APPROVED BY BLCE. TEST NAILS/DOWELS SHALL BE A MINIMUM OF 15 FEET LONG WITH ONLY THE BOTTOM 5 FEET OF THE NAIL/DOWEL ANCHORED WITH CEMENT GROUT.
2. TESTING SHALL BE PERFORMED AGAINST A TEMPORARY BEARING YOKE WHICH BEARS ON THE SHOTCRETE FACING. NO PART OF THE YOKE SHALL BEAR WITHIN 6 INCHES OF THE HEAD OF THE SOIL NAIL/ROCK DOWEL AND THE SHOTCRETE FACING SHALL BE BLOCKED OUT SO THE NAIL/DOWEL TENDON IS NOT BONDED TO FACING.
3. MONITOR AND RECORD TOTAL MOVEMENT OF THE NAIL/DOWEL HEAD DURING TESTING. MOVEMENTS OF THE NAIL/DOWEL HEAD, RELATIVE TO AN INDEPENDENT FIXED REFERENCE POINT, SHALL BE MEASURED AND RECORDED TO THE NEAREST 0.001-INCH AT EACH INCREMENT OF LOAD.
4. APPLIED TEST LOADS SHALL BE DETERMINED USING A CALIBRATED PRESSURE GAGE.
5. THE JACK AND PRESSURE GAGE SHALL HAVE A PRESSURE RANGE NOT EXCEEDING TWICE THE ANTICIPATED MAXIMUM TEST PRESSURE.
6. JACK RAM TRAVEL SHALL BE SUFFICIENT TO ALLOW THE TEST TO BE DONE WITHOUT RE-SETTING THE EQUIPMENT.
7. PROOF TESTS SHALL BE PERFORMED BY INCREMENTALLY LOADING THE PROOF TEST NAIL/DOWEL TO THE MAXIMUM TEST LOAD IN ACCORDANCE WITH THE FOLLOWING LOADING SCHEDULE:

LOAD SCHEDULE (M = 47 KIPS)	
AL (0.10M)	4.7 KIPS
0.25M	11.8 KIPS
0.50M	23.5 KIPS
0.75M	35.3 KIPS
1.00M	47.0 KIPS - MAX TEST LOAD
AL (0.10M)	4.7 KIPS

9. EACH INCREMENT OF LOAD SHALL BE APPLIED IN LESS THAN ONE MINUTE AND BE HELD FOR AT LEAST ONE MINUTE BUT NOT MORE THAN 2 MINUTES, EXCEPT THAT THE MAXIMUM TEST LOAD SHALL BE HELD FOR 10 MINUTES. DURING THE 10 MINUTE LOAD HOLD, THE MOVEMENT OF THE HEAD OF THE NAIL/DOWEL SHALL BE MEASURED AT 1, 2, 3, 4, 5, 6, AND 10 MINUTES. IF CREEP MOVEMENT MEASURED BETWEEN ONE MINUTE AND 10 MINUTES EXCEEDS 0.04 INCHES, THE MAXIMUM TEST LOAD SHALL BE MAINTAINED AN ADDITIONAL 50 MINUTES AND MOVEMENTS SHALL BE RECORDED AT 15, 20, 25, 30, 45, AND 60 MINUTES.
10. ACCEPTANCE CRITERIA:
    A. TOTAL CREEP MOVEMENT BETWEEN ONE AND 10 MINUTES IS LESS THAN 0.04 INCHES OR LESS THAN 0.08 INCHES BETWEEN 6 AND 60 MINUTES AND THE CREEP RATE IS LINEAR OR DECREASING THROUGHOUT THE CREEP TEST LOAD HOLD PERIOD.
    B. A PULLOUT FAILURE DOES NOT OCCUR AT THE MAXIMUM TEST LOAD.

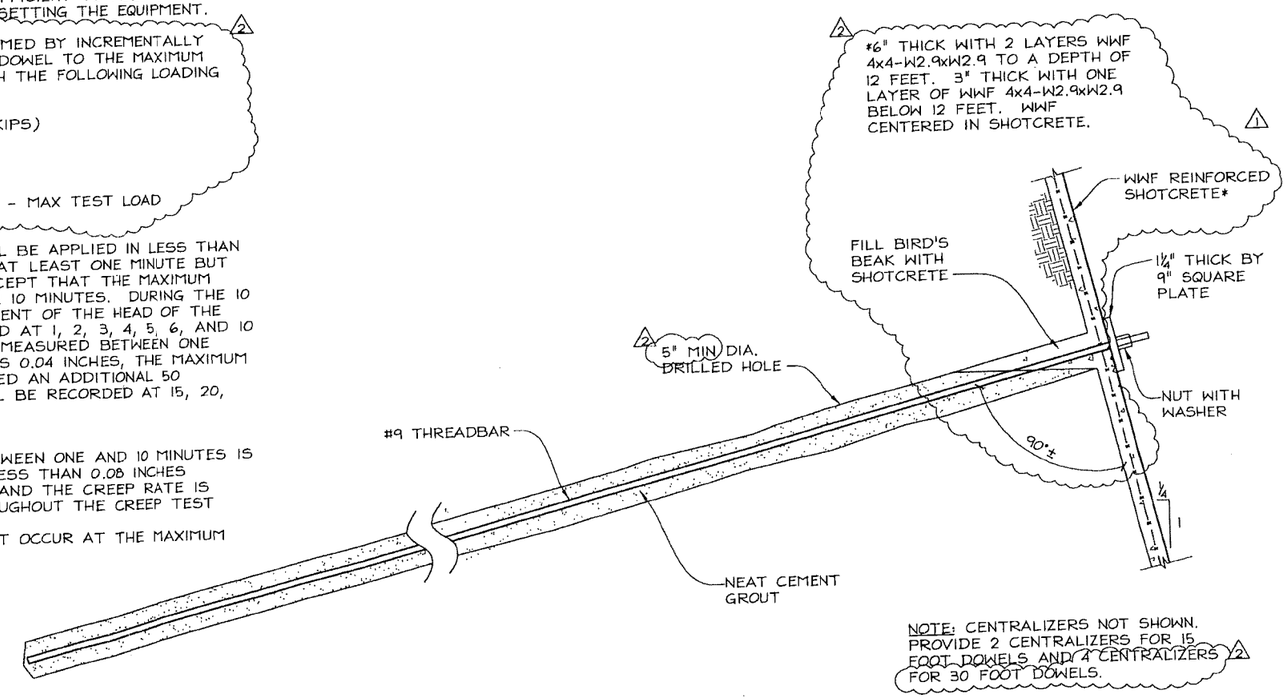

1 SOIL NAIL/ROCK DOWEL DETAIL
5H-21 SCALE: 1" = 1'-0"

NO.	DATE	REVISIONS	BY	CK
2	1-8-09	MODIFY SUPPORT FOR GROUND CONDITIONS	ESL	ESL
1	8-27-08	ADD SHOTCRETE FACING	HC	ESL

OWNER: Caltrans
GRAPHIC SCALE: 0 ½" 1" 1½" 2" 2½" 3"
CADD FILE NAME: 8029_SH22.DWG
PLOT DATE:
CLIENT: C.C. MYERS, INC.
APPROVED: DATE:

BLCE
BERTI-LINDQUIST CONSULTING ENGINEERS, INC.
920 COUNTRY CLUB DRIVE, SUITE 2A, MORAGA CA, 94556
(925) 247-9000 FAX (925) 247-9010
DESIGNED ESL CHECKED DJB DRAWN HC

REGISTERED PROFESSIONAL ENGINEER E.S. LINDQUIST NO. 056713 EXP. 6-30-09 CIVIL STATE OF CALIFORNIA

SAN FRANCISCO OAKLAND BAY BRIDGE
EAST SPAN SEISMIC SAFETY PROJECT
EAST TIE-IN A3W & A3E EXCAVATION
KILOMETER POST 12.6
DETAIL AND NOTES

CONTRACT | DATE AUG. 18, 2008 | JOB 8029

SHEET SH-22 OF
DRAWING NO. 3 OF 3
REVISION 2 JAN. 8, 2009
SCALE 1" = 1'-0"

STATE OF CALIFORNIA - DEPARTMENT OF TRANSPORTATION

CONTRACT CHANGE ORDER MEMORANDUM

TO: MIKE FORNER / DEANNA VILCHECK	FILE: E.A. 04 - 0120R4
FROM: BILL CASEY	CO-RTE-PM SF-80-12.6/13.2
	FED. NO. ACBRIM-080-1(097)N
CCO#: **162** SUPPLEMENT#: **0** Category Code: **CMTC**	CONTINGENCY BALANCE (incl. this change) **$70,020,110.05**
COST: **$268,235.00** INCREASE ☑ DECREASE ☐	HEADQUARTERS APPROVAL REQUIRED? ☑ YES ☐ NO
SUPPLEMENTAL FUNDS PROVIDED: **$0.00**	IS THIS REQUEST IN ACCORDANCE WITH ENVIRONMENTAL DOCUMENTS? ☑ YES ☐ NO
CCO DESCRIPTION: Bent A3 Shoring	**PROJECT DESCRIPTION:** CONSTRUCT ROUTE 80 TEMP BYPASS STRUCTURE

Original Contract Time:	Time Adj. This Change:	Previously Approved CCO Time Adjustments:	Percentage Time Adjusted: (including this change)	Total # of Unreconciled Deferred Time CCO(s): (including this change)
475 Day(s)	**0** Day(s)	**1195** Day(s)	**252** %	**7**

THIS CHANGE ORDER PROVIDES FOR:

This change compensates the contractor for all additional costs involved in engineering, providing, installing, and maintaining temporary shoring at Skid Bent Footing A3, in accordance with Sheets 2, 3, and 4 of this contract change order.

This contract calls for the construction of a temporary detour for both eastbound and westbound I-80 traffic that allows for the tie in of the east span of the new San Francisco Oakland Bay Bridge (SFOBB) to Yerba Buena Island. The detour consist of three main structures, the East Tie-In (ETI) to the existing bridge, the West Tie -In to the island, and the Viaduct structure between the two tie ins.

The Department's December 14, 2006 Strategy memo called for the ETI structure to be constructed by rolling out the existing structure and rolling in the new detour structure in lieu of the contractor's plan to incorporate the existing structure as part of the new detour. The roll out/roll in design requires the construction of a steel skid bent structure that supports the ETI structure as it is rolled into place and the existing structure as it is rolled out.

Skid Bent foundations (SBF) are being installed under contract change order (CCO) 90. CCO 90 was approved on April 14, 2008, with the design anticipating a bench being excavated for SBF's A3W and A3E at a level 6.12 meters (20 feet) in elevation below the next work area to the north. The construction of Skid Bent A3 is currently on the project's critical path and as such cannot be delayed without affecting the overall project schedule. Due to the existence of various obstructions including newly constructed bents, staging areas, and access roads in the area north of Bent A3, the A3 excavation cannot be sloped back as originally planned until this area is cleared out, and this would cause a delay to the A3 construction. This CCO provides for a revised staging plan design that enlarges the available flat work area on the above level by 35 feet laterally by steepening the slope at the north side of the A3 excavation from 2 vertical to 1 horizontal (2:1) to 1:4. The steeper slope will require temporary shoring (ground stabilization) to support the heavy crane loads anticipated. The proposed temporary shoring provided under this CCO can proceed now, and allow A3 construction to proceed without a delay, thus mitigating the possible delay.

The Contractor's engineer (Berti-Lindquist Consulting Engineers) has prepared drawings to provide for a temporary wall to shore the slope. The construction of the temporary wall includes a 29 lineal meter section of soil nail / rock dowel wall. Excavation costs associated with the construction of the wall are included.

This work will be performed as an Adjustment of Compensation at Agreed Lump Sum for the amount of $268,235.00. The agreed lump sum will be funded through the contract's contingency funds. A cost analysis is in the project files.

It is anticipated that the identified costs excluded from Change Order No. 90 shall result in a minimum of 7 to 8 additional change orders being issued as the design is completed, and the costs are quantified and agreed to. CCOs No. 45, 149, 112, 123, and 155 have been executed to date, and CCOs 180 and 162 are pending. These individual change orders have been assigned as the costs are being quantified and agreed to in order to facilitate the tracking of the excluded items.

No adjustment of contract time is warranted as the work will not affect the controlling operation.

This change has been concurred by Alec Melkonians - Asst. Project Manager and Hong Wong - Project Engineer.

Maintenance concurrence is not required, as the work does not affect any permanent roadway features.

ADA Notice: For individuals with sensory disabilities, this document is available in alternate formats. For information call: (916) 654-6410 or TDD (916) 654-3880 or write Records and Forms Management, 1120 N Street, MS-89, Sacramento, CA 95814.

CONCURRED BY:			
Construction Engineer:	Bill Casey, Resident Engineer	Date 3-6-09	
Bridge Engineer:		Date	
Project Engineer:	Hong Wong, PE	Date	3/4/09
Project Manager:	Alec Melkonians	Date	3/4/09
FHWA Rep.:		Date	
Environmental:		Date	
Other (specify):		Date	
Other (specify):		Date	
District Prior Approval By:		Date	
HQ (Issue Approve) By:	Bob Molera, HQ CCO Engineer	Date	
Resident Engineer's Signature:		Date 3-6-09	

ESTIMATE OF COST

	THIS REQUEST	TOTAL TO DATE
ITEMS	$0.00	$0.00
FORCE ACCOUNT	$0.00	$0.00
AGREED PRICE	$0.00	$0.00
ADJUSTMENT	$268,235.00	$268,235.00
TOTAL	$268,235.00	$268,235.00

FEDERAL PARTICIPATION

☐ PARTICIPATING ☐ PARTICIPATING IN PART ☑ NONE
☐ NON-PARTICIPATING (MAINTENANCE) ☐ NON-PARTICIPATING

FEDERAL SEGREGATION (if more than one Funding Source or P.I.P. type)
☐ CCO FUNDED PER CONTRACT ☐ CCO FUNDED AS FOLLOWS

FEDERAL FUNDING SOURCE	PERCENT

ADA Notice: For individuals with sensory disabilities, this document is available in alternate formats. For information call: (916) 654-6410 or TDD (916) 654-3880 or write Records and Forms Management, 1120 N Street, MS-89, Sacramento, CA 95814.

STATE OF CALIFORNIA - DEPARTMENT OF TRANSPORTATION

CONTRACT CHANGE ORDER

Change Requested by: Engineer

CCO 163	Suppl. No. 0	Contract No. 04 - 0120R4	Road SF-80-12.6/13.2	FED. AID LOC.: ACBRIM-080-1(097)N

To: CC MYERS INC

You are directed to make the following changes from the plans and specifications or do the following described work not included in the plans and specifications for this contract. ***NOTE: This change order is not effective until approved by the Engineer.***

Description of work to be done, estimate of quantities and prices to be paid. (Segregate between additional work at contract price, agreed price and force account.) Unless otherwise stated, rates for rental of equipment cover only such time as equipment is actually used and no allowance will be made for idle time. This last percentage shown is the net accumulated increase or decrease from the original quantity in the Engineer's Estimate.

Extra Work at Lump Sum:

Construct the steel decking in accordance with the revised grades as established by the Engineer.

Work includes furnishing and installing of additional decking hanger assemblies, bolts and fasteners, and angle iron as required; and reusing the previously installed steel decking to complete the work per all applicable plans and specifications for the Viaduct Span 49.

For this work, the Contractor will be compensated a lump sum of $83,202.00. This sum constitutes full compensation for all costs, including markups, by reason of this change.

Total Cost of Extra Work at Lump Sum $83,202.00

Estimated Cost: Increase ☑ Decrease ☐ $83,202.00

By reason of this order the time of completion will be adjusted as follows: 0 days

Submitted by

Signature	Resident Engineer BILL CASEY	Date 3-16-09

Approval Recommended by

Signature Deanna Vilcheck	Area Construction Manager DEANNA VILCHECK	Date 3/16/09

Engineer Approval by

Signature Deanna Vilcheck	Area Construction Manager DEANNA VILCHECK	Date 5/13/09

We the undersigned contractor, have given careful consideration to the change proposed and agree, if this proposal is approved, that we will provide all equipment, furnish the materials, except as may otherwise be noted above, and perform all services necessary for the work above specified, and will accept as full payment therefor the prices shown above.

NOTE: If you, the contractor, do not sign acceptance of this order, your attention is directed to the requirements of the specifications as to proceeding with the ordered work and filing a written protest within the time therein specified.

Contractor Acceptance by

Signature	(Print name and title) STEVE FRANCIS, CHIEF ESTIMATOR	Date 5.11.09

STATE OF CALIFORNIA - DEPARTMENT OF TRANSPORTATION

CONTRACT CHANGE ORDER MEMORANDUM

TO: MIKE FORNER / DEANNA VILCHECK	FILE: E.A. 04 - 0120R4
	CO-RTE-PM SF-80-12.6/13.2
FROM: BILL CASEY	FED. NO. ACBRIM-080-1(097)N
CCO#: 163 SUPPLEMENT#: 0 Category Code: CHPA	CONTINGENCY BALANCE (incl. this change) $67,989,958.05
COST: $83,202.00 INCREASE ☑ DECREASE ☐	HEADQUARTERS APPROVAL REQUIRED? ☐ YES ☑ NO
SUPPLEMENTAL FUNDS PROVIDED: $0.00	IS THIS REQUEST IN ACCORDANCE WITH ENVIRONMENTAL DOCUMENTS? ☑ YES ☐ NO
CCO DESCRIPTION: VIA Span 49 Deck Grade Conflict	PROJECT DESCRIPTION: CONSTRUCT ROUTE 80 TEMP BYPASS STRUCTURE

Original Contract Time:	Time Adj. This Change:	Previously Approved CCO Time Adjustments:	Percentage Time Adjusted: (including this change)	Total # of Unreconciled Deferred Time CCO(s): (including this change)
475 Day(s)	0 Day(s)	1195 Day(s)	252 %	7

THIS CHANGE ORDER PROVIDES FOR:

the revised reconstruction of the metal decking for the Viaduct lower deck Span 49.

This contract provides for the construction of a temporary detour for both eastbound and westbound I-80 traffic that allows for the tie in of the east span of the new San Francisco Oakland Bay Bridge (SFOBB) to Yerba Buena Island. The detour will allow for the construction of the permanent Yerba Buena Island Transition Structure (YBITS) that connects the signature SAS structure to Yerba Buena Island.

As part of that work, the plans call for the construction of a double deck viaduct structure, consisting of a concrete slab being supported by metal decking, which in turn is supported by a steel truss and floor beam system. The metal deck acts as shoring and formwork for the construction of the reinforced concrete viaduct roadway. Span 49 deck is on a horizontal curve, with a length of 84.337 meters on the south side and 71.347 meters on the north side. The slope of the deck varies, with the superelevation changing as the deck turns this curve.

After installation of the floor beams was completed, the Department provided survey staking for the metal decking construction. Once the survey was placed, construction of the steel decking proceeded. Approximately 95% of the steel decking had been constructed when it was recognized that the Department survey had been placed in error. Construction was then suspended, the grades were reset to the correct elevations. The system to support the decking allows for the reutilization of metal decking sections, but the suspending straps and angle iron had to be replaced. This change order compensates the contractor for the additional costs to reconstruct the decking.

Compensation shall be paid as extra work at an agreed lump sum of $83,202.00 which shall be financed from the contract's contingency funds. A force account cost analysis is on file.

There is no adjustment of contract time specified in this change as it does not affect the controlling operation.

This change was concurred by Alec Melkonians - Asst. Project Manager and Hong Wong - Project Engineer.

Maintenance concurrence for this change order is not required, as the viaduct is a temporary structure and does not affect any permanent roadway.

ADA Notice: For individuals with sensory disabilities, this document is available in alternate formats. For information call: (916) 654-6410 or TDD (916) 654-3880 or write Records and Forms Management, 1120 N Street, MS-89, Sacramento, CA 95814.

CONCURRED BY:		
Construction Engineer:	Bill Casey	Date 3/16/09
Bridge Engineer:	Bill Casey	Date 3/16/09
Project Engineer:	Hong Wong, PE	Date 3/11/09
Project Manager:	Alec Melkonians	Date 3/16/09
FHWA Rep.:		Date
Environmental:		Date
Other (specify):		Date
Other (specify):		Date
District Prior Approval By:		Date
HQ (Issue Approve) By:		Date
Resident Engineer's Signature:		Date

3-16-09

ESTIMATE OF COST

	THIS REQUEST	TOTAL TO DATE
ITEMS	$0.00	$0.00
FORCE ACCOUNT	$0.00	$0.00
AGREED PRICE	$83,202.00	$83,202.00
ADJUSTMENT	$0.00	$0.00
TOTAL	$83,202.00	$83,202.00

FEDERAL PARTICIPATION

☐ PARTICIPATING ☐ PARTICIPATING IN PART ☑ NONE
☐ NON-PARTICIPATING (MAINTENANCE) ☐ NON-PARTICIPATING

FEDERAL SEGREGATION (if more than one Funding Source or P.I.P. type)
☐ CCO FUNDED PER CONTRACT ☐ CCO FUNDED AS FOLLOWS

FEDERAL FUNDING SOURCE	PERCENT

ADA Notice: For individuals with sensory disabilities, this document is available in alternate formats. For information call: (916) 654-6410 or TDD (916) 654-3880 or write Records and Forms Management, 1120 N Street, MS-89, Sacramento, CA 95814.

CONTRACT CHANGE ORDER

Change Requested by: Engineer

CCO 164	Suppl. No. 0	Contract No. 04 - 0120R4	Road SF-80-12.6/13.2	FED. AID LOC.: ACBRIM-080-1(097)N

To: **CC MYERS INC**

You are directed to make the following changes from the plans and specifications or do the following described work not included in the plans and specifications for this contract. ***NOTE: This change order is not effective until approved by the Engineer.***

Description of work to be done, estimate of quantities and prices to be paid. (Segregate between additional work at contract price, agreed price and force account.) Unless otherwise stated, rates for rental of equipment cover only such time as equipment is actually used and no allowance will be made for idle time. This last percentage shown is the net accumulated increase or decrease from the original quantity in the Engineer's Estimate.

Extra Work at Lump Sum:

Design, provide, install, and remove temporary trestle system, including survey layout, earthwork, pile driving, steel members, deck, and handrails as required to construct a crane runway in accordance with sheets 2 through 7 of this change order and BCDC Permit 8-01 Amendment 22 for the Crane Runway Platform. The system shall provide access for cranes as required to construct the skid bent and truss system for the East Tie In (ETI).

This change order price includes full compensation for removal of and any required legal disposal of materials used during the work.

For this extra work, the Contractor will be compensated $2,770,000.00. This lump sum constitutes full compensation, including markups, for furnishing all labor, material, tools, equipment, and incidentals for doing the work involved in this change.

Prior to driving piles, a preliminary 500-meter radius safety zone for marine mammals (harbor seals, California sea lions, harbor porpoises and gray whales) will be established around the pile driving site. The Department of Transportation will have National Marine Fisheries Service approved marine mammal observers on site to establish and conduct monitoring of the safety zone. Once pile-driving begins, the safety zone radius for marine mammals will then be enlarged or reduced by the Department of Transportation, depending on monitored sound pressure levels.

If one or more marine mammals are observed within the safety zone, pile-driving shall be delayed until the mammals all move out of the area. If a marine mammal is seen above water and then dives below within the safety zone, the contractor shall wait 15 minutes, and if no marine mammals are observed within the safety zone, at that time it will be assumed that the animal has moved beyond the safety zone. If a marine mammal enters the safety zone after the driving of a pile has commenced, the driving of that pile can proceed until it has reached the prescribed tip elevation.

If pile driving of the current pile ceases for 30 minutes or more and a marine mammal is sighted within the designated safety zone prior to resumption of pile driving, the observer must notify the Engineer immediately and direct the Contractor to follow the mitigation requirements as outlined in the above paragraph.

If the pile driving work is delayed due to the marine mammal mitigation requirements, in addition to the agreed lump sum, the actual delay cost will be paid for as extra work. The equipment that is involved in such a delay will be paid for in accordance with Standard Specification Section 8-1.09 RIGHT OF WAY DELAYS and shall be compensated under a separate change order.

Contractor shall take measures, including working overtime and committing additional resources as required, to complete pile driving before December 1, 2008, and complete all work to allow trestle to be usable in a timely fashion as required to construct the skid bent and truss system for the ETI.

All work associated with the implementation and maintenance of the Contractor's Storm Water Pollution Prevention Plan and erosion control, including concrete washouts, shall be paid by the Department separately from this change order.

Flagging costs associated with this work shall be paid under change Order No. 1 with these costs being paid at 50% by the Department. The remaining flagging costs are considered to be included in the lump sum payment made under this change order.

CONTRACT CHANGE ORDER

Change Requested by: Engineer

CCO 164	Suppl. No. 0	Contract No. 04 - 0120R4	Road SF-80-12.6/13.2	FED. AID LOC.: ACBRIM-080-1(097)N

There will be no adjustment in contract time for this change order.

Total Cost of Extra Work at Lump Sum $2,770,000.00

Estimated Cost: Increase ☑ Decrease ☐ **$2,770,000.00**

By reason of this order the time of completion will be adjusted as follows: 0 days

Submitted by

Signature	Resident Engineer BILL CASEY	Date 11-18-08

Approval Recommended by

Signature	SFOBB Construction Manager MIKE FORNER	Date 11/18/08

Engineer Approval by

Signature	SFOBB Construction Manager MIKE FORNER	Date 12-16-08

We the undersigned contractor, have given careful consideration to the change proposed and agree, if this proposal is approved, that we will provide all equipment, furnish the materials, except as may otherwise be noted above, and perform all services necessary for the work above specified, and will accept as full payment therefor the prices shown above.

NOTE: If you, the contractor, do not sign acceptance of this order, your attention is directed to the requirements of the specifications as to proceeding with the ordered work and filing a written protest within the time therein specified.

Contractor Acceptance by

Signature	(Print name and title) DANIEL E. HIMICK, PRESIDENT	Date 12/01/08

TBS

CCM #215

TBS CRANE RUNWAY
CONSTRUCTION PLANS REV. 1

BRIDGE NO. 34-0006

DESIGNED BY: FORREST MEGARGEL

INDEX TO FALSEWORK PLANS

1 COVER SHEET
2 PLAN LAYOUT
3 DETAILS
4 DETAILS 2
5 DETAILS 3
6 MATERIALS

INDEX TO STANDARD DRAWINGS

LOCATION MAP

NOTE:
PLEASE RETURN 4 STAMPED ORIGINAL COPIES TO CC MYERS UPON APPROVAL

CONTRACT NO. 04-0120R4

CONTRACT CHANGE ORDER NO 164

SHEET 3 OF 8

DISTRIBUTION		
1. OWNER/CALTRANS	7 COPIES	
2. PROJECT MANAGER	1 COPY	
3. SAFETY OFFICER	1 COPY	
4. JOB SUPERINTENDENT	3 COPIES BEFORE APROVAL 3 COPIES OF APPROVED SET	
5. FIELD ENGINEER	2 COPIES BEFORE APROVAL 2 COPIES OF APPROVED SET	

CC MYERS INC.
3286 Fitzgerald Road, Rancho Cordova, CA 95742
916-635-9370 Fax 916-635-1527
Email: fmegargel @ ccmyers.com

REGISTERED PROFESSIONAL ENGINEER FORREST G. MEGARGEL C66641 Exp. 6/30/10 CIVIL STATE OF CALIFORNIA

REV.	DATE	DESCRIPTION
1	9/24/08	COMPLETLEY REDESIGNED

DESIGN BY: FGM
DRAWN BY: FGM
SCALE: —

CC MYERS INC.
3286 Fitzgerald Road, Rancho Cordova, CA 95742
P.O. Box 2948, Rancho Cordova, CA 95741
916-635-9370 Fax 916-635-1527

COVER SHEET
TBS CRANE RUNWAY
PROJECT: TBS
CCM JOB#: CCM #215 FILE: TBS crane runway (current).dwg

SHEET NUMBER: 1 OF 6 SHEETS

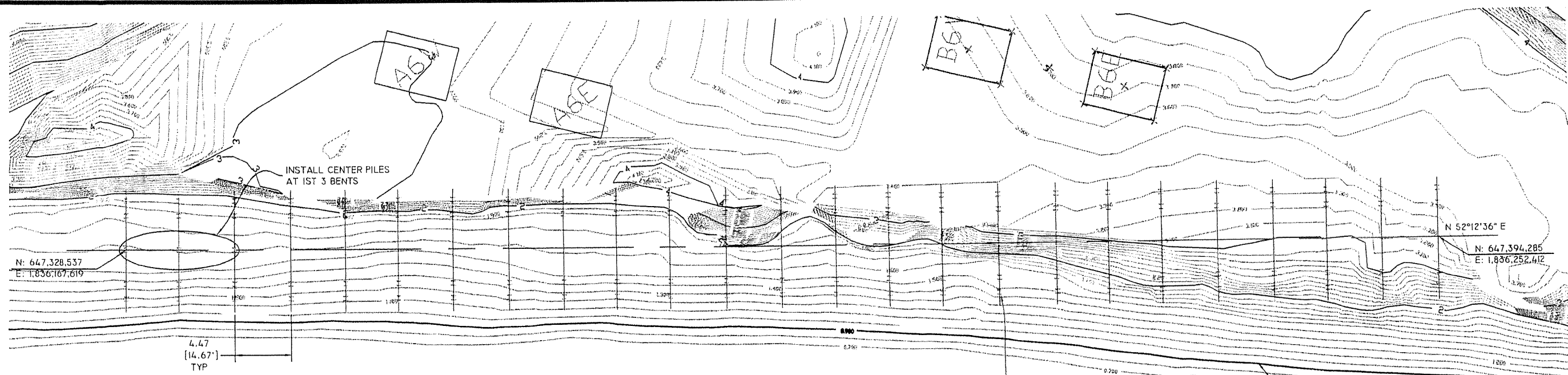

PILE LAYOUT
(PLAN)

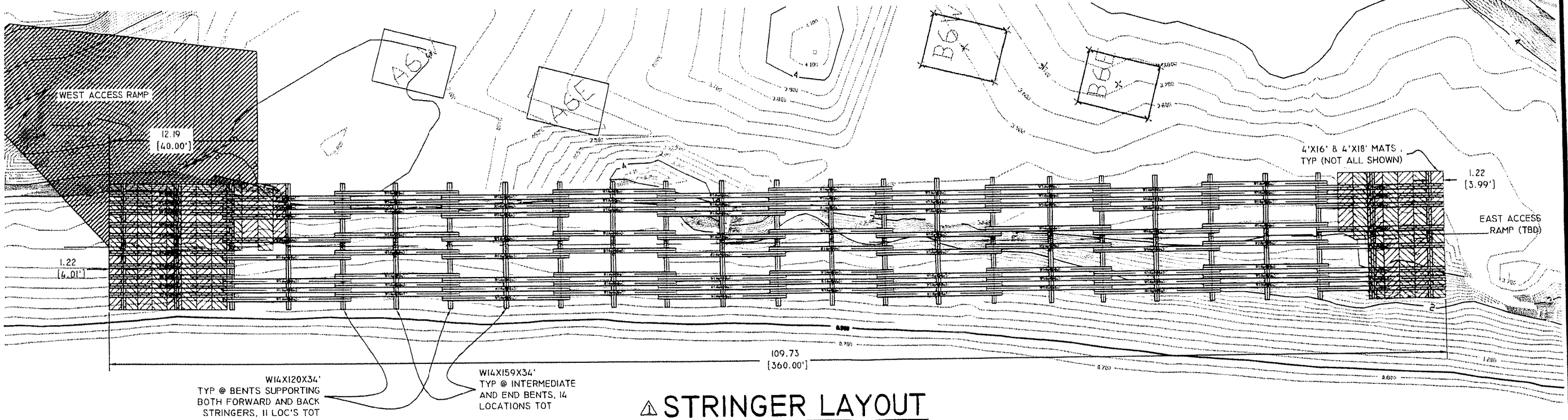

STRINGER LAYOUT
(PLAN)

GENERAL NOTES:

1. TRESTLE IS DESIGNED FOR LIEBEHRR LRI300 OR MANITOWOC 2250 CRANE WITH A MAXIMUM PICK OF 66 KIPS AT 105' RADIUS.
2. CRANES MUST REMAIN CENTERED ON TRESTLE AND CRANE TRACKS MUST REMAIN PARALLEL WITH TRESTLE CL DURING ALL OPERATIONS OTHER THAN ACCESS ONTO AND OFF OF TRESTLE.
3. PILES MUST BE INSTALLED PLUMB WITHIN 1/4"/4FT.
4. ANY PILES MORE THAN 3" OUT OF TRANSVERSE (L/R) ALIGNMENT OR LONGITUDINAL ALIGMENT MUST BE REMOVED AND REDRIVEN OR A SECOND PILE MUST BE INSTALLED WITHIN TOLERANCE ADJACENT TO THOSE OUT OF ALIGNMENT.
5. PILE STEEL IS 50KSI MIN, ALL OTHER STEEL IS A36.
6. ALL WELDING WILL BE WITH E70XX OR E71T-X ELECTRODES AND PERFORMED BY AN AWS CERTIFIED WELDER. WELD STRENGTH IS ASSUMED TO BE 1000 LB/IN PER 1/8" FILLET.
7. THE ENGINEER MUST BE NOTIFIED AND APPROVE THE USE OF ANY OTHER LARGE CONSTRUCTION EQUIPMENT (TRUCKS, CONC PUMP, ETC) ON THE TRESTLE.

CONTRACT NO. 04-0120R4

CONTRACT CHANGE ORDER NO 164

SHEET 4 OF 8

REGISTERED PROFESSIONAL ENGINEER
FORREST G. MEGARGEL
C66641
Exp. 6/30/10
CIVIL
STATE OF CALIFORNIA

DESIGN BY: FGM	REV.	DATE	DESCRIPTION
DRAWN BY: FGM	1	9/24/08	PILES & BEAM LAYOUTS REVISED
SCALE: —			

CC MYERS INC.
3286 Fitzgerald Road, Rancho Cordova, CA 95742
P.O. Box 2948, Rancho Cordova, CA 95741
916-635-9370 Fax 916-635-1527

PLAN LAYOUT

TBS CRANE RUNWAY

PROJECT: TBS

CCM JOB#: CCM #215

FILE: TBS crane runway (current).dwg

SHEET NUMBER: 2 OF 6 SHEETS

CONTRACT NO. 04-0120R4

CONTRACT CHANGE ORDER NO 164

SHEET 5 OF 8

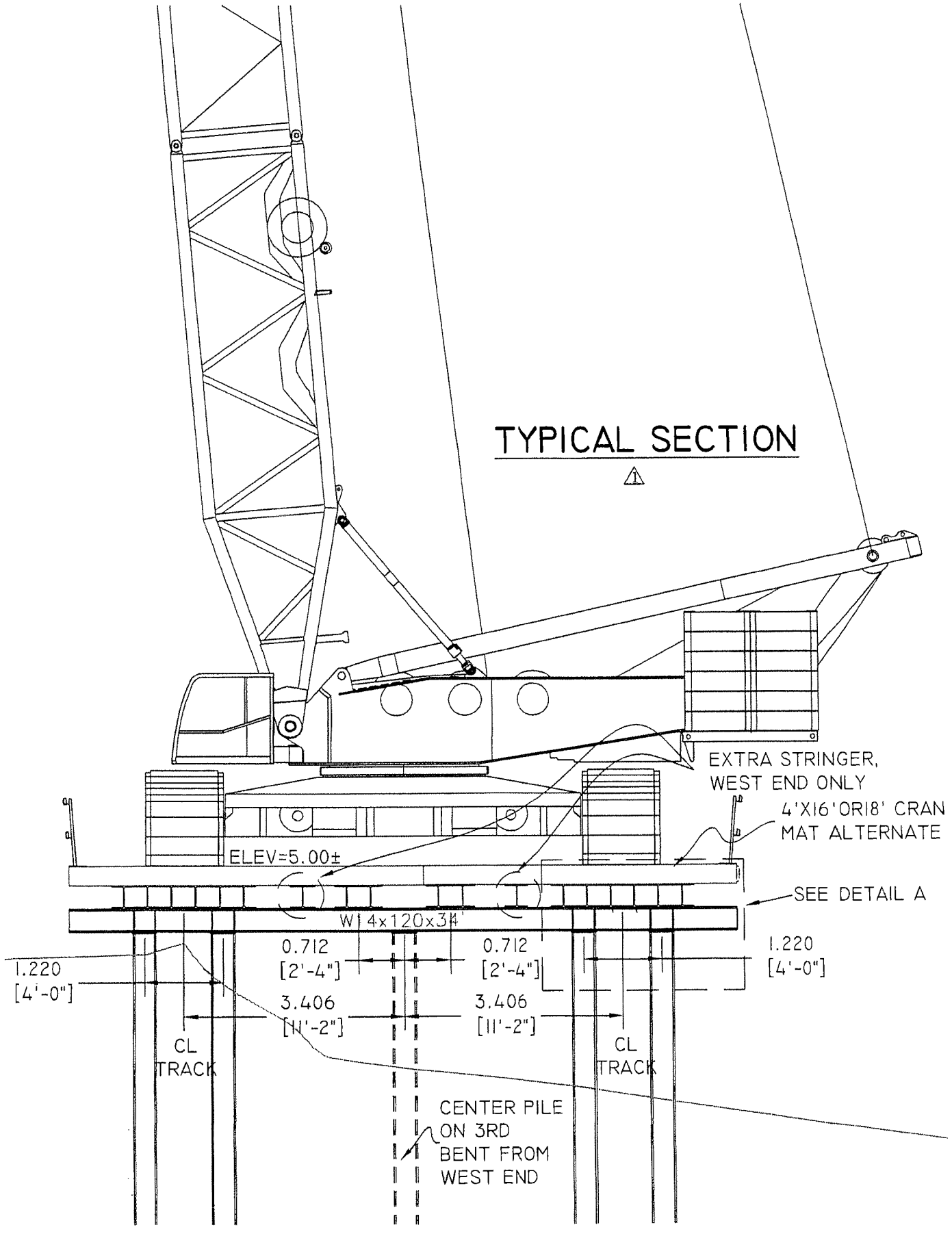

TYPICAL SECTION

1

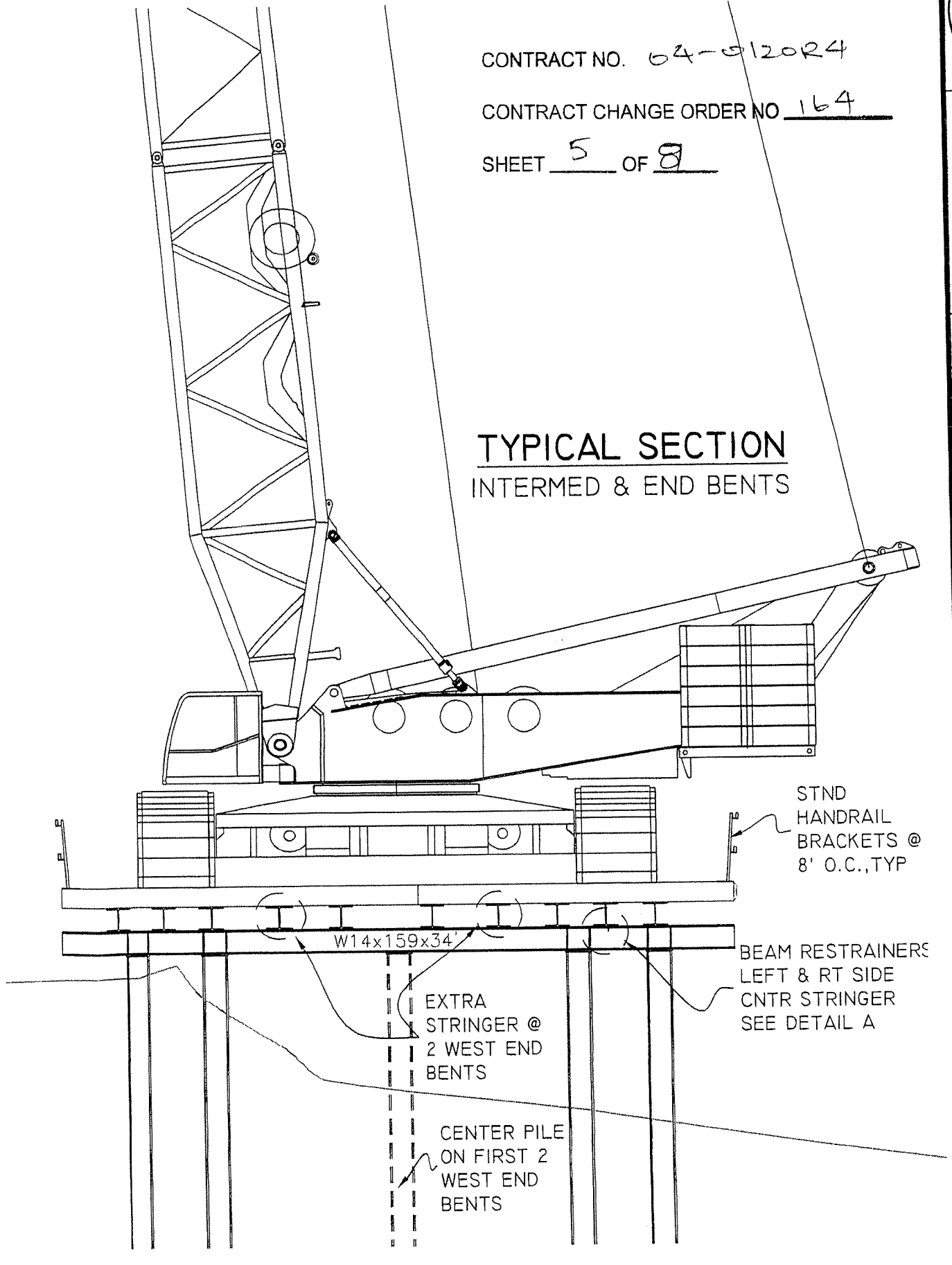

TYPICAL SECTION

INTERMED & END BENTS

DESIGN BY: FGM	REV.	DATE	DESCRIPTION
DRAWN BY: FGM	1	9/24/08	PILES, CAPS & STRINGERS REVISED
SCALE: —			

REGISTERED PROFESSIONAL ENGINEER FORREST G. MEGARGEL C06641 Exp. 6/30/10 CIVIL STATE OF CALIFORNIA

CC MYERS INC.
3286 Fitzgerald Road, Rancho Cordova, CA 95742
P.O. Box 2948, Rancho Cordova, CA 95741
916-635-9370 Fax 916-635-1527

DETAILS 1

TBS CRANE RUNWAY

PROJECT: TBS

CCM JOB#: CCM #215

FILE: TBS crane runway (current).dwg

SHEET NUMBER: 3 OF 6 SHEETS

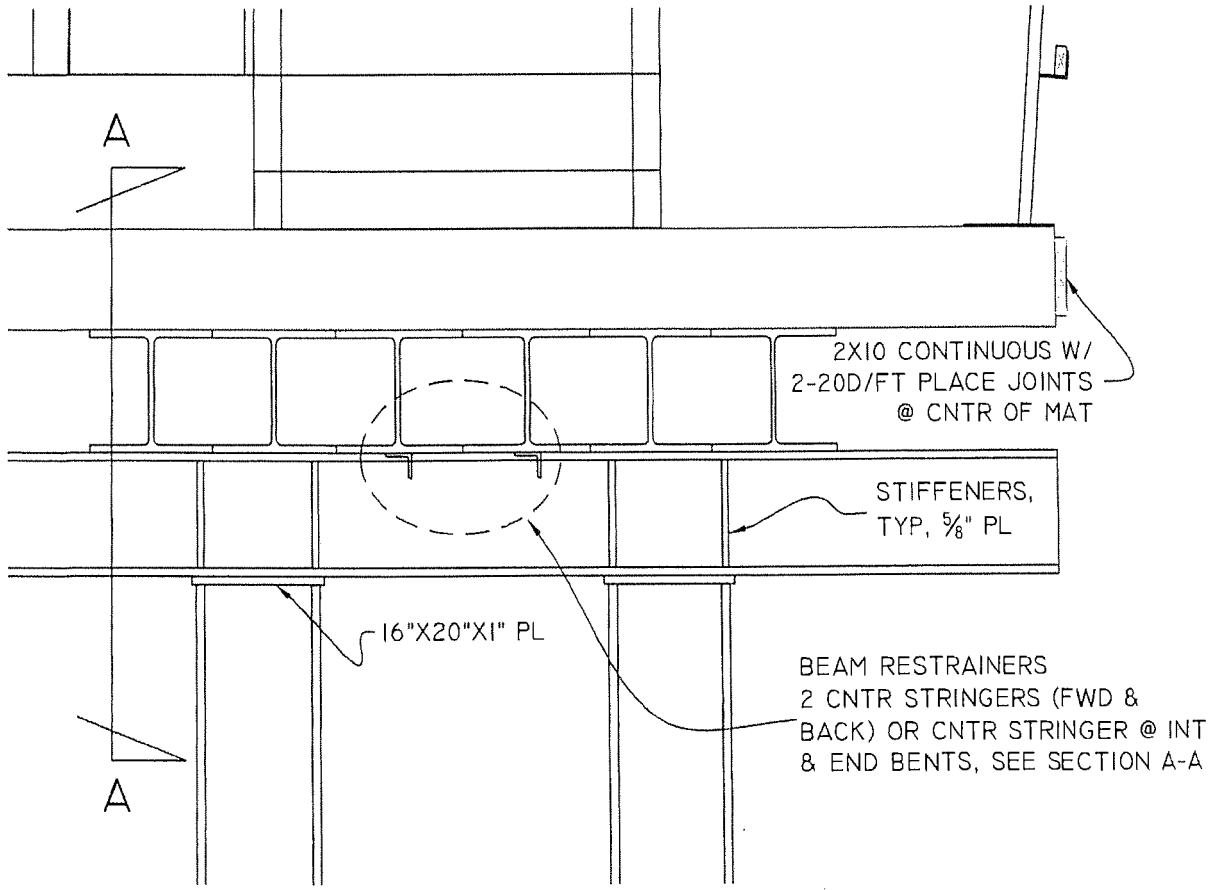

DETAIL A △1

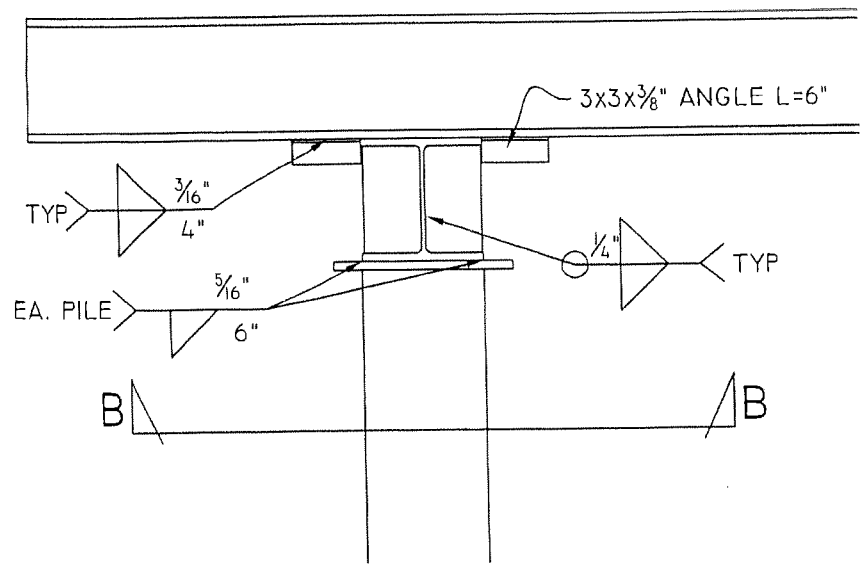

△1 SECTION A-A

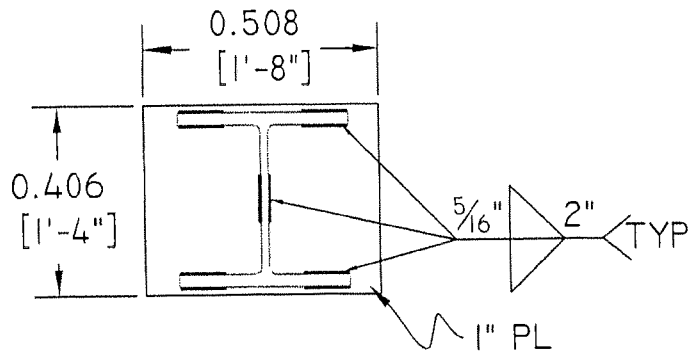

△1 SECTION B-B

CONTRACT NO. 64-0120R4

CONTRACT CHANGE ORDER NO 164

SHEET 6 OF 8

REGISTERED PROFESSIONAL ENGINEER
FORREST G. MEGARGEL
Exp. 6/30/10
CIVIL
STATE OF CALIFORNIA

DESIGN BY: FGM	REV.	DATE	DESCRIPTION
DRAWN BY: FGM	1	9/24/08	REVISED CONNECTION DETAILS
SCALE: —			

CC MYERS INC.
3286 Fitzgerald Road, Rancho Cordova, CA 95742
P.O. Box 2948, Rancho Cordova, CA 95741
916-635-9370 Fax 916-635-1527

DETAILS 2

TBS CRANE RUNWAY

PROJECT: TBS

CCM JOB#: CCM #215 FILE: TBS crane runway (current).dwg

SHEET NUMBER: 4 OF 6 SHEETS

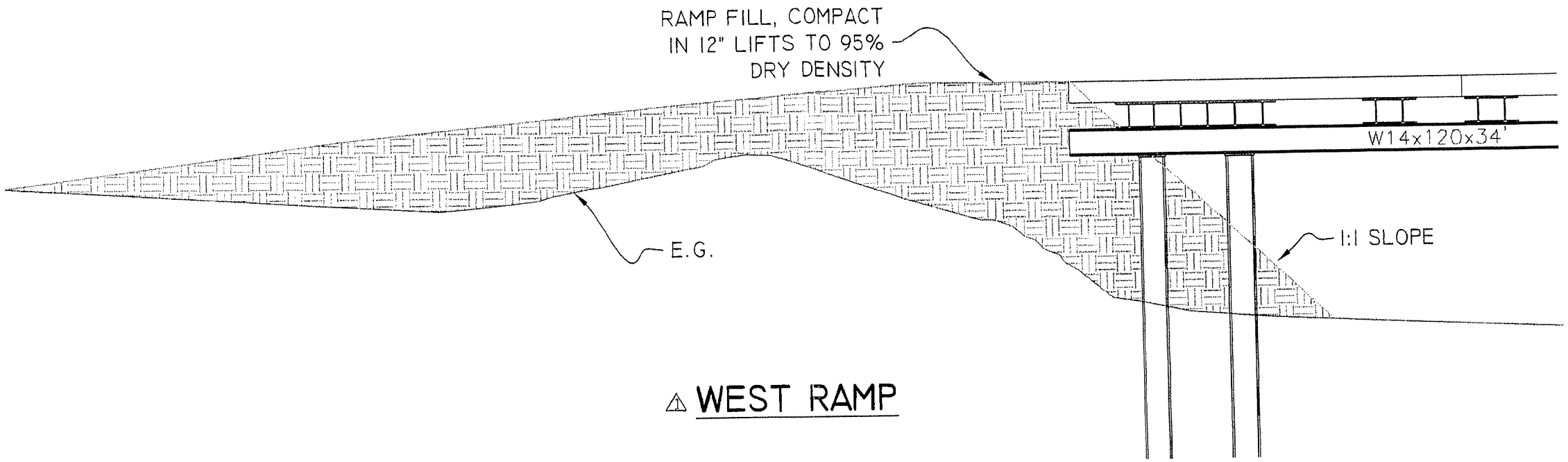

△ WEST RAMP

CONTRACT NO. 04-0120R4

CONTRACT CHANGE ORDER NO 164

SHEET 7 OF 8

REGISTERED PROFESSIONAL ENGINEER
FORREST G. MEGARGEL
C66641
Exp. 6/30/10
CIVIL
STATE OF CALIFORNIA

DESIGN BY: FGM	REV.	DATE	DESCRIPTION
DRAWN BY: FGM	1	9/24/08	REVISED RAMP DETAIL
SCALE: —			

CC MYERS INC.
3286 Fitzgerald Road, Rancho Cordova, CA 95742
P.O. Box 2948, Rancho Cordova, CA 95741
916-635-9370 Fax 916-635-1527

DETAILS 3

TBS CRANE RUNWAY

PROJECT: TBS

CCM JOB#: CCM #215 | FILE: TBS crane runway (current).dwg

SHEET NUMBER: 5 OF 6 SHEETS

MATERIALS ⚠

	BEAMS	22" POSTS	9" POSTS	PRESTRESS CABLES		MISC.
	W36x230 x91'	H=5'-10'	8' White post	P/S Chucks		K-rail
	W36x230 x80'	H=10'-15'	14' Green post	L<25'		Steel shoring plates
	W36x230 x75'	H=15'-20'	20' Orange post	L=25'-50'	90	4'X18' Crane Mats
	W33x241 x80'	H=20'-25'	26' Blue post	L=50'-75'	90	4'X16' Crane Mats
	W24x131 x70'	H=25-30'		L=75'-100'	103	16"x20"x1" Plates
	W24x131 x65'	H=30'-35'		L=100'-125'	224	W14x159 Beam Stiffeners
	W24x131 x60'	H=35'-40'		L=125'-150'	176	W14x120 Beam Stiffeners
	W18x106 x50'	H=40-45'	PADS & BUILDUP	Total Lf		
	W18x106 x40'	H=45'-50'	Concrete 6x6 pads	P/S plates P4		
	W14x145 x80'	H=50'-55'	Concrete 4x6 f/w pads	P/S plates P2	103	W14X132X60'
	W14x145 x60'	H=55'-60'	Concrete 4x6 f/w pads rotated		14	W14X159X34'
	W14x145 x50'	H=60'-65'	4x4 wedges sets	WIRE ROPE CABLES		
	W14x145 x40'	H=65'-70'	sand jacks	L<25'		
	W14x145 x37'	H=70'-75'	cripple caps	L=25'-50'		
	W14x145 x25'	H=75'-80'	12x12 corbels	L=50'-75'		
	W14x145 x12'	H=80'-85'	6x14 wood pads	L=75'-100'		
	W14x120 x68'	H=85'-90'		L=100'-125'		
	W14x120 x51'	H=90'-95'		L=125'-150'		
	W14x120 x37'	H=95'-100'	SOFFIT MATERIALS	Total Lf		
109	W14x120 x34'	H=100'-105	4X8x5/8" BBX Plywood	1/2" Cable clamps		
	W14x120 x25'	H=105'-110'	4x4x12' joists	1 1/8" shackles		
	HP14x73 x25'	H=110'-115'	4x4x20' micro lams			
	HP14x73 x20'	H=115'-120'	4x4x24' micro lams	CONNECTIONS		
	HP12x53 x25'	H=120'-125'	24' soffit panels 6"cc	A (4x)		
	HP12x53 x20'	H=125'-130'	24' soffit panels 9"cc	B (2x)		
	HP10x42 x20'	H=130'-135'	32' soffit panels 9"cc	U (1x)		
		H=135'-140'		"L" Lee connections		
		H=140'-145'		C-clamps		
		H=145'-150'		angle iron		
		Total LF		Hughes Bracket		
		22" Swivel heads		3x3x3/8" angle x6"	200	
		22" pipe base plates				

R6

CONTRACT NO. 04-012024

CONTRACT CHANGE ORDER NO 164

SHEET 8 OF 8

CC MYERS INC.
3286 Fitzgerald Road, Rancho Cordova, CA 95742
P.O. Box 2948, Rancho Cordova, CA 95741
916-635-9370 Fax 916-635-1527

REGISTERED PROFESSIONAL ENGINEER — FOURAT I. RADI — No. C060641 — Exp. 6/30/08 — CIVIL — STATE OF CALIFORNIA

REV	DATE	DESCRIPTION
1	9/24/08	UPDATED TO REFLECT CHANGES
---	---	---
---	---	---
---	---	---
---	---	---

DESIGN BY: FGM
DRAWN BY: FGM
SCALE: ---

MATERIALS

TBS CRANE RUNWAY

PROJECT: TBS
CCM JOB#: CCM #215
FILE: TBS crane runway (current).dwg

SHEET NUMBER: 6 OF 6 SHEETS

STATE OF CALIFORNIA - DEPARTMENT OF TRANSPORTATION

CONTRACT CHANGE ORDER

Change Requested by: Engineer

CCO 165	Suppl. No. 0	Contract No. 04 - 0120R4	Road SF-80-12.6/13.2	FED. AID LOC.: ACBRIM-080-1(097)N

To: **CC MYERS INC**

You are directed to make the following changes from the plans and specifications or do the following described work not included in the plans and specifications for this contract. ***NOTE: This change order is not effective until approved by the Engineer.***

Description of work to be done, estimate of quantities and prices to be paid. (Segregate between additional work at contract price, agreed price and force account.) Unless otherwise stated, rates for rental of equipment cover only such time as equipment is actually used and no allowance will be made for idle time. This last percentage shown is the net accumulated increase or decrease from the original quantity in the Engineer's Estimate.

Adjustment of Compensation at Lump Sum:

In accordance with Section 8-1.09 "Right of Way Delays" of the contract Standard Specifications, compensate the Contractor for delay costs associated with their subcontractor, Condon Johnson & Associates, pertaining to the delays to the construction of the soil nail wall at Bent W7. These delays were incurred from May 5 to May 23, 2008 and July 28 to October 10, 2008 due to survey conflicts.

For these delay costs, the Contractor will be compensated a lump sum of $71,720.00. This sum constitutes full compensation for all costs, including markups, by reason of this change.

Provide compensation to the Contractor for all costs incurred in removing the constructed W7 soil nail wall and in the backfilling of the wall's excavation. Backfilling shall be performed up to approximate elevation 25.0 as determined by the Engineer.

For these wall removal and backfilling costs, the Contractor will be compensated a lump sum of $80,560.00. This sum constitutes full compensation for all costs, including markups, by reason of this change.

Total Cost of Adjustment of Compensation at Lump Sum $152,280.00

Estimated Cost: **Increase** ☑ **Decrease** ☐ **$152,280.00**

By reason of this order the time of completion will be adjusted as follows: 0 days

Submitted by

Signature	Resident Engineer	Date
	BILL CASEY	3-13-09

Approval Recommended by

Signature	Area Construction Manager	Date
Deanna Vilcheck	DEANNA VILCHECK	3/16/09

Engineer Approval by

Signature	Area Construction Manager	Date
Deanna Vilcheck	DEANNA VILCHECK	4/8/09

We the undersigned contractor, have given careful consideration to the change proposed and agree, if this proposal is approved, that we will provide all equipment, furnish the materials, except as may otherwise be noted above, and perform all services necessary for the work above specified, and will accept as full payment therefor the prices shown above.

NOTE: If you, the contractor, do not sign acceptance of this order, your attention is directed to the requirements of the specifications as to proceeding with the ordered work and filing a written protest within the time therein specified.

Contractor Acceptance by

Signature	(Print name and title)	Date
	DANIEL E. HOMICK, PRESIDENT	4/03/09

CONTRACT CHANGE ORDER

Change Requested by: Engineer

CCO 166	Suppl. No. 0	Contract No. 04 - 0120R4	Road SF-80-12.6/13.2	FED. AID LOC.: ACBRIM-080-1(097)N

To: **CC MYERS INC**

You are directed to make the following changes from the plans and specifications or do the following described work not included in the plans and specifications for this contract. ***NOTE: This change order is not effective until approved by the Engineer.***

Description of work to be done, estimate of quantities and prices to be paid. (Segregate between additional work at contract price, agreed price and force account.) Unless otherwise stated, rates for rental of equipment cover only such time as equipment is actually used and no allowance will be made for idle time. This last percentage shown is the net accumulated increase or decrease from the original quantity in the Engineer's Estimate.

Adjustment of Compensation at Lump Sum:

Provide compensation to the Contractor for costs to be incurred in order to improve the fabrication delivery schedule of the skid bent and skid beam of the East Tie-In portion of the Temporary Bypass Structure (Bridge No. 34-0006 (TEMP)). Costs include but are not limited to leasing additional shop space, leasing additional lay down and storage yards, providing additional fabrication equipment and providing additional and extended labor resources.

For this work, the Contractor shall be compensated an agreed lump sum price of $2,028,950.00 which constitutes full and final compensation, including all markups, for the work specified under this change order.

Consideration of a time adjustment will be deferred until completion of the work specified herein. Determination of a commensurate time extension will be made in accordance with Section 8-1.07, "Liquidated Damages", of the Standard Specifications and Section 10-1.20 "Time Related Overhead (TRO)" of the Special Provisions.

Compensation for delays resulting from this work will be made in accordance with Section 8-1.09 "Right of Way Delays" of the Standard Specifications and Section 10-1.20 "Time Related Overhead" of the Special Provisions.

Total Cost of Adjustment of Compensation at Lump Sum $2,028,950.00

The lump sum payment provided herein is based on the shipment of the southern portion of the fabricated steel skid bent and skid beam to the project by February 23, 2009. In the event the fabricated steel is shipped prior to that date, the Contractor shall be paid an incentive of $42,860.00 for each calendar day prior to February 23, 2009 that the steel is shipped. Any incentive payment shall not exceed $900,000.00 and shall be provided under a supplemental change order.

For the purpose of this incentive, the shipment of the fabricated steel shall be defined as the date the last barge carrying the last skid beam segments and skid bent cross beam assemblies of the southern portion of the skid bent and beam departs from the fabricator's facilities in Vancouver, WA. The southern portion of the skid bent and beam shall be defined as Bent 3 through Bent 6 of both Skid Bent A and Skid Bent B, Skid Beams Segments A2 through A4 and Skid Beam Segments B2 through B3.

CONTRACT CHANGE ORDER

Change Requested by: Engineer

CCO 166	Suppl. No. 0	Contract No. 04 - 0120R4	Road SF-80-12.6/13.2	FED. AID LOC.: ACBRIM-080-1(097)N

Estimated Cost: Increase ☑ Decrease ☐ $2,028,950.00

By reason of this order the time of completion will be adjusted as follows: Deferred

Submitted by

Signature	Resident Engineer BILL CASEY	Date 12-11-08

Approval Recommended by

Signature	SFOBB Construction Manager MIKE FORNER	Date 12-18-08

Engineer Approval by

Signature	SFOBB Construction Manager MIKE FORNER	Date 1-15-2009

We the undersigned contractor, have given careful consideration to the change proposed and agree, if this proposal is approved, that we will provide all equipment, furnish the materials, except as may otherwise be noted above, and perform all services necessary for the work above specified, and will accept as full payment therefor the prices shown above.

NOTE: If you, the contractor, do not sign acceptance of this order, your attention is directed to the requirements of the specifications as to proceeding with the ordered work and filing a written protest within the time therein specified.

Contractor Acceptance by

Signature	(Print name and title) DANIEL E. HIMICK, PRESIDENT	Date 10/31/08

STATE OF CALIFORNIA - DEPARTMENT OF TRANSPORTATION

CONTRACT CHANGE ORDER

Change Requested by: Engineer

CCO 166	Suppl. No. 1	Contract No. 04 - 0120R4	Road SF-80-12.6/13.2	FED. AID LOC.: ACBRIM-080-1(097)N

To: CC MYERS INC

You are directed to make the following changes from the plans and specifications or do the following described work not included in the plans and specifications for this contract. ***NOTE: This change order is not effective until approved by the Engineer.***

made for idle time. This last percentage shown is the net accumulated increase or decrease from the original quantity in the Engineer's Estimate.

Adjustment of Compensation at Unit Price:

Provide payment for contractor incentives for early completion of the fabrication of the skid bent and skid beam of the East Tie-In portion of the temporary Bypass Structure (Bridge # 34-0006 (TEMP)).

20 days @ $42,860/day = $857,200.00

1 day @ $42,800/day = $42,800.00

Total Cost of Adjustment of Compensation at Agreed Unit Price $900,000.00

RECEIVED
09 JUN 12 0523

Estimated Cost: Increase ☑ Decrease ☐ $900,000.00

By reason of this order the time of completion will be adjusted as follows: Deferred

Submitted by

Signature	Resident Engineer BILL CASEY	Date 5-14-09

Approval Recommended by

Signature Mike Forner	SFOBB Construction Manager MIKE FORNER	Date 5-15-09

Engineer Approval by

Signature Mike Forner	SFOBB Construction Manager MIKE FORNER	Date 5-15-09

We the undersigned contractor, have given careful consideration to the change proposed and agree, if this proposal is approved, that we will provide all equipment, furnish the materials, except as may otherwise be noted above, and perform all services necessary for the work above specified, and will accept as full payment therefor the prices shown above.

NOTE: If you, the contractor, do not sign acceptance of this order, your attention is directed to the requirements of the specifications as to proceeding with the ordered work and filing a written protest within the time therein specified.

Contractor Acceptance by

Signature N/A	(Print name and title) N/A	Date N/A

STATE OF CALIFORNIA - DEPARTMENT OF TRANSPORTATION

CONTRACT CHANGE ORDER MEMORANDUM

TO: MIKE FORNER / DEANNA VILCHECK	FILE: E.A. 04 - 0120R4
FROM: BILL CASEY	CO-RTE-PM SF-80-12.6/13.2
	FED. NO. ACBRIM-080-1(097)N
CCO#: **166** SUPPLEMENT#: **1** Category Code: **BZZZ**	CONTINGENCY BALANCE (incl. this change) **$58,308,143.60**
COST: **$900,000.00** INCREASE ☑ DECREASE ☐	HEADQUARTERS APPROVAL REQUIRED? ☑ YES ☐ NO
SUPPLEMENTAL FUNDS PROVIDED: **$0.00**	IS THIS REQUEST IN ACCORDANCE WITH ENVIRONMENTAL DOCUMENTS? ☑ YES ☐ NO
CCO DESCRIPTION: Thompson Metal Fab Incentive	**PROJECT DESCRIPTION:** CONSTRUCT ROUTE 80 TEMP BYPASS STRUCTURE

Original Contract Time:	Time Adj. This Change:	Previously Approved CCO Time Adjustments:	Percentage Time Adjusted: (including this change)	Total # of Unreconciled Deferred Time CCO(s): (including this change)
475 Day(s)	**DEF** Day(s)	**1195** Day(s)	**252** %	**8**

THIS CHANGE ORDER PROVIDES FOR:

compensation for contractor incentives for early completion of the fabrication of the skid bent and skid beam of the East Tie-In portion of the Temporary Bypass Structure (Bridge # 34-0006 (TEMP)).

This project, the Temporary Bypass Structure (TBS), was awarded in March 2004 to construct a detour that will allow for the tie in of the new east span of the San Francisco Oakland Bay Bridge to Yerba Buena Island. The TBS encompasses three main structures, the East Tie-In to the existing bridge, the West Tie-In (WTI) to Yerba Buena Island, and the Viaduct structure between the two tie ins.

A December 14, 2006 Department strategy memorandum, approved by Tony Anziano, Toll Bridge Program Manager, and Richard Land, Chief Engineer, recommended that the Department assume the design responsibility for the East Tie-In (ETI) structure. Based on this memorandum, the design of the structure was changed from a design that incorporated the existing steel truss bridge with the new structure to a design that replaces the existing structure with a new structure (roll out / roll in).

This supplemental was anticipated by the original Contract Change Order No. 166, which has been approved and executed. Approval for this change order from the TBPOC was granted on December 23, 2008. As such it is not necessary for the Contractor to sign this supplemental, which will be processed unilaterally. Compensation for this change shall be performed as an Adjustment of Compensation at Agreed Unit Price for a total cost of $900,000.00, which can be financed through the Contingency Fund.

Adjustment of contract time is deferred pending completion of the work specified in this change as it may become the controlling operation in accordance with Section 8-1.07 "Liquidated Damages", of the Standard Specifications and Section 10-1.20 "Time Related Overhead (TRO)" of the Special Provisions.

Compensation for delays resulting from this work will be made in accordance with Section 8-1.09 "Right of Way Delays" of the Standard Specifications and Section 10-1.20 "Time Related Overhead" of the Special Provisions.

This change was concurred with by Alec Melkonians - Asst. Project Manager and Hong Wong - Project Engineer.

Maintenance concurrence is not required, as this work does not affect any permanent roadway features.

ADA Notice: For individuals with sensory disabilities, this document is available in alternate formats. For information call: (916) 654-6410 or TDD (916) 654-3880 or write Records and Forms Management, 1120 N Street, MS-89, Sacramento, CA 95814.

CONCURRED BY:		
Construction Engineer:	Bill Casey, Resident Engineer	Date 5-14-09
Bridge Engineer:		Date
Project Engineer:	Hong Wong, PE	Date 5/13/09
Project Manager:	Alec Melkonians	Date 5/13/09
FHWA Rep.:		Date
Environmental:		Date
Other (specify):		Date
Other (specify):		Date
District Prior Approval By:		Date
HQ (Issue Approve) By:	Bob Molera, HQ CCO Engineer	Date
Resident Engineer's Signature:		Date

5-14-09

ESTIMATE OF COST

	THIS REQUEST	TOTAL TO DATE
ITEMS	$0.00	$0.00
FORCE ACCOUNT	$0.00	$0.00
AGREED PRICE	$0.00	$0.00
ADJUSTMENT	$900,000.00	$2,928,950.00
TOTAL	$900,000.00	$2,928,950.00

FEDERAL PARTICIPATION

☐ PARTICIPATING ☐ PARTICIPATING IN PART ☑ NONE
☐ NON-PARTICIPATING (MAINTENANCE) ☐ NON-PARTICIPATING

FEDERAL SEGREGATION (if more than one Funding Source or P.I.P. type)
☐ CCO FUNDED PER CONTRACT ☐ CCO FUNDED AS FOLLOWS

FEDERAL FUNDING SOURCE	PERCENT

ADA Notice: For individuals with sensory disabilities, this document is available in alternate formats. For information call: (916) 654-6410 or TDD (916) 654-3880 or write Records and Forms Management, 1120 N Street, MS-89, Sacramento, CA 95814.

STATE OF CALIFORNIA - DEPARTMENT OF TRANSPORTATION

CONTRACT CHANGE ORDER

Change Requested by: Engineer

CCO 167	Suppl. No. 0	Contract No. 04 - 0120R4	Road SF-80-12.6/13.2	FED. AID LOC.: ACBRIM-080-1(097)N

To: CC MYERS INC

You are directed to make the following changes from the plans and specifications or do the following described work not included in the plans and specifications for this contract. ***NOTE: This change order is not effective until approved by the Engineer.***

Description of work to be done, estimate of quantities and prices to be paid. (Segregate between additional work at contract price, agreed price and force account.) Unless otherwise stated, rates for rental of equipment cover only such time as equipment is actually used and no allowance will be made for idle time. This last percentage shown is the net accumulated increase or decrease from the original quantity in the Engineer's Estimate.

Adjustment of Compensation at Lump Sum:

Provide compensation to the Contractor for all additional costs incurred by Thompson Metal Fabrication, Inc. due to the delay in the shop drawing approval pertaining to the fabrication of the skid bent and skid beam of the East Tie-In portion of the Temporary Bypass Structure (Bridge No. 34-0006 (TEMP)). Costs include but are not limited to idled shop space and shop labor for the period beginning June 16, 2008 and ending September 30, 2008.

For this work, the Contractor shall be compensated an agreed lump sum price of $632,670.00 which constitutes full and final compensation, including all markups, for the costs specified under this change order.

Total Cost of Adjustment of Compensation at Lump Sum $632,670.00

RECEIVED
JUN 29 2009
0522

Estimated Cost: Increase ☑ Decrease ☐ **$632,670.00**

By reason of this order the time of completion will be adjusted as follows: Deferred

Submitted by

Signature	Resident Engineer	Date
	BILL CASEY	3-13-09

Approval Recommended by

Signature	Area Construction Manager	Date
Deanna Vilcheck	DEANNA VILCHECK	3/16/09

Engineer Approval by

Signature	Area Construction Manager	Date
Deanna Vilcheck	DEANNA VILCHECK	5/6/09

We the undersigned contractor, have given careful consideration to the change proposed and agree, if this proposal is approved, that we will provide all equipment, furnish the materials, except as may otherwise be noted above, and perform all services necessary for the work above specified, and will accept as full payment therefor the prices shown above.

NOTE: **If you, the contractor, do not sign acceptance of this order, your attention is directed to the requirements of the specifications as to proceeding with the ordered work and filing a written protest within the time therein specified.**

Contractor Acceptance by

Signature	(Print name and title)	Date
	DANIEL E. HAMUCK, PRESIDENT	4/30/09

STATE OF CALIFORNIA - DEPARTMENT OF TRANSPORTATION

CONTRACT CHANGE ORDER MEMORANDUM

DATE: 3/9/2009 Page 1 of 2

TO: MIKE FORNER / DEANNA VILCHECK	FILE: E.A. 04 - 0120R4
	CO-RTE-PM SF-80-12.6/13.2
FROM: BILL CASEY	FED. NO. ACBRIM-080-1(097)N
CCO#: 167 SUPPLEMENT#: 0 Category Code: CHTX	CONTINGENCY BALANCE (incl. this change) $68,385,160.05
COST: $632,670.00 INCREASE ☑ DECREASE ☐	HEADQUARTERS APPROVAL REQUIRED? ☑ YES ☐ NO
SUPPLEMENTAL FUNDS PROVIDED: $0.00	IS THIS REQUEST IN ACCORDANCE WITH ENVIRONMENTAL DOCUMENTS? ☑ YES ☐ NO
CCO DESCRIPTION: Thompson Metal Fab. Shop Drawing Delay	PROJECT DESCRIPTION: CONSTRUCT ROUTE 80 TEMP BYPASS STRUCTURE

Original Contract Time:	Time Adj. This Change:	Previously Approved CCO Time Adjustments:	Percentage Time Adjusted: (including this change)	Total # of Unreconciled Deferred Time CCO(s): (including this change)
475 Day(s)	DEF Day(s)	1195 Day(s)	252 %	8

THIS CHANGE ORDER PROVIDES FOR:

compensation for delay costs incurred by the Contractor's steel fabricator due to shop drawing approval delays pertaining to the fabrication of the steel skid beams and towers of the East Tie-In portion of the Temporary Bypass Structure (Bridge No. 34-0006 (TEMP)).

This project, the Temporary Bypass Structure (TBS), was awarded in March 2004 to construct a detour that will allow for the tie in of the new east span of the San Francisco Oakland Bay Bridge to Yerba Buena Island. The TBS encompasses three main structures, the East Tie-In to the existing bridge, the West Tie-In (WTI) to Yerba Buena Island and the Viaduct structure between the two tie ins.

The original contract was awarded as a performance based contract with the contractor responsible for the design of the structures based upon meeting specified design criteria. The Department issued a December 14, 2006 memo entitled Strategy for South-South Detour Contract Completion which was approved by Tony Anziano (Toll Bridge Program Manager), Richard Land (Chief Engineer) and subsequently by the TBPOC. That memo recommended that the design of the ETI structure be assumed by the Department as opposed to the as-bid performance based contractor design.

The Department directed new design of the ETI structure provides for a roll-out / roll-in concept with a new double deck steel truss span being erected adjacent to the existing span and then rolled into place after the existing span is rolled out. The existing and new trusses will be rolled out and rolled in on top of a 2 temporary steel skid beams each supported by 6 steel towers up to 46 meters in height. Change Order No. 116 provided for the fabrication of this skid beams and towers which is comprised of approximately 3,000 metric tons of steel.

Under terms agreed to between the contractor and the Department, the shop drawings for the skid beams and towers were to be created and approved by the Department and then issued to the contractor for fabrication. These shop drawings were to be created by a design consultant employed by the Office of Structure Contract Management (OSCM) who would work in concert with the OSCM design consultant in charge of the entire ETI structure.

It was originally anticipated that the tower and skid beam shop drawings would be approved for fabrication by June 16, 2008 and June 30, 2008 respectively. The approved tower shop drawings were not actually issued until September 10, 2008 with the approved skid beam shop drawings issued on September 30, 2008. This represented a 13 and 14 week delay to the fabricator's start of fabrication. This change order provides compensation to the steel fabricator of the tower and skid beam due to this 13 to 14 week delay to the start of fabrication.

Costs resulting from the shop drawing approval delay include unabsorbed labor and shop time during the delay period. The fabricator was able to mitigate a majority of the 13 to 14 week delay by absorbing their as-planned labor and shop space on other on-going projects. However, the fabricator was constrained by the uncertainty of shop drawing approval that was being projected by the Department to be approved within weeks throughout the entirety of the delay period.

The contractor shall be compensated for the inefficiencies related to this redistribution of labor and shop space. Compensation is based on an established shop labor rate which is supported by 2 separate Department audits pertaining to fabricator delays on other SFOBB projects. The affected as-plan labor is supported by the labor component of the agreed price provided under Change Order No 116.

ADA Notice: For individuals with sensory disabilities, this document is available in alternate formats. For information call: (916) 654-6410 or TDD (916) 654-3880 or write

Compensation for these costs shall be paid as an adjustment of compensation at an agreed lump sum price of $632,670.00 which shall be financed from the contract's contingency funds. A cost estimate is on file.

Adjustment of contract time is deferred as the work may affect the controlling operation.

This change was concurred by Mike Whiteside - YBI Coordination Engineer, Alec Melkonians - Asst. Project Manager and Hong Wong - Project Engineer.

Maintenance concurrence is not required as the work doesn't affect any permanent roadway features.

CONCURRED BY:			
Construction Engineer:		Date	
Bridge Engineer:	Mike Whiteside, Toll Bridge Design	Date	3/17/09
Project Engineer:	Hong Wong, PE	Date	3/10/09
Project Manager:	Alec Melkonians	Date	3/10/09
FHWA Rep.:		Date	
Environmental:		Date	
Other (specify):		Date	
Other (specify):		Date	
District Prior Approval By:		Date	
HQ (Issue Approve) By:	Bob Molera, HQ CCO Engineer	Date	3/16/09
Resident Engineer's Signature:		Date	3-13-09

ESTIMATE OF COST	THIS REQUEST	TOTAL TO DATE
ITEMS	$0.00	$0.00
FORCE ACCOUNT	$0.00	$0.00
AGREED PRICE	$0.00	$0.00
ADJUSTMENT	$632,670.00	$632,670.00
TOTAL	$632,670.00	$632,670.00

FEDERAL PARTICIPATION

☐ PARTICIPATING ☐ PARTICIPATING IN PART ☑ NONE
☐ NON-PARTICIPATING (MAINTENANCE) ☐ NON-PARTICIPATING

FEDERAL SEGREGATION (if more than one Funding Source or P.I.P. type)
☐ CCO FUNDED PER CONTRACT ☐ CCO FUNDED AS FOLLOWS

FEDERAL FUNDING SOURCE	PERCENT

ADA Notice: For individuals with sensory disabilities, this document is available in alternate formats. For information call: (916) 654-6410 or TDD (916) 654-3880 or write

CONTRACT CHANGE ORDER

Change Requested by: Engineer

CCO: 168	Suppl. No. 0	Contract No. 04 - 0120R4	Road SF-80-12.6/13.2	FED. AID LOC.:

To: **CC MYERS INC**

You are directed to make the following changes from the plans and specifications or do the following described work not included in the plans and specifications for this contract. ***NOTE: This change order is not effective until approved by the Engineer.***

Description of work to be done, estimate of quantities and prices to be paid. (Segregate between additional work at contract price, agreed price and force account.) Unless otherwise stated, rates for rental of equipment cover only such time as equipment is actually used and no allowance will be made for idle time. This last percentage shown is the net accumulated increase or decrease from the original quantity in the Engineer's Estimate.

Incorporate the changes to the West Tie-In portion of the Temporary Bypass Structure (Bridge No. 34-0006 (TEMP)) as shown in the revised plan sheets of Sheets No. 2 through 21 of this change order.

Adjustment of Compensation at Lump Sum:

For all costs associated with the changes incorporated into the West Tie-In structure under this change order, the Contractor shall be compensated an agreed lump sum of $147,390.00. This lump sum constitutes full compensation, including all markups, for all costs associated with this change.

Estimated cost of Adjustment of Compensation at Lump Sum $147,390.00

RECEIVED
JUN 23 10
04-0120R4

Estimated Cost: Increase ☑ Decrease ☐ **$147,390.00**

By reason of this order the time of completion will be adjusted as follows: 0 days

Submitted by

Signature	Resident Engineer	Date
Deanna Vilcheck	for BILL CASEY	2/11/10

Approval Recommended by

Signature	Area Construction Manager	Date
Deanna Vilcheck	DEANNA VILCHECK	2/11/10

Engineer Approval by

Signature	Area Construction Manager	Date
Deanna Vilcheck	DEANNA VILCHECK	3/22/10

We the undersigned contractor, have given careful consideration to the change proposed and agree, if this proposal is approved, that we will provide all equipment, furnish the materials, except as may otherwise be noted above, and perform all services necessary for the work above specified, and will accept as full payment therefor the prices shown above.

NOTE: If you, the contractor, do not sign acceptance of this order, your attention is directed to the requirements of the specifications as to proceeding with the ordered work and filing a written protest within the time therein specified.

Contractor Acceptance by

Signature	(Print name and title)	Date
[signature]	DANIEL E. HUMICK, PRESIDENT	3/2/10

CONTRACT CHANGE ORDER

Change Requested by: Engineer

CCO: 168	Suppl. No. 0	Contract No. 04 - 0120R4	Road SF-80-12.6/13.2	FED. AID LOC.:

To: CC MYERS INC

You are directed to make the following changes from the plans and specifications or do the following described work not included in the plans and specifications for this contract. ***NOTE: This change order is not effective until approved by the Engineer.***

Description of work to be done, estimate of quantities and prices to be paid. (Segregate between additional work at contract price, agreed price and force account.) Unless otherwise stated, rates for rental of equipment cover only such time as equipment is actually used and no allowance will be made for idle time. This last percentage shown is the net accumulated increase or decrease from the original quantity in the Engineer's Estimate.

Incorporate the changes to the West Tie-In portion of the Temporary Bypass Structure (Bridge No. 34-0006 (TEMP)) as shown in the revised plan sheets of Sheets No. 2 through 21 of this change order.

Adjustment of Compensation at Lump Sum:

For all costs associated with the changes incorporated into the West Tie-In structure under this change order, the Contractor shall be compensated an agreed lump sum of $147,390.00. This lump sum constitutes full compensation, including all markups, for all costs associated with this change.

Estimated cost of Adjustment of Compensation at Lump Sum $147,390.00

Estimated Cost: Increase ☑ Decrease ☐ **$147,390.00**

By reason of this order the time of completion will be adjusted as follows: 0 days

Submitted by		
Signature Deanna Vilcheck	**Resident Engineer** for BILL CASEY	**Date** 2/11/10
Approval Recommended by		
Signature Deanna Vilcheck	**Area Construction Manager** DEANNA VILCHECK	**Date** 2/11/10
Engineer Approval by		
Signature	**Area Construction Manager** DEANNA VILCHECK	**Date**

We the undersigned contractor, have given careful consideration to the change proposed and agree, if this proposal is approved, that we will provide all equipment, furnish the materials, except as may otherwise be noted above, and perform all services necessary for the work above specified, and will accept as full payment therefor the prices shown above.

NOTE: If you, the contractor, do not sign acceptance of this order, your attention is directed to the requirements of the specifications as to proceeding with the ordered work and filing a written protest within the time therein specified.

Contractor Acceptance by		
Signature	**(Print name and title)** DANIEL E. Hunick, PRESIDENT	**Date** 3/2/10

DIST	COUNTY	ROUTE	KILOMETER POST TOTAL PROJECT	SHEET No	TOTAL SHEETS
04	SF	80	12.6/13.2		

08-11-08
REGISTERED CIVIL ENGINEER DATE

PLANS APPROVAL DATE

The State of California or its officers or agents shall not be responsible for the accuracy or completeness of electronic copies of this plan sheet.

REGISTERED PROFESSIONAL ENGINEER — M. J. CULLEN — No. C 40620 — Exp. 03-31-09 — CIVIL — STATE OF CALIFORNIA

Note: For pile details in Bent 47, see "Bent 47 Pile Details" sheet

MARK	DATE	REVISION(S) DESCRIPTIONS	DES	CHK	DET
1	07-10-08	Eliminated Rebar Cage cut off elevation	CD	MC	GS

REGISTERED CIVIL ENGINEER: DATE:

CONTRACT CHANGE ORDER NO. 168
SHEET 2 OF 21

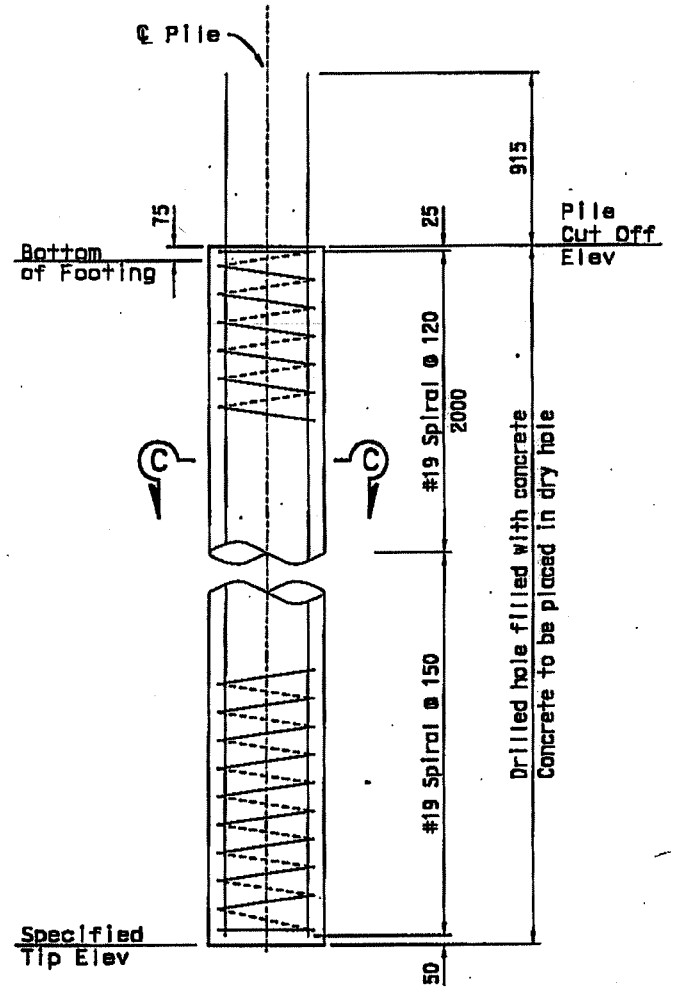

ELEVATION FOOTINGS & ABUTMENT 47A
1:20

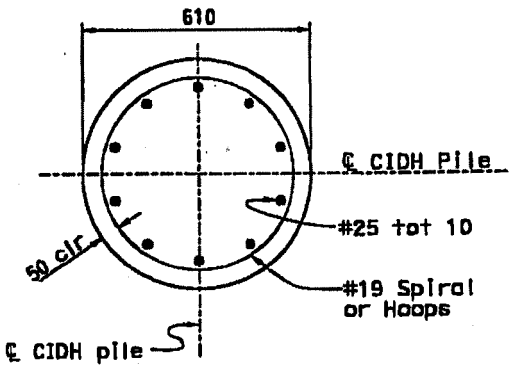

SECTION C-C
1:10

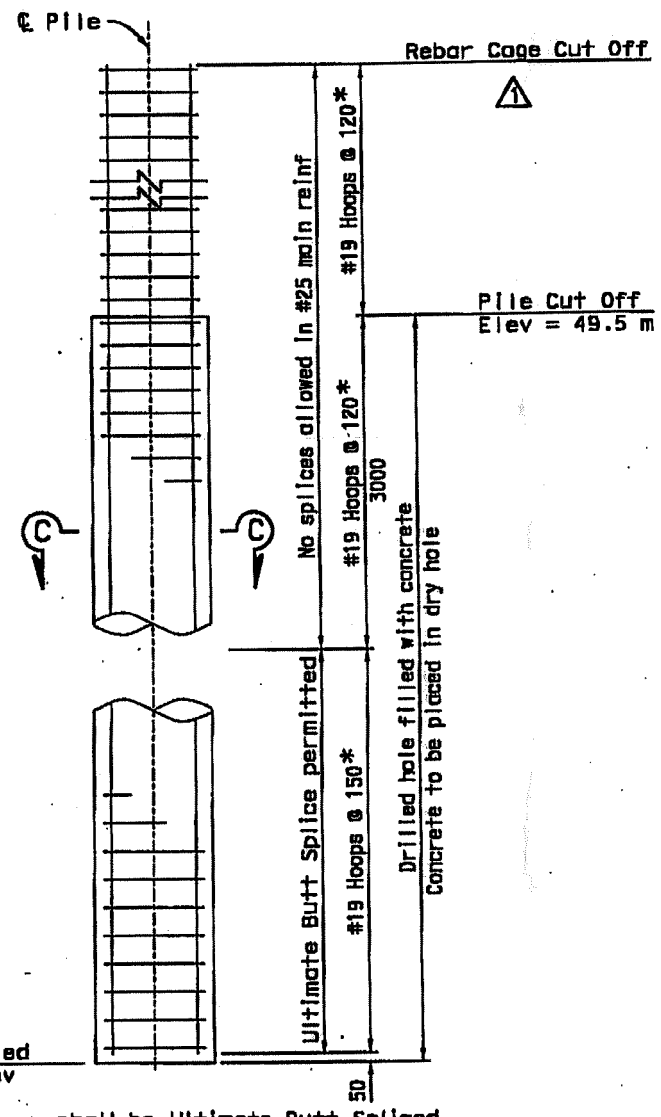

*All Hoops shall be Ultimate Butt Spliced

ELEVATION BENTS 38 & 39
1:20

NOTE:
THE CONTRACTOR SHALL VERIFY ALL CONTROLLING FIELD DIMENSIONS BEFORE ORDERING OR FABRICATING ANY MATERIAL.

610 mm CIDH CONCRETE PILE

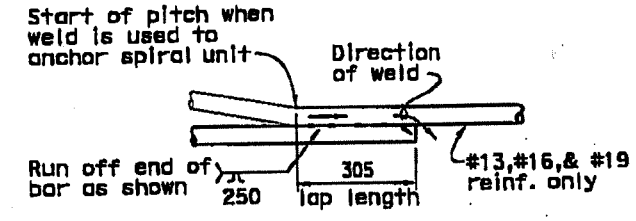

Note: Flare weld to be made in direction shown.

WELDED LAP SPLICE AND ANCHOR

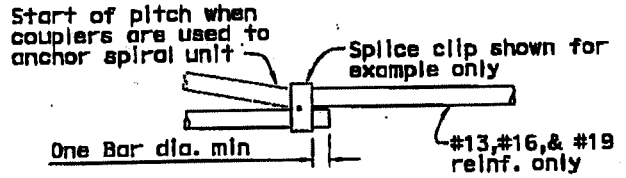

MECHANICAL LAP SPLICE AND ANCHOR

SPIRAL SPLICE AND END ANCHOR DETAIL
no scale

PILE DATA - 610 mm CIDH CONCRETE PILES

LOCATION	DESIGN LOADING (KN)	NOMINAL RESISTANCE (kN)		CUT-OFF ELEVATION (m)	CIDH PILE DESIGN TIP ELEV (m)	CIDH SPECIFIED TIP ELEV (m)
		COMPRESSION	TENSION			
Bent 38	1250	2500	N/A	49.500	40.000	40.000 (1)(3)
Bent 39	1250	2500	N/A	49.500	40.000	40.000 (1)(3)
Footing No. 1	1250	2500	1250	47.675	39.000	39.000 (1)
Footing No. 2	1250	2500	1250	47.875	36.500	36.500 (1)
Footing No. 3	1250	2500	1250	48.475	34.000	34.000 (1)
Footing No. 4	1250	2500	1250	47.875	34.000	34.000 (1)
Footing No. 5	1250	2500	1250	48.475	39.500	39.500 (1)(2)
Footing No. 6	1250	2500	1250	48.475	35.500	35.500 (1)(2)
Footing No. 7	1250	2500	1250	47.875	33.000	33.000 (1)(2)
Footing No. 8	1250	2500	1250	47.175	33.000	33.000 (1)(2)
Abut 47A	900	1800	N/A	48.750	34.300	34.300 (1)

PILE DATA - 2.13 m CIDH CONCRETE PILES

LOCATION	DESIGN LOADING (KN)	NOMINAL RESISTANCE (kN)		CUT-OFF ELEVATION (m)	CIDH PILE DESIGN TIP ELEV (m)	CIDH SPECIFIED TIP ELEV (m)
		COMPRESSION	TENSION			
Bent 47L	8000	16 000	0	47.975	24.000	24.000
Bent 47R	8000	16 000	0	49.200	25.000	25.000

Note:
Design Tip Elevation is controlled by the following demands:
(1) Compression, (2) Tension, (3) Lateral Loads

Caltrans Metric

	BY	CHECKED
DESIGN	C. M. Duan	M. J. Cullen
DETAILS	G. Souza	M. J. Cullen
QUANTITIES	C. M. Duan	M. J. Cullen

ALL DIMENSIONS ARE IN MILLIMETERS UNLESS OTHERWISE SHOWN

ORIGINAL SCALE IN MILLIMETERS FOR REDUCED PLANS 0 10 20 30 40 50 60 70 80 90 100

STATE OF CALIFORNIA
DEPARTMENT OF TRANSPORTATION

DIVISION OF ENGINEERING SERVICES
STRUCTURE DESIGN
DESIGN BRANCH 5

CU 04251
EA 01Z0P1

FILE => 34-0006-a_pile_data_tables-r1.dgn

BRIDGE NO. 34-0006
KILOMETER POST 12.6

WEST TIE IN PHASE 2
SOUTH - SOUTH DETOUR
PILE DATA TABLES

SHEET 11R1 OF 64

REVISION DATES: 7-24-07 | 8-28-07 | 9-14-07 | 9-28-07 | 10-26-07 | 8-11-08

STRUCTURES DESIGN DETAIL SHEET (METRIC) (REV.03-17-04)

USERNAME => dsouza DATE PLOTTED => 13-AUG-2008 TIME PLOTTED => 16:43

DIST	COUNTY	ROUTE	KILOMETER POST TOTAL PROJECT	SHEET No	TOTAL SHEETS
04	SF	80	12.6/13.2		

08-11-08
REGISTERED CIVIL ENGINEER DATE

PLANS APPROVAL DATE

The State of California or its officers or agents shall not be responsible for the accuracy or completeness of electronic copies of this plan sheet.

REGISTERED PROFESSIONAL ENGINEER N. J. CULLEN No. C 40620 Exp. 03-31-09 CIVIL STATE OF CALIFORNIA

MARK	DATE	REVISION(S) DESCRIPTIONS	DES	CHK	DET
2	08-11-08	Revised locations for mechanical couplers	CD	MC	GS
1	06-11-08	Add prestress conduits	CD	MC	GS

REGISTERED CIVIL ENGINEER: DATE:

CONTRACT CHANGE ORDER NO. 168
SHEET 3 OF 21

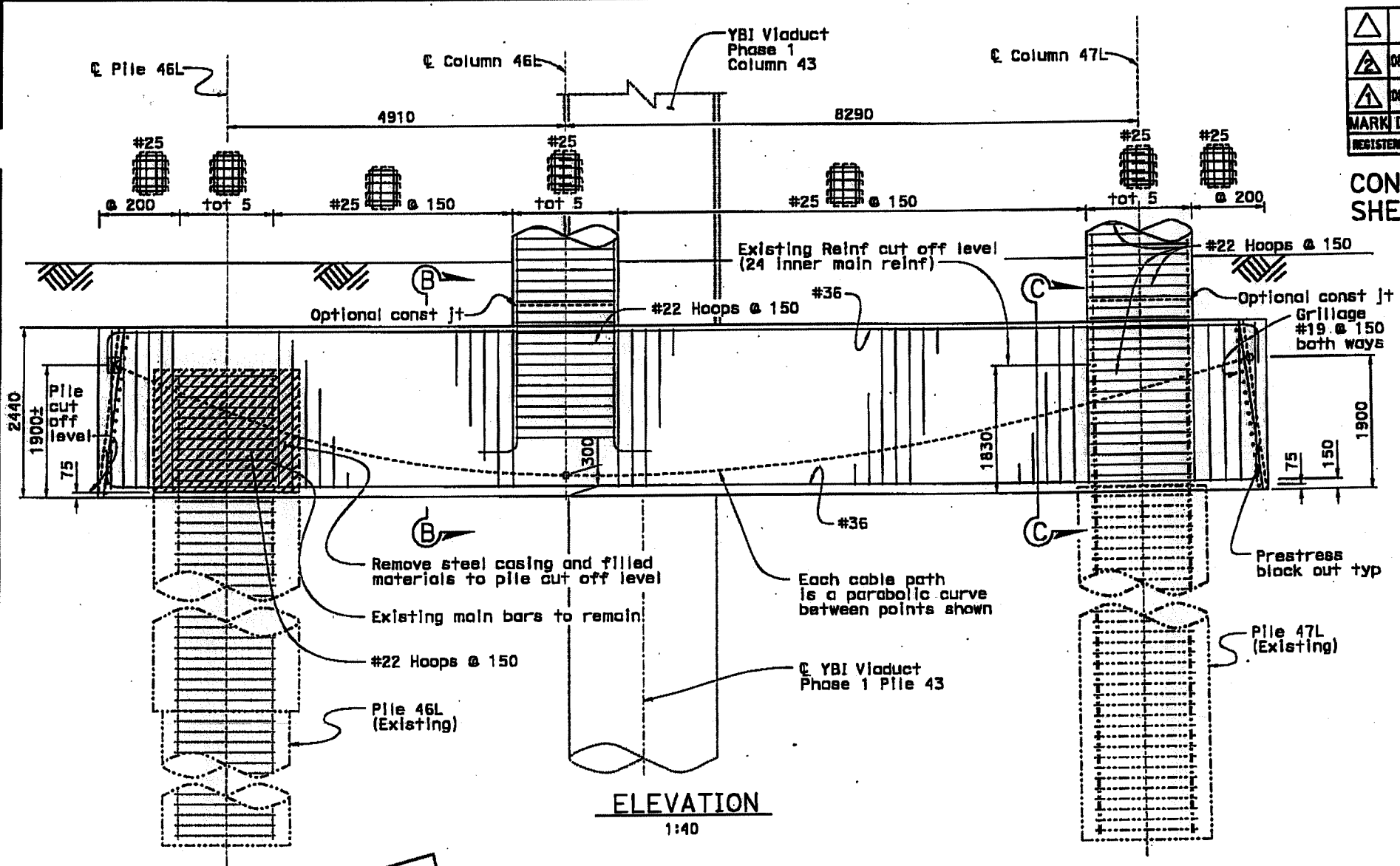

ELEVATION
1:40

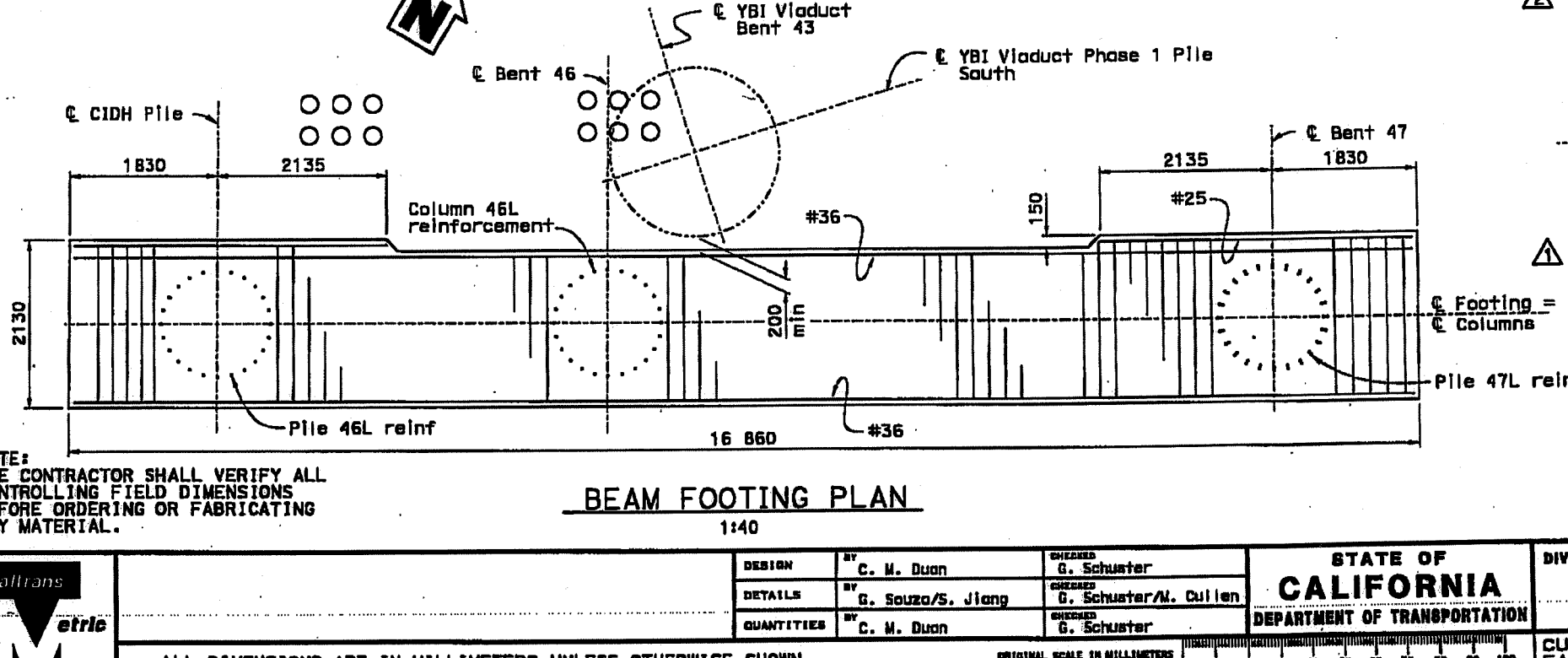

NOTE:
THE CONTRACTOR SHALL VERIFY ALL CONTROLLING FIELD DIMENSIONS BEFORE ORDERING OR FABRICATING ANY MATERIAL.

BEAM FOOTING PLAN
1:40

REGISTERED PROFESSIONAL ENGINEER M.J.Cullen No. C 40620 Exp. 03-31-09 CIVIL STATE OF CALIFORNIA

PRESTRESSING NOTES

1860 MPa Low Relaxation Strands:

Pjack = 12 600 kN

Anchor Set = 10 mm

Friction curvature coefficient μ = 0.20

Friction wobble coefficient K = 6.6 x 10-⁴/mm

Concrete: f'c = 28.0 Mpa @ 28 days
f'ci = 25.5 Mpa @ time of stressing

Contractor shall submit elongation calculations based on initial stress of
☒ = 0.870 times jacking stress

One end stressing shall be performed from Northeast end.

Notes: 1. For Pile 46L see "West Tie In Phase 1 YBI Viaduct Replacement" plans.
2. For Pile 47L see "Bent 47 Pile Details" sheet.

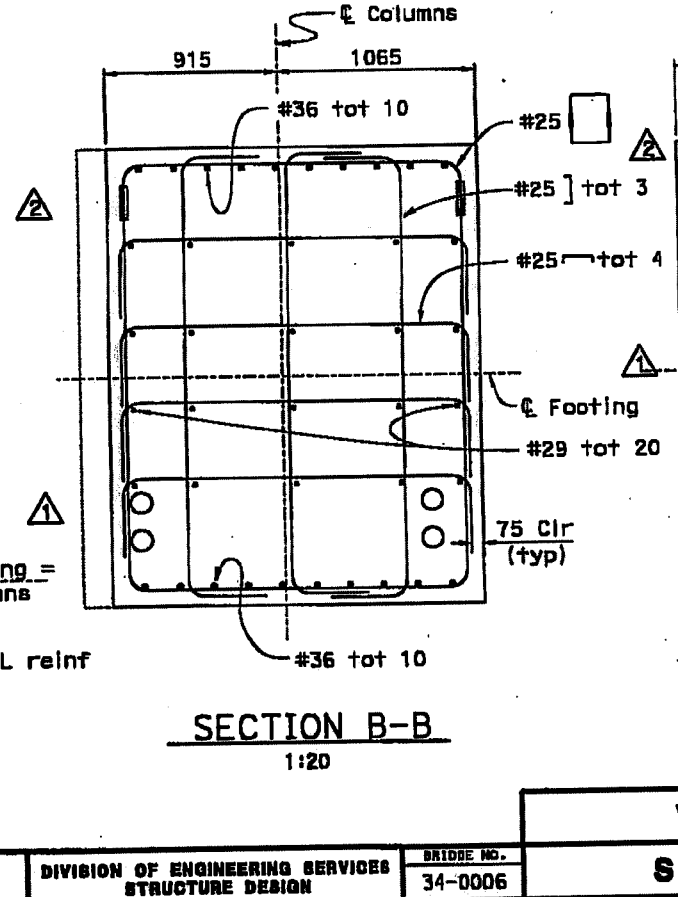

SECTION B-B
1:20

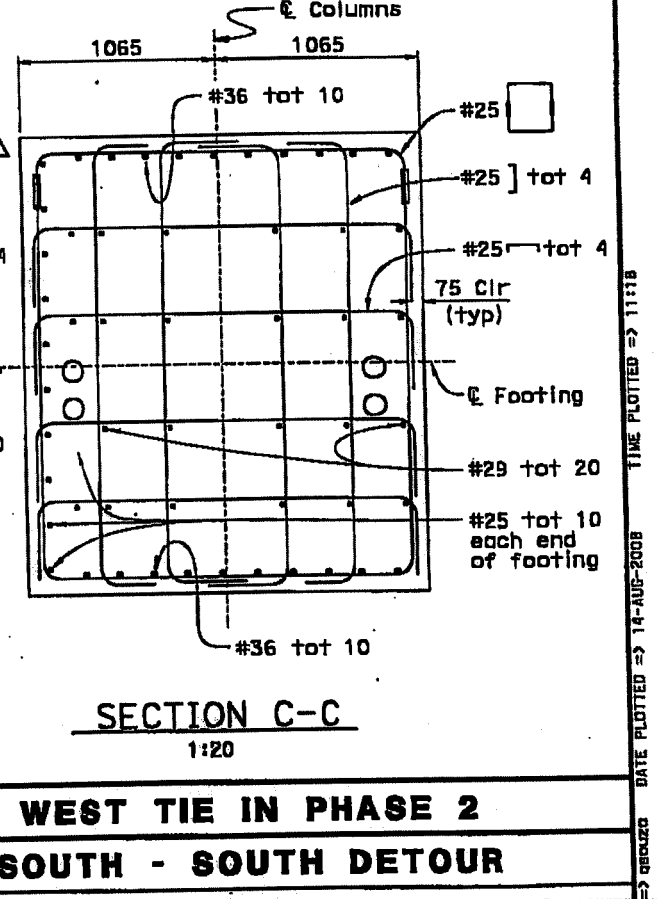

SECTION C-C
1:20

DESIGN	BY C. M. Duan	CHECKED G. Schuster	
DETAILS	BY G. Souza/S. Jiang	CHECKED G. Schuster/M. Cullen	
QUANTITIES	BY C. M. Duan	CHECKED G. Schuster	

STATE OF CALIFORNIA
DEPARTMENT OF TRANSPORTATION

DIVISION OF ENGINEERING SERVICES
STRUCTURE DESIGN
DESIGN BRANCH 5

CU 04251
EA 0120P1

FILE => 34-0006-g_ftng_dt104_r1.dgn

ALL DIMENSIONS ARE IN MILLIMETERS UNLESS OTHERWISE SHOWN

ORIGINAL SCALE IN MILLIMETERS FOR REDUCED PLANS 0 10 20 30 40 50 60 70 80 90 100

BRIDGE NO. 34-0006
KILOMETER POST 12.6

WEST TIE IN PHASE 2
SOUTH - SOUTH DETOUR
FOOTING DETAILS NO. 4

DISREGARD PRINTS BEARING EARLIER REVISION DATES

REVISION DATES: 08-11-08

SHEET 16R1 OF 64

STRUCTURES DESIGN DETAIL SHEET (METRIC) (REV.03-17-04)

DATE PLOTTED => 14-AUG-2008
TIME PLOTTED => 11:18
USERNAME => dbouza

DIST	COUNTY	ROUTE	KILOMETER POST TOTAL PROJECT	SHEET No	TOTAL SHEETS
04	SF	80	12.6/13.2		

M J Cullen 10-30-08
REGISTERED CIVIL ENGINEER DATE

PLANS APPROVAL DATE

The State of California or its officers or agents shall not be responsible for the accuracy or completeness of electronic copies of this plan sheet.

REGISTERED PROFESSIONAL ENGINEER — M. J. CULLEN — No. C 40820 — Exp. 03-31-09 — CIVIL — STATE OF CALIFORNIA

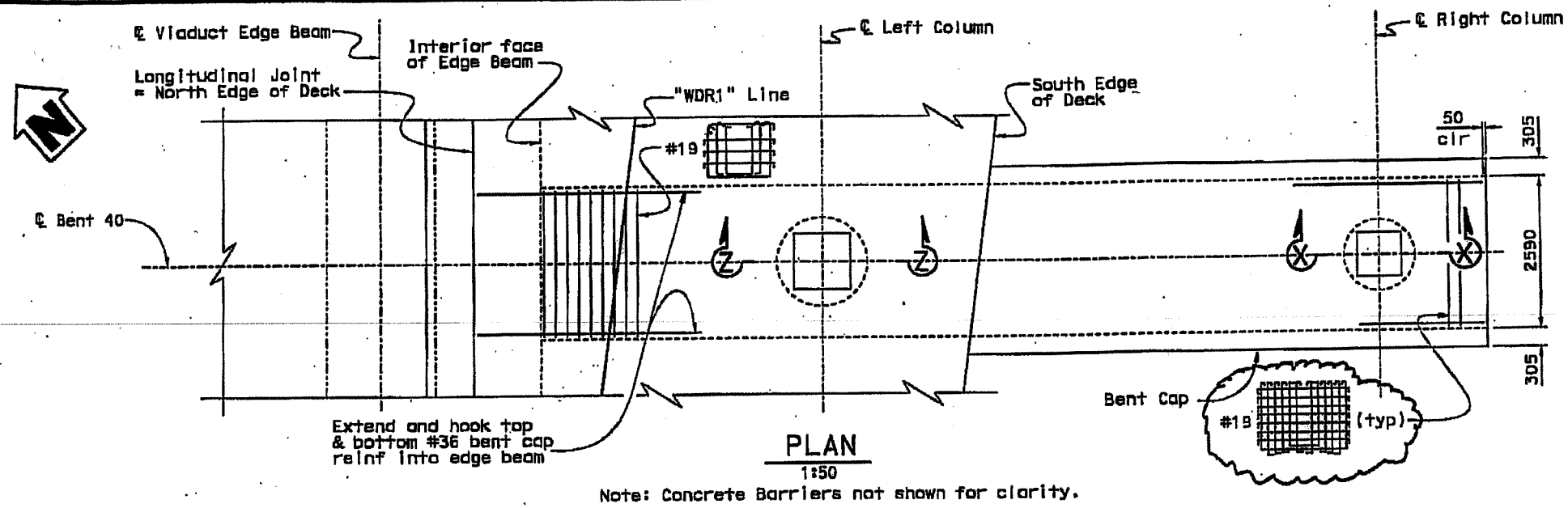

PLAN
1:50

Note: Concrete Barriers not shown for clarity.

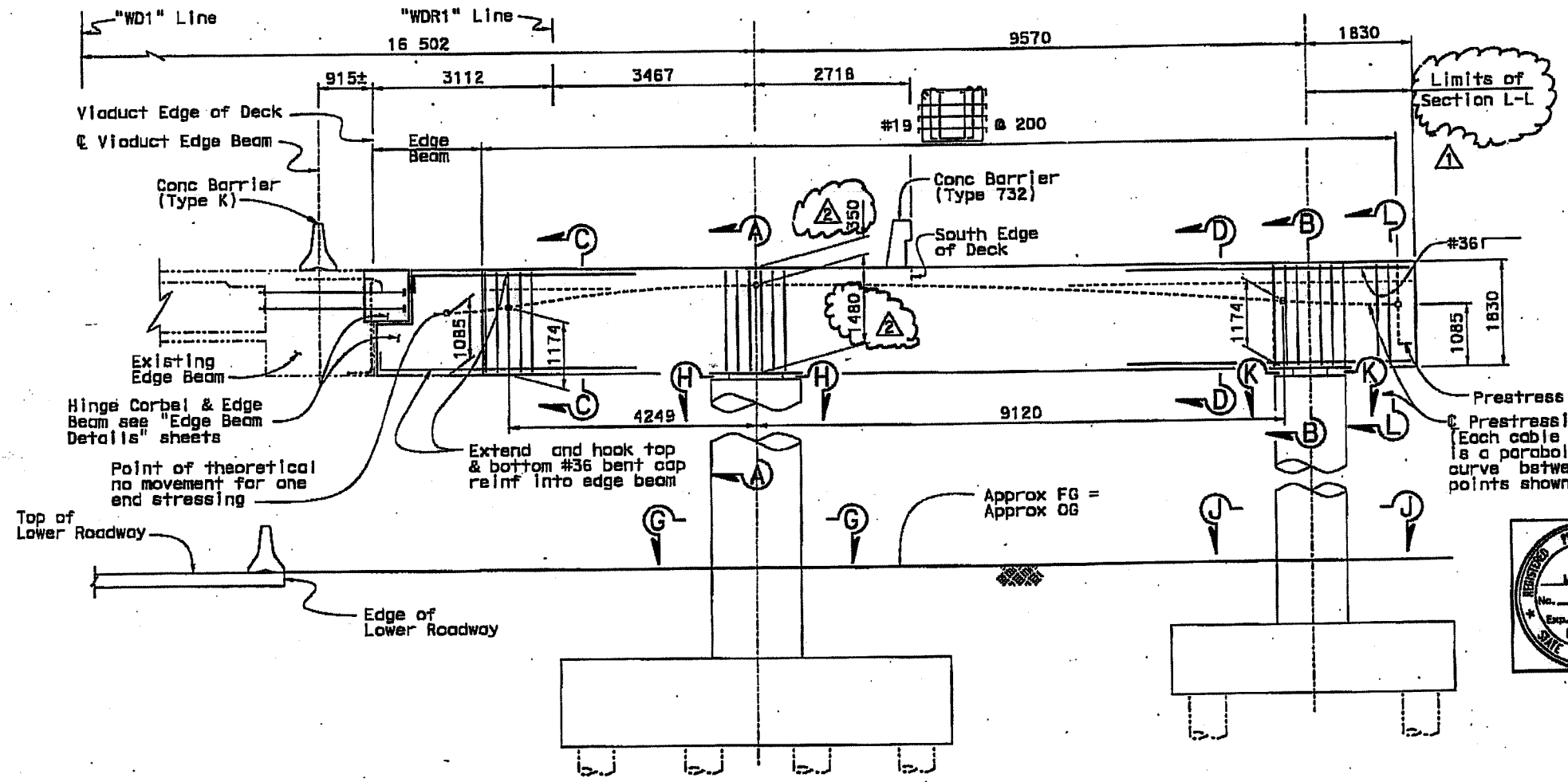

ELEVATION
1:50
STA "WDR1" 50+32.269

BENT CAP PRESTRESSING NOTES

1860 MPa Low Relaxation Strands:

Pjack = 30 370 kN (3)

Anchor Set = 10 mm

Friction curvature coefficient μ = 0.20

Friction wobble coefficient K = 6.6 x 10^{-7}/mm

Concrete: f'c = 45.0 Mpa @ 28 days
f'ci = 30.0 Mpa @ time of stressing

Contractor shall submit elongation calculations based on initial stress at
⊠ = 0.930 times jacking stress

One end stressing shall be performed from Southeast end.

Notes:

1. No splices allowed in main column reinforcement.
2. For Edge Beam details, see "Edge Beam Details" sheets.
3. For Sections X-X and Z-Z see "Bent Cap Details No. 2" sheet.
4. For Sections G-G and H-H see "Column Details No. 1" sheet.
5. For Sections J-J and K-K see "Column Details No. 2" sheet.
6. For Sections A-A, B-B, C-C and D-D see "Bent Cap Details No. 1" sheet.

REGISTERED PROFESSIONAL ENGINEER — M. J. Cullen — No. C 40820 — Exp. 03-31-09 — CIVIL — STATE OF CALIFORNIA

MARK	DATE	REVISION(S) DESCRIPTIONS	DES	CHK	DET
3	10-30-08	Changed note	MC	CD	GS
2	10-30-08	Changed dimension	MC	CD	GS
1	10-30-08	Added Section L-L	MC	CD	GS

REGISTERED CIVIL ENGINEER: DATE:

CONTRACT CHANGE ORDER NO. 168
SHEET 4 OF 21

LEGEND:

------ Indicates Existing Structure

NOTE:
THE CONTRACTOR SHALL VERIFY ALL CONTROLLING FIELD DIMENSIONS BEFORE ORDERING OR FABRICATING ANY MATERIAL.

	BY	CHECKED
DESIGN	C. M. Duon	D. Schuster
DETAILS	A. Chen/G. Souza/S. Jiang	M. Cullen/G. Schuster
QUANTITIES	C. M. Duon	M. J. Cullen

Caltrans Metric

ALL DIMENSIONS ARE IN MILLIMETERS UNLESS OTHERWISE SHOWN

ORIGINAL SCALE IN MILLIMETERS FOR REDUCED PLANS 0 10 20 30 40 50 60 70 80 90 100

STATE OF CALIFORNIA
DEPARTMENT OF TRANSPORTATION

DIVISION OF ENGINEERING SERVICES
STRUCTURE DESIGN
DESIGN BRANCH 5

CU 04251
EA 0120P1

FILE => 34-0006-h-b40_lo_r1.dgn

BRIDGE NO. 34-0006
KILOMETER POST 12.6

DISREGARD PRINTS BEARING EARLIER REVISION DATES

REVISION DATES: 10-30-08

SHEET 19R1 OF 64

STRUCTURES DESIGN DETAIL SHEET (METRIC) (REV.03-17-04)

WEST TIE IN PHASE 2
SOUTH - SOUTH DETOUR
BENT 40 LAYOUT

USERNAME => GSOUZA DATE PLOTTED => 31-OCT-2008 TIME PLOTTED => 10:09

DIST	COUNTY	ROUTE	KILOMETER POST TOTAL PROJECT	SHEET No	TOTAL SHEETS
04	SF	80	12.6/13.2		

REGISTERED CIVIL ENGINEER 10-30-08 DATE

PLANS APPROVAL DATE

The State of California or its officers or agents shall not be responsible for the accuracy or completeness of electronic copies of this plan sheet.

REGISTERED PROFESSIONAL ENGINEER M. J. CULLEN No. C 40620 Exp. 03-31-09 CIVIL STATE OF CALIFORNIA

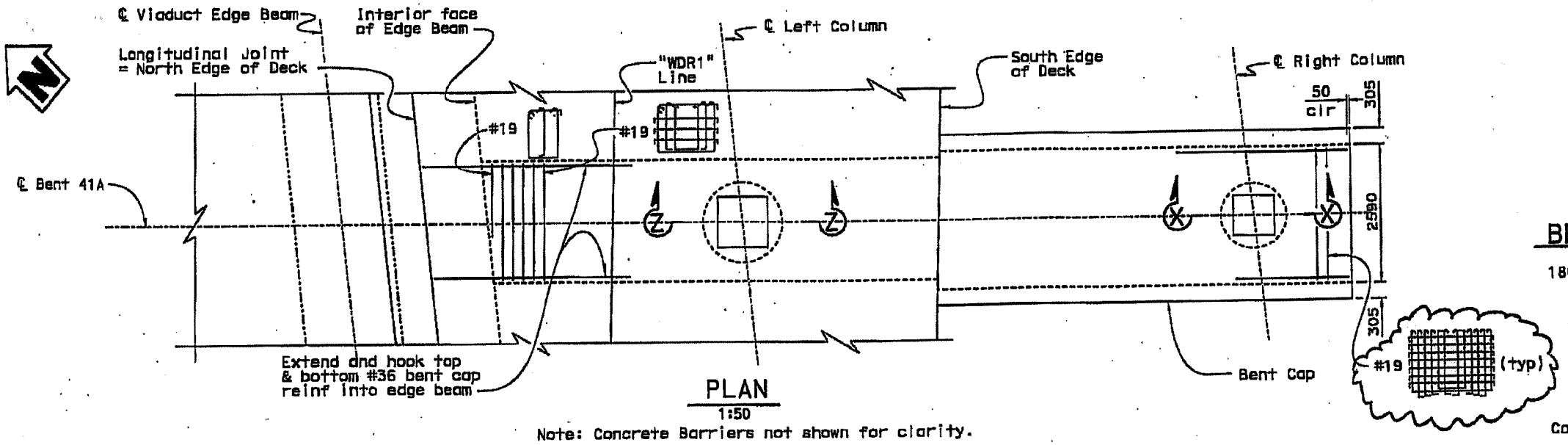

PLAN
1:50
Note: Concrete Barriers not shown for clarity.

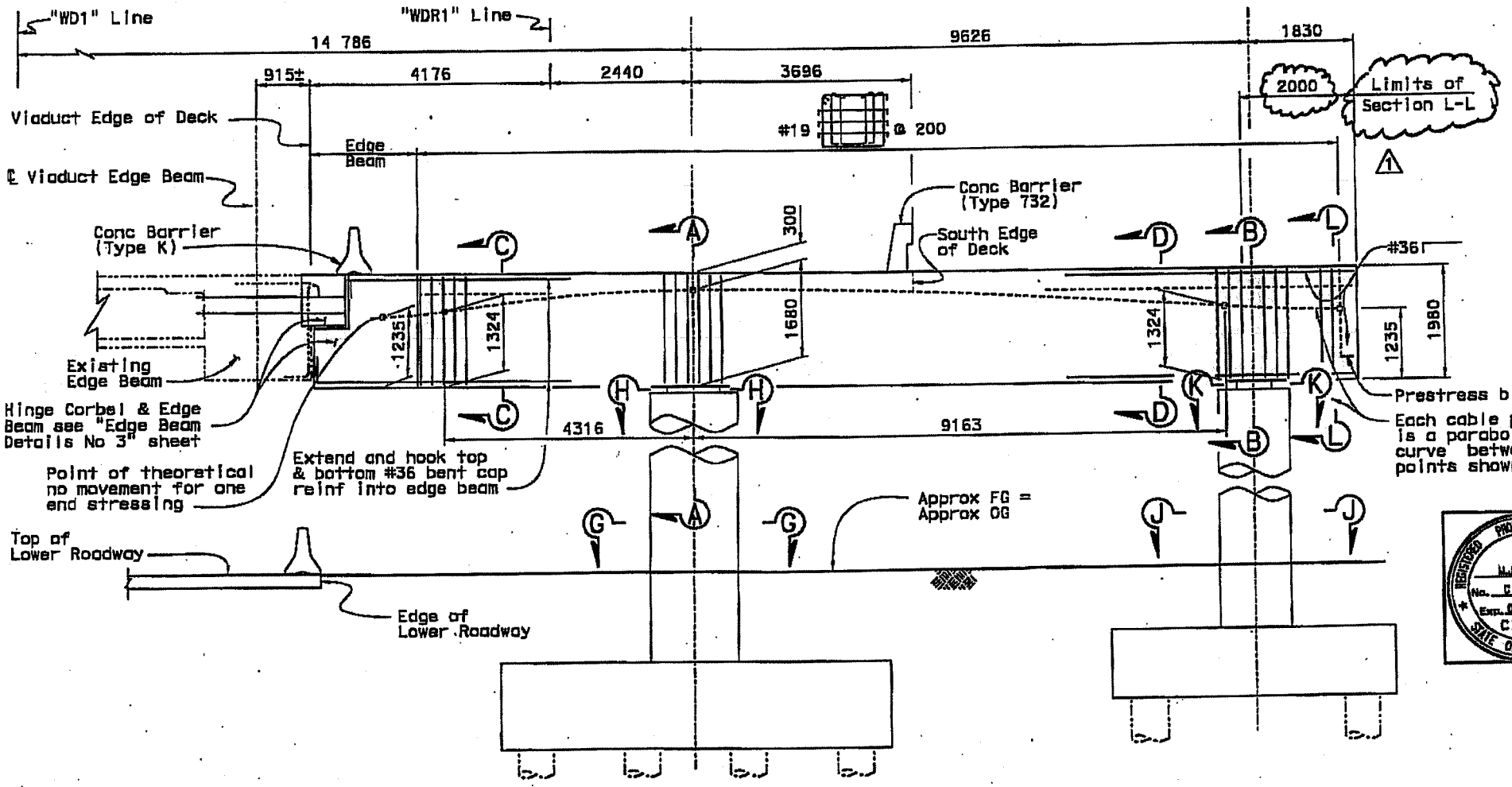

ELEVATION
1:50
STA "WDR1" 50+40.472

BENT CAP PRESTRESSING NOTES

1860 MPa Low Relaxation Strands:

Pjack	= 34 200 kN
Anchor Set	= 10 mm
Friction curvature coefficient	μ = 0.20
Friction wobble coefficient	K = 6.6 x 10^{-7}/mm

Concrete: f'c = 45.0 Mpa @ 28 days
f'ci = 30.0 Mpa @ time of stressing

Contractor shall submit elongation calculations based on initial stress at
$\boxed{x}$ = 0.930 times jacking stress

One end stressing shall be performed from Southeast end.

Notes:

1. No splices allowed in main column reinforcement.
2. For Edge Beam details, see "Edge Beam Details" sheets.
3. For Sections X-X and Z-Z see "Bent Cap Details No. 2" sheet.
4. For Sections G-G and H-H see "Column Details No. 1" sheet.
5. For Sections J-J and K-K see "Column Details No. 2" sheet.
6. For Sections A-A, B-B, C-C and D-D see "Bent Cap Details No. 1" sheet.

REGISTERED PROFESSIONAL ENGINEER M.J. Cullen No. C 40620 Exp. 03-31-09 CIVIL STATE OF CALIFORNIA

MARK	DATE	REVISION(S) DESCRIPTIONS	DES	CHK	DET
1	10-30-08	Added Section L-L	MC	CD	GS

REGISTERED CIVIL ENGINEER: DATE:

CONTRACT CHANGE ORDER NO 168
SHEET 5 OF 21

LEGEND:
-.-.-.-.- Indicates Existing Structure

NOTE:
THE CONTRACTOR SHALL VERIFY ALL CONTROLLING FIELD DIMENSIONS BEFORE ORDERING OR FABRICATING ANY MATERIAL.

Caltrans Metric

	BY	CHECKED
DESIGN	C. M. Duan	G. Schuster
DETAILS	A. Chen/G. Souza/S. Jiang	M. Cullen/G. Schuster
QUANTITIES	C. M. Duan	M. J. Cullen

ALL DIMENSIONS ARE IN MILLIMETERS UNLESS OTHERWISE SHOWN

ORIGINAL SCALE IN MILLIMETERS FOR REDUCED PLANS 0 10 20 30 40 50 60 70 80 90 100

STATE OF CALIFORNIA
DEPARTMENT OF TRANSPORTATION

DIVISION OF ENGINEERING SERVICES
STRUCTURE DESIGN
DESIGN BRANCH 5

CU 04251
EA 0120P1

BRIDGE NO. 34-0006
KILOMETER POST 12.6

DISREGARD PRINTS BEARING EARLIER REVISION DATES

REVISION DATES

SHEET 20R1 OF 64

FILE => 34-0006-h-b41a_ip_r1.dgn

STRUCTURES DESIGN DETAIL SHEET (METRIC) (REV.03-17-04)

USERNAME => QSOUZA DATE PLOTTED => 31-OCT-2008 TIME PLOTTED => 10:09

WEST TIE IN PHASE 2
SOUTH - SOUTH DETOUR
BENT 41A LAYOUT

DIST	COUNTY	ROUTE	KILOMETER POST TOTAL PROJECT	SHEET NO	TOTAL SHEETS
04	SF	80	12.6/13.2		

M. J. Cullen 10-30-08
REGISTERED CIVIL ENGINEER DATE

REGISTERED PROFESSIONAL ENGINEER — M. J. CULLEN — No. C 40620 — Exp. 03-31-09 — CIVIL — STATE OF CALIFORNIA

PLANS APPROVAL DATE

The State of California or its officers or agents shall not be responsible for the accuracy or completeness of electronic copies of this plan sheet.

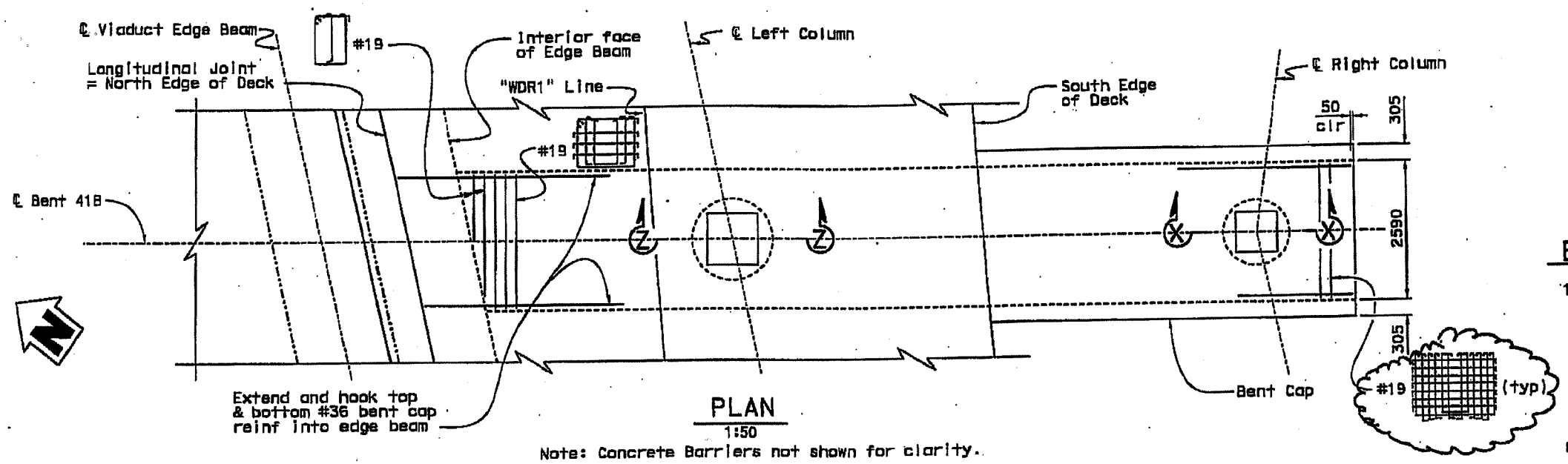

PLAN
1:50

Note: Concrete Barriers not shown for clarity.

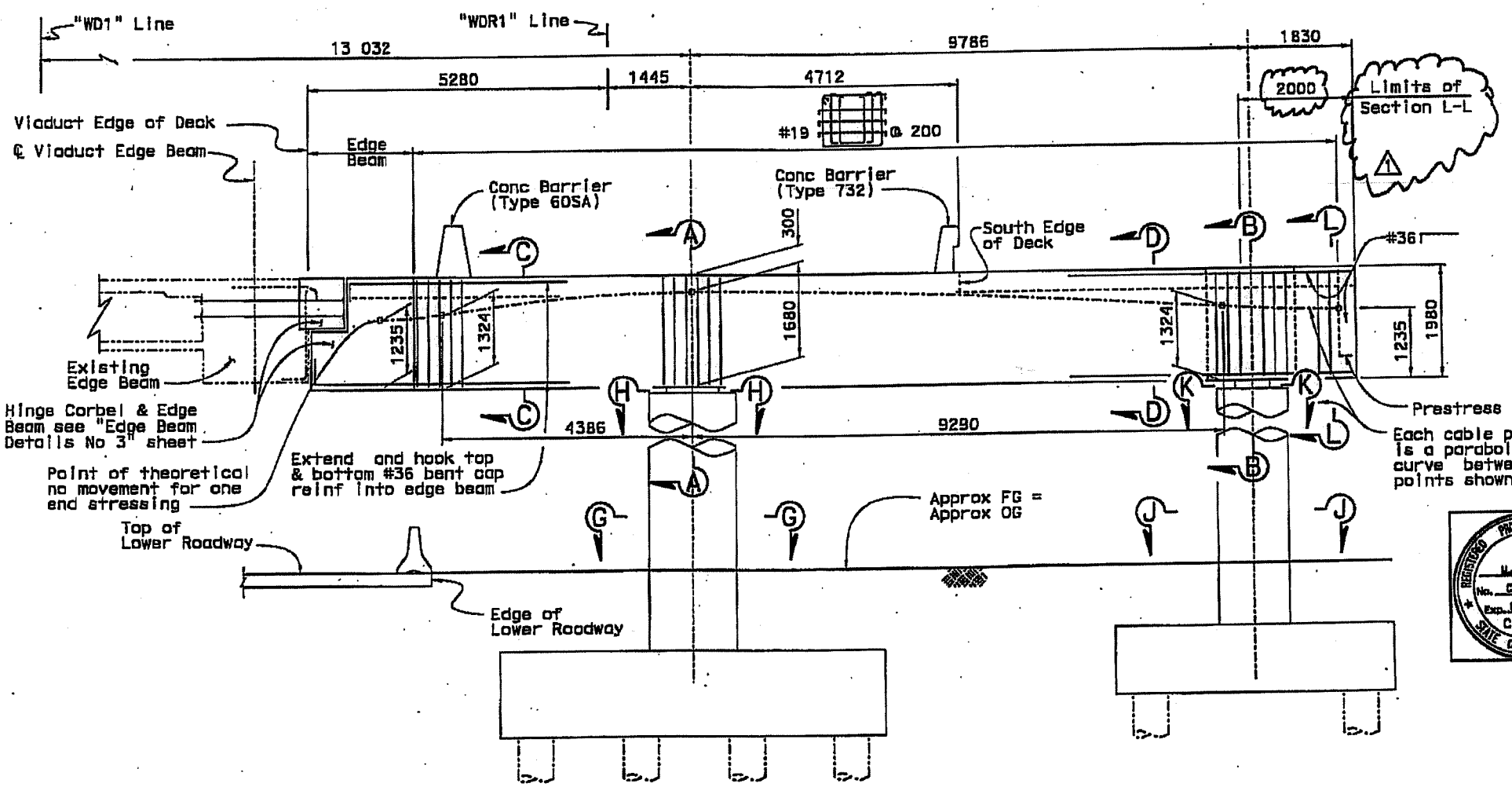

ELEVATION
1:50

STA "WDR1" 50+46.459

BENT CAP PRESTRESSING NOTES

1860 MPa Low Relaxation Strands:

Pjack	= 34 200 kN
Anchor Set	= 10 mm
Friction curvature coefficient	μ = 0.20
Friction wobble coefficient	K = 6.6 x 10^{-7}/mm

Concrete: f'c = 45.0 Mpa @ 28 days
f'ci = 30.0 Mpa @ time of stressing

Contractor shall submit elongation calculations based on initial stress at
☒ = 0.930 times jacking stress

One end stressing shall be performed from Southeast end.

Notes:

1. No splices allowed in main column reinforcement.
2. For Edge Beam details, see "Edge Beam Details" sheets.
3. For Sections X-X and Z-Z see "Bent Cap Details No. 2" sheet.
4. For Sections G-G and H-H see "Column Details No. 1" sheet.
5. For Sections J-J and K-K see "Column Details No. 2" sheet.
6. For Section A-A, B-B, C-C and D-D see "Bent Cap Details No. 1" sheet.

REGISTERED PROFESSIONAL ENGINEER — M. J. Cullen — No. C 40620 — Exp. 03-31-09 — CIVIL — STATE OF CALIFORNIA

MARK	DATE	REVISION(S) DESCRIPTIONS	DES	CHK	DET
1	10-30-08	Added Section L-L	MC	CD	GS

REGISTERED CIVIL ENGINEER: DATE:

CONTRACT CHANGE ORDER NO. 168
SHEET 6 OF 21

LEGEND:
..... Indicates Existing Structure

NOTE:
THE CONTRACTOR SHALL VERIFY ALL CONTROLLING FIELD DIMENSIONS BEFORE ORDERING OR FABRICATING ANY MATERIAL.

DESIGN	BY C. M. Duan	CHECKED G. Schuster
DETAILS	BY A. Chen/G. Souza/S. Jinag	CHECKED M. Cullen/G. Schuster
QUANTITIES	BY C. M. Duan	CHECKED M. J. Cullen

Caltrans Metric

ALL DIMENSIONS ARE IN MILLIMETERS UNLESS OTHERWISE SHOWN

ORIGINAL SCALE IN MILLIMETERS FOR REDUCED PLANS 0 10 20 30 40 50 60 70 80 90 100

STATE OF CALIFORNIA
DEPARTMENT OF TRANSPORTATION

DIVISION OF ENGINEERING SERVICES
STRUCTURE DESIGN
DESIGN BRANCH 5

CU 04251
EA 0120P1

FILE => 34-0006-h-b41b_lo_r1.dgn

BRIDGE NO. 34-0006
KILOMETER POST 12.6

DISREGARD PRINTS BEARING EARLIER REVISION DATES

REVISION DATES

WEST TIE IN PHASE 2
SOUTH - SOUTH DETOUR
BENT 41B LAYOUT

SHEET 21R1 OF 64

STRUCTURES DESIGN DETAIL SHEET (METRIC) (REV.03-17-04)

DATE PLOTTED => 31-OCT-2008 TIME PLOTTED => 10:08
USERNAME => dsouza

DIST	COUNTY	ROUTE	KILOMETER POST TOTAL PROJECT	SHEET No	TOTAL SHEETS
04	SF	80	12.6/13.2		

MJ Cullen 10-30-08
REGISTERED CIVIL ENGINEER DATE

PLANS APPROVAL DATE

The State of California or its officers or agents shall not be responsible for the accuracy or completeness of electronic copies of this plan sheet.

REGISTERED PROFESSIONAL ENGINEER M. J. CULLEN No. C 40820 Exp. 03-31-09 CIVIL STATE OF CALIFORNIA

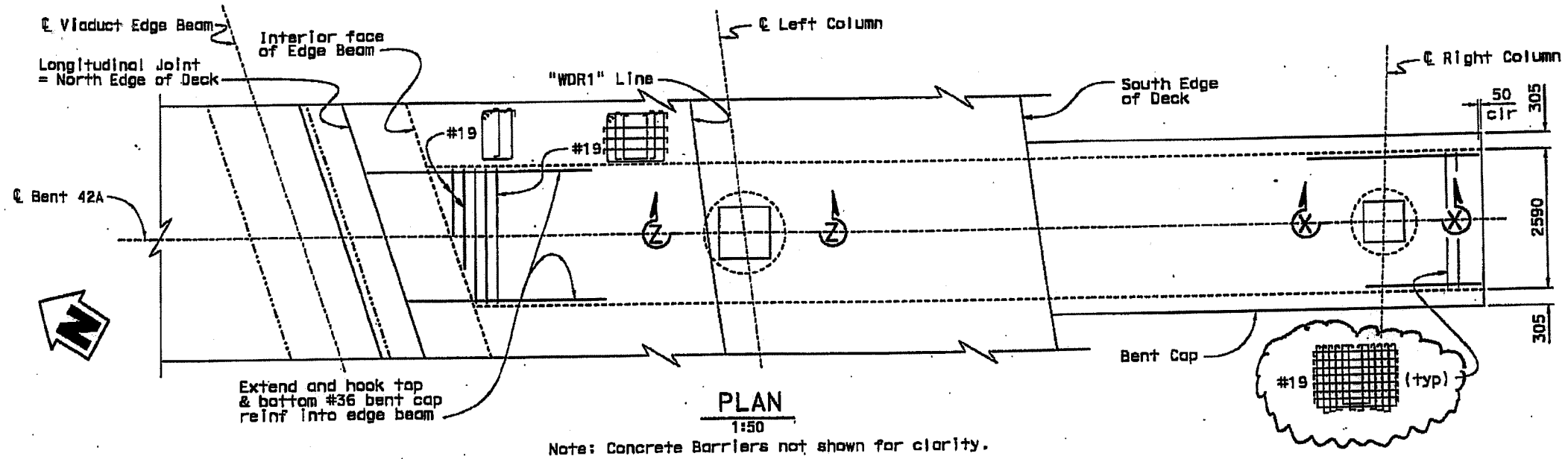

PLAN
1:50
Note: Concrete Barriers not shown for clarity.

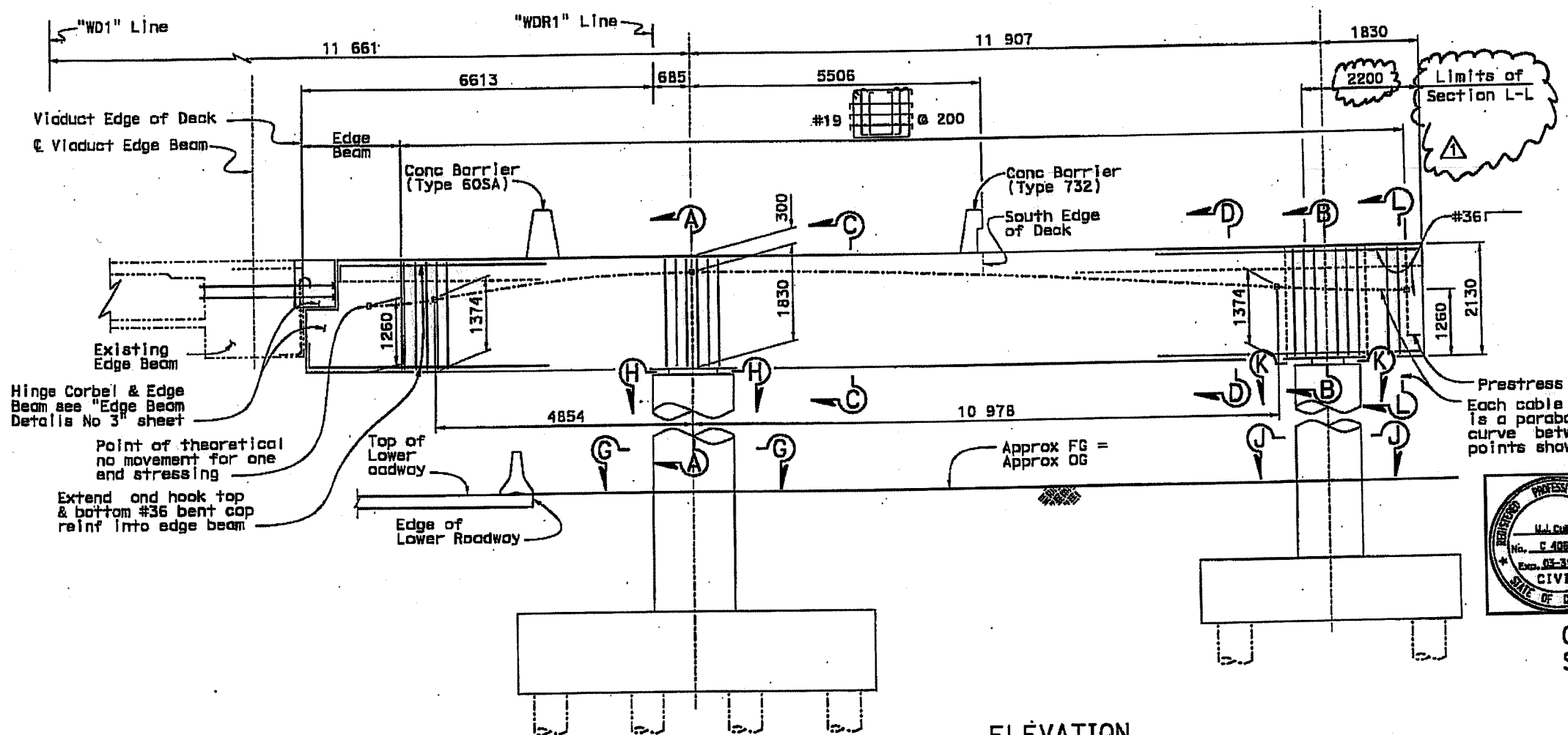

ELEVATION
1:50
STA "WDR1" 50+55.945

BENT CAP PRESTRESSING NOTES

1860 MPa Low Relaxation Strands:

Pjack	=38 250 kN
Anchor Set	= 10 mm
Friction curvature coefficient μ	= 0.20
Friction wobble coefficient K	= 6.6 x 10^{-7}/mm

Concrete: f'c = 45.0 Mpa @ 28 days
f'ci = 30.0 Mpa @ time of stressing

Contractor shall submit elongation calculations based on initial stress at
$\boxed{x}$ = 0.930 times jacking stress

One end stressing shall be performed from Southeast end.

Notes:

1. No splices allowed in main column reinforcement.
2. For Edge Beam details, see "Edge Beam Details" sheets.
3. For Sections X-X and Z-Z see "Bent Cap Details No. 2" sheet.
4. For Sections G-G and H-H see "Column Details No. 1" sheet.
5. For Sections J-J and K-K see "Column Details No. 2" sheet.
6. For Sections A-A, B-B, C-C and D-D see "Bent Cap Details No. 1" sheet.

REGISTERED PROFESSIONAL ENGINEER M.J. Cullen No. C 40820 Exp. 03-31-09 CIVIL STATE OF CALIFORNIA

MARK	DATE	REVISION(S) DESCRIPTIONS	DES	CHK	DET
1	10-30-08	Added Section L-L	MC	CD	GS

REGISTERED CIVIL ENGINEER: DATE:

CONTRACT CHANGE ORDER NO 168
SHEET 7 OF 21

LEGEND:
..... Indicates Existing Structure

NOTE:
THE CONTRACTOR SHALL VERIFY ALL CONTROLLING FIELD DIMENSIONS BEFORE ORDERING OR FABRICATING ANY MATERIAL.

WEST TIE IN PHASE 2
SOUTH - SOUTH DETOUR
BENT 42A LAYOUT

Caltrans Metric

	BY	CHECKED
DESIGN	C. M. Duan	G. Schuster
DETAILS	A. Chen/S. Jiang	M. Cullen/G. Schuster
QUANTITIES	C. M. Duan	M. J. Cullen

STATE OF CALIFORNIA
DEPARTMENT OF TRANSPORTATION

DIVISION OF ENGINEERING SERVICES
STRUCTURE DESIGN
DESIGN BRANCH 5

BRIDGE NO. 34-0006
KILOMETER POST 12.6

ALL DIMENSIONS ARE IN MILLIMETERS UNLESS OTHERWISE SHOWN

ORIGINAL SCALE IN MILLIMETERS FOR REDUCED PLANS 0 10 20 30 40 50 60 70 80 90 100

CU 04251
EA 0120P1
FILE => 34-0006-h-b42a_lo_r1.dgn

DISREGARD PRINTS BEARING EARLIER REVISION DATES

REVISION DATES

SHEET 22R1 OF 64

STRUCTURES DESIGN DETAIL SHEET (METRIC) (REV.03-17-04)

USERNAME => dsouza DATE PLOTTED => 31-OCT-2008 TIME PLOTTED => 10:09

DIST	COUNTY	ROUTE	KILOMETER POST TOTAL PROJECT	SHEET No	TOTAL SHEETS
04	SF	80	12.6/13.2		

M.J. Cullen 10-30-08
REGISTERED CIVIL ENGINEER DATE

PLANS APPROVAL DATE

The State of California or its officers or agents shall not be responsible for the accuracy or completeness of electronic copies of this plan sheet.

REGISTERED PROFESSIONAL ENGINEER — M. J. CULLEN — No. C 40620 — Exp. 03-31-09 — CIVIL — STATE OF CALIFORNIA

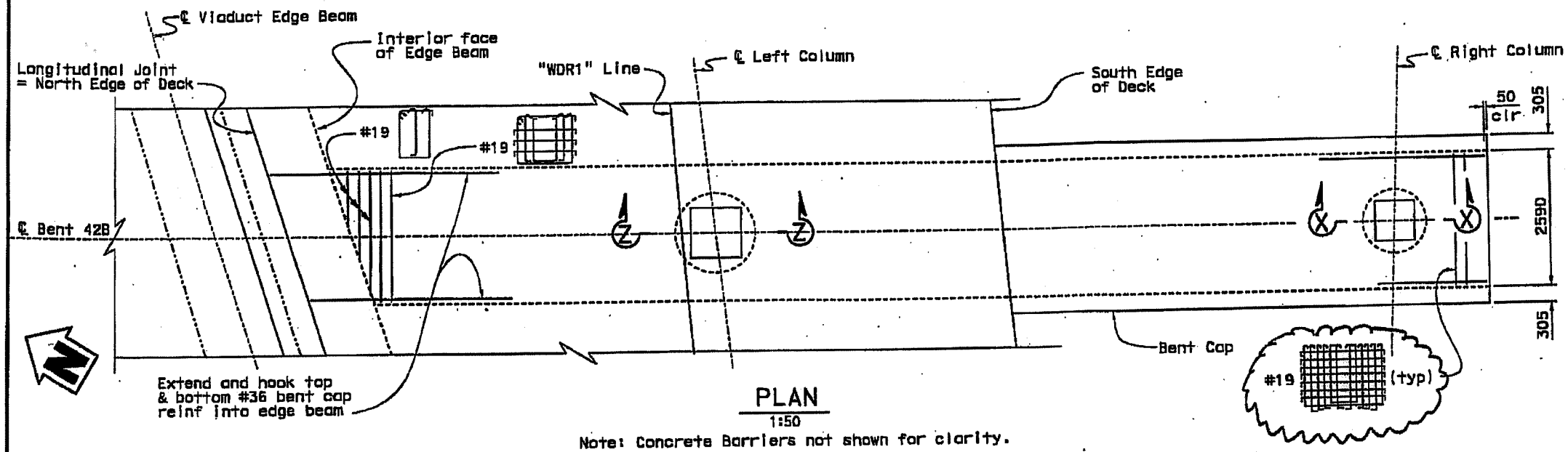

PLAN
1:50

Note: Concrete Barriers not shown for clarity.

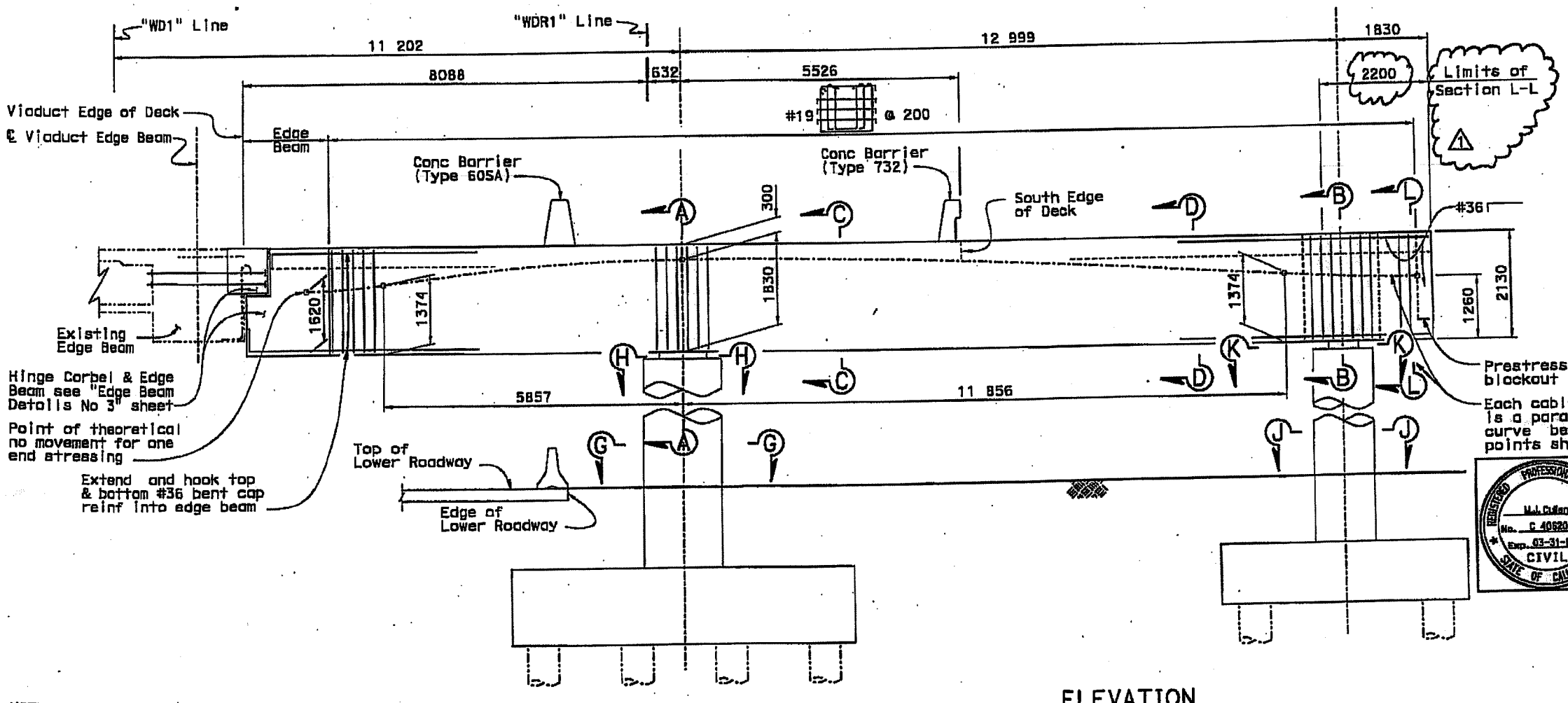

ELEVATION
1:50
STA "WDR1" 50+62.992

NOTE:
THE CONTRACTOR SHALL VERIFY ALL CONTROLLING FIELD DIMENSIONS BEFORE ORDERING OR FABRICATING ANY MATERIAL.

BENT CAP PRESTRESSING NOTES

1860 MPa Low Relaxation Strands:

Pjack	= 38 250 kN
Anchor Set	= 10 mm
Friction curvature coefficient	μ = 0.20
Friction wobble coefficient	K = 6.6 x 10^{-7}/mm

Concrete: f'c = 45.0 Mpa @ 28 days
f'ci = 30.0 Mpa @ time of stressing

Contractor shall submit elongation calculations based on initial stress at
⊠= 0.940 times jacking stress

One end stressing shall be performed from Southeast end.

Notes:

1. No splices allowed in main column reinforcement.
2. For Edge Beam details, see "Edge Beam Details" sheets.
3. For Sections X-X and Z-Z see "Bent Cap Details No. 2" sheet.
4. For Sections G-G and H-H see "Column Details No. 1" sheet.
5. For Sections J-J and K-K see "Column Details No. 2" sheet.
6. For Sections A-A, B-B, C-C and D-D see "Bent Cap Details No. 1" sheet.

REGISTERED PROFESSIONAL ENGINEER — M.J. Cullen — No. C 40620 — Exp. 03-31-09 — CIVIL — STATE OF CALIFORNIA

MARK	DATE	REVISION(S) DESCRIPTIONS	DES	CHK	DET
1	10-30-08	Added Section L-L	MC	CD	GS

REGISTERED CIVIL ENGINEER: DATE:

CONTRACT CHANGE ORDER NC 168
SHEET 8 OF 21

LEGEND:
---------- Indicates Existing Structure

DESIGN	BY C. M. Duan	CHECKED G. Schuster	
DETAILS	BY A. Chen\S. diag	CHECKED M. Cullen/G. Schuster	
QUANTITIES	BY C. M. Duan	CHECKED M. J. Cullen	

Caltrans Metric

ALL DIMENSIONS ARE IN MILLIMETERS UNLESS OTHERWISE SHOWN

ORIGINAL SCALE IN MILLIMETERS FOR REDUCED PLANS 0 10 20 30 40 50 60 70 80 90 100

STATE OF CALIFORNIA
DEPARTMENT OF TRANSPORTATION

DIVISION OF ENGINEERING SERVICES
STRUCTURE DESIGN
DESIGN BRANCH 5

CU 04251
EA 0120P1
FILE => 34-0006-h-042b_le_r1.dgn

BRIDGE NO. 34-0006
KILOMETER POST 12.6

WEST TIE IN PHASE 2
SOUTH - SOUTH DETOUR
BENT 42B LAYOUT

DISREGARD PRINTS BEARING EARLIER REVISION DATES

REVISION DATES: 2-15-07 | 8-31-07 | 10-30-08 | 11-13-07 | 12-06-07 | 1-04-08 | 2-15-08 | 10-30-08

SHEET 23R1 OF 64

STRUCTURES DESIGN DETAIL SHEET (METRIC) (REV.03-17-04)

USERNAME => DBOLZO DATE PLOTTED => 31-OCT-2008 TIME PLOTTED => 10:09

DIST	COUNTY	ROUTE	KILOMETER POST TOTAL PROJECT	SHEET No	TOTAL SHEETS
04	SF	80	12.6/13.2		

M.J. Cullen 10-30-08
REGISTERED CIVIL ENGINEER DATE

PLANS APPROVAL DATE

The State of California or its officers or agents shall not be responsible for the accuracy or completeness of electronic copies of this plan sheet.

REGISTERED PROFESSIONAL ENGINEER M. J. CULLEN No. C 40620 Exp. 03-31-09 CIVIL STATE OF CALIFORNIA

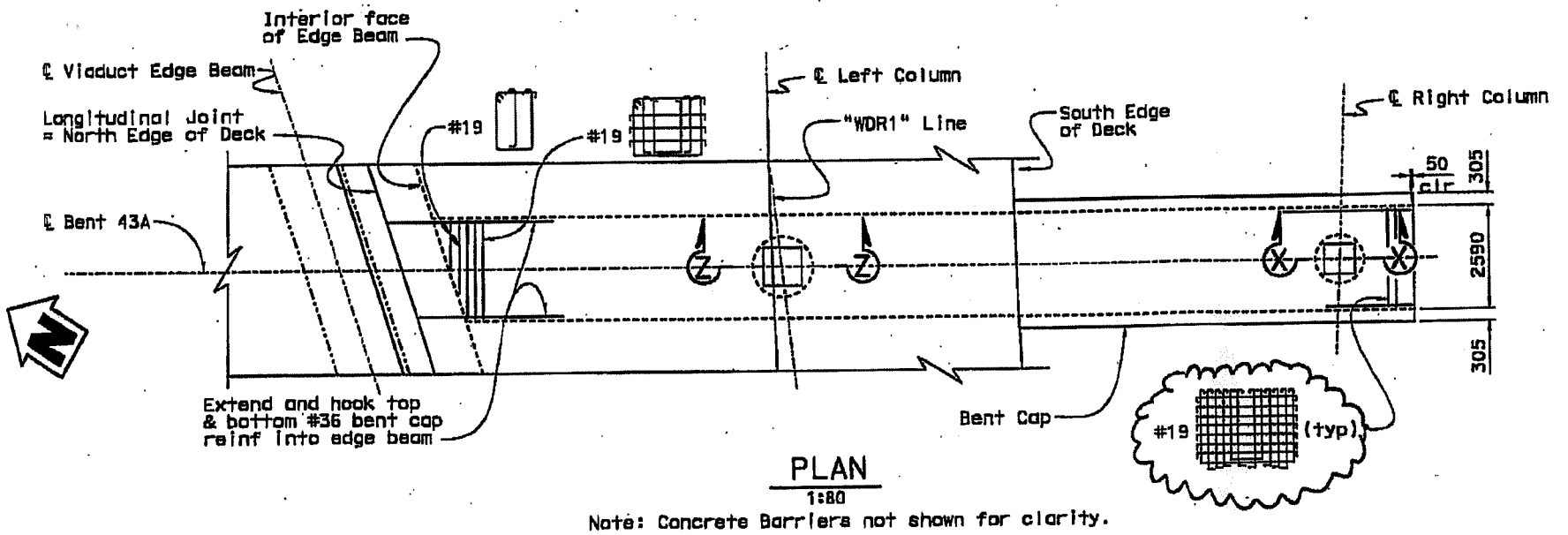

PLAN
1:80

Note: Concrete Barriers not shown for clarity.

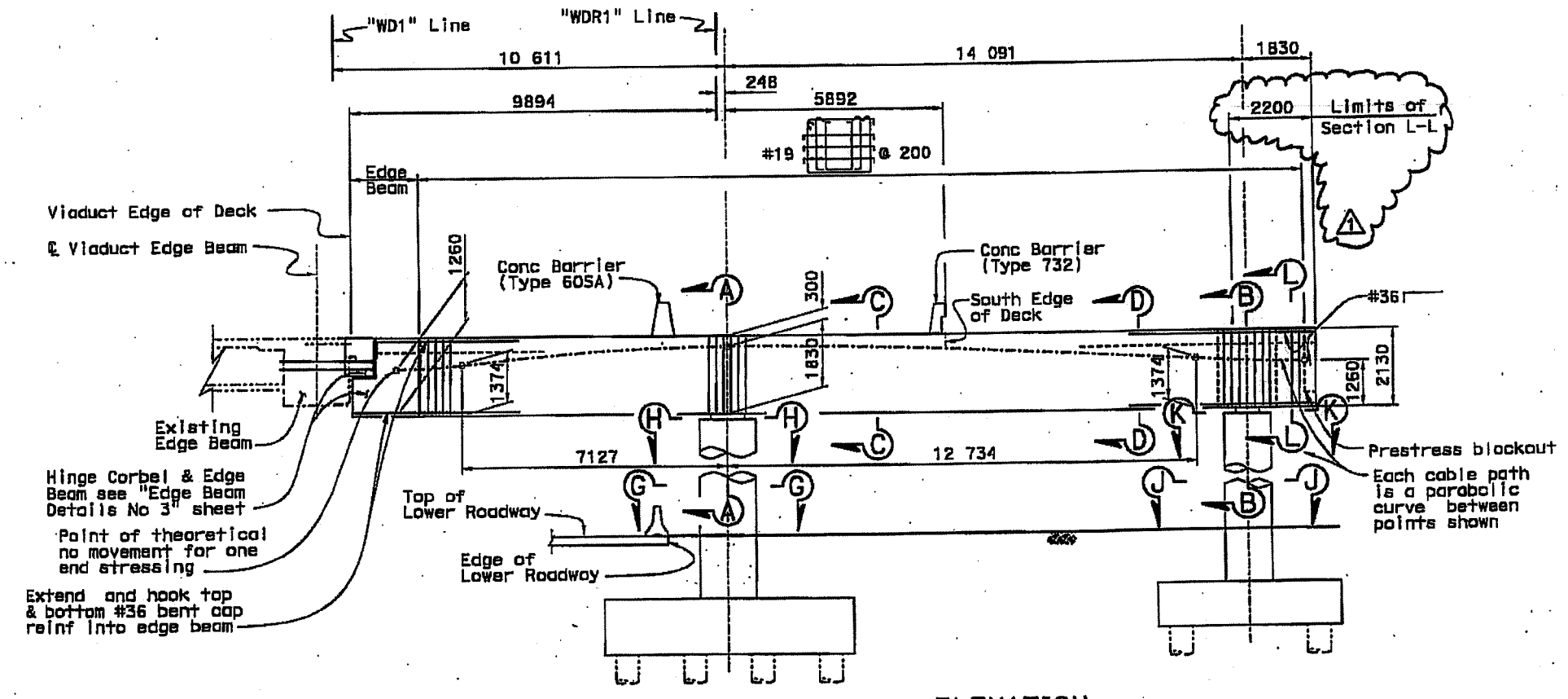

ELEVATION
1:80
STA "WDR1" 50+70.008

NOTE:
THE CONTRACTOR SHALL VERIFY ALL CONTROLLING FIELD DIMENSIONS BEFORE ORDERING OR FABRICATING ANY MATERIAL.

BENT CAP PRESTRESSING NOTES

1860 MPa Low Relaxation Strands:

Pjack	= 38 250 kN
Anchor Set	= 10 mm
Friction curvature coefficient	μ = 0.20
Friction wobble coefficient	K = 6.6 x 10^{-7}/mm

Concrete: f'c = 45.0 Mpa @ 28 days
f'ci = 30.0 Mpa @ time of stressing

Contractor shall submit elongation calculations based on initial stress at
☒ = 0.940 times jacking stress

One end stressing shall be performed from Southeast end.

Notes:

1. No splices allowed in main column reinforcement.
2. For Edge Beam details, see "Edge Beam Details" sheets.
3. For Sections X-X and Z-Z see "Bent Cap Details No. 2" sheet.
4. For Sections G-G and H-H see "Column Details No. 1" sheet.
5. For Sections J-J and K-K see "Column Details No. 2" sheet.
6. For Sections A-A, B-B, C-C and D-D see "Bent Cap Details No. 1" sheet.

REGISTERED PROFESSIONAL ENGINEER M.J. Cullen No. C 40620 Exp. 03-31-09 CIVIL STATE OF CALIFORNIA

MARK	DATE	REVISION(S) DESCRIPTIONS	DES	CHK	DET
1	10-30-08	Added Section L-L	MC	CD	GS

REGISTERED CIVIL ENGINEER: DATE:

CONTRACT CHANGE ORDER 168
SHEET 9 OF 21

LEGEND:

..... Indicates Existing Structure

DESIGN	BY C. M. Duan	CHECKED G. Schuster	
DETAILS	BY A. Chen\S. Jiang	CHECKED M. Cullen/G. Schuster	
QUANTITIES	BY C. M. Duan	CHECKED M. J. Cullen	

STATE OF CALIFORNIA
DEPARTMENT OF TRANSPORTATION

DIVISION OF ENGINEERING SERVICES
STRUCTURE DESIGN
DESIGN BRANCH 5

BRIDGE NO. 34-0006
KILOMETER POST 12.6

CU 04251
EA 0120P1

FILE => 34-0006-h-b43a_lo_r1.dgn

ALL DIMENSIONS ARE IN MILLIMETERS UNLESS OTHERWISE SHOWN

ORIGINAL SCALE IN MILLIMETERS FOR REDUCED PLANS 0 10 20 30 40 50 60 70 80 90 100

WEST TIE IN PHASE 2
SOUTH - SOUTH DETOUR
BENT 43A LAYOUT

DISREGARD PRINTS BEARING EARLIER REVISION DATES

REVISION DATES: 8-04-08 | 8-27-08 | 9-25-08 | 10-06-08 | 10-16-08 | 10-30-08

SHEET 24R1 OF 64

STRUCTURES DESIGN DETAIL SHEET (METRIC) (REV.03-17-04)

USERNAME => dgeiger DATE PLOTTED => 31-OCT-2008 TIME PLOTTED => 10:09

DIST	COUNTY	ROUTE	KILOMETER POST TOTAL PROJECT	SHEET No	TOTAL SHEETS
04	SF	80	12.6/13.2		

REGISTERED CIVIL ENGINEER 10-30-08 DATE

PLANS APPROVAL DATE

The State of California or its officers or agents shall not be responsible for the accuracy or completeness of electronic copies of this plan sheet.

REGISTERED PROFESSIONAL ENGINEER M. J. CULLEN No. C 48620 Exp. 03-31-09 CIVIL STATE OF CALIFORNIA

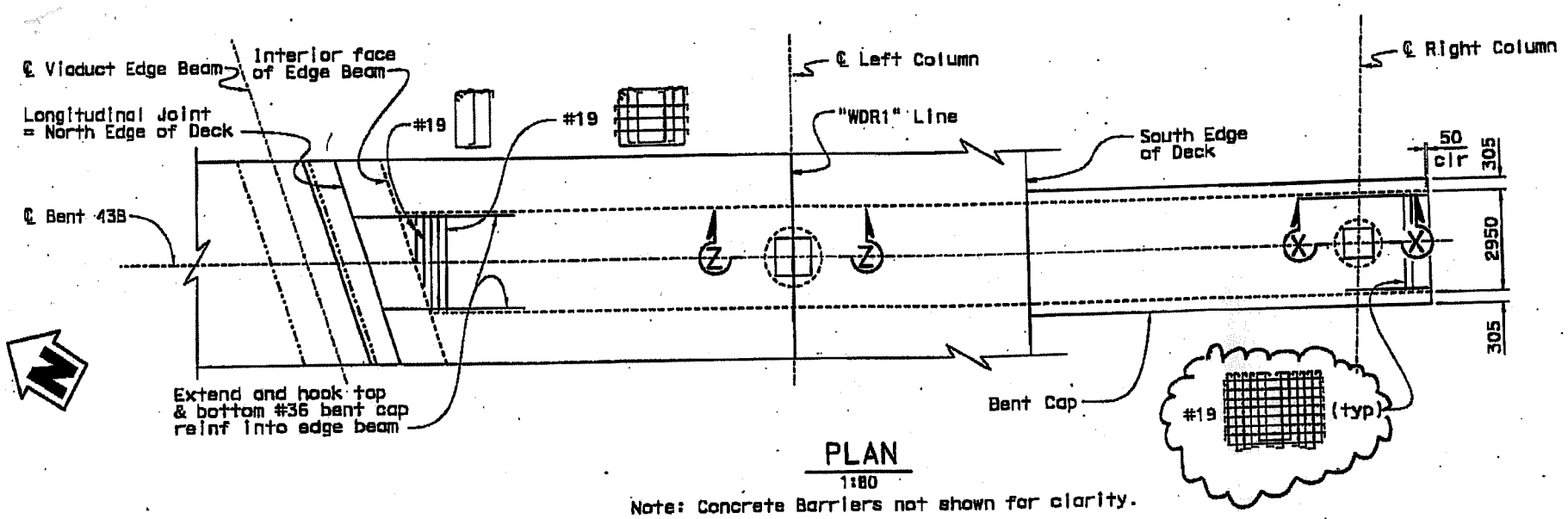

PLAN
1:80
Note: Concrete Barriers not shown for clarity.

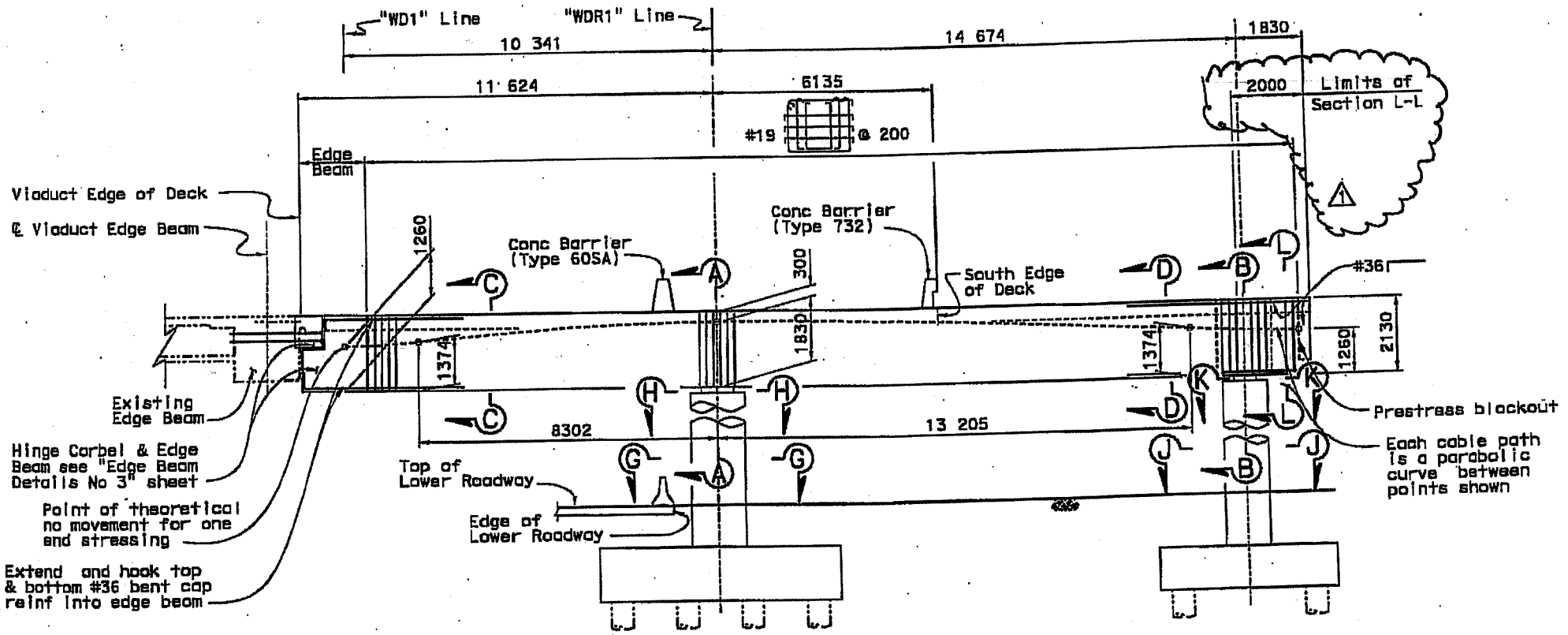

ELEVATION
1:80
STA "WDR1" 50+75.636

BENT CAP PRESTRESSING NOTES

1860 MPa Low Relaxation Strands:

Pjack = 38 250 kN
Anchor Set = 10 mm
Friction curvature coefficient μ = 0.20
Friction wobble coefficient K = 6.6 x 10^{-7}/mm

Concrete: f'c = 45.0 Mpa @ 28 days
f'ci = 30.0 Mpa @ time of stressing

Contractor shall submit elongation calculations based on initial stress at
$\boxed{x}$ = 0.940 times jacking stress

One end stressing shall be performed from Southeast end.

Notes:

1. No splices allowed in main column reinforcement.
2. For Edge Beam details, see "Edge Beam Details" sheets.
3. For Sections X-X and Z-Z see "Bent Cap Details No. 2" sheet.
4. For Sections G-G and H-H see "Column Details No. 1" sheet.
5. For Sections J-J and K-K see "Column Details No. 2" sheet.
6. For Sections A-A, B-B, C-C and D-D see "Bent Cap Details No. 1" sheet.

REGISTERED PROFESSIONAL ENGINEER M.J. Cullen No. C 40620 Exp. 03-31-09 CIVIL STATE OF CALIFORNIA

MARK	DATE	REVISION(S) DESCRIPTIONS	DES	CHK	DET
1	10-30-08	Added Section L-L	MC	CD	GS

REGISTERED CIVIL ENGINEER: DATE:

CONTRACT CHANGE ORDER NO. 168
SHEET 10 OF 21

LEGEND:
..... Indicates Existing Structure

NOTE:
THE CONTRACTOR SHALL VERIFY ALL CONTROLLING FIELD DIMENSIONS BEFORE ORDERING OR FABRICATING ANY MATERIAL.

WEST TIE IN PHASE 2
SOUTH - SOUTH DETOUR
BENT 43B LAYOUT

Caltrans Metric

	BY	CHECKED
DESIGN	C. M. Duan	G. Schuster
DETAILS	A. Chen\S.Jiang	M. Cullen/G. Schuster
QUANTITIES	C. M. Duan	M. J. Cullen

STATE OF CALIFORNIA
DEPARTMENT OF TRANSPORTATION

DIVISION OF ENGINEERING SERVICES
STRUCTURE DESIGN
DESIGN BRANCH 5

BRIDGE NO. 34-0006
KILOMETER POST 12.6

CU 04251
EA 0120P1
FILE => 34-0006-h-b43b_lo_r1.dgn

DISREGARD PRINTS BEARING EARLIER REVISION DATES

REVISION DATES

SHEET 25R1 OF 64

STRUCTURES DESIGN DETAIL SHEET (METRIC) (REV.03-17-04)

ALL DIMENSIONS ARE IN MILLIMETERS UNLESS OTHERWISE SHOWN

ORIGINAL SCALE IN MILLIMETERS FOR REDUCED PLANS 0 10 20 30 40 50 60 70 80 90 100

USERNAME => QSDUZO DATE PLOTTED => 31-OCT-2008 TIME PLOTTED => 10:09

DIST	COUNTY	ROUTE	KILOMETER POST TOTAL PROJECT	SHEET No	TOTAL SHEETS
04	SF	80	12.6/13.2		

MJ Cullen 10-30-08
REGISTERED CIVIL ENGINEER DATE

PLANS APPROVAL DATE

The State of California or its officers or agents shall not be responsible for the accuracy or completeness of electronic copies of this plan sheet.

REGISTERED PROFESSIONAL ENGINEER M. J. CULLEN No. C 40620 Exp. 03-31-09 CIVIL STATE OF CALIFORNIA

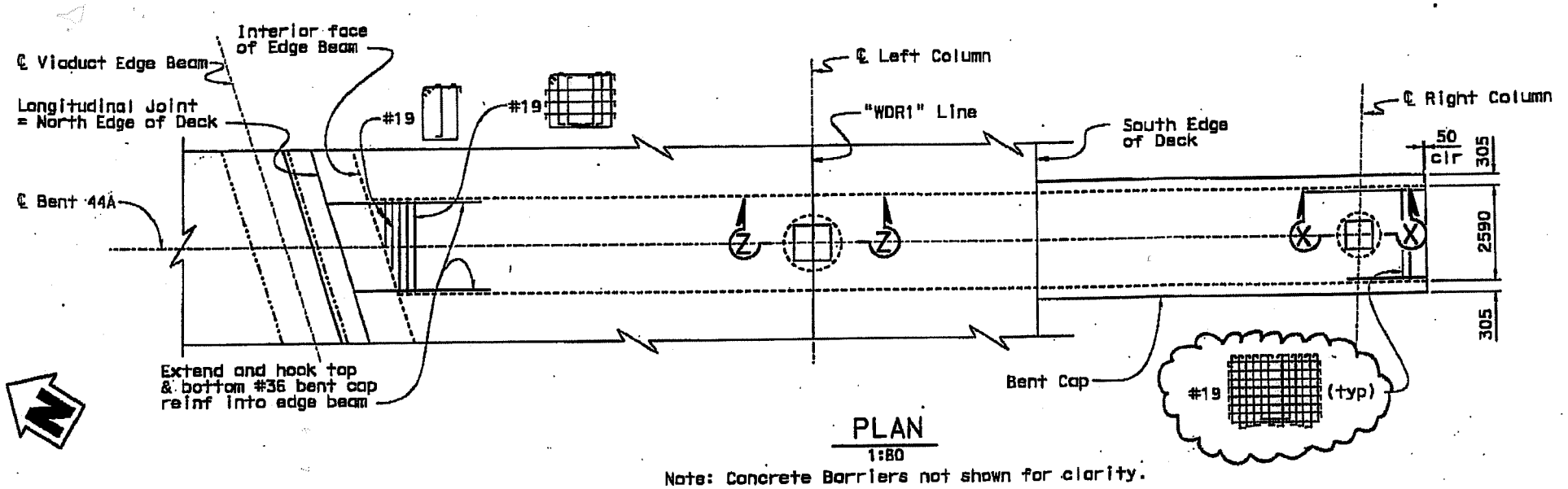

PLAN
1:80
Note: Concrete Barriers not shown for clarity.

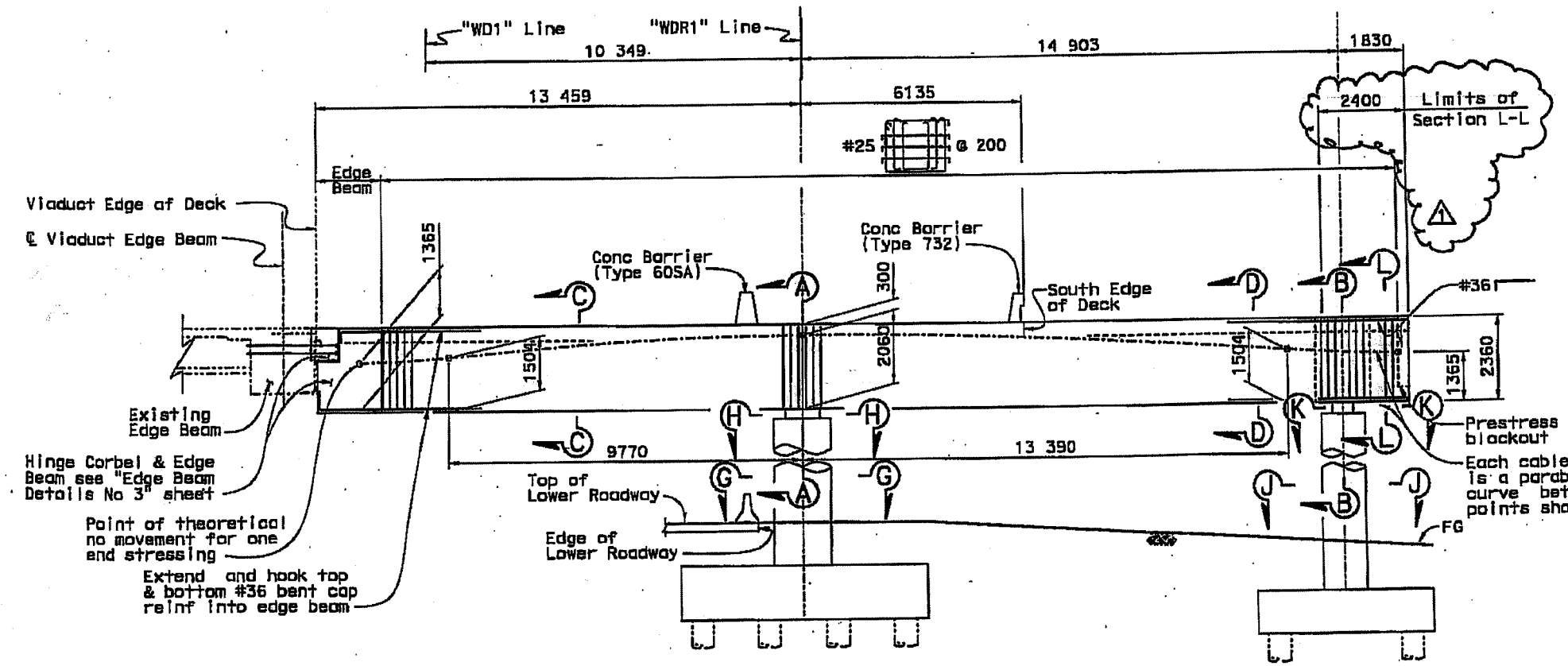

ELEVATION
1:80
STA "WDR1" 50+81.521

BENT CAP PRESTRESSING NOTES

1860 MPa Low Relaxation Strands:

Pjack	=	45 450 kN
Anchor Set	=	10 mm
Friction curvature coefficient	μ =	0.20
Friction wobble coefficient	K =	6.6×10^{-7}/mm

Concrete: f'c = 45.0 Mpa @ 28 days
f'ci = 30.0 Mpa @ time of stressing

Contractor shall submit elongation calculations based on initial stress at
$\boxed{x}$ = 0.920 times jacking stress

One end stressing shall be performed from Southeast end.

Notes:

1. No splices allowed in main column reinforcement.
2. For Edge Beam details, see "Edge Beam Details" sheets.
3. For Sections X-X and Z-Z see "Bent Cap Details No. 2" sheet.
4. For Sections G-G and H-H see "Column Details No. 1" sheet.
5. For Sections J-J and K-K see "Column Details No. 2" sheet.
6. For Sections A-A, B-B, C-C and D-D see "Bent Cap Details No. 1" sheet.

REGISTERED PROFESSIONAL ENGINEER M.J. Cullen No. C 40620 Exp. 03-31-09 CIVIL STATE OF CALIFORNIA

MARK	DATE	REVISION(S) DESCRIPTIONS	DES	CHK	DET
1	10-30-08	Added Section L-L	MC	CD	GS

REGISTERED CIVIL ENGINEER: DATE:

CONTRACT CHANGE ORDER NO. 168
SHEET 11 OF 21

LEGEND:
-.-.-.- Indicates Existing Structure

NOTE:
THE CONTRACTOR SHALL VERIFY ALL CONTROLLING FIELD DIMENSIONS BEFORE ORDERING OR FABRICATING ANY MATERIAL.

Caltrans Metric

	BY	CHECKED
DESIGN	C. M. Duan	G. Schuster
DETAILS	A. Chen/S. Jiang	M. Cullen/G. Schuster
QUANTITIES	C. M. Duan	M. J. Cullen

ALL DIMENSIONS ARE IN MILLIMETERS UNLESS OTHERWISE SHOWN

ORIGINAL SCALE IN MILLIMETERS FOR REDUCED PLANS 0 10 20 30 40 50 60 70 80 90 100

STATE OF CALIFORNIA
DEPARTMENT OF TRANSPORTATION

DIVISION OF ENGINEERING SERVICES
STRUCTURE DESIGN
DESIGN BRANCH 5

CU 04251
EA 0120P1

BRIDGE NO. 34-0006
KILOMETER POST 12.6

DISREGARD PRINTS BEARING EARLIER REVISION DATES

REVISION DATES

FILE => 34-0006-h-b44a_la_r1.dgn

WEST TIE IN PHASE 2
SOUTH - SOUTH DETOUR
BENT 44A LAYOUT

SHEET 26R1 OF 64

STRUCTURES DESIGN DETAIL SHEET (METRIC) (REV.03-17-04)

USERNAME => DSOUZO DATE PLOTTED => 31-OCT-2008 TIME PLOTTED => 10:09

DIST	COUNTY	ROUTE	KILOMETER POST TOTAL PROJECT	SHEET No	TOTAL SHEETS
04	SF	80	12.6/13.2		

REGISTERED CIVIL ENGINEER 10-30-08 DATE

PLANS APPROVAL DATE

The State of California or its officers or agents shall not be responsible for the accuracy or completeness of electronic copies of this plan sheet.

REGISTERED PROFESSIONAL ENGINEER M. J. CULLEN No. C 40620 Exp. 03-31-09 CIVIL STATE OF CALIFORNIA

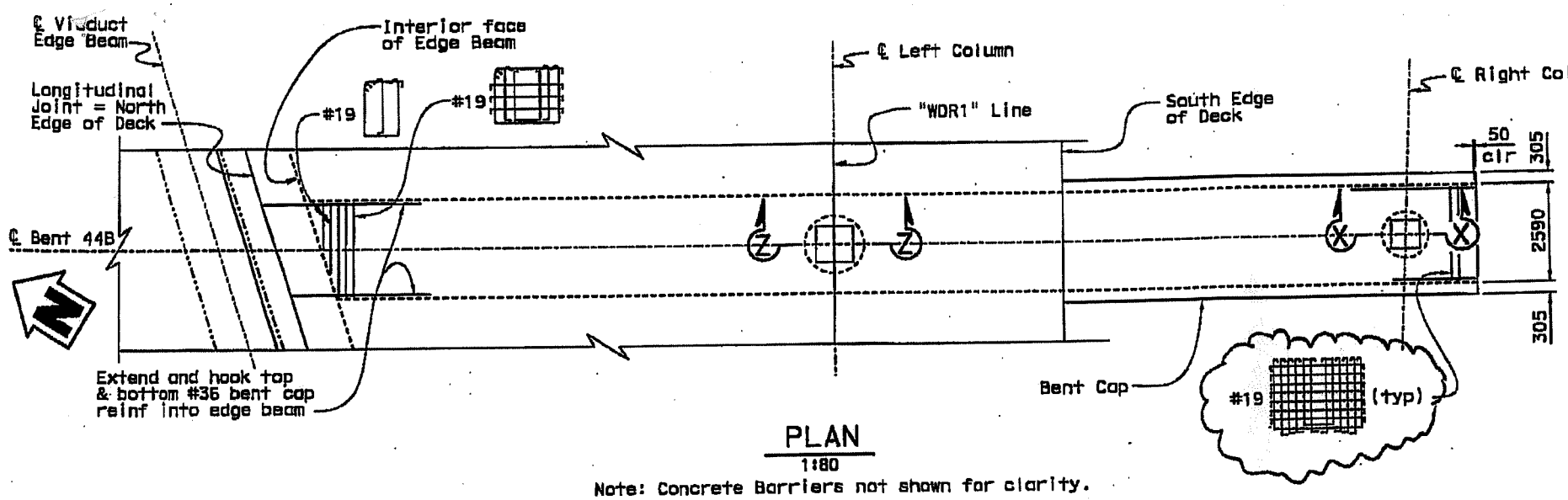

PLAN
1:80
Note: Concrete Barriers not shown for clarity.

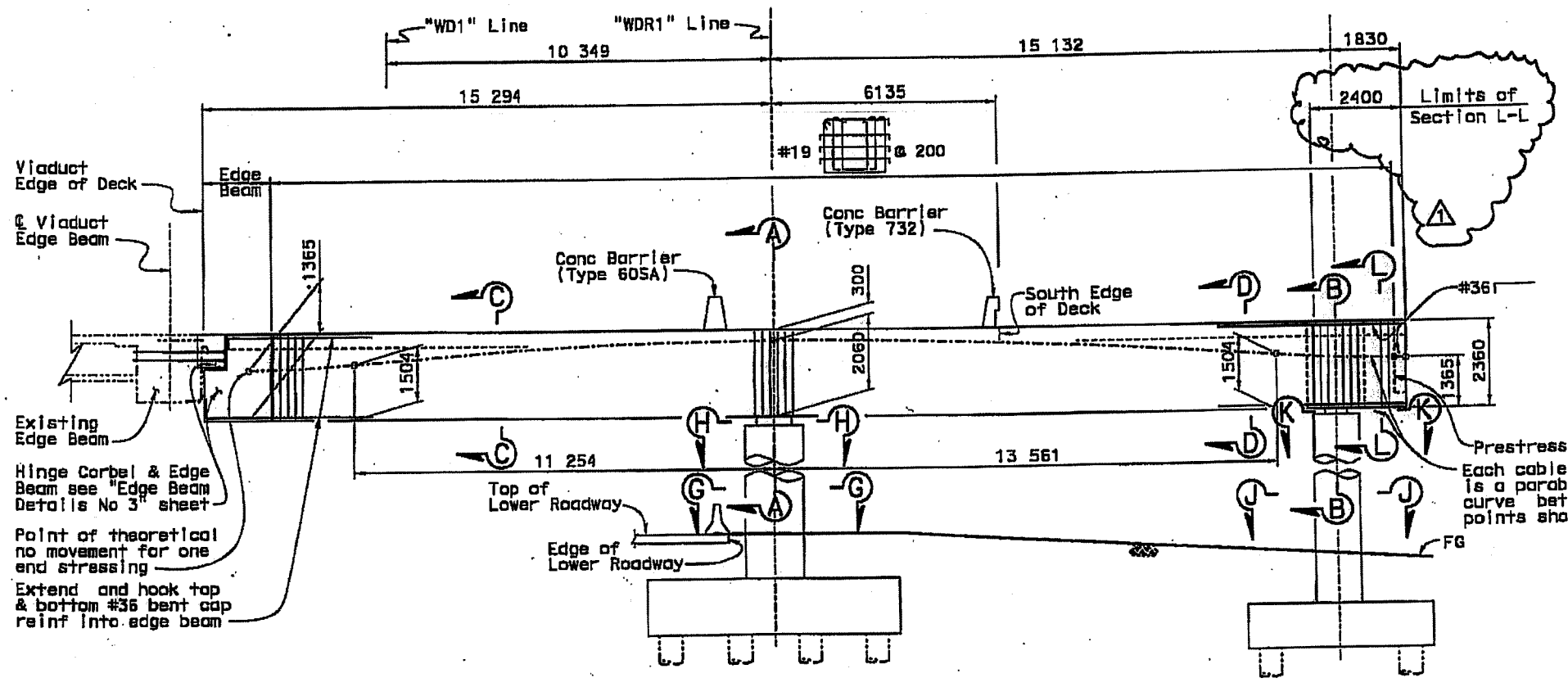

ELEVATION
1:80
STA "WDR1" 50+87.268

BENT CAP PRESTRESSING NOTES

1860 MPa Low Relaxation Strands:

Pjack	= 45 450 kN
Anchor Set	= 10 mm
Friction curvature coefficient	μ = 0.20
Friction wobble coefficient	K = 6.6 x 10^{-7}/mm

Concrete: f'c = 45.0 Mpa @ 28 days
f'ci = 30.0 Mpa @ time of stressing

Contractor shall submit elongation calculations based on initial stress at
$\boxed{x}$ = 0.940 times jacking stress

One end stressing shall be performed from Southeast end.

Notes:

1. No splices allowed in main column reinforcement.
2. For Edge Beam details, see "Edge Beam Details" sheets.
3. For Sections X-X and Z-Z see "Bent Cap Details No. 2" sheet.
4. For Sections G-G and H-H see "Column Details No. 1" sheet.
5. For Sections J-J and K-K see "Column Details No. 2" sheet.
6. For Sections A-A, B-B, C-C and D-D see "Bent Cap Details No. 1" sheet.

REGISTERED PROFESSIONAL ENGINEER M.J. Cullen No. C 40620 Exp. 03-31-09 CIVIL STATE OF CALIFORNIA

MARK	DATE	REVISION(S) DESCRIPTIONS	DES	CHK	DET
1	10-30-08	Added Section L-L	MC	CD	GS

REGISTERED CIVIL ENGINEER: DATE:

CONTRACT CHANGE ORDER NO. 168
SHEET 12 OF 21

LEGEND:
-.-.-.- Indicates Existing Structure

NOTE:
THE CONTRACTOR SHALL VERIFY ALL CONTROLLING FIELD DIMENSIONS BEFORE ORDERING OR FABRICATING ANY MATERIAL.

Caltrans Metric

	BY	CHECKED
DESIGN	C. M. Duan	G. Schuster
DETAILS	A. Chen/S. Jiang	M. Cullen/G. Schuster
QUANTITIES	C. M. Duan	M. J. Cullen

ALL DIMENSIONS ARE IN MILLIMETERS UNLESS OTHERWISE SHOWN

ORIGINAL SCALE IN MILLIMETERS FOR REDUCED PLANS 0 10 20 30 40 50 60 70 80 90 100

STATE OF CALIFORNIA
DEPARTMENT OF TRANSPORTATION

DIVISION OF ENGINEERING SERVICES
STRUCTURE DESIGN
DESIGN BRANCH 5

CU 04251
EA 0120P1

BRIDGE NO. 34-0006
KILOMETER POST 12.6

DISREGARD PRINTS BEARING EARLIER REVISION DATES

FILE => 34-0006-h-b44b_lp_r1.dgn

WEST TIE IN PHASE 2
SOUTH - SOUTH DETOUR
BENT 44B LAYOUT

REVISION DATES 10-30-08

SHEET 27R1 OF 64

STRUCTURES DESIGN DETAIL SHEET (METRIC) (REV.03-17-04)

USERNAME => gsouza DATE PLOTTED => 31-OCT-2008 TIME PLOTTED => 10:09

DIST	COUNTY	ROUTE	KILOMETER POST TOTAL PROJECT	SHEET No	TOTAL SHEETS
04	SF	80	12.6/13.2		

REGISTERED CIVIL ENGINEER 10-30-08 DATE

PLANS APPROVAL DATE

The State of California or its officers or agents shall not be responsible for the accuracy or completeness of electronic copies of this plan sheet.

REGISTERED PROFESSIONAL ENGINEER M. J. CULLEN No. C 40620 Exp. 03-31-09 CIVIL STATE OF CALIFORNIA

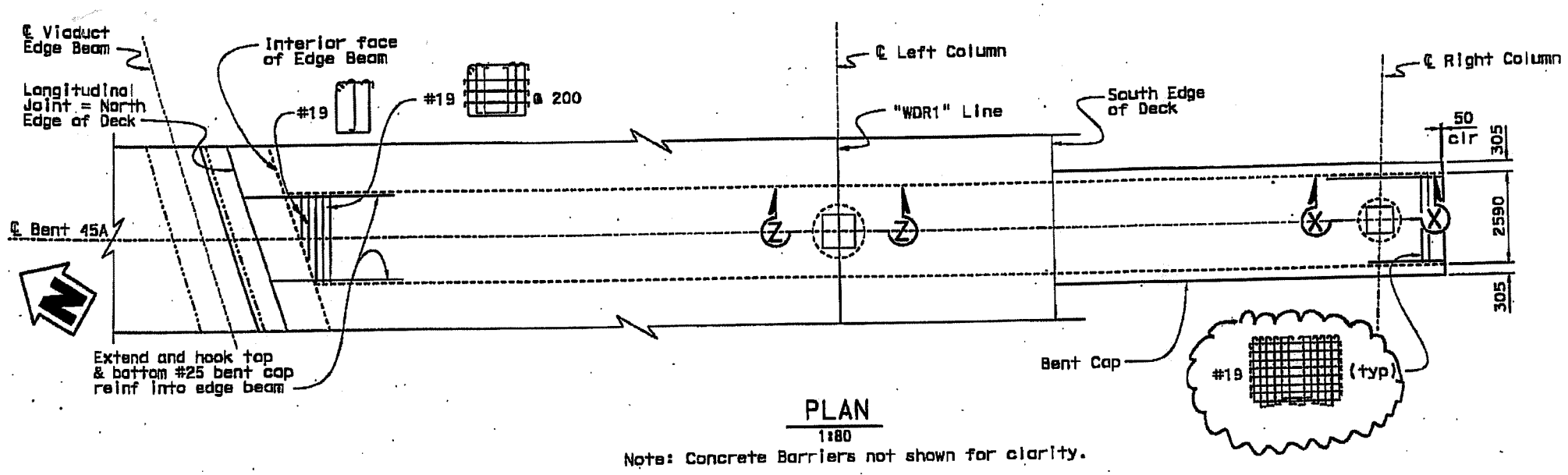

PLAN
1:80
Note: Concrete Barriers not shown for clarity.

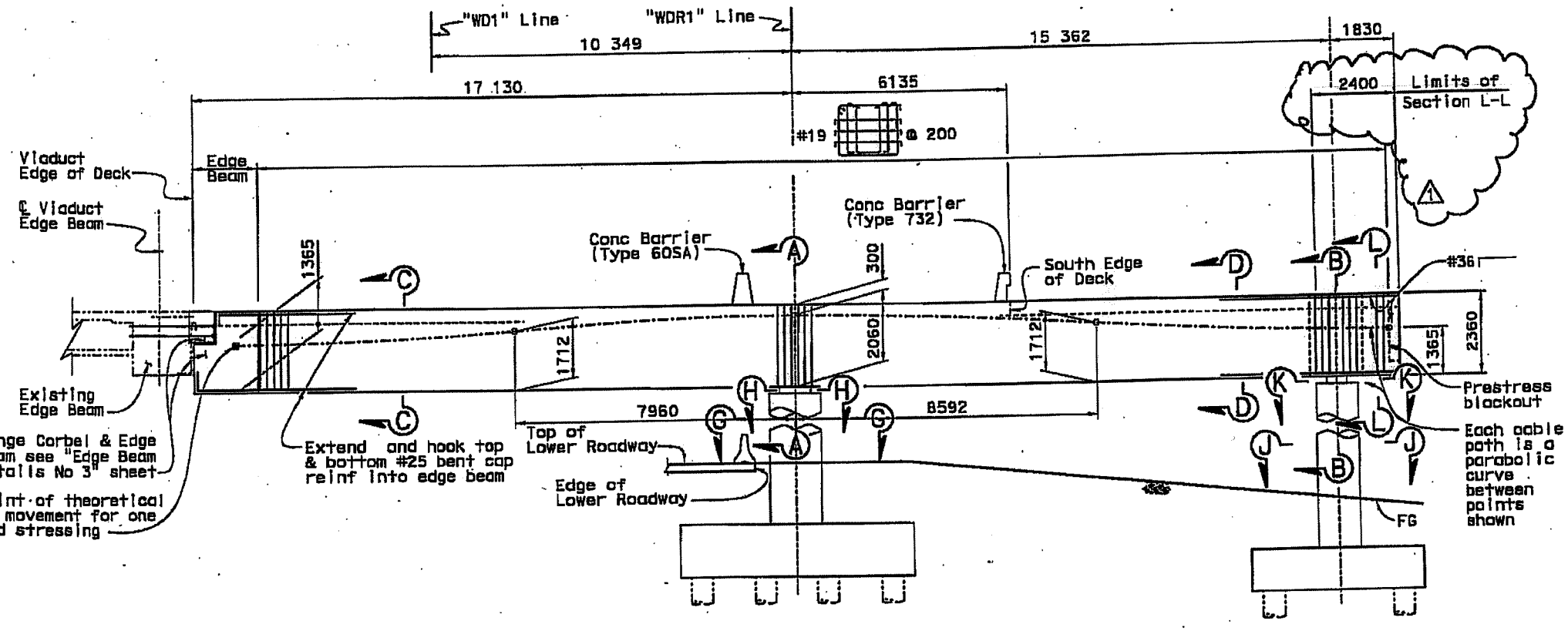

ELEVATION
1:80
STA "WDR1" 50+93.019

BENT CAP PRESTRESSING NOTES

1860 MPa Low Relaxation Strands:

Pjack	= 45 450 kN
Anchor Set	= 10 mm
Friction curvature coefficient μ	= 0.20
Friction wobble coefficient	= 6.6×10^{-7}/mm

Concrete: f'c = 45.0 Mpa @ 28 days
f'ci = 30.0 Mpa @ time of stressing

Contractor shall submit elongation calculations based on initial stress at
$\boxed{x}$ = 0.940 times jacking stress

One end stressing shall be performed from Southeast end.

Notes:

1. No splices allowed in main column reinforcement.
2. For Edge Beam details, see "Edge Beam Details" sheets.
3. For Sections X-X and Z-Z see "Bent Cap Details No. 2" sheet.
4. For Sections G-G and H-H see "Column Details No. 1" sheet.
5. For Sections J-J and K-K see "Column Details No. 2" sheet.
6. For Sections A-A, B-B, C-C and D-D see "Bent Cap Details No. 1" sheet.

REGISTERED PROFESSIONAL ENGINEER M.J. Cullen No. C 40620 Exp. 03-31-09 CIVIL STATE OF CALIFORNIA

MARK	DATE	REVISION(S) DESCRIPTIONS	DES	CHK	DET
1	10-30-08	Added Section L-L	MC	CD	GS

REGISTERED CIVIL ENGINEER: DATE:

CONTRACT CHANGE ORDER NO 168
SHEET 13 OF 21

LEGEND:
-------- Indicates Existing Structure

NOTE:
THE CONTRACTOR SHALL VERIFY ALL CONTROLLING FIELD DIMENSIONS BEFORE ORDERING OR FABRICATING ANY MATERIAL.

Caltrans Metric

	BY	CHECKED
DESIGN	C. M. Duan	G. Schuster
DETAILS	A. Chen/G. Souza/S.Jiang	M. Cullen/G. Schuster
QUANTITIES	C. M. Duan	M. J. Cullen

ALL DIMENSIONS ARE IN MILLIMETERS UNLESS OTHERWISE SHOWN

ORIGINAL SCALE IN MILLIMETERS FOR REDUCED PLANS 0 10 20 30 40 50 60 70 80 90 100

STATE OF CALIFORNIA
DEPARTMENT OF TRANSPORTATION

DIVISION OF ENGINEERING SERVICES
STRUCTURE DESIGN
DESIGN BRANCH 5

CU 04251
EA 0120P1
FILE => 34-0006-h-b45a_la_r1.dgn

BRIDGE NO. 34-0006
KILOMETER POST 12.6

DISREGARD PRINTS BEARING EARLIER REVISION DATES

REVISION DATES 5-31-07 6-7-07 11-05-07 11-30-07 12-06-07 12-18-07 1-07-08 1-11-08 2-19-08 10-30-08

STRUCTURES DESIGN DETAIL SHEET (METRIC) (REV.03-17-04)

WEST TIE IN PHASE 2
SOUTH - SOUTH DETOUR
BENT 45A LAYOUT

SHEET 28R1 OF 64

USERNAME => QSOUZA DATE PLOTTED => 31-OCT-2008 TIME PLOTTED => 10:09

DIST	COUNTY	ROUTE	KILOMETER POST TOTAL PROJECT	SHEET No	TOTAL SHEETS
04	SF	80	12.6/13.2		

REGISTERED CIVIL ENGINEER — DATE 10-30-08

PLANS APPROVAL DATE

The State of California or its officers or agents shall not be responsible for the accuracy or completeness of electronic copies of this plan sheet.

M. J. CULLEN No. C 40620 Exp. 03-31-09 CIVIL — REGISTERED PROFESSIONAL ENGINEER — STATE OF CALIFORNIA

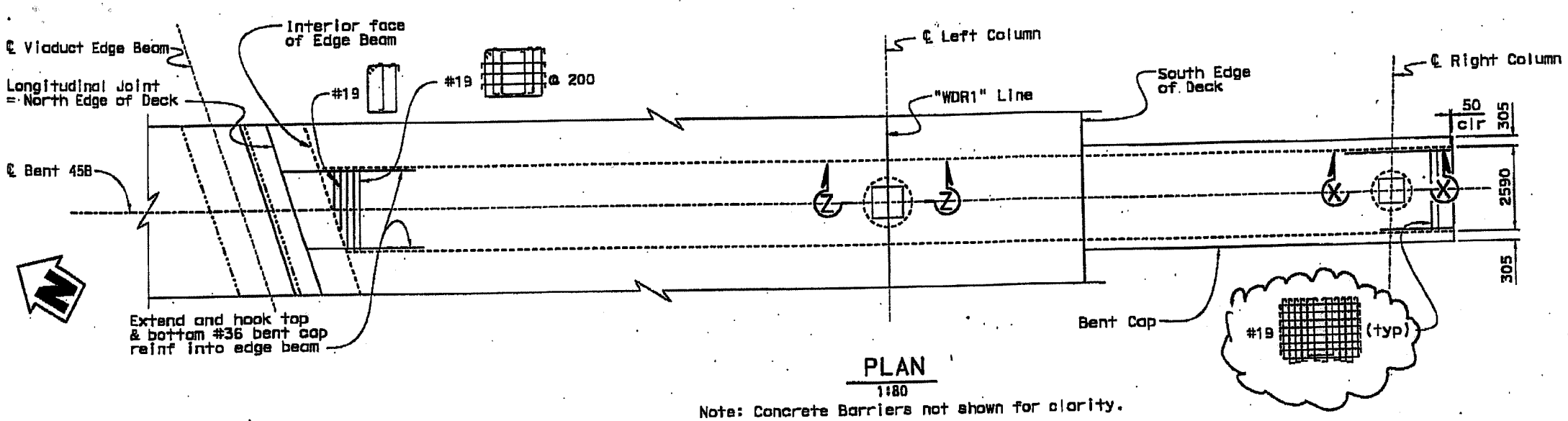

PLAN
1:80

Note: Concrete Barriers not shown for clarity.

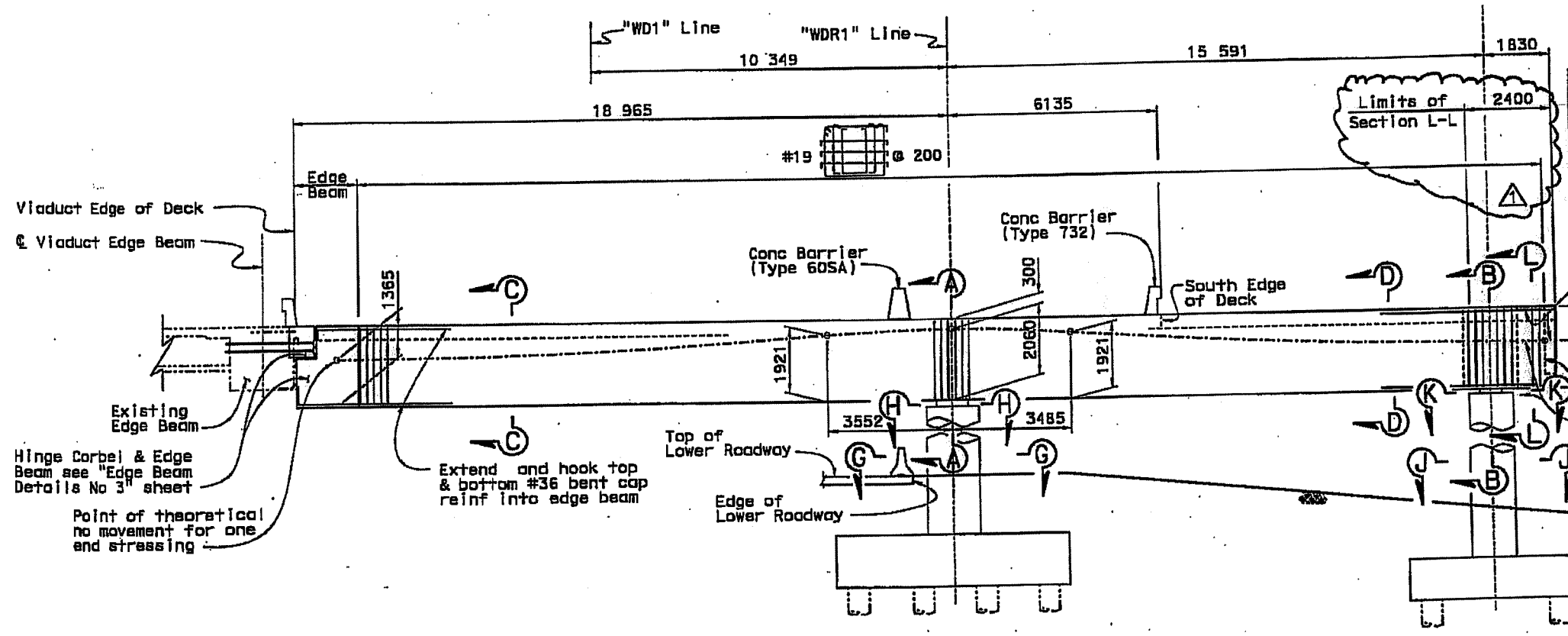

ELEVATION
1:80

STA "WDR1" 50+98.763

NOTE:
THE CONTRACTOR SHALL VERIFY ALL CONTROLLING FIELD DIMENSIONS BEFORE ORDERING OR FABRICATING ANY MATERIAL.

BENT CAP PRESTRESSING NOTES

1860 MPa Low Relaxation Strands:

Pjack	= 45 450 kN
Anchor Set	= 10 mm
Friction curvature coefficient	μ = 0.20
Friction wobble coefficient	K = 6.6 x 10^{-7}/mm

Concrete: f'c = 45.0 Mpa @ 28 days
f'ci = 30.0 Mpa @ time of stressing

Contractor shall submit elongation calculations based on initial stress at
☒ = 0.895 times jacking stress

One end stressing shall be performed from Southeast end.

MARK	DATE	REVISION(S) DESCRIPTIONS	DES	CHK	DET
1	10-30-08	Added Section L-L	MC	CD	GS

REGISTERED CIVIL ENGINEER: DATE:

M. J. Cullen No. C 40620 Exp. 03-31-09 CIVIL — REGISTERED PROFESSIONAL ENGINEER — STATE OF CALIFORNIA

CONTRACT CHANGE ORDER NO. 168
SHEET 14 OF 21

Notes:

1. No splices allowed in main column reinforcement.
2. For Edge Beam details, see "Edge Beam Details" sheets.
3. For Sections X-X and Z-Z see "Bent Cap Details No. 2" sheet.
4. For Sections G-G and H-H see "Column Details No. 1" sheet.
5. For Sections J-J and K-K see "Column Details No. 2" sheet.
6. For Sections A-A, B-B, C-C and D-D see "Bent Cap Details No. 1" sheet.

LEGEND:

..... Indicates Existing Structure

Caltrans Metric

ALL DIMENSIONS ARE IN MILLIMETERS UNLESS OTHERWISE SHOWN

	BY	CHECKED
DESIGN	C. M. Duon	G. Schuster
DETAILS	A. Chen/S. Jiang	M. Cullen/G. Schuster
QUANTITIES	C. M. Duon	M. J. Cullen

ORIGINAL SCALE IN MILLIMETERS FOR REDUCED PLANS 0 10 20 30 40 50 60 70 80 90 100

STATE OF CALIFORNIA
DEPARTMENT OF TRANSPORTATION

DIVISION OF ENGINEERING SERVICES
STRUCTURE DESIGN
DESIGN BRANCH 5

CU 04251
EA 0120P1

FILE => 34-0006-n-b45b_to_r1.dgn

BRIDGE NO. 34-0006
KILOMETER POST 12.6

WEST TIE IN PHASE 2
SOUTH - SOUTH DETOUR
BENT 45B LAYOUT

DISREGARD PRINTS BEARING EARLIER REVISION DATES →

REVISION DATES: 8-24-07 | 11-30-07 | 1-11-08 | 7-11-08 | 7-31-08 | 10-30-08

SHEET 29R1 OF 64

STRUCTURES DESIGN DETAIL SHEET (METRIC) (REV. 03-17-04)

USERNAME => QBOUZER DATE PLOTTED => 31-OCT-2008 TIME PLOTTED => 10:08

DIST	COUNTY	ROUTE	TOTAL PROJECT	NO.	SHEETS
04	SF	80	12.6/13.2		

08-11-08
REGISTERED CIVIL ENGINEER DATE

PLANS APPROVAL DATE

REGISTERED PROFESSIONAL ENGINEER — M. J. CULLEN — No. C 40620 — Exp. 03-31-09 — CIVIL — STATE OF CALIFORNIA

The State of California or its officers or agents shall not be responsible for the accuracy or completeness of electronic copies of this plan sheet.

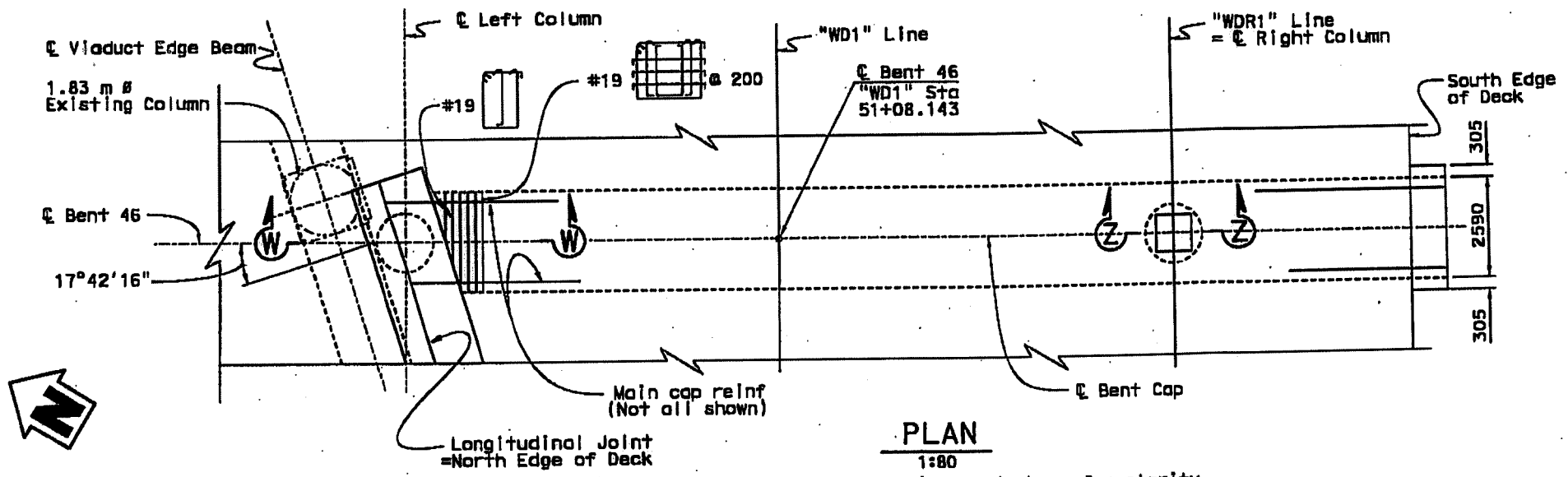

PLAN
1:80

Note: Concrete Barriers not shown for clarity.

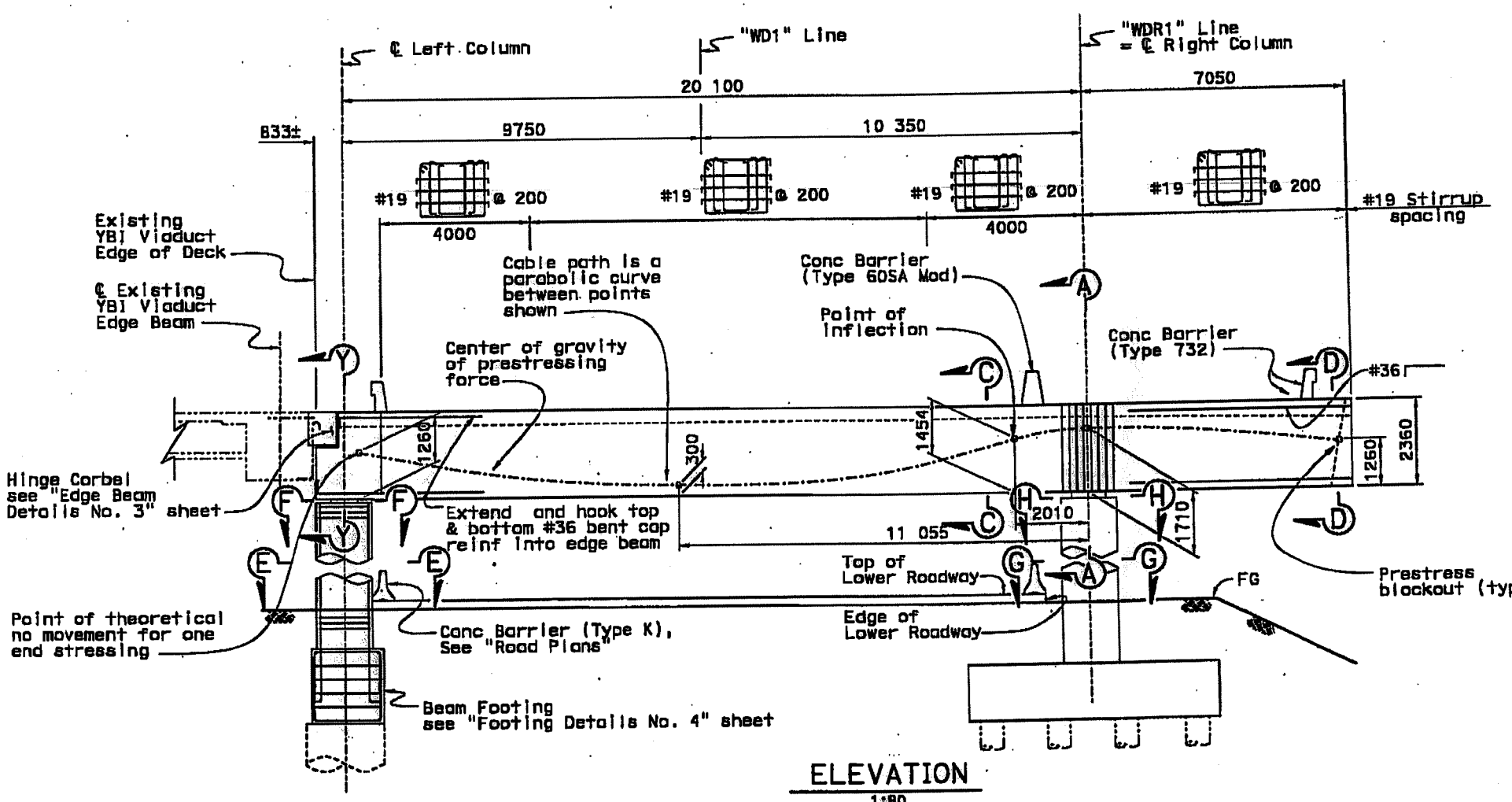

ELEVATION
1:80

STA "WDR1" 51+08.141

NOTE:
THE CONTRACTOR SHALL VERIFY ALL CONTROLLING FIELD DIMENSIONS BEFORE ORDERING OR FABRICATING ANY MATERIAL.

BENT CAP PRESTRESSING NOTES

1860 MPa Low Relaxation Strands:

Pjack	=10 000	kN
Anchor Set	= 10	mm
Friction curvature coefficient	μ = 0.20	
Friction wobble coefficient	K = 6.6 x 10^{-7}/mm	

Concrete: f'c = 45.0 Mpa @ 28 days
f'ci = 30.0 Mpa @ time of stressing

Contractor shall submit elongation calculations based on initial stress at
K = 0.790 times jacking stress

One end stressing shall be performed from Southeast end.

Notes:

1. No splices allowed in main column reinforcement.
2. For Edge Beam details, see Edge Beam Details sheets.
3. For Sections A-A, C-C and D-D see "Bent Cap Details No. 1" sheet.
4. For Sections E-E, F-F, G-G and H-H, see "Column Details No. 1" sheet.
5. For Sections W-W, Y-Y and Z-Z, see "Bent Cap Details No. 2" and "Bent Cap Details No. 3" sheet.

REGISTERED PROFESSIONAL ENGINEER — M. J. Cullen — No. C 40620 — Exp. 03-31-09 — CIVIL — STATE OF CALIFORNIA

MARK	DATE	REVISION(S) DESCRIPTIONS	DES	CHK	DET
1	08-11-08	Revised note to include section Y-Y	CD	MC	GS

REGISTERED CIVIL ENGINEER: DATE:

CONTRACT CHANGE ORDER NO. 168
SHEET 15 OF 21

	BY	CHECKED
DESIGN	C. M. Duan	M. J. Cullen
DETAILS	A. Chen/S. Jiang/G. Souza	M. J. Cullen
QUANTITIES	C. M. Duan	M. J. Cullen

STATE OF CALIFORNIA
DEPARTMENT OF TRANSPORTATION

DIVISION OF ENGINEERING SERVICES
STRUCTURE DESIGN
DESIGN BRANCH 5

BRIDGE NO. 34-0006
KILOMETER POST 12.6

CU 04251
EA 0120P1
FILE => 34-0006-h-b46_lo_r1.dgn

DISREGARD PRINTS BEARING EARLIER REVISION DATES

WEST TIE IN PHASE 2
SOUTH - SOUTH DETOUR
BENT 46 LAYOUT

REVISION DATES

SHEET 30R1 OF 64

STRUCTURES DESIGN DETAIL SHEET (METRIC) (REV.03-17-04)

Caltrans Metric

ALL DIMENSIONS ARE IN MILLIMETERS UNLESS OTHERWISE SHOWN

ORIGINAL SCALE IN MILLIMETERS FOR REDUCED PLANS 0 10 20 30 40 50 60 70 80 90 100

DATE PLOTTED => 13-AUG-2008 TIME PLOTTED => 16:43
USERNAME => GSOUZO

DIST	COUNTY	ROUTE	KILOMETER POST TOTAL PROJECT	SHEET No	TOTAL SHEETS
04	SF	80	12.6/13.2		

REGISTERED CIVIL ENGINEER — DATE 08-11-08

PLANS APPROVAL DATE

The State of California or its officers or agents shall not be responsible for the accuracy or completeness of electronic copies of this plan sheet.

M. J. CULLEN No. C 40620 Exp. 03-31-09 CIVIL — REGISTERED PROFESSIONAL ENGINEER — STATE OF CALIFORNIA

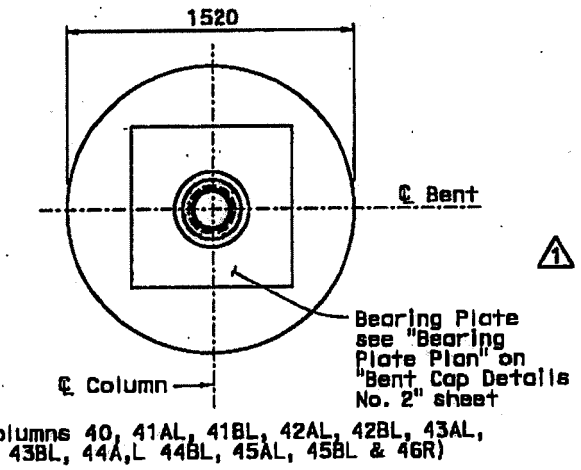

(Columns 40, 41AL, 41BL, 42AL, 42BL, 43AL, 43BL, 44A,L 44BL, 45AL, 45BL & 46R)

SECTION H-H
1:20

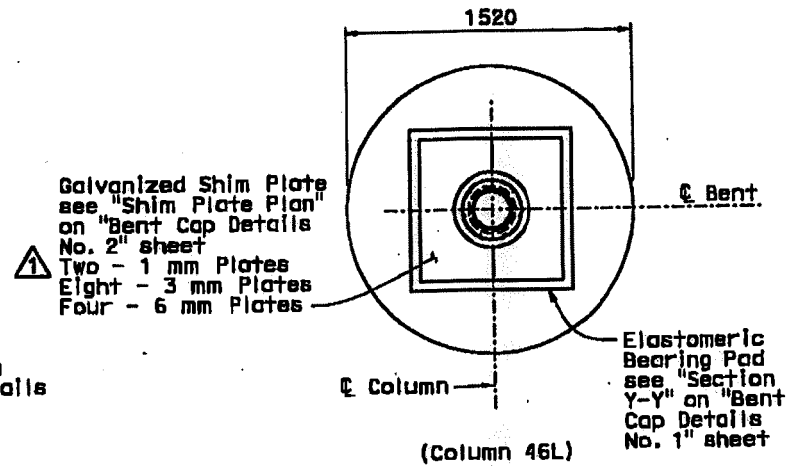

(Column 46L)

SECTION F-F
1:20

Note:

1. Column hoops shall be Ultimate Butt Spliced.
2. For section locations, see " Bent Layout" sheets.

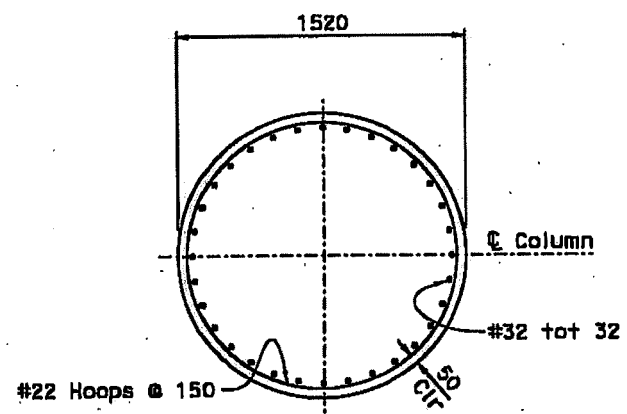

(Columns 40, 41AL, 41BL, 42AL, 42BL, 43AL, 43BL, 44A,L 44BL, 45AL, 45BL & 46R)

SECTION G-G
1:20

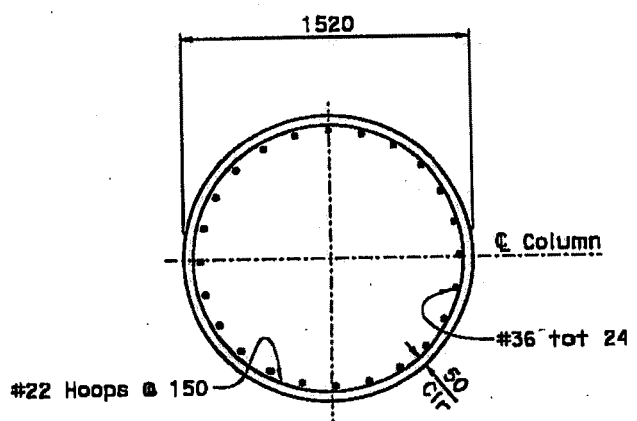

(Columns 46L, 47L & 47R)

SECTION E-E
1:20

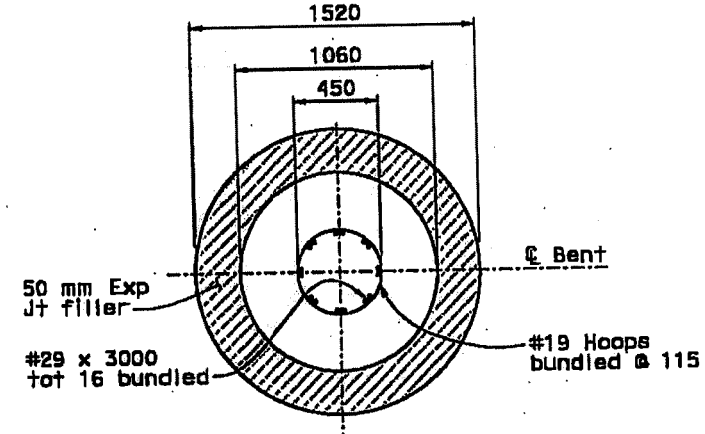

(Columns 47L, 47R, 48L & 48R)

SECTION I-I
1:20

NOTE:
THE CONTRACTOR SHALL VERIFY ALL CONTROLLING FIELD DIMENSIONS BEFORE ORDERING OR FABRICATING ANY MATERIAL.

M. J. Cullen No. C 40620 Exp. 03-31-09 CIVIL — REGISTERED PROFESSIONAL ENGINEER — STATE OF CALIFORNIA

MARK	DATE	REVISION(S) DESCRIPTIONS	DES	CHK	DET
1	07-09-08	Add Details for Shim Plate			

REGISTERED CIVIL ENGINEER: DATE:

CONTRACT CHANGE ORDER NO. 168
SHEET 16 OF 21

	BY	CHECKED
DESIGN	C. M. Duon	G. Schuster
DETAILS	G. S./S. J./A. C.	M. Cullen/G. Schuster
QUANTITIES	C. M. Duon	M. Cullen

Caltrans Metric

ALL DIMENSIONS ARE IN MILLIMETERS UNLESS OTHERWISE SHOWN

ORIGINAL SCALE IN MILLIMETERS FOR REDUCED PLANS 0 10 20 30 40 50 60 70 80 90 100

STATE OF CALIFORNIA
DEPARTMENT OF TRANSPORTATION

DIVISION OF ENGINEERING SERVICES
STRUCTURE DESIGN
DESIGN BRANCH 5

CU 04251
EA 0120P1
FILE => 34-0006-1_column_det01_r1.dgn

BRIDGE NO. 34-0006
KILOMETER POST 12.6

WEST TIE IN PHASE 2
SOUTH - SOUTH DETOUR
COLUMN DETAILS NO. 1

DISREGARD PRINTS BEARING EARLIER REVISION DATES →

REVISION DATES: 07-09-08

SHEET 35R1 OF 64

STRUCTURES DESIGN DETAIL SHEET (METRIC) (REV.03-17-04)

USERNAME => DBOUCO DATE PLOTTED => 13-AUG-2008 TIME PLOTTED => 16:43

DIST	COUNTY	ROUTE	KILOMETER POST TOTAL PROJECT	SHEET No	TOTAL SHEETS
04	SF	80	12.6/13.2		

08-11-08
REGISTERED CIVIL ENGINEER DATE

PLANS APPROVAL DATE

The State of California or its officers or agents shall not be responsible for the accuracy or completeness of electronic copies of this plan sheet.

REGISTERED PROFESSIONAL ENGINEER
M. J. CULLEN
No. C 40620
Exp. 03-31-09
CIVIL
STATE OF CALIFORNIA

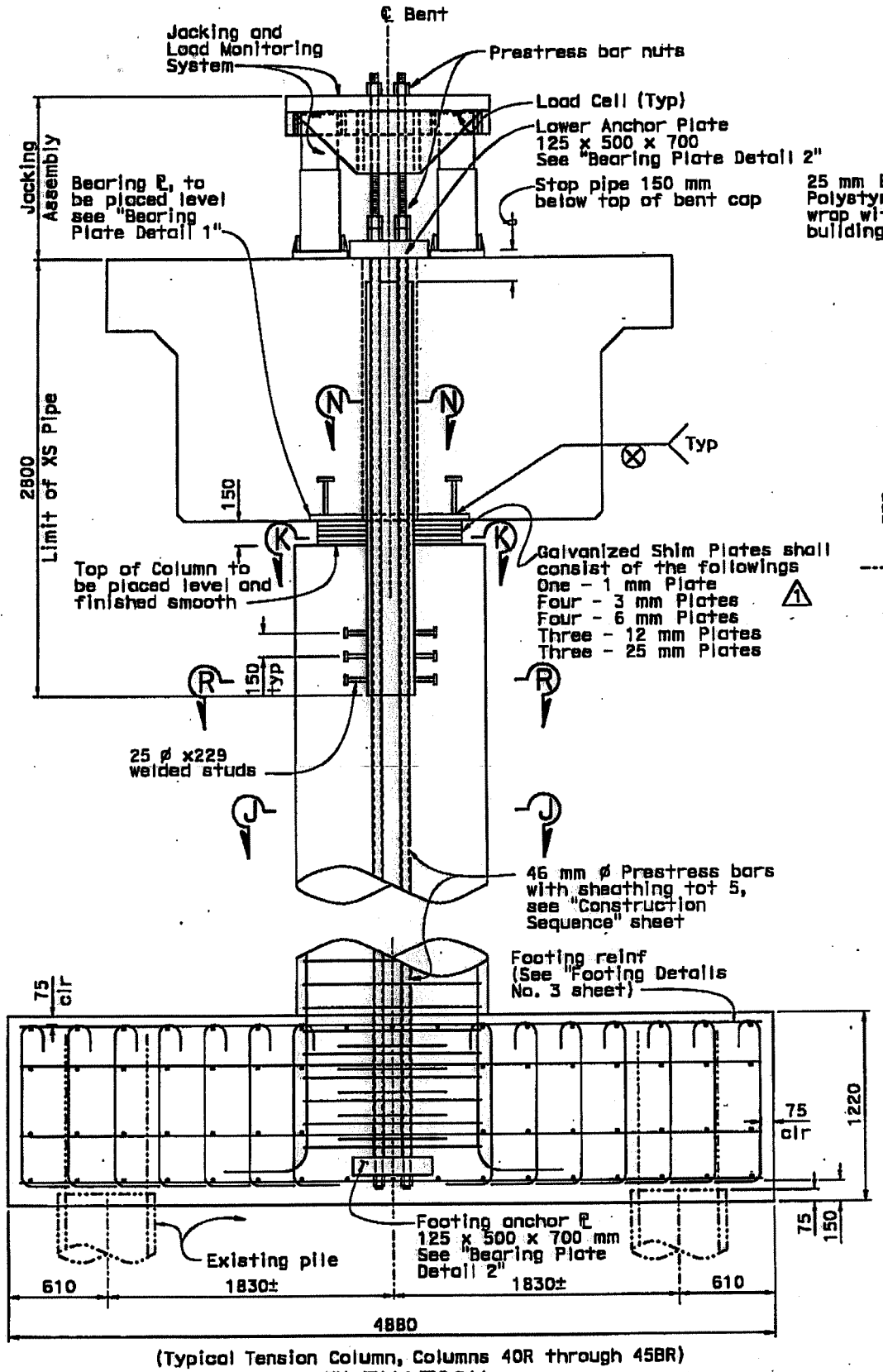

(Typical Tension Column, Columns 40R through 45BR)

ELEVATION
1:20

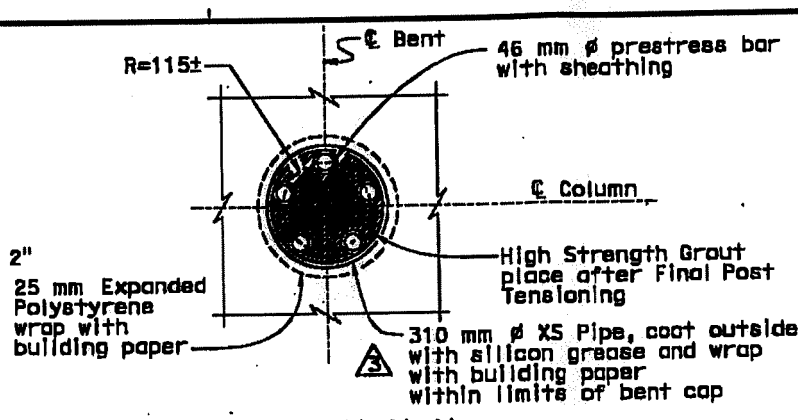

SECTION N-N
1:10

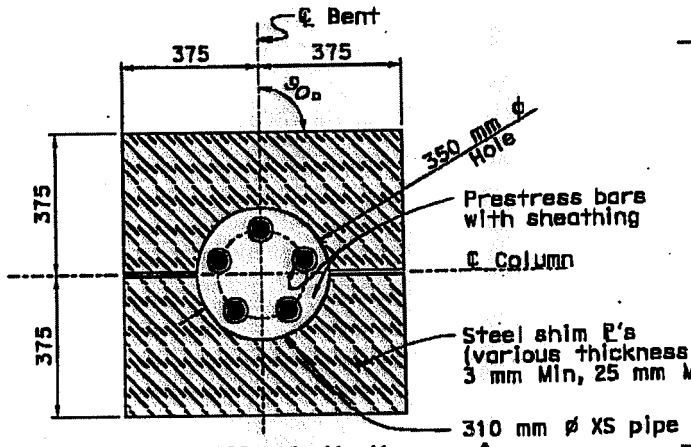

SECTION K-K
1:10

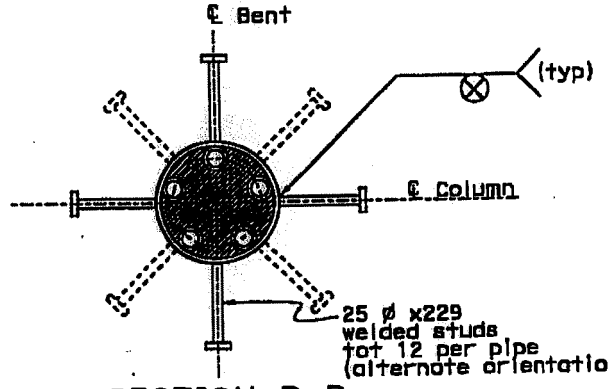

SECTION R-R
1:10

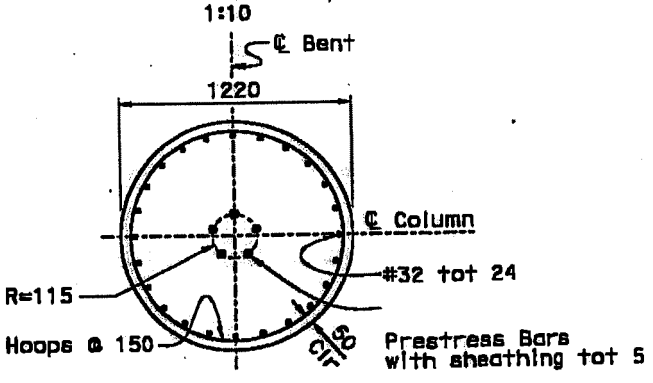

SECTION J-J
1:20

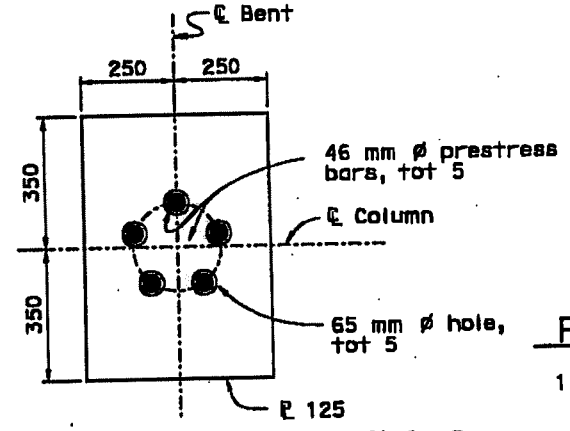

BEARING PLATE DETAILS 2
1:10

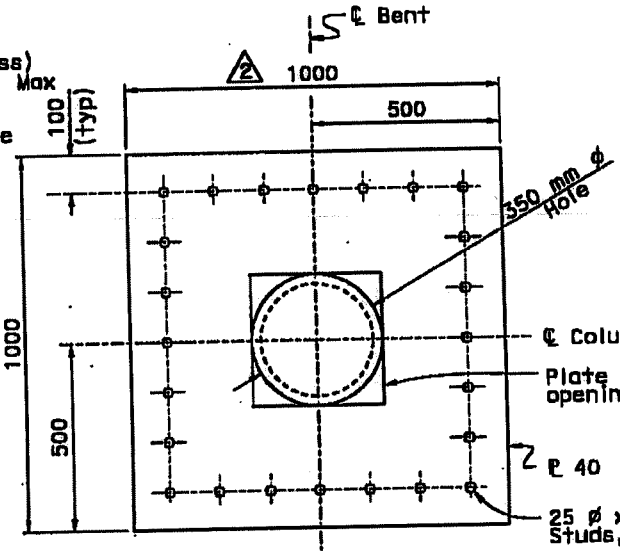

BEARING PLATE DETAIL
1:10

WTI COLUMN 40R THROUGH 45BR FINAL POST TENSIONING PROCEDURE

1. Final Post Tensioning Procedure shall proceed only with approval of the Engineer and after the Structure has displayed adequate stability for 60 day period.
2. Record the loads on the jacks at each location.
3. Jack an additional 600 KN of Force into each Column. Lock jacks rigid and re tighten Lower Anchor Plate nuts to 425 N-m of torque.
4. Grout Prestress Bars and XS Pipe.
5. Remove Jacks.

BENT CAP ADJUSTMENT PROCEDURE (IF REQUIRED)

1. Remove required number of shim plates.
2. Adjust jacks to achieve proper load cell readings and grades as approved by the Engineer.
3. Fill in gap between shim plates and cap soffit.
4. Adjust jacks to achieve adequate bearing between shim plates and cap soffit. Bearing shall be achieved when all gaps between shim plates and soffit have been removed and all plates are snug to one another. Re tighten Lower Anchor Plate Nuts to 425 N-m of torque to reseat anchor Plates.
5. Monitor Structure Stability for 60 days.

NOTE:
THE CONTRACTOR SHALL VERIFY ALL CONTROLLING FIELD DIMENSIONS BEFORE ORDERING OR FABRICATING ANY MATERIAL.

REGISTERED PROFESSIONAL ENGINEER
M.J. Cullen
No. C 40620
Exp. 03-31-09
CIVIL
STATE OF CALIFORNIA

MARK	DATE	REVISION(S) DESCRIPTIONS	DES	CHK	DET
3	07-09-08	Redefine the name of XS Pipe			
2	07-09-08	Change the size of Bearing Plate			
1	07-09-08	Add Details for Shim Plate			

REGISTERED CIVIL ENGINEER: DATE:

CONTRACT CHANGE ORDER NO. 168
SHEET 17 OF 21

	BY	CHECKED
DESIGN	C. M. Duan	M. J. Cullen
DETAILS	A. Chen/S. Jiang/T. Cotton	M. J. Cullen
QUANTITIES	C. M. Duan	M. J. Cullen

ALL DIMENSIONS ARE IN MILLIMETERS UNLESS OTHERWISE SHOWN

ORIGINAL SCALE IN MILLIMETERS FOR REDUCED PLANS 0 10 20 30 40 50 60 70 80 90 100

STATE OF CALIFORNIA
DEPARTMENT OF TRANSPORTATION

DIVISION OF ENGINEERING SERVICES
STRUCTURE DESIGN
DESIGN BRANCH 5

CU 04251
EA 0120P1

FILE => 34-0006-1_column_det02_r1.dgn

BRIDGE NO. 34-0006
KILOMETER POST 12.6

DISREGARD PRINTS BEARING EARLIER REVISION DATES

REVISION DATES: 07-09-08 | | | | | | | | |

SHEET 36R1 OF 64

STRUCTURES DESIGN DETAIL SHEET (METRIC) (REV.03-17-04)

WEST TIE IN PHASE 2
SOUTH - SOUTH DETOUR
COLUMN DETAILS NO. 2

DATE PLOTTED => 13-AUG-2008
TIME PLOTTED => 16:43
USERNAME => gdouzeo

DIST	COUNTY	ROUTE	KILOMETER POST TOTAL PROJECT	SHEET No	TOTAL SHEETS
04	SF	80	12.6/13.2		

MJ Cullen 01-09-09
REGISTERED CIVIL ENGINEER DATE

PLANS APPROVAL DATE

The State of California or its officers or agents shall not be responsible for the accuracy or completeness of electronic copies of this plan sheet.

REGISTERED PROFESSIONAL ENGINEER — M. J. CULLEN — No. C 40620 — Exp. 03-31-09 — CIVIL — STATE OF CALIFORNIA

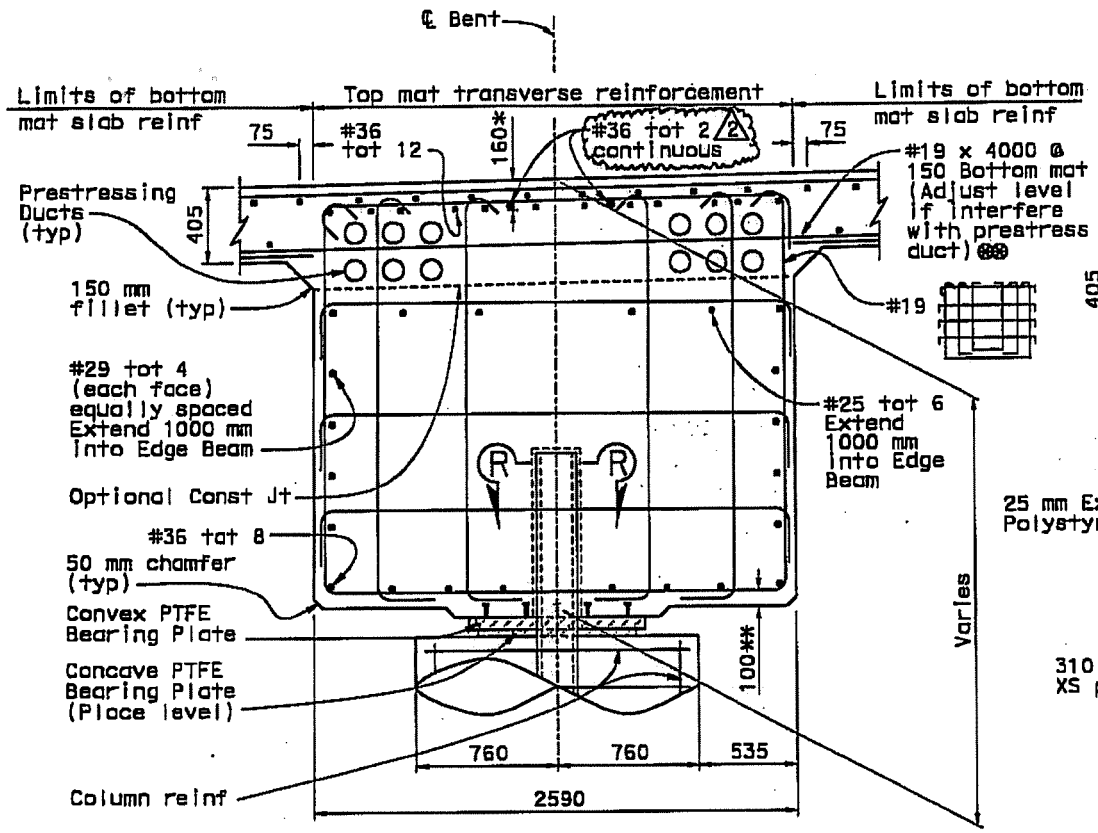

(Bents at left Columns 40-45B and at right Column 46)

SECTION A-A

1:20

* Indicates clearance to top main reinforcement
** Clearance to bottom main reinforcement

⊛⊛ #19 2000 may be used in lieu of ③ #19 x 4000 as approved by the Engineer

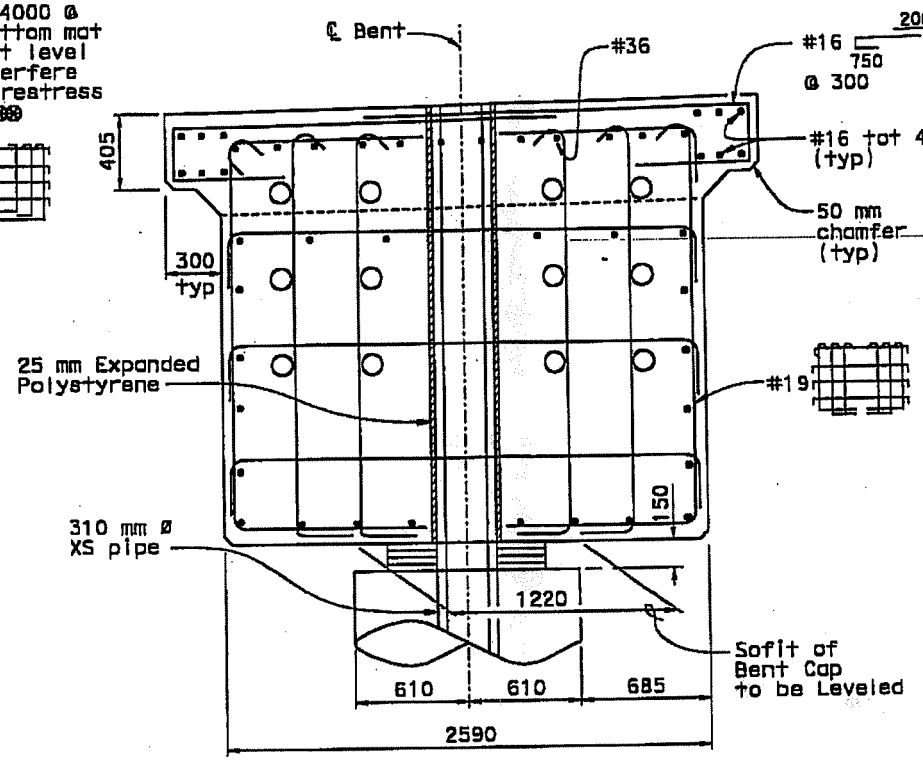

(Bents at right Columns 40-45B)
Note: For details not shown, see "Section A-A"

SECTION B-B

1:20

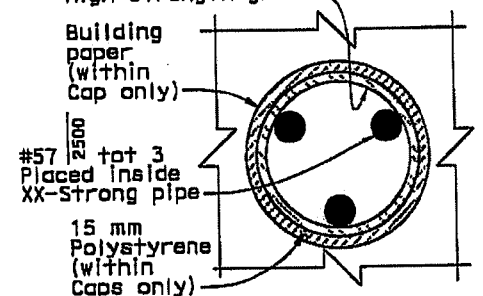

SECTION R-R

1:5

⊛ Place 30 mm Polystyrene above pin

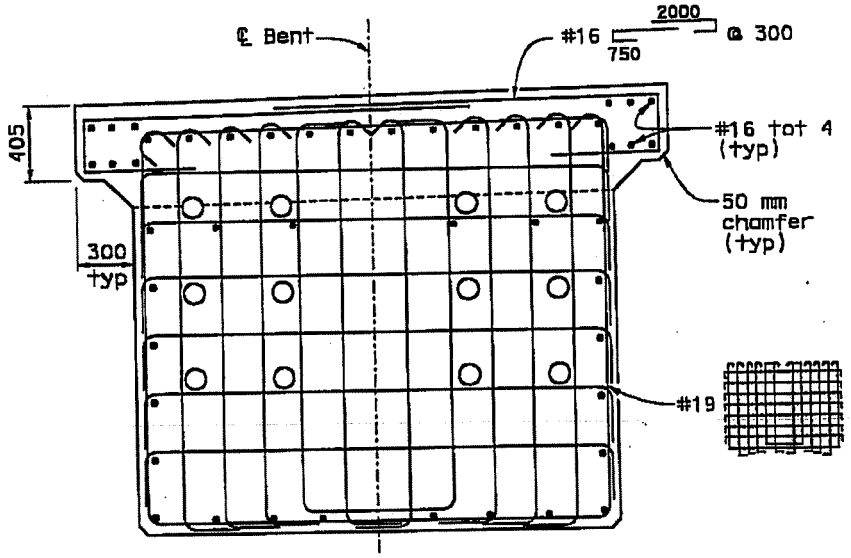

(Bents 40-46)
Note: For details not shown, see "Section A-A"

⚠1 SECTION L-L

1:20

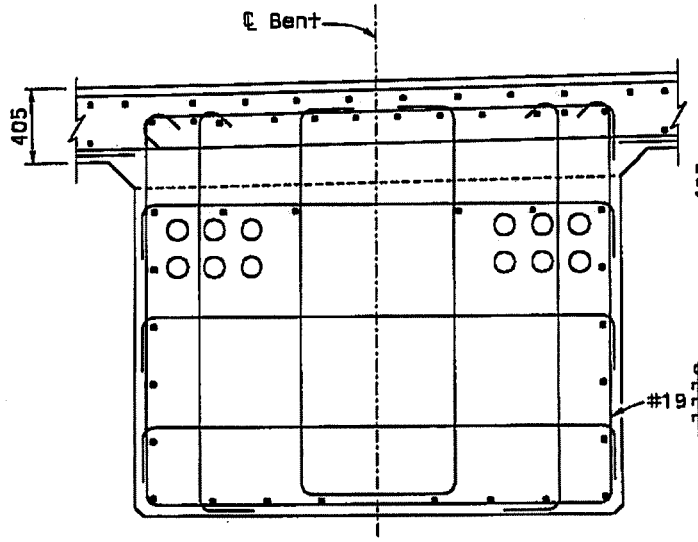

(Bents 40-46)
Note: For details not shown, see "Section A-A"

SECTION C-C

1:20

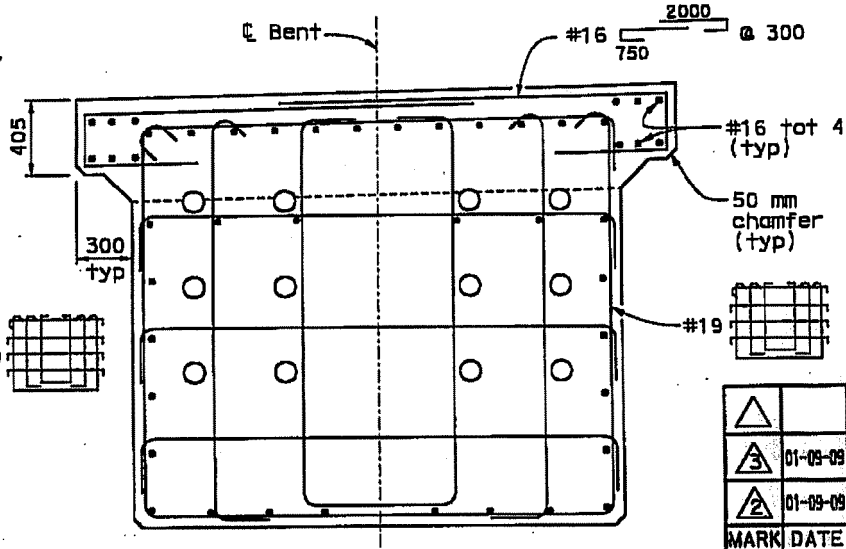

(Bents 40-46)
Note: For details not shown, see "Section A-A"

SECTION D-D

1:20

Notes:

1. For column reinforcement details see "Column Details No. 1" & "Column Details No. 2" sheets.
2. Transverse Bent Cap Stirrups may be bent or discontinued to place Prestressing Ducts or steel pipes.
3. All Transverse Bent Cap reinf shall be placed normal to ℄ Bent.
4. For locations of Sections A-A, B-B, C-C and D-D see Bent Cap Layout sheets.

NOTE:
THE CONTRACTOR SHALL VERIFY ALL CONTROLLING FIELD DIMENSIONS BEFORE ORDERING OR FABRICATING ANY MATERIAL.

REGISTERED PROFESSIONAL ENGINEER — M.J. Cullen — No. C 40620 — Exp. 03-31-09 — CIVIL — STATE OF CALIFORNIA

MARK	DATE	REVISION(S) DESCRIPTIONS	DES	CHK	DET
△					
③	01-09-09	Add optional #19 reinforcement	CD	MC	GS
②	01-09-09	Additional #36 reinforcement	CD	MC	GS

REGISTERED CIVIL ENGINEER: DATE:

CONTRACT CHANGE ORDER NO. 168
SHEET __ OF __

REGISTERED PROFESSIONAL ENGINEER — M.J. Cullen — No. C 40620 — Exp. 03-31-09 — CIVIL — STATE OF CALIFORNIA

MARK	DATE	REVISION(S) DESCRIPTIONS	DES	CHK	DET
△					
△					
△					
①	10-30-08	Added Section L-L	MC	CD	GS

REGISTERED CIVIL ENGINEER: DATE:

CONTRACT CHANGE ORDER NO 168
SHEET 18 OF 21

Caltrans Metric

ALL DIMENSIONS ARE IN MILLIMETERS UNLESS OTHERWISE SHOWN

ORIGINAL SCALE IN MILLIMETERS FOR REDUCED PLANS 0 10 20 30 40 50 60 70 80 90 100

	BY	CHECKED
DESIGN	C. M. Duan	M. J. Cullen
DETAILS	G. M. Souza/S. Jiang	M. J. Cullen
QUANTITIES	C. M. Duan	M. J. Cullen

STATE OF CALIFORNIA
DEPARTMENT OF TRANSPORTATION

DIVISION OF ENGINEERING SERVICES
STRUCTURE DESIGN
DESIGN BRANCH 5

CU 04251
EA 0120P1

FILE => 34-0006-1-bent_det01_r3.dgn

BRIDGE NO. 34-0006
KILOMETER POST 12.6

DISREGARD PRINTS BEARING EARLIER REVISION DATES → 12-15-21 | 02-25-21 | 08-14-08 | 10-30-08 | 01-09-09 | 01-16-08 | 01-16-08

SHEET 38R3 OF 64

STRUCTURES DESIGN DETAIL SHEET (METRIC) (REV.03-17-04)

WEST TIE IN PHASE 2
SOUTH - SOUTH DETOUR
BENT CAP DETAILS NO. 1

USERNAME => bdozier
DATE PLOTTED => 09-JAN-2009
TIME PLOTTED => 16:20

DIST	COUNTY	ROUTE	KILOMETER POST TOTAL PROJECT	SHEET No	TOTAL SHEETS
04	SF	80	12.6/13.2		

REGISTERED CIVIL ENGINEER 08-11-08 DATE

PLANS APPROVAL DATE

The State of California or its officers or agents shall not be responsible for the accuracy or completeness of electronic copies of this plan sheet.

REGISTERED PROFESSIONAL ENGINEER M. J. CULLEN No. C 40620 Exp. 03-31-09 CIVIL STATE OF CALIFORNIA

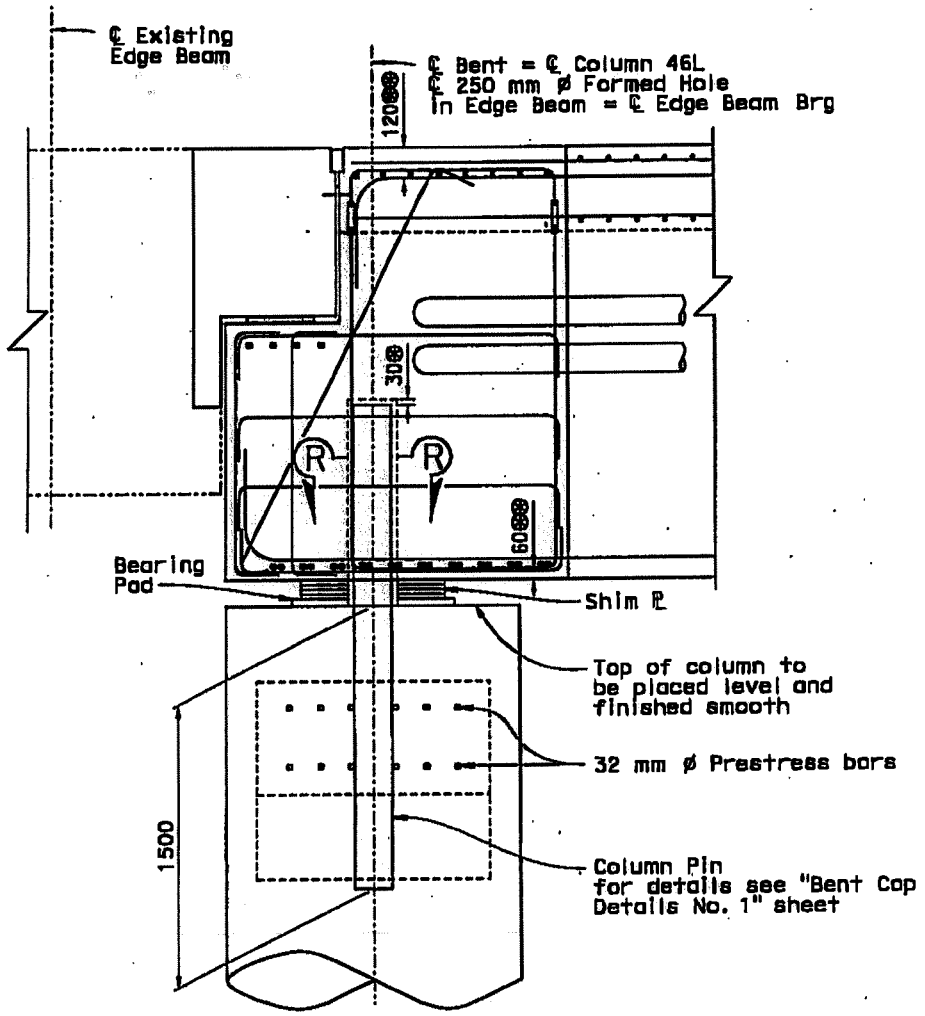

(Bents 46 Left Column)

SECTION W-W

1:20

⊛ Place 30 mm Polystyrene above pin
⊛⊛ Indicates clearance to main reinforcement

For section R-R see "Bent Cap Details No. 1" sheet

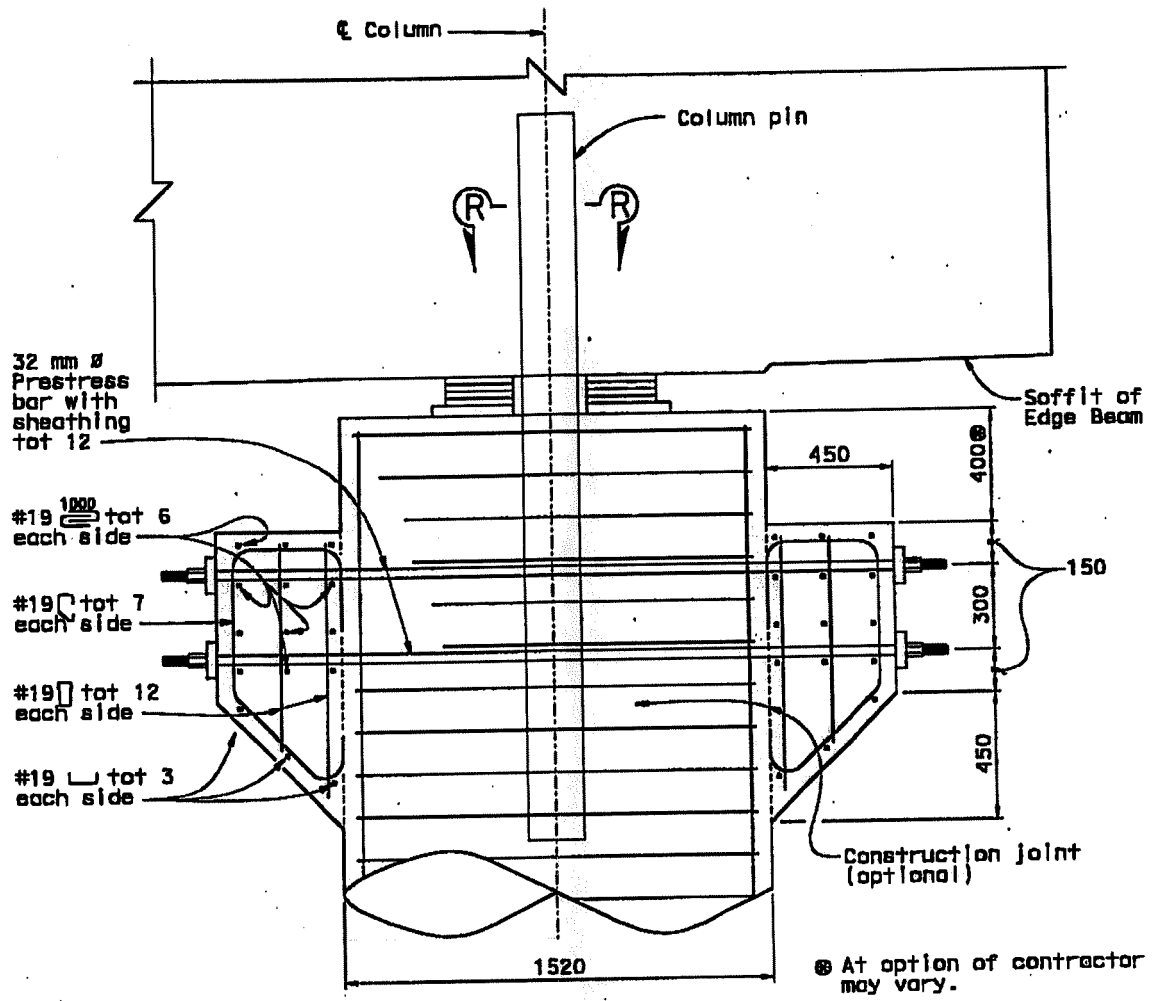

⊛ At option of contractor may vary.

ELEVATION

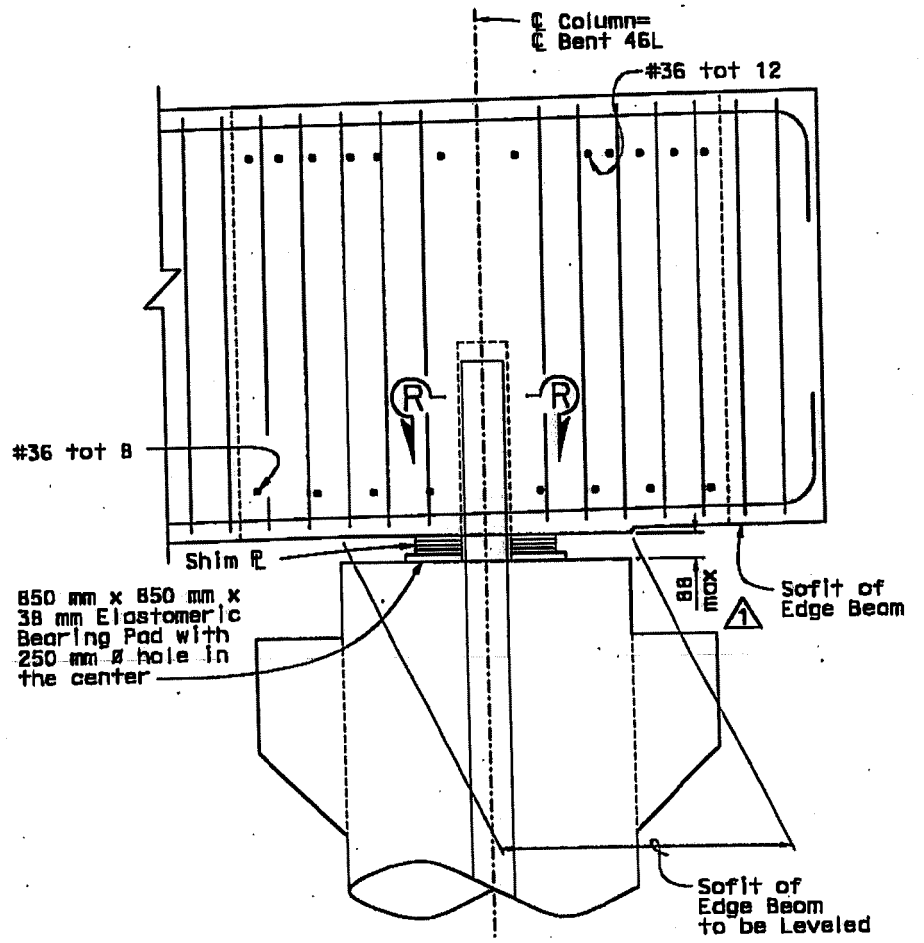

(Bent at Left Column 46)

SECTION Y-Y

1:20

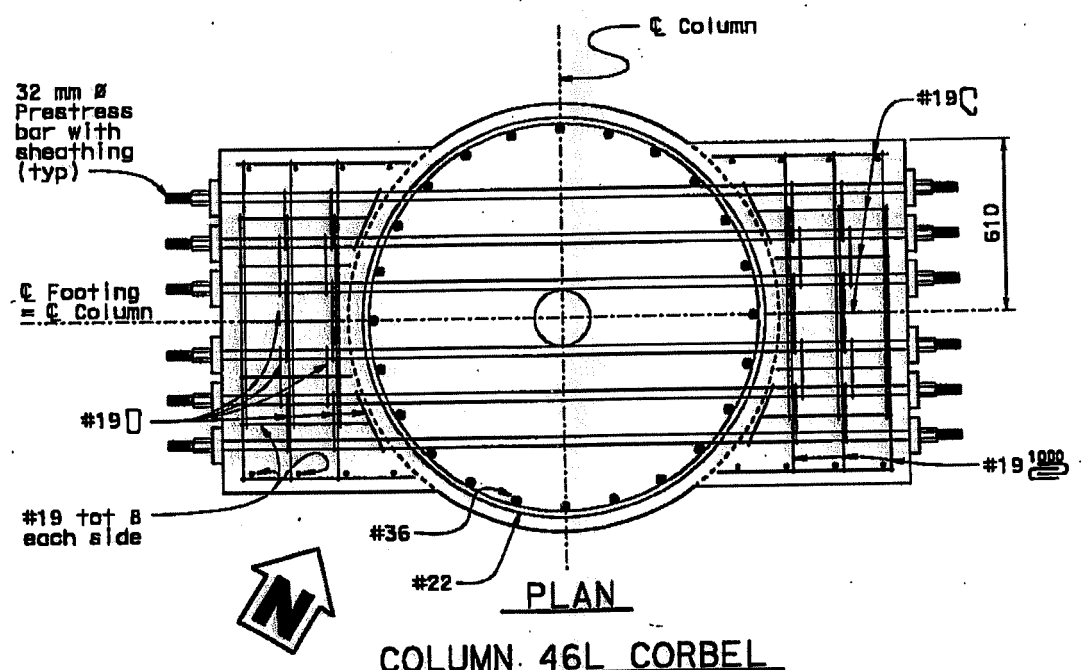

PLAN

COLUMN 46L CORBEL

no scale

PRESTRESSING NOTES

Prestressing Bars:
32 mm ø Prestress bars shall meet ASTM Designation A722.

Working Force P_f:
P_f = 500 kN Total force per bar after losses.

Per Prestressing Bar:
The total losses in prestressed bars due to creep, shrinkage and elastic shortening of concrete and relaxing of prestressing steel shall be assumed to be 150 MPa.

Stressing Sequence:
One end jacking from either end. Bars shall be grouted after stressing

NOTE:
THE CONTRACTOR SHALL VERIFY ALL CONTROLLING FIELD DIMENSIONS BEFORE ORDERING OR FABRICATING NY MATERIAL.

REGISTERED PROFESSIONAL ENGINEER M.J. Cullen No. C 40620 Exp. 03-31-09 CIVIL STATE OF CALIFORNIA

MARK	DATE	REVISION(S) DESCRIPTIONS	DES	CHK	DET
1	07-09-08	Change the Estimates for the Max Possible Gap			

REGISTERED CIVIL ENGINEER: DATE:

CONTRACT CHANGE ORDER NO. 168
SHEET 19 OF 21

WEST TIE IN PHASE 2
SOUTH - SOUTH DETOUR
BENT CAP DETAILS NO. 3

Caltrans Metric

	BY	CHECKED
DESIGN	C. M. Duan	M. J. Cullen
DETAILS	G. M. Souza/S. Jiang	M. J. Cullen
QUANTITIES	C. M. Duan	M. J. Cullen

ALL DIMENSIONS ARE IN MILLIMETERS UNLESS OTHERWISE SHOWN

ORIGINAL SCALE IN MILLIMETERS FOR REDUCED PLANS 0 10 20 30 40 50 60 70 80 90 100

STATE OF CALIFORNIA
DEPARTMENT OF TRANSPORTATION

DIVISION OF ENGINEERING SERVICES
STRUCTURE DESIGN
DESIGN BRANCH 5

CU 04251
EA 0120P1

BRIDGE NO. 34-0006
KILOMETER POST 12.6

DISREGARD PRINTS BEARING EARLIER REVISION DATES

REVISION DATES

SHEET 40R1 OF 64

STRUCTURES DESIGN DETAIL SHEET (METRIC) (REV.03-17-04)

FILE => 34-0006-1-bent_det03_r1.dgn

USERNAME => dsouza DATE PLOTTED => 13-AUG-2008 TIME PLOTTED => 16:43

DIST	COUNTY	ROUTE	KILOMETER POST TOTAL PROJECT	SHEET No	TOTAL SHEETS
04	SF	80	12.6/13.2		

02-03-09
REGISTERED CIVIL ENGINEER DATE

PLANS APPROVAL DATE

The State of California or its officers or agents shall not be responsible for the accuracy or completeness of electronic copies of this plan sheet.

REGISTERED PROFESSIONAL ENGINEER — M. J. CULLEN — No. C 40620 — Exp. 03-31-09 — CIVIL — STATE OF CALIFORNIA

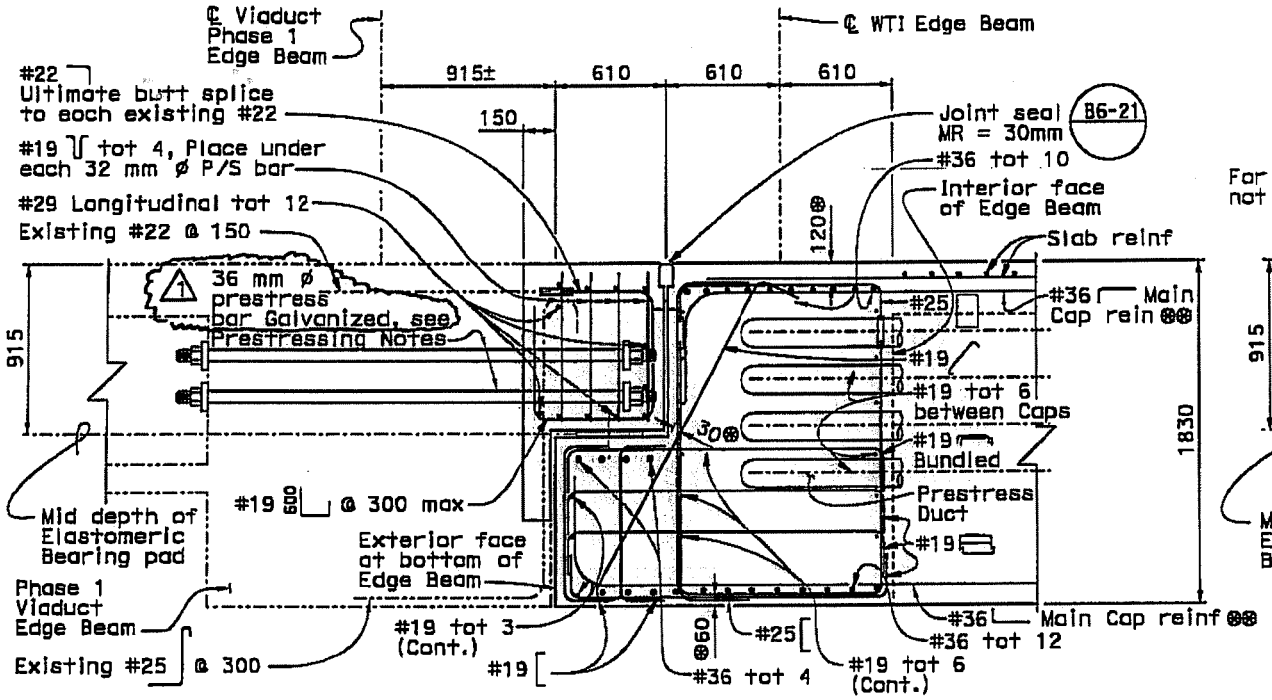

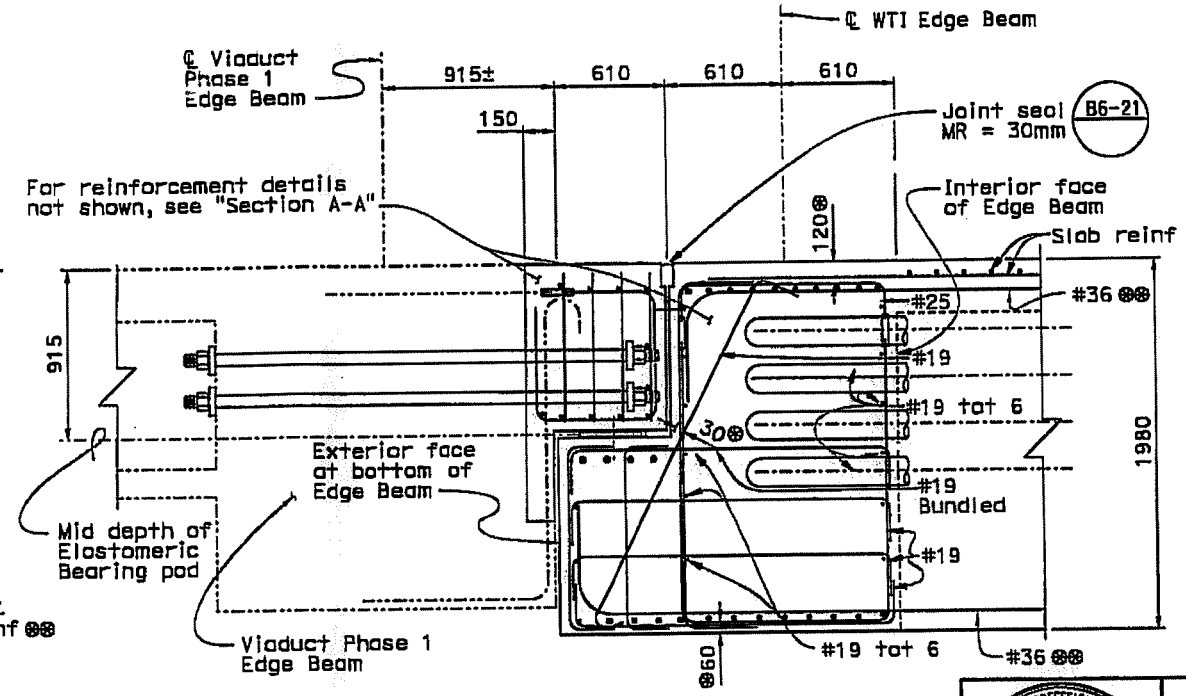

Notes:

1. For spacing of all Transverse Edge Beam and Hinge Reinforcement, see "Edge Beam Details No 1" sheet
2. All Transverse Edge Beam and Hinge Reinforcement shall be placed normal to ℄ Edge Beam

⊛ Indicates clearance to main reinforcement

⊛⊛ #36 Main Cap Reinforcement may be terminated with a 90° Hook or a T-Head

REGISTERED PROFESSIONAL ENGINEER — M.J. Cullen — No. C 40620 — Exp. 03-30-09 — CIVIL — STATE OF CALIFORNIA

MARK	DATE	REVISION(S) DESCRIPTIONS	DES	CHK	DET
1	02-03-09	Revised Prestress bar (36 mm Galvanized)	MC	CD	GS

REGISTERED CIVIL ENGINEER: DATE:

(Bent 40)

SECTION A-A

1:20

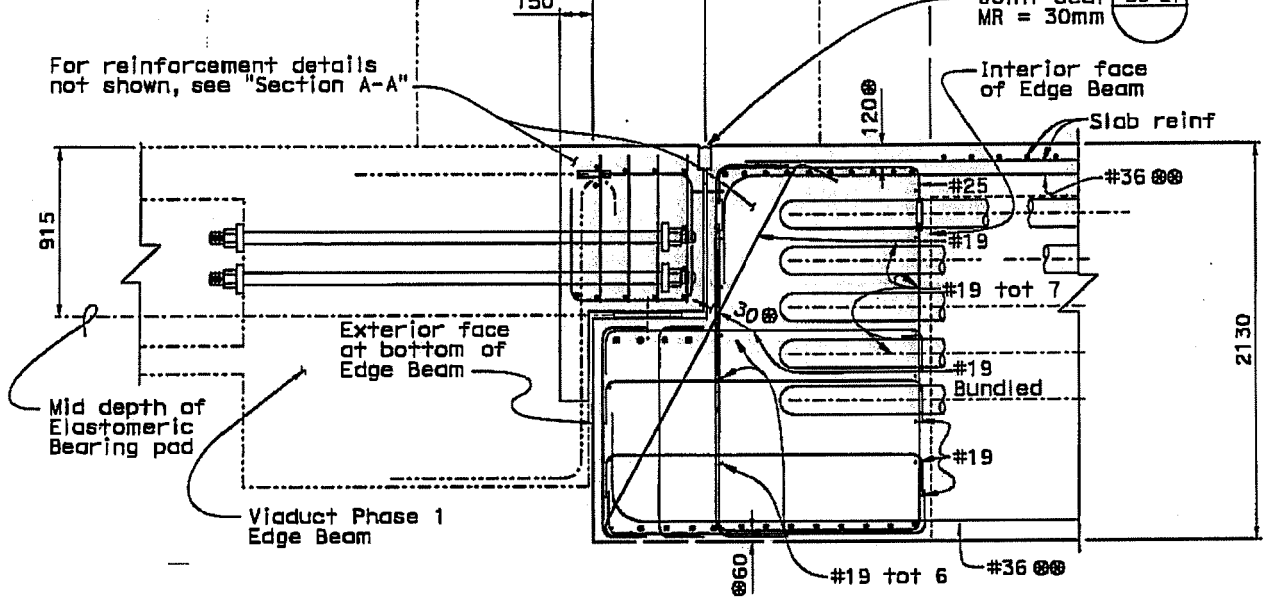

(Bents 41A & 41B)

SECTION B-B

1:20

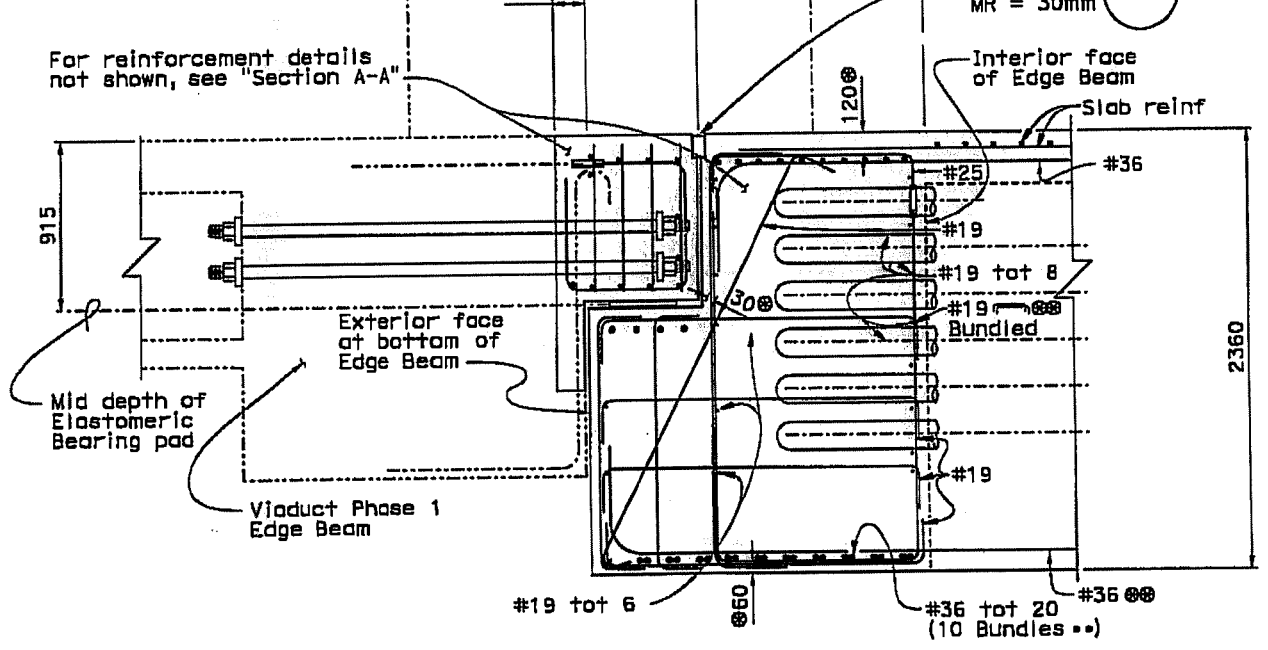

PRESTRESSING NOTES

Prestressing Bars:
36 mm ø Prestress bars shall meet ASTM Designation A722 and be Galvanized 1

Working Force P_f:
P_f = 500 kN Total force per bar after losses.

Per Prestressing Bar:
The total losses in prestressed bars due to creep, shrinkage and elastic shortening of concrete and relaxing of prestressing steel shall be assumed to be 150 MPa.

Stressing Sequence:
One end jacking from the north end. Bars shall be grouted after stressing
f'_c = 35 Mpa

(Bents 42A, 42B, 43A & 43B)

SECTION C-C

1:20

(Bents 44A, 44B, 45A, 45B & 46)

SECTION D-D

1:20

NOTE:
THE CONTRACTOR SHALL VERIFY ALL CONTROLLING FIELD DIMENSIONS BEFORE ORDERING OR FABRICATING ANY MATERIAL.

CONTRACT CHANGE ORDER NO. 168
SHEET 20 OF 21

	BY	CHECKED
DESIGN	C. M. Duan	G. Schuster
DETAILS	G. M. Souza/S. Jiang	M. Cullen/G. Schuster
QUANTITIES	C. M. Duan	M. J. Cullen

STATE OF CALIFORNIA
DEPARTMENT OF TRANSPORTATION

DIVISION OF ENGINEERING SERVICES
STRUCTURE DESIGN
DESIGN BRANCH 5

CU 04251
EA 0120P1

BRIDGE NO. 34-0006
KILOMETER POST 12.6

ALL DIMENSIONS ARE IN MILLIMETERS UNLESS OTHERWISE SHOWN

ORIGINAL SCALE IN MILLIMETERS FOR REDUCED PLANS 0 10 20 30 40 50 60 70 80 90 100

FILE => 34-0006-m-edgebmdet03-r1.dgn

DISREGARD PRINTS BEARING EARLIER REVISION DATES →

REVISION DATES: 2-04-08 | 2-29-08 | 02-03-09 | 11-24-08 | 12-08-08 | 12-16-08 | 01-16-09 | 1-24-09

WEST TIE IN PHASE 2
SOUTH - SOUTH DETOUR
EDGE BEAM DETAILS NO. 3

SHEET 52R1 OF 64

STRUCTURES DESIGN DETAIL SHEET (METRIC) (REV.03-17-04)

USERNAME => dgouzo DATE PLOTTED => 03-FEB-2009 TIME PLOTTED => 13:13

DIST	COUNTY	ROUTE	KILOMETER POST TOTAL PROJECT	SHEET No	TOTAL SHEETS
04	SF	80	12.6/13.2		

02-03-09
REGISTERED CIVIL ENGINEER DATE

PLANS APPROVAL DATE

REGISTERED PROFESSIONAL ENGINEER — M. J. CULLEN — No. C 40620 — Exp. 03-31-09 — CIVIL — STATE OF CALIFORNIA

The State of California or its officers or agents shall not be responsible for the accuracy or completeness of electronic copies of this plan sheet.

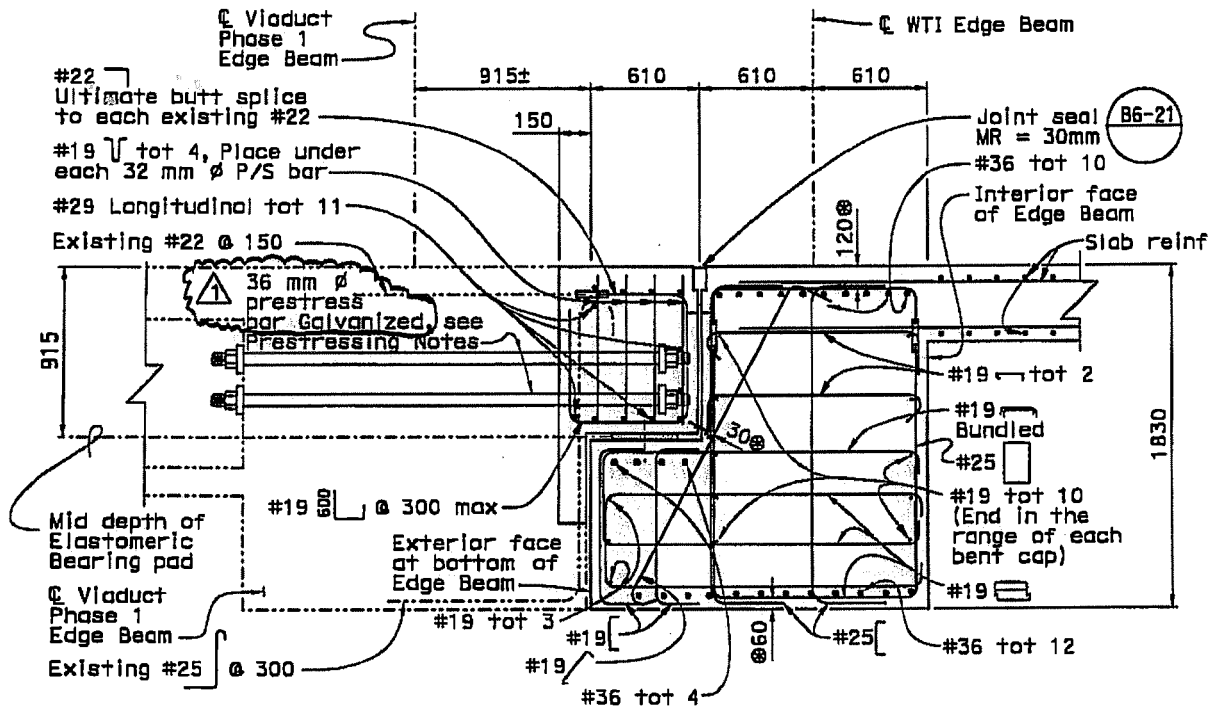

(Spans 39, 40)

SECTION E-E

1:20

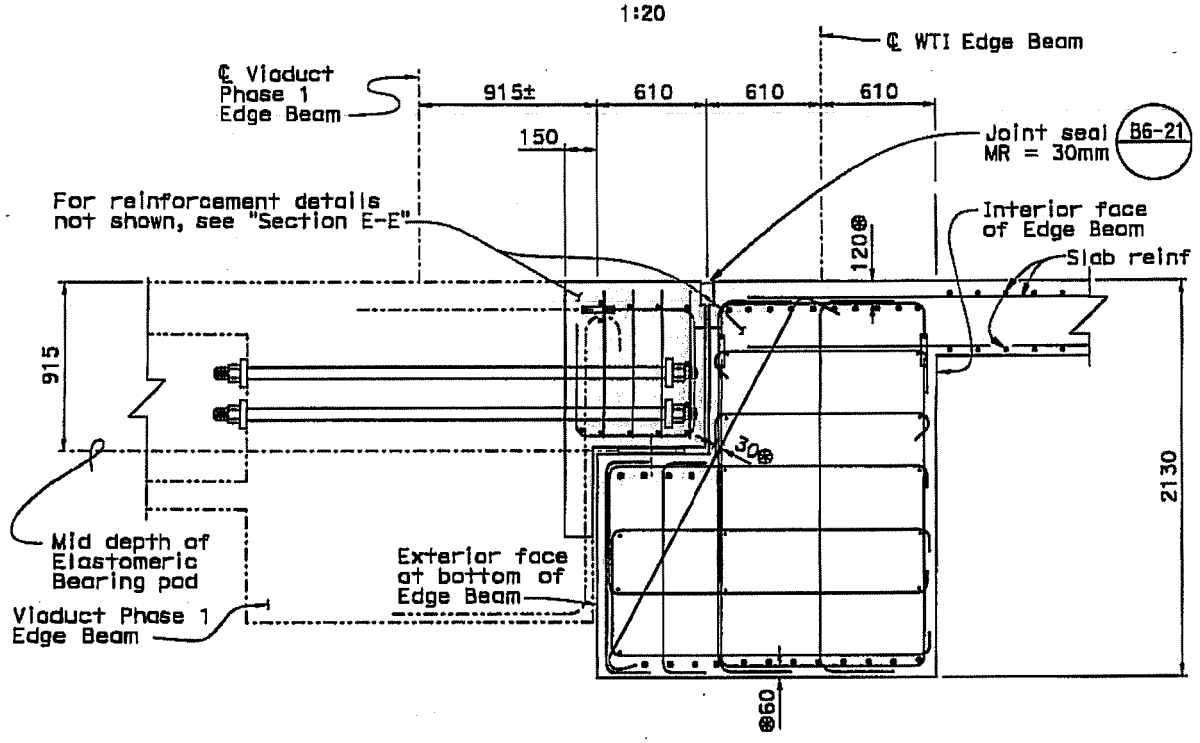

(Spans 42A, 42B, 43A & 43B)

SECTION G-G

1:20

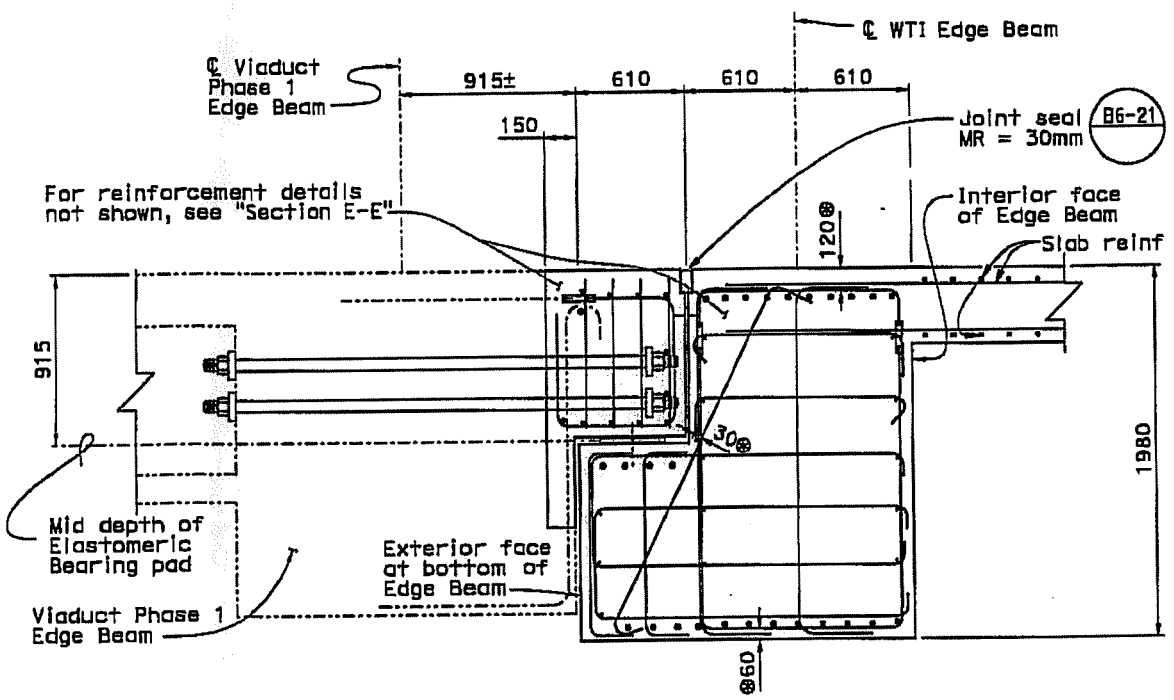

Notes:

1. For spacing of all Transverse Edge Beam and Hinge Reinforcement, see "Edge Beam Details No 1" sheet
2. All Transverse Edge Beam and Hinge Reinforcement shall be placed normal to ℄ Edge Beam
3. For Prestressing notes see "Edge Beam Details No. 3" sheet

⊛ Indicates clearance to main reinforcement

(Spans 41A & 41B)

SECTION F-F

1:20

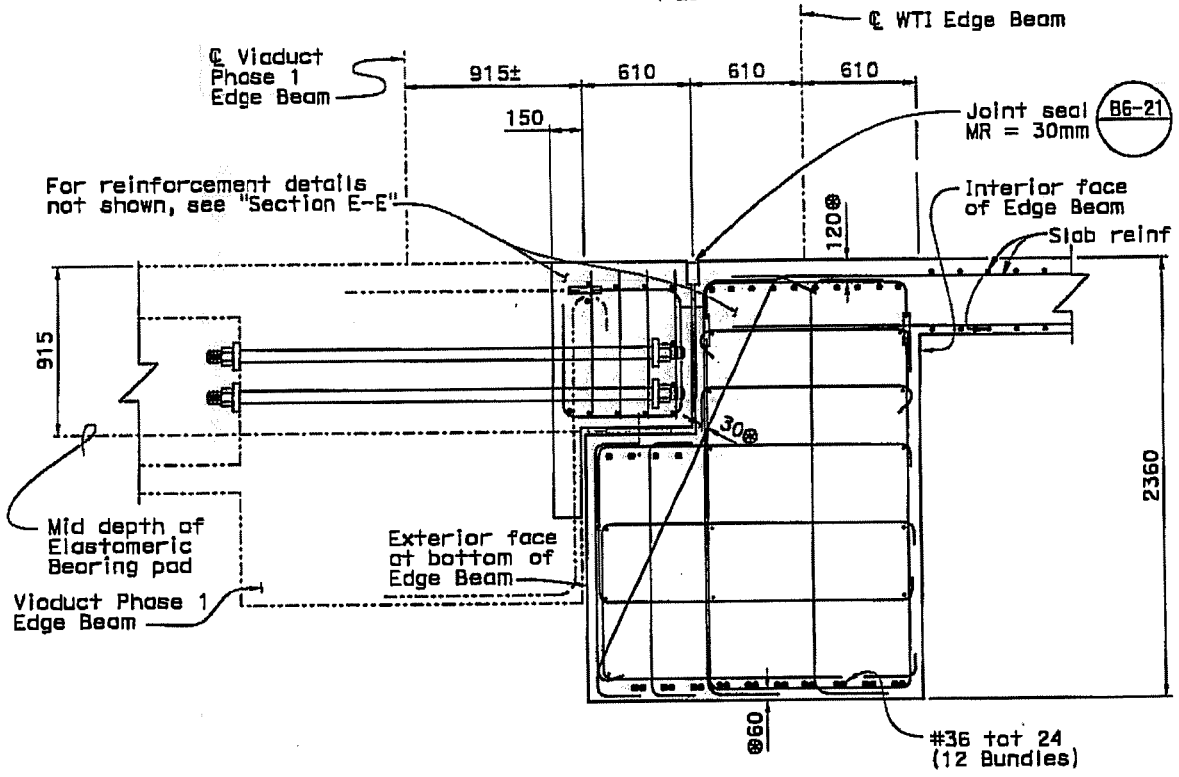

(Spans 44A, 44B, 45A & 45B)

SECTION H-H

1:20

NOTE:
THE CONTRACTOR SHALL VERIFY ALL CONTROLLING FIELD DIMENSIONS BEFORE ORDERING OR FABRICATING ANY MATERIAL.

MARK	DATE	REVISION(S) DESCRIPTIONS	DES CHK	CD GS
1	02-03-09	Revised Prestress bar (36 mm Galvanized)	MC	

REGISTERED CIVIL ENGINEER — DATE

REGISTERED PROFESSIONAL ENGINEER — M. J. Cullen — No. C 40620 — Exp. 03-31-09 — CIVIL — STATE OF CALIFORNIA

CONTRACT CHANGE ORDER NO. 15
SHEET 21 OF 21

	BY	CHECKED
DESIGN	C. W. Duan	G. Schuster
DETAILS	G. M. Souza/S. Jiang	W. Cullen/G. Schuster
QUANTITIES	C. W. Duan	W. J. Cullen

STATE OF CALIFORNIA
DEPARTMENT OF TRANSPORTATION

DIVISION OF ENGINEERING SERVICES
STRUCTURE DESIGN
DESIGN BRANCH 5

BRIDGE NO. 34-0006
KILOMETER POST 12.6

CU 04251
EA 0120P1

WEST TIE IN PHASE 2
SOUTH - SOUTH DETOUR
EDGE BEAM DETAILS NO. 4

ALL DIMENSIONS ARE IN MILLIMETERS UNLESS OTHERWISE SHOWN

ORIGINAL SCALE IN MILLIMETERS FOR REDUCED PLANS 0 10 20 30 40 50 60 70 80 90 100

DISREGARD PRINTS BEARING EARLIER REVISION DATES

REVISION DATES: 11-14-07 | 11-26-07 | 12-14-07 | 12-26-07 | 01-14-08 | 01-28-08 | 02-25-08 | 02-27-08 | 03-02-09 | 03-03-09

SHEET 53R1 OF 64

FILE => 34-0006-m-edgebmdet04-r1.dgn

STRUCTURES DESIGN DETAIL SHEET (METRIC) (REV.03-17-04)

USERNAME => dsouza DATE PLOTTED => 03-FEB-2009 TIME PLOTTED => 13:20

CONTRACT CHANGE ORDER MEMORANDUM

TO: MIKE FORNER / DEANNA VILCHECK	FILE: **E.A.** 04 - 0120R4
	CO-RTE-PM SF-80-12.6/13.2
FROM: BILL CASEY	**FED. NO.**
CCO#: **168** SUPPLEMENT#: **0** Category Code: **CHPT**	CONTINGENCY BALANCE (incl. this change) **$41,450,322.59**
COST: **$147,390.00** INCREASE ☑ DECREASE ☐	HEADQUARTERS APPROVAL REQUIRED? ☐ YES ☑ NO
SUPPLEMENTAL FUNDS PROVIDED: **$0.00**	IS THIS REQUEST IN ACCORDANCE WITH ENVIRONMENTAL DOCUMENTS? ☑ YES ☐ NO
CCO DESCRIPTION: WTI Rebar & Prestressing Changes	**PROJECT DESCRIPTION:** CONSTRUCT ROUTE 80 TEMP BYPASS STRUCTURE

Original Contract Time:	Time Adj. This Change:	Previously Approved CCO Time Adjustments:	Percentage Time Adjusted: (including this change)	Total # of Unreconciled Deferred Time CCO(s): (including this change)
475 Day(s)	**0** Day(s)	**1660** Day(s)	**349** %	**0**

THIS CHANGE ORDER PROVIDES FOR:
Design revisions to the reinforcing steel, shim plates and stressing rods of the West Tie-In (WTI) structure.

This project was awarded in March 2004 to construct a detour that will allow for the tie in of the new east span of the San Francisco Oakland Bay Bridge (SFOBB) to Yerba Buena Island. The TBS encompasses three main structures, the East Tie-In (ETI) to the existing bridge, the West Tie-In (WTI) to Yerba Buena Island and the Viaduct structure between the two tie ins.

The original contract was awarded as a performance based contract with the contractor responsible for the design of the structures based upon certain design criteria. The Department issued a December 14, 2006 memo entitled Strategy for South-South Detour Contract Completion which was approved by Tony Anziano (Toll Bridge Program Manager), Richard Land (Chief Engineer) and subsequently the TBPOC that provided for the Department to assume control of the design of the West Tie-In structure from the contractor.

This change order provides for numerous changes to the structure's reinforcing steel, shim plates and stressing rods as issued by Toll Bridge Design.

Major costs associated with the work include increasing the size of stressing rods for the south edge beam hinge corbel from 32 mm to 36 mm and specifying that these rods be galvanized and adding additional reinforcing steel to the bent caps.

Compensation for this work shall be paid as an adjustment of compensation at an agreed unit price of $147,390.00 which shall be financed from the contract's contingency funds. A cost analysis is on file.

No adjustment of contract time is warranted as the change will not affect the controlling operation.

This change was concurred with by Alec Melkonians - Asst. Project Manager, Jaime Gutierrez - Project Engineer, and Lina Ellis - Maintenance.

ADA Notice: For individuals with sensory disabilities, this document is available in alternate formats. For information call: (916) 654-6410 or TDD (916) 654-3880 or write Records and Forms Management, 1120 N Street, MS-89, Sacramento, CA 95814.

CONTRACT CHANGE ORDER MEMORANDUM

CONCURRED BY:		
Construction Engineer:	for Bill Casey, Resident Engineer DN	Date 2/11/10
Bridge Engineer:		Date
Project Engineer:	~~Minh P. Nguyen, PE~~ JAIME GUTIERREZ	Date ~~2/11/10~~ 2/09/10
Project Manager:	Alec Melkonians	Date 2/10/10
FHWA Rep.:		Date
Environmental:		Date
Other (specify):	Lina Ellis, Maintenance	Date 2/10/10
Other (specify):		Date
District Prior Approval By:		Date
HQ (Issue Approve) By:		Date
Resident Engineer's Signature:	Deanna Viedrech	Date 2/11/10

ESTIMATE OF COST

	THIS REQUEST	TOTAL TO DATE
ITEMS	$0.00	$0.00
FORCE ACCOUNT	$0.00	$0.00
AGREED PRICE	$0.00	$0.00
ADJUSTMENT	$147,390.00	$147,390.00
TOTAL	$147,390.00	$147,390.00

FEDERAL PARTICIPATION

☐ PARTICIPATING ☐ PARTICIPATING IN PART ☑ NONE
☐ NON-PARTICIPATING (MAINTENANCE) ☐ NON-PARTICIPATING

FEDERAL SEGREGATION (if more than one Funding Source or P.I.P. type)
☐ CCO FUNDED PER CONTRACT ☐ CCO FUNDED AS FOLLOWS

FEDERAL FUNDING SOURCE	PERCENT

ADA Notice: For individuals with sensory disabilities, this document is available in alternate formats. For information call: (916) 654-6410 or TDD (916) 654-3880 or write Records and Forms Management, 1120 N Street, MS-89, Sacramento, CA 95814.

CONTRACT CHANGE ORDER

Change Requested by: Engineer

CCO 169	Suppl. No. 0	Contract No. 04 - 0120R4	Road SF-80-12.6/13.2	FED. AID LOC.: ACBRIM-080-1(097)N

To: **CC MYERS INC**

You are directed to make the following changes from the plans and specifications or do the following described work not included in the plans and specifications for this contract. ***NOTE: This change order is not effective until approved by the Engineer.***

Description of work to be done, estimate of quantities and prices to be paid. (Segregate between additional work at contract price, agreed price and force account.) Unless otherwise stated, rates for rental of equipment cover only such time as equipment is actually used and no allowance will be made for idle time. This last percentage shown is the net accumulated increase or decrease from the original quantity in the Engineer's Estimate.

Extra Work at Lump Sum:

Perform the following work pertaining to the handling and jobsite transportation of fabricated steel for the skid bent and skic beam of the East Tie-In portion of the Temporary Bypass Structure (Bridge No. 34-0006 (TEMP)):

1) Provide for a lay down yard at Mare Island to receive and handle all steel shipped by barge from the Contractor's fabrication facility in Vancouver, Washington.
2) Unload 4 EA barge shipments comprised of 7 EA skid beam segments and 12 EA skid bent cross beam assemblies at Mare Island.
3) Load steel at Mare Island for marine transport, ship to the project site and unload steel at the project site.
4) Unload all steel delivered by truck directly to the project site.

For this work, the Contractor shall be compensated an agreed lump sum price of $1,095,020.00 which constitutes full compensation, including all markups, for the work specified under this change order.

This change order provides full compensation for Item No. 9 of the 9 items of work excluded from the lump sum price paid under Change Order No. 129 and no additional compensation shall be paid for that item of work.

Consideration of a time adjustment will be deferred until completion of the work specified herein. Determination of a commensurate time extension will be made in accordance with Section 8-1.07, "Liquidated Damages", of the Standard Specifications and Section 10-1.20 "Time Related Overhead (TRO)" of the Special Provisions.

Compensation for delays resulting from this work will be made in accordance with Section 8-1.09 "Right of Way Delays" of the Standard Specifications and Section 10-1.20 "Time Related Overhead" of the Special Provisions.

Total Cost of Extra Work at Lump Sum $1,095,020.00

CONTRACT CHANGE ORDER

Change Requested by: Engineer

CCO 169	Suppl. No. 0	Contract No. 04 - 0120R4	Road SF-80-12.6/13.2	FED. AID LOC.: ACBRIM-080-1(097)N

Estimated Cost: Increase ☑ Decrease ☐ $1,095,020.00

By reason of this order the time of completion will be adjusted as follows: Deferred

Submitted by

Signature	Resident Engineer	Date
	BILL CASEY	12-11-08

Approval Recommended by

Signature	SFOBB Construction Manager	Date
Michael Forner	MIKE FORNER	12/18/08

Engineer Approval by

Signature	SFOBB Construction Manager	Date
Michael Forner	MIKE FORNER	2/25/09

We the undersigned contractor, have given careful consideration to the change proposed and agree, if this proposal is approved, that we will provide all equipment, furnish the materials, except as may otherwise be noted above, and perform all services necessary for the work above specified, and will accept as full payment therefor the prices shown above.

NOTE: If you, the contractor, do not sign acceptance of this order, your attention is directed to the requirements of the specifications as to proceeding with the ordered work and filing a written protest within the time therein specified.

Contractor Acceptance by

Signature	(Print name and title)	Date
	DANIEL E. HIMICK, PRESIDENT	3/23/09

CONTRACT CHANGE ORDER

Change Requested by: Engineer

CCO 170	Suppl. No. 0	Contract No. 04 - 0120R4	Road SF-80-12.6/13.2	FED. AID LOC.: ACBRIM-080-1(097)N

To: **CC MYERS INC**

You are directed to make the following changes from the plans and specifications or do the following described work not included in the plans and specifications for this contract. ***NOTE: This change order is not effective until approved by the Engineer.***

Description of work to be done, estimate of quantities and prices to be paid. (Segregate between additional work at contract price, agreed price and force account.) Unless otherwise stated, rates for rental of equipment cover only such time as equipment is actually used and no allowance will be made for idle time. This last percentage shown is the net accumulated increase or decrease from the original quantity in the Engineer's Estimate.

Extra Work at Lump Sum:

Perform the following work pertaining to the East Tie-In (ETI) portion of the Temporary Bypass Structure (Bridge No. 34-0006 (TEMP))

Perform the retrofit work for the steel truss modifications at existing YB4 span north and south truss panel points L29 and L33 in accordance with Plan Sheets No. 2 through 3 of Change Order No. 160, and Sheets 3 through 8 of this change order. All revisions to the work shown on Sheets No. 3 through 8 of this change order shall supersede the original plan sheets issued under Change Order No. 160 Sheets 4 through 9. Work includes: all necessary layout; unloading and handling material at the site; removal of existing rivets, nuts and bolts as required; steel drilling and reaming; steel erection and installation; bolt installation, testing, and inspection.

Flagging costs associated with this work shall be paid under Contract Change Order No. 1 with these costs being paid at 50% by the Department. The remaining flagging costs are considered to be included in the lump sum payment made under this change order.

The compensation provided under this change order is based on the work being done on a 10-hour day, 6 days per week schedule in an effort to support the placement of traffic on the Temporary Bypass Structure by September 8, 2009.

For this work, the Contractor will be compensated a lump sum of $413,600.00. This sum constitutes full and final compensation for all costs, including all markups, for the work specified herein.

Compensation for the following items of work pertaining to the erection of the ETI existing steel truss reinforcement have not been addressed by this change order and shall be paid under separate change orders:

1. Fabrication and delivery to the jobsite of all steel plates, brackets, stiffeners and bolts.

2. Costs associated with any work at Pier YB1 or pier YB3.

3. Costs associated with welding inspection; lead abatement; touchup or finish painting; providing access or access platform for the work.

Total Cost of Extra Work at Lump Sum $413,600.00

CONTRACT CHANGE ORDER

Change Requested by: Engineer

CCO 170	Suppl. No. 0	Contract No. 04 - 0120R4	Road SF-80-12.6/13.2	FED. AID LOC.: ACBRIM-080-1(097)N

RECEIVED
011095 OCT -8 09

Estimated Cost: Increase ☑ Decrease ☐ $413,600.00

By reason of this order the time of completion will be adjusted as follows: Deferred

Submitted by

Signature	Resident Engineer	Date
[signature]	BILL CASEY	7-18-09

Approval Recommended by

Signature	Area Construction Manager	Date
Deanna Vilcheck	DEANNA VILCHECK	7/27/09

Engineer Approval by

Signature	Area Construction Manager	Date
Deanna Vilcheck	DEANNA VILCHECK	10/7/09

We the undersigned contractor, have given careful consideration to the change proposed and agree, if this proposal is approved, that we will provide all equipment, furnish the materials, except as may otherwise be noted above, and perform all services necessary for the work above specified, and will accept as full payment therefor the prices shown above.

NOTE: If you, the contractor, do not sign acceptance of this order, your attention is directed to the requirements of the specifications as to proceeding with the ordered work and filing a written protest within the time therein specified.

Contractor Acceptance by

Signature	(Print name and title)	Date
[signature]	DANIEL E. HIMICK, PRESIDENT	10/02/09

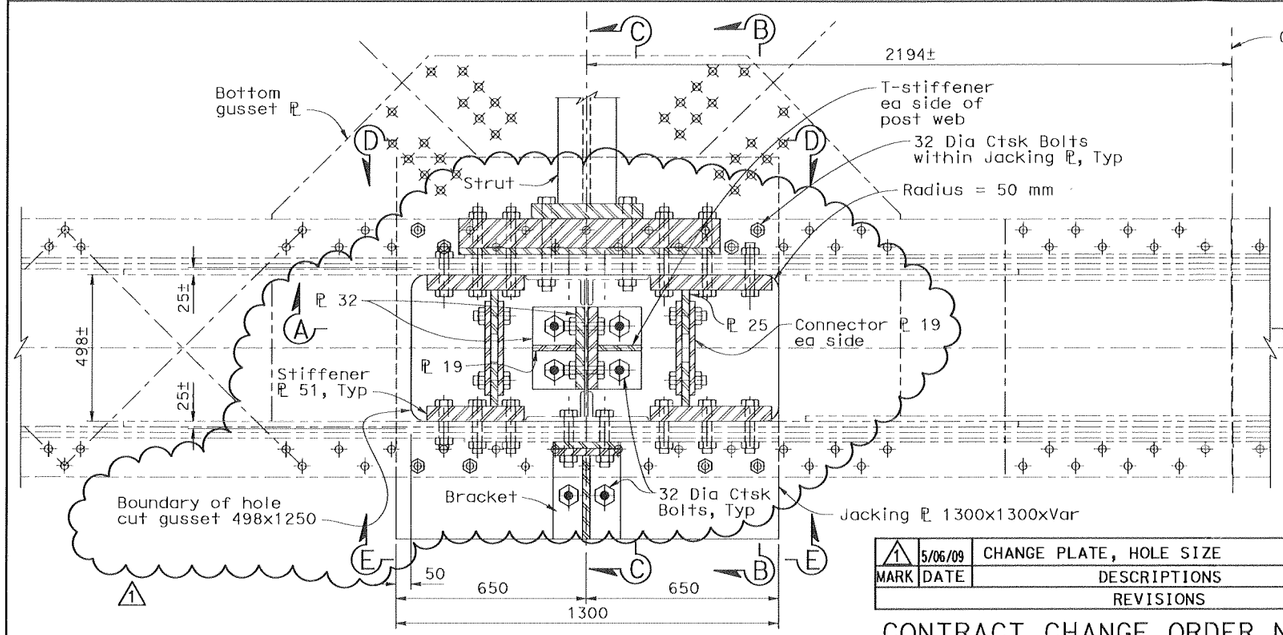

DETAIL 1 - L29 SOUTH TRUSS PLAN

1:10

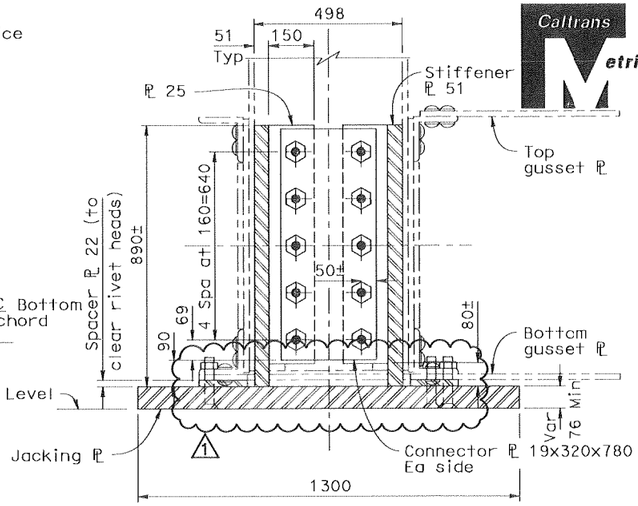

SECTION B-B

1:10

Note: Floor Beam and T-stiffener at post not shown for clarity.

MARK	DATE	DESCRIPTIONS	BY	CH'D	CCO#
1	5/06/09	CHANGE PLATE, HOLE SIZE	CR	SS	
REVISIONS					

CONTRACT CHANGE ORDER NO. 170
SHEET 3 OF 8

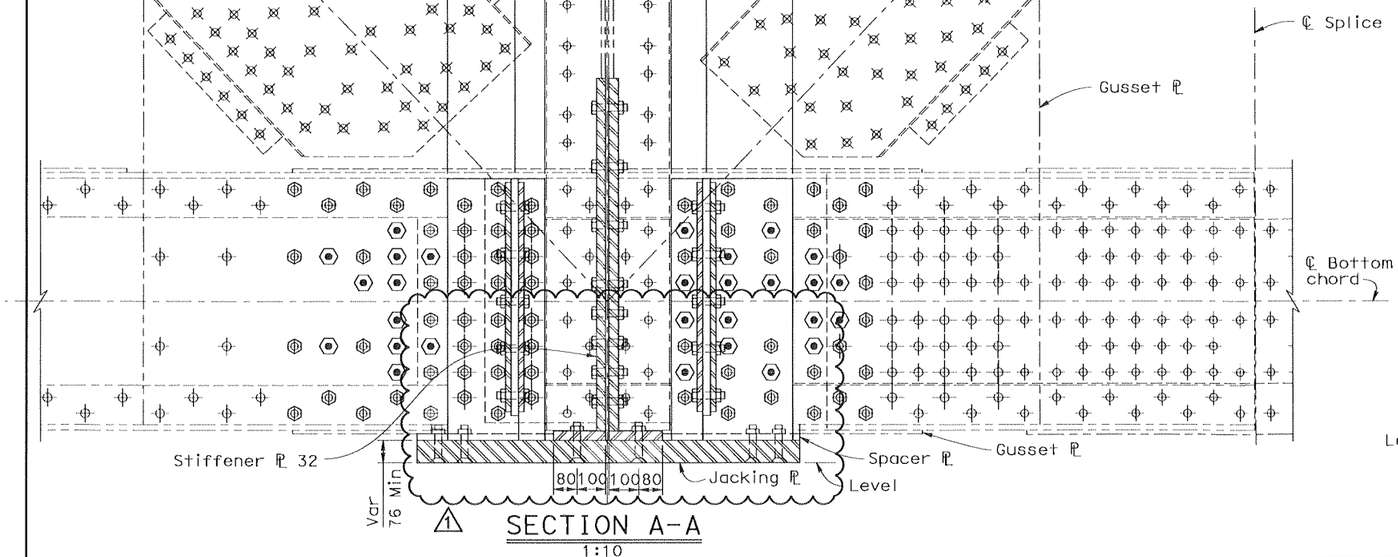

SECTION A-A

1:10

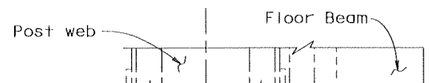

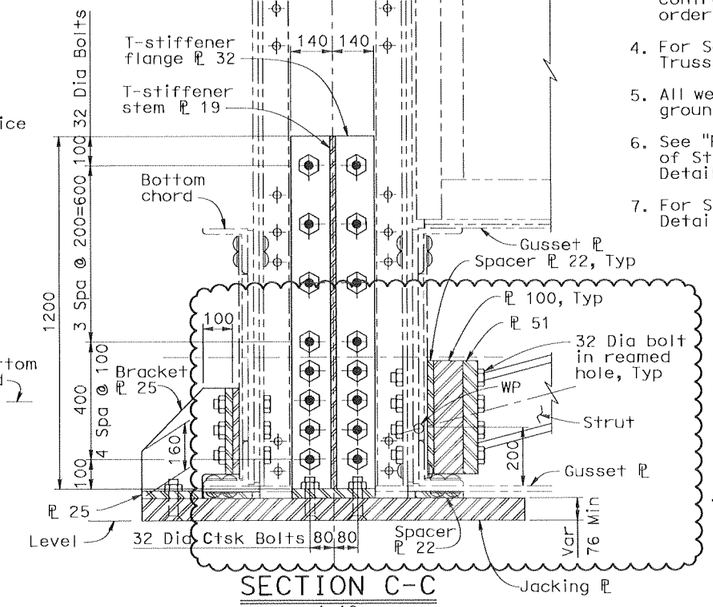

SECTION C-C

1:10

ALL DIMENSIONS ARE IN MILLIMETERS UNLESS OTHERWISE SHOWN

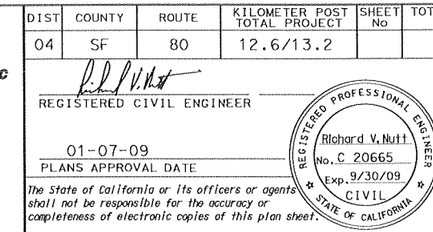

DIST	COUNTY	ROUTE	KILOMETER POST TOTAL PROJECT	SHEET No	TOTAL
04	SF	80	12.6/13.2		

REGISTERED CIVIL ENGINEER

01-07-09
PLANS APPROVAL DATE

REGISTERED PROFESSIONAL ENGINEER
Richard V. Nutt
No. C 20665
Exp. 9/30/09
CIVIL
STATE OF CALIFORNIA

The State of California or its officers or agents shall not be responsible for the accuracy or completeness of electronic copies of this plan sheet.

T.Y.LIN / MOFFATT & NICHOL
Two Harrison Street, Suite 500
San Francisco, CA 94105

LEGEND

- o Existing rivet to remain
- ⬡ Remove rivet, replace with bolt
- ⬢ Add new bolt
- ——— Indicates Existing Structure
- ▨ Indicates New Steel

Notes:

1. All bolts are A490. Threads shall be excluded from shear plane.
2. All bolts are 25 Dia unless noted otherwise.
3. The Contractor shall verify all controlling field dimensions before ordering or fabricating any material.
4. For Section D-D and E-E, see "Existing Truss Details No. 5" sheet.
5. All welds for stiffeners are CJP welds ground flush, unless noted otherwise.
6. See "Proposed Procedure for Installation of Stiffeners" in "Existing Truss Details No. 5A" sheet.
7. For Strut details, see "Existing Truss Details No. 5A" sheet.

100% PS&E

FILE => p:\bb\04-012001\eti\jackpt-det-exist 04-29-09\aetd01.dgn
TIME PLOTTED => 3:53:36 PM
DATE PLOTTED => 5/6/2009
USERNAME => pzhao

DESIGN OVERSIGHT		DESIGN	BY R. Nutt, S. Singh	CHECKED C. Redfield
SIGN OFF DATE		DETAILS	BY A. Sudhausen	CHECKED P. Zhao
		QUANTITIES	BY A. Lee	CHECKED H. Nelson

PREPARED FOR THE STATE OF CALIFORNIA DEPARTMENT OF TRANSPORTATION

M. Sah, PROJECT ENGINEER
S. Abbas, PROJECT MANAGER
CU EA 0120R4

BRIDGE NO. 34-0006 (TEMP)
KILOMETER POST 12.6

SAN FRANCISCO OAKLAND BAY BRIDGE EAST SPAN SEISMIC SAFETY PROJECT

EAST TIE-IN

EXISTING TRUSS DETAILS NO. 1

DESIGN DETAIL SHEET (METRIC) (REV. 3/1/98) ⊕DATE⊕ ⊕TIME⊕ Pen Table File

ORIGINAL SCALE IN MILLIMETERS FOR REDUCED PLANS 0 10 20 30 40 50 60 70 80 90 100

DISREGARD PRINTS BEARING EARLIER REVISION DATES

REVISION DATES (PRELIMINARY STAGE ONLY): 11/05/07 8/20/08 01/07/09 05/06/09

SHEET 122R1 OF 214

FILE => p:\bb\04-012001\eti\jackpt-det-exist 04-29-09\aetd01.dgn

DIST	COUNTY	ROUTE	KILOMETER POST TOTAL PROJECT	SHEET No.	TOTAL
04	SF	80	12.6/13.2		

REGISTERED CIVIL ENGINEER

01-07-09
PLANS APPROVAL DATE

REGISTERED PROFESSIONAL ENGINEER — Richard V. Nutt — No. C 20665 — Exp. 9/30/09 — CIVIL — STATE OF CALIFORNIA

The State of California or its officers or agents shall not be responsible for the accuracy or completeness of electronic copies of this plan sheet.

T.Y. LIN / MOFFATT & NICHOL
Two Harrison Street, Suite 500
San Francisco, CA 94105

LEGEND

- o Existing rivet to remain
- ⬡ Remove rivet, replace with bolt
- ⬢ Add new bolt
- ——— Indicates Existing Structure
- ▨ Indicates New Steel

MARK	DATE	REVISIONS	BY	CH'D	CCO#
1	5/06/09	CHANGE PLATE, HOLE SIZE	CR	SS	

CONTRACT CHANGE ORDER NO. 170
SHEET 4 OF 8

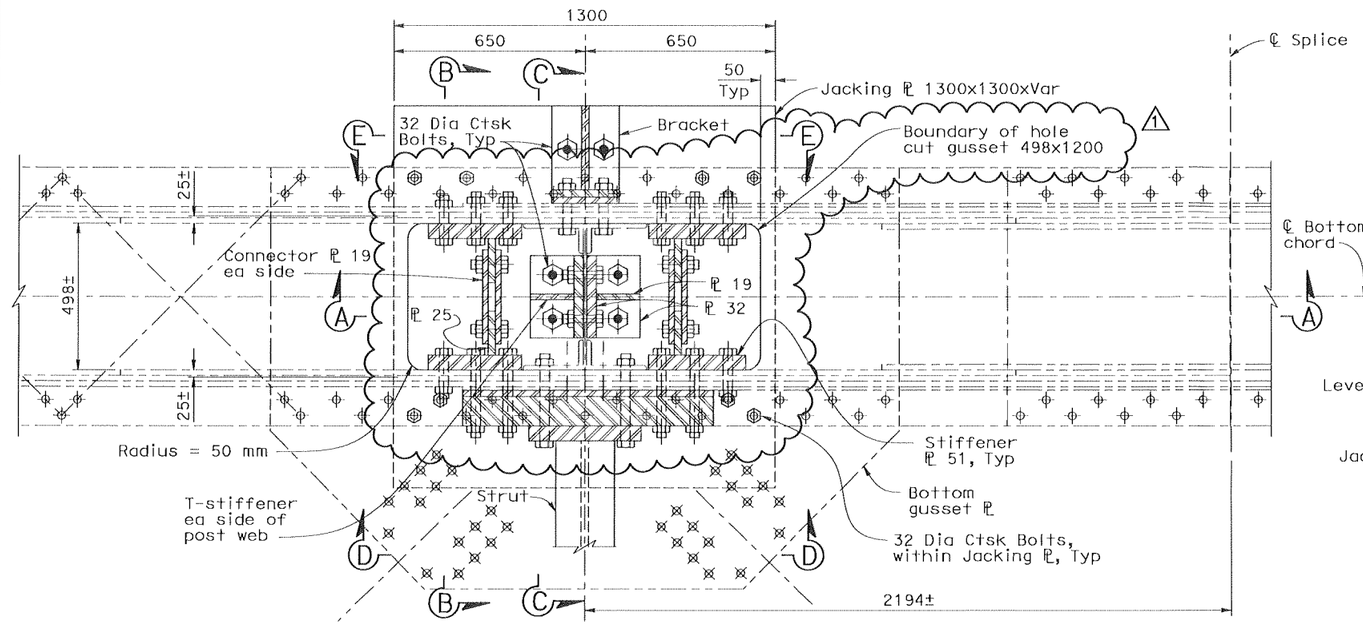

L29 NORTH TRUSS PLAN

Detail 1 Similar

1:10

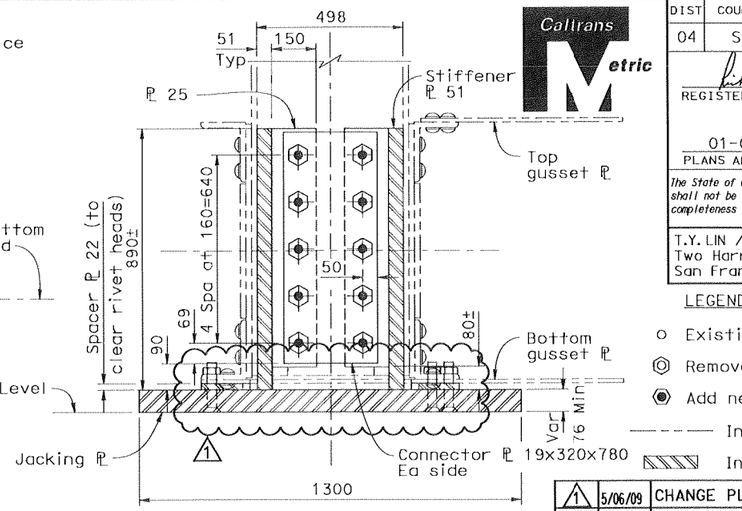

SECTION B-B

1:10

Note: Floor Beam and T-stiffener at post not shown for clarity.

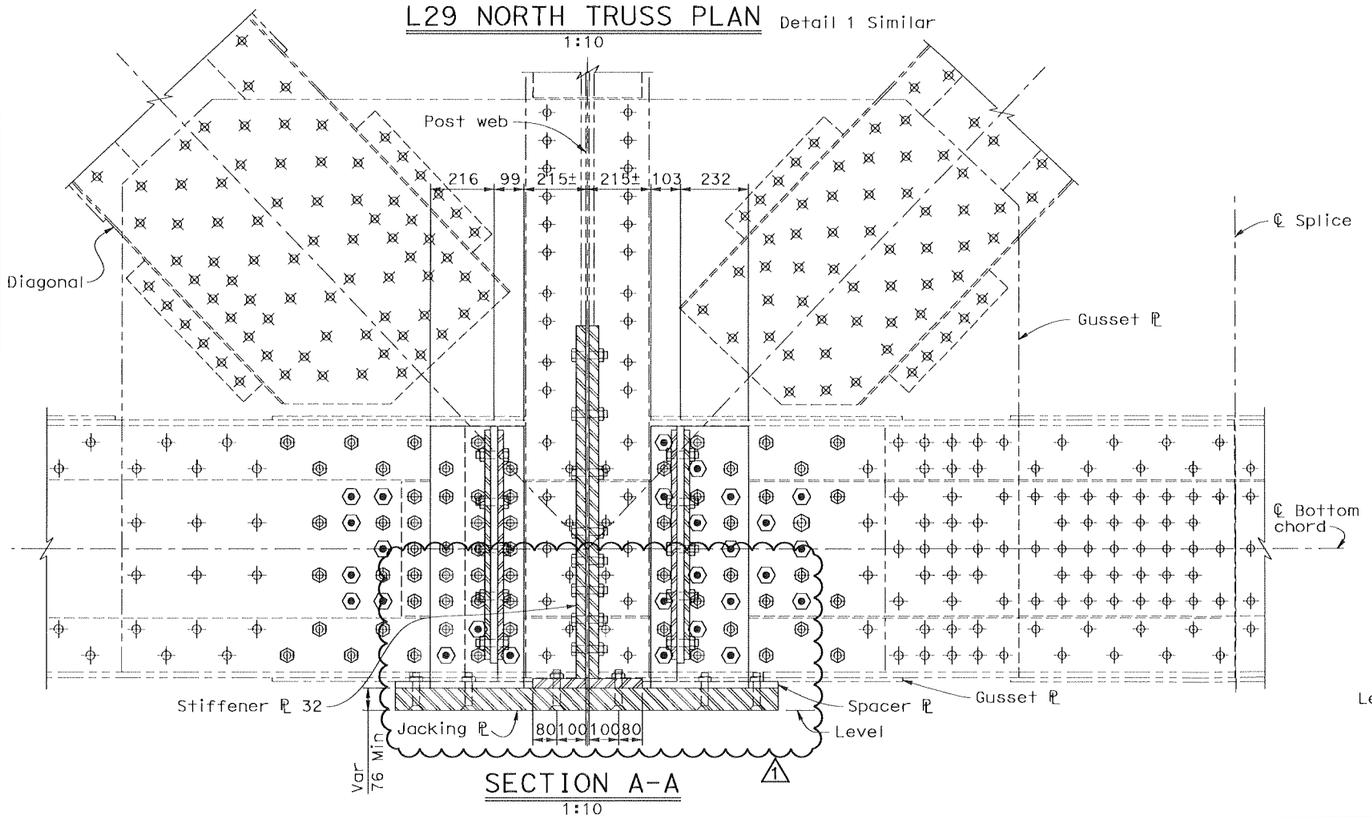

SECTION A-A

1:10

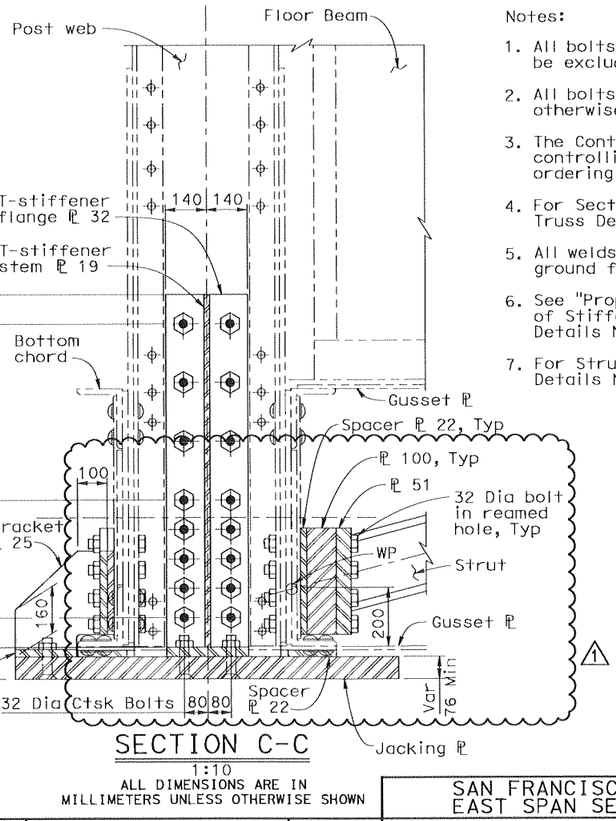

SECTION C-C

1:10

ALL DIMENSIONS ARE IN MILLIMETERS UNLESS OTHERWISE SHOWN

Notes:

1. All bolts are A490. Threads shall be excluded from shear plane.
2. All bolts are 25 Dia unless noted otherwise.
3. The Contractor shall verify all controlling field dimensions before ordering or fabricating any material.
4. For Section D-D and E-E, see "Existing Truss Details No. 5" sheet.
5. All welds for stiffeners are CJP welds ground flush, unless noted otherwise.
6. See "Proposed Procedure for Installation of Stiffeners" in "Existing Truss Details No. 5A" sheet.
7. For Strut details, see "Existing Truss Details No. 5A" sheet.

100% PS&E

DESIGN OVERSIGHT

SIGN OFF DATE

DESIGN	BY R. Nutt, S. Singh	CHECKED C. Redfield	
DETAILS	BY A. Sudhausen	CHECKED P. Zhao	
QUANTITIES	BY A. Lee	CHECKED H. Nelson	

PREPARED FOR THE STATE OF CALIFORNIA DEPARTMENT OF TRANSPORTATION

M. Sah
PROJECT ENGINEER
S. Abbas
PROJECT MANAGER

CU
EA 0120R4

BRIDGE NO. 34-0006 (TEMP)
KILOMETER POST 12.6

SAN FRANCISCO OAKLAND BAY BRIDGE
EAST SPAN SEISMIC SAFETY PROJECT

EAST TIE-IN

EXISTING TRUSS DETAILS NO. 2

DESIGN DETAIL SHEET (METRIC) (REV. 3/1/98)
⊕DATE⊕ ⊕TIME⊕ Pen Table File

ORIGINAL SCALE IN MILLIMETERS FOR REDUCED PLANS 0 10 20 30 40 50 60 70 80 90 100

DISREGARD PRINTS BEARING EARLIER REVISION DATES →

REVISION DATES (PRELIMINARY STAGE ONLY): 11/09/07 | 8/20/08 | 01/07/09 | 05/06/09

SHEET 123R1 OF 214

FILE => p:\bb\04-012001\eti\jackpt-det-exist 04-29-09\detd02.dgn

USERNAME => pzhao DATE PLOTTED => 5/6/2009 TIME PLOTTED => 3:53:39 PM

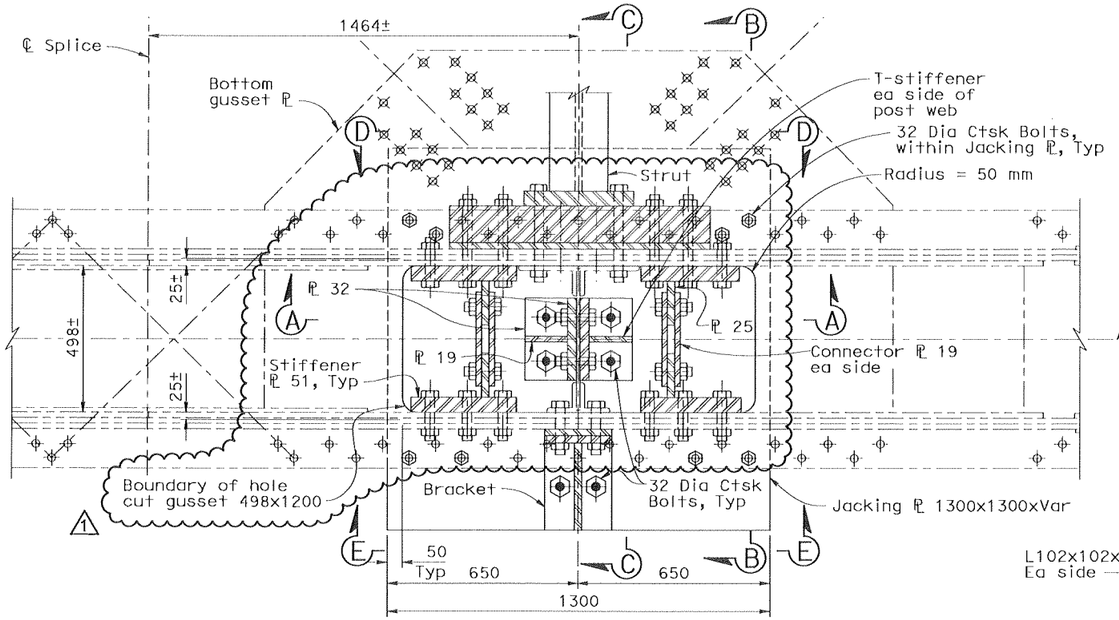

L33 SOUTH TRUSS PLAN

Detail 1 Similar

1:10

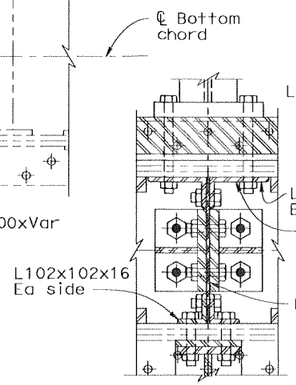

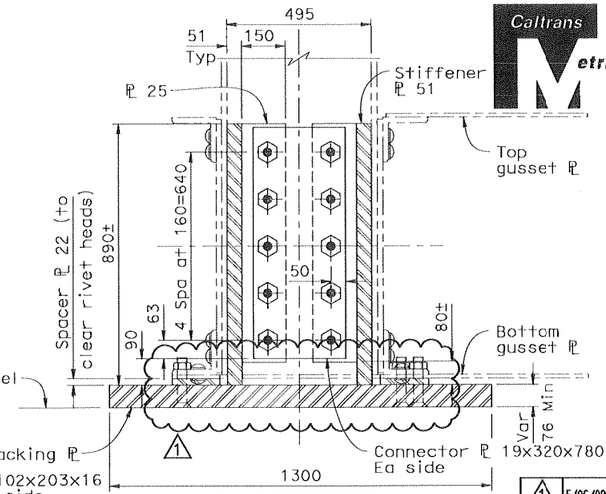

SECTION B-B

1:10

Note: Floor Beam and T-stiffener at post not shown for clarity.

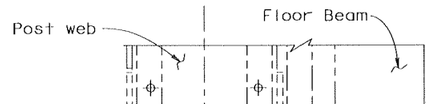

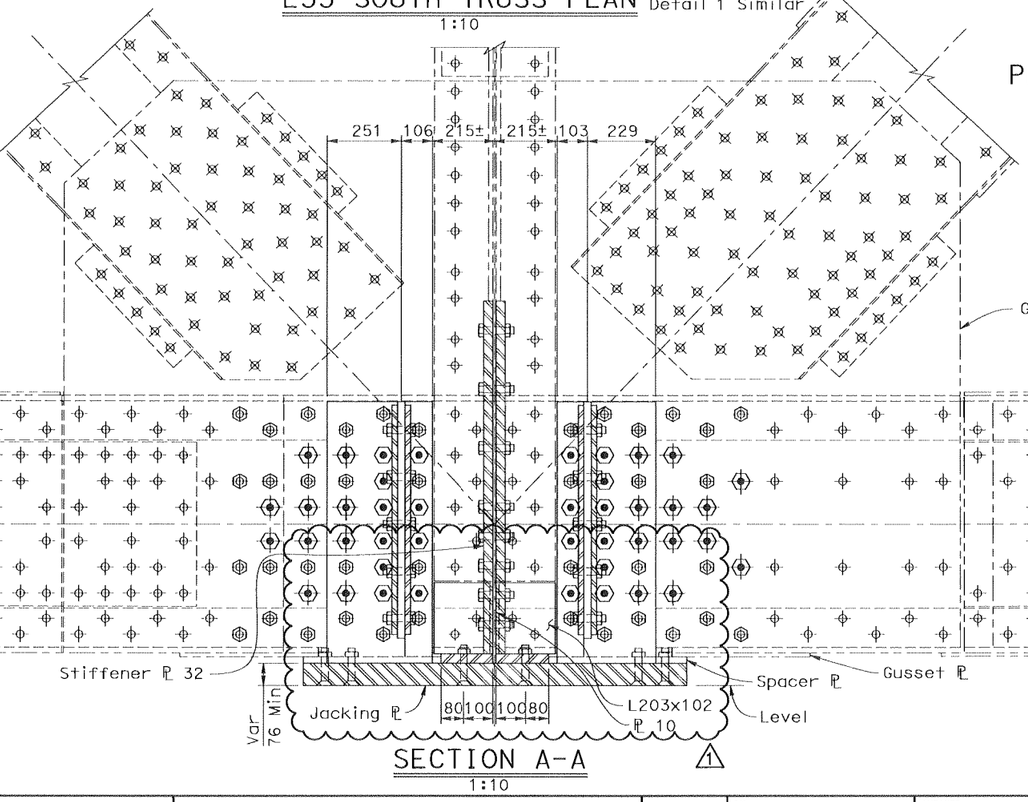

SECTION A-A

1:10

PLAN 150mm ABOVE JACKING PLATE

1:10

For balance of detailing see L33S plan

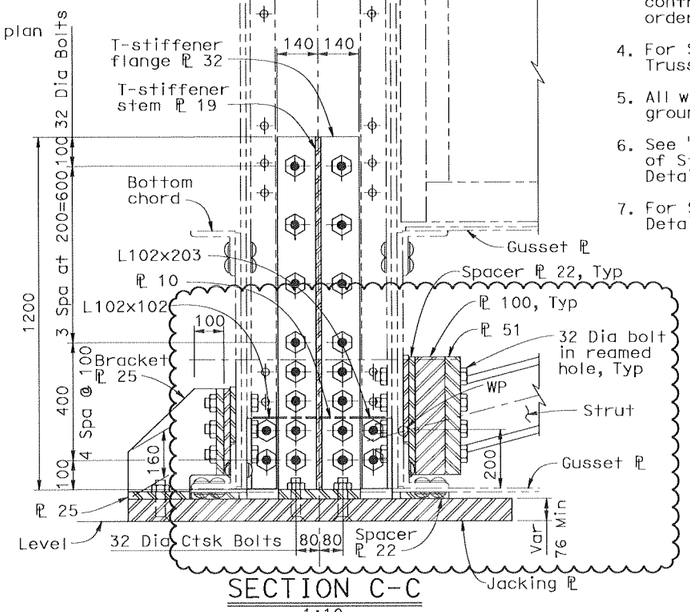

SECTION C-C

1:10

ALL DIMENSIONS ARE IN MILLIMETERS UNLESS OTHERWISE SHOWN

DIST	COUNTY	ROUTE	KILOMETER POST TOTAL PROJECT	SHEET No	TOTAL
04	SF	80	12.6/13.2		

REGISTERED CIVIL ENGINEER

01-07-09
PLANS APPROVAL DATE

The State of California or its officers or agents shall not be responsible for the accuracy or completeness of electronic copies of this plan sheet.

REGISTERED PROFESSIONAL ENGINEER — Richard V. Nutt — No. C 20665 — Exp. 9/30/09 — CIVIL — STATE OF CALIFORNIA

T.Y. LIN / MOFFATT & NICHOL
Two Harrison Street, Suite 500
San Francisco, CA 94105

LEGEND

- o Existing rivet to remain
- ⬡ Remove rivet, replace with bolt
- ⬢ Add new bolt
- ——— Indicates Existing Structure
- ▨ Indicates New Steel

MARK	DATE	REVISIONS	BY	CH'D	CCO#
1	5/06/09	CHANGE PLATE, HOLE SIZE	CR	SS	

CONTRACT CHANGE ORDER NO. 170
SHEET 5 OF 8

Notes:

1. All bolts are A490. Threads shall be excluded from shear plane.
2. All bolts are 25 Dia unless noted otherwise.
3. The Contractor shall verify all controlling field dimensions before ordering or fabricating any material.
4. For Section D-D and E-E, see "Existing Truss Details No. 5" sheet.
5. All welds for stiffeners are CJP welds ground flush, unless noted otherwise.
6. See "Proposed Procedure for Installation of Stiffeners" in "Existing Truss Details No. 5A" sheet.
7. For Strut details, see "Existing Truss Details No. 5A" sheet.

100% PS&E

FILE => p:\bb\04-012001\eti\jackpt-det-exist 04-29-09\aetd03.dgn
TIME PLOTTED => 3:53:43 PM
DATE PLOTTED => 5/6/2009
USERNAME => pzhao

DESIGN OVERSIGHT
SIGN OFF DATE

	BY	CHECKED
DESIGN	R. Nutt, S. Singh	C. Redfield
DETAILS	A. Sudhausen	P. Zhao
QUANTITIES	A. Lee	H. Nelson

PREPARED FOR THE STATE OF CALIFORNIA
DEPARTMENT OF TRANSPORTATION

M. Sah
PROJECT ENGINEER
S. Abbas
PROJECT MANAGER

CU
EA 0120R4

BRIDGE NO. 34-0006 (TEMP)
KILOMETER POST 12.6

SAN FRANCISCO OAKLAND BAY BRIDGE
EAST SPAN SEISMIC SAFETY PROJECT

EAST TIE-IN

EXISTING TRUSS DETAILS NO. 3

DESIGN DETAIL SHEET (METRIC) (REV. 3/1/98)
●DATE● ●TIME● Pen Table File

ORIGINAL SCALE IN MILLIMETERS FOR REDUCED PLANS 0 10 20 30 40 50 60 70 80 90 100

DISREGARD PRINTS BEARING EARLIER REVISION DATES →

REVISION DATES (PRELIMINARY STAGE ONLY): 11/09/07 | 8/20/08 | 01/07/09 | 05/06/09

SHEET 124R1 OF 214

FILE => p:\bb\04-012001\eti\jackpt-det-exist 04-29-09\aetd03.dgn

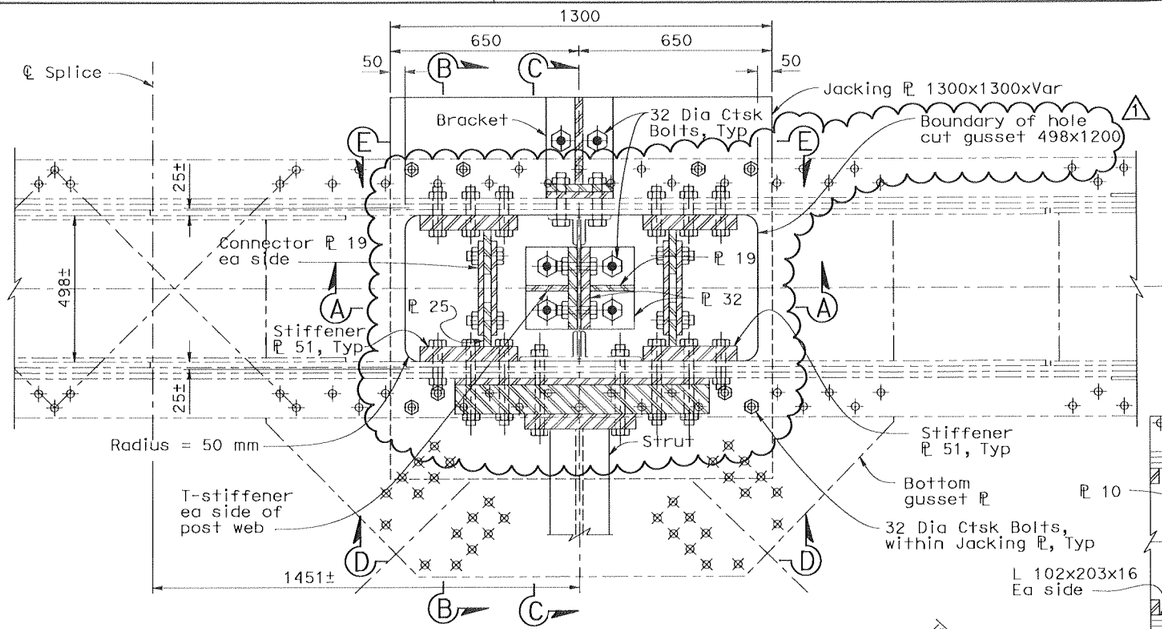

L33 NORTH TRUSS PLAN

Detail 1 Similar

1:10

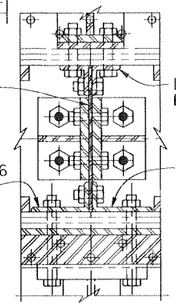

PLAN 150mm ABOVE JACKING PLATE

1:10

For balance of detailing see L33N plan

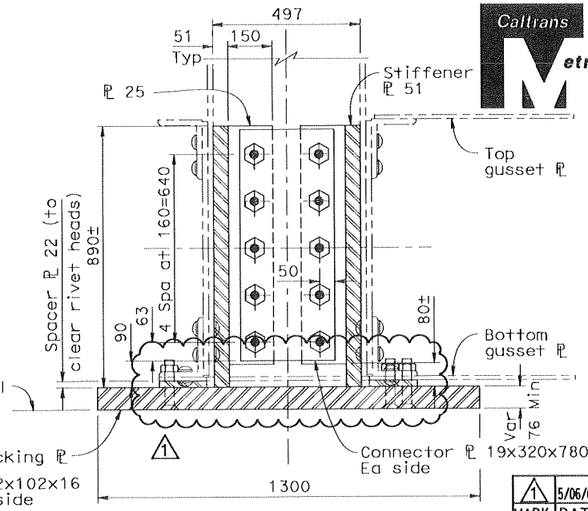

SECTION B-B

1:10

Note: Floor Beam and T-stiffener at post not shown for clarity.

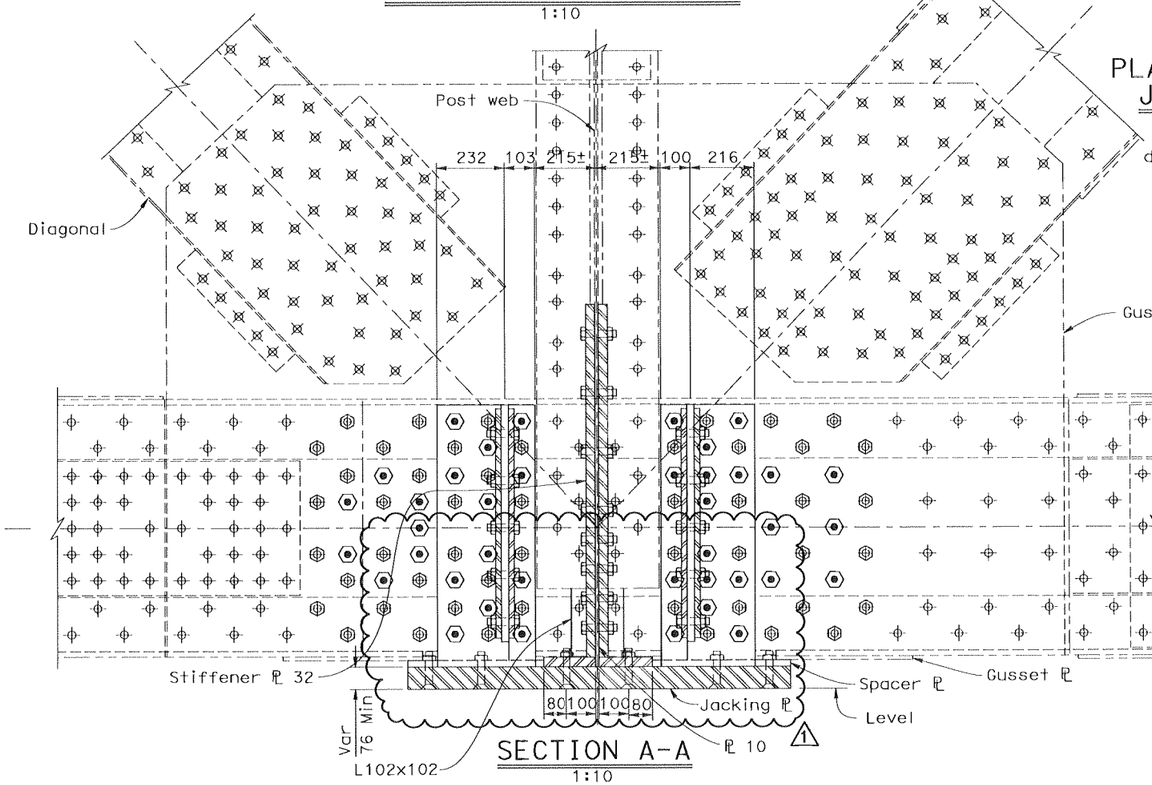

SECTION A-A

1:10

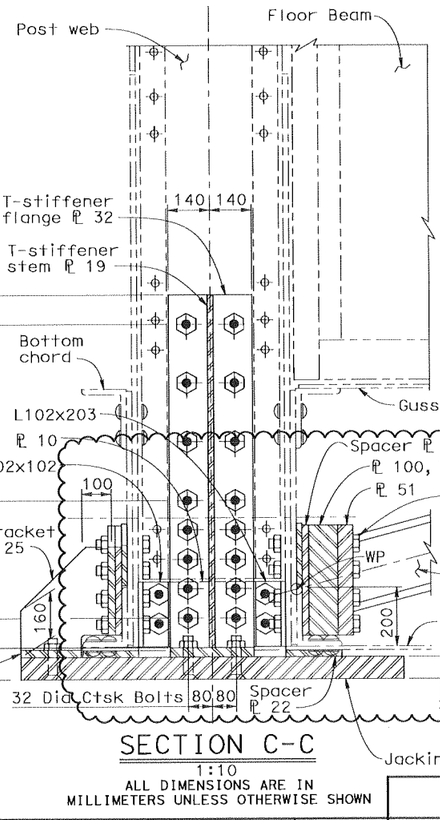

SECTION C-C

1:10

ALL DIMENSIONS ARE IN MILLIMETERS UNLESS OTHERWISE SHOWN

Notes:

1. All bolts are A490. Threads shall be excluded from shear plane.
2. All bolts are 25 Dia unless noted otherwise.
3. The Contractor shall verify all controlling field dimensions before ordering or fabricating any material.
4. For Section D-D and E-E, see "Existing Truss Details No. 5" sheet.
5. All welds for stiffeners are CJP welds ground flush, unless noted otherwise.
6. See "Proposed Procedure for Installation of Stiffeners" in "Existing Truss Details No. 5A" sheet.
7. For Strut details, see "Existing Truss Details No. 5A" sheet.

DIST	COUNTY	ROUTE	KILOMETER POST TOTAL PROJECT	SHEET No	TOTAL
04	SF	80	12.6/13.2		

REGISTERED CIVIL ENGINEER

01-07-09
PLANS APPROVAL DATE

Richard V. Nutt, No. C 20665, Exp. 9/30/09, CIVIL, STATE OF CALIFORNIA, REGISTERED PROFESSIONAL ENGINEER

The State of California or its officers or agents shall not be responsible for the accuracy or completeness of electronic copies of this plan sheet.

T.Y. LIN / MOFFATT & NICHOL
Two Harrison Street, Suite 500
San Francisco, CA 94105

LEGEND

- o Existing rivet to remain
- ⬡ Remove rivet, replace with bolt
- ⬢ Add new bolt
- ——— Indicates Existing Structure
- ▨ Indicates New Steel

MARK	DATE	DESCRIPTIONS / REVISIONS	BY	CH'D	CCO#
1	5/06/09	CHANGE PLATE, HOLE SIZE	CR	SS	

CONTRACT CHANGE ORDER NO. 170
SHEET 6 OF 8

100% PS&E

FILE => p:\bb\04-012001\eti\jackpt-det-exist 04-29-09\aetd04.dgn
TIME PLOTTED => 3:53:47 PM
DATE PLOTTED => 5/6/2009
USERNAME => pznco

DESIGN OVERSIGHT				
SIGN OFF DATE				
DESIGN	BY R. Nutt, S. Singh	CHECKED C. Redfield	PREPARED FOR THE STATE OF CALIFORNIA DEPARTMENT OF TRANSPORTATION	M. Sah, PROJECT ENGINEER; S. Abbas, PROJECT MANAGER
DETAILS	BY A. Sudhausen	CHECKED P. Zhao		
QUANTITIES	BY A. Lee	CHECKED H. Nelson		

CU EA 0120R4

BRIDGE NO. 34-0006 (TEMP)
KILOMETER POST 12.6

SAN FRANCISCO OAKLAND BAY BRIDGE EAST SPAN SEISMIC SAFETY PROJECT

EAST TIE-IN

EXISTING TRUSS DETAILS NO. 4

DESIGN DETAIL SHEET (METRIC) (REV. 3/1/98)
⊕DATE⊕ ⊕TIME⊕ Pen Table File

ORIGINAL SCALE IN MILLIMETERS FOR REDUCED PLANS 0 10 20 30 40 50 60 70 80 90 100

DISREGARD PRINTS BEARING EARLIER REVISION DATES →

REVISION DATES (PRELIMINARY STAGE ONLY): 11/20/07 | 8/20/08 | 01/07/09 | 05/06/09

SHEET 125R1 OF 214

FILE => p:\bb\04-012001\eti\jackpt-det-exist 04-29-09\aetd04.dgn

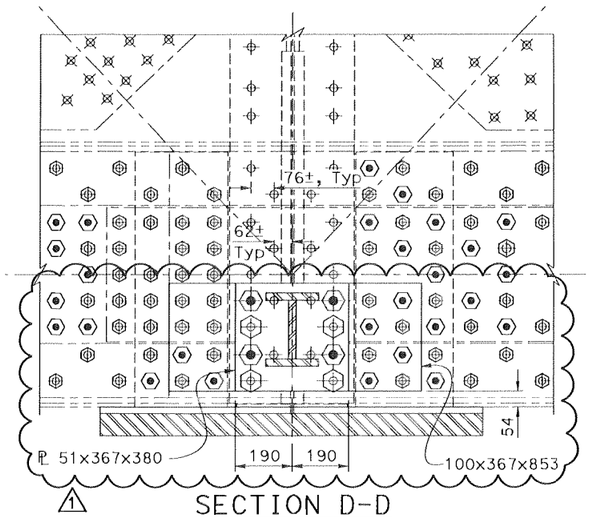

SECTION D-D
1:10

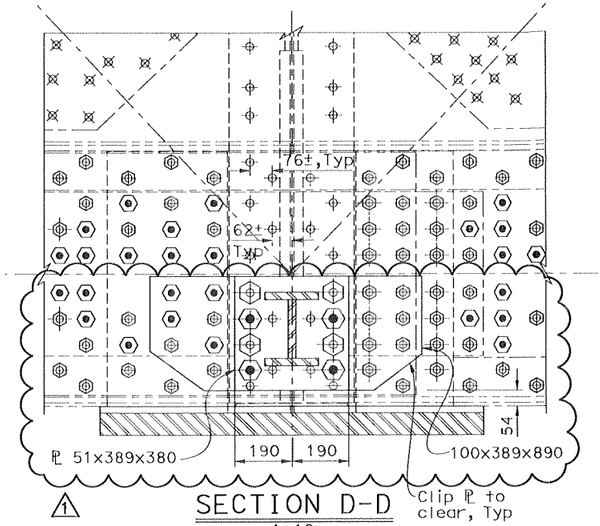

SECTION D-D
1:10

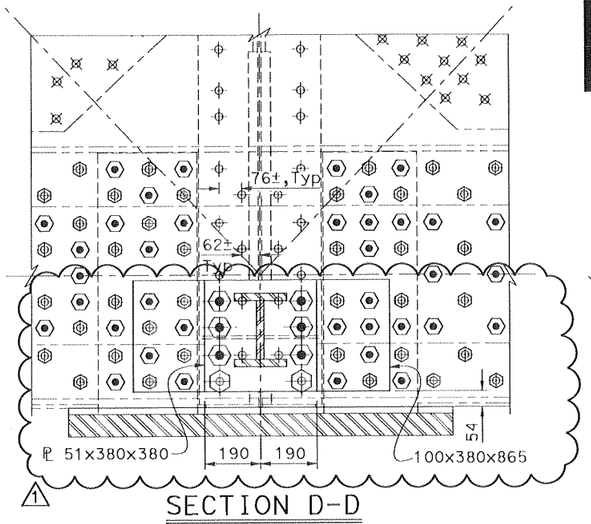

SECTION D-D
1:10

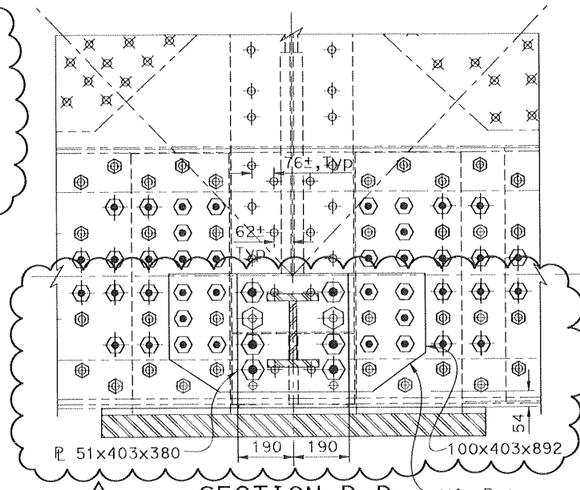

SECTION D-D
1:10

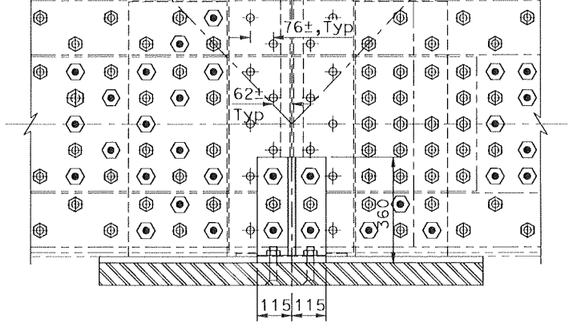

SECTION E-E
1:10

SECTION AT L29 NORTH TRUSS

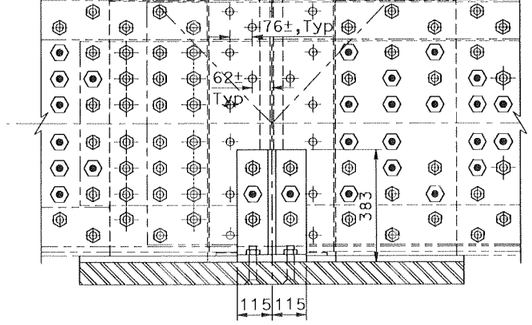

SECTION E-E
1:10

SECTION AT L29 SOUTH TRUSS

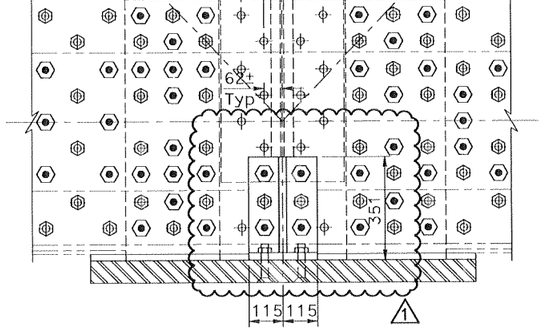

SECTION E-E
1:10

SECTION AT L33 NORTH TRUSS

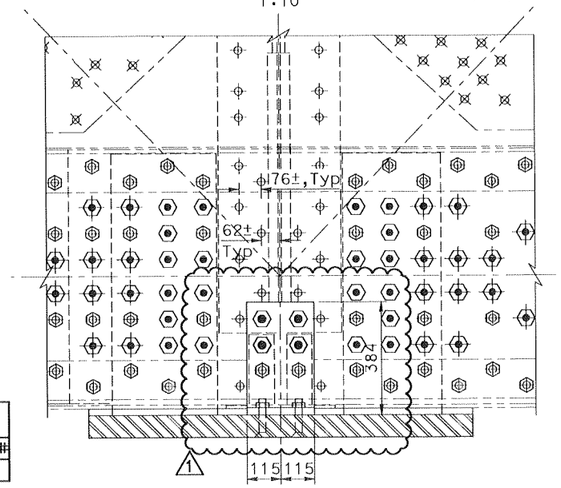

SECTION E-E
1:10

SECTION AT L33 SOUTH TRUSS

Notes:

1. All bolts are A490. Threads shall be excluded from shear plane.
2. All bolts are 25 Dia unless noted otherwise.
3. The Contractor shall verify all controlling field dimensions before ordering or fabricating any material.

LEGEND

- o Existing rivet to remain
- Remove rivet, replace with bolt
- Add new bolt
- ——— Indicates Existing Structure
- Indicates New Steel

MARK	DATE	DESCRIPTIONS	BY	CH'D	CCO#
		REVISIONS			
1	05/06/09	CHANGE PLATE, HOLE SIZE	SS	AML	

CONTRACT CHANGE ORDER NO. 170
SHEET 7 OF 8

DIST	COUNTY	ROUTE	KILOMETER POST TOTAL PROJECT	SHEET No	TOTAL
04	SF	80	12.6/13.2		

Caltrans Metric

REGISTERED CIVIL ENGINEER

01-07-09
PLANS APPROVAL DATE

REGISTERED PROFESSIONAL ENGINEER — Richard V. Nutt, No. C 20665, Exp. 9/30/09, CIVIL, STATE OF CALIFORNIA

The State of California or its officers or agents shall not be responsible for the accuracy or completeness of electronic copies of this plan sheet.

T.Y. LIN / MOFFATT & NICHOL
Two Harrison Street, Suite 500
San Francisco, CA 94105

100% PS&E

FILE => p:\bb\04-012001\eti\jackpt-det-exist 04-29-09\aetd05R.dgn
TIME PLOTTED => 3:53:53 PM
DATE PLOTTED => 5/6/2009
USERNAME => pzhao

ALL DIMENSIONS ARE IN MILLIMETERS UNLESS OTHERWISE SHOWN

SAN FRANCISCO OAKLAND BAY BRIDGE
EAST SPAN SEISMIC SAFETY PROJECT

EAST TIE-IN

EXISTING TRUSS DETAILS NO. 5

	BY	CHECKED
DESIGN	R. Nutt, S. Singh	C. Redfield
DETAILS	A. Sudhausen	P. Zhao
QUANTITIES	A. Lee	H. Nelson

PREPARED FOR THE STATE OF CALIFORNIA
DEPARTMENT OF TRANSPORTATION

M. Sah
PROJECT ENGINEER
S. Abbas
PROJECT MANAGER

BRIDGE NO. 34-0006 (TEMP)
KILOMETER POST 12.6

CU
E.A 0120R4

DESIGN OVERSIGHT
SIGN OFF DATE

DESIGN DETAIL SHEET (METRIC) (REV. 3/1/98)
@DATE@ @TIME@ Pen Table File

ORIGINAL SCALE IN MILLIMETERS FOR REDUCED PLANS 0 10 20 30 40 50 60 70 80 90 100

DISREGARD PRINTS BEARING EARLIER REVISION DATES →

REVISION DATES (PRELIMINARY STAGE ONLY): 11/09/07 | 8/20/08 | 01/07/09 | 05/06/09

SHEET 126R1 OF 214

FILE => p:\bb\04-012001\eti\jackpt-det-exist 04-29-09\aetd05R.dgn

DIST	COUNTY	ROUTE	KILOMETER POST TOTAL PROJECT	SHEET No	TOTAL
04	SF	80	12.6/13.2		

REGISTERED CIVIL ENGINEER

01-07-09
PLANS APPROVAL DATE

Richard V. Nutt
No. C 20665
Exp. 9/30/09
CIVIL
STATE OF CALIFORNIA

The State of California or its officers or agents shall not be responsible for the accuracy or completeness of electronic copies of this plan sheet.

T.Y. LIN / MOFFATT & NICHOL
Two Harrison Street, Suite 500
San Francisco, CA 94105

Procedure for Installation of Stiffeners

1. Prior to installation of bolts or stiffeners at the jacking points at L29 and L33, sand blast clean all paint at the jacking locations and lower flange of the floor beams as shown in "Existing Truss Details" sheets.
2. All stiffener installation shall be completed prior to roll out roll in.
3. Install all bolts in chords that do not require removal of rivets. Use long erection bolts (A490) and nuts at stiffener locations with heads installed on the outside face of the chords.
4. Once Step 3 is complete, replace rivets in the chords (except those at the stiffeners) as follows: Remove a maximum of 2 rivets at any time, ream holes and install bolts. Repeat this process until all bolt replacements in the chords have been installed.
5. Repeat the process described in Step 4 to replace rivets at the stiffeners. At stiffener locations use long erection bolts and nuts with the heads installed on the outside face of the chords.
6. Cut an opening in the bottom gusset as shown. The Contractor shall ensure that no element of the truss is damaged.
7. Install two short L 102x102 and two short L 102x203 and connecting web plate directly above area for jacking plate at L33N, L33S. Install bolt with heads installed on the inside face to receive brackets at a later stage.
8. Cut out the eight rivets in the bottom flange angles for connecting the jacking plate.
9. Lift and install the jacking plate with spacer plates with 8 countersunk bolts to the flanges of the truss.
10. Install T-stiffeners at each side of the post web bearing directly onto the jacking plate below. Drill holes and install bolts to the jacking plate and the post web.
11. Install brackets on outside of bottom chord with spacer plates, bearing onto jacking plate. Remove rivets, ream rivet holes, drill new holes, and install bolts.
12. Install the 51 mm vertical stiffener plates on each side of the post. Install only one stiffener at a time as follows:
    a. Install stiffener bearing directly onto the jacking plate below.
    b. Provide a positive means to retain the heads of the erection bolts.
    c. Remove nuts from all the long erection bolts at the stiffener being replaced. In the earlier operations, all the nuts were installed on the inside face of the chord.
    d. Once the stiffener is in place, tighten all nuts for the bolts at that stiffener.
    e. Remove erection bolts one by one and replace with new bolts (Type A) with bolt head installed towards the inside of the chord except at locations where the 100 mm plate for strut is connected. See "Long Bolt Details".
    f. Completely install all four stiffener plates, one by one, at each jacking point.
13. Install strut to floor beam on inside of bottom chord with spacer plates using the following procedure:
    a. Remove rivets, ream rivet holes and drill new holes at the bottom chord connection.
    b. Replace rivets with bolts, one at a time, at each end of the bracket area along the lower flange of the floor beam (Stage 1 and 2).
    c. Extract 6 rivets at front end of the bracket area (Stage 3). Replace with spacer plate and half of the bracket assembly. Tighten bolts to the floor beam above.
    d. Extract 6 rivets at back end of the bracket area (Stage 4). Replace with spacer plate and half of the bracket assembly. Tighten bolts to the floor beam above.
    e. Install splice plates on each side of the bracket web.
    f. Remove only the erection bolts left previously at locations where the 100 mm plate for strut is connected to 51 mm stiffener plate. Install strut with shims and new bolts to lower chord end using Type B and Type C bolts. See "Long Bolt Details".
    g. Complete strut connection to floor beam bracket with shims and bolts.
14. Install connector plate between the stiffener plates.

LEGEND

- o Existing rivet to remain
- Remove rivet, replace with bolt
- Add new bolt
- ———— Indicates Existing Structure
- Indicates New Steel

MARK	DATE	DESCRIPTIONS	BY	CH'D	CCO#
1	5/06/09	CHANGE PLATE, HOLE SIZE	CR	SS	
REVISIONS					

CONTRACT CHANGE ORDER NO. 170
SHEET 8 OF 8

Notes:

1. All bolts are A490. Threads shall be excluded from shear plane.
2. The Contractor shall verify all controlling field dimensions before ordering or fabricating any material.

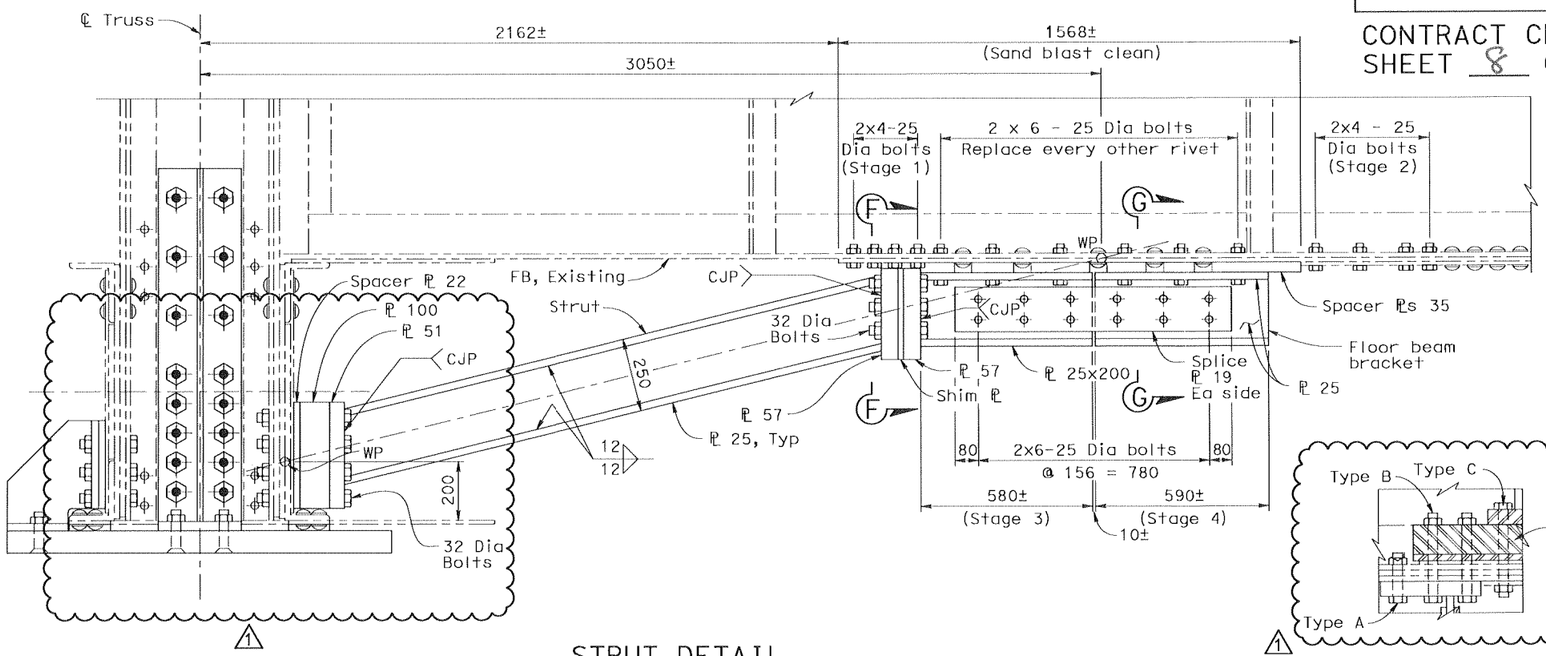

STRUT DETAIL
1:10

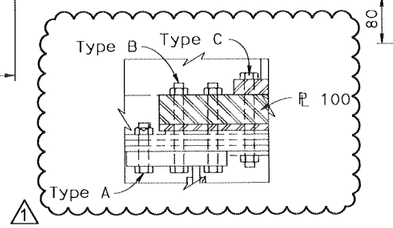

LONG BOLT DETAILS
1:10

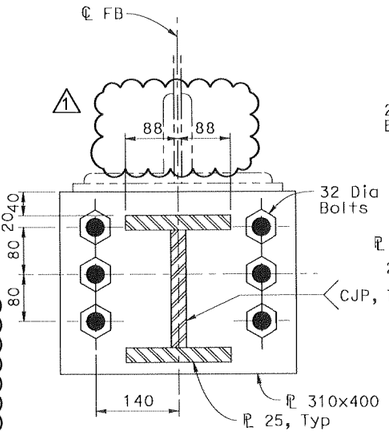

SECTION F-F
1:5

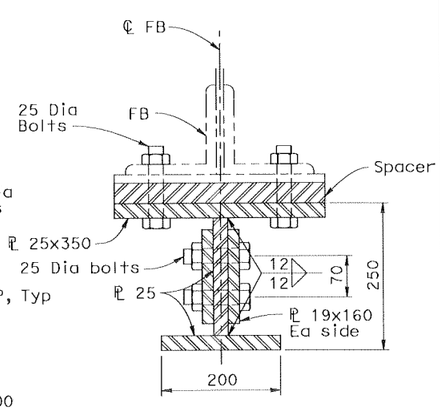

SECTION G-G
1:5

ALL DIMENSIONS ARE IN MILLIMETERS UNLESS OTHERWISE SHOWN

SAN FRANCISCO OAKLAND BAY BRIDGE
EAST SPAN SEISMIC SAFETY PROJECT

EAST TIE-IN

EXISTING TRUSS DETAILS NO. 5A

DESIGN	R. Nutt, S. Singh	C. Redfield	
DETAILS	A. Sudhausen	P. Zhao	
QUANTITIES	A. Lee	H. Nelson	

DESIGN OVERSIGHT
SIGN OFF DATE

PREPARED FOR THE STATE OF CALIFORNIA DEPARTMENT OF TRANSPORTATION

M. Sah, PROJECT ENGINEER
S. Abbas, PROJECT MANAGER

BRIDGE NO. 34-0006 (TEMP)
KILOMETER POST 12.6

CU 0120R4
EA 0120R4

DISREGARD PRINTS BEARING EARLIER REVISION DATES →

REVISION DATES (PRELIMINARY STAGE ONLY): 11/05/07 | 8/20/08 | 01/07/09 | 05/06/09

SHEET 126AR1 OF 214

DESIGN DETAIL SHEET (METRIC) (REV. 3/1/98)
@DATE@ @TIME@ Pen Table File

ORIGINAL SCALE IN MILLIMETERS FOR REDUCED PLANS 0 10 20 30 40 50 60 70 80 90 100

FILE => p:\bb\04-012001\eti\jackpt-det-exist 04-29-09\aetd05a.dgn

FILE => p:\bb\04-012001\eti\jackpt-det-exist 04-29-09\aetd05a.dgn
TIME PLOTTED => 3:53:50 PM
DATE PLOTTED => 5/6/2009
USERNAME => pzhao

STATE OF CALIFORNIA - DEPARTMENT OF TRANSPORTATION

CONTRACT CHANGE ORDER MEMORANDUM

DATE: 7/2/2009 Page 1 of 2

TO: MIKE FORNER / DEANNA VILCHECK	FILE: E.A. 04 - 0120R4
	CO-RTE-PM SF-80-12.6/13.2
FROM: BILL CASEY	FED. NO. ACBRIM-080-1(097)N
CCO#: **170** SUPPLEMENT#: **0** Category Code: **CHPA**	CONTINGENCY BALANCE (incl. this change) **$33,916,245.59**
COST: **$413,600.00** INCREASE ☑ DECREASE ☐	HEADQUARTERS APPROVAL REQUIRED? ☑ YES ☐ NO
SUPPLEMENTAL FUNDS PROVIDED: **$0.00**	IS THIS REQUEST IN ACCORDANCE WITH ENVIRONMENTAL DOCUMENTS? ☑ YES ☐ NO
CCO DESCRIPTION: Steel Erection for Existing YB4 Mods	**PROJECT DESCRIPTION:** CONSTRUCT ROUTE 80 TEMP BYPASS STRUCTURE

Original Contract Time:	Time Adj. This Change:	Previously Approved CCO Time Adjustments:	Percentage Time Adjusted: (including this change)	Total # of Unreconciled Deferred Time CCO(s): (including this change)
475 Day(s)	**DEF** Day(s)	**1195** Day(s)	**252** %	**8**

THIS CHANGE ORDER PROVIDES FOR:

Compensating the contractor for the erection of structural steel materials required to reinforce the existing Truss YB-4 for the East Tie-In (ETI) structure.

This project, the Yerba Buena Island Detour (YBID), calls for the construction of a temporary detour for both eastbound and westbound I-80 traffic that will allow for the tie in of the new east span of the San Francisco Oakland Bay Bridge to Yerba Buena Island. The YBID encompasses three main structures, the East Tie-In to the existing bridge, the West Tie-In (WTI) to Yerba Buena Island, and the Viaduct structure between the two tie ins. The contract was awarded as a performance-based project with the contractor responsible for meeting the design criteria specified in the contract.

The Department issued a December 14, 2006 memo entitled Strategy for South-South Detour Contract Completion which was approved by Tony Anziano (Toll Bridge Program Manager), Richard Land (Chief Engineer) and subsequently by the TBPOC. This memo recommended that the design of the ETI structure be assumed by the Department as opposed to the as-bid performance based contractor design. Based on this memorandum, the design of the structure was changed from a design that incorporated the existing steel truss bridge with the new structure to a design that replaces the existing structure with a new structure (roll out / roll in).

In January 2009, Toll Bridge design provided design drawings to provide additional stability to existing spans YB1, YB2, and YB4 to permit the planned roll out during the Labor Day traffic switch to the YBID. CCO No. 160 was issued to provide compensation for the fabrication and delivery of the materials, and CCO NO. 93-S1 was issued to provide compensation for the lead paint abatement for this work. The design drawings were modified May 6, 2009. This CCO will provide compensation to the contractor for the field erection required at span YB4.

Compensation for this change shall be for an agreed lump sum cost of $413,600.00, which will be financed through the Contingency fund. A cost analysis is in the project files.

Adjustment of contract time is deferred pending completion of the work specified in this change as it may become the controlling operation in accordance with Section 8-1.07 "Liquidated Damages", of the Standard Specifications and Section 10-1.20 "Time Related Overhead (TRO)" of the Special Provisions.

Compensation for delays resulting from this work will be made in accordance with Section 8-1.09 "Right of Way Delays" of the Standard Specifications and Section 10-1.20 "Time Related Overhead" of the Special Provisions.

This change was requested by Mike Whiteside - YBI Coordination Engineer, per Memoranda dated January 22, 2009 and May 7, 2009 and concurred with by Alec Melkonians - Asst. Project Manager and Hong Wong - Project Engineer.

Maintenance concurrence is not required, as this work does not affect any permanent roadway features.

ADA Notice: For individuals with sensory disabilities, this document is available in alternate formats. For information call: (916) 654-6410 or TDD (916) 654-3880 or write Records and Forms Management, 1120 N Street, MS-89, Sacramento, CA 95814.

CONCURRED BY:			
Construction Engineer:	Bill Casey, Resident Engineer	Date	7-23-09
Bridge Engineer:	Mike Whiteside, Toll Bridge Design	Date	5/7/09
Project Engineer:	Hong Wong, PE	Date	7/13/09
Project Manager:	Alec Melkonians	Date	7/7/09
FHWA Rep.:		Date	
Environmental:		Date	
Other (specify):		Date	
Other (specify):		Date	
District Prior Approval By:		Date	
HQ (Issue Approve) By:	Bob Molera, HQ CCO Engineer	Date	7-31-09
Resident Engineer's Signature:		Date	7-23-09

ESTIMATE OF COST

	THIS REQUEST	TOTAL TO DATE
ITEMS	$0.00	$0.00
FORCE ACCOUNT	$0.00	$0.00
AGREED PRICE	$413,600.00	$413,600.00
ADJUSTMENT	$0.00	$0.00
TOTAL	$413,600.00	$413,600.00

FEDERAL PARTICIPATION

☐ PARTICIPATING ☐ PARTICIPATING IN PART ☑ NONE
☐ NON-PARTICIPATING (MAINTENANCE) ☐ NON-PARTICIPATING

FEDERAL SEGREGATION (if more than one Funding Source or P.I.P. type)
☐ CCO FUNDED PER CONTRACT ☐ CCO FUNDED AS FOLLOWS

FEDERAL FUNDING SOURCE	PERCENT

ADA Notice: For individuals with sensory disabilities, this document is available in alternate formats. For information call: (916) 654-6410 or TDD (916) 654-3880 or write Records and Forms Management, 1120 N Street, MS-89, Sacramento, CA 95814.

CONTRACT CHANGE ORDER

Change Requested by: Engineer

CCO 171	Suppl. No. 0	Contract No. 04 - 0120R4	Road SF-80-12.6/13.2	FED. AID LOC.: ACBRIM-080-1(097)N

To: **CC MYERS INC**

You are directed to make the following changes from the plans and specifications or do the following described work not included in the plans and specifications for this contract. ***NOTE: This change order is not effective until approved by the Engineer.***

Description of work to be done, estimate of quantities and prices to be paid. (Segregate between additional work at contract price, agreed price and force account.) Unless otherwise stated, rates for rental of equipment cover only such time as equipment is actually used and no allowance will be made for idle time. This last percentage shown is the net accumulated increase or decrease from the original quantity in the Engineer's Estimate.

Extra Work at Lump Sum:

Perform all work shown on the plan sheets and specifications of Pages No. 3 through 23 of this change order for the roll out of the Span YB4 steel truss of the existing structure (Bridge No. 33-0025) and the roll in of the steel truss of the East Tie-In portion of the Temporary Bypass Structure (Bridge No. 34-0006 (TEMP)).

Compensation paid under this change order includes all costs associated with the following 4 items of work:

1) Furnishing, installing, and removing all equipment and material necessary to perform the roll out and roll in operations in accordance with the plans and specifications of this change order and the approved shop drawings (Listed as SAP No: 7000043592; Project No: 0010026943-P038-D) pertaining to the roll out and roll in operations as issued by Mammoet USA Inc. and as authorized by the Engineer. This work includes but is not limited to furnishing and installing the skid shoes, skid tracks, and skid assembly; push pull units; tow bars; hydraulic jacks; and all appurtenances.

2) Furnishing and installing the 8 structural steel supports installed between the bottom chord and the skid beam for both the YB4 and ETI trusses necessary for the roll out and roll in operations in accordance with the plans and specifications of this change order and the approved shop drawings (Listed as SAP No: 7000043592; Project No: 0010026943-P038-D) pertaining to the roll out and roll in operations as issued by Mammoet USA Inc. and as authorized by the Engineer. This work includes but is not limited to furnishing and installing all distribution, stability, transverse and haunch beams; all pot bearings, plates and shims; all support brackets; and all appurtenances.

3) Performing the actual roll out and roll in operations of the YB4 and ETI steel truss spans except for any costs specifically excluding in this change order.

4) All costs incurred by Mammoet USA Inc. concerning the roll out of the existing Span YB4 and the roll in of the new steel truss of the East Tie-In.

For this work, the Contractor shall be compensated a lump sum of $10,147,370.00. Except for the items of work specifically excluded in this change order, this sum constitutes full and final compensation, including all markups, for all costs associated with the work of this change.

All costs associated with the following 7 items of work are excluded from this change order:

1) Support costs concerning work to be performed by C.C. Myers Inc. and their steel erection subcontractor Danny's Construction Co., Inc. during the actual roll in and roll out operations of the YB4 and ETI steel truss spans to be performed during the extended weekend closure of the San Francisco Oakland Bay Bridge.

2) The removal of the 8 structural steel supports installed between the bottom chord and the skid beam for both the YB4 and ETI trusses as defined by Item 2 in the above section.

3) Furnishing and installing concrete barrier and placing pavement delineation for the ETI truss after the structure is rolled into its permanent alignment.

4) Furnishing and installing the Bent 52A and Pier E1 expansion joints and expansion joint steel barriers.

5) Furnishing and installing the Bent 52A and Pier E1 permanent bearings.

CONTRACT CHANGE ORDER

Change Requested by: Engineer

CCO 171	Suppl. No. 0	Contract No. 04 - 0120R4	Road SF-80-12.6/13.2	FED. AID LOC.: ACBRIM-080-1(097)N

6) Any costs associated with the actual closure of the San Francisco Oakland Bay Bridge.

7) Work associated with the implementation and maintenance of the Contractor's Storm Water Pollution Prevention Plan and erosion control, including concrete washouts.

Any costs associated with these 7 items of work shall be paid under separate change orders.

Flagging costs associated with this work shall be paid under Change Order No. 1 with these costs being paid at 50% by the Department. The remaining flagging costs are considered to be included in the lump sum compensation provided under this change order.

The compensation provided under this change order is based on the roll out and roll in operations being performed over during the full closure of the San Francisco Oakland Bay Bridge beginning at 8:00 PM on September 3, 2009 and ending no later than 5:00 AM on September 8, 2009.

Consideration of a time adjustment will be deferred until completion of the work specified herein. Determination of a commensurate time extension will be made in accordance with Section 8-1.07, "Liquidated Damages", of the Standard Specifications and Section 10-1.20 "Time Related Overhead (TRO)" of the Special Provisions.

Compensation for delays resulting from this work will be made in accordance with Section 8-1.09 "Right of Way Delays" of the Standard Specifications and Section 10-1.20 "Time Related Overhead" of the Special Provisions.

Total Cost of Extra Work at Lump Sum $10,147,370.00

All payment clauses contained within the specifications cited under this change order are superseded by the agreed lump sum payment method specified above.

Estimated Cost: Increase ☑ Decrease ☐ **$10,147,370.00**

By reason of this order the time of completion will be adjusted as follows: Deferred

Submitted by

Signature	Resident Engineer BILL CASEY	Date 6-4-09

Approval Recommended by

Signature	SFOBB Construction Manager MIKE FORNER	Date 6-5-09

Engineer Approval by

Signature	SFOBB Construction Manager MIKE FORNER	Date 6-9-09

We the undersigned contractor, have given careful consideration to the change proposed and agree, if this proposal is approved, that we will provide all equipment, furnish the materials, except as may otherwise be noted above, and perform all services necessary for the work above specified, and will accept as full payment therefor the prices shown above.

NOTE: **If you, the contractor, do not sign acceptance of this order, your attention is directed to the requirements of the specifications as to proceeding with the ordered work and filing a written protest within the time therein specified.**

Contractor Acceptance by

Signature	(Print name and title) DANIEL E. HAMICK, PRESIDENT	Date 6/08/09

10-1.__ MOVE BRIDGE

Move bridge shall consist of rolling-out the existing bridge superstructure and rolling-in the new bridge superstructure. This shall include jacking, moving and lowering bridge superstructure to new support locations in conformance with the details shown on the plans and these special provisions.

The roll-out roll-in system comprises all elements from the top of the skid beam top flange to the underside of the truss structures including but not limited to pickup systems, longitudinal translation system and provision of appropriate tolerances.

The Contractor shall design, furnish, operate, monitor and remove the jacking and support system with appurtenant items as necessary to jack, move and lower the structure in a controlled manner.

The Contractor's roll-out roll-in system shall conform to the controlling dimensions as shown on the plans. The roll-out roll-in system shall move the bridge superstructure such that the distance between the top flange of the skid beam and the bottom chord of the superstructure does not exceed the dimension shown on the plans.

The Contractor shall ensure that the roll-out roll-in system does not create eccentricities of loading on any element of the new structure, the existing structure or the skid beams that exceeds the allowable limits shown on the plans.

The construction sequence and application of jacking loads shall be as shown on the plans. Proposed changes to the construction sequence and application of jacking loads shall be subject to the Engineer's approval.

Proposed changes shall be coordinated with the Engineer to ensure that all elements required by the roll-out roll-in system are incorporated in a timely manner into the skid beam, permanent structure and existing YB4 span designs.

Attention is directed to Section "Maintaining Traffic" and "Falsework" of these special provisions.

The Contractor shall provide a designated field engineer who is registered as a Civil Engineer in the State California. The Contractor's designated field engineer shall be present at the jobsite throughout the moving operations.

INTEGRATED PROCEDURE MANUAL

The Contractor shall submit to the Engineer an integrated procedure manual for moving the bridge. The manual shall be signed by a representative of the Contractor and each subcontractor involved in the roll-out roll-in operation. The Contractor shall submit 6 copies of the draft manual for review and approval by the Engineer 6 months prior to the roll-out roll-in date. Final copies of the integrated procedure manual, revised to address the Engineer's review comments, shall be furnished in accordance with these special provisions. The integrated procedure manual shall incorporate all installation manuals produced for other items of work related to the roll-out roll-in. Attention is directed to "Pot Bearings," and "Lead Rubber Bearings," of these special provisions regarding bearing installation manuals.

The integrated procedure manual shall include a detailed schedule of activities, location of activities, personnel, communication plan, equipment, structure tolerance, risk management plan, and access for the Engineer to construction activities. Attention is directed to Section 5-1.08, "Inspection," of the Standard Specifications.

The integrated procedure manual shall include, but is not limited to the following:

Personnel

Personnel involved in the roll-out roll-in shall be listed with duties and responsibilities described.

Training plans shall be prepared for specific roll-out roll-in activities. Personnel involved in each training activity shall be listed. Dates and locations of training activities shall be listed. The Engineer may attend training activities.

Communication Plan

The communication plan shall include contact information for project personnel, an organizational chart, and correspondence protocols. Persons of responsible charge for specific activities shall be identified and the scheduled periods of their activities during roll-out roll-in operation.

The communication plan shall outline how the Contractor and all subcontractors will coordinate and remain in contact with each other and the Engineer during the roll-out roll-in operation. Division of work shall be identified, including lead and contact personnel for each activity.

Equipment

Equipment to be utilized during roll-out roll-in shall be identified. The Contractor shall provide the following:

A. Equipment list, function, and location during the roll-out roll-in.
B. Transportation and placement of equipment. Mobilization and movement during roll-out roll-in shall be described (example: how to get it up on/under the structure)
C. Equipment tolerance.
D. Methods to determine measurements (indexing)
E. Accuracy of all measurements
F. Methods to determine differential displacements, including thermal movements of the East Tie-in truss.
G. Methods of assuring synchronized movements.
H. Methods of ensuring equipment is in tolerance or approaching out-of-tolerance
I. Storage and transport of equipment on site prior to roll-out roll-in.
J. Available spare parts and equipment. Storage and use shall be identified.
K. Method of moving spare parts and equipment if needed during roll-out roll-in (example: Procedures for change a skid shoe if it becomes necessary)
L. Restrictions on the placement of the jacking shoes under the trusses so as to avoid excess eccentricities

Structure Tolerance

The Contractor shall coordinate with the Engineer to determine the maximum allowable differential displacements of the existing span YB4 and the East Tie-In truss. The Contractor shall identify corrective measures to be used when differential displacements exceed the maximum allowed. Attention is directed to "Construction Surveying," of these special provisions.

Risk Management Plan

A comprehensive risk management plan shall be a prepared for the roll-out roll-in operation. The risk management plan shall identify technical, schedule, and resource risks that could

jeopardize the roll-out roll-in schedule, quality of finished product, or safety. The Contractor shall describe how the highest priority items identified will be managed to reduce risk.

A partial list of risks include, but is not limited to the following:

A. Adverse weather conditions during roll-out roll-in. Conditions that would prohibit proceeding with the roll-out roll-in shall be identified, including a warning system for when conditions approach levels which would prohibit the roll-out roll-in.
B. Equipment failure.
C. Extreme temperature immediately prior to or during roll-out roll-in which would affect materials or equipment to be used.
D. Serious injury or loss of life.
E. Excessive differential displacements.

The integrated procedure manual shall be in the possession of each representative throughout the roll-out roll-in operation.

BRIDGE MOVE WORKING DRAWINGS

The Contractor shall submit to the Engineer working drawings and design calculations for moving bridge. Such drawings and design calculations shall be signed by an engineer who is registered as a Civil Engineer in the State of California.

In addition to the requirements in Section 51-1.06A, "Falsework Design and Drawings," of the Standard Specifications, bridge move working drawings shall include the following:

A. Complete description and details of methods, equipment and sequence for jacking, moving and lowering the structure in a safe and controlled manner.
B. Complete details of methods, equipment and sequence of operations to achieve final lines and grades relative to the existing structure as shown on the plans
C. Complete scheduling of all aspects of the roll-out roll-in operations
D. Description, location, and value of all loads including construction equipment loads
E. Details for:

    1. Connections between the jacking system and the structure, including anchor bolt layouts
    2. Jacking system with appurtenant items
    3. Vertical and horizontal displacement monitoring system, control points, and schedule for taking measurements
    4. Modification to the falsework for the jacking and moving operation
    5. Restoration of the structure after removal of the jacking system.

F. Contingency plans for the roll-out roll-in system to ensure that the work will be successfully completed in the required time period.
G. Design calculations for:

    1. Connections between the jacking system and the structure
    2. Stresses in the structure due to jacking and moving operations
    3. Lateral stiffness of the jacking and moving system
    4. Modification to the falsework for the jacking operation

H. Name of the Contractor's designated field engineer

After complete working drawings and all supporting data are submitted, the Contractor shall allow 4 weeks for the Engineer's review of each submittal.

The design load for jacking bridge shall consist of the largest combined load demand from the following:

A. The dead load of the superstructure, horizontal loads, and loads shown on the plans
B. The proposed jacking forces
C. The dead loads and live loads due to the Contractor's equipment and operations

Approval by the Engineer of the bridge move working drawings or bridge move inspection performed by the Engineer will in no way relieve the Contractor of full responsibility for moving bridge.

The Contractor's registered engineer shall be present at the bridge site at all times when jacking operations or adjustments are in progress. Should an unplanned event occur, the Contractor's registered engineer shall submit immediately to the Engineer for approval, the procedure or proposed operation to correct or remedy the occurrence.

The Contractor shall perform an initial survey as part of the displacement monitoring system to record the location of the superstructure at control points prior to commencement of moving operations. Two copies of the survey shall be signed by an engineer, who is registered as a Civil Engineer in the State of California, and submitted to the Engineer.

MOVING OPERATIONS

Jacking and moving operations shall be carefully controlled and monitored to ensure that the jacking loads are applied simultaneously to prevent distortion and excessive stresses that would damage the structure.

A redundant system of supports shall be provided during the entire jacking and moving operations for backup should any of the jacks fail. The redundant support system shall permit the bridge superstructure to be set down at any point along the skid beams and permit the removal of a failed jack and its replacement with a new jack.

Adequate means shall be employed to prevent unplanned lateral and longitudinal movement of the superstructure. The jacking and support system and the superstructure shall be stable during all phases of the operation.

The Contractor shall perform a test lift of the superstructure to verify uniform lifting at all lift points. The differential displacements between lifting points shall not exceed 25 mm during the lift and during moving operations. The Contractor shall use a displacement measurement system that will provide continuous real time monitoring of vertical and horizontal displacements of the superstructure during jacking and moving operations. This information shall be continuously displayed on a monitor hooked up to the displacement measurement system. The records of vertical and horizontal displacement shall be signed by an engineer who is registered as a Civil Engineer in the State of California and available to the Engineer at the jobsite, and a copy of the record shall be delivered to the Engineer at the completion of the work.

Should unanticipated displacements, cracking or other damage occur, the operation shall be discontinued until corrective measures satisfactory to the Engineer are performed. Damage to the structure as a result of the Contractor's operations shall be repaired by the Contractor in conformance with the provisions in Section 7-1.11, "Preservation of Property," of the Standard Specifications.

Manufactured Assemblies

Manufactured assemblies shall conform to the provisions in Section 51-1.06A(2), "Design Stresses, Loadings, and Deflections," of the Standard Specifications and these special provisions.

Each jack shall be equipped with either a pressure gage or a load cell for determining the jacking force. Pressure gages shall have an accurately reading dial at least 150 mm in diameter. Each jack shall be calibrated by a private laboratory approved by the Transportation Laboratory within 6 months prior to use and after each repair. Each jack and its gage shall be calibrated as a unit with the cylinder extension in the approximate position that it will be at final jacking force and shall be accompanied by a certified calibration chart. Load cells shall be calibrated and provided with an indicator by which the jacking force is determined.

When no longer needed, attachments shall be removed from the structure and concrete surfaces restored to original conditions, except where permanent alterations are shown on the plans.

When jacking assemblies are no longer needed, they shall become the property of the Contractor and shall be disposed of in conformance with the provisions in Section 7-1.13, "Disposal of Material Outside the Highway Right of Way," of the Standard Specifications.

PAYMENT

The contract lump sum price paid for move bridge shall include full compensation for furnishing all labor, materials, tools, equipment and incidentals, and for doing all the work involved in moving bridge including designing, constructing, maintaining, and removing the bridge moving system including surveying superstructure and columns and monitoring displacements, as shown on the plans, as specified in the Standard Specifications and these special provisions, and as directed by the Engineer.

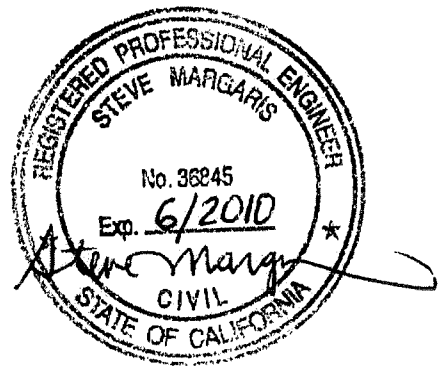

CONTRACT NO. 04-0120R4

CONTRACT CHANGE ORDER NO 171

SHEET 7 OF 23

INDEX TO PLANS

SHEET NO. TITLE

1.	GENERAL PLAN	(Note 1 & 3)
2.	INDEX TO PLANS	(Notes 1 to 6)
3.	GENERAL NOTES NO. 1	(Note 1)
4.	GENERAL NOTES NO. 2	(Note 3)
5.	DECK CONTOURS	
6.	FOUNDATION PLAN	(Note 1)
7.	BENT 52A LAYOUT	
8.	BENT CAP DETAILS NO. 1	
9.	BENT CAP DETAILS NO. 2	
10.	BENT CAP DETAILS NO. 3	
11.	BENT CAP DETAILS NO. 4	(Note 5)
12.	BENT 52A FOOTING DETAILS NO. 1	(Note 1)
13.	BENT 52A FOOTING DETAILS NO. 2	
14.	SKID BENT FOOTING DETAILS NO. 1	
15.	SKID BENT FOOTING DETAILS NO. 2	
16.	SKID BENT FOOTING DETAILS NO. 3	
17.	SKID BENT FOOTING DETAILS NO. 4	
18.	SKID BENT FOOTING DETAILS NO. 5	
19.	SKID BENT FOOTING DETAILS NO. 6	
20.	SHEET NOT USED	
21.	SUPPORT AT PIER E1	(Note 5)
22.	SUPPORT AT PIER E1 DETAILS NO. 1	
23.	SUPPORT AT PIER E1 DETAILS NO. 2	
24.	SUPPORT AT PIER E1 DETAILS NO. 3	
25.	SHEET NOT USED	
26.	SHEET NOT USED	
27.	FRAMING PLAN NO. 1	(Note 3)
28.	FRAMING PLAN NO. 2	
29.	TYPICAL SECTION	
30.	CAMBER	
31.	SHEET NOT USED	
32.	TRUSS LAYOUT NO. 1	(Note 3)
33.	TRUSS LAYOUT NO. 2	
34.	TRUSS LAYOUT NO. 3	
35.	TRUSS LAYOUT NO. 4	
36.	TRUSS JOINT DETAILS NO. 1	
37.	TRUSS JOINT DETAILS NO. 2	
38.	TRUSS JOINT DETAILS NO. 3	
39.	TRUSS JOINT DETAILS NO. 4	
40.	TRUSS JOINT DETAILS NO. 5	
41.	TRUSS JOINT DETAILS NO. 6	
42.	TRUSS JOINT DETAILS NO. 7	
43.	TRUSS JOINT DETAILS NO. 8	
44.	TRUSS JOINT DETAILS NO. 9	
45.	TRUSS JOINT DETAILS NO. 10	
46.	TRUSS JOINT DETAILS NO. 11	
47.	TRUSS JOINT DETAILS NO. 12	
48.	TRUSS JOINT DETAILS NO. 13	
49.	TRUSS JOINT DETAILS NO. 14	
50.	TRUSS JOINT DETAILS NO. 15	
51.	TRUSS JOINT DETAILS NO. 16	
52.	TRUSS JOINT DETAILS NO. 17	
53.	TRUSS JOINT DETAILS NO. 18	
54.	TRUSS JOINT DETAILS NO. 19	
55.	TRUSS JOINT DETAILS NO. 20	
56.	TRUSS JOINT DETAILS NO. 21	
57.	TRUSS JOINT DETAILS NO. 22	
58.	FLOOR BEAM DETAILS NO. 1	
59.	FLOOR BEAM DETAILS NO. 2	
60.	FLOOR BEAM DETAILS NO. 3	
61.	STRINGER DETAILS NO. 1	(Note 3)
62.	STRINGER DETAILS NO. 2	
63.	STRINGER DETAILS NO. 3	
64.	STRINGER DETAILS NO. 4	
65.	STRINGER DETAILS NO. 5	
66.	STRINGER DETAILS NO. 6	
67.	UPPER LATERAL BRACING LAYOUT NO. 1	
68.	UPPER LATERAL BRACING LAYOUT NO. 2	
69.	LOWER LATERAL BRACING LAYOUT NO. 1	
70.	LOWER LATERAL BRACING LAYOUT NO. 2	
71.	LATERAL BRACING DETAILS NO. 1	
72.	LATERAL BRACING DETAILS NO. 2	
73.	LATERAL BRACING DETAILS NO. 3	
74.	LATERAL BRACING DETAILS NO. 4	
75.	LATERAL BRACING DETAILS NO. 5	
76.	LATERAL BRACING DETAILS NO. 6	
77.	LATERAL BRACING DETAILS NO. 7	
78.	LATERAL BRACING DETAILS NO. 8	
79.	LATERAL BRACING DETAILS NO. 9	
80.	SHEET NOT USED	
81.	SHEET NOT USED	
82.	SHEET NOT USED	
83.	SHEET NOT USED	
84.	STEEL GIRDER DETAILS	(Note 3)
85.	MAN HOLE & HAND HOLE DETAILS	
86.	CONCRETE DECK DETAILS NO. 1	
87.	CONCRETE DECK DETAILS NO. 2	
88.	CONCRETE DECK DETAILS NO. 3	
89.	POUR SEQUENCE	
90.	BENT 52A EXPANSION JOINT LAYOUT	(Note 4)
91.	BENT 52A EXPANSION JOINT DETAILS NO. 1	
92.	BENT 52A EXPANSION JOINT DETAILS NO. 2	
93.	BENT 52A EXPANSION JOINT DETAILS NO. 3	
94.	BENT 52A EXPANSION JOINT DETAILS NO. 4	
95.	BENT 52A EXPANSION JOINT DETAILS NO. 5	
96.	BENT 52A EXPANSION JOINT DETAILS NO. 6	
97.	BENT 52A EXPANSION JOINT BARRIER NO. 1	
98.	BENT 52A EXPANSION JOINT BARRIER NO. 2	
99.	PIER E1 EXPANSION JOINT LAYOUT	
100.	PIER E1 EXPANSION JOINT DETAILS NO. 1	
101.	PIER E1 EXPANSION JOINT DETAILS NO. 2	
102.	PIER E1 EXPANSION JOINT DETAILS NO. 3	
103.	PIER E1 EXPANSION JOINT DETAILS NO. 4	
104.	PIER E1 EXPANSION JOINT DETAILS NO. 5	
105.	PIER E1 EXPANSION JOINT BARRIER NO. 1	
106.	PIER E1 EXPANSION JOINT BARRIER NO. 2	
107.	PIER E1 EXPANSION JOINT BARRIER NO. 3	
108.	PIER E1 EXPANSION JOINT BARRIER NO. 4	
109.	PIER E1 EXPANSION JOINT BARRIER NO. 5	
110.	PIER E1 EXPANSION JOINT BARRIER NO. 6	
111.	PIER E1 EXPANSION JOINT BARRIER NO. 7	
112.	JOINT SEAL ASSEMBLY	(Note 3)
113.	BEARING DETAILS NO. 1	(Note 5)
114.	BEARING DETAILS NO. 2	
114A.	BEARING DETAILS NO. 3	
114B.	BEARING DETAILS NO. 4	
144C.	BEARING DETAILS NO. 5	
114D.	BEARING DETAILS NO. 6	
115.	MISCELLANEOUS DETAILS NO. 1	(Note 3)
116.	MISCELLANEOUS DETAILS NO. 2	
117.	MISCELLANEOUS DETAILS NO. 3	
118.	MISCELLANEOUS DETAILS NO. 4	
119.	MISCELLANEOUS DETAILS NO. 5	
120.	EXISTING TRUSS LAYOUT NO. 1	
121.	EXISTING TRUSS LAYOUT NO. 2	
122.	EXISTING TRUSS DETAILS NO. 1	
123.	EXISTING TRUSS DETAILS NO. 2	
124.	EXISTING TRUSS DETAILS NO. 3	
125.	EXISTING TRUSS DETAILS NO. 4	
126.	EXISTING TRUSS DETAILS NO. 5	
127.	EXISTING TRUSS DETAILS NO. 6	
128.	EXISTING TRUSS DETAILS NO. 7	
129.	EXISTING TRUSS DETAILS NO. 8	
130.	EXISTING TRUSS DETAILS NO. 9	
131.	EXISTING TRUSS DETAILS NO. 10	
132.	SKID BENT LAYOUT	(Note 2)
133.	SKID BENT SECTIONS NO. 1	
134.	SKID BENT SECTIONS NO. 2	
135.	SKID BENT SECTIONS NO. 3	
136.	SKID BENT DETAILS NO. 1	
137.	SKID BENT DETAILS NO. 2	
138.	SKID BENT DETAILS NO. 3	
139.	SKID BENT DETAILS NO. 4	
140.	SKID BENT DETAILS NO. 5	
141.	SKID BENT DETAILS NO. 6	
142.	SKID BENT DETAILS NO. 7	
143.	SKID BENT DETAILS NO. 8	
144.	SKID BENT DETAILS NO. 9	
145.	SKID BENT DETAILS NO. 10	
146.	SKID BENT DETAILS NO. 11	
147.	SKID BEAM DETAILS NO. 1	
148.	SKID BEAM DETAILS NO. 2	
149.	SKID BEAM DETAILS NO. 3	
150.	SKID BEAM DETAILS NO. 4	
151.	SKID BEAM DETAILS NO. 5	
152.	SKID BEAM DETAILS NO. 6	
153.	SKID BEAM DETAILS NO. 7	
154.	SHEET NOT USED	
155.	ROLL-OUT ROLL-IN OPERATION SEQUENCE NO. 1	(Note 6)
156.	ROLL-OUT ROLL-IN OPERATION SEQUENCE NO. 2	
157.	ROLL-OUT ROLL-IN OPERATION SEQUENCE NO. 3	
158.	ROLL-OUT ROLL-IN OPERATION SEQUENCE NO. 4	
159.	ROLL-OUT ROLL-IN OPERATION SEQUENCE NO. 5	
160.	ROLL-OUT ROLL-IN OPERATION SEQUENCE NO. 6	
161.	ROLL-OUT ROLL-IN OPERATION SEQUENCE NO. 7	
162.	ROLL-OUT ROLL-IN OPERATION SEQUENCE NO. 8	
163.	YB4 TRUSS ROLL-OUT PROCEDURES NO. 1	
164.	YB4 TRUSS ROLL-OUT PROCEDURES NO. 2	
165.	YB4 TRUSS ROLL-OUT PROCEDURES NO. 3	
166.	ETI TRUSS ROLL-IN PROCEDURES NO. 1	
167.	ETI TRUSS ROLL-IN PROCEDURES NO. 2	
168.	ETI TRUSS ROLL-IN PROCEDURES NO. 3	
169.	ETI TRUSS ROLL-IN PROCEDURES NO. 4	
170. TO 200.	SHEET NOT USED	
201.	LOG OF TEST BORINGS NO. 1	(Note 1)
202.	LOG OF TEST BORINGS NO. 2	
203.	LOG OF TEST BORINGS NO. 3	
204.	LOG OF TEST BORINGS NO. 4	
205.	LOG OF TEST BORINGS NO. 5	
206.	LOG OF TEST BORINGS NO. 6	
207.	LOG OF TEST BORINGS NO. 7	
208.	LOG OF TEST BORINGS NO. 8	
209.	LOG OF TEST BORINGS 1 OF 17	
210.	LOG OF TEST BORINGS 3 OF 17	
211.	LOG OF TEST BORINGS 5 OF 17	
212.	LOG OF TEST BORINGS 6 OF 17	
213.	LOG OF TEST BORINGS 16 OF 17	
214.	LOG OF TEST BORINGS 17 OF 17	

Caltrans Metric

DIST	COUNTY	ROUTE	KILOMETER POST TOTAL PROJECT	SHEET No	TOTAL
04	SF	80	12.6/13.2		

Madan K. Sah
REGISTERED CIVIL ENGINEER

8-18-08
PLANS APPROVAL DATE

REGISTERED PROFESSIONAL ENGINEER — Madan Kumar Sah — No. C59203 — Exp. 06/30/09 — CIVIL — STATE OF CALIFORNIA

The State of California or its officers or agents shall not be responsible for the accuracy or completeness of electronic copies of this plan sheet.

T.Y. LIN / MOFFATT & NICHOL
Two Harrison Street, Suite 500
San Francisco, CA 94105

100% PS&E

CONTRACT NO. 04-0120R4

CONTRACT CHANGE ORDER NO 171

SHEET 8 OF 23

Notes:

1. Sheets pertaining to 100% Concrete Substructure submittal (Submittal Date 11-5-07).
2. Sheets pertaining to 100% Skid Bent and Skid Beam submittal (Submittal Date 3-15-08).
3. Sheets pertaining to 100% Truss submittal (Submittal Date 4-7-08).
4. Sheets pertaining to 100% Expansion Joints and Expansion Joint Barriers submittal (Submittal Date 5-12-08).
5. Sheets pertaining to 100% Bearing submittal (Submittal Date 6-6-08).
6. Sheet pertaining to 100% Roll-Out Roll-In Sequence/Procedures submittal (Submittal Date 8-18-08).

ALL DIMENSIONS ARE IN MILLIMETERS UNLESS OTHERWISE SHOWN

SAN FRANCISCO OAKLAND BAY BRIDGE
EAST SPAN SEISMIC SAFETY PROJECT

EAST TIE-IN

INDEX TO PLANS

T. Ostrom/M. Whiteside/A. Akinsanya	DESIGN	BY M. Sah	CHECKED S. Cheng	PREPARED FOR THE STATE OF CALIFORNIA DEPARTMENT OF TRANSPORTATION
DESIGN OVERSIGHT	DETAILS	BY S. Lee	CHECKED A. Lee	
SIGN OFF DATE	QUANTITIES	BY H. Nelson	CHECKED A. Lee	

M. Sah — PROJECT ENGINEER
S. Abbas — PROJECT MANAGER

CU 0120R4

BRIDGE NO. 34-0006 (TEMP)
KILOMETER POST 12.6

DISREGARD PRINTS BEARING EARLIER REVISION DATES →

REVISION DATES (PRELIMINARY STAGE ONLY): 11/6/07 | 3/15/08 | 4/7/08 | 5/12/08 | 6/6/08 | 8/18/08

SHEET 2 OF 214

DESIGN DETAIL SHEET (METRIC) (REV. 3/1/98)
@DATE@ @TIME@ Pen Table File

ORIGINAL SCALE IN MILLIMETERS FOR REDUCED PLANS 0 10 20 30 40 50 60 70 80 90 100

FILE => p:\bb\04-012001\etl\roll-out roll-in 8-18-08\aaltp-1.dgn

DATE PLOTTED => 8/19/2008 TIME PLOTTED => 21:34:39 PM
USERNAME => ALee
FILE => p:\bb\04-012001\etl\roll-out roll-in 8-18-08\aaltp-1.dgn

DIST	COUNTY	ROUTE	KILOMETER POST TOTAL PROJECT	SHEET No	TOTAL
04	SF	80	12.6/13.2		

Madan K. Sah
REGISTERED CIVIL ENGINEER

8-18-08
PLANS APPROVAL DATE

REGISTERED PROFESSIONAL ENGINEER — Madan Kumar Sah — No. C59203 — Exp. 06/30/09 — CIVIL — STATE OF CALIFORNIA

The State of California or its officers or agents shall not be responsible for the accuracy or completeness of electronic copies of this plan sheet.

T.Y. LIN / MOFFATT & NICHOL
Two Harrison Street, Suite 500
San Francisco, CA 94105

Operation Sequence: Stage 1

Preparatory Work:

- Construct Bent 52A.
- Construct skid bent foundations.
- Erect skid bents.
- Erect skid beams.
- Restrain existing spans YB1, YB2, YB3 & YB4 as required. (See Note 1)
- Install access platforms at Pier E1, Pier YB4 and elsewhere as required.
- Prepare bearing locations on Pier E1 & Bent 52A. (See Note 2)
- Strengthen the pickup panel points on existing span YB4. (See Note 1)
- Rework bottom chord, diagonal bracing connections of span YB4 on skid bent lines. (See Note 1)
- Install masonry plates on Bent 52A for ETI pot bearings. (See Note 2)
- Prepare for cutting of shoes, etc. in existing span YB4 (Remove lead-based paint and other hazardous materials in vicinity of the cuts to be made). (See Note 1)

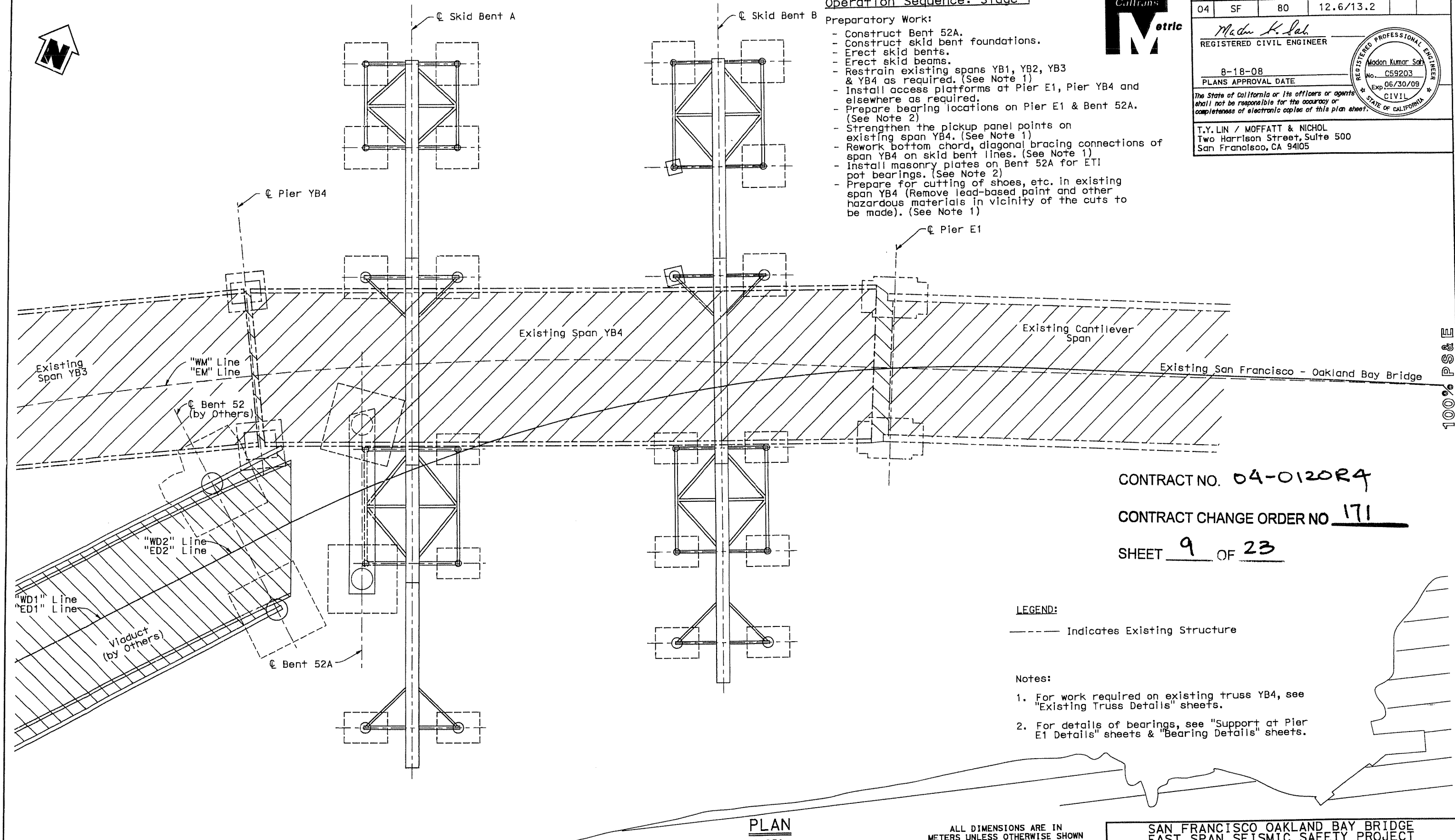

PLAN
1:250

ALL DIMENSIONS ARE IN METERS UNLESS OTHERWISE SHOWN

LEGEND:

——— Indicates Existing Structure

Notes:

1. For work required on existing truss YB4, see "Existing Truss Details" sheets.
2. For details of bearings, see "Support at Pier E1 Details" sheets & "Bearing Details" sheets.

CONTRACT NO. 04-0120R4

CONTRACT CHANGE ORDER NO 171

SHEET 9 OF 23

SAN FRANCISCO OAKLAND BAY BRIDGE
EAST SPAN SEISMIC SAFETY PROJECT

EAST TIE-IN

ROLL-OUT ROLL-IN OPERATION SEQUENCE NO. 1

DESIGN	BY J. Otter, M. Chen	CHECKED S. Cheng	PREPARED FOR THE STATE OF CALIFORNIA DEPARTMENT OF TRANSPORTATION
DETAILS	BY P. Zhao, S. Lee	CHECKED A. Lee	
QUANTITIES	BY H. Nelson	CHECKED A. Lee	

T. Ostrom/M. Whiteside/A. Akinsanya
DESIGN OVERSIGHT

SIGN OFF DATE

M. Sah
PROJECT ENGINEER
S. Abbas
PROJECT MANAGER

CU
EA 0120R4

34-0006 (TEMP)
KILOMETER POST
12.6

DESIGN DETAIL SHEET (METRIC) (REV. 3/1/98)
◆DATE◆ ◆TIME◆ Pen Table File

ORIGINAL SCALE IN MILLIMETERS FOR REDUCED PLANS 0 10 20 30 40 50 60 70 80 90 100

DISREGARD PRINTS BEARING EARLIER REVISION DATES → 11/08/07 8/18/08

SHEET 155 OF 214

FILE => p:\bb\04-012001\etl\roll-out roll-in 8-18-08\alrori01.dgn

100% PS&E

FILE => p:\bb\04-012001\etl\roll-out roll-in 8-18-08\alrori01.dgn
TIME PLOTTED => 2:34:53 PM
DATE PLOTTED => 8/19/2008
USERNAME => ALee

DIST	COUNTY	ROUTE	KILOMETER POST TOTAL PROJECT	SHEET No	TOTAL
04	SF	80	12.6/13.2		

Caltrans Metric

Madan K. Sah
REGISTERED CIVIL ENGINEER

8-18-08
PLANS APPROVAL DATE

REGISTERED PROFESSIONAL ENGINEER — Madan Kumar Sah — No. C59203 — Exp 06/30/09 — CIVIL — STATE OF CALIFORNIA

The State of California or its officers or agents shall not be responsible for the accuracy or completeness of electronic copies of this plan sheet.

T.Y. LIN / MOFFATT & NICHOL
Two Harrison Street, Suite 500
San Francisco, CA 94105

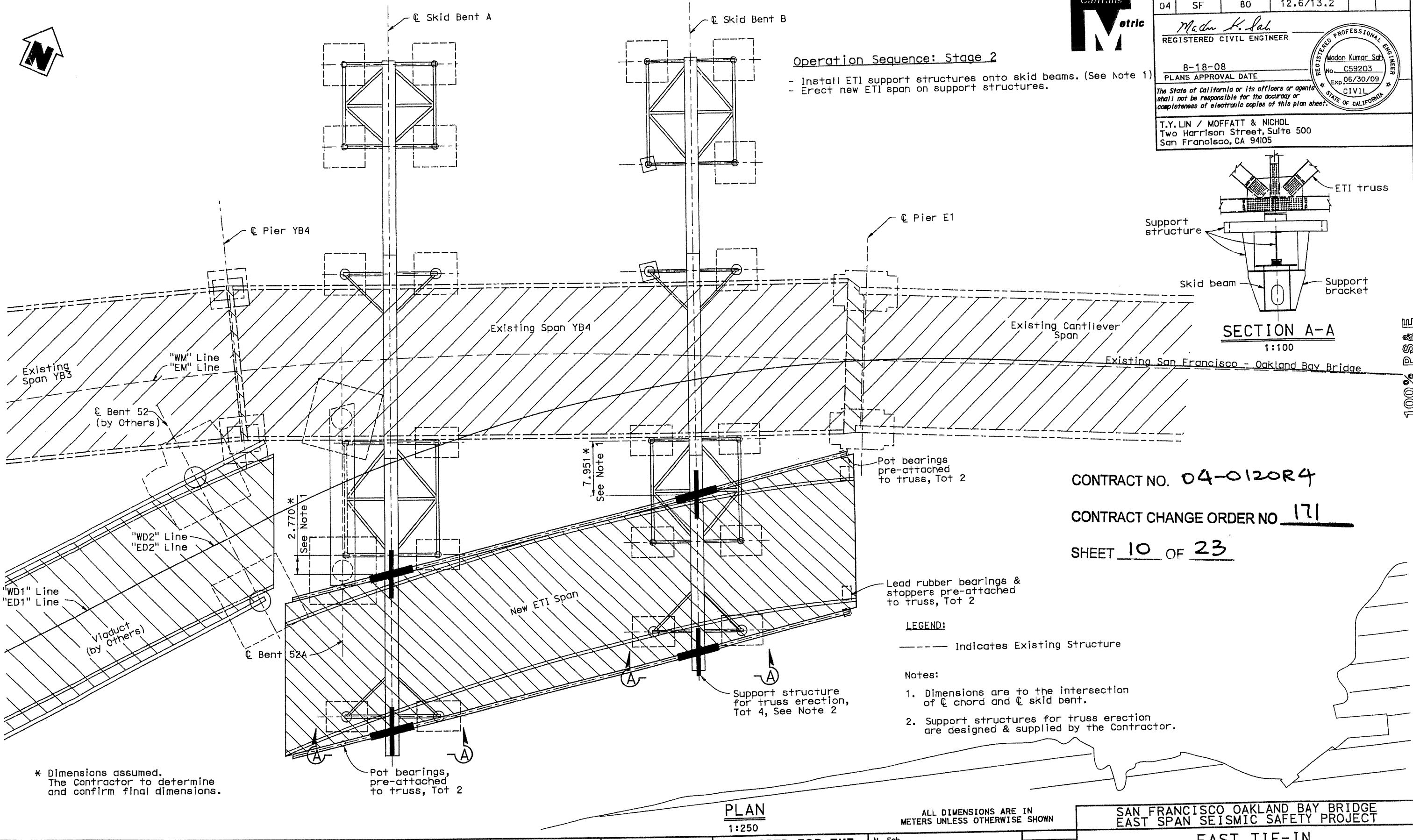

PLAN
1:250

SECTION A-A
1:100

Operation Sequence: Stage 2

- Install ETI support structures onto skid beams. (See Note 1)
- Erect new ETI span on support structures.

LEGEND:

——— Indicates Existing Structure

Notes:

1. Dimensions are to the intersection of ℄ chord and ℄ skid bent.
2. Support structures for truss erection are designed & supplied by the Contractor.

* Dimensions assumed. The Contractor to determine and confirm final dimensions.

CONTRACT NO. 04-0120R4

CONTRACT CHANGE ORDER NO 171

SHEET 10 OF 23

100% PS&E

FILE => p:\bb\04-012001\etl\roll-out roll-in 8-18-08\alrorl02.dgn
TIME PLOTTED => 2:34:57 PM
DATE PLOTTED => 8/19/2008
USERNAME => ALee

ALL DIMENSIONS ARE IN METERS UNLESS OTHERWISE SHOWN

SAN FRANCISCO OAKLAND BAY BRIDGE EAST SPAN SEISMIC SAFETY PROJECT

EAST TIE-IN

ROLL-OUT ROLL-IN OPERATION SEQUENCE NO. 2

DESIGN	J. Otter, M. Chen	S. Cheng
DETAILS	P. Zhao, S. Lee	A. Lee
QUANTITIES	H. Nelson	A. Lee

PREPARED FOR THE STATE OF CALIFORNIA
DEPARTMENT OF TRANSPORTATION

M. Sah
PROJECT ENGINEER
S. Abbas
PROJECT MANAGER

34-0006 (TEMP)
KILOMETER POST 12.6

CU
EA 0120R4

DISREGARD PRINTS BEARING EARLIER REVISION DATES → 11/08/01 8/18/08

SHEET 156 OF 214

T. Ostrom/M. Whiteside/A. Akinsanya
DESIGN OVERSIGHT

SIGN OFF DATE

DESIGN DETAIL SHEET (METRIC) (REV. 3/1/98)
●DATE● ●TIME● Pen Table File

ORIGINAL SCALE IN MILLIMETERS FOR REDUCED PLANS 0 10 20 30 40 50 60 70 80 90 100

FILE => p:\bb\04-012001\etl\roll-out roll-in 8-18-08\clrorl02.dgn

DIST	COUNTY	ROUTE	KILOMETER POST TOTAL PROJECT	SHEET No	TOTAL
04	SF	80	12.6/13.2		

Caltrans Metric

Madan K. Sah
REGISTERED CIVIL ENGINEER

8-18-08
PLANS APPROVAL DATE

Madan Kumar Sah
No. C59203
Exp 06/30/09
CIVIL
STATE OF CALIFORNIA

The State of California or its officers or agents shall not be responsible for the accuracy or completeness of electronic copies of this plan sheet.

T.Y.LIN / MOFFATT & NICHOL
Two Harrison Street, Suite 500
San Francisco, CA 94105

Operation Sequence: Stage 3

- Install skid shoes, pipe struts push-pull units & support structures below the pickup nodes of existing truss YB4. Do not contact truss.
- Relocate and secure existing maintenance traveler to span YB3.
- Install skid shoes & pipe struts under support structures for the new ETI truss.
- Test lift & test move the new ETI truss.

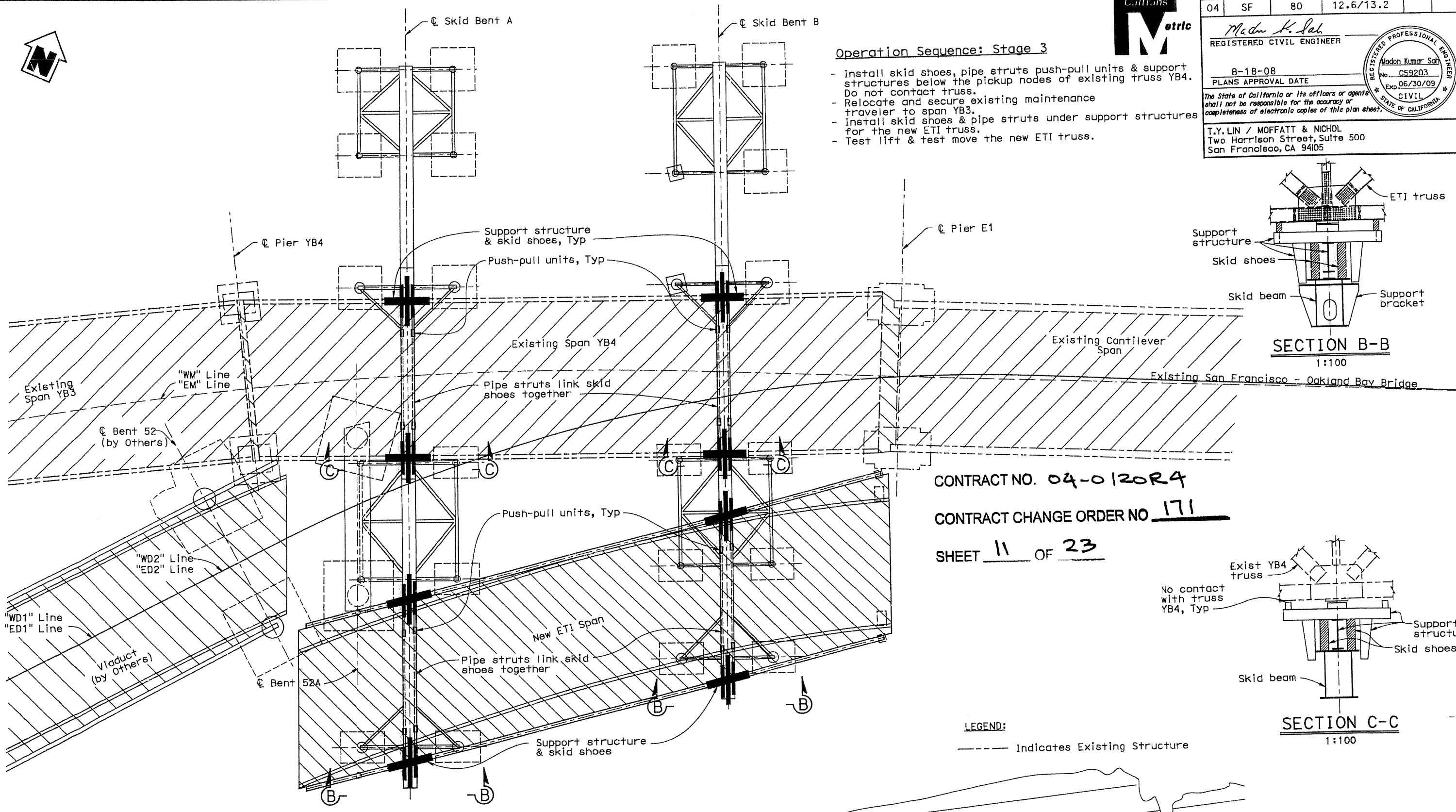

SECTION B-B
1:100

CONTRACT NO. 04-0120R4

CONTRACT CHANGE ORDER NO 171

SHEET 11 OF 23

SECTION C-C
1:100

LEGEND:

——— Indicates Existing Structure

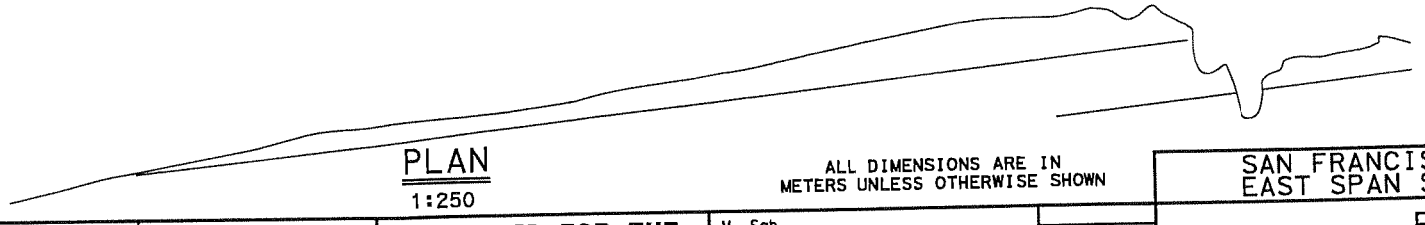

PLAN
1:250

ALL DIMENSIONS ARE IN METERS UNLESS OTHERWISE SHOWN

100% PS&E

FILE => p:\bb\04-012001\eti\roll-out roll-in 8-18-08\alrorl03.dgn
DATE PLOTTED => 8/19/2008
TIME PLOTTED => 2:35:00 PM
USERNAME => ALee

T. Ostrom/M. Whiteside/A. Akinsanya
DESIGN OVERSIGHT

SIGN OFF DATE

DESIGN	BY J. Otter, M. Chen	CHECKED S. Cheng
DETAILS	BY P. Zhao, S. Lee	CHECKED A. Lee
QUANTITIES	BY H. Nelson	CHECKED A. Lee

PREPARED FOR THE STATE OF CALIFORNIA
DEPARTMENT OF TRANSPORTATION

M. Sah
PROJECT ENGINEER
S. Abbas
PROJECT MANAGER

34-0006 (TEMP)
KILOMETER POST
12.6

CU
EA 0120R4

DISREGARD PRINTS BEARING EARLIER REVISION DATES → 11/08/07 8/18/08

SAN FRANCISCO OAKLAND BAY BRIDGE
EAST SPAN SEISMIC SAFETY PROJECT

EAST TIE-IN

ROLL-OUT ROLL-IN OPERATION SEQUENCE NO. 3

SHEET 157 OF 214

DESIGN DETAIL SHEET (METRIC) (REV. 3/1/98)
◆DATE◆ ◆TIME◆ Pen Table File

ORIGINAL SCALE IN MILLIMETERS FOR REDUCED PLANS 0 10 20 30 40 50 60 70 80 90 100

FILE => p:\bb\04-012001\eti\roll-out roll-in 8-18-08\alrorl03.dgn

DIST	COUNTY	ROUTE	KILOMETER POST TOTAL PROJECT	SHEET No	TOTAL
04	SF	80	12.6/13.2		

Caltrans Metric

Madon K. Sah
REGISTERED CIVIL ENGINEER

8-18-08
PLANS APPROVAL DATE

REGISTERED PROFESSIONAL ENGINEER
Madon Kumar Sah
No. C59203
Exp. 06/30/09
CIVIL
STATE OF CALIFORNIA

The State of California or its officers or agents shall not be responsible for the accuracy or completeness of electronic copies of this plan sheet.

T.Y. LIN / MOFFATT & NICHOL
Two Harrison Street, Suite 500
San Francisco, CA 94105

CONTRACT NO. 04-0120R4

CONTRACT CHANGE ORDER NO 171

SHEET 12 OF 23

SECTION D-D
1:100

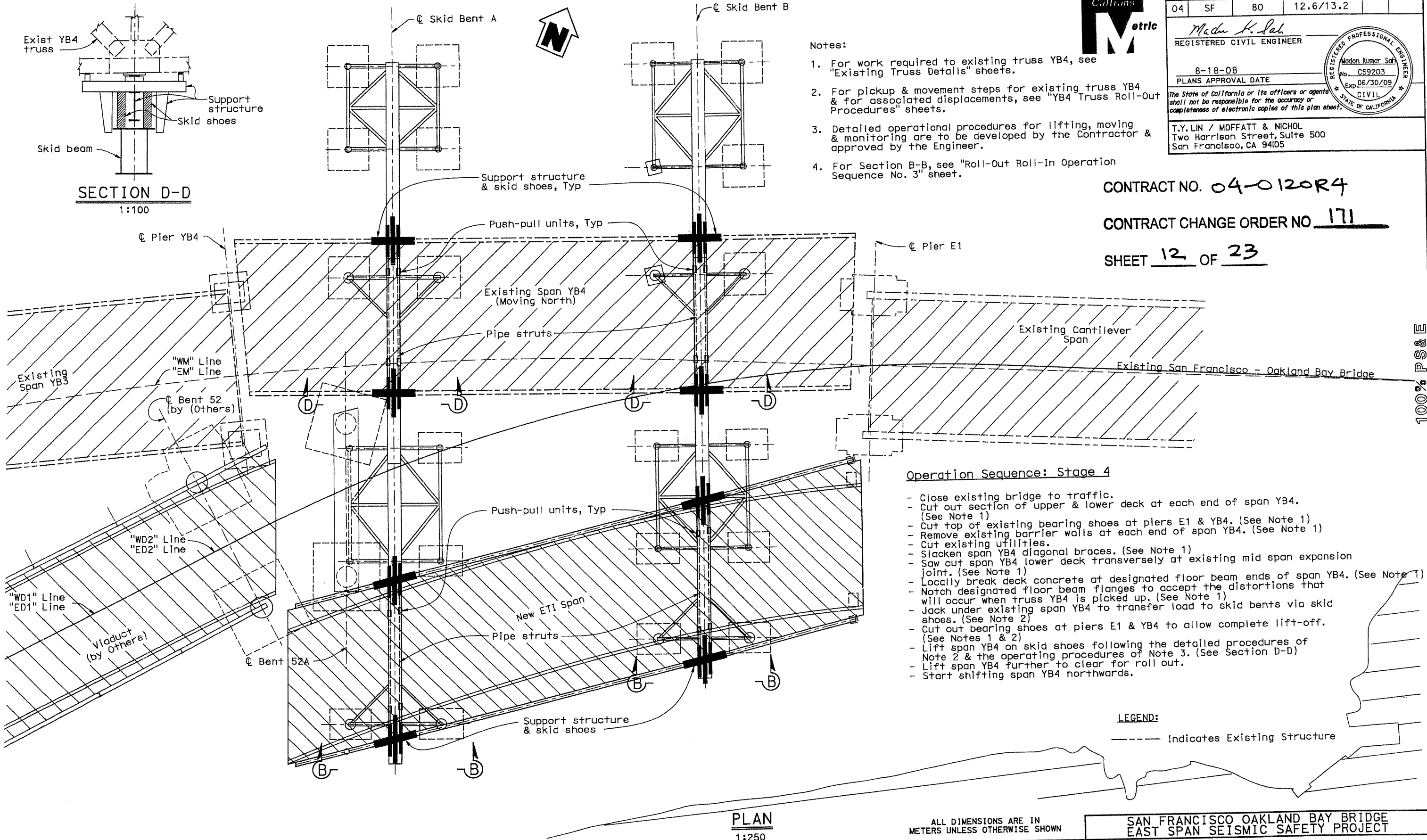

Notes:

1. For work required to existing truss YB4, see "Existing Truss Details" sheets.
2. For pickup & movement steps for existing truss YB4 & for associated displacements, see "YB4 Truss Roll-Out Procedures" sheets.
3. Detailed operational procedures for lifting, moving & monitoring are to be developed by the Contractor & approved by the Engineer.
4. For Section B-B, see "Roll-Out Roll-In Operation Sequence No. 3" sheet.

Operation Sequence: Stage 4

- Close existing bridge to traffic.
- Cut out section of upper & lower deck at each end of span YB4. (See Note 1)
- Cut top of existing bearing shoes at piers E1 & YB4. (See Note 1)
- Remove existing barrier walls at each end of span YB4. (See Note 1)
- Cut existing utilities.
- Slacken span YB4 diagonal braces. (See Note 1)
- Saw cut span YB4 lower deck transversely at existing mid span expansion joint. (See Note 1)
- Locally break deck concrete at designated floor beam ends of span YB4. (See Note 1)
- Notch designated floor beam flanges to accept the distortions that will occur when truss YB4 is picked up. (See Note 1)
- Jack under existing span YB4 to transfer load to skid bents via skid shoes. (See Note 2)
- Cut out bearing shoes at piers E1 & YB4 to allow complete lift-off. (See Notes 1 & 2)
- Lift span YB4 on skid shoes following the detailed procedures of Note 2 & the operating procedures of Note 3. (See Section D-D)
- Lift span YB4 further to clear for roll out.
- Start shifting span YB4 northwards.

LEGEND:

- - - - - Indicates Existing Structure

PLAN
1:250

ALL DIMENSIONS ARE IN METERS UNLESS OTHERWISE SHOWN

SAN FRANCISCO OAKLAND BAY BRIDGE
EAST SPAN SEISMIC SAFETY PROJECT

EAST TIE-IN

ROLL-OUT ROLL-IN OPERATION SEQUENCE NO. 4

T. Ostrom/M. Whiteside/A. Akinsanya
DESIGN OVERSIGHT

SIGN OFF DATE

	BY	CHECKED
DESIGN	J. Otter, M. Chen	S. Cheng
DETAILS	P. Zhao, S. Lee	A. Lee
QUANTITIES	H. Nelson	A. Lee

PREPARED FOR THE STATE OF CALIFORNIA DEPARTMENT OF TRANSPORTATION

M. Sah
PROJECT ENGINEER
S. Abbas
PROJECT MANAGER

34-0006 (TEMP)
KILOMETER POST 12.6

CU
EA 0120R4

DISREGARD PRINTS BEARING EARLIER REVISION DATES 11/09/07 8/18/08

SHEET 158 OF 214

DESIGN DETAIL SHEET (METRIC) (REV. 3/1/98)
●DATE● ●TIME● Pen Table File

ORIGINAL SCALE IN MILLIMETERS FOR REDUCED PLANS 0 10 20 30 40 50 60 70 80 90 100

FILE => p:\bb\04-012001\eti\roll-out roll-in 8-18-08\alrori04.dgn

100% PS&E

FILE => p:\bb\04-012001\eti\roll-out roll-in 8-18-08\alrori04.dgn
TIME PLOTTED => 2:35:03 PM
DATE PLOTTED => 8/19/2008
USERNAME => ALee

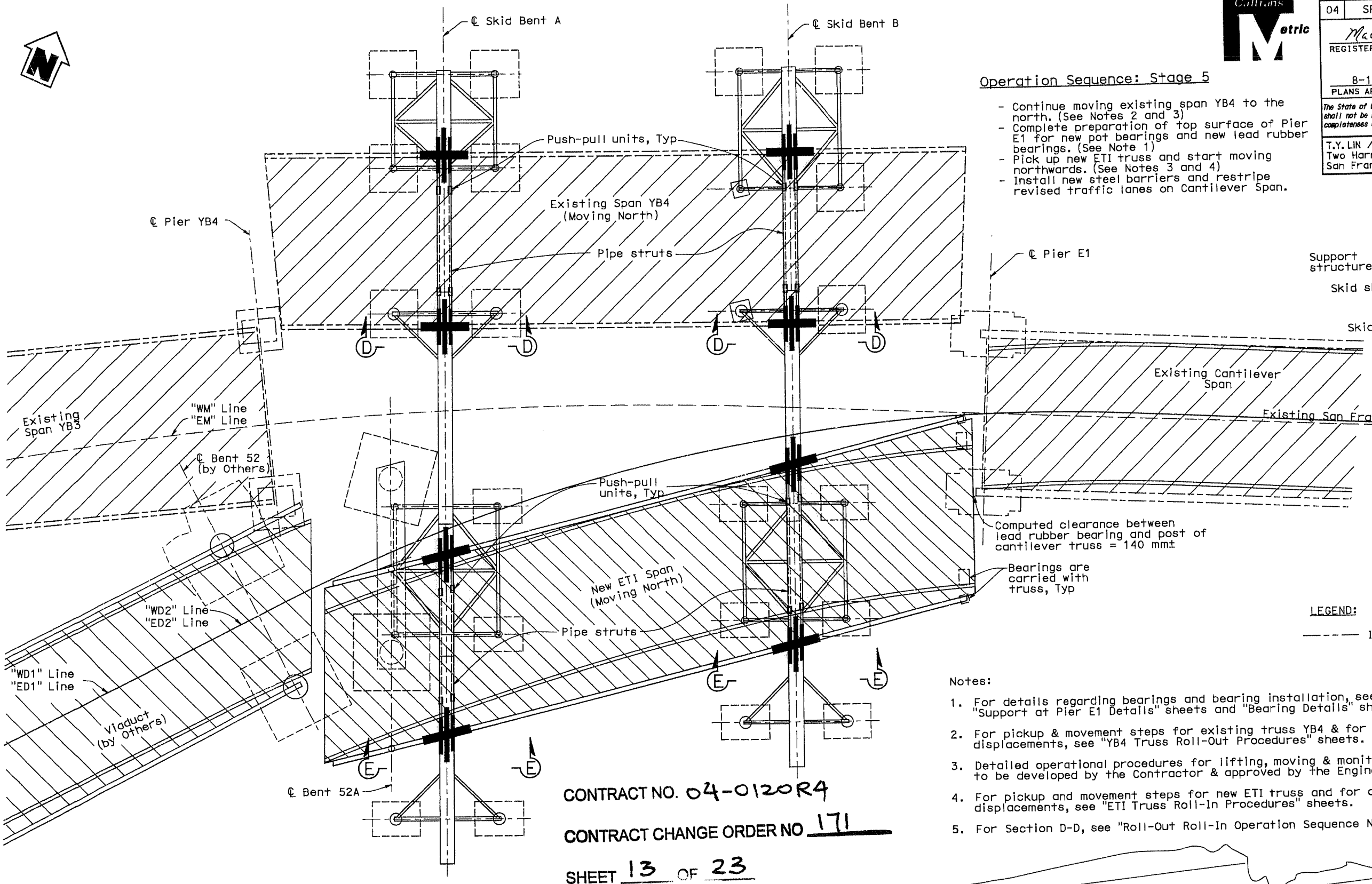

PLAN
1:250

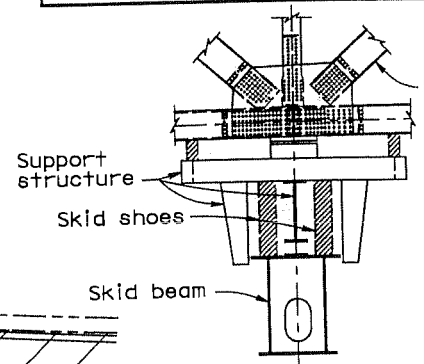

SECTION E-E
1:100

Operation Sequence: Stage 5

- Continue moving existing span YB4 to the north. (See Notes 2 and 3)
- Complete preparation of top surface of Pier E1 for new pot bearings and new lead rubber bearings. (See Note 1)
- Pick up new ETI truss and start moving northwards. (See Notes 3 and 4)
- Install new steel barriers and restripe revised traffic lanes on Cantilever Span.

LEGEND:

——— Indicates Existing Structure

Notes:

1. For details regarding bearings and bearing installation, see "Support at Pier E1 Details" sheets and "Bearing Details" sheets
2. For pickup & movement steps for existing truss YB4 & for associated displacements, see "YB4 Truss Roll-Out Procedures" sheets.
3. Detailed operational procedures for lifting, moving & monitoring are to be developed by the Contractor & approved by the Engineer.
4. For pickup and movement steps for new ETI truss and for associated displacements, see "ETI Truss Roll-In Procedures" sheets.
5. For Section D-D, see "Roll-Out Roll-In Operation Sequence No. 4" sheet.

CONTRACT NO. 04-0120R4

CONTRACT CHANGE ORDER NO 171

SHEET 13 OF 23

DIST	COUNTY	ROUTE	KILOMETER POST TOTAL PROJECT	SHEET No	TOTAL
04	SF	80	12.6/13.2		

Madan K. Sah
REGISTERED CIVIL ENGINEER

8-18-08
PLANS APPROVAL DATE

REGISTERED PROFESSIONAL ENGINEER — Madan Kumar Sah — No. C59203 — Exp. 06/30/09 — CIVIL — STATE OF CALIFORNIA

The State of California or its officers or agents shall not be responsible for the accuracy or completeness of electronic copies of this plan sheet.

T.Y. LIN / MOFFATT & NICHOL
Two Harrison Street, Suite 500
San Francisco, CA 94105

ALL DIMENSIONS ARE IN METERS UNLESS OTHERWISE SHOWN

SAN FRANCISCO OAKLAND BAY BRIDGE
EAST SPAN SEISMIC SAFETY PROJECT

EAST TIE-IN

ROLL-OUT ROLL-IN OPERATION SEQUENCE NO. 5

DESIGN	BY J. Otter, M. Chen	CHECKED S. Cheng	PREPARED FOR THE STATE OF CALIFORNIA DEPARTMENT OF TRANSPORTATION
DETAILS	BY P. Zhao, S. Lee	CHECKED A. Lee	
QUANTITIES	BY H. Nelson	CHECKED A. Lee	

T. Ostrom/M. Whiteside/A. Akinsanya
DESIGN OVERSIGHT

SIGN OFF DATE

M. Sah
PROJECT ENGINEER
S. Abbas
PROJECT MANAGER

CU 34-0006 (TEMP)
EA 0120R4
KILOMETER POST 12.6

DISREGARD PRINTS BEARING EARLIER REVISION DATES → 11/09/07 8/18/08

SHEET 159 OF 214

DESIGN DETAIL SHEET (METRIC) (REV. 3/1/98)
●DATE● ●TIME● Pen Table File

ORIGINAL SCALE IN MILLIMETERS FOR REDUCED PLANS 0 10 20 30 40 50 60 70 80 90 100

FILE => p:\bb\04-012001\etl\roll-out roll-in 8-18-08\alrorl05.dgn

100% PS&E
FILE => p:\bb\04-012001\etl\roll-out roll-in 8-18-08\alrorl05.dgn
TIME PLOTTED => 2:35:08 PM
DATE PLOTTED => 8/19/2008
USERNAME => ALee

DIST	COUNTY	ROUTE	KILOMETER POST TOTAL PROJECT	SHEET No	TOTAL
04	SF	80	12.6/13.2		

Caltrans Metric

Madan K. Sah
REGISTERED CIVIL ENGINEER

8-18-08
PLANS APPROVAL DATE

REGISTERED PROFESSIONAL ENGINEER — Madan Kumar Sah — No. C59203 — Exp. 06/30/09 — CIVIL — STATE OF CALIFORNIA

The State of California or its officers or agents shall not be responsible for the accuracy or completeness of electronic copies of this plan sheet.

T.Y. LIN / MOFFATT & NICHOL
Two Harrison Street, Suite 500
San Francisco, CA 94105

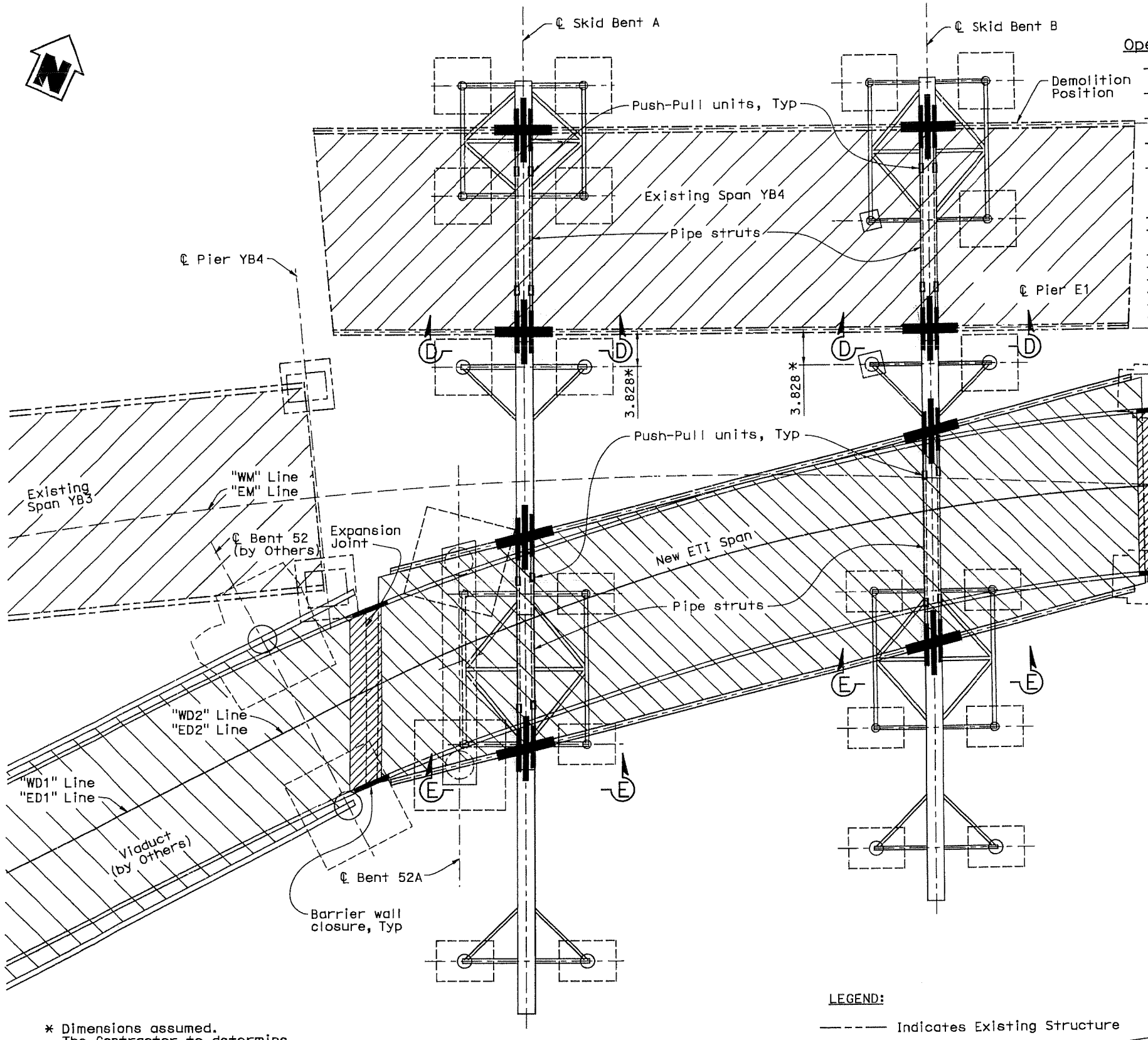

* Dimensions assumed.
The Contractor to determine and confirm final dimensions.

PLAN
1:250

Operation Sequence: Stage 6

- Move existing span YB4 towards demolition position. (See Notes 2 and 3)
- Grout the masonry plates for the new pot bearings at pier E1.
- Place masonry plates for new lead rubber bearings at pier E1. Do not grout.
- Skid new ETI span into final position. (See Notes 3 and 4)
- Lower new ETI span onto the bearings at Bent 52A. Lower east end to almost make contact between pot bearings and masonry plates at pier E1. (See Notes 1 and 4)
- Start expansion joint installation. (See Note 5)
- When masonry plate grout for pot bearings at pier E1 reaches required strength, transfer east end weight to those bearings. (See Note 1)
- Install temporary restraint assembly onto pot bearings at pier E1. (See Note 1)
- Remove the skid shoes from the ETI truss.
- Tighten stringer bolts at all slotted holes on new ETI span.
- Connect utilities on new ETI span.
- Complete expansion joint installation. (See Note 5)
- Install barrier wall closures at expansion joint or use temporary barriers. (See Note 6)
- Open the structure to traffic.

LEGEND:

——— Indicates Existing Structure

ALL DIMENSIONS ARE IN METERS UNLESS OTHERWISE SHOWN

CONTRACT NO. 04-0120R4

CONTRACT CHANGE ORDER NO 171

SHEET 14 OF 23

Notes:

1. For details regarding bearings and bearing installation, see "Support at Pier E1 Details" sheets and "Bearing Details" sheets.
2. For pickup & movement steps for existing YB4 & for associated displacements, see "YB4 Truss Roll-Out Procedures" sheets.
3. Detailed operational procedures for lifting, moving & monitoring are to be developed by the Contractor & approved by the Engineer.
4. For pickup and movement steps for new ETI truss and for associated displacements, see "ETI Truss Roll-In Procedures" sheets.
5. For expansion joint installation procedures, see "Pier E1 Expansion Joint Details" sheet and "Bent 52A Expansion Joint Details" sheets.
6. For barrier walls at expansion joints, see "Bent 52A Expansion Joint Barrier Details" sheets and "Pier E1 Expansion Joint Barrier Details" sheets.
7. For Section D-D, see "Roll-Out Roll-In Operation Sequence No. 4" sheet.
8. For Section E-E, see "Roll-Out Roll-In Operation Sequence No. 5" sheet.

100% PS&E

FILE => p:\bb\04-012001\etl\roll-out roll-in 8-18-08\alirori06.dgn
TIME PLOTTED => 2:35:10 PM
DATE PLOTTED => 8/19/2008
USERNAME => Alee

SAN FRANCISCO OAKLAND BAY BRIDGE
EAST SPAN SEISMIC SAFETY PROJECT

EAST TIE-IN

ROLL-OUT ROLL-IN OPERATION SEQUENCE NO. 6

T. Ostrom/M. Whiteside/A. Akinsanya	DESIGN	J. Otter, M. Chen	S. Cheng
DESIGN OVERSIGHT	DETAILS	P. Zhao, S. Lee	A. Lee
SIGN OFF DATE	QUANTITIES	H. Nelson	A. Lee

PREPARED FOR THE STATE OF CALIFORNIA DEPARTMENT OF TRANSPORTATION

M. Sah, PROJECT ENGINEER
S. Abbas, PROJECT MANAGER
CU 34-0006 (TEMP)
EA 0120R4
KILOMETER POST 12.6

DISREGARD PRINTS BEARING EARLIER REVISION DATES → 11/08/07 8/18/08

SHEET 160 OF 214

DESIGN DETAIL SHEET (METRIC) (REV. 3/1/98)
◆DATE◆ ◆TIME◆ Pen Table File

ORIGINAL SCALE IN MILLIMETERS FOR REDUCED PLANS 0 10 20 30 40 50 60 70 80 90 100

FILE => p:\bb\04-012001\etl\roll-out roll-in 8-18-08\alirori06.dgn

DIST	COUNTY	ROUTE	KILOMETER POST TOTAL PROJECT	SHEET No	TOTAL
04	SF	80	12.6/13.2		

Caltrans Metric

Madan K. Sah
REGISTERED CIVIL ENGINEER

8-18-08
PLANS APPROVAL DATE

REGISTERED PROFESSIONAL ENGINEER — Madan Kumar Sah — No. C59203 — Exp. 06/30/09 — CIVIL — STATE OF CALIFORNIA

The State of California or its officers or agents shall not be responsible for the accuracy or completeness of electronic copies of this plan sheet.

T.Y. LIN / MOFFATT & NICHOL
Two Harrison Street, Suite 500
San Francisco, CA 94105

SECTION F-F
1:100

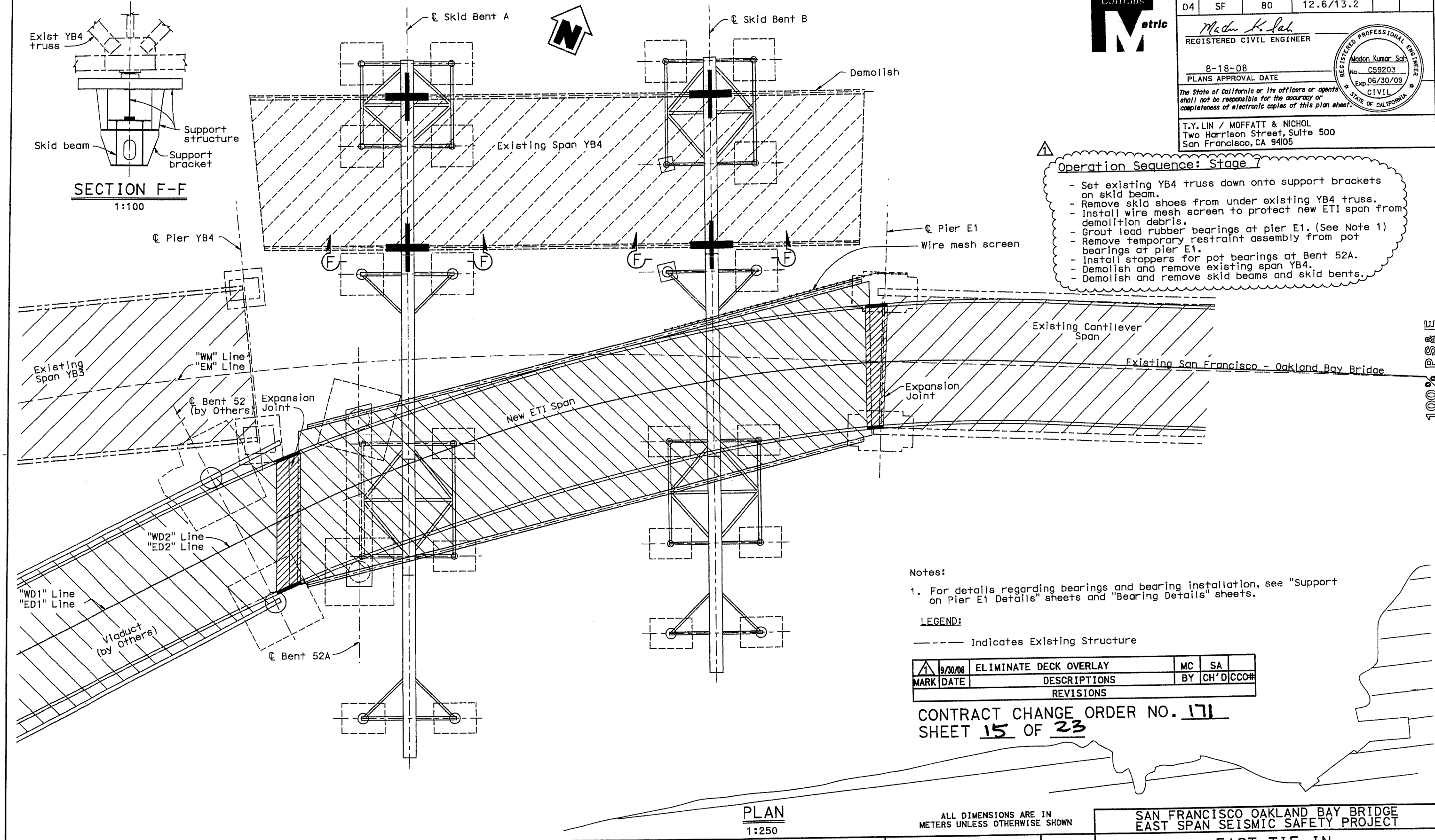

PLAN
1:250

⚠1

Operation Sequence: Stage 7

- Set existing YB4 truss down onto support brackets on skid beam.
- Remove skid shoes from under existing YB4 truss.
- Install wire mesh screen to protect new ETI span from demolition debris.
- Grout lead rubber bearings at pier E1. (See Note 1)
- Remove temporary restraint assembly from pot bearings at pier E1.
- Install stoppers for pot bearings at Bent 52A.
- Demolish and remove existing span YB4.
- Demolish and remove skid beams and skid bents.

Notes:

1. For details regarding bearings and bearing installation, see "Support on Pier E1 Details" sheets and "Bearing Details" sheets.

LEGEND:

——— Indicates Existing Structure

MARK	DATE	REVISIONS: DESCRIPTIONS	BY	CH'D	CCO#
⚠1	9/30/08	ELIMINATE DECK OVERLAY	MC	SA	

CONTRACT CHANGE ORDER NO. 171
SHEET 15 OF 23

ALL DIMENSIONS ARE IN METERS UNLESS OTHERWISE SHOWN

SAN FRANCISCO OAKLAND BAY BRIDGE
EAST SPAN SEISMIC SAFETY PROJECT

EAST TIE-IN

ROLL-OUT ROLL-IN OPERATION SEQUENCE NO. 7

DESIGN	BY J. Otter, M. Chen	CHECKED S. Cheng	PREPARED FOR THE STATE OF CALIFORNIA DEPARTMENT OF TRANSPORTATION
DETAILS	BY P. Zhao, S. Lee	CHECKED A. Lee	
QUANTITIES	BY H. Nelson	CHECKED A. Lee	

T. Ostrom/M. Whiteside/A. Akinsanya
DESIGN OVERSIGHT
SIGN OFF DATE

M. Sah — PROJECT ENGINEER
S. Abbas — PROJECT MANAGER
CU 34-0006 (TEMP)
EA 0120R4
KILOMETER POST 12.6

DISREGARD PRINTS BEARING EARLIER REVISION DATES → 11/08/07 8/18/08 9/30/08

SHEET 161R1 OF 214

DESIGN DETAIL SHEET (METRIC) (REV. 3/1/98)
◆DATE◆ ◆TIME◆ Pen Table File

ORIGINAL SCALE IN MILLIMETERS FOR REDUCED PLANS 0 10 20 30 40 50 60 70 80 90 100

FILE => p:\bb\04-012001\et1\revision 1a\airor107.dgn

100% PS&E

USERNAME => pzhao DATE PLOTTED => 10/7/2008 TIME PLOTTED => 11:18:02 AM

DIST	COUNTY	ROUTE	KILOMETER POST TOTAL PROJECT	SHEET No	TOTAL
04	SF	80	12.6/13.2		

Madan K. Sah
REGISTERED CIVIL ENGINEER

8-18-08
PLANS APPROVAL DATE

REGISTERED PROFESSIONAL ENGINEER — Madan Kumar Sah — No. C59203 — Exp. 06/30/09 — CIVIL — STATE OF CALIFORNIA

The State of California or its officers or agents shall not be responsible for the accuracy or completeness of electronic copies of this plan sheet.

T.Y. LIN / MOFFATT & NICHOL
Two Harrison Street, Suite 500
San Francisco, CA 94105

CALCULATED WEIGHTS (kN) AT ROLL-OUT/ROLL-IN

ITEM	YB4 TRUSS	ETI TRUSS
STRUCTURAL STEEL	10,381	11,823 *
BARRIER WALL	552	2,911
BEARINGS ETC.	94	220
CONCRETE DECK	13,580	13,930
OVERLAY	1,779	0
UTILITIES	643	643
SUB TOTAL (BARE)	27,029	29,527
ALLOWANCES		
5% ON STRUCTURAL STEEL	519	591
10% ON CONCRETE	1,358	1,393
10% ON OVERLAY	178	0
GRAND TOTAL	29,084	31,511

* The Contractor to verify this value from shop drawings using accurate as-assembled weights.

SKID BEAM/SKID BENT STIFFNESSES

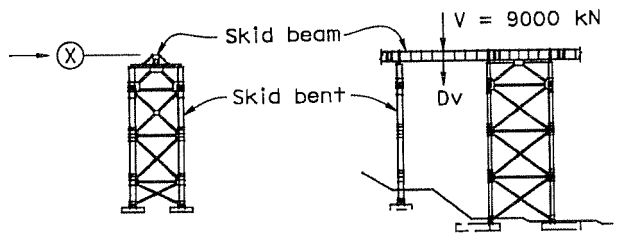

1) $D_{v,max}$ from a vertical load of 9000 kN = 40 mm in longest span of skid beam (beam deflection only).

2) Maximum axial shortening of skid bent plus foundation settlements due to roll-out roll-in operation = 15 mm.

3) Lateral stiffness at level Ⓧ varies from 75 kN/mm to 20 kN/mm depending on location along the skid beam.

COMPUTED TORSIONAL STIFFNESS OF TRUSSES

EXIST YB4 TRUSS

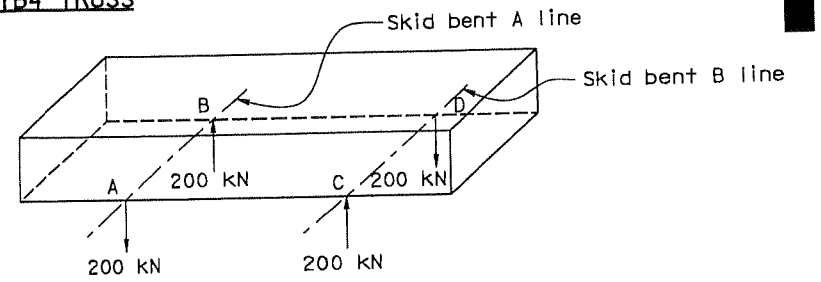

1) For point A to drop 25 mm out of the plane of points B, C and D, The resultant computed reactions are shown.

2) For design of the transport gear allow a variation of -50% to +100% in the truss stiffness.

NEW ETI TRUSS

New ETI truss is much stiffer and must, therefore, be transported in "Three Point" mode. This requires either that the reactions at A and B or else the reactions at C and D be hydraulically equalized during transport, raising and lowering. The Contractor to select which reaction points are to be equalized.

REQUIRED LATERAL DESIGN LOADS

a) During truss erection and demolition

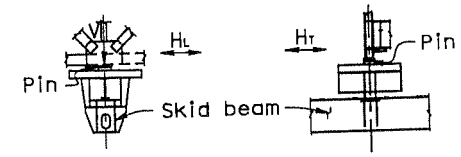

i) V=Vertical Load - See "YB4 Truss Roll-Out Procedures" sheets and "ETI Truss Roll-In Procedures" sheets.

ii) Seismic horizontal loadings

$\sqrt{H_L^2 + H_T^2} = 0.2V$ $\quad 0 < H_L < 0.2V$ $\quad 0 < H_T < 0.2V$

iii) Wind horizontal loadings
25 Years return period wind per West Wind Laboratories Report & Tests

$\sqrt{H_L^2 + H_T^2} = 300$ kN $\quad 0 < H_L < 300$ kN $\quad 0 < H_T < 300$ kN

b) During truss movement

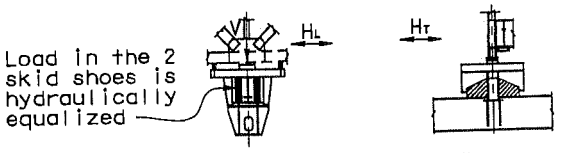

i) V=Vertical Load - See "YB4 Truss Roll-Out Procedures" sheets and "ETI Truss Roll-In Procedures" sheets.

ii) Lateral loads

$\sqrt{H_L^2 + H_T^2} = 0.1V$ $\quad 0 < H_L < 0.1V$ $\quad 0 < H_T < 0.1V$

Notes:

1. The horizontal load value during truss movement accommodates wind loadings due to peak 3 second gust speeds of 116 kph (72mph).
2. Treat all horizontal loads as service-level loads.
3. H_L and H_T are the horizontal loads at each pickup point.

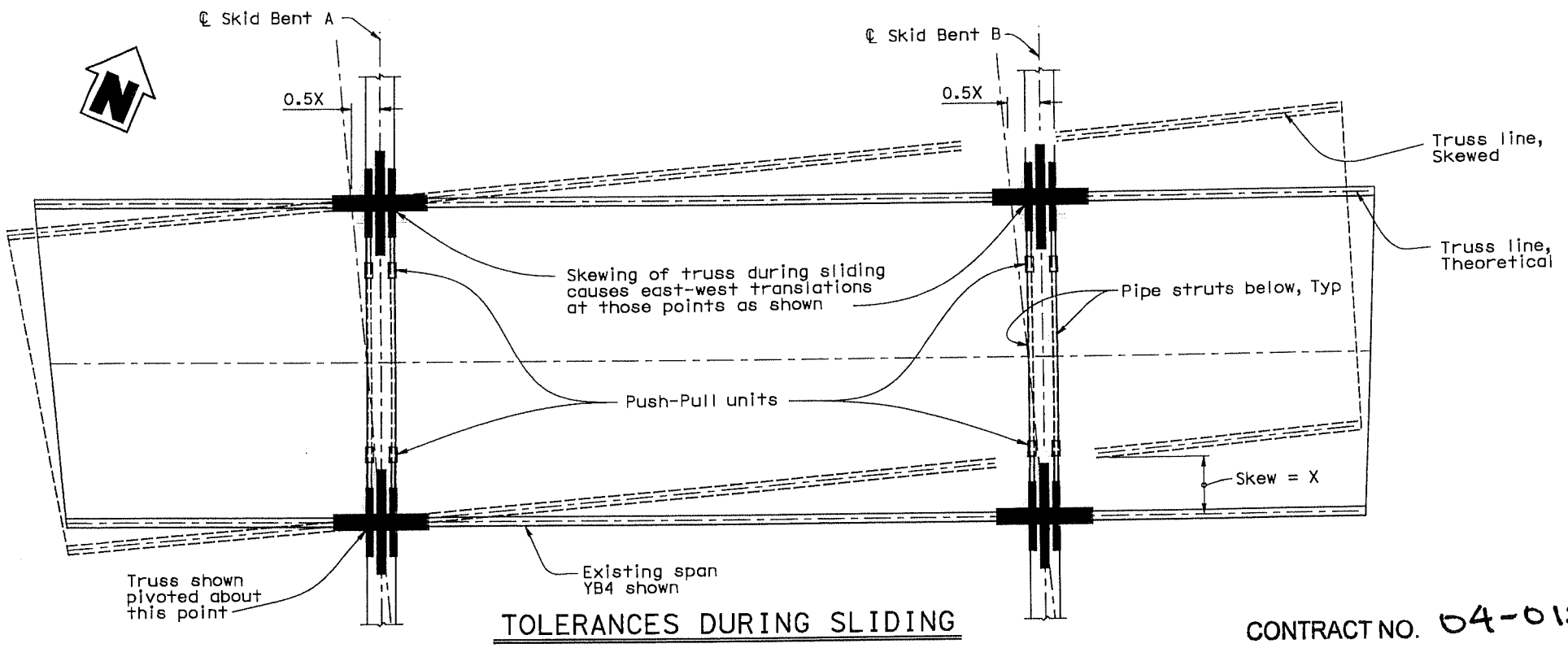

TOLERANCES DURING SLIDING

NTS

Existing span YB4 shown, ETI span similar

Notes:

1. The Contractor's truss movement system is to be able to accomodate the east-west translations shown during the moving operation.
2. The Contractor to determine the maximum acceptable skew (dimension X) accounting for available range of east-west translations in the skidding system, possible misplacements of the skid beams, clearances to adjacent structures, etc.
3. The Contractor to monitor the skew throughout truss moves and to control skew to within the acceptable limits.

CONTRACT NO. 04-0120R4

CONTRACT CHANGE ORDER NO 171

SHEET 16 OF 23

ALL DIMENSIONS ARE IN METERS UNLESS OTHERWISE SHOWN

SAN FRANCISCO OAKLAND BAY BRIDGE
EAST SPAN SEISMIC SAFETY PROJECT

EAST TIE-IN

ROLL-OUT ROLL-IN OPERATION SEQUENCE NO. 8

T. Ostrom/M. Whiteside/A. Akinsanya	DESIGN	BY J. Otter, W. Chen	CHECKED S. Cheng	PREPARED FOR THE STATE OF CALIFORNIA DEPARTMENT OF TRANSPORTATION	M. Sah	34-0006 (TEMP)	SHEET 162 OF 214
DESIGN OVERSIGHT	DETAILS	BY P. Zhao, S. Lee	CHECKED A. Lee		PROJECT ENGINEER S. Abbas	KILOMETER POST 12.6	
SIGN OFF DATE	QUANTITIES	BY H. Nelson	CHECKED A. Lee		PROJECT MANAGER	CU EA 0120R4	

DESIGN DETAIL SHEET (METRIC) (REV. 3/1/98) ⊕DATE⊕ ⊕TIME⊕ Pen Table File

ORIGINAL SCALE IN MILLIMETERS FOR REDUCED PLANS 0 10 20 30 40 50 60 70 80 90 100

DISREGARD PRINTS BEARING EARLIER REVISION DATES → 11/08/01 8/18/08

FILE => p:\bb\04-012001\etl\roll-out roll-in 8-18-08\alror108.dgn

100% PS&E

FILE => p:\bb\04-012001\etl\roll-out roll-in 8-18-08\alror108.dgn
TIME PLOTTED => 2:35:17 PM
DATE PLOTTED => 8/19/2008
USERNAME => ALee

DIST	COUNTY	ROUTE	KILOMETER POST TOTAL PROJECT	SHEET No	TOTAL
04	SF	80	12.6/13.2		

Caltrans Metric

Madan K. Sah
REGISTERED CIVIL ENGINEER

8-18-08
PLANS APPROVAL DATE

Madan Kumar Sah, No. C59203, Exp. 06/30/09, CIVIL, REGISTERED PROFESSIONAL ENGINEER, STATE OF CALIFORNIA

The State of California or its officers or agents shall not be responsible for the accuracy or completeness of electronic copies of this plan sheet.

T.Y. LIN / MOFFATT & NICHOL
Two Harrison Street, Suite 500
San Francisco, CA 94105

Phase 1: (Prepare to jack-up)

- Initial position. All preparation work on span YB4 is completed. (See Note C)**
- Restraints at pier YB3 are installed with 50 mm slack, tie back of span YB1 to abutment is installed.

After road is closed:

A. Remove portions of upper & lower decks as noted. (See Note C)**
B. Cut tops of bearing shoes at pier E1 & pier YB4 to allow pins to lift out.
C. Release bottom chord horizontal bracing at lift points (4 Locations-slacken bolts). (See Note C)**
D. Break out concrete at top deck shear brackets. (See Note C)**
E. Notch flanges of floor beams. (See Note C)**
F. Saw cut or break out midspan joint in the bottom deck. (See Note C)**

Loads & Reactions Are Based On:

TRUSS WEIGHT ESTIMATE
AT ROLL-OUT = 29,000 kN
= 6,600 kips

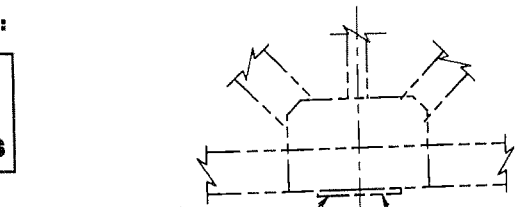

DETAIL X
NTS

* Dimensions are given for convenience only. Dimensions are derived from survey. The Contractor to determine exact dimensions

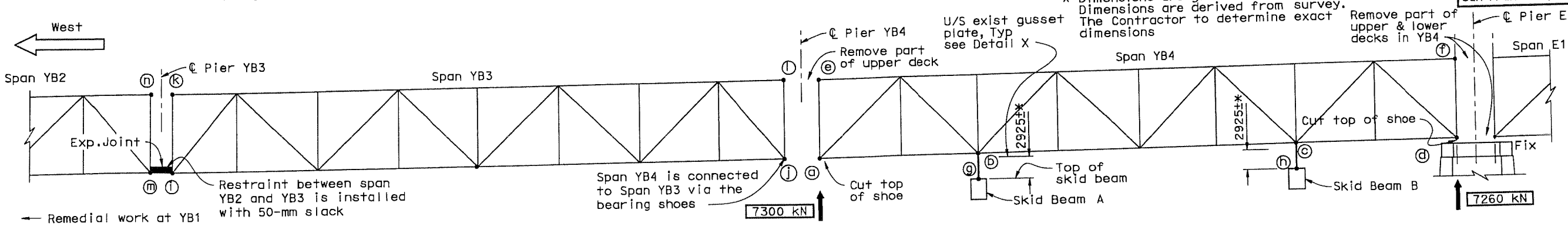

Phase 2: (Take-up 75% load)

A. Engage East & West skid units (can be done earlier). (See Note B)**
B. Fasten to Truss YB4. (See Note B)**
C. Pick up load on east & west skid units simultaneously until each unit is carrying 5500 KN (approximately 75% of its anticipated maximum load). (See Note 4 & Note B)**

Notes:

1. All displacements are with respect to the initial position of the truss nodes before any jacking operations have taken place.
2. The displacement notation is as following

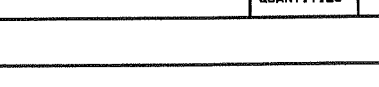

3. Point of east-west restraint is the bearing on Pier E1.
4. Maximum differential between loads at East & West Skid bents not to exceed 1800 kN during lifting.
5. Maximum differential extension of skid shoe jacks on any one skid beam not to exceed 50 mm.
6. Reactions are given per pick-up location and are as calculated. Add 5% contingency to all reactions.
7. Jacks will have to extend further than the displacements shown to accommodate skid beam and skid bent deflections. Allow maximum 50 mm for the total of the two.
8. Displacements given are as calculated. Allow ±33% variation on all displacements.
9. For the purpose of design of skidding system, increase all reactions by a further 8% to allow for the load redistributions that will occur due to skid beam deflections etc. while truss is being carried in four point mode.
10. It is presumed that the existing YB4 truss will be transported in a "four point support" mode, i.e. no hydraulic equalization between any of the four reaction points.

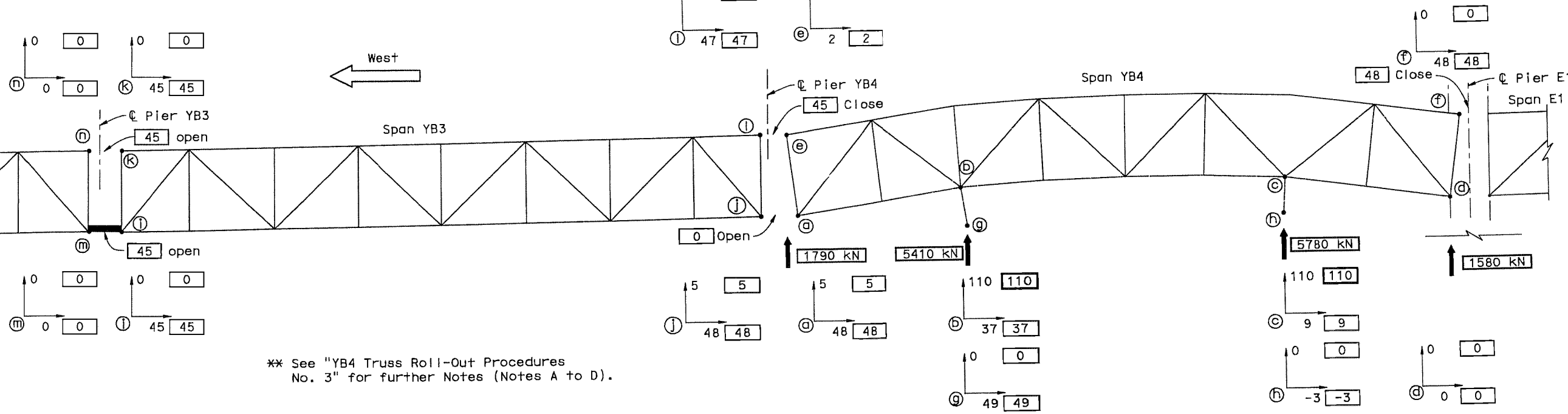

** See "YB4 Truss Roll-Out Procedures No. 3" for further Notes (Notes A to D).

CONTRACT NO. 04-0120R4
CONTRACT CHANGE ORDER NO 171
SHEET 17 OF 23

ALL DIMENSIONS ARE IN METERS UNLESS OTHERWISE SHOWN

SAN FRANCISCO OAKLAND BAY BRIDGE
EAST SPAN SEISMIC SAFETY PROJECT

EAST TIE-IN

YB4 TRUSS ROLL-OUT PROCEDURES NO. 1

T. Ostrom/M. Whiteside/A. Akinsanya, DESIGN OVERSIGHT	DESIGN	BY J. Otter, M. Chen — CHECKED S. Cheng
SIGN OFF DATE	DETAILS	BY P. Zhao, S. Lee — CHECKED A. Lee
	QUANTITIES	BY H. Nelson — CHECKED A. Lee

PREPARED FOR THE STATE OF CALIFORNIA DEPARTMENT OF TRANSPORTATION

M. Sah, PROJECT ENGINEER
S. Abbas, PROJECT MANAGER
CU
EA 0120R4

34-0006 (TEMP)
KILOMETER POST 12.6

DISREGARD PRINTS BEARING EARLIER REVISION DATES → 11/08/07 8/18/08

SHEET 163 OF 214

DESIGN DETAIL SHEET (METRIC) (REV. 3/1/98) *DATE* *TIME* Pen Table File

ORIGINAL SCALE IN MILLIMETERS FOR REDUCED PLANS 0 10 20 30 40 50 60 70 80 90 100

FILE => p:\bb\04-012001\et1\roll-out roll-in 8-18-08\dlyb4rop01.dgn

100% PS&E

FILE => p:\bb\04-012001\et1\roll-out roll-in 8-18-08\dlyb4rop01.dgn
TIME PLOTTED => 2:35:20 PM
DATE PLOTTED => 8/19/2008
USERNAME => ALee

DIST	COUNTY	ROUTE	KILOMETER POST TOTAL PROJECT	SHEET No	TOTAL
04	SF	80	12.6/13.2		

CONTRACT NO. 04-0120R4

CONTRACT CHANGE ORDER NO 171

SHEET 18 OF 23

Madan K. Sah
REGISTERED CIVIL ENGINEER

8-18-08
PLANS APPROVAL DATE

REGISTERED PROFESSIONAL ENGINEER — Madan Kumar Sah — No. C59203 — Exp. 06/30/09 — CIVIL — STATE OF CALIFORNIA

The State of California or its officers or agents shall not be responsible for the accuracy or completeness of electronic copies of this plan sheet.

T.Y. LIN / MOFFATT & NICHOL
Two Harrison Street, Suite 500
San Francisco, CA 94105

Phase 3: (Lift-off West end)

A. Adjust slack in the East-West restraints between spans YB3 & YB2. Leave 5 mm slack.
B. Extend jacks at Skid Bent B by 20 mm.
C. Start to increase load at Skid Bent A & monitor pins within the shoes at YB4.
D. Continue to increase load at Skid Bent A until the pins start to lift at YB4.
E. Lift at pins by 10 mm.

Note: At this stage truss is still restrained in the bearing shoes at Pier E1.

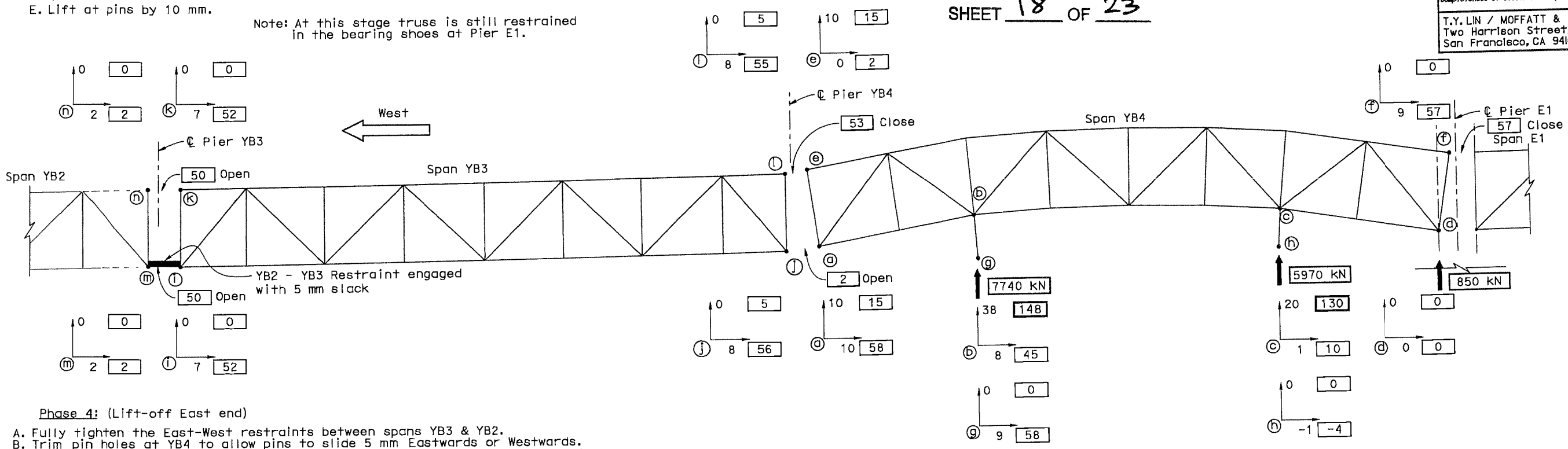

Phase 4: (Lift-off East end)

A. Fully tighten the East-West restraints between spans YB3 & YB2.
B. Trim pin holes at YB4 to allow pins to slide 5 mm Eastwards or Westwards.
C. Increase load at Skid Bent B to 100% of anticipated value & monitor the pins within the shoes at Pier E1.
D. When pins start to lift off, cut the bearing shoes at pier E1.
E. Cut the bearing shoes at pier YB4.
F. Re-tighten bolts in bottom chord horizontal bracing for transport (4 locations).

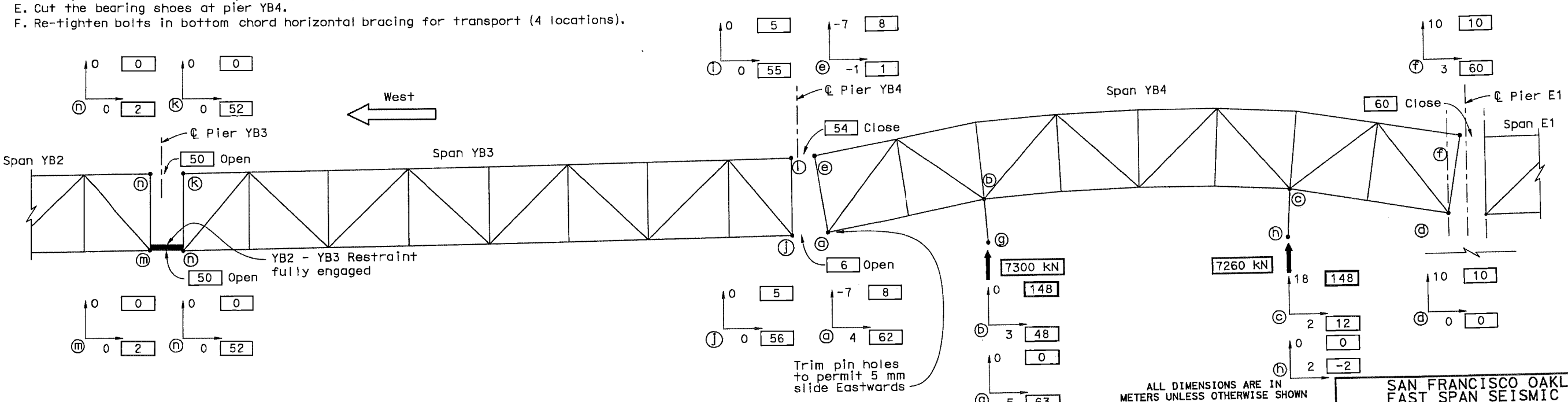

ALL DIMENSIONS ARE IN METERS UNLESS OTHERWISE SHOWN

SAN FRANCISCO OAKLAND BAY BRIDGE
EAST SPAN SEISMIC SAFETY PROJECT

EAST TIE-IN

YB4 TRUSS ROLL-OUT PROCEDURES NO. 2

T. Ostrom/M. Whiteside/A. Akinsanya	DESIGN OVERSIGHT	
	SIGN OFF DATE	
DESIGN	BY J. Otter, M. Chen	CHECKED S. Cheng
DETAILS	BY P. Zhao, S. Lee	CHECKED A. Lee
QUANTITIES	BY H. Nelson	CHECKED A. Lee

PREPARED FOR THE STATE OF CALIFORNIA DEPARTMENT OF TRANSPORTATION

M. Sah — PROJECT ENGINEER
S. Abbas — PROJECT MANAGER
CU EA 0120R4

34-0006 (TEMP)
KILOMETER POST 12.6

DISREGARD PRINTS BEARING EARLIER REVISION DATES → 11/05/07 8/18/08

SHEET 164 OF 214

DESIGN DETAIL SHEET (METRIC) (REV. 3/1/98) ●DATE● ●TIME● Pen Table File

ORIGINAL SCALE IN MILLIMETERS FOR REDUCED PLANS 0 10 20 30 40 50 60 70 80 90 100

FILE => p:\bb\04-012001\etl\roll-out roll-in 8-18-08\alyb4rop02.dgn

100% PS&E

FILE => p:\bb\04-012001\etl\roll-out roll-in 8-18-08\alyb4rop02.dgn
TIME PLOTTED => 2:35:22 PM
DATE PLOTTED => 8/19/2008
USERNAME => Alee

DIST	COUNTY	ROUTE	KILOMETER POST TOTAL PROJECT	SHEET No	TOTAL
04	SF	80	12.6/13.2		

Madan K. Sah
REGISTERED CIVIL ENGINEER

8-18-08
PLANS APPROVAL DATE

REGISTERED PROFESSIONAL ENGINEER — Madan Kumar Sah — No. C59203 — Exp. 06/30/09 — CIVIL — STATE OF CALIFORNIA

The State of California or its officers or agents shall not be responsible for the accuracy or completeness of electronic copies of this plan sheet.

T.Y. LIN / MOFFATT & NICHOL
Two Harrison Street, Suite 500
San Francisco, CA 94105

Phase 5: (Roll-out)

A. Lift Truss a further 150 mm, lifting simultaneously at all 4 lift points.
B. Control the lift to within ± 25 mm maximum differential extension of all jacks.
C. Roll out to the North.
D. Set down truss on demolition supports- lower truss 300 mm at each skid bent to transfer load to skid beams via support structures.
E. Remove transport gear.

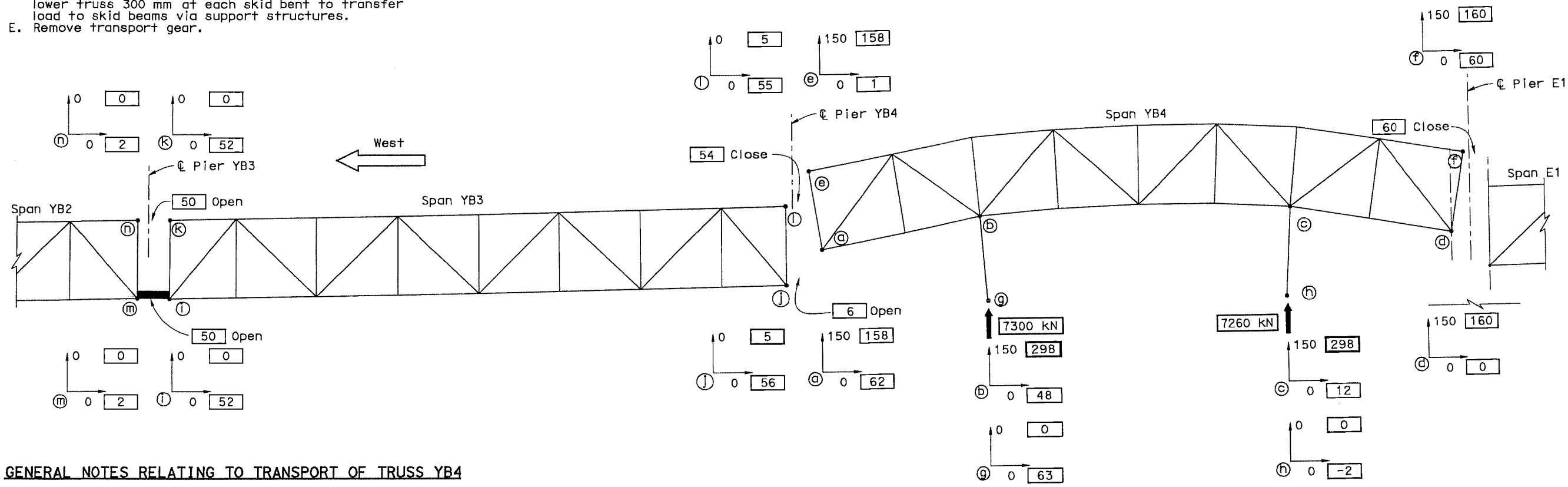

Note: All displacements shown are for end of phase 5A

GENERAL NOTES RELATING TO TRANSPORT OF TRUSS YB4

A. The Contractor is to prepare a detailed, step by step, procedure for the operation incorporating and fully integrating the steps shown on these drawings with the detailed operating procedures, steps and other requirements associated with work by the Contractor. These procedures are to be submitted to the Engineer for approval.

B. Detailed operational procedures for executing, controlling and monitoring the lifting and moving of the truss are to be developed by the Contractor and submitted to the Engineer for approval. It is the responsibility of the Contractor to implement, control and monitor these procedures during moving operations.

C. For details of work to be done to the existing truss YB4, see "Existing Truss Details" sheets.

D. Transport gear & the support structures for truss demolition are to be designed and supplied by the Contractor. The Contractor to submit plans and calculations for approval.

CONTRACT NO. 04-0120R4

CONTRACT CHANGE ORDER NO 171

SHEET 19 OF 23

ALL DIMENSIONS ARE IN METERS UNLESS OTHERWISE SHOWN

SAN FRANCISCO OAKLAND BAY BRIDGE
EAST SPAN SEISMIC SAFETY PROJECT

EAST TIE-IN

YB4 TRUSS ROLL-OUT PROCEDURES NO. 3

T. Ostrom/M. Whiteside/A. Akinsanya
DESIGN OVERSIGHT

SIGN OFF DATE

	BY	CHECKED
DESIGN	J. Otter, M. Chen	S. Cheng
DETAILS	P. Zhao, S. Lee	A. Lee
QUANTITIES	H. Nelson	A. Lee

PREPARED FOR THE STATE OF CALIFORNIA DEPARTMENT OF TRANSPORTATION

M. Sah — PROJECT ENGINEER
S. Abbas — PROJECT MANAGER

34-0006 (TEMP)
KILOMETER POST 12.6

CU 04
EA 0120R4

DESIGN DETAIL SHEET (METRIC) (REV. 3/1/98)
DATE *TIME* Pen Table File

ORIGINAL SCALE IN MILLIMETERS FOR REDUCED PLANS 0 10 20 30 40 50 60 70 80 90 100

DISREGARD PRINTS BEARING EARLIER REVISION DATES → 11/02/07 8/18/08

SHEET 165 OF 214

FILE => p:\bb\04-012001\etl\roll-out roll-in 8-18-08\clyb4rop03.dgn

100% PS&E
DATE PLOTTED => 8/19/2008 TIME PLOTTED => 2:35:24 PM
USERNAME => ALee

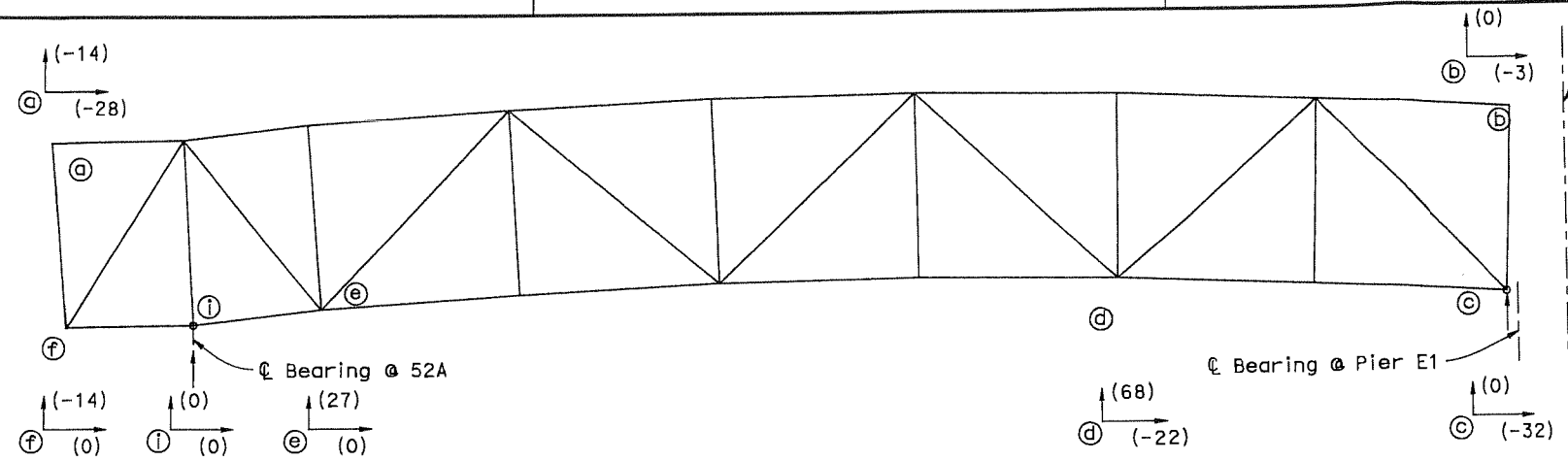

CAMBERED TRUSS
- On permanent bearings
- Unstressed

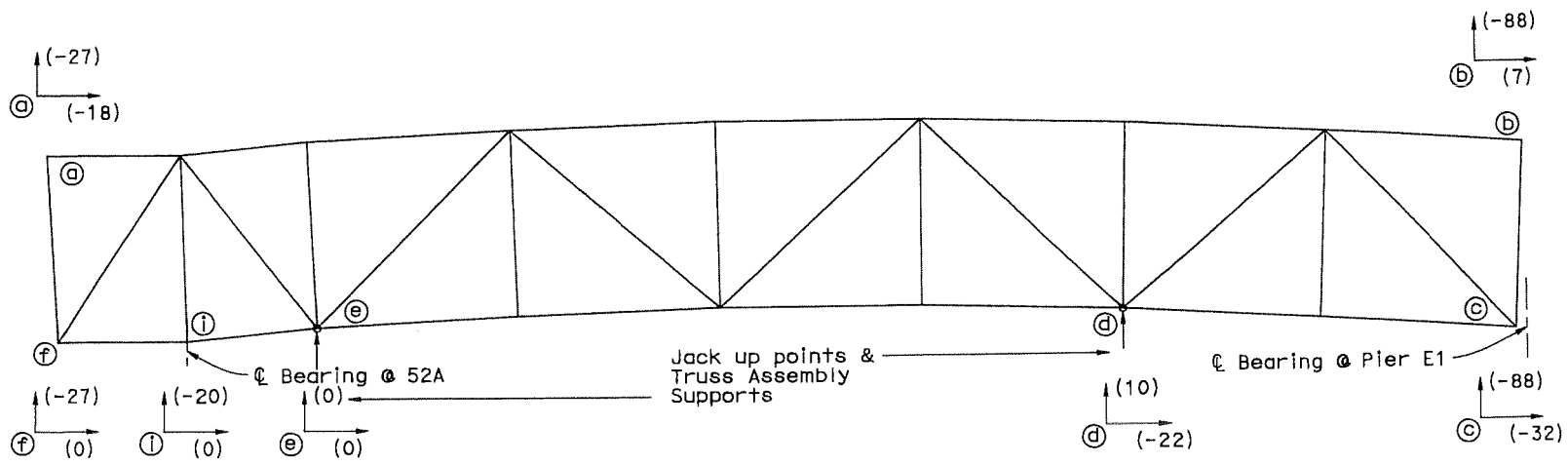

CAMBERED TRUSS
- On jack-up points/truss assembly supports
- Unstressed

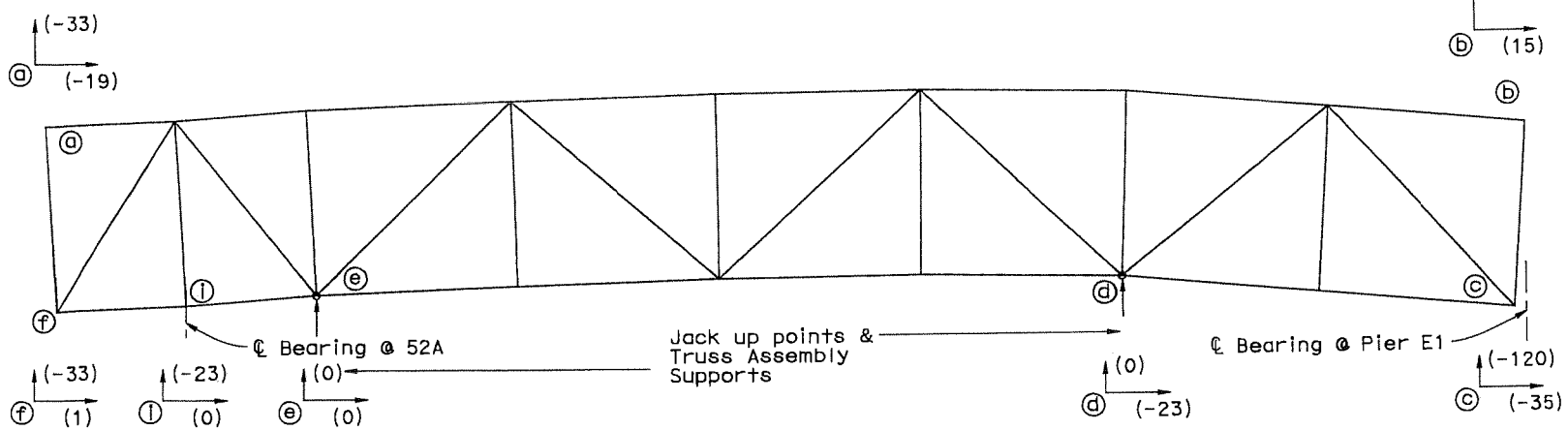

TRUSS AS ASSEMBLED
- Cambered truss
- On jack-up points
- Stressed (Self-weight applied)

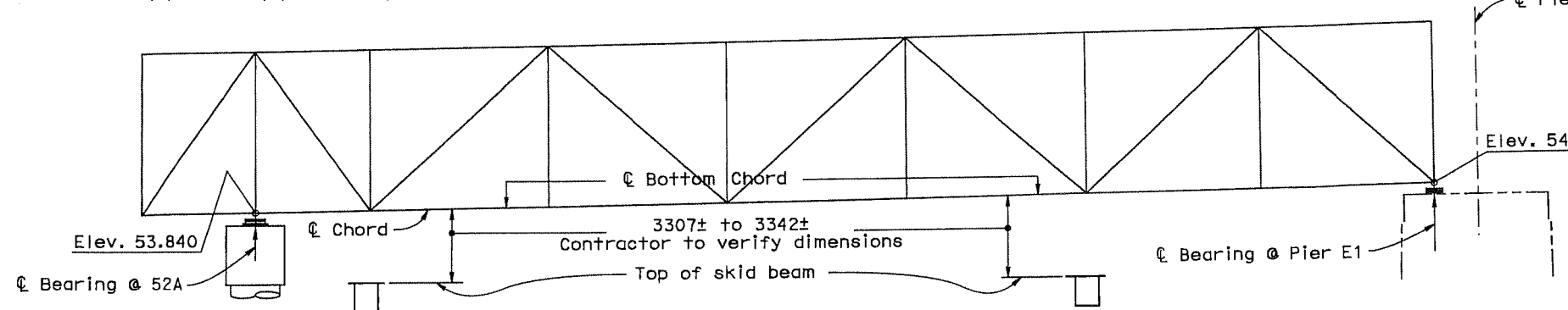

TRUSS IN REFERENCE POSITION
- Cambered truss
- On permanent bearings
- Stressed (Self-weight)
- Final condition (Reference position)

CAMBERS AND SELF-WEIGHT DEFLECTIONS

Loads & Reactions Are Based On:

TRUSS WEIGHT ESTIMATE AT ROLL-IN = 31,000 kN = 7,000 kips

ALL DIMENSIONS ARE IN METERS UNLESS OTHERWISE SHOWN

DIST	COUNTY	ROUTE	KILOMETER POST TOTAL PROJECT	SHEET No	TOTAL
04	SF	80	12.6/13.2		

Madon K. Sah
REGISTERED CIVIL ENGINEER
8-18-08
PLANS APPROVAL DATE

REGISTERED PROFESSIONAL ENGINEER — Madon Kumar Sah — No. C59203 — Exp 06/30/09 — CIVIL — STATE OF CALIFORNIA

The State of California or its officers or agents shall not be responsible for the accuracy or completeness of electronic copies of this plan sheet.

T.Y. LIN / MOFFATT & NICHOL
Two Harrison Street, Suite 500
San Francisco, CA 94105

MARK	DATE	REVISIONS	BY	CH'D	CCO#
1	9/30/08	ELIMINATE DECK OVERLAY	MC	SA	

CONTRACT CHANGE ORDER NO. 171
SHEET 20 OF 23

SAN FRANCISCO OAKLAND BAY BRIDGE
EAST SPAN SEISMIC SAFETY PROJECT
EAST TIE-IN
ETI TRUSS ROLL-IN PROCEDURES NO. 1

DESIGN	J. Otter, M. Chen	S. Cheng	
DETAILS	P. Zhao, S. Lee	A. Lee	
QUANTITIES	H. Nelson	A. Lee	

PREPARED FOR THE STATE OF CALIFORNIA DEPARTMENT OF TRANSPORTATION

M. Sah, PROJECT ENGINEER
S. Abbas, PROJECT MANAGER
CU
EA 0120R4

34-0006 (TEMP)
KILOMETER POST 12.6

T. Ostrom/M. Whiteside/A. Akinsanya
DESIGN OVERSIGHT
SIGN OFF DATE

DESIGN DETAIL SHEET (METRIC) (REV. 3/1/99)
●DATE● ●TIME● Pen Table File

ORIGINAL SCALE IN MILLIMETERS FOR REDUCED PLANS 0 10 20 30 40 50 60 70 80 90 100

DISREGARD PRINTS BEARING EARLIER REVISION DATES → 11/08/07 8/18/08 9/30/08

SHEET 166R1 OF 214

FILE => p:\bb\04-012001\eti\revision 1a\cietirip01.dgn
USERNAME => pzhao
DATE PLOTTED => 10/7/2008
TIME PLOTTED => 11:18:06 AM
100% PS&E

DIST	COUNTY	ROUTE	KILOMETER POST TOTAL PROJECT	SHEET No	TOTAL
04	SF	80	12.6/13.2		

Caltrans Metric

Madan K. Sah
REGISTERED CIVIL ENGINEER

8-18-08
PLANS APPROVAL DATE

REGISTERED PROFESSIONAL ENGINEER — Madan Kumar Sah — No. C59203 — Exp 06/30/09 — CIVIL — STATE OF CALIFORNIA

The State of California or its officers or agents shall not be responsible for the accuracy or completeness of electronic copies of this plan sheet.

T.Y. LIN / MOFFATT & NICHOL
Two Harrison Street, Suite 500
San Francisco, CA 94105

Phase 1: (Just prior to jack-up, after camber and under self-weight)

Assembly of the new truss.
- Truss is assembled on supports on top of skid beams. (See Note C)*
- Truss is assembled such that bearings are 100 mm above final positions.
- Concrete deck and barriers are cast.
- Overlay is not installed.
- Utilities are in place.
- Masonry plates on Bent 52A are installed and grouted.

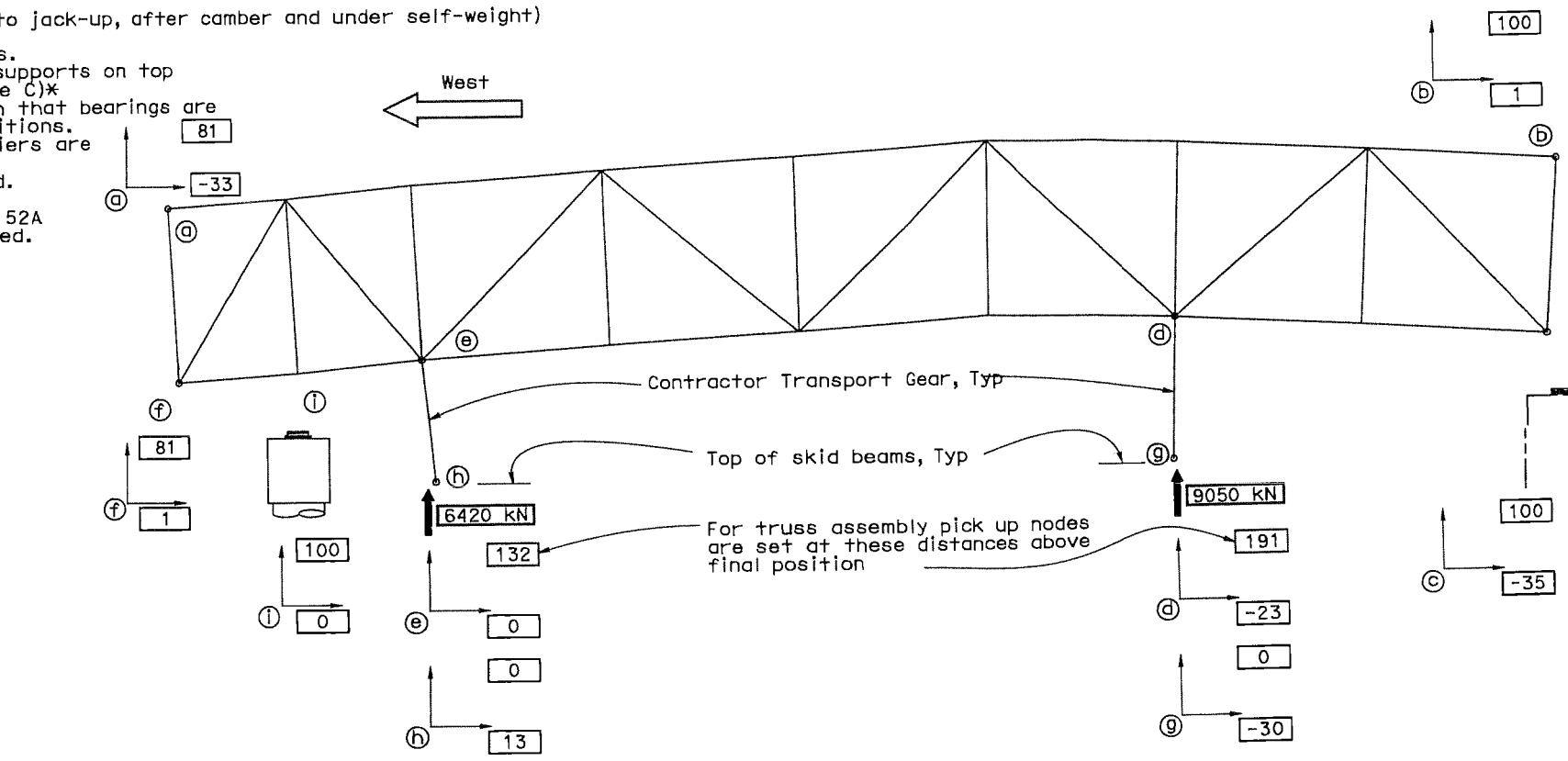

Notes:

1. All displacements are with respect to the final position of the truss, as shown in shadow lines.
2. The displacement notation is as following

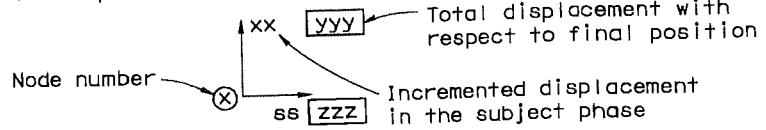

3. Reactions are given for each pickup point.
4. Displacements are as calculated. Allow for ±33% variation in actual displacements.
5. Add 7.5% contingency to all reactions.
6. Truss is to be transported in " Three Point Support" mode. Because truss will be carried as 3-point support system there will be no load increase due to skid beam deflections.
7. The choice of which skid bent line is to have its skid shoes hydraulically coupled is to be made by the Contractor.

Phase 2: (Raise truss to 150 mm above both East and West Bearings)

A. Install, level and grout masonry plates for pot bearings on Pier E1 after existing truss YB4 has moved north.
B. Install masonry plates for Lead Rubber Bearings in place. Do not grout.
C. Raise truss 50 mm at each skid bent for transport. (See Notes A, B, and C)*
D. Advance truss northward until positioned above East and West Bearings. (See Notes A, B and C)*
E. Adjust Truss position East/West & North/South.

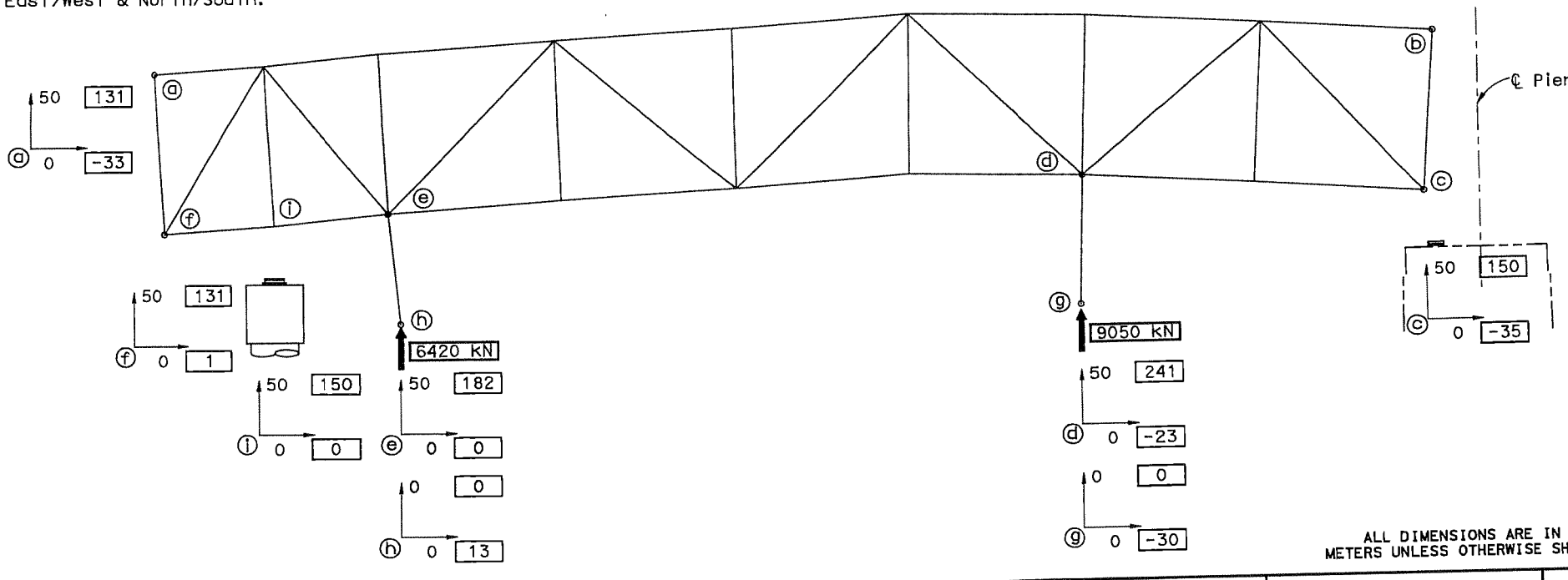

* See "ETI Truss Roll-In Procedures No. 4" sheet for further Notes (Notes A to E).

CONTRACT NO. 04-0120R4

CONTRACT CHANGE ORDER NO 171

SHEET 21 OF 23

ALL DIMENSIONS ARE IN METERS UNLESS OTHERWISE SHOWN

SAN FRANCISCO OAKLAND BAY BRIDGE
EAST SPAN SEISMIC SAFETY PROJECT

EAST TIE-IN

ETI TRUSS ROLL-IN PROCEDURES NO. 2

DESIGN	BY J. Otter, M. Chen	CHECKED S. Cheng
DETAILS	BY P. Zhao, S. Lee	CHECKED A. Lee
QUANTITIES	BY H. Nelson	CHECKED A. Lee

PREPARED FOR THE STATE OF CALIFORNIA DEPARTMENT OF TRANSPORTATION

M. Sah — PROJECT ENGINEER
S. Abbas — PROJECT MANAGER

34-0006 (TEMP) — KILOMETER POST 12.6

CU 34-0006 (TEMP)
EA 0120R4

T. Ostrom/M. Whiteside/A. Akinsanya
DESIGN OVERSIGHT

SIGN OFF DATE

DESIGN DETAIL SHEET (METRIC) (REV. 3/1/88)
◆DATE◆ ◆TIME◆ Pen Table File

ORIGINAL SCALE IN MILLIMETERS FOR REDUCED PLANS 0 10 20 30 40 50 60 70 80 90 100

DISREGARD PRINTS BEARING EARLIER REVISION DATES → 11/09/07 8/18/08

SHEET 167 OF 214

FILE => p:\bb\04-012001\etl\roll-out roll-in 8-18-08\aletlrlp02.dgn

100% PS&E

DATE PLOTTED => 8/19/2008 TIME PLOTTED => 2:34:44 PM

USERNAME => Alee

DIST	COUNTY	ROUTE	KILOMETER POST TOTAL PROJECT	SHEET No	TOTAL
04	SF	80	12.6/13.2		

Madan K. Sah
REGISTERED CIVIL ENGINEER

8-18-08
PLANS APPROVAL DATE

REGISTERED PROFESSIONAL ENGINEER — Madan Kumar Sah, No. C59203, Exp. 06/30/09, CIVIL, STATE OF CALIFORNIA

The State of California or its officers or agents shall not be responsible for the accuracy or completeness of electronic copies of this plan sheet.

T.Y. LIN / MOFFATT & NICHOL
Two Harrison Street, Suite 500
San Francisco, CA 94105

Phase 3: (Truss almost in contact with East and West Bearings)

A. Lower Truss at both ends until the bearings are about to make contact (150 mm of lowering).

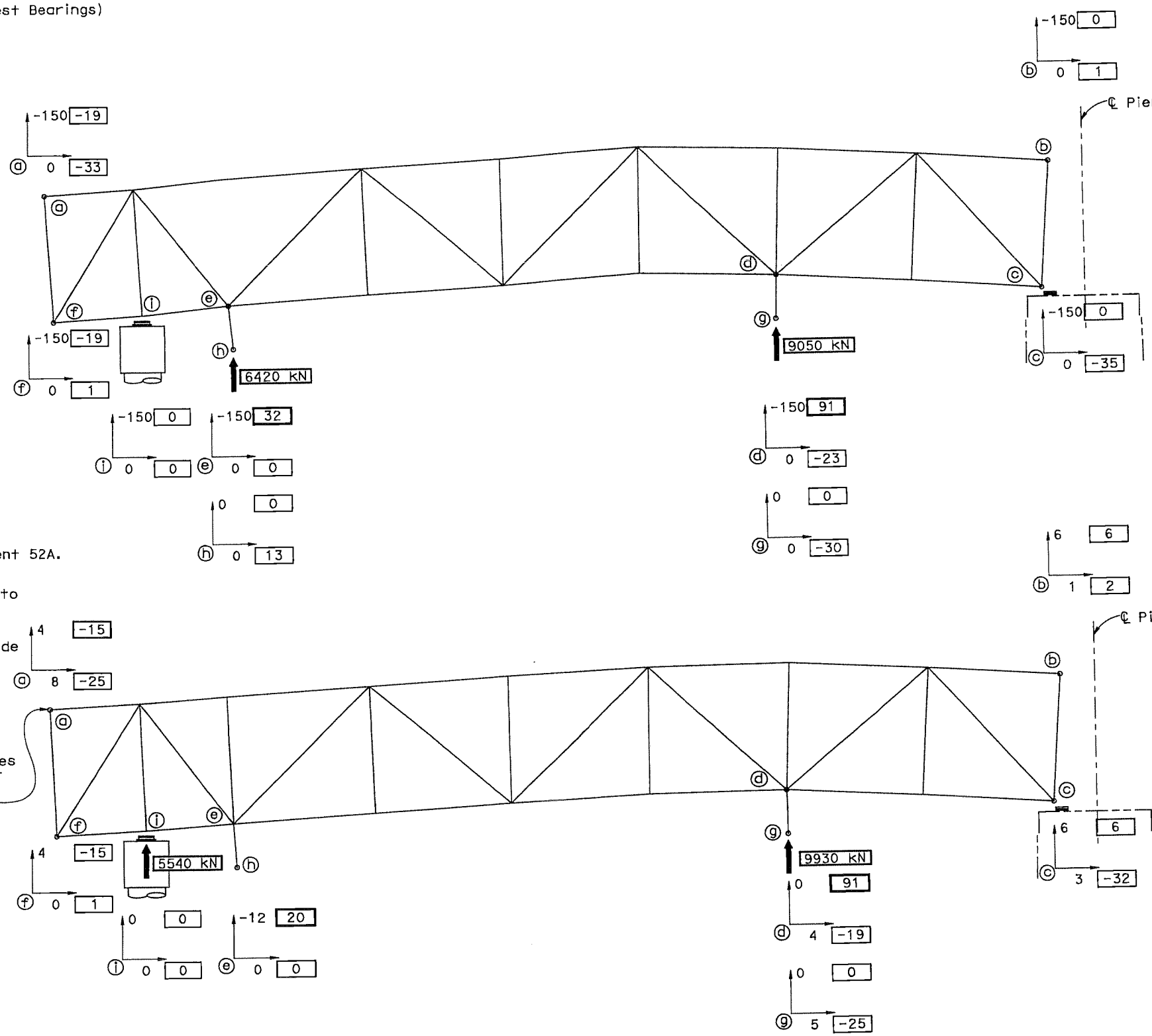

* See "ETI Truss Roll-In Procedures No 4" sheet for further Notes (Notes A to E).

Phase 4: (West set-down)

A. Set down west bearings onto masonry plates on Bent 52A. (See Note D)*

B. Lower skid shoe jacks at skid Bent A (west bent) to transfer load to bearings on Bent 52A.

C. Lower skid bent A skid shoe jacks further to provide at least 75 mm clearance between underside of truss and top of transport gear.

D. Start installation of west expansion joints. (See Note E)*

E. Weld-down of Bent 52A pot bearings may now start.

CONTRACT NO. 04-0120R4

CONTRACT CHANGE ORDER NO 171

SHEET 22 OF 23

ALL DIMENSIONS ARE IN METERS UNLESS OTHERWISE SHOWN

SAN FRANCISCO OAKLAND BAY BRIDGE
EAST SPAN SEISMIC SAFETY PROJECT

EAST TIE-IN

ETI TRUSS ROLL-IN PROCEDURES NO. 3

DESIGN	BY J. Otter, M. Chen	CHECKED S. Cheng	PREPARED FOR THE STATE OF CALIFORNIA DEPARTMENT OF TRANSPORTATION
DETAILS	BY P. Zhao, S. Lee	CHECKED A. Lee	
QUANTITIES	BY H. Nelson	CHECKED A. Lee	

T. Ostrom/M. Whiteside/A. Akinsanya
DESIGN OVERSIGHT

SIGN OFF DATE

M. Sah
PROJECT ENGINEER
S. Abbas
PROJECT MANAGER
CU
EA 0120R4

34-0006 (TEMP)
KILOMETER POST
12.6

DISREGARD PRINTS BEARING EARLIER REVISION DATES → 11/09/07 8/18/08

SHEET 168 OF 214

DESIGN DETAIL SHEET (METRIC) (REV. 3/1/98)
DATE *TIME* Pen Table File

ORIGINAL SCALE IN MILLIMETERS FOR REDUCED PLANS 0 10 20 30 40 50 60 70 80 90 100

FILE => p:\bb\04-012001\etl\roll-out roll-in 8-18-08\cietlrip03.dgn

100% PS&E

FILE => p:\bb\04-012001\etl\roll-out roll-in 8-18-08\cietlrip03.dgn
TIME PLOTTED => 2:34:46 PM
DATE PLOTTED => 8/19/2008
USERNAME => ALee

DIST	COUNTY	ROUTE	KILOMETER POST TOTAL PROJECT	SHEET No	TOTAL
04	SF	80	12.6/13.2		

Madan K. Sah
REGISTERED CIVIL ENGINEER

8-18-08
PLANS APPROVAL DATE

REGISTERED PROFESSIONAL ENGINEER — Madan Kumar Sah — No. C59203 — Exp. 06/30/09 — CIVIL — STATE OF CALIFORNIA

The State of California or its officers or agents shall not be responsible for the accuracy or completeness of electronic copies of this plan sheet.

T.Y. LIN / MOFFATT & NICHOL
Two Harrison Street, Suite 500
San Francisco, CA 94105

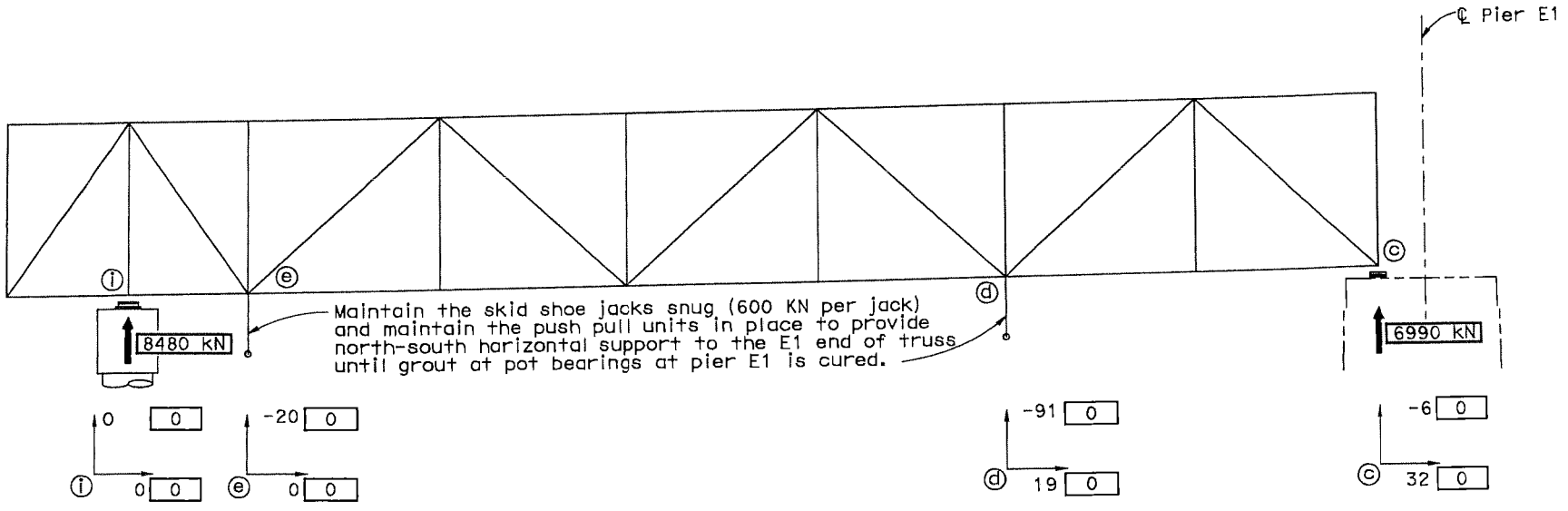

1

Phase 5: (East set-down)

A. Maintain vertical load and north-south restraint at east skid bent (skid bent B) skid shoes until the grout below the masonry plates for the pot bearings at Pier E1 is strong enough to bear weight. (See Note D)

B. Start installation of the east expansion joints. (See Note E)

C. When masonry plate grout for the pot bearings at Pier E1 has achieved the required strength, lower further at skid Bent B to transfer almost all load to the Pier E1 pot bearings. Maintain the skid shoe jacks snug (600 kN per jack) and maintain the push pull units in place to provide north-south horizontal support to the E1 end of truss.

D. Install the temporary restraint assembly on the pot bearings at Pier E1.

E. Release the skid shoes at skid Bent B.

F. Remove the skid shoes and support structures at all four transport points.

G. Install barrier wall closures.

H. When the expansion joint grout reaches the specified strength, the bridge may be re-opened to traffic.

I. At a later date, raise masonry plates to be snug against lead rubber bearings at pier E1. Weld bearings to the masonry plates. Grout masonry plates.

GENERAL NOTES RELATING TO TRANSPORT OF ETI TRUSS

A. The Contractor is to prepare a detailed, step by step, procedure for the operation incorporating and fully integrating the steps shown on these drawings with the detailed operating procedures, steps, and other requirements associated with work by the Contractor. These procedures are to be submitted to the Engineer for approval.

B. Detailed operational procedures for executing, controlling and monitoring the lifting and moving of the trusses are to be developed by the Contractor and submitted to the Engineer for approval. It is the responsibility of the Contractor to implement, control and monitor these procedures during moving operations.

C. Transport gear and the support structures for ETI truss erection are to be designed and supplied by the Contractor. The Contractor to submit plans and calculations for approval.

D. For details of bearings and bearing installation, see "Support at Pier E1 Details" sheets and "Bearing Details" sheets.

E. For details of expansion joints and expansion joint installation, see "Pier E1 Expansion Joint Details" sheets and "Bent 52A Expansion Joint Details" sheet.

MARK	DATE	REVISIONS DESCRIPTIONS	BY	CH'D	CCO#
1	9/30/08	ELIMINATE DECK OVERLAY	MC	SA	

CONTRACT CHANGE ORDER NO. 171
SHEET 23 OF 23

ALL DIMENSIONS ARE IN METERS UNLESS OTHERWISE SHOWN

SAN FRANCISCO OAKLAND BAY BRIDGE
EAST SPAN SEISMIC SAFETY PROJECT

EAST TIE-IN

ETI TRUSS ROLL-IN PROCEDURES NO. 4

DESIGN	J. Otter, M. Chen	S. Cheng	
DETAILS	P. Zhao, S. Lee	A. Lee	
QUANTITIES	H. Nelson	A. Lee	

T. Ostrom/M. Whiteside/A. Akinsanya
DESIGN OVERSIGHT

SIGN OFF DATE

PREPARED FOR THE STATE OF CALIFORNIA DEPARTMENT OF TRANSPORTATION

M. Sah
PROJECT ENGINEER
S. Abbas
PROJECT MANAGER

CU
EA 0120R4

34-0006 (TEMP)
KILOMETER POST
12.6

DISREGARD PRINTS BEARING EARLIER REVISION DATES → 11/09/07 | 8/18/08 | 9/30/08

SHEET 169R1 OF 214

DESIGN DETAIL SHEET (METRIC) (REV. 3/1/98)
●DATE● ●TIME● Pen Table File

ORIGINAL SCALE IN MILLIMETERS FOR REDUCED PLANS 0 10 20 30 40 50 60 70 80 90 100

FILE => p:\bb\04-012001\eti\revision 1a\etitrip04.dgn

100% PS&E

FILE => p:\bb\04-012001\eti\revision 1a\etitrip04.dgn
TIME PLOTTED => 11:18:10 AM
DATE PLOTTED => 10/7/2008
USERNAME => pzhao

STATE OF CALIFORNIA - DEPARTMENT OF TRANSPORTATION

CONTRACT CHANGE ORDER MEMORANDUM

TO: MIKE FORNER / DEANNA VILCHECK	FILE: E.A. 04 - 0120R4
	CO-RTE-PM SF-80-12.6/13.2
FROM: BILL CASEY	FED. NO. ACBRIM-080-1(097)N
CCO#: 171 SUPPLEMENT#: 0 Category Code: CHXX	CONTINGENCY BALANCE (incl. this change) $48,845,213.59
COST: $10,147,370.00 INCREASE ☑ DECREASE ☐	HEADQUARTERS APPROVAL REQUIRED? ☑ YES ☐ NO
SUPPLEMENTAL FUNDS PROVIDED: $0.00	IS THIS REQUEST IN ACCORDANCE WITH ENVIRONMENTAL DOCUMENTS? ☑ YES ☐ NO
CCO DESCRIPTION: ETI Roll Out / Roll In	**PROJECT DESCRIPTION:** CONSTRUCT ROUTE 80 TEMP BYPASS STRUCTURE

Original Contract Time:	Time Adj. This Change:	Previously Approved CCO Time Adjustments:	Percentage Time Adjusted: (including this change)	Total # of Unreconciled Deferred Time CCO(s): (including this change)
475 Day(s)	DEF Day(s)	1195 Day(s)	252 %	8

THIS CHANGE ORDER PROVIDES FOR:

the roll out of the existing steel truss and the roll in of the new steel truss of the East Tie-In structure.

This project, the Temporary Bypass Structure (TBS), was awarded in March 2004 to construct a detour that will allow for the tie in of the new east span of the San Francisco Oakland Bay Bridge to Yerba Buena Island. The TBS encompasses three main structures, the East Tie-In (ETI) to the existing bridge, the West Tie-In (WTI) to Yerba Buena Island and the Viaduct structure between the two tie ins.

The original contract was awarded as a performance based contract with the contractor responsible for the design of the structures based upon meeting specified design criteria. The Department issued a December 14, 2006 memo entitled Strategy for South-South Detour Contract Completion which was approved by Tony Anziano (Toll Bridge Program Manager), Richard Land (Chief Engineer) and subsequently by the TBPOC. This memo recommended that the design of the ETI structure be assumed by the Department as opposed to the as-bid performance based contractor design.

The new design of the ETI structure provides for a roll-out / roll-in concept with a new double deck steel truss span being erected adjacent to the existing span and then rolled into place after the existing span is rolled out. This change order provides for the actual operations concerning the roll out of the existing structure and the roll in of the new structure.

The work encompassed under this change includes furnishing and erecting the 8 separate steel support structures that distribute the weight of the 2 trusses to the skid bent support system during the roll out and roll in (RORI) operations along with furnishing, installing and removing the 8 skid assemblies, including push pull units and hydraulic jacks, which will provide for the actual roll out and roll in of the structures.

The RORI operations are currently scheduled to be performed over a planned 4-day closure of the San Francisco Oakland Bay Bridge during Labor Day Weekend of 2009. Support costs associated with this work during the actual weekend along with the removal of the 8 structural steel supports and numerous other operations indirectly associated with the RORI operations and weekend closure are deferred and shall be paid under separate change orders. The complete scopes of many of these deferred items of work have not been clearly defined to date. Other items of work have been paid under separate change orders as those scopes of work have been defined and compensation has been agreed to.

Compensation for the work of this change shall be paid as extra work at an agreed lump sum price of $10,147,370.00, which shall be financed from the contract's contingency funds. A cost analysis is on file.

Adjustment of contract time is deferred pending completion of the work specified in this change as it may become the controlling operation in accordance with Section 8-1.07 "Liquidated Damages", of the Standard Specifications and Section 10-1.20 "Time Related Overhead (TRO)" of the Special Provisions.

Compensation for delays resulting from this work will be made in accordance with Section 8-1.09 "Right of Way Delays" of the Standard Specifications and Section 10-1.20 "Time Related Overhead" of the Special Provisions.

This change was concurred by Alec Melkonians - Asst. Project Manager, Hong Wong - Project Engineer, and Patrick Treacy - HQ Asst. Construction Coordinator. TBPOC Approval granted on June, 4, 2009.

ADA Notice: For individuals with sensory disabilities, this document is available in alternate formats. For information call: (916) 654-6410 or TDD (916) 654-3880 or write Records and Forms Management, 1120 N Street, MS-89, Sacramento, CA 95814

Maintenance concurrence is not required as this change doesn't affect any permanent roadway features.

CONCURRED BY:		
Construction Engineer:	Bill Casey, Resident Engineer	Date 6-4-09
Bridge Engineer:	Mike Whiteside	Date 8/20/08
Project Engineer:	Hong Wong, PE	Date 6-5-09
Project Manager:	Alec Melkonians	Date 6-5-09
FHWA Rep.:		Date
Environmental:		Date
Other (specify):	Patrick Treacy, HQ Asst.Const.Co	Date 6-5-09
Other (specify):		Date
District Prior Approval By:		Date
HQ (Issue Approve) By:	Bob Molera, HQ CCO Engineer	Date 6/8/09
Resident Engineer's Signature:		Date 6-4-09

ESTIMATE OF COST

	THIS REQUEST	TOTAL TO DATE
ITEMS	$0.00	$0.00
FORCE ACCOUNT	$0.00	$0.00
AGREED PRICE	$10,147,370.00	$10,147,370.00
ADJUSTMENT	$0.00	$0.00
TOTAL	$10,147,370.00	$10,147,370.00

FEDERAL PARTICIPATION

☐ PARTICIPATING ☐ PARTICIPATING IN PART ☑ NONE
☐ NON-PARTICIPATING (MAINTENANCE) ☐ NON-PARTICIPATING

FEDERAL SEGREGATION (if more than one Funding Source or P.I.P. type)
☐ CCO FUNDED PER CONTRACT ☐ CCO FUNDED AS FOLLOWS

FEDERAL FUNDING SOURCE	PERCENT

ADA Notice: For individuals with sensory disabilities, this document is available in alternate formats. For information call: (916) 654-6410 or TDD (916) 654-3880 or write Records and Forms Management, 1120 N Street, MS-89, Sacramento, CA 95814.

CONTRACT CHANGE ORDER

Change Requested by: Engineer

CCO 172	Suppl. No. 0	Contract No. 04 - 0120R4	Road SF-80-12.6/13.2	FED. AID LOC.: ACBRIM-080-1(097)N

To: **CC MYERS INC**

You are directed to make the following changes from the plans and specifications or do the following described work not included in the plans and specifications for this contract. ***NOTE: This change order is not effective until approved by the Engineer.***

Description of work to be done, estimate of quantities and prices to be paid. (Segregate between additional work at contract price, agreed price and force account.) Unless otherwise stated, rates for rental of equipment cover only such time as equipment is actually used and no allowance will be made for idle time. This last percentage shown is the net accumulated increase or decrease from the original quantity in the Engineer's Estimate.

Extra Work at Force Account:

The Engineer will require stair and scaffold access for several months after erection, until the Engineer authorizes its removal. In addition to the agreed lump sum, the Contractor will be paid on a Force Account basis for the scaffold platform system equipment rental. The removal work is included in the above lump sum price.

Estimated Cost of Extra Work at Force Account $30,000.00

Extra Work at Lump Sum:

Clean and paint existing structural steel in accordance with the attached Special Provisions (Sheets 3 through 7) and Contract Plans (Sheets 8 through 11) of this change order.

Design, provide, install, and remove scaffolding access platform system, including handrails and toe boards in accordance with attached Special Provisions. Provide and install an extra 19 mm (3/4 inch) thick covering layer of plywood decking on the platforms to provide a firm, smooth, trip-hazard free work surface suitable for containment of dust and debris. Provide and post signs in conspicuous locations to show the maximum intended working load for each scaffold. The system shall be designed to allow access to accomplish all cleaning and painting for this change order, and to continue to provide a contiguous access system for the Engineer and Contractor to conduct examinations and further work on the existing bridge at the cleaned and painted areas. One complete stair tower access from the ground to the platform is included under this change order.

This change order includes full compensation for any required testing and legal disposal of rinse water and blasting debris materials generated during the work.

For this extra work, the Contractor will be compensated $210,450.00. This lump sum constitutes full compensation, including markups, for furnishing all labor, material, tools, equipment, and incidentals for doing the work involved in this change.

Total Cost of Extra Work at Lump Sum $210,450.00

CONTRACT CHANGE ORDER

Change Requested by: Engineer

CCO 172	Suppl. No. 0	Contract No. 04 - 0120R4	Road SF-80-12.6/13.2	FED. AID LOC.: ACBRIM-080-1(097)N

Estimated Cost: Increase ☑ Decrease ☐ $240,450.00

By reason of this order the time of completion will be adjusted as follows: 0 days

Submitted by

Signature	Resident Engineer	Date
	BILL CASEY	12-12-08

Approval Recommended by

Signature	Area Construction Manager	Date
Deanna Vilcheck	DEANNA VILCHECK	12/16/08

Engineer Approval by

Signature	Area Construction Manager	Date
Deanna Vilcheck	DEANNA VILCHECK	2/4/09

We the undersigned contractor, have given careful consideration to the change proposed and agree, if this proposal is approved, that we will provide all equipment, furnish the materials, except as may otherwise be noted above, and perform all services necessary for the work above specified, and will accept as full payment therefor the prices shown above.

NOTE: If you, the contractor, do not sign acceptance of this order, your attention is directed to the requirements of the specifications as to proceeding with the ordered work and filing a written protest within the time therein specified.

Contractor Acceptance by

Signature	(Print name and title)	Date
	DANIEL E. HUMICK, PRESIDENT	1/26/09

CONTRACT NO. 04-0120R4

The special provisions contained herein have been prepared by or under the direction of the following Registered Person.

STRUCTURES

REGISTERED CIVIL ENGINEER

REGISTERED PROFESSIONAL ENGINEER
STEVE MARGARIS
No. 36845
Exp. 6/22/10
CIVIL
STATE OF CALIFORNIA

CONTRACT NO. 04-0120R4

CONTRACT CHANGE ORDER NO 172

SHEET 3 OF 11

10-1.__ CLEAN AND PAINT EXISTING STRUCTURAL STEEL

Metal surfaces of the existing structure shall be cleaned and painted in conformance with the provisions in Section 59-2, "Painting Structural Steel," Section 59-3, "Painting Galvanized Surfaces," and Section 91, "Paint," of the Standard Specifications and these special provisions.

The limits of steel surfaces to be cleaned and painted shall be as shown on the plans.

The existing paint systems consist of materials listed in "Existing Highway Facilities" of these special provisions.

Prior to performing any painting or paint removal, the Contractor shall submit to the Engineer, in conformance with the provisions in Section 5-1.02, "Plans and Working Drawings," of the Standard Specifications, 3 copies of a separate Painting Quality Work Plan (PQWP) for each item of work for which painting or paint removal is to be performed. As a minimum, each PQWP shall include the following:

A. The name of each Contractor or subcontractor to be used.
B. One copy each of all current ASTM and "SSPC: The Society for Protective Coatings" specifications or qualification procedures applicable to the painting or paint removal to be performed. These documents shall become the permanent property of the Department.
C. A copy of the coating manufacturer's guidelines and recommendations for surface preparation, painting, drying, and curing of painted structural steel, including testing methods and maximum allowable levels for soluble salts.
D. Proposed methods and equipment to be used for any paint application.
E. Proof of each of any required certifications, SSPC-QP 1 or SSPC-QP 2.

    1. In lieu of certification in conformance with the requirements in SSPC-QP 1 for this project, the Contractor may submit written documentation showing conformance with the requirements in Section 3, "General Qualification Requirements," of SSPC-QP 1.

F. Proposed methods to control environmental conditions in accordance with the manufacturer's recommendations and these special provisions.
G. Proposed methods to protect the coating during the curing period.
H. Proposed rinse water collection plan.
I. A detailed paint repair plan for the repair of damaged areas.
J. Procedures for containing blast media and water during application of coatings and coating repair of erected steel.
K. Examples of proposed daily reports for all testing to be performed, including type of testing, location, lot size, time, weather conditions, test personnel, and results.

Prior to submitting the PQWP, a prepainting meeting between the Engineer, the Contractor, and a representative from each entity performing painting for this project shall be held to discuss the requirements for the PQWP.

The Engineer shall have 3 weeks to approve the PQWP submittal after a complete plan has been received. No painting or paint removal shall be performed until the PQWP for that work is approved by the Engineer. Should the Engineer fail to complete the review within this time allowance and if, in the opinion of the Engineer, the Contractor's controlling operation is delayed or interfered with by reason of the delay in approving the PQWP, the delay will be considered a right of way delay in conformance with the provisions in Section 8-1.09, "Right of Way Delays," of the Standard Specifications.

It is understood that the Engineer's approval of the Contractor's PQWP shall not relieve the Contractor of any responsibility under the contract for the successful completion of the work in conformity with the requirements of the plans and specifications.

The Contractor shall provide enclosures to permit cleaning and painting during inclement weather. Provisions shall be made to control atmospheric conditions inside the enclosures within specified limits during cleaning and painting operations, drying to solvent insolubility, and throughout the curing period in accordance with the manufacturer's recommendations and these special provisions. Full compensation for providing and maintaining such enclosures shall be considered as included in the prices paid for the various contract items of work requiring paint and no additional compensation will be allowed therefor.

Fresh, potable water with a maximum chloride content of 75 mg/L and a maximum sulfate content of 200 mg/L shall be used for water rinsing or pressure washing operations. No continuous recycling of rinse water will be permitted. If rinse water is collected into a tank and subsequent testing determines the collected water conforms to the specified requirements, reuse may be permitted by the Engineer if no collected water is added to the tank after sample collection for determination of conformance to specified requirements.

CLEANING

Metal surfaces shall be blast cleaned in conformance with the provisions in Section 59-2.03, "Blast Cleaning," of the Standard Specifications. Blast cleaning shall not be performed until the surfaces are thoroughly dry.

Mineral and slag abrasives used for blast cleaning steel surfaces shall conform to the requirements for Class A, Grade 2 to 3 abrasives contained in SSPC-AB 1, "Mineral and Slag Abrasives," of the "SSPC: The Society for Protective Coatings," and shall not contain hazardous material.

Steel abrasives used for blast cleaning steel surfaces shall comply with the requirements of SSPC-AB 3, "Ferrous Metal Abrasive," of the "SSPC: The Society for Protective Coatings." If steel abrasive is recycled through shop or field abrasive blast cleaning units, the recycled abrasive shall conform to the requirements of SSPC-AB 2, "Specification for Cleanliness of Recycled Ferrous Metallic Abrasive," of the "SSPC: The Society for Protective Coatings."

A Certificate of Compliance conforming to the provisions in Section 6-1.07, "Certificates of Compliance," of the Standard Specifications and a Material Safety Data Sheet shall be furnished prior to use for each shipment of blast cleaning material for cleaning existing steel.

Abrasive blast cleaned surfaces shall be tested by the Contractor for soluble salts using a Class A or B retrieval method as described in Technology Guide 15, "Field Methods for Retrieval and Analysis of Soluble Salts on Steel and Other Nonporous Substrates," of the "SSPC: The Society for Protective Coatings," and cleaned so the maximum level of soluble salts does not exceed the lesser of the coating manufacturer's written recommendations or 10 micrograms per square centimeter. Areas of abrasive blast cleaned steel shall be tested at the rate of 3 tests for the first 100 square meters prepared per day, and one test for each additional 100 square meters or portion thereof, at locations selected by the Engineer. When less than 100 square meters of surface area is prepared in a shift, at least 2 tests shall be performed. If levels of soluble salts exceed the maximum allowed by these special provisions, the entire area represented by the testing will be rejected. The Contractor shall perform additional cleaning and testing of rejected areas until soluble salt levels conform to these requirements.

PAINTING

Paint shall be applied to existing metal surfaces in conformance with the following provisions:

A. Precede each specified undercoat by a stripe coat on all edges, corners, seams, crevices, interior angles, junctions of joining members, weld lines, and similar surface irregularities. This stripe coat shall be of sufficient thickness to completely hide the surface being covered and shall be followed as soon as practical by the application of the full undercoat to its specified thickness.
B. Blast cleaned areas shall be coated with the following undercoat paint system in the order listed:

1. The first undercoat paint conforming to the requirements for Red Primer Paint-Waterborne, Formula PWB 145D shall be applied in one or more applications to a dry film thickness of not less than 50 µm nor more than 75 µm.
2. The second undercoat paint conforming to the requirements for Pink Primer Paint-Waterborne, Formula PWB 146D shall be applied in one or more applications to a dry film thickness of not less than 50 µm nor more than 75 µm.
3. The total dry film thickness of all undercoats shall be not less than 100 µm nor more than 150 µm.

A minimum of 12 hours drying time shall be allowed before applying the succeeding undercoat.

The 2 undercoats shall be applied within 30 days of blast cleaning of existing metal surfaces.

MEASUREMENT AND PAYMENT

Dry spot blast cleaning and undercoat painting of blast cleaned areas of existing surfaces will be measured by the square meter of spot blast cleaned areas, and will be paid for as spot blast clean and paint undercoat.

The contract price paid per square meter for spot blast clean and paint undercoat shall include full compensation for furnishing all labor, materials, tools, equipment, and incidentals, and for doing all the work involved in dry spot blast cleaning and painting undercoat on the existing surfaces complete in place, as shown on the plans, as specified in the Standard Specifications and these special provisions, and as directed by the Engineer.

CONTRACT NO. 04-0120R4

CONTRACT CHANGE ORDER NO 172

SHEET 6 OF 11

SCAFFOLDING

Scaffolding shall be defined in accordance with and shall conform to the Construction Safety Orders of the Division of Occupational Safety and Health and these special provisions.

If scaffolding is constructed for this project over or adjacent to traffic, or suspended from the traveled way, the Contractor shall submit to the Engineer working drawings for scaffolding systems in conformance with Section 5-1.02, "Plans and Working Drawings'" of the Standard Specifications, and these special provisions.

Scaffolding working drawings shall include the following:

A. Descriptions, calculations, and values for all loads anticipated during the erection, use, and removal of scaffolding.
B. Methods and equipment for erecting, moving, and removing scaffolding.
C. Design details including bolt layouts, welding details, and any connections to existing structures.
D. Stress sheets including a summary of computed stresses in the (1) scaffolding, (2) connections between scaffolding and any existing structures and (3) existing load supporting members. The computed stresses shall include the effects of erection, movement, and removal of the scaffolding.

If manufactured scaffolding is used, the manufacturer's name, address, and phone number shall be shown on the working drawings.

The working drawings shall be stamped and signed by an engineer who is registered as a Civil Engineer. In addition, prior to submitting the working drawings to the Engineer, the working drawings shall be stamped and signed by an independent reviewer who is registered as a Civil Engineer in the State of California. The independent reviewer shall not be employed by the same entity preparing the working drawings.

The Contractor shall allow 21 days for the review of a complete submittal for scaffolding working drawings. In the event the Engineer fails to complete the review within the time allowed, and if, in the opinion of the Engineer, completion of the work is delayed or interfered with by reason of the Engineer's delay in completing the review, the Contractor will be compensated for any resulting loss, and an extension of time will be granted, in the same manner as provided for in Section 8-1.09, "Right of Way Delays," of the Standard Specifications.

Welding for the manufacturing and erection of scaffolding shall conform to the requirements in AWS D1.1 or D1.2 for steel or aluminum construction respectively.

Full compensation for conforming to the above requirements shall be considered as included in the contract prices paid for the various contract items of work, and no additional compensation will be allowed therefor.

CONTRACT NO. 04-012024

CONTRACT CHANGE ORDER NO 172

SHEET 7 OF 11

DIST	COUNTY	ROUTE	KILOMETER POST TOTAL PROJECT	SHEET No.	TOTAL
04	SF	80	12.6/13.2		

Caltrans Metric

REGISTERED CIVIL ENGINEER

PLANS APPROVAL DATE

The State of California or its officers or agents shall not be responsible for the accuracy or completeness of electronic copies of this plan sheet.

REGISTERED PROFESSIONAL ENGINEER Michael Whitesides No. C47927 Exp. 12.31.09 CIVIL STATE OF CALIFORNIA

T.Y. LIN / MOFFATT & NICHOL
Two Harrison Street, Suite 500
San Francisco, CA 94105

Contract No. 04-0120R4
Contract Change Order No. 172
Sheet 8 of 11

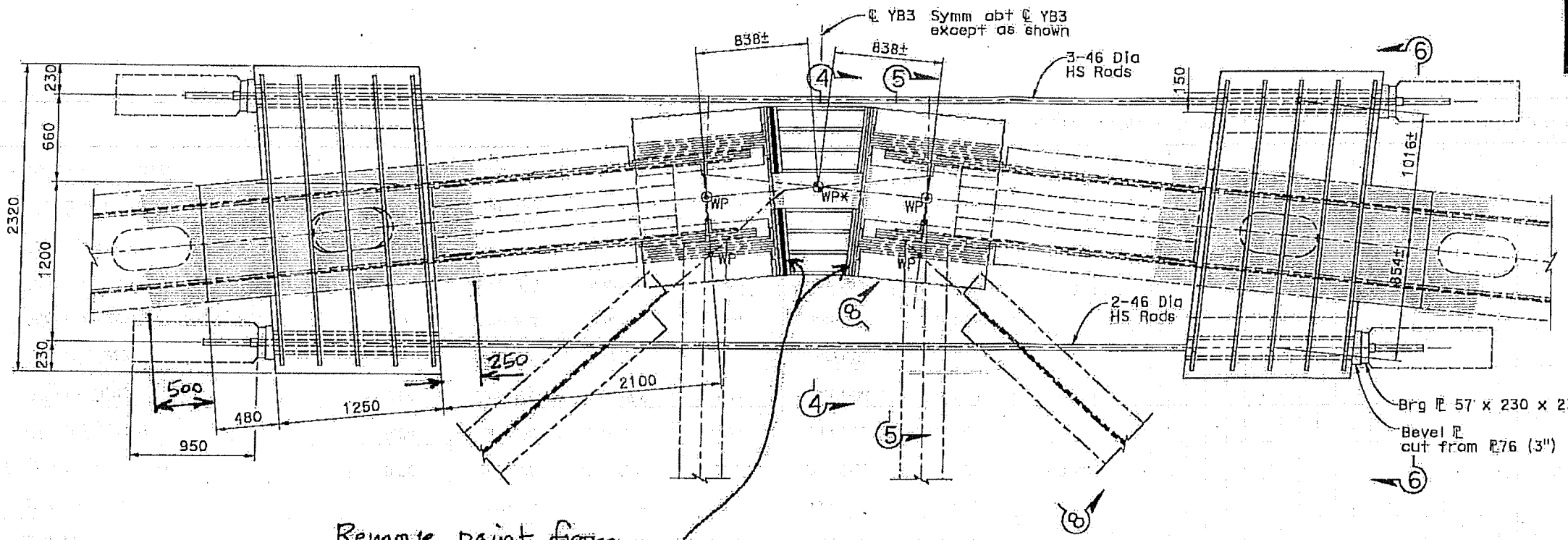

NORTH SIDE PLAN
1:20

Remove paint from inside and outside surfaces of bearing shoe end plate and top of bearing plate, typ (see reference as-built Ⓒ attached)

Remove paint from top and bottom surfaces of top and bottom plates and angles of lower chord, typ (see reference as-built Ⓐ & Ⓑ attached)

Legends:

WP Working Point

WP* Work Point at intersection of lower chord ℄ and ℄ YB3

Indicates limits of paint removal from existing steel surfaces

Notes:

1. The contractor shall verify all controlling field dimensions before ordering or fabricating any material.
2. For Detail A, see "Existing Truss Details No. 7" sheet.
3. For Sections 1-1, 2-2, 3-3 and 7-7, see "Existing Truss Details No. 8" sheet.

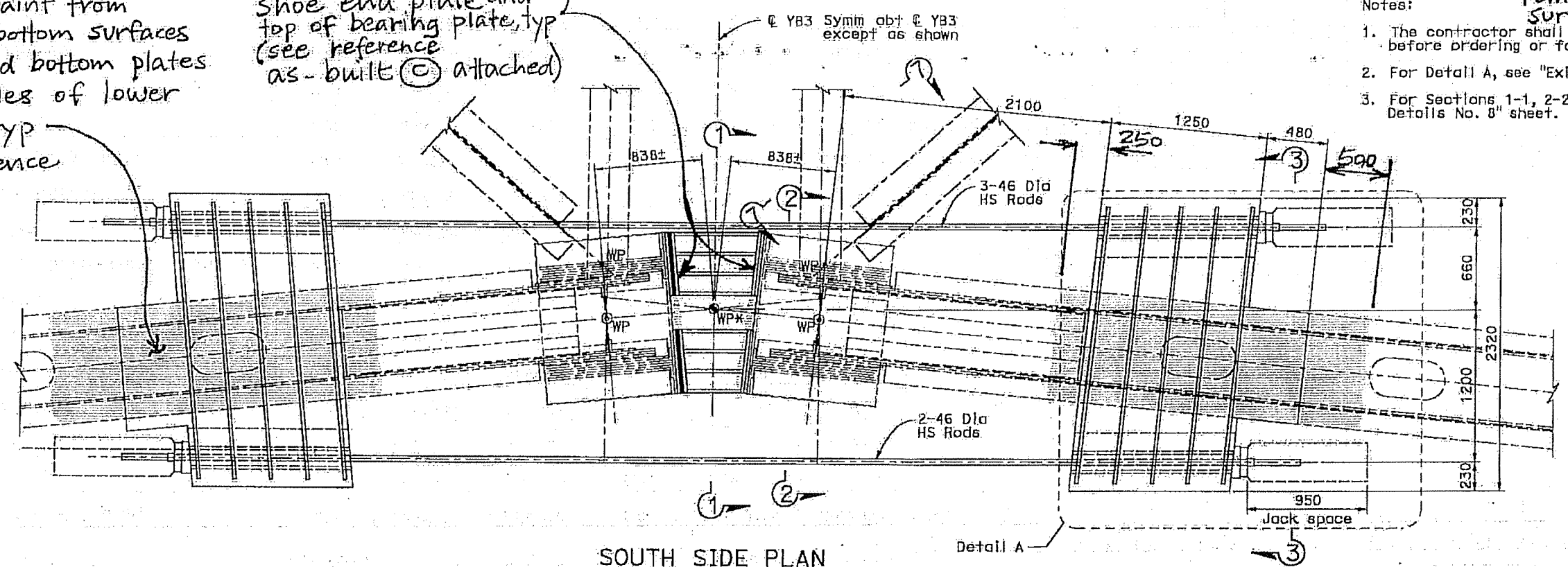

SOUTH SIDE PLAN
1:20

ALL DIMENSIONS ARE IN MILLIMETERS UNLESS OTHERWISE SHOWN

SAN FRANCISCO OAKLAND BAY BRIDGE
EAST SPAN SEISMIC SAFETY PROJECT

EAST TIE-IN

EXIST TRUSS DETAILS NO. ~~8~~ 18

DESIGN OVERSIGHT	DESIGN	BY	CHECKED	PREPARED FOR THE STATE OF CALIFORNIA DEPARTMENT OF TRANSPORTATION	PROJECT MANAGER	BRIDGE NO. 34-0006 (TEMP)	SHEET ~~127~~ 131H	OF 214
SIGN OFF DATE	DETAILS	BY	CHECKED			KILOMETER POST 12.6		
	QUANTITIES	BY	CHECKED					

DESIGN DETAIL SHEET (METRIC) (REV. 3/1/98)
DATE *TIME* Pen Table File

ORIGINAL SCALE IN MILLIMETERS FOR REDUCED PLANS 0 10 20 30 40 50 60 70 80 90 100

CU
EA 0120R4

DISREGARD PRINTS BEARING EARLIER REVISION DATES 11/05/07

REVISION DATES (PRELIMINARY STAGE ONLY)

FILE => p:\BB\04-012001\ETI\Dgn\aletd06.dgn

100% PS&E

FILE => p:\BB\04-012001\ETI\Dgn\aletd06.dgn TIME PLOTTED => 3:05:16 PM DATE PLOTTED => 8/20/2008 USERNAME => pzhao

DIST.	COUNTY	ROUTE	POST MILES TOTAL PROJECT	SHEET NO.	TOTAL SHEETS
04	SF, Ala	80	7.8/8.9, 0.0/1.1	82	205

REGISTERED ENGINEER - CIVIL
October 21, 1997

12-8-97
PLANS APPROVAL DATE

The State of California or its officers or agents shall not be responsible for the accuracy or completeness of electronic copies of this plan sheet.

NOTE:
THE CONTRACTOR SHALL VERIFY ALL CONTROLLING FIELD DIMENSIONS BEFORE ORDERING OR FABRICATING ANY MATERIAL.

NOTES:
1. For 'Section A-A' see 'Tie Rod Assembly Unit Details' sheet.
2. For 'Base Plate' and 'Kicker' details see 'Base Plate Details' sheet.
3. Location of Tie Rod may be field adjusted, per Engineer's approval, to clear adjacent rivets and perforation.
4. Laces are not shown for clarity.
5. For construction sequence see 'TIE ROD ASSEMBLY UNIT DETAILS' sheet.

Indicates limits of paint removal from existing steel surfaces.

LEGEND

- Indicates existing structures.
- Indicates new construction.
- Indicates new 1" ϕ high strength bolts.
- Indicates existing 1" ϕ rivets to be removed and replaced with new 1" ϕ high strength bolts.
- Indicates approx. location of existing rivets
- Indicates location of existing rivets where head of rivet is to be removed flush with face of the angle, rest of rivet to remain.

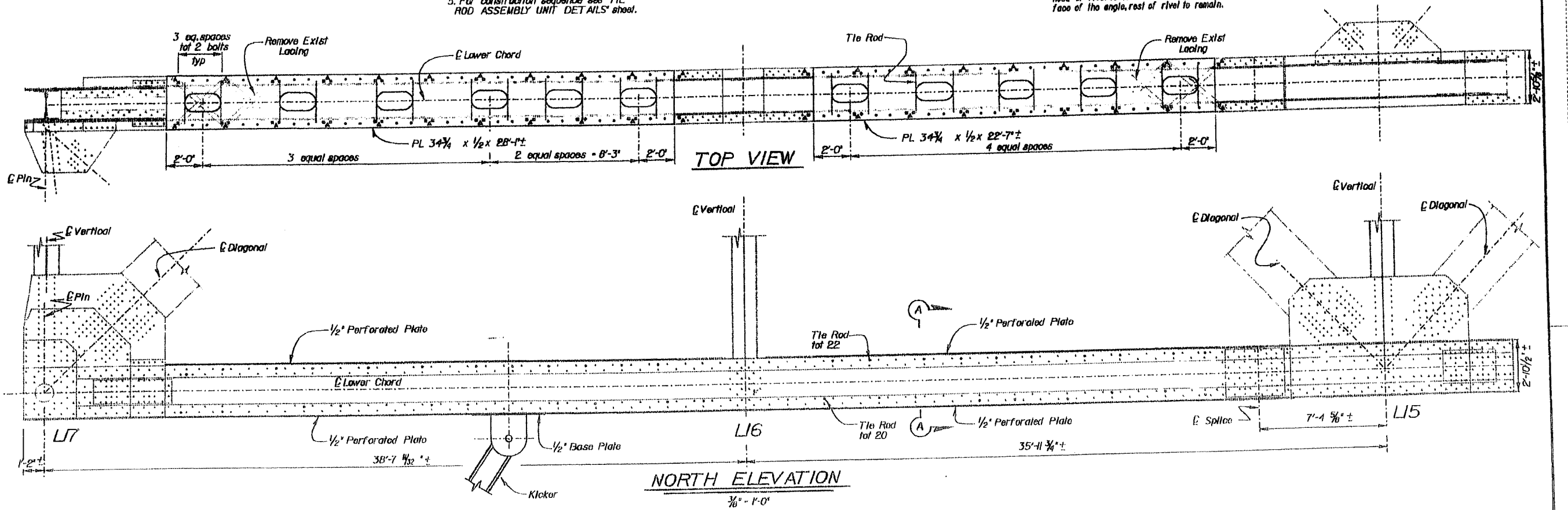

TOP VIEW

NORTH ELEVATION
3/8" = 1'-0"

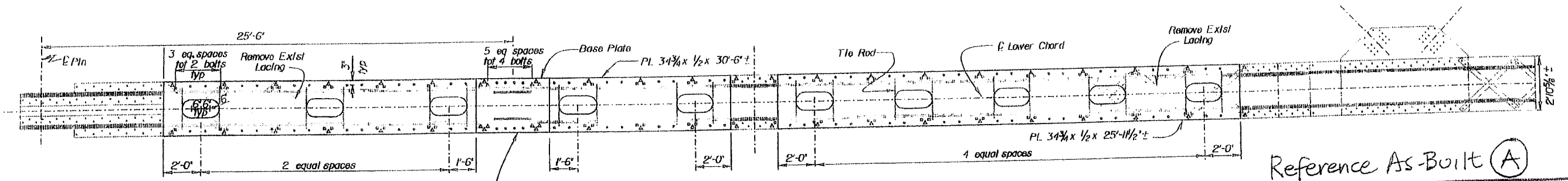

BOTTOM VIEW

Reference As-Built (A)

CONTRACT NO. 04-0120R4

CONTRACT CHANGE ORDER NO 172

SHEET 9 OF 11

DESIGN	BY Fadel Alameddine	CHECKED E. A. Morris
DETAILS	BY Janie Chiubna	CHECKED E. A. Morris
QUANTITIES	BY Fadel Alameddine	CHECKED E. A. Morris

ORIGINAL SCALE IN INCHES FOR REDUCED PLANS

STATE OF CALIFORNIA
DEPARTMENT OF TRANSPORTATION

DIVISION OF STRUCTURES
STRUCTURE DESIGN
TOLL BRIDGES SPECIAL ANALYSIS

CU 04
EA 043001

BRIDGE NO. 33-0025
POST MILE 1.5

DISREGARD PRINTS BEARING EARLIER REVISION DATES

USERNAME => trmikesi
bepir14dt1_09071154

INTERIM SEISMIC RETROFIT PROJECT
EAST BAY 288 TRUSSES YERBA BUENA ISLAND
SAN FRANCISCO-OAKLAND BAY BRIDGE
LOWER CHORD L15-L17

REVISION DATES (PRELIMINARY STAGE ONLY)

SHEET 14 OF 36

DATE PLOTTED => 9-Dec-1997
TIME PLOTTED => 07:29

DS 050 209 (CADD 9/95)

CONTRACT NO. 04-0120R4

CONTRACT CHANGE ORDER NO 172

SHEET 10 OF 11

NOTES:

For 'Section A-A' see 'Tie Rod Assembly Unit Details' sheet.

For 'Base Plate' and 'Kicker' details see 'Base Plate Details' sheet.

Location of Tie Rod may be field adjusted, per Engineer's approval, to clear adjacent rivets and perforation.

Laces are not shown for clarity.

For typical perforation dimensions see 'Lower Chord L15-L17' sheet.

For construction sequence see 'TIE ROD ASSEMBLY UNIT DETAILS' sheet.

Indicates limits of paint removal from existing steel surfaces.

LEGEND

- Indicates existing structures.
- Indicates new construction.
- Indicates new 1" ϕ high strength bolts.
- Indicates existing 1" ϕ rivets to be removed and replaced with new 1" ϕ high strength bolts.
- Indicates approx. location of existing rivets
- Indicates location of existing rivets where head of rivet is to be removed flush with face of the angle, rest of rivet to remain.

DIST.	COUNTY	ROUTE	POST MILES TOTAL PROJECT	SHEET NO.	TOTAL SHEETS
04	SF, Ala	80	7.8/8.9, 0.0/1.1	83	205

REGISTERED ENGINEER - CIVIL
October 21, 1997

REGISTERED PROFESSIONAL ENGINEER
DER-FU DONALD LEE
No. 50978
Exp. 9-30-01
CIVIL
STATE OF CALIFORNIA

12-8-97
PLANS APPROVAL DATE

The State of California or its officers or agents shall not be responsible for the accuracy or completeness of electronic copies of this plan sheet.

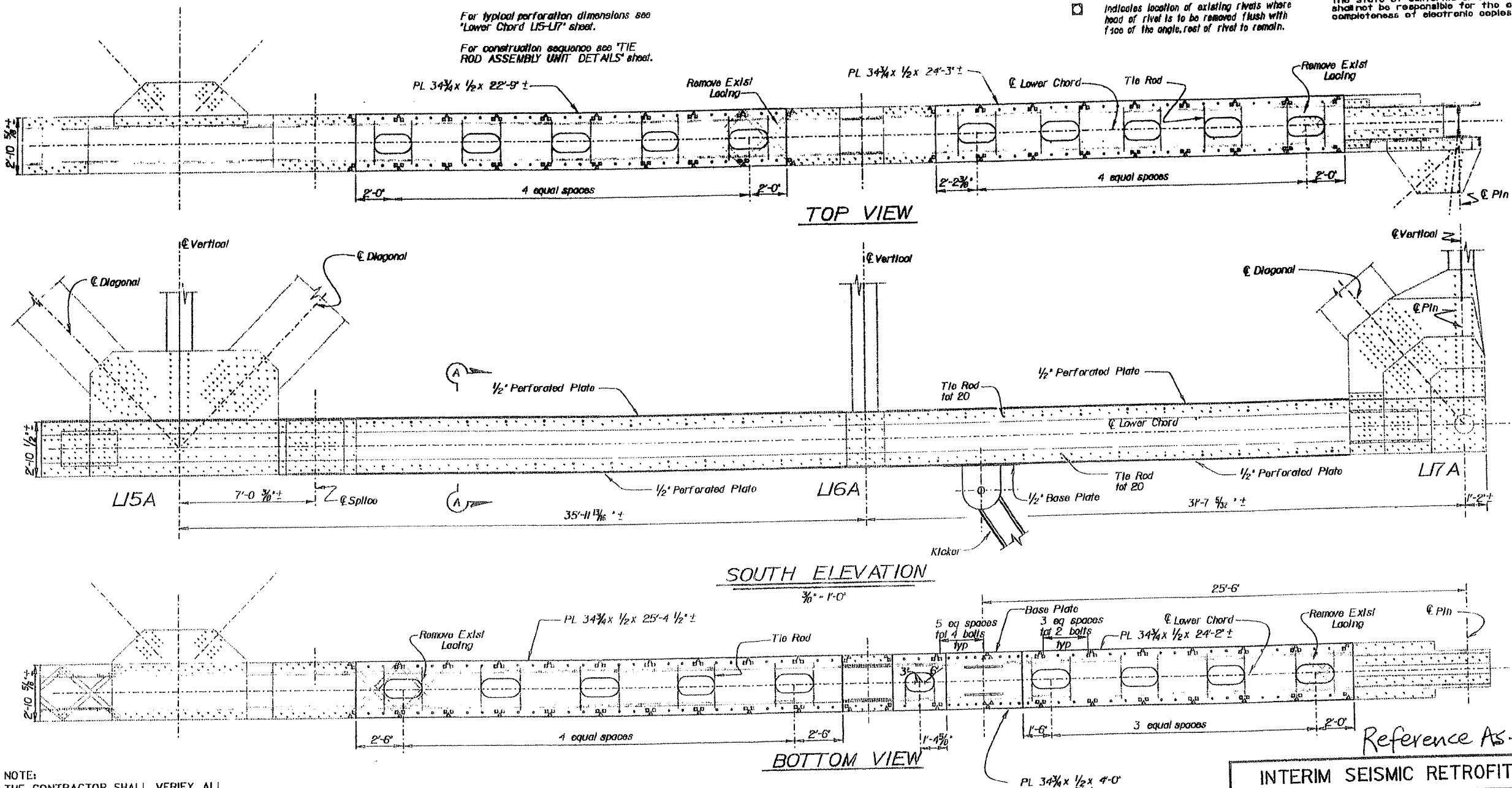

Reference As-Built (B)

NOTE:
THE CONTRACTOR SHALL VERIFY ALL CONTROLLING FIELD DIMENSIONS BEFORE ORDERING OR FABRICATING ANY MATERIAL.

INTERIM SEISMIC RETROFIT PROJECT

EAST BAY 288 TRUSSES YERBA BUENA ISLAND

SAN FRANCISCO-OAKLAND BAY BRIDGE

LOWER CHORD L15A-L17A

DESIGN	BY Fadel Alameddine	CHECKED E. A. Morris
DETAILS	BY Janie Chiubna	CHECKED E. A. Morris
QUANTITIES	BY Fadel Alameddine	CHECKED E. A. Morris

STATE OF CALIFORNIA
DEPARTMENT OF TRANSPORTATION

DIVISION OF STRUCTURES
STRUCTURE DESIGN
TOLL BRIDGES SPECIAL ANALYSIS

BRIDGE NO. 33-0025
POST MILE 1.5

CU 04
EA 043001

DISREGARD PRINTS BEARING EARLIER REVISION DATES

REVISION DATES (PRELIMINARY STAGE ONLY)

SHEET 15 OF 36

ORIGINAL SCALE IN INCHES FOR REDUCED PLANS 0 1 2 3

USERNAME => trmikesi
bepir15dt2_09071224

DATE PLOTTED => 9-Dec-1997
TIME PLOTTED => 07:32

BS 050 8/39 (CADD 9/95)

Contract No 04-0120R4
Contract Change Order No. 172
Sheet 11 of 11

30-1

REGISTERED PROFESSIONAL ENGINEER
MICHAEL E. WHITESIDE
No. C047977
Exp. 12.31.09
CIVIL
STATE OF CALIFORNIA

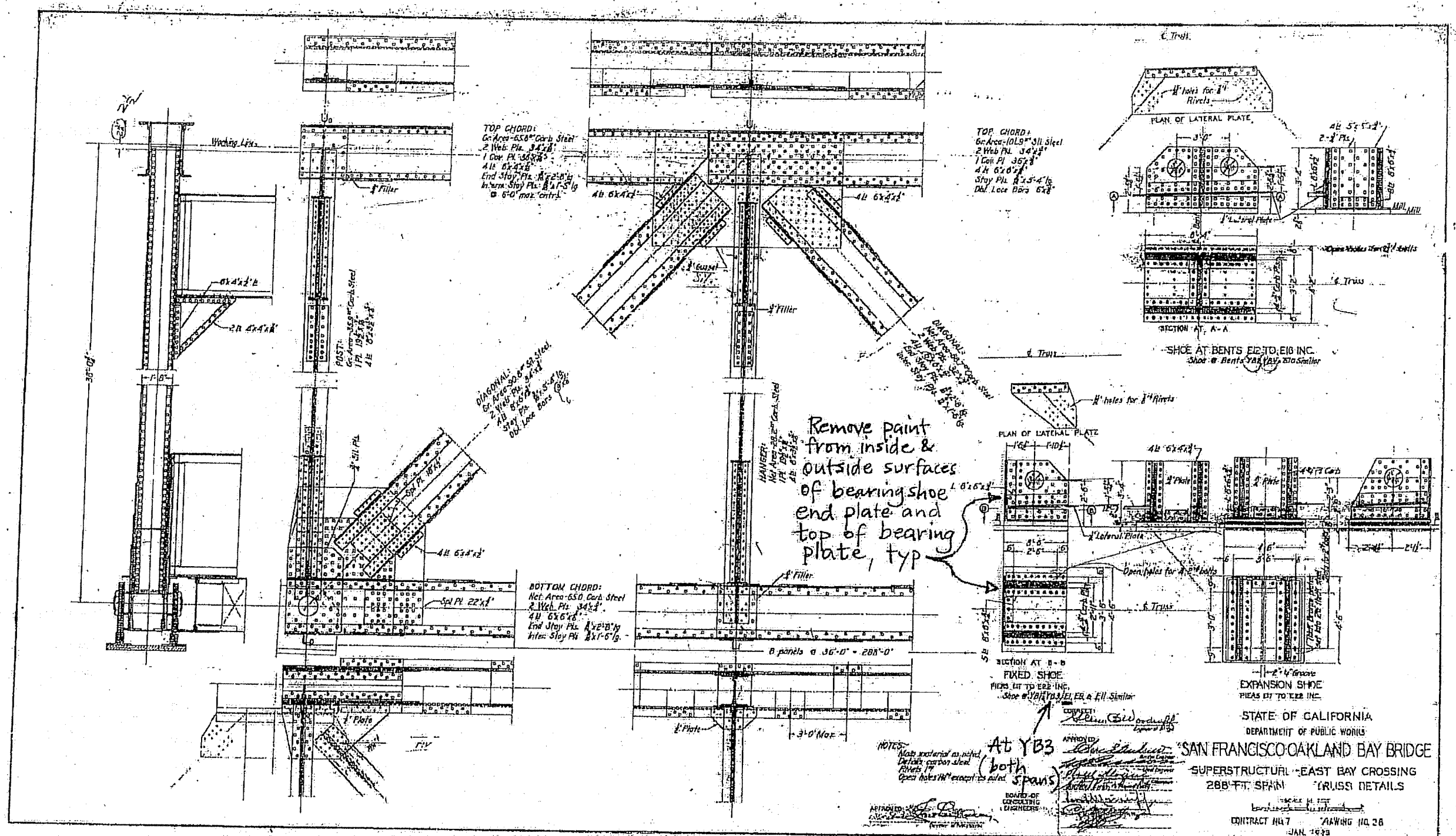

Reference As-Built (C)

CONTRACT CHANGE ORDER

Change Requested by: Engineer

CCO: 173	Suppl. No. 0	Contract No. 04 - 0120R4	Road SF-80-12.6/13.2	FED. AID LOC.:

To: CC MYERS INC

You are directed to make the following changes from the plans and specifications or do the following described work not included in the plans and specifications for this contract. ***NOTE: This change order is not effective until approved by the Engineer.***

Description of work to be done, estimate of quantities and prices to be paid. (Segregate between additional work at contract price, agreed price and force account.) Unless otherwise stated, rates for rental of equipment cover only such time as equipment is actually used and no allowance will be made for idle time. This last percentage shown is the net accumulated increase or decrease from the original quantity in the Engineer's Estimate.

Adjustment of Compensation at Lump Sum:

In accordance with Section 4-1.03 "Changes" of the contract Standard Specifications, provide compensation for additional costs incurred by the Contractor on the 3 items of work listed below due to all Department delays to the work of the Viaduct portion of the Temporary Bypass Structure (Bridge No. 34-0006 (TEMP)):

1)Construction of the Viaduct concrete footings, columns, decks and barrier rails.

2)Providing stairway and elevator access to the Viaduct during the work.

3)Providing all design support during the construction of the Viaduct.

For this work, the Contractor will be compensated a lump sum of $740,890.00. This sum constitutes full and final compensation for all outstanding escalation costs incurred on the Viaduct structure due to all Department delays to the work.

Cost of Adjustment of Compensation at Lump Sum $740,890.00

Estimated Cost: Increase ☑ Decrease ☐ **$740,890.00**

By reason of this order the time of completion will be adjusted as follows: 0 days

Submitted by

Signature	Resident Engineer	Date
for Leonnie Balderrama	JEANNIE BALDERRAMOS	3-23-10

Approval Recommended by

Signature	Area Construction Manager	Date
Deanna Vilcheck	DEANNA VILCHECK	3/30/10

Engineer Approval by

Signature	Area Construction Manager	Date
Deanna Vilcheck	DEANNA VILCHECK	3/4/10

We the undersigned contractor, have given careful consideration to the change proposed and agree, if this proposal is approved, that we will provide all equipment, furnish the materials, except as may otherwise be noted above, and perform all services necessary for the work above specified, and will accept as full payment therefor the prices shown above.

NOTE: If you, the contractor, do not sign acceptance of this order, your attention is directed to the requirements of the specifications as to proceeding with the ordered work and filing a written protest within the time therein specified.

Contractor Acceptance by

Signature	(Print name and title)	Date
D E Hanick	Daniel E. Hanick, President	4/21/10

STATE OF CALIFORNIA - DEPARTMENT OF TRANSPORTATION

CONTRACT CHANGE ORDER MEMORANDUM

TO: MIKE FORNER / DEANNA VILCHECK	FILE: E.A. 04 - 0120R4 CO-RTE-PM SF-80-12.6/13.2 FED. NO.
FROM: JEANNIE BALDERRAMOS	
CCO#: 173 SUPPLEMENT#: 0 Category Code: CHXX	CONTINGENCY BALANCE (incl. this change) $37,298,674.59
COST: $740,890.00 INCREASE ☑ DECREASE ☐	HEADQUARTERS APPROVAL REQUIRED? ☑ YES ☐ NO
SUPPLEMENTAL FUNDS PROVIDED: $0.00	IS THIS REQUEST IN ACCORDANCE WITH ENVIRONMENTAL DOCUMENTS? ☑ YES ☐ NO
CCO DESCRIPTION: Viaduct Concrete Escalation	PROJECT DESCRIPTION: CONSTRUCT ROUTE 80 TEMP BYPASS STRUCTURE

Original Contract Time:	Time Adj. This Change:	Previously Approved CCO Time Adjustments:	Percentage Time Adjusted: (including this change)	Total # of Unreconciled Deferred Time CCO(s): (including this change)
475 Day(s)	0 Day(s)	1660 Day(s)	349 %	0

THIS CHANGE ORDER PROVIDES FOR:

Compensation to the contractor for escalation costs associated with the construction of the concrete columns, decks and railing and for providing marine and worksite access to the Viaduct structure due to Department delays to the work.

This contract calls for the construction of a temporary detour for both eastbound and westbound I-80 traffic that allows for the tie in of the east span of the new San Francisco Oakland Bay Bridge (SFOBB) to Yerba Buena Island. The detour consist of three main structures, the east tie-in (ETI) to the bridge, the west tie-in (WTI) to the island and the Viaduct structure between the two. The contract was awarded as a performance based project with the contractor responsible for meeting the design criteria specified in the contract.

The Viaduct consists of 4 spans of a double deck steel truss approximately 20 meters wide and 320 meters long with a weight of over 4,300 metric tons. Due to extensive Department ordered changes and delays to the project, the contract completion date has been extended by approximately 4 and a half years with the work on the Viaduct structure delayed between 2 to 4 years. Due to these delays, the contractor has incurred considerable escalation costs pertaining to the construction of the concrete columns, decks and railing and for providing marine and worksite access to the structure. This change order provides compensation for these additional costs.

The concrete work compensated under this change includes the construction 8 column each 3 meters in diameter and approximately 50 meters tall, 8 concrete decks approximately 80 meters by 20 meters in area and approximately 650 meters of concrete barrier. Stair towers and elevators were required to provide access up to the deck. Compensation provided under this change order is based on an as-planned verses actual costs analysis for the affected concrete work.

Compensation is also included for the escalation costs pertaining to the contractor design support of the construction of the Viaduct. As the design of the Viaduct was a performance based design, the contractor provided design support during construction to provide quality control and to resolve design conflicts encountered in the field. The original contract provided a separate contract bid item for the design of the detour structure.

Compensation shall be paid as an adjustment of compensation at an agreed lump sum of $740,890.00 which shall be financed from the contract's contingency funds. A cost estimate is on file.

No adjustment of contract time is warranted as this change will not affect the controlling operation.

This change was concurred with by Ken Terpstra - Project Manager, and Jaime Gutierrez - Project Engineer.

Maintenance concurrence is not required as this is an administrative change and doesn't affect any permanent roadway features.

ADA Notice: For individuals with sensory disabilities, this document is available in alternate formats. For information call: (916) 654-6410 or TDD (916) 654-3880 or write Records and Forms Management, 1120 N Street, MS-89, Sacramento, CA 95814.

CONCURRED BY:			
Construction Engineer:	Jeannie Balderramos, RE	Date	5-4-10
Bridge Engineer:	Bill Casey, Bridge Engineer	Date	5/4/10
Project Engineer:		Date	
Project Manager:	Ken Terpstra, PM	Date	5/4/10
FHWA Rep.:		Date	
Environmental:		Date	
Other (specify):	Mohan Ayadurai, Struct. Rep.	Date	3/15/10
Other (specify):		Date	
District Prior Approval By:		Date	
HQ (Issue Approve) By:	Larry Salhaney, HQ CCO Engine	Date	4/6/10
Resident Engineer's Signature:	Jeannie Balderramos	Date	5-4-10

ESTIMATE OF COST	THIS REQUEST	TOTAL TO DATE
ITEMS	$0.00	$0.00
FORCE ACCOUNT	$0.00	$0.00
AGREED PRICE	$0.00	$0.00
ADJUSTMENT	$740,890.00	$740,890.00
TOTAL	$740,890.00	$740,890.00

FEDERAL PARTICIPATION

☐ PARTICIPATING ☐ PARTICIPATING IN PART ☑ NONE
☐ NON-PARTICIPATING (MAINTENANCE) ☐ NON-PARTICIPATING

FEDERAL SEGREGATION (if more than one Funding Source or P.I.P. type)
☐ CCO FUNDED PER CONTRACT ☐ CCO FUNDED AS FOLLOWS

FEDERAL FUNDING SOURCE PERCENT

ADA Notice: For individuals with sensory disabilities, this document is available in alternate formats. For information call: (916) 654-6410 or TDD (916) 654-3880 or write Records and Forms Management, 1120 N Street, MS-89, Sacramento, CA 95814.

STATE OF CALIFORNIA - DEPARTMENT OF TRANSPORTATION

CONTRACT CHANGE ORDER

Change Requested by: Engineer

CCO 174	Suppl. No. 0	Contract No. 04 - 0120R4	Road SF-80-12.6/13.2	FED. AID LOC.: ACBRIM-080-1(097)N

To: CC MYERS INC

You are directed to make the following changes from the plans and specifications or do the following described work not included in the plans and specifications for this contract. ***NOTE: This change order is not effective until approved by the Engineer.***

Description of work to be done, estimate of quantities and prices to be paid. (Segregate between additional work at contract price, agreed price and force account.) Unless otherwise stated, rates for rental of equipment cover only such time as equipment is actually used and no allowance will be made for idle time. This last percentage shown is the net accumulated increase or decrease from the original quantity in the Engineer's Estimate.

Extra Work at Force Account:

Furnish, fabricate, coat and deliver four (4) expansion joints barrier plates for Bent 52A and four (4) expansion joint Barrier plates for Pier E1 as shown on Sheets 2 through 14 of this change. Payment for this work shall be made in accordance with Sections 4-1.03D, Extra Work, and 9-1.03, Force Account Payment, of the Standards Specifications.

Consideration of a time adjustment will be deferred until completion of the work specified herein. Determination of a commensurate time extension will be made in accordance with Section 8-1.07, "Liquidated Damages", of the Standard Specifications and Section 10-1.20 "Time Related Overhead (TRO)" of the Special Provisions.

Compensation for delays resulting from this work will be made in accordance with Section 8-1.09 "Right of Way Delays" of the Standard Specifications and Section 10-1.20 "Time Related Overhead" of the Special Provisions.

Estimated Cost of Extra Work at Force Account $350,000.00

Estimated Cost: **Increase** ☑ **Decrease** ☐ **$350,000.00**

By **reason of this order the time of completion will be adjusted as follows:** Deferred

Submitted by

Signature	Resident Engineer	Date
	BILL CASEY	5-7-09

Approval Recommended by

Signature	Area Construction Manager	Date
Deanna Vilcheck	DEANNA VILCHECK	5/8/09

Engineer Approval by

Signature	Area Construction Manager	Date
Deanna Vilcheck	DEANNA VILCHECK	6/1/09

We the undersigned contractor, have given careful consideration to the change proposed and agree, if this proposal is approved, that we will provide all equipment, furnish the materials, except as may otherwise be noted above, and perform all services necessary for the work above specified, and will accept as full payment therefor the prices shown above.

NOTE: If you, the contractor, do not sign acceptance of this order, your attention is directed to the requirements of the specifications as to proceeding with the ordered work and filing a written protest within the time therein specified.

Contractor Acceptance by

Signature	(Print name and title)	Date
	DANIEL E. Hunick, PRESIDENT	5/22/09

CONTRACT NO 04-0120R4

CONTRACT CHANGE ORDER NO 174

SHEET 5 OF 14

LEGEND:

Indicates steel deck plate V-grooves at ±45°

Indicates existing structure

NOTE

1. The contractor shall verify all controlling field dimensions before ordering or fabricating any material.
2. For Sections A-A and B-B, see "Pier E1 Expansion Joint Detail" Sht. 1 and "Pier E1 Expansion Joint Detail" Sht. 2, respectively.
3. For barrier expansion joint and cover plate details, see "Pier E1 Expansion Joint Barrier" sheets.

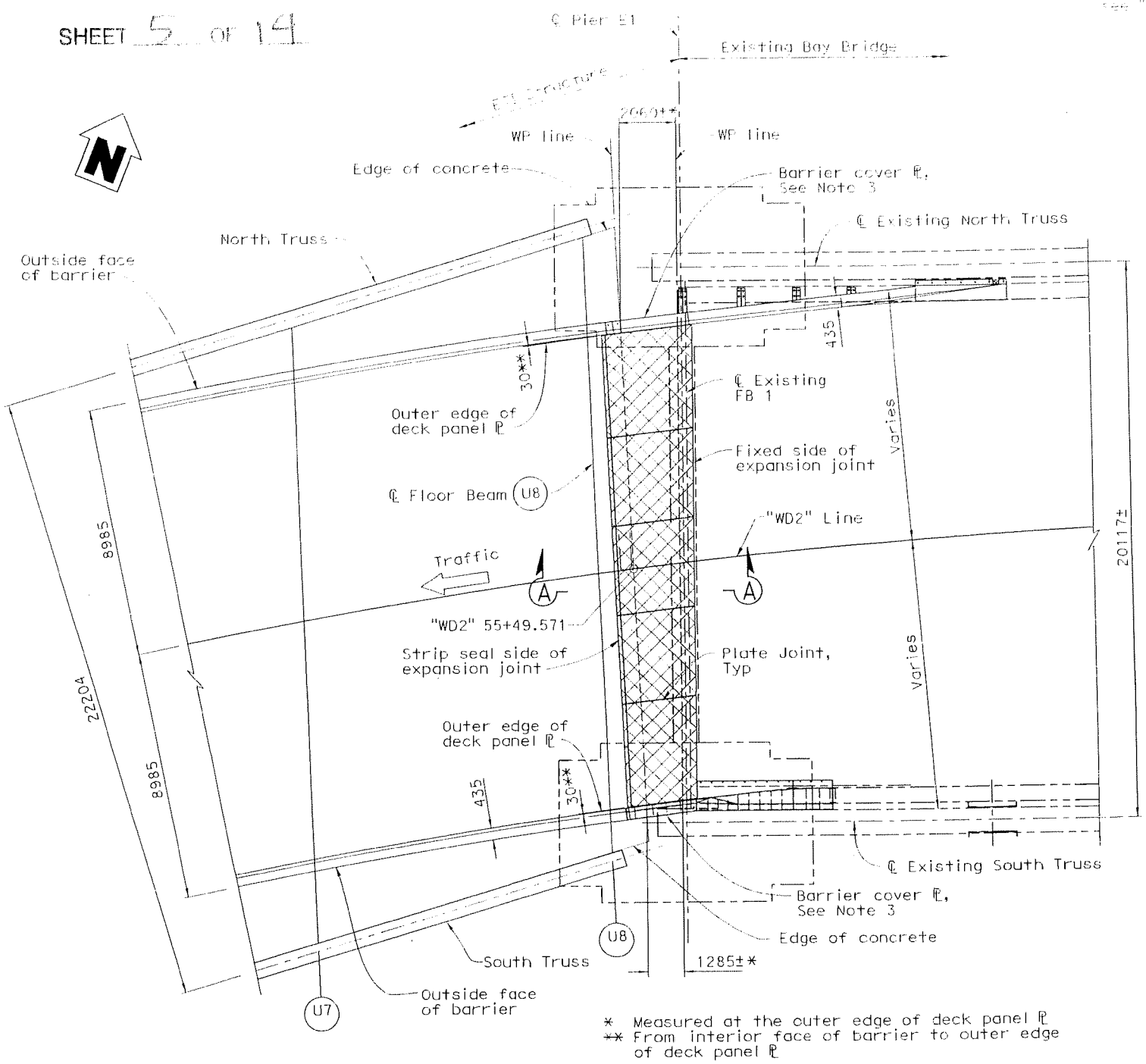

* Measured at the outer edge of deck panel ℄
** From interior face of barrier to outer edge of deck panel ℄

PLAN EXPANSION JOINT UPPER DECK

1:100

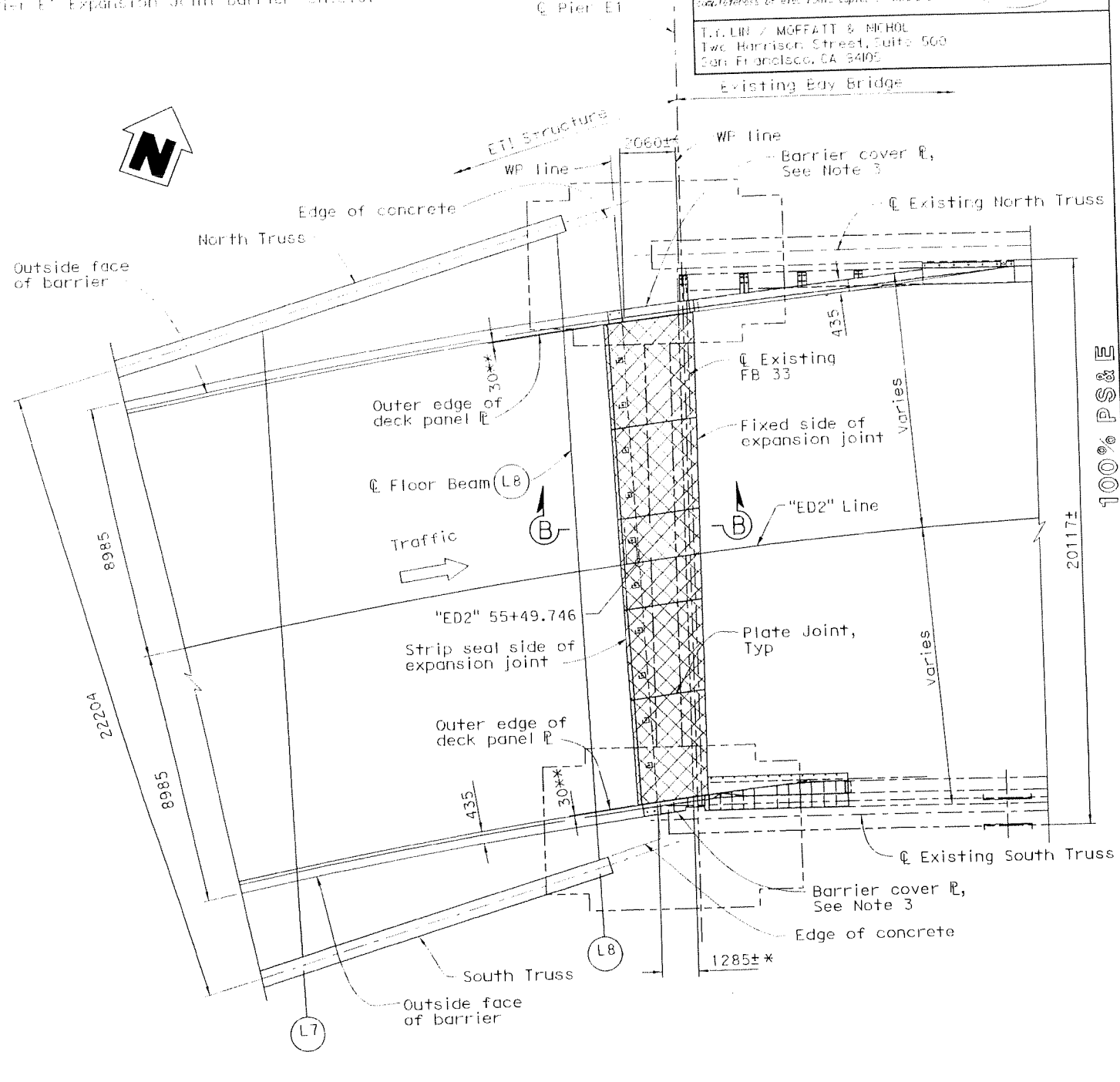

PLAN EXPANSION JOINT LOWER DECK

1:100

ALL DIMENSIONS ARE IN MILLIMETERS UNLESS OTHERWISE SHOWN

SAN FRANCISCO OAKLAND BAY BRIDGE
EAST SPAN SEISMIC SAFETY PROJECT

EAST TIE-IN

PIER E1 EXPANSION JOINT LAYOUT

T. Ostrom/M. Whiteside/A. Akinsanya
DESIGN OVERSIGHT

SIGN OFF DATE

DESIGN	BY C. Redfield, R. Nutt	CHECKED S. Cheng	
DETAILS	BY S. Lee, P. Zhao	CHECKED A. Lee	
QUANTITIES	BY H. Nelson	CHECKED A. Lee	

PREPARED FOR THE STATE OF CALIFORNIA DEPARTMENT OF TRANSPORTATION

M. Sah
PROJECT ENGINEER
S. Abbas
PROJECT MANAGER

BRIDGE NO. 34-0006 (TEMP)
KILOMETER POST 12.6

CU
EA 0120R4

DISREGARD PRINTS BEARING EARLIER REVISION DATES

REVISION DATES (PRELIMINARY STAGE ONLY): 11/05/07 4/04/08 5/12/08

SHEET 99 OF 214

DESIGN DETAIL SHEET (METRIC) (REV. 3/1/98)
#DATE# #TIME# Pen Table File

ORIGINAL SCALE IN MILLIMETERS FOR REDUCED PLANS 0 10 20 30 40 50 60 70 80 90 100

FILE => p:\bb\04-012001\efi\dgn\akpej101.dgn

TIME PLOTTED => 3:51:51 PM
DATE PLOTTED => 5/9/2008
USERNAME => algo
100% PS&E

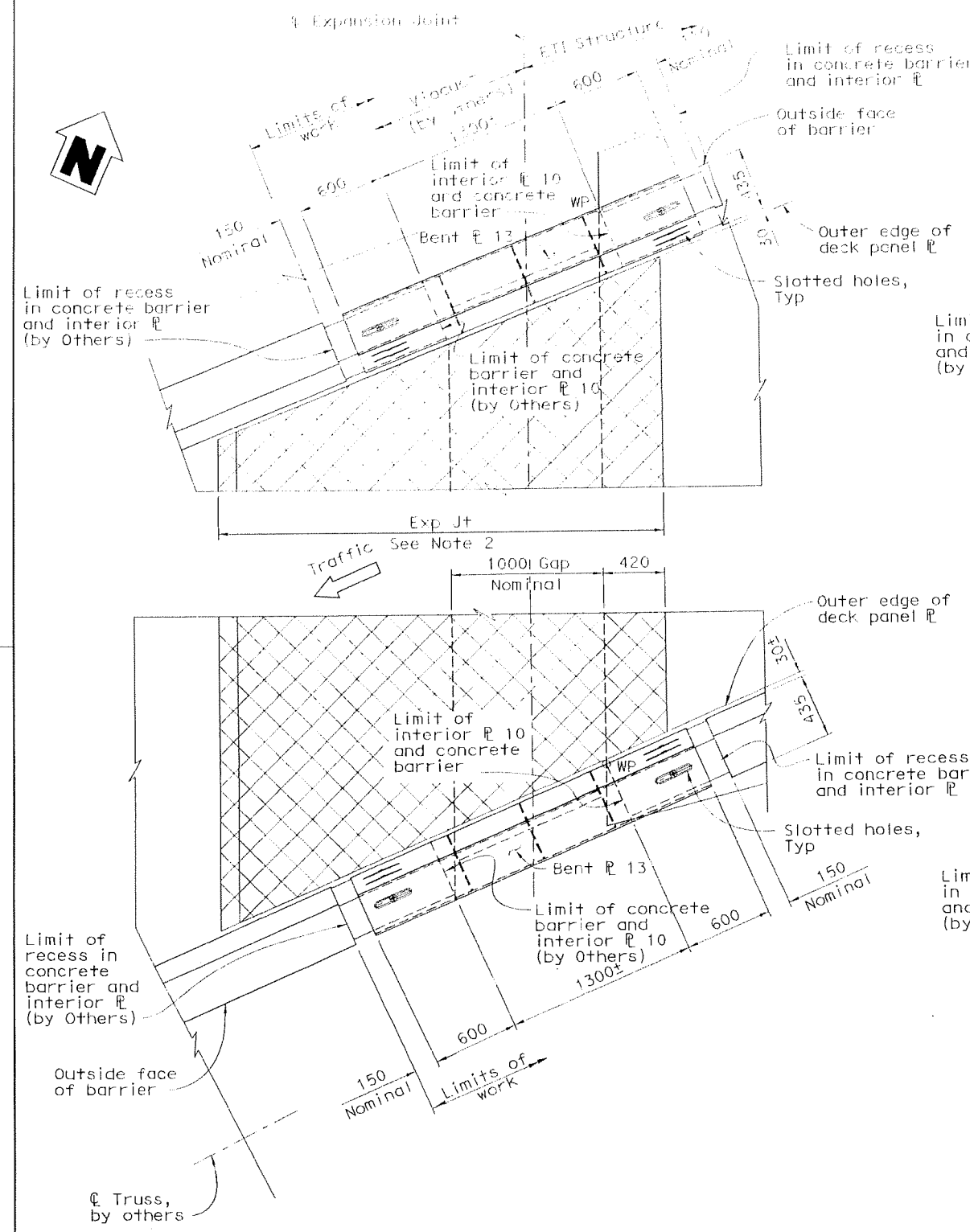

PLAN - BARRIER PLATES - UPPER DECK

1:20

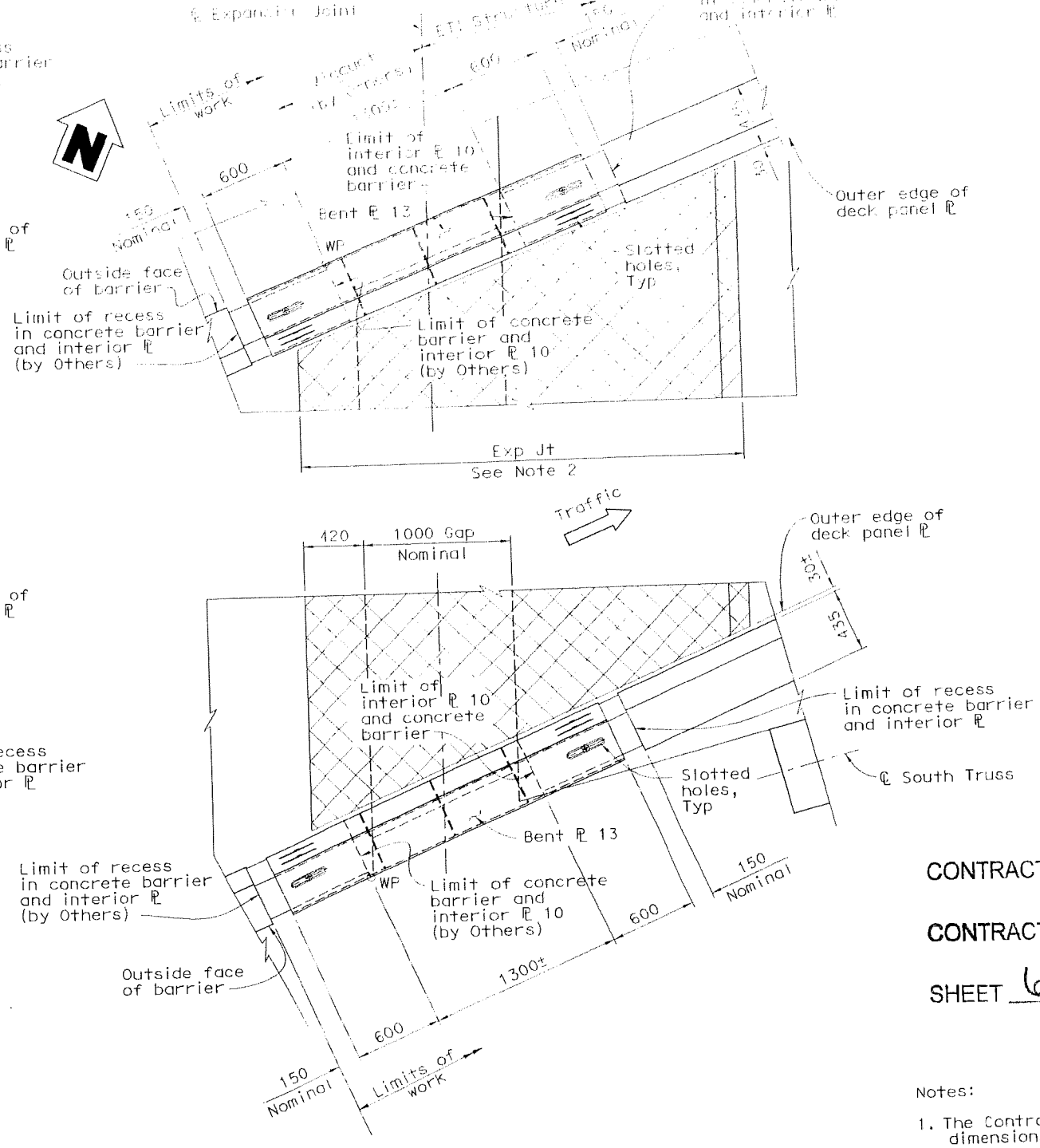

PLAN - BARRIER PLATES - LOWER DECK

1:20

CONTRACT NO. 04-0120R4

CONTRACT CHANGE ORDER NO 174

SHEET 6 OF 14

Notes:

1. The Contractor shall verify all controlling field dimensions before ordering or fabricating any material.
2. For Expansion Joint details, see "Bent 52A Expansion Joint Details" sheets.

ALL DIMENSIONS ARE IN MILLIMETERS UNLESS OTHERWISE SHOWN

SAN FRANCISCO OAKLAND BAY BRIDGE
EAST SPAN SEISMIC SAFETY PROJECT

EAST TIE-IN

BENT 52A EXPANSION JOINT BARRIER NO. 1

T. Ostrom/M. Whiteside/A. Akinsanya
DESIGN OVERSIGHT

SIGN OFF DATE

	BY	CHECKED
DESIGN	C. Redfield, R. Nutt	S. Cheng
DETAILS	S. Lee, P. Zhao	A. Lee
QUANTITIES	H. Nelson	A. Lee

PREPARED FOR THE STATE OF CALIFORNIA
DEPARTMENT OF TRANSPORTATION

M. Sah
PROJECT ENGINEER
S. Abbas
PROJECT MANAGER
CU
EA 0120R4

BRIDGE NO. 34-0006 (TEMP)
KILOMETER POST 12.6

DISREGARD PRINTS BEARING EARLIER REVISION DATES →

REVISION DATES (PRELIMINARY STAGE ONLY)

SHEET 97 OF 214

ORIGINAL SCALE IN MILLIMETERS FOR REDUCED PLANS 0 10 20 30 40 50 60 70 80 90 100

DESIGN DETAIL SHEET (METRIC) (REV. 3/1/98)
◆DATE◆ ◆TIME◆ Pen Table File

FILE => p:\bb\04-012001\efi\dgn\akbcjb01.dgn

Caltrans Metric

T.Y. LIN / MOFFATT & NICHOL
Two Harrison Street, Suite 500
San Francisco, CA 94105

100% PS&E

USERNAME => ALee
FILE =>
TIME PLOTTED => 9:58:42 AM
DATE PLOTTED => 5/12/2008

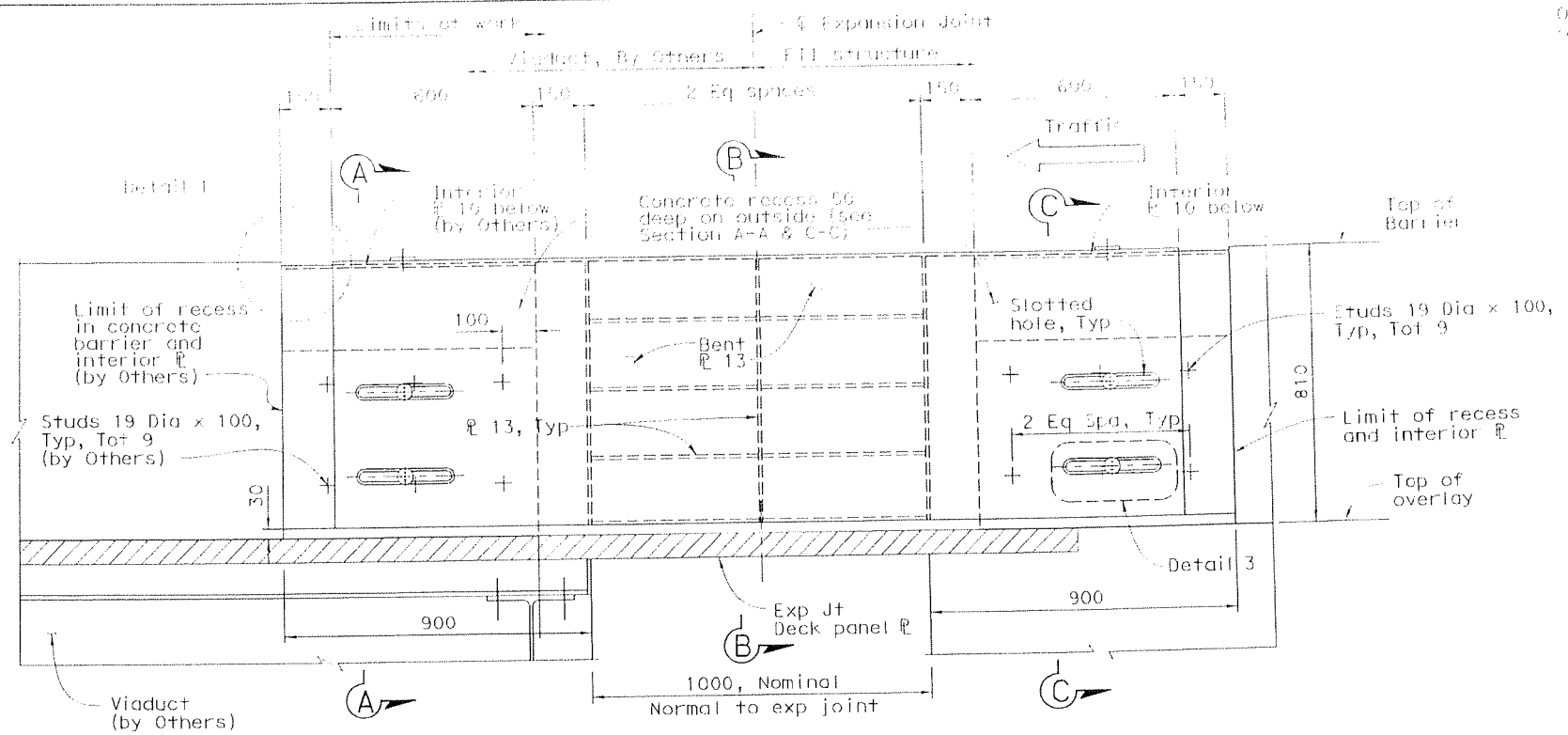

ELEVATION - UPPER DECK

1:10

Elevation shown for barrier on the upper deck left side. Other sides and levels similar

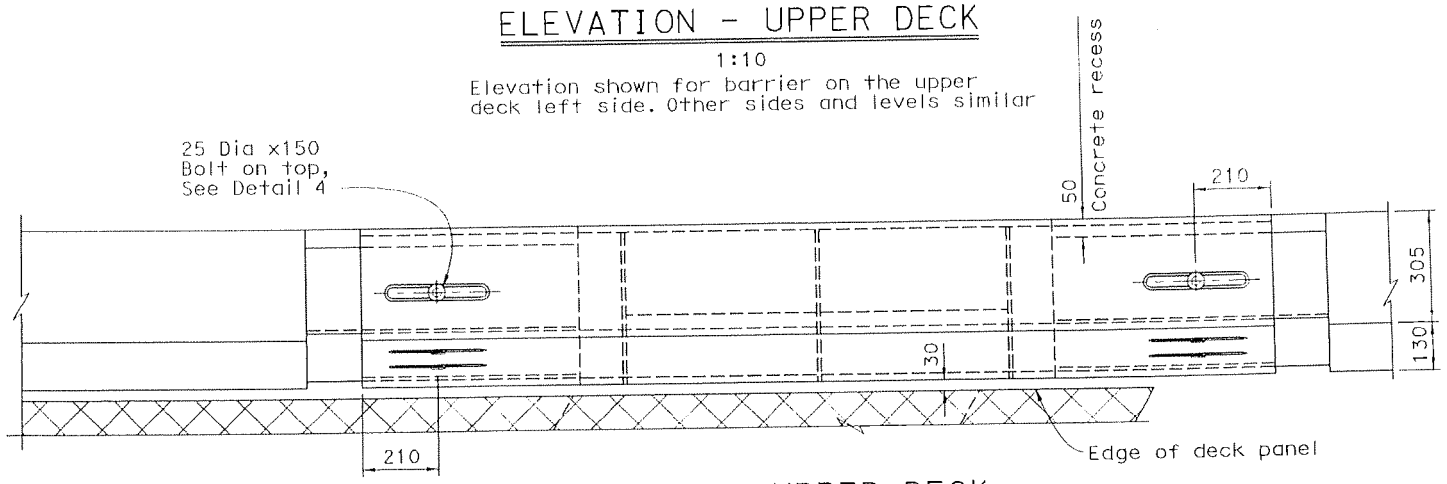

PLAN VIEW - UPPER DECK

1:10

Plan shown for barrier on the upper deck left side. Other sides and levels similar

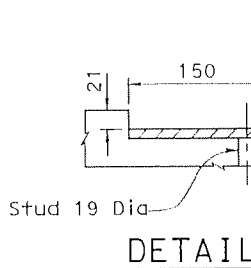

DETAIL 1

1:4

Upper Deck shown
Lower Deck similar

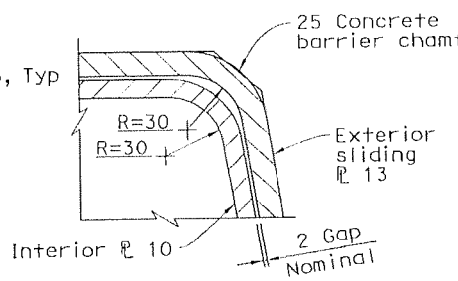

DETAIL 2

1:2

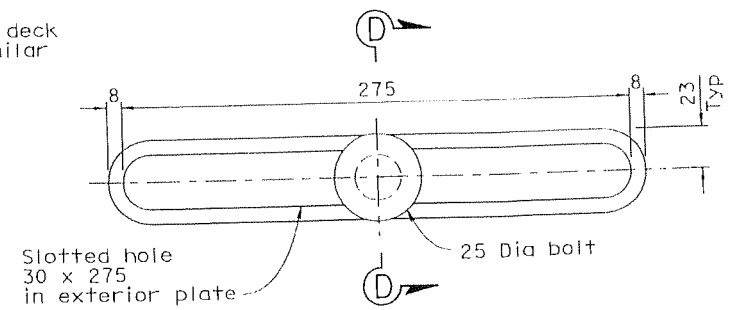

DETAIL 3

1:2

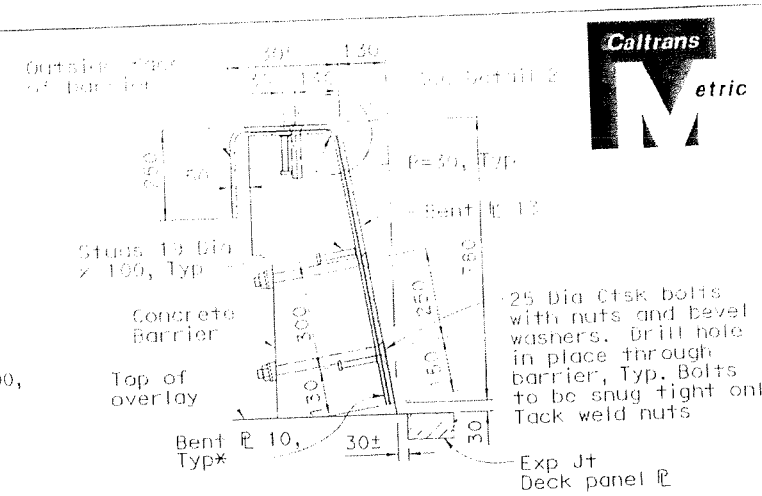

SECTION A-A

1:10

* Studs and interior ℄ by Others.

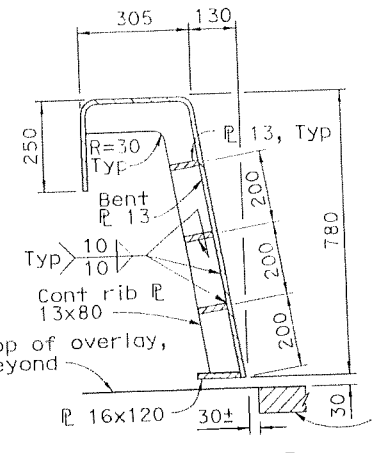

SECTION B-B

1:10

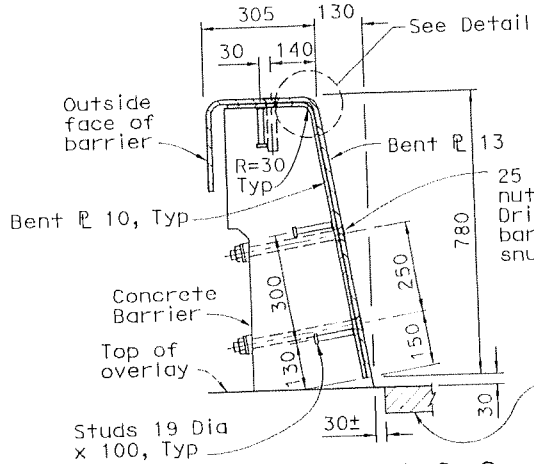

SECTION C-C

1:10

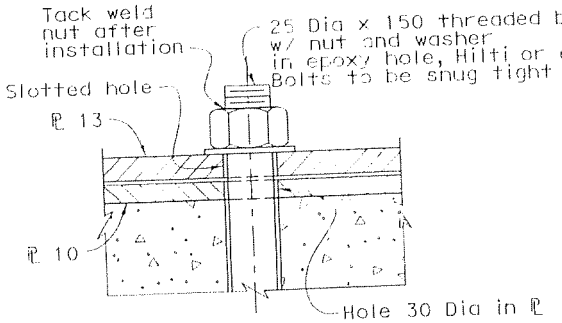

DETAIL 4

1:2

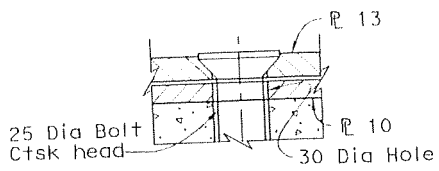

SECTION D-D

1:2

Notes:

1. The Contractor shall verify all controlling field dimensions before ordering or fabricating any material.
2. All bolts shall be A325, unless noted otherwise.

ALL DIMENSIONS ARE IN MILLIMETERS UNLESS OTHERWISE SHOWN

ORIGINAL SCALE IN MILLIMETERS FOR REDUCED PLANS 0 10 20 30 40 50 60 70 80 90 100

Caltrans Metric

REGISTERED PROFESSIONAL ENGINEER — CIVIL — STATE OF CALIFORNIA

The State of California or its officers or agents shall not be responsible for the accuracy or completeness of electronic copies of this plan sheet.

T.Y. LIN / MOFFATT & NICHOL
Two Harrison Street, Suite 500
San Francisco, CA 94105

CONTRACT NO. 04-0120R4

CONTRACT CHANGE ORDER NO 174

SHEET 7 OF 14

	BY	CHECKED
DESIGN	C. Redfield, R. Nutt	S. Cheng
DETAILS	S. Lee, P. Zhao	A. Lee
QUANTITIES	H. Nelson	A. Lee

PREPARED FOR THE STATE OF CALIFORNIA DEPARTMENT OF TRANSPORTATION

M. Sah, PROJECT ENGINEER
S. Abbas, PROJECT MANAGER
CU 04-0120R4

BRIDGE NO. 34-0006 (TEMP)
KILOMETER POST 12.6

DISREGARD PRINTS BEARING EARLIER REVISION DATES →

REVISION DATES (PRELIMINARY STAGE ONLY)									
11/05/01	4/02/04	5/12/06							

SAN FRANCISCO OAKLAND BAY BRIDGE
EAST SPAN SEISMIC SAFETY PROJECT

EAST TIE-IN

BENT 52A EXPANSION JOINT BARRIER NO. 2

SHEET 98 OF 214

T. Ostrom/M. Whiteside/A. Akinsanya
DESIGN OVERSIGHT

SIGN OFF DATE

DESIGN DETAIL SHEET (METRIC) (REV. 3/1/98)
DATE *TIME* Pen Table File

FILE => p:\bb\04-012001\efi\dgn\akbejb02.dgn

100% PS&E

FILE => p:\bb\04-012001\efi\dgn\akbejb02.dgn
TIME PLOTTED => 9:58:44 AM
DATE PLOTTED => 5/12/2006
USERNAME => Alee

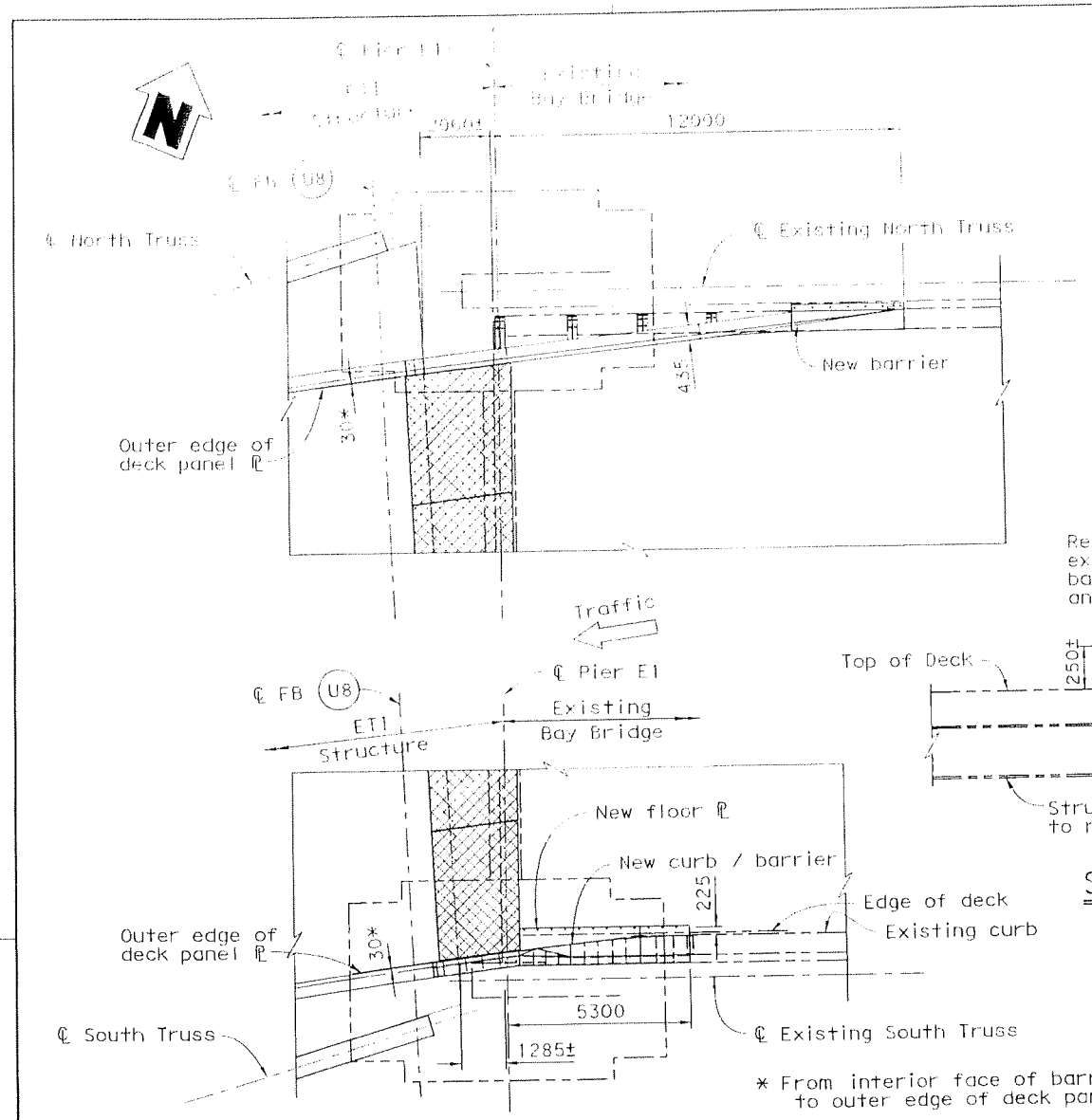

PLAN BARRIER PLATES - UPPER DECK

1:100

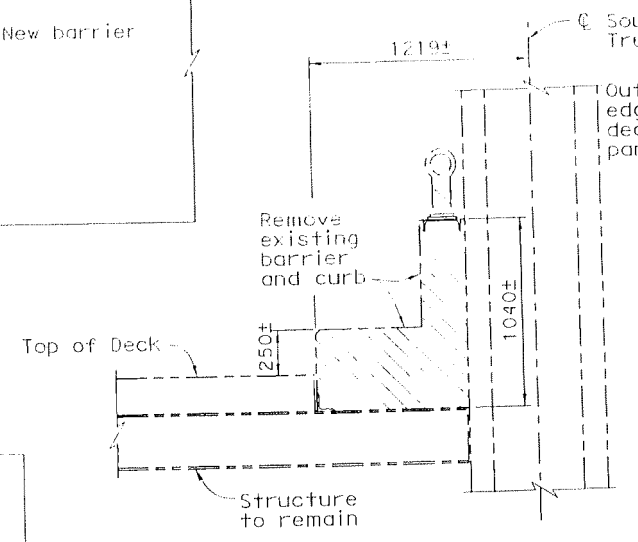

SECTION A-A

1:20

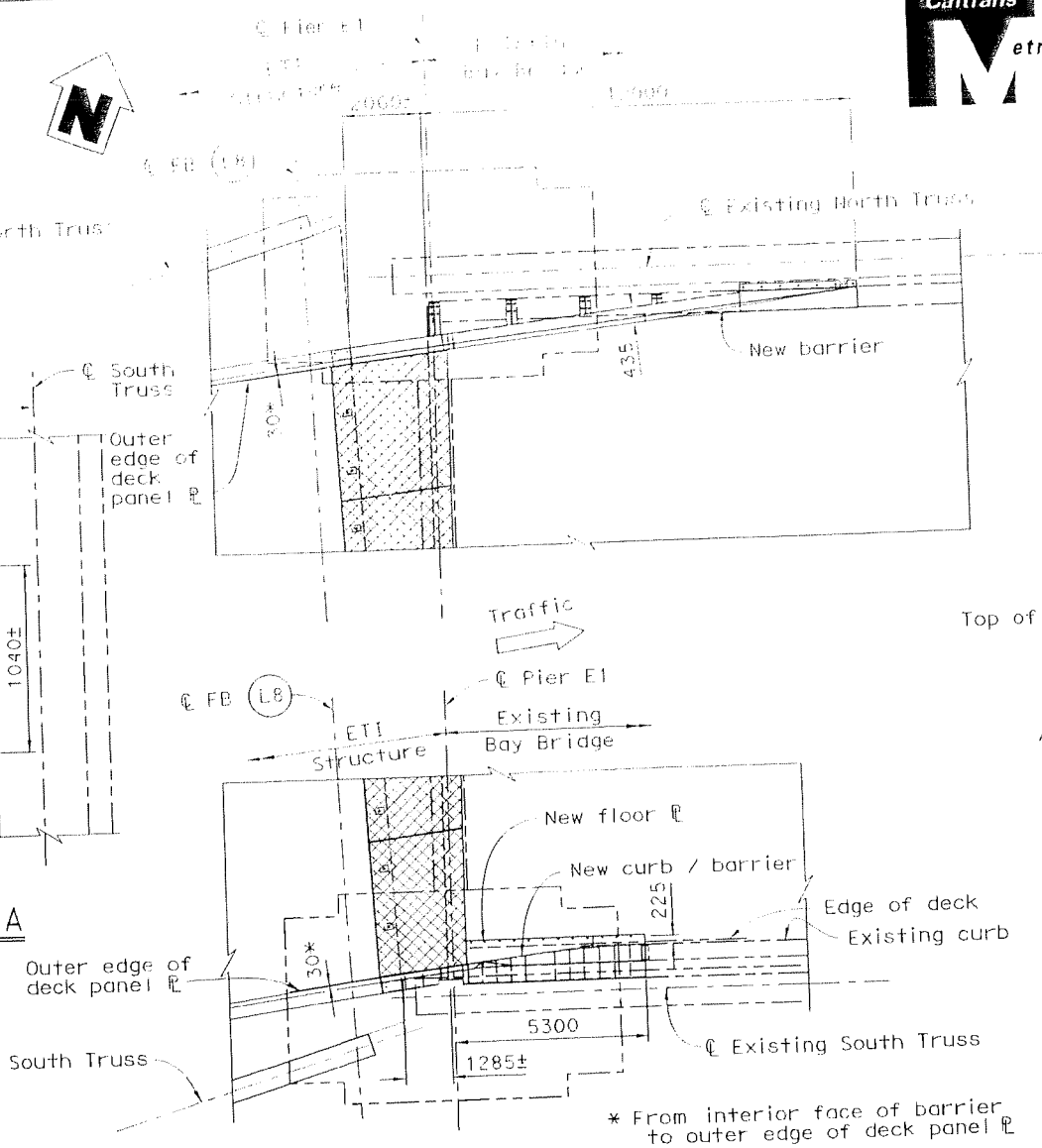

PLAN BARRIER PLATES - LOWER DECK

1:100

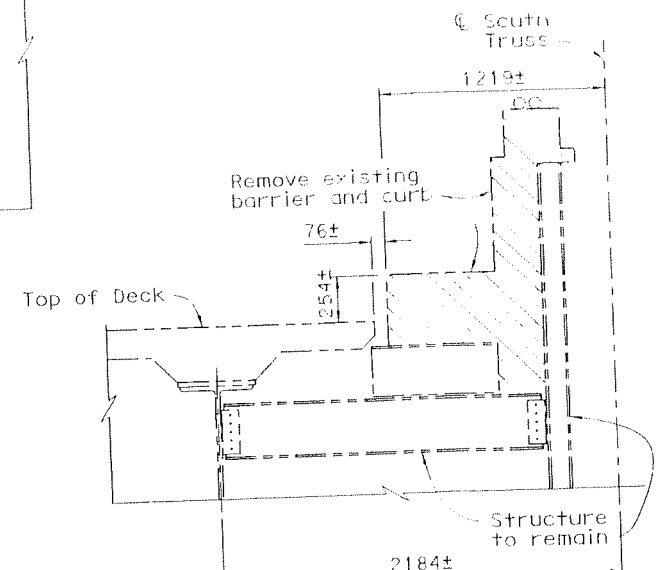

SECTION B-B

1:20

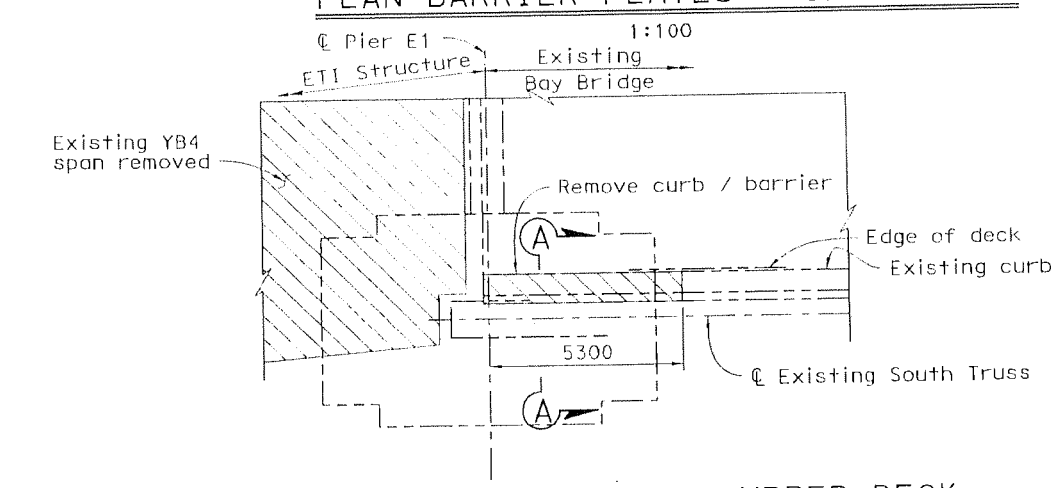

PLAN BARRIER REMOVAL - UPPER DECK

1:100

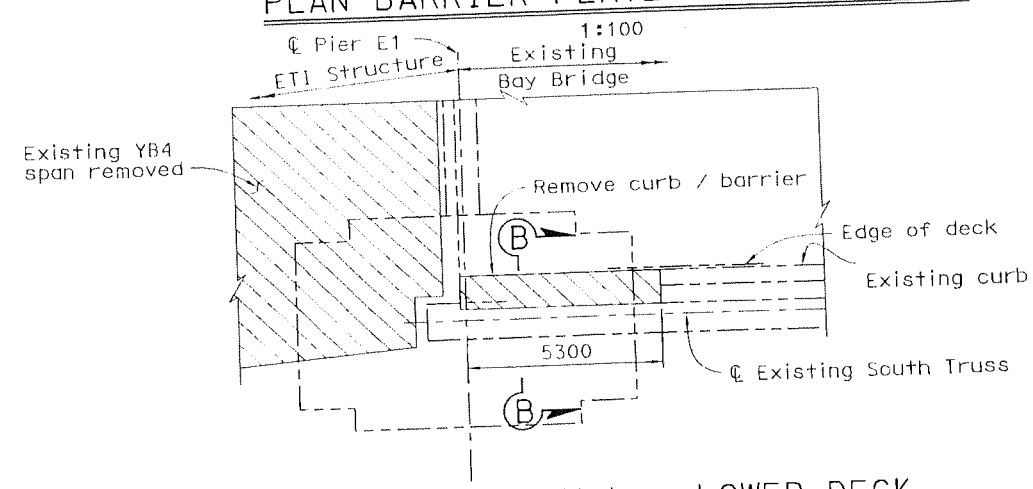

PLAN BARRIER REMOVAL - LOWER DECK

1:100

CONTRACT NO. 04-0120R4

CONTRACT CHANGE ORDER NO 174

SHEET 8 -- 14

LEGEND:

- Indicates existing structure
- Areas to be removed
- Indicates steel deck plate with V-grooves at ±45°

Notes:

1. The Contractor shall verify all controlling field dimensions before ordering or fabricating any material.
2. For Expansion Joint details, see "Pier E1 Expansion Joint Details" sheets.

ALL DIMENSIONS ARE IN MILLIMETERS UNLESS OTHERWISE SHOWN

Caltrans Metric

T.Y. LIN / MOFFATT & NICHOL
Two Harrison Street, Suite 500
San Francisco, CA 94105

100% PS&E

SAN FRANCISCO OAKLAND BAY BRIDGE
EAST SPAN SEISMIC SAFETY PROJECT

EAST TIE-IN

PIER E1 EXPANSION JOINT BARRIER NO. 1

T. Ostrom/M. Whiteside/A. Akinsanya	DESIGN	BY C. Redfield, R. Nutt	CHECKED S. Cheng
DESIGN OVERSIGHT	DETAILS	BY S. Lee, P. Zhao	CHECKED A. Lee
SIGN OFF DATE	QUANTITIES	BY H. Nelson	CHECKED A. Lee

PREPARED FOR THE STATE OF CALIFORNIA DEPARTMENT OF TRANSPORTATION

M. Sah
PROJECT ENGINEER
S. Abbas
PROJECT MANAGER

BRIDGE NO. 34-0006 (TEMP)
KILOMETER POST 12.6

CU
EA 0120R4

DISREGARD PRINTS BEARING EARLIER REVISION DATES

REVISION DATES (PRELIMINARY STAGE ONLY) 11/05/07 4/07/08 5/12/08

SHEET 105 OF 214

ORIGINAL SCALE IN MILLIMETERS FOR REDUCED PLANS 0 10 20 30 40 50 60 70 80 90 100

DESIGN DETAIL SHEET (METRIC) (REV. 3/1/98)
#DATE# #TIME# Pen Table File

FILE => p:\bb\04-012001\eti\dgn\akpejb01.dgn

USERNAME => ALee DATE PLOTTED => 5/12/2008 TIME PLOTTED => 9:58:48 AM

Notes:

1. The Contractor shall verify all controlling field dimensions before ordering or fabricating any material.
2. For Section A-A through G-G, see "Pier E1 Expansion Joint Barrier No. 3" sheet.
3. For details of slotted holes, see Detail 3 on "Bent 52A Expansion Joint Barrier No. 2" sheet.
4. For details of bolts, see Detail 4 on "Bent 52A Expansion Joint Barrier No. 2" sheet.
5. All bolts shall be A325, unless noted otherwise.
6. Concrete fill shall be lightweight (17.3 kN/m³ or 110 pcf) with f'c=28 MPa.

Legend:

- Indicates existing structure
- Indicates steel deck plate with V-grooves at 45°

Caltrans Metric

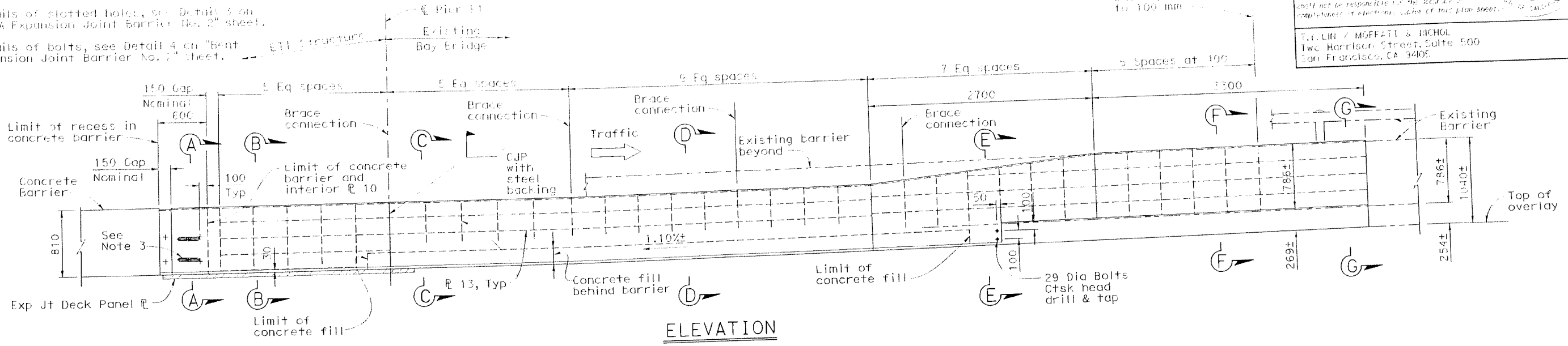

ELEVATION
1:25

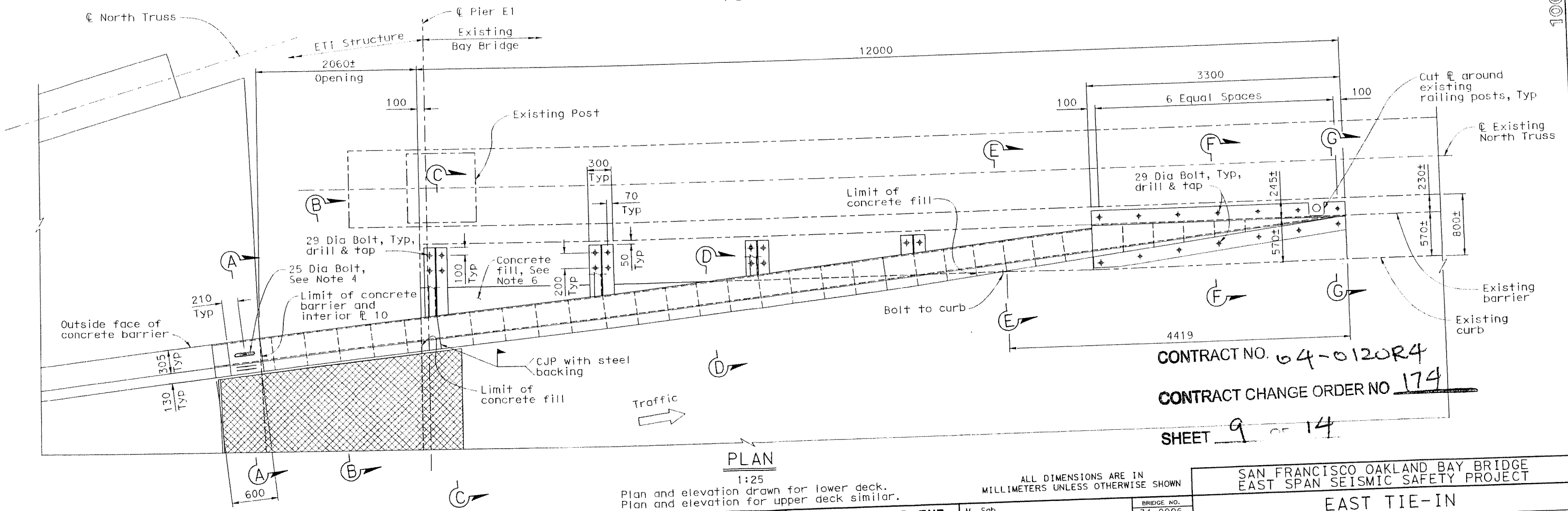

PLAN
1:25
Plan and elevation drawn for lower deck.
Plan and elevation for upper deck similar.

ALL DIMENSIONS ARE IN MILLIMETERS UNLESS OTHERWISE SHOWN

CONTRACT NO. 04-0120R4

CONTRACT CHANGE ORDER NO 174

SHEET 9 OF 14

T. Ostrom/M. Whiteside/A. Akinsanya
DESIGN OVERSIGHT

SIGN OFF DATE

	BY	CHECKED
DESIGN	C. Redfield, R. Nutt	S. Cheng
DETAILS	S. Lee, P. Zhao	A. Lee
QUANTITIES	H. Nelson	A. Lee

PREPARED FOR THE STATE OF CALIFORNIA
DEPARTMENT OF TRANSPORTATION

M. Sah
PROJECT ENGINEER
S. Abbas
PROJECT MANAGER
CU
EA 0120R4

BRIDGE NO. 34-0006 (TEMP)
KILOMETER POST 12.6

DISREGARD PRINTS BEARING EARLIER REVISION DATES

SAN FRANCISCO OAKLAND BAY BRIDGE
EAST SPAN SEISMIC SAFETY PROJECT

EAST TIE-IN

PIER E1 EXPANSION JOINT BARRIER NO. 2

REVISION DATES (PRELIMINARY STAGE ONLY)
11/05/03 | 4/07/08 | 5/12/08

SHEET 106 OF 214

ORIGINAL SCALE IN MILLIMETERS FOR REDUCED PLANS 0 10 20 30 40 50 60 70 80 90 100

DESIGN DETAIL SHEET (METRIC) (REV. 3/1/98)
$DATE$ $TIME$ Pen Table File

FILE => p:\bb\04-012001\eti\dgn\akpejb02.dgn

T.Y. LIN / MOFFATT & NICHOL
Two Harrison Street, Suite 500
San Francisco, CA 94105

TIME PLOTTED => 9:58:50 AM
DATE PLOTTED => 5/12/2008
USERNAME => ALee

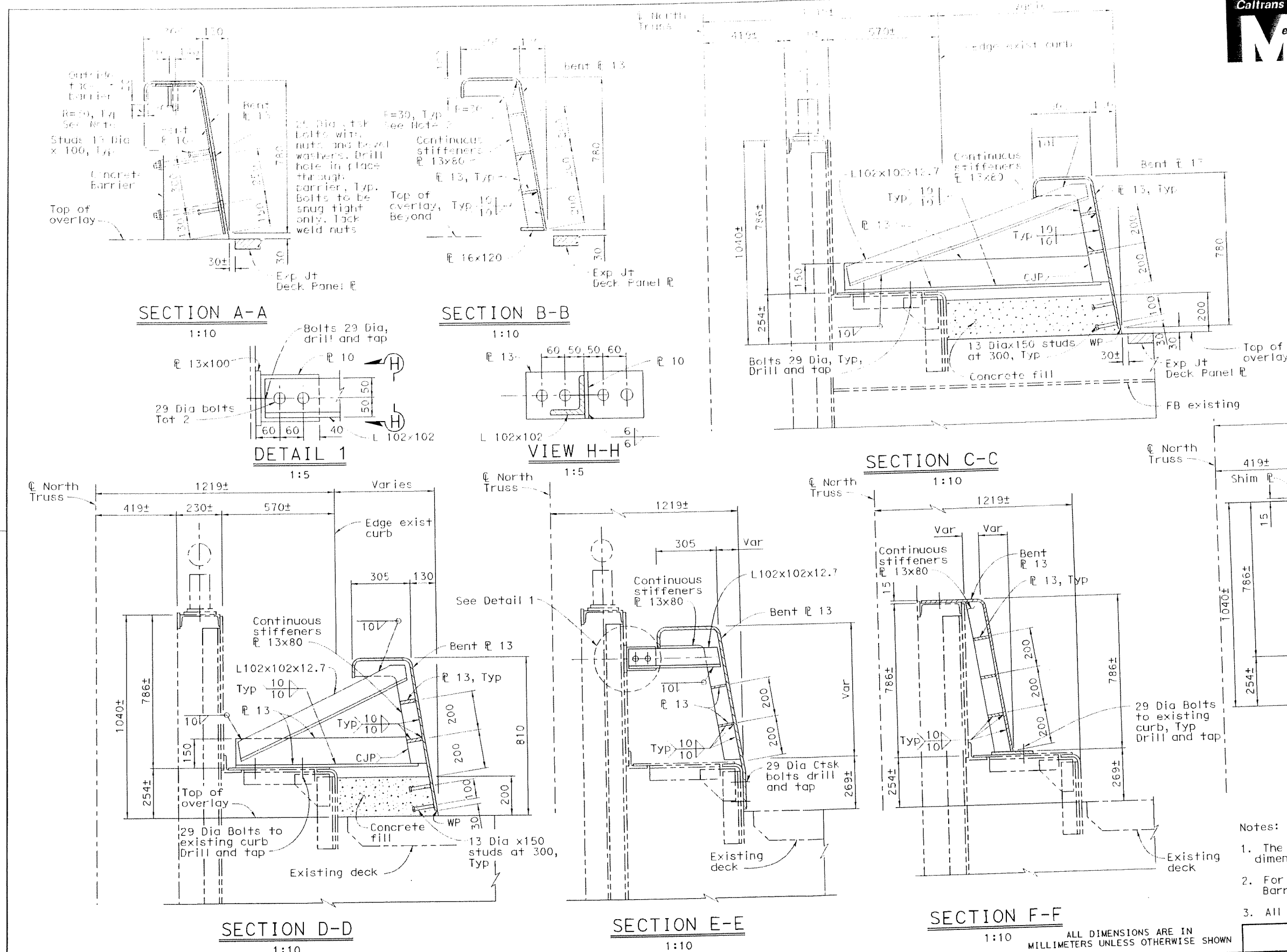

Caltrans Metric

T.Y. LIN / MOFFATT & NICHOL
Two Harrison Street, Suite 500
San Francisco, CA 94105

LEGEND:

- - - - Indicates existing structure

CONTRACT NO. 04-0120R4

CONTRACT CHANGE ORDER NO 174

SHEET 10 OF 14

Notes:

1. The Contractor shall verify all controlling field dimensions before ordering or fabricating any material.
2. For detail of ℄ bend, see "Bent 52A Expansion Joint Barrier no. 2" sheet.
3. All bolts shall be A325, unless noted otherwise.

ALL DIMENSIONS ARE IN MILLIMETERS UNLESS OTHERWISE SHOWN

SAN FRANCISCO OAKLAND BAY BRIDGE
EAST SPAN SEISMIC SAFETY PROJECT

EAST TIE-IN

PIER E1 EXPANSION JOINT BARRIER NO. 3

T. Ostrom/M. Whiteside/A. Akinsanya
DESIGN OVERSIGHT

SIGN OFF DATE

	BY	CHECKED
DESIGN	C. Redfield, R. Nutt	S. Cheng
DETAILS	S. Lee, P. Zhao	A. Lee
QUANTITIES	H. Nelson	A. Lee

PREPARED FOR THE STATE OF CALIFORNIA DEPARTMENT OF TRANSPORTATION

M. Sah
PROJECT ENGINEER
S. Abbas
PROJECT MANAGER

BRIDGE NO. 34-0006 (TEMP)
KILOMETER POST 12.6

CU
EA 0120R4

DISREGARD PRINTS BEARING EARLIER REVISION DATES

REVISION DATES (PRELIMINARY STAGE ONLY) 11/05/07 4/02/08 5/12/08

SHEET 107 OF 214

DESIGN DETAIL SHEET (METRIC) (REV. 3/1/98)
@DATE@ @TIME@ Pen Table File

ORIGINAL SCALE IN MILLIMETERS FOR REDUCED PLANS 0 10 20 30 40 50 60 70 80 90 100

FILE => p:\bb\04-012001\eti\dgn\akpejb08.dgn

100% PS&E

FILE => p:\bb\04-012001\eti\dgn\akpejb08.dgn
TIME PLOTTED => 9:59:03 AM
DATE PLOTTED => 5/12/2008
USERNAME => ALee

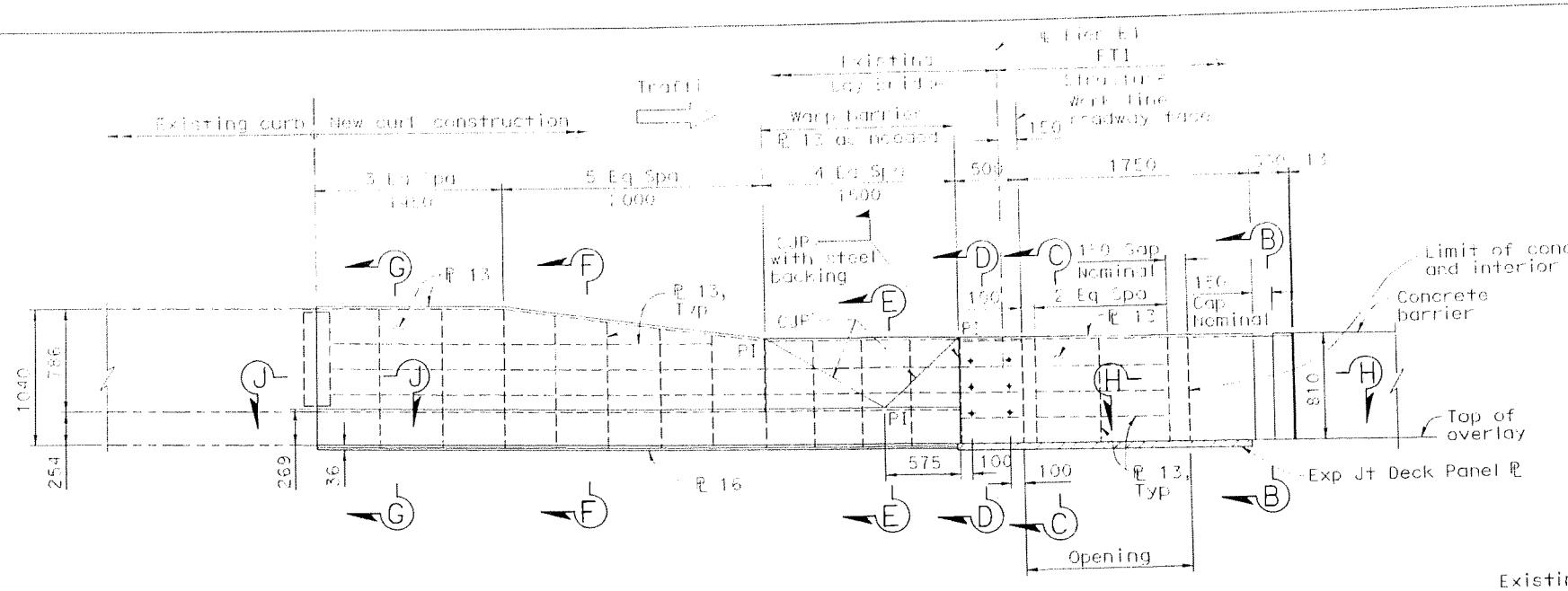

ELEVATION VIEW A-A

1:25

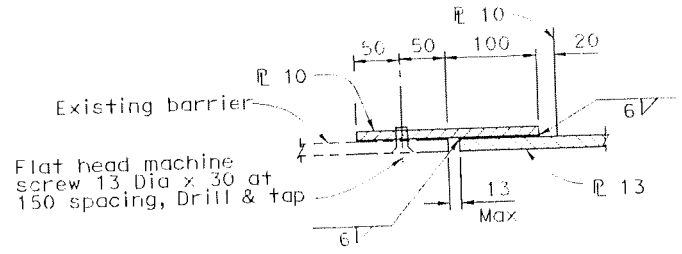

SECTION J-J

1:4

Section K-K Similar

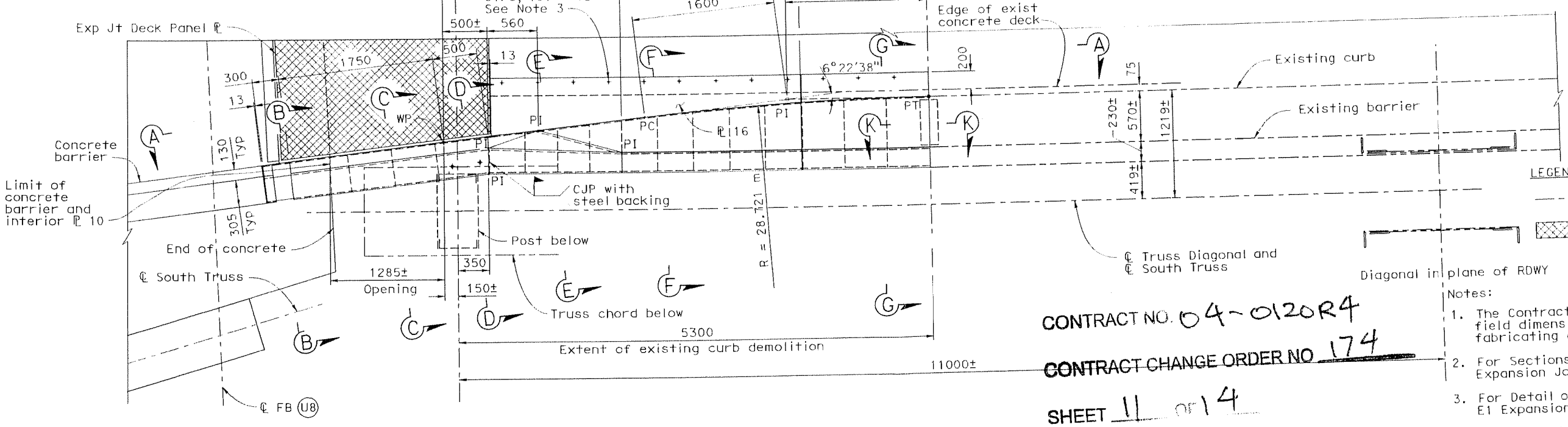

UPPER LEVEL PLAN

1:25

Traffic

LEGEND:

Indicates existing structure

Indicates steel deck plate with V-grooves at ±45°

Notes:

1. The Contractor shall verify all controlling field dimensions before ordering or fabricating any material.
2. For Sections B-B through H-H, see "Pier E1 Expansion Joint Barrier No. 5" sheet.
3. For Detail of Mechanical Anchors see "Pier E1 Expansion Joint Barrier No.5" sheet.
4. All bolts shall be A325, unless noted otherwise.

CONTRACT NO. 04-0120R4

CONTRACT CHANGE ORDER NO 174

SHEET 11 OF 14

ALL DIMENSIONS ARE IN MILLIMETERS UNLESS OTHERWISE SHOWN

T. Ostrom/M. Whiteside/A. Akinsanya
DESIGN OVERSIGHT

SIGN OFF DATE

DESIGN	BY C. Redfield, R. Nutt	CHECKED S. Cheng	
DETAILS	BY S. Lee, P. Zhao	CHECKED A. Lee	
QUANTITIES	BY H. Nelson	CHECKED A. Lee	

PREPARED FOR THE STATE OF CALIFORNIA
DEPARTMENT OF TRANSPORTATION

M. Sah
PROJECT ENGINEER
S. Abbas
PROJECT MANAGER
CU
EA 0120R4

BRIDGE NO. 34-0006 (TEMP)
KILOMETER POST 12.6

DISREGARD PRINTS BEARING EARLIER REVISION DATES

REVISION DATES (PRELIMINARY STAGE ONLY)

SAN FRANCISCO OAKLAND BAY BRIDGE
EAST SPAN SEISMIC SAFETY PROJECT

EAST TIE-IN

PIER E1 EXPANSION JOINT BARRIER NO. 4

SHEET 108 OF 214

DESIGN DETAIL SHEET (METRIC) (REV. 3/1/98)
DATE *TIME* Pen Table File

ORIGINAL SCALE IN MILLIMETERS FOR REDUCED PLANS 0 10 20 30 40 50 60 70 80 90 100

FILE => p:\bb\04-012001\eti\dgn\akpejb04.dgn

T.Y. LIN / MOFFATT & NICHOL
Two Harrison Street, Suite 500
San Francisco, CA 94105

100% PS&E

FILE => p:\bb\04-012001\eti\dgn\akpejb04.dgn
TIME PLOTTED => 09:58:52 AM
DATE PLOTTED => 5/12/2008
USERNAME => ALee

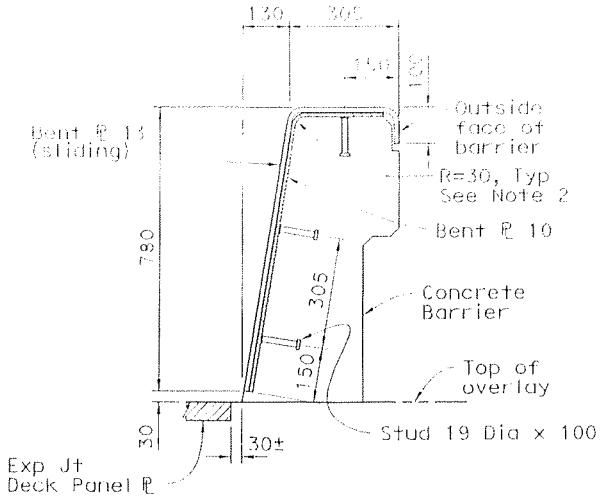

SECTION B-B
1:10

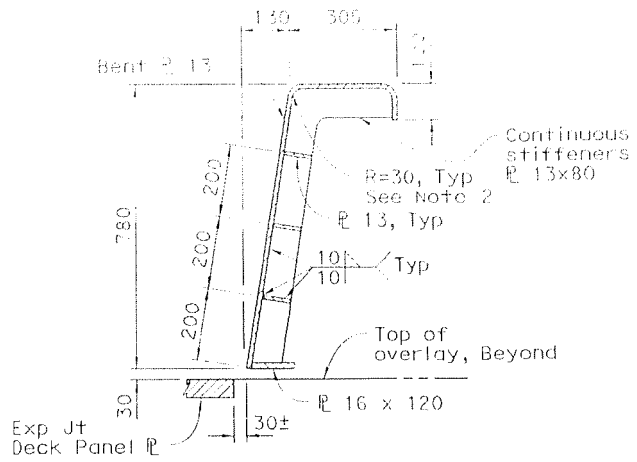

SECTION C-C
1:10

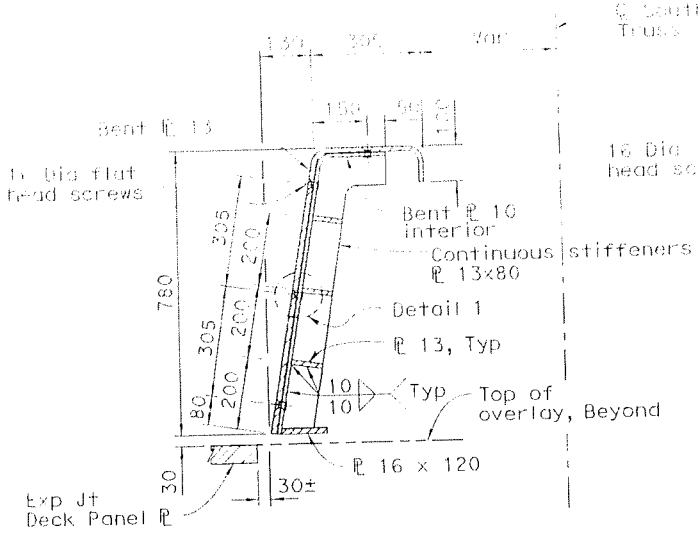

SECTION D-D
1:10

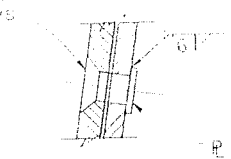

DETAIL 1
1:2

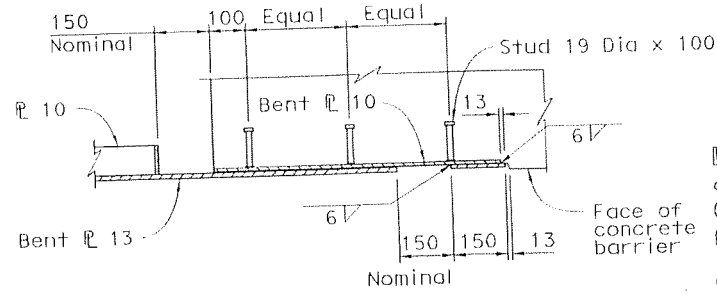

SECTION H-H
1:10

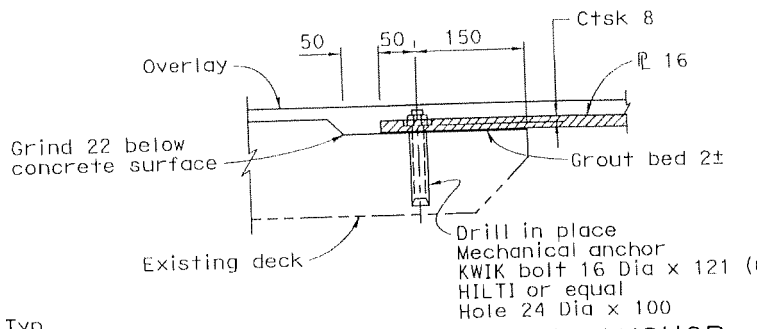

DETAIL OF MECHANICAL ANCHOR
1:5

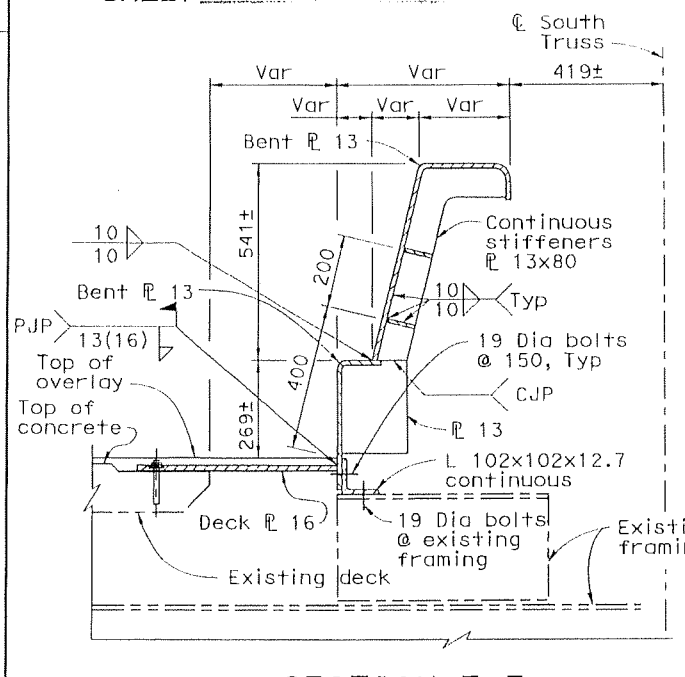

SECTION E-E
1:10

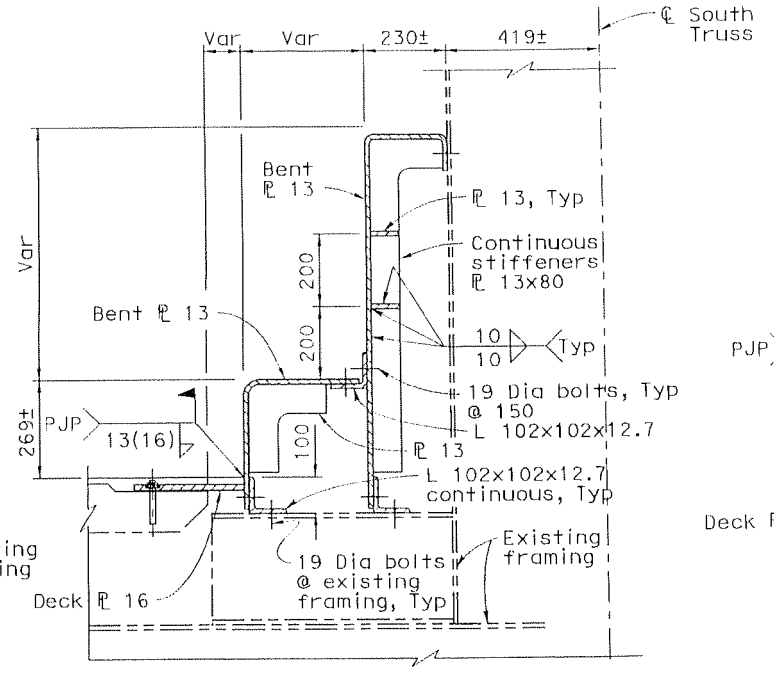

SECTION F-F
1:10

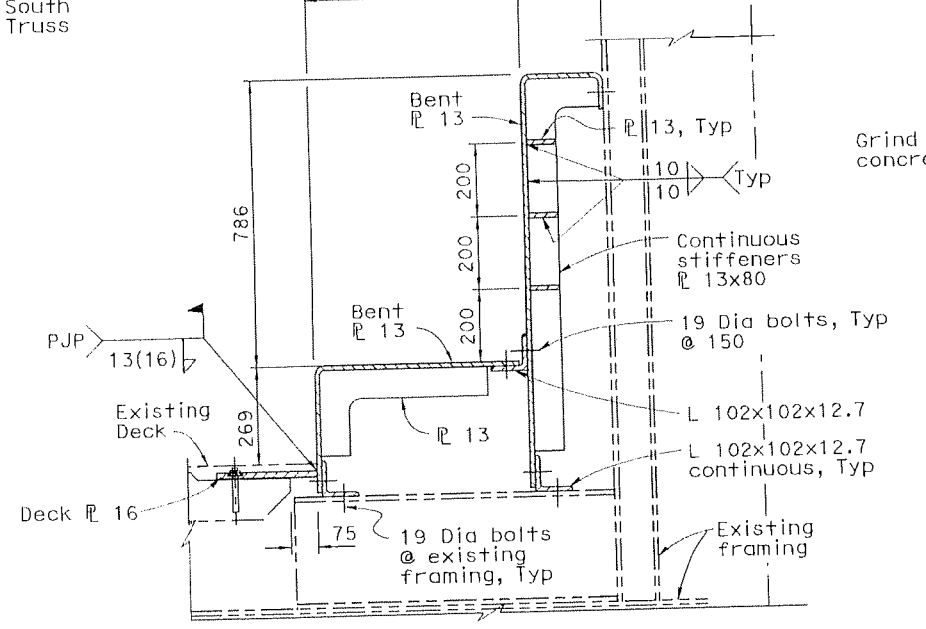

SECTION G-G
1:10

LEGEND:

——— Indicates existing structure

Notes:

1. The Contractor shall verify all controlling field dimensions before ordering or fabricating any material.
2. For detail of ℄ bend, see "Bent 52A Expansion Joint Barrier No. 2" sheet.
3. All bolts shall be A325, unless noted otherwise.

ALL DIMENSIONS ARE IN MILLIMETERS UNLESS OTHERWISE SHOWN

CONTRACT NO. 04-0120R4

CONTRACT CHANGE ORDER NO 174

SHEET 12 OF 14

Caltrans Metric

DIST	COUNTY	ROUTE	PROJECT NO. / TOTAL PROJECT	SHEET NO.	TOTAL
04	SF	80	12-..1?..		

REGISTERED CIVIL ENGINEER

SIGNATURE APPROVAL DATE

The State of California or its officers or agents shall not be responsible for the accuracy or completeness of electronic copies of this plan sheet.

REGISTERED PROFESSIONAL ENGINEER — CIVIL — STATE OF CALIFORNIA

T.Y.LIN / MOFFATT & NICHOL
Two Harrison Street, Suite 500
San Francisco, CA 94105

100% PS&E

T. Ostrom/M. Whiteside/A. Akinsanya, DESIGN OVERSIGHT	DESIGN	BY C. Redfield, R. Nutt	CHECKED S. Cheng
SIGN OFF DATE	DETAILS	BY S. Lee, P. Zhao	CHECKED A. Lee
	QUANTITIES	BY H. Nelson	CHECKED A. Lee

PREPARED FOR THE STATE OF CALIFORNIA DEPARTMENT OF TRANSPORTATION

M. Sah, PROJECT ENGINEER
S. Abbas, PROJECT MANAGER
CU
EA 0120R4

BRIDGE NO. 34-0006 (TEMP)
KILOMETER POST 12.6

SAN FRANCISCO OAKLAND BAY BRIDGE
EAST SPAN SEISMIC SAFETY PROJECT

EAST TIE-IN

PIER E1 EXPANSION JOINT BARRIER NO. 5

DISREGARD PRINTS BEARING EARLIER REVISION DATES →

REVISION DATES (PRELIMINARY STAGE ONLY): 11/09/07 | 1/09/08 | 5/12/08

SHEET 109 OF 214

DESIGN DETAIL SHEET (METRIC) (REV. 3/1/98)
◆DATE◆ ◆TIME◆ Pen Table File

ORIGINAL SCALE IN MILLIMETERS FOR REDUCED PLANS 0 10 20 30 40 50 60 70 80 90 100

FILE => p:\bb\04-012001\etf\dgn\akpejb05.dgn

DATE PLOTTED => 5/12/2008 TIME PLOTTED => 9:58:55 AM USERNAME => Alee

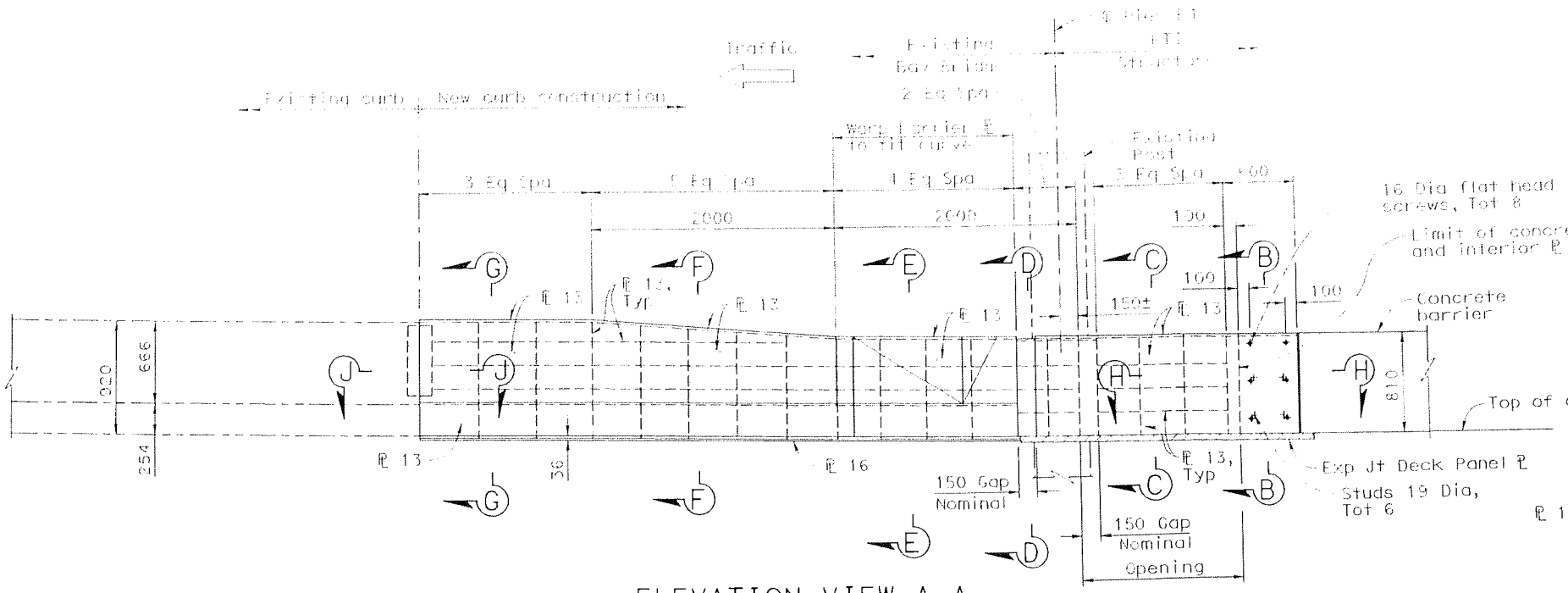

ELEVATION VIEW A-A

1:25

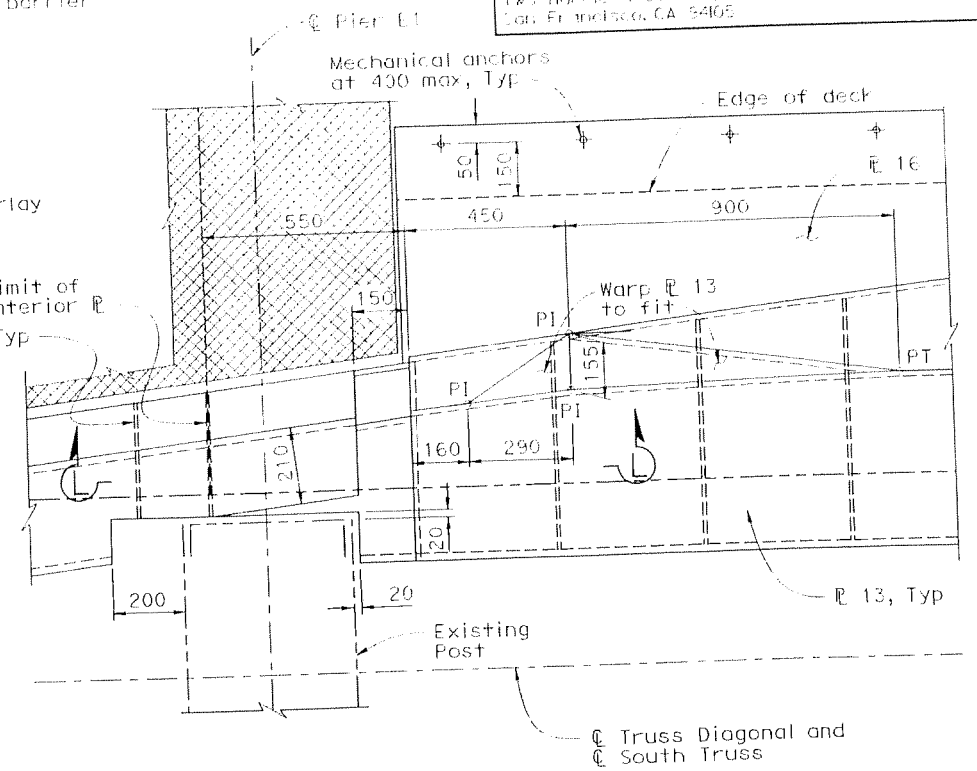

DETAIL 1

1:10

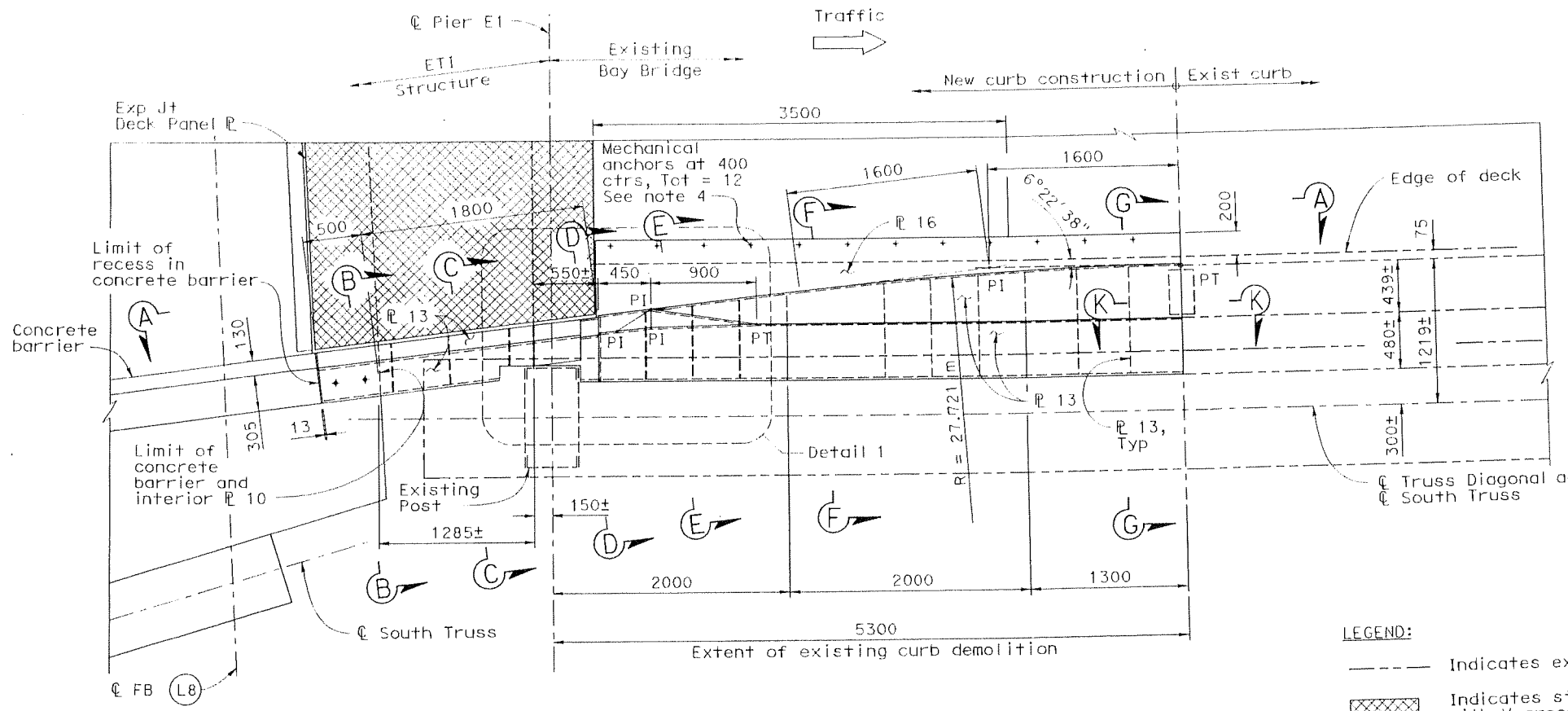

LOWER LEVEL PLAN

1:25

LEGEND:

——— Indicates existing structure

Indicates steel deck plate with V-grooves at ±45°

CONTRACT NO. 04-0120R4

CONTRACT CHANGE ORDER NO 174

SHEET 13 ~ 14

Notes:

1. The Contractor shall verify all controlling field dimensions before ordering or fabricating any material.
2. For sections B-B through H-H and L-L, See "Pier E1 Expansion Joint Barrier No. 7" sheet.
3. For Sections J-J and K-K, See "Pier E1 Expansion Joint Barrier No. 4" sheet.
4. For detail of mechanical anchors see "Pier E1 Expansion Joint Barrier No. 5" sheet.
5. All bolts shall be A325, unless noted otherwise.

ALL DIMENSIONS ARE IN MILLIMETERS UNLESS OTHERWISE SHOWN

SAN FRANCISCO OAKLAND BAY BRIDGE EAST SPAN SEISMIC SAFETY PROJECT

EAST TIE-IN

PIER E1 EXPANSION JOINT BARRIER NO. 6

T. Ostrom/M. Whiteside/A. Akinsanya, DESIGN OVERSIGHT	DESIGN	BY C. Redfield, R. Nutt	CHECKED S. Cheng
SIGN OFF DATE	DETAILS	BY S. Lee, P. Zhao	CHECKED A. Lee
	QUANTITIES	BY H. Nelson	CHECKED A. Lee

PREPARED FOR THE STATE OF CALIFORNIA DEPARTMENT OF TRANSPORTATION

M. Sah, PROJECT ENGINEER
S. Abbas, PROJECT MANAGER
CU
EA 0120R4

BRIDGE NO. 34-0006 (TEMP)
KILOMETER POST 12.6

DISREGARD PRINTS BEARING EARLIER REVISION DATES

REVISION DATES (PRELIMINARY STAGE ONLY): 11/26/07 | 4/23/08 | 5/12/08

SHEET 110 OF 214

DESIGN DETAIL SHEET (METRIC) (REV. 3/1/98)
@DATE@ @TIME@ Pen Table File

ORIGINAL SCALE IN MILLIMETERS FOR REDUCED PLANS 0 10 20 30 40 50 60 70 80 90 100

FILE => p:\bb\04-0120R1\ef1\dgn\akpejb06.dgn

USERNAME => Alee

DATE PLOTTED => 5/12/2008

TIME PLOTTED => 9:58:57 AM

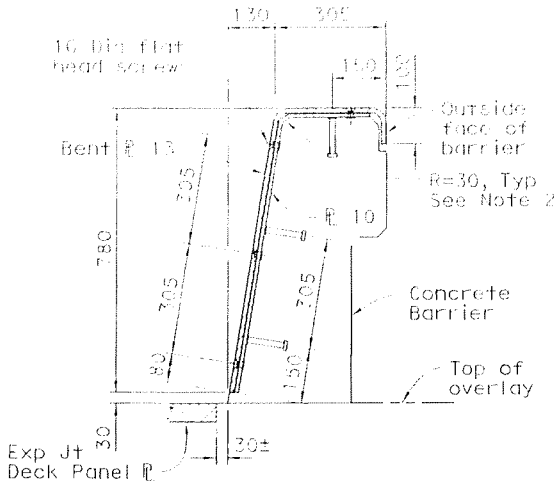

SECTION B-B

1:10

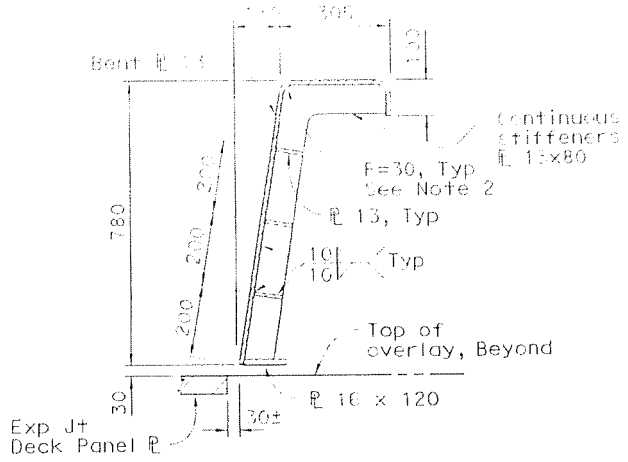

SECTION C-C

1:10

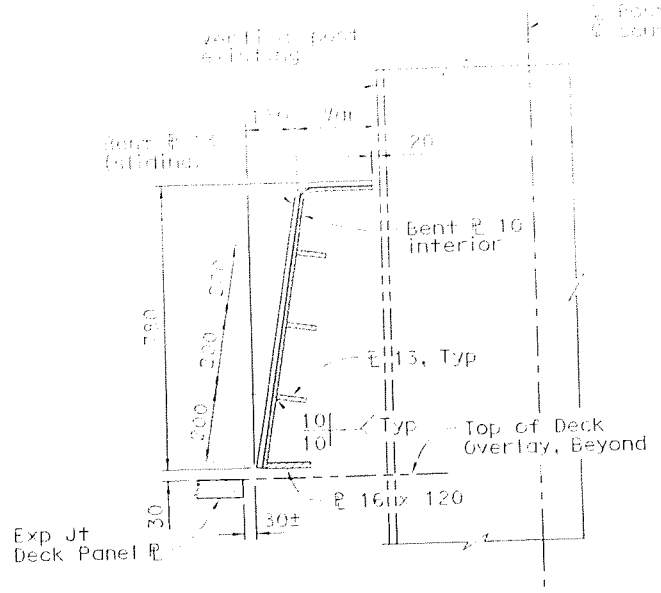

SECTION D-D

1:10

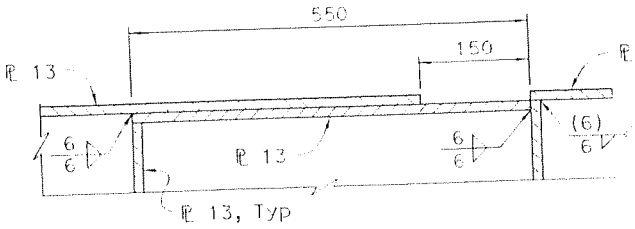

SECTION L-L

1:5

CONTRACT NO. 04-0120R4

CONTRACT CHANGE ORDER NO 174

SHEET 14 OF 14

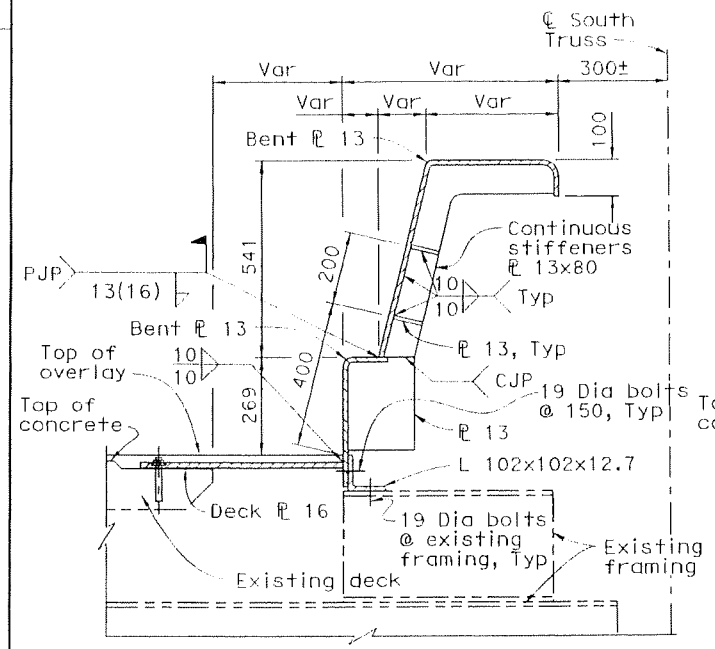

SECTION E-E

1:10

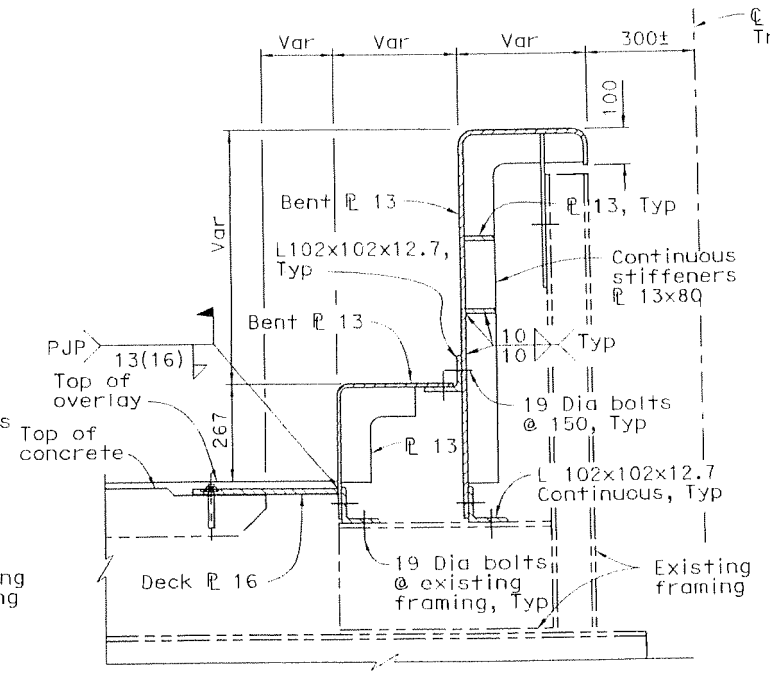

SECTION F-F

1:10

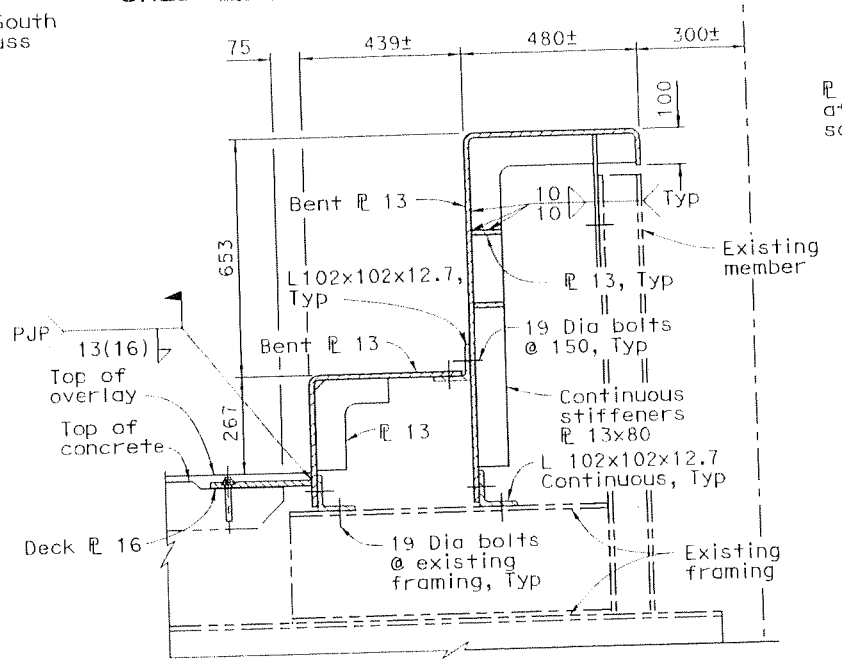

SECTION G-G

1:10

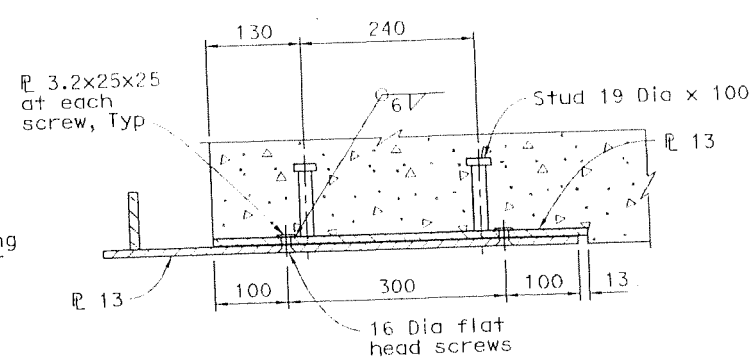

SECTION H-H

1:5

LEGEND:

——— Indicates existing structure

Notes:

1. The Contractor shall verify all controlling field dimensions before ordering or fabricating any material.
2. For detail of ℄ bend, see "Bent 52A Expansion Joint Barrier No. 2" sheet.
3. All bolts shall be A325, unless noted otherwise.

ALL DIMENSIONS ARE IN MILLIMETERS UNLESS OTHERWISE SHOWN

SAN FRANCISCO OAKLAND BAY BRIDGE
EAST SPAN SEISMIC SAFETY PROJECT

EAST TIE-IN

PIER E1 EXPANSION JOINT BARRIER NO. 7

T. Ostrom/M. Whiteside/A. Akinsanya
DESIGN OVERSIGHT

SIGN OFF DATE

DESIGN	BY C. Redfield, R. Nutt	CHECKED S. Cheng	
DETAILS	BY S. Lee, P. Zhao	CHECKED A. Lee	
QUANTITIES	BY H. Nelson	CHECKED A. Lee	

PREPARED FOR THE STATE OF CALIFORNIA DEPARTMENT OF TRANSPORTATION

M. Sah
PROJECT ENGINEER
S. Abbas
PROJECT MANAGER

CU
EA 0120R4

BRIDGE NO. 34-0006 (TEMP)
KILOMETER POST 12.6

DISREGARD PRINTS BEARING EARLIER REVISION DATES →

REVISION DATES (PRELIMINARY STAGE ONLY)

SHEET 111 OF 214

DESIGN DETAIL SHEET (METRIC) (REV. 3/1/98)
©DATE© ©TIME© Pen Table File

ORIGINAL SCALE IN MILLIMETERS FOR REDUCED PLANS 0 10 20 30 40 50 60 70 80 90 100

FILE => p:\bb\04-012001\efi\dgn\akpeib07.dgn

100% PS&E

DATE PLOTTED => 5/12/2008
TIME PLOTTED => 9:59:00 AM
USERNAME => AL96

STATE OF CALIFORNIA - DEPARTMENT OF TRANSPORTATION

CONTRACT CHANGE ORDER MEMORANDUM

TO: MIKE FORNER / DEANNA VILCHECK	FILE: E.A. 04 - 0120R4
	CO-RTE-PM SF-80-12.6/13.2
FROM: BILL CASEY	FED. NO. ACBRIM-080-1(097)N
CCO#: 174 SUPPLEMENT#: 0 Category Code: CHPA	CONTINGENCY BALANCE (incl. this change) $59,316,492.60
COST: $350,000.00 INCREASE ☑ DECREASE ☐	HEADQUARTERS APPROVAL REQUIRED? ☑ YES ☐ NO
SUPPLEMENTAL FUNDS PROVIDED: $0.00	IS THIS REQUEST IN ACCORDANCE WITH ENVIRONMENTAL DOCUMENTS? ☑ YES ☐ NO
CCO DESCRIPTION: ETI Expansion Joint Barrier Plates	PROJECT DESCRIPTION: CONSTRUCT ROUTE 80 TEMP BYPASS STRUCTURE

Original Contract Time:	Time Adj. This Change:	Previously Approved CCO Time Adjustments:	Percentage Time Adjusted: (including this change)	Total # of Unreconciled Deferred Time CCO(s): (including this change)
475 Day(s)	DEF Day(s)	1195 Day(s)	252 %	8

THIS CHANGE ORDER PROVIDES FOR:

compensating the Contractor for all costs associated with furnishing, fabricating, coating and delivering four (4) expansion joints barrier plates for Bent 52A and four (4) expansion joint barrier plates for Pier E1.

This project, the Temporary Bypass Structure (TBS), was awarded in March 2004 to construct a detour that will allow for the tie in of the new east span of the San Francisco Oakland Bay Bridge to Yerba Buena Island. The TBS encompasses three main structures, the East Tie-In to the existing bridge, the West Tie-In (WTI) to Yerba Buena Island, and the Viaduct structure between the two tie ins.

A December 14, 2006 Department strategy memorandum, approved by Tony Anziano, Toll Bridge Program Manager, and Richard Land, Chief Engineer, recommended that the Department assume the design responsibility for the East Tie-In (ETI) structure. Based on this memorandum, the design of the structure was changed from a design that incorporated the existing steel truss bridge with the new structure to a design that replaces the existing structure with a new structure (roll out / roll in).

The new ETI design requires the fabrication and installation of 4 expansion joints where the upper and lower decks conform to the new Viaduct structure and the existing SFOBB. The expansion joint barrier plates are needed to connect the concrete barriers between the new Viaduct structure and the existing SFOBB.

This work will be paid for as Extra Work at Force for an estimated cost of $350,000.00 which can be funded through the available contingency balance. A cost analysis is on file.

Adjustment of contract time is deferred pending completion of the work specified in this change as it may become the controlling operation in accordance with Section 8-1.07 "Liquidated Damages", of the Standard Specifications and Section 10-1.20 "Time Related Overhead (TRO)" of the Special Provisions.

Compensation for delays resulting from this work will be made in accordance with Section 8-1.09 "Right of Way Delays" of the Standard Specifications and Section 10-1.20 "Time Related Overhead" of the Special Provisions.

This change was requested by Mike Whiteside - YBI Coordination Engineer, per Memorandum dated October 7, and October 31, 2008.

Alec Melkonians - Asst. Project Manager, Toll Bridge Program, Hong Wong - Project Engineer, and Lina Ellis - Structure Maintenance, concurred with this change.

ADA Notice: For individuals with sensory disabilities, this document is available in alternate formats. For information call: (916) 654-6410 or TDD (916) 654-3880 or write Records and Forms Management, 1120 N Street, MS-89, Sacramento, CA 95814.

RECEIVED
JUN 22 09
01058

CONCURRED BY:		
Construction Engineer:	Bill Casey, Resident Engineer	Date 5-7-09
Bridge Engineer:	Mike Whiteside, Toll Bridge Design	Date 10/31/08
Project Engineer:	Hong Wong, PE	Date 4/30/09
Project Manager:	Alec Melkonians	Date 4/30/09
FHWA Rep.:		Date
Environmental:		Date
Other (specify):	Lina Ellis - Strc. Maint.	Date 5/12/09
Other (specify):		Date
District Prior Approval By:		Date
HQ (Issue Approve) By:	Bob Molera, HQ CCO Engineer	Date 5/8/09
Resident Engineer's Signature:		Date

5-7-09

ESTIMATE OF COST

	THIS REQUEST	TOTAL TO DATE
ITEMS	$0.00	$0.00
FORCE ACCOUNT	$350,000.00	$350,000.00
AGREED PRICE	$0.00	$0.00
ADJUSTMENT	$0.00	$0.00
TOTAL	$350,000.00	$350,000.00

FEDERAL PARTICIPATION

☐ PARTICIPATING ☐ PARTICIPATING IN PART ☑ NONE
☐ NON-PARTICIPATING (MAINTENANCE) ☐ NON-PARTICIPATING

FEDERAL SEGREGATION (if more than one Funding Source or P.I.P. type)
☐ CCO FUNDED PER CONTRACT ☐ CCO FUNDED AS FOLLOWS

FEDERAL FUNDING SOURCE	PERCENT

ADA Notice: For individuals with sensory disabilities, this document is available in alternate formats. For information call: (916) 654-6410 or TDD (916) 654-3880 or write Records and Forms Management, 1120 N Street, MS-89, Sacramento, CA 95814.

STATE OF CALIFORNIA - DEPARTMENT OF TRANSPORTATION

CONTRACT CHANGE ORDER

Change Requested by: Engineer

CCO 174	Suppl. No. 1	Contract No. 04 - 0120R4	Road SF-80-12.6/13.2	FED. AID LOC.: ACBRIM-080-1(097)N

To: CC **MYERS INC**

You are directed to make the following changes from the plans and specifications or do the following described work not included in the plans and specifications for this contract. ***NOTE: This change order is not effective until approved by the Engineer.***

Description of work to be done, estimate of quantities and prices to be paid. (Segregate between additional work at contract price, agreed price and force account.) Unless otherwise stated, rates for rental of equipment cover only such time as equipment is actually used and no allowance will be made for idle time. This last percentage shown is the net accumulated increase or decrease from the original quantity in the Engineer's Estimate.

Incorporate the changes to the expansion joints barrier plates at Bent 52A and Pier E1 of the East Tie-In portion of the Temporary Bypass Structure (Bridge No. 34-0006 (TEMP)) as shown in the revised plan sheets of Sheets No. 2 through 8 of this change order.

All revisions to the expansion joints barrier plates shown on Sheets No. 2 through 8 of this change order shall supersede the original plan sheets issued under Change Order No. 174.

Compensation for any additional costs associated with the fabrication of the expansion joint barrier plates resulting from the changes incorporated under this change order shall be paid as extra work at force account as previously provided under Change Order No. 174.

Estimated Cost: Increase ☐ Decrease ☐ **$0.00**

By reason of this order the time of completion will be adjusted as follows: Deferred

Submitted by		
Signature	Resident Engineer BILL CASEY	Date 9-31-09
Approval Recommended by		
Signature Deanna Vilcheck	Area Construction Manager DEANNA VILCHECK	Date 9/1/09
Engineer Approval by		
Signature Deanna Vilcheck	Area Construction Manager DEANNA VILCHECK	Date 11/4/09

We the undersigned contractor, have given careful consideration to the change proposed and agree, if this proposal is approved, that we will provide all equipment, furnish the materials, except as may otherwise be noted above, and perform all services necessary for the work above specified, and will accept as full payment therefor the prices shown above.

NOTE: If you, the contractor, do not sign acceptance of this order, your attention is directed to the requirements of the specifications as to proceeding with the ordered work and filing a written protest within the time therein specified.

Contractor Acceptance by		
Signature	(Print name and title) STEVE FRANCIS, CHIEF ESTIMATOR	Date 9.14.09

DIST	COUNTY	ROUTE	KILOMETER POST TOTAL PROJECT	SHEET No	TOTAL
04	SF	80	12.6/13.2		

REGISTERED CIVIL ENGINEER

10-01-08
PLANS APPROVAL DATE

REGISTERED PROFESSIONAL ENGINEER — Charles Redfield — No. C 27605 — Exp. 12/31/09 — CIVIL — STATE OF CALIFORNIA

The State of California or its officers or agents shall not be responsible for the accuracy or completeness of electronic copies of this plan sheet.

T.Y. LIN / MOFFATT & NICHOL
Two Harrison Street, Suite 500
San Francisco, CA 94105

Caltrans Metric

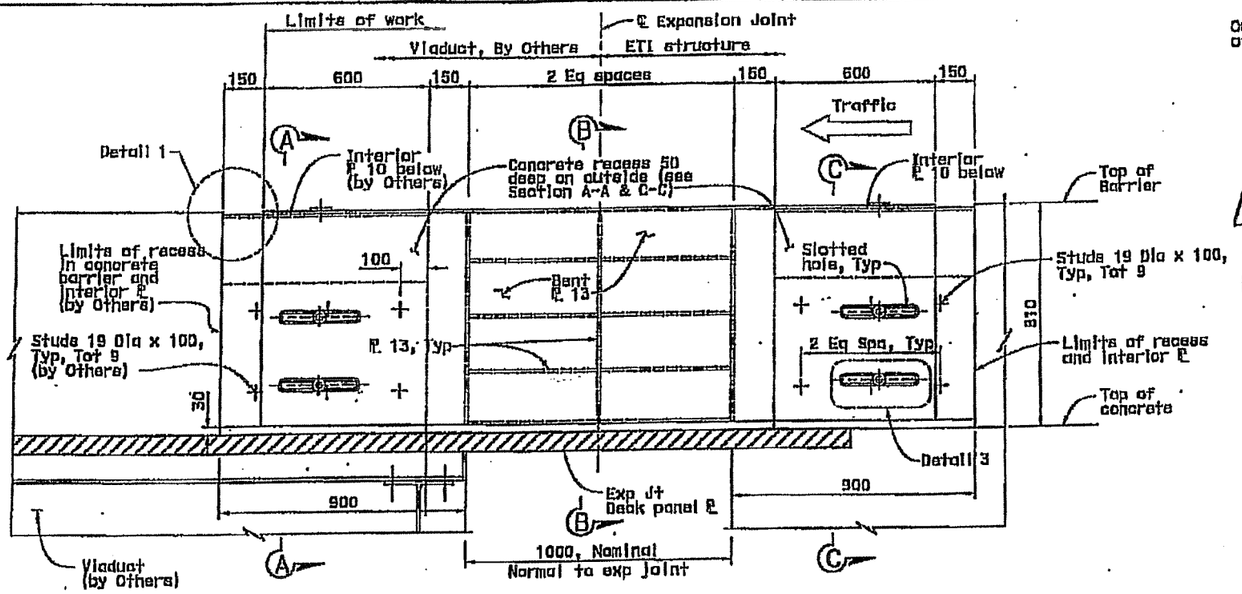

ELEVATION - UPPER DECK

1:10

Elevation shown for barrier on the upper deck left side. Other sides and levels similar

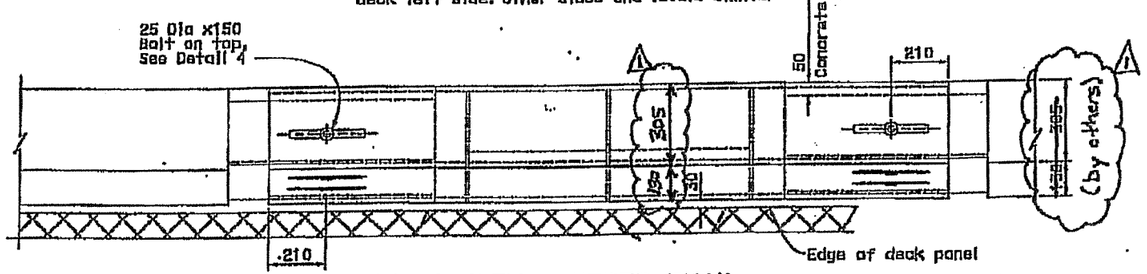

PLAN VIEW - UPPER DECK

1:10

Plan shown for barrier on the upper deck left side. Other sides and levels similar

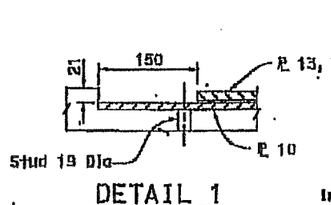

DETAIL 1

1:4

Upper Deck shown
Lower Deck similar

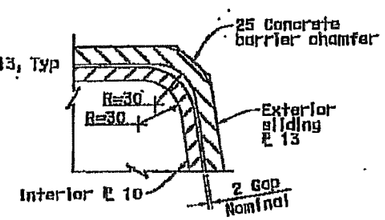

DETAIL 2

1:2

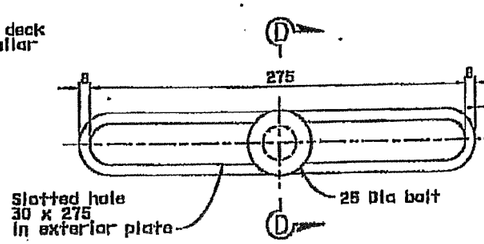

DETAIL 3

1:2

⚠ 6/25/09 CONCRETE BARRIER REV

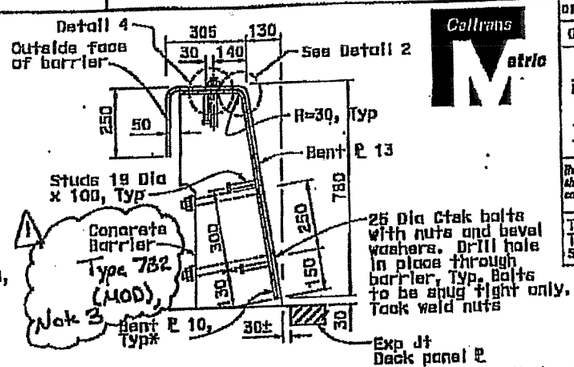

SECTION A-A

1:10

* Studs and Interior ℄ by Others.

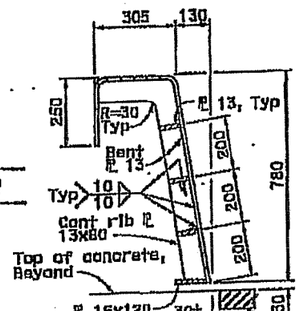

SECTION B-B

1:10

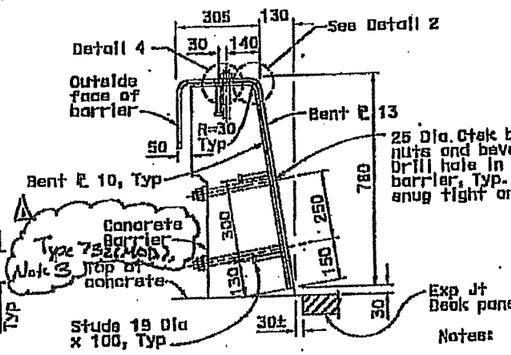

SECTION C-C

1:10

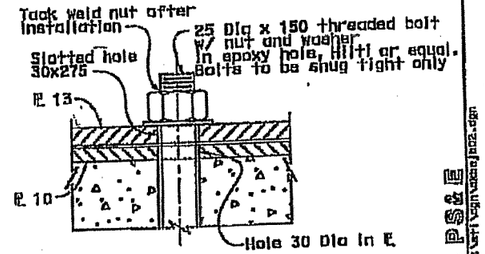

DETAIL 4

1:2

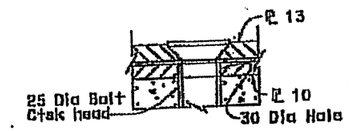

SECTION D-D

1:2

3. For barrier details not shown, see Bll-3

Notes:

1. The Contractor shall verify all controlling field dimensions before ordering or fabricating any material.
2. All bolts shall be A325, unless noted otherwise.

ALL DIMENSIONS ARE IN MILLIMETERS UNLESS OTHERWISE SHOWN

SAN FRANCISCO OAKLAND BAY BRIDGE
EAST SPAN SEISMIC SAFETY PROJECT

EAST TIE-IN

BENT 52A EXPANSION JOINT BARRIER NO. 2

DESIGN	BY C. Redfield, R. Hutt	CHECKED	S. Cheng	PREPARED FOR THE STATE OF CALIFORNIA DEPARTMENT OF TRANSPORTATION	H. Soh, PROJECT ENGINEER
DETAILS	BY S. Lee, P. Zhao	CHECKED	A. Lee		S. Abbas, PROJECT MANAGER
QUANTITIES	BY H. Nelson	CHECKED	A. Lee		CU EA 0120R4

T. Ostrom/M. Whiteside/A. Akinsanya
DESIGN OVERSIGHT

HIGH DEF DATE

BRIDGE NO. 34-0006 (TEMP)
KILOMETER POST 12.6

DISREGARD PRINTS BEARING EARLIER REVISION DATES

REVISION DATES (PRELIMINARY PLANS ONLY)								DSIGN	BY
								98	214

DESIGN DETAIL SHEET DATED FEB, 2/2/98
SCALES 8"INCH Fan Table File

ORIGINAL SCALE IN MILLIMETERS FOR REDUCED PLANS 0 10 20 30 40 50 60 70 80 90 100

FILE => ...

USERNAME => ALAN

DATE PLOTTED => 12/5/2008 TIME PLOTTED => 11:32:48 AM

100% PS&E

CONTRACT NO. 04-0120R4

CONTRACT CHANGE ORDER NO

SHEET 3 OF 8

174-S1

R1

Notes:

1. The Contractor shall verify all controlling field dimensions before ordering or fabricating any material.
2. For Section A-A through G-G, see "Pier E1 Expansion Joint Barrier No. 3" sheet.
3. For details of slotted holes, see Detail 3 on "Bent 52A Expansion Joint Barrier No. 2" sheet.
4. For details of bolts, see Detail 4 on "Bent 52A Expansion Joint Barrier No. 2" sheet.
5. All bolts shall be A325, unless noted otherwise.
6. Concrete fill shall be lightweight (17.3 kN/m or 110 pcf) with f'c=28 MPa.

LEGEND:

- - - - - Indicates existing structure
▨ Indicates steel deck plate with V-grooves at ±45°

MARK	DATE	DESCRIPTIONS	BY	CH'D	CCO#
2	7/16/09	CORRECTION PER MEETING WITH FABRICATOR	MCY	CR	
1	7/01/09	CORRECTION PER MEETING WITH FABRICATOR	HN	CR	

REVISIONS

CONTRACT CHANGE ORDER NO. ____
SHEET ____ OF ____

Caltrans Metric

DIST	COUNTY	ROUTE	KILOMETER POST TOTAL PROJECT	SHEET No	TOTAL
04	SF	80	12.6/13.2		

REGISTERED CIVIL ENGINEER
10-01-08
PLANS APPROVAL DATE

The State of California or its officers or agents shall not be responsible for the accuracy or completeness of electronic copies of this plan sheet.

REGISTERED PROFESSIONAL ENGINEER Charles Redfield No. C 27605 Exp. 12/31/09 CIVIL STATE OF CALIFORNIA

T.Y. LIN / MOFFATT & NICHOL
Two Harrison Street, Suite 500
San Francisco, CA 94105

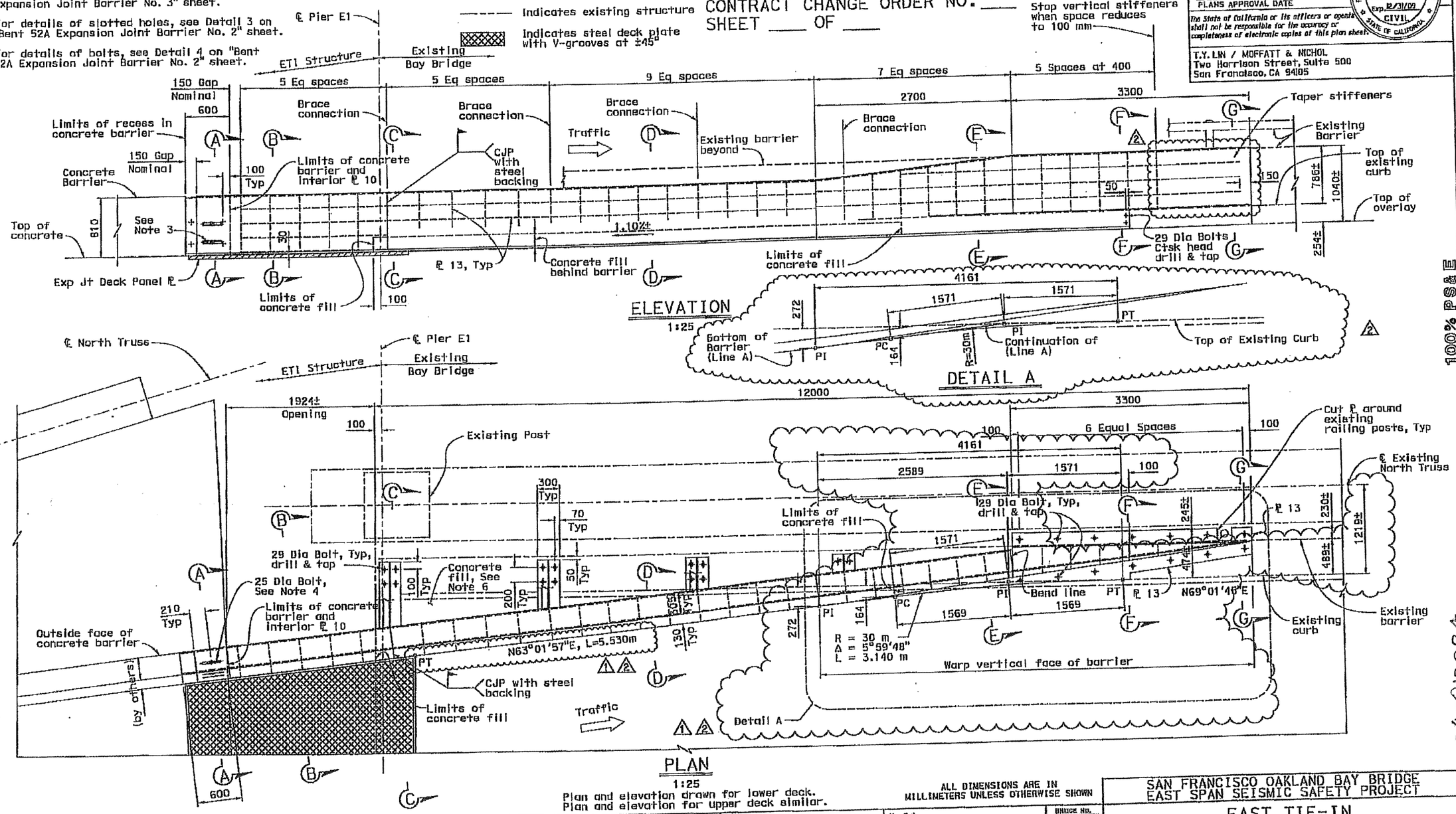

Plan and elevation drawn for lower deck.
Plan and elevation for upper deck similar.

ALL DIMENSIONS ARE IN MILLIMETERS UNLESS OTHERWISE SHOWN

SAN FRANCISCO OAKLAND BAY BRIDGE
EAST SPAN SEISMIC SAFETY PROJECT

EAST TIE-IN

PIER E1 EXPANSION JOINT BARRIER NO. 2

T. Ostrom/M. Whitesida/A. Akinsanya
DESIGN OVERSIGHT
SIGN OFF DATE

DESIGN BY C. Redfield, R. Nutt — CHECKED S. Cheng
DETAILS BY S. Lee, P. Zhao — CHECKED A. Lee
QUANTITIES BY H. Nelson — CHECKED A. Lee

PREPARED FOR THE STATE OF CALIFORNIA DEPARTMENT OF TRANSPORTATION

M. Soh
PROJECT ENGINEER
S. Abbas
PROJECT MANAGER

BRIDGE NO. 34-0006 (TEMP)
KILOMETER POST 12.6

CU
EA 0120R4

DISREGARD PRINTS BEARING EARLIER REVISION DATES

REVISION DATES (PRELIMINARY STAGE ONLY)

SHEET 106R2 OF 214

DESIGN DETAIL SHEET (METRIC) (REV. 3/1/93)
#DATE# #TIME# Pan Table File

ORIGINAL SCALE IN MILLIMETERS FOR REDUCED PLANS 0 10 20 30 40 50 60 70 80 90 100

FILE => p:\bb\04-012001\eti\revision-7_16_09\ckpejb02.dgn

100% PS&E

CONTRACT NO. 04-0120R4

CONTRACT CHANGE ORDER NO 174-S1

SHEET 3 OF 8

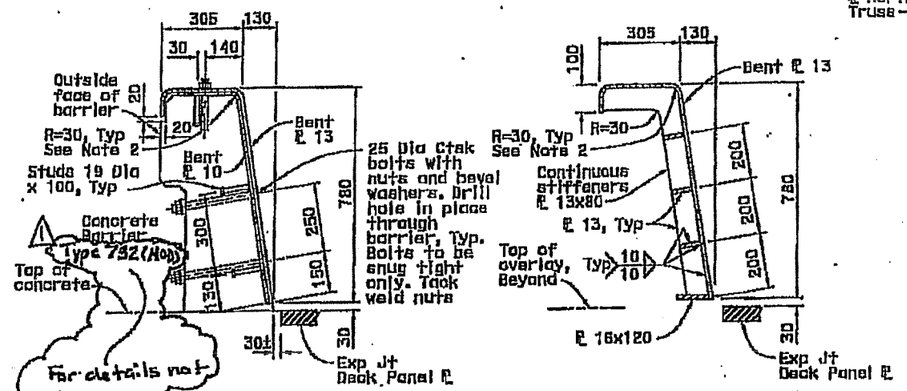

SECTION A-A

1:10

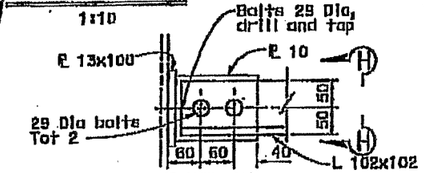

DETAIL 1

1:5

SECTION B-B

1:10

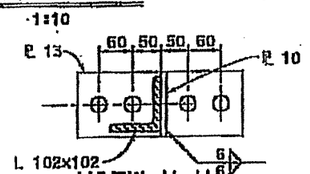

VIEW H-H

1:5

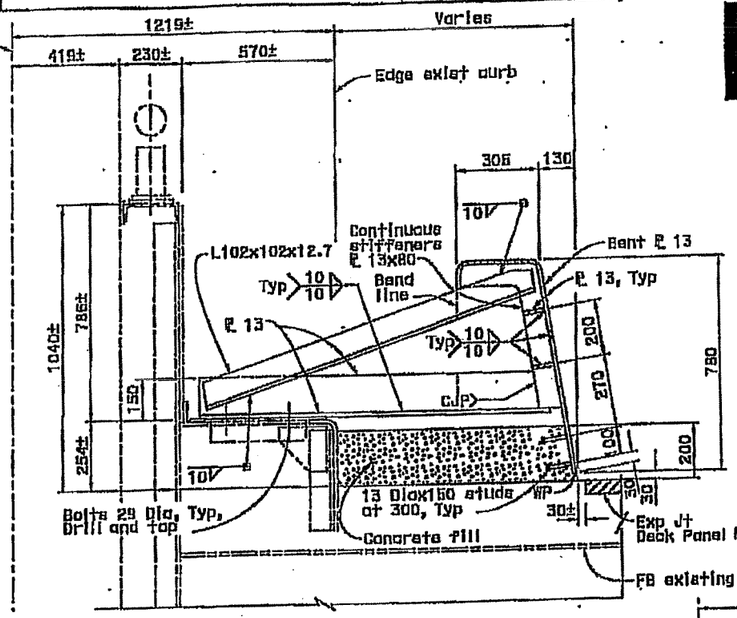

SECTION C-C

1:10

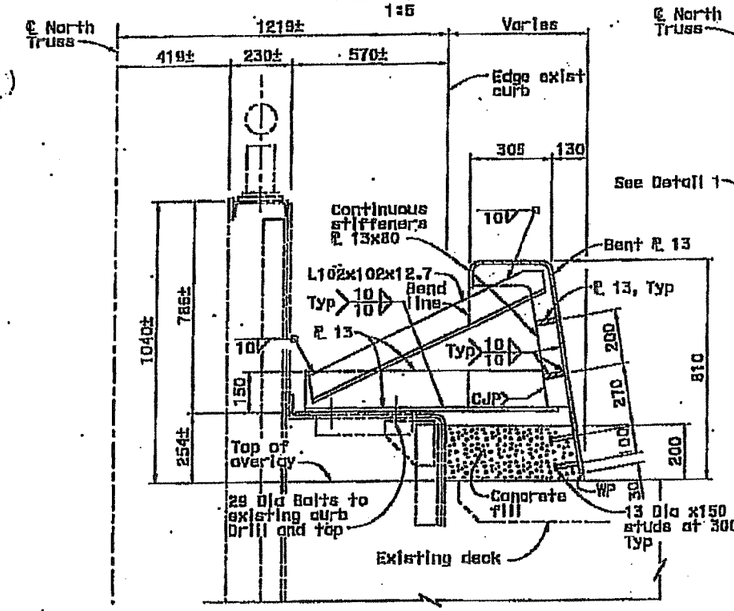

SECTION D-D

1:10

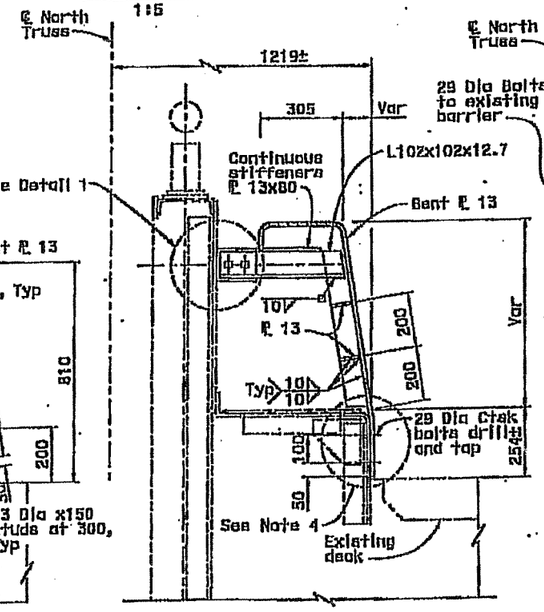

SECTION E-E

1:10

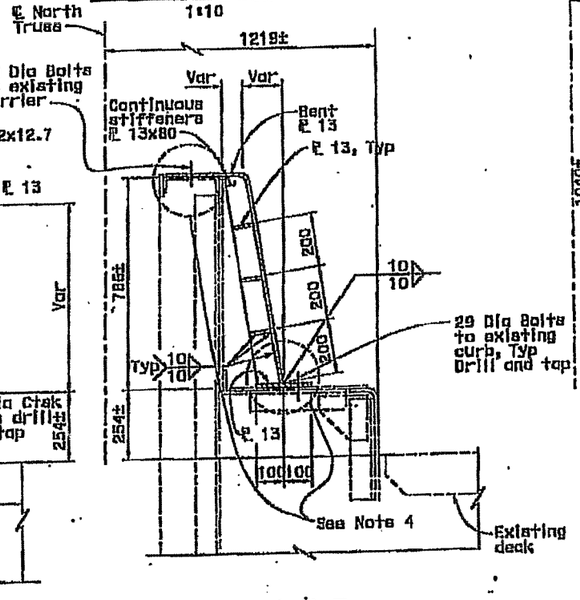

SECTION F-F

1:10

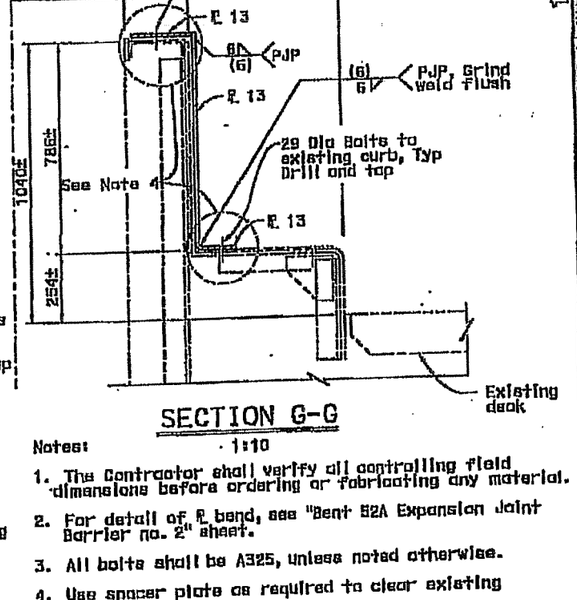

SECTION G-G

1:10

ALL DIMENSIONS ARE IN MILLIMETERS UNLESS OTHERWISE SHOWN

Notes:

1. The Contractor shall verify all controlling field dimensions before ordering or fabricating any material.
2. For detail of ℄ bend, see "Bent S2A Expansion Joint Barrier no. 2" sheet.
3. All bolts shall be A325, unless noted otherwise.
4. Use spacer plate as required to clear existing rivet heads.

LEGEND:

——— Indicates existing structure

⚠ 6/25/09 CONCRETE BARRIER REVISION

DIST	COUNTY	ROUTE	KILOMETER POST TOTAL PROJECT	SHEET NO	TOTAL
04	SF	80	12.6/13.2		

Caltrans Metric

REGISTERED CIVIL ENGINEER

10-01-08

PLANS APPROVAL DATE

REGISTERED PROFESSIONAL ENGINEER Charles Redfield No. C 27605 Exp. 12/31/09 CIVIL STATE OF CALIFORNIA

The State of California or its officers or agents shall not be responsible for the accuracy or completeness of electronic copies of this plan sheet.

T.Y. LIN / MOFFATT & NICHOL
Two Harrison Street, Suite 500
San Francisco, CA 94105

100% PS&E

CONTRACT CHANGE ORDER NO 174-S1

SHEET 4 OF 8

T. Ostrom/M. Whiteside/A. Akinsanya	DESIGN	BY C. Redfield, R. Nutt	CHECKED S. Chang
DESIGN OVERSIGHT	DETAILS	BY S. Lee, P. Zhao	CHECKED A. Lee
SIGN OFF DATE	QUANTITIES	BY H. Nelson	CHECKED A. Lee

DESIGN DETAIL SHEET CONTRACT REV. 7/2/10
DATE: 07/2010 FILE: Pen Table File

PREPARED FOR THE STATE OF CALIFORNIA DEPARTMENT OF TRANSPORTATION

ORIGINAL SCALE IN MILLIMETERS FOR REDUCED PLANS 0 10 20 30 40 50 60 70 80 90 100

H. Soh — PROJECT ENGINEER
S. Abbas — PROJECT MANAGER
CCI — EA 012014

BRIDGE NO. 34-0006 (TEMP)
KILOMETER POST 12.6

SAN FRANCISCO OAKLAND BAY BRIDGE
EAST SPAN SEISMIC SAFETY PROJECT

EAST TIE-IN

PIER E1 EXPANSION JOINT BARRIER NO. 3

DIRECTOR'S PERMIT NUMBER / EARLIER REVISION DATES —

REVISION DATES (PRELIMINARY STAGE ONLY)

SHEET 107 OF 214

DATE PLOTTED => 12/5/2009 TIME PLOTTED => 11:33:32 AM
FILE => p:\as04\pln\ea012014\tie\tie_pier_e1_barrier_3.dgn
LEGEND: 100% PS&E

R1

CONTRACT NO. 04-0120R4

CONTRACT CHANGE ORDER NO 174-S1

SHEET 5 OF 8

DIST	COUNTY	ROUTE	KILOMETER POST TOTAL PROJECT	SHEET No	TOTAL
04	SF	80	12.6/13.2		

Caltrans Metric

REGISTERED CIVIL ENGINEER

10-01-08

PLANS APPROVAL DATE

The State of California or its officers or agents shall not be responsible for the accuracy or completeness of electronic copies of this plan sheet.

REGISTERED PROFESSIONAL ENGINEER Charles Redfield No. C 27605 Exp. 12/31/09 CIVIL STATE OF CALIFORNIA

T.Y. LIN / MOFFATT & NICHOL
Two Harrison Street, Suite 500
San Francisco, CA 94105

MARK	DATE	DESCRIPTIONS	BY	CH'D	CCO#
1	7/16/09	CORRECTION PER MEETING WITH FABRICATOR	MCY	CR	

REVISIONS

CONTRACT CHANGE ORDER NO. ____
SHEET ____ OF ____

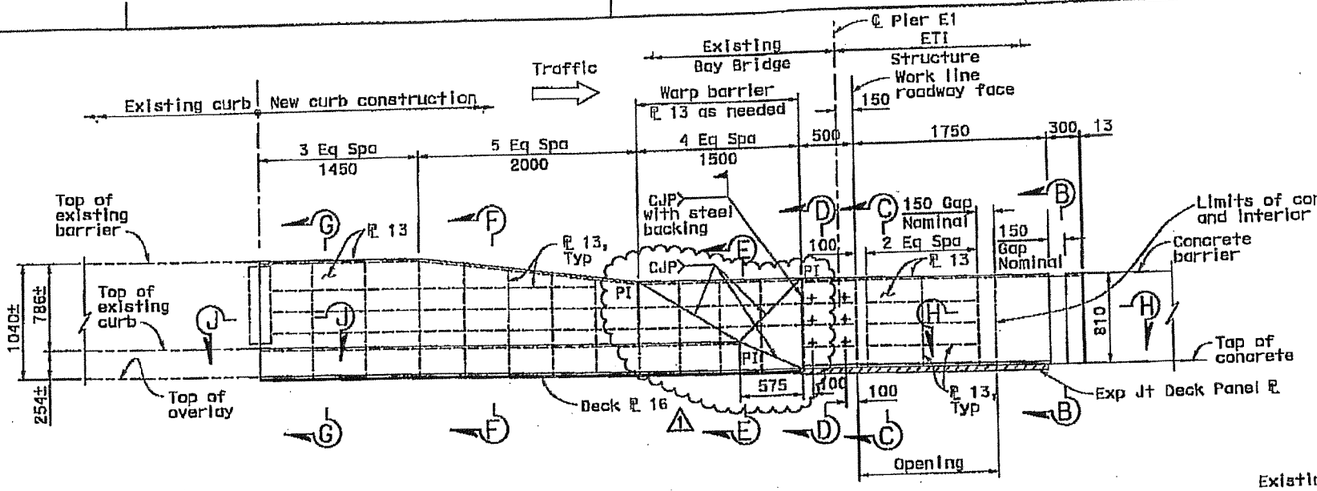

ELEVATION VIEW A-A
1:25

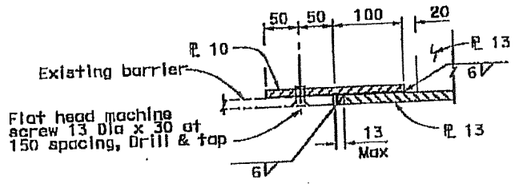

SECTION J-J
1:4
Section K-K Similar

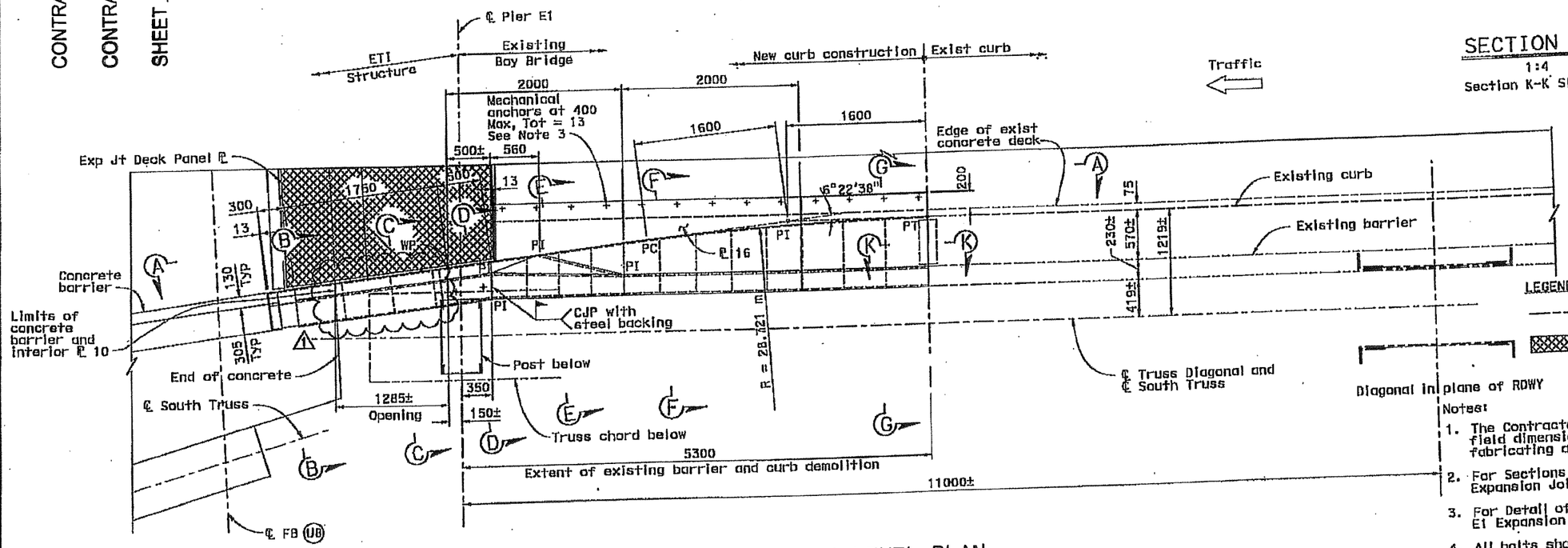

UPPER LEVEL PLAN
1:25

LEGEND:

- Indicates existing structure
- Indicates steel deck plate with V-grooves at ±45°

Notes:

1. The Contractor shall verify all controlling field dimensions before ordering or fabricating any material.
2. For Sections B-B through H-H, see "Pier E1 Expansion Joint Barrier No. 5" sheet.
3. For Detail of Mechanical Anchors see "Pier E1 Expansion Joint Barrier No.5" sheet.
4. All bolts shall be A325, unless noted otherwise.

ALL DIMENSIONS ARE IN MILLIMETERS UNLESS OTHERWISE SHOWN

SAN FRANCISCO OAKLAND BAY BRIDGE
EAST SPAN SEISMIC SAFETY PROJECT

EAST TIE-IN

PIER E1 EXPANSION JOINT BARRIER NO. 4

DESIGN	BY C. Redfield, R. Nutt	CHECKED S. Cheng	
DETAILS	BY S. Lee, P. Zhao	CHECKED A. Lee	
QUANTITIES	BY H. Nelson	CHECKED A. Lee	

PREPARED FOR THE STATE OF CALIFORNIA DEPARTMENT OF TRANSPORTATION

M. Soh
PROJECT ENGINEER
S. Abbas
PROJECT MANAGER

BRIDGE NO. 34-0006 (TEMP)
KILOMETER POST 12.6

CU
EA 0120R4

DISREGARD PRINTS BEARING EARLIER REVISION DATES

REVISION DATES (PRELIMINARY STAGE ONLY)

SHEET 108R1 OF 214

T. Ostrom/M. Whiteside/A. Akinsanya
DESIGN OVERSIGHT

SIGN OFF DATE

DESIGN DETAIL SHEET METRIC REV. 3/1/99
@DATE@ @TIME@ Pen Table File

ORIGINAL SCALE IN MILLIMETERS FOR REDUCED PLANS 0 10 20 30 40 50 60 70 80 90 100

FILE => p:\bb\04-0120R1\eti\revision-7_16_09\okpajb04.dgn

100% PS&E

USERNAME => p2hoo DATE PLOTTED => 7/15/2009 TIME PLOTTED => 2:35:11 PM FILE => p:\bb\04-0120R1\eti\revision-7_16_09\okpajb04.dgn

⚠ 6/25/09 CONCRETE BARRIER REVISION

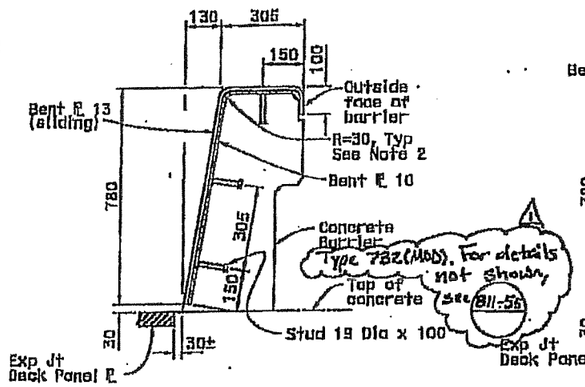

SECTION B-B
1:10

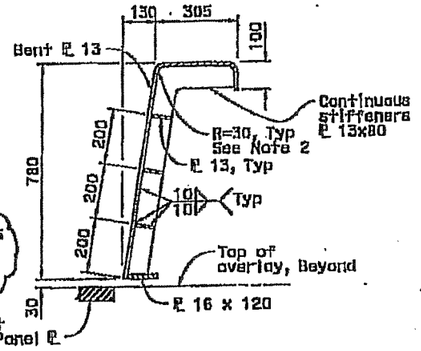

SECTION C-C
1:10

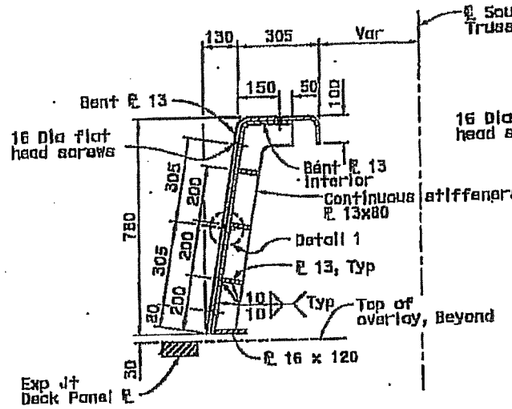

SECTION D-D
1:10

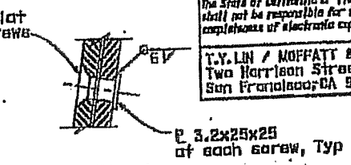

DETAIL 1
1:2

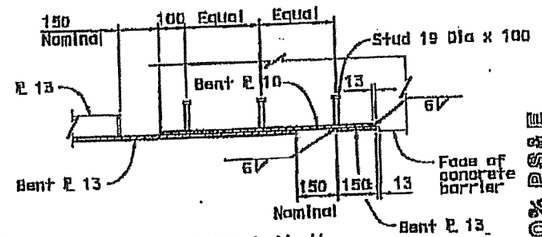

SECTION H-H
1:10

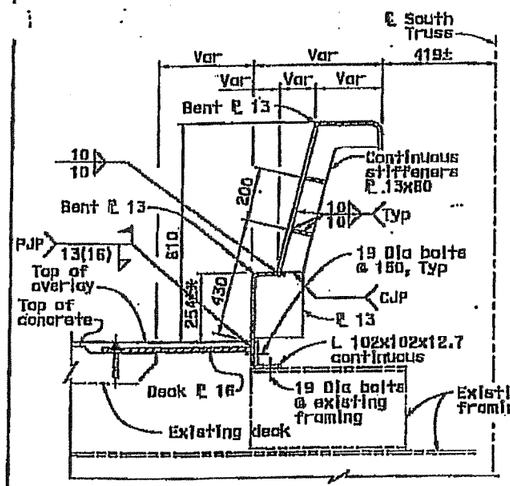

SECTION E-E
1:10

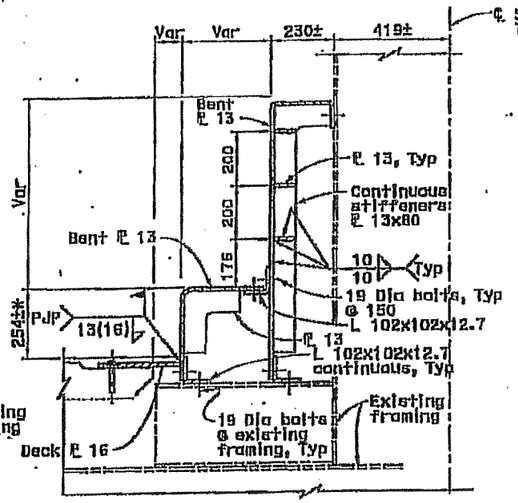

SECTION F-F
1:10

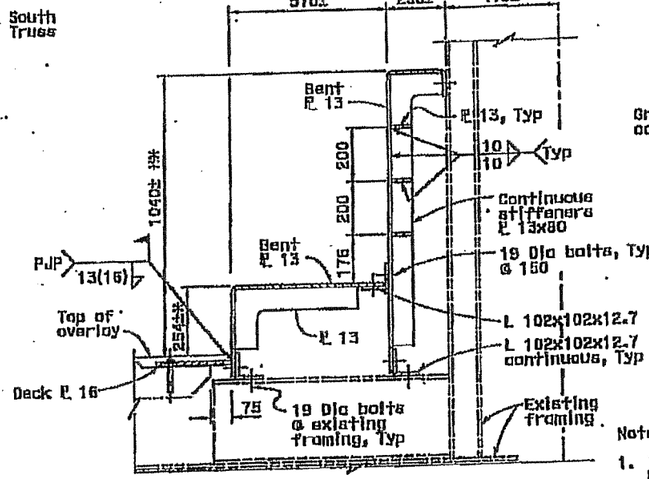

SECTION G-G
1:10

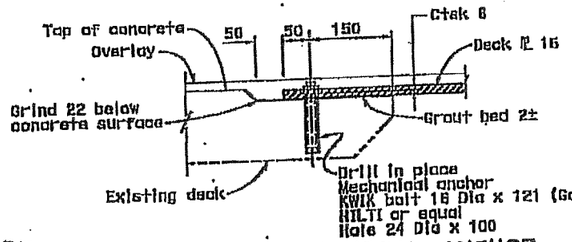

DETAIL OF MECHANICAL ANCHOR
1:5

LEGEND:

——— Indicates existing structure
* To match top of existing curb
** To match top of existing barrier

Notes:

1. The Contractor shall verify all controlling field dimensions before ordering or fabricating any material.
2. For detail of ℄ bend, see "Bent 52A Expansion Joint Barrier No. 2" sheet.
3. All bolts shall be A325, unless noted otherwise.
4. Use spacer plate as required to clear existing rivet heads.

DIST	COUNTY	ROUTE	KILOMETER POST TOTAL PROJECT	SHEET No.	TOTAL
04	SF	80	12.6/13.2		

Caltrans Metric

REGISTERED CIVIL ENGINEER

10-01-08
PLANS APPROVAL DATE

REGISTERED PROFESSIONAL ENGINEER Charles Redfield No. C 27605 Exp. 12/31/09 CIVIL STATE OF CALIFORNIA

The State of California or its officers or agents shall not be responsible for the accuracy or completeness of electronic copies of this plan sheet.

T.Y. LIN / MOFFATT & NICHOL
Two Harrison Street, Suite 500
San Francisco CA 94105

ALL DIMENSIONS ARE IN MILLIMETERS UNLESS OTHERWISE SHOWN

SAN FRANCISCO OAKLAND BAY BRIDGE
EAST SPAN SEISMIC SAFETY PROJECT

EAST TIE-IN

PIER E1 EXPANSION JOINT BARRIER NO. 5

T. Ostrom/M. Whitsalde/A. Akinaanya DESIGN OVERSIGHT	DESIGN	BY C. Redfield, R. Nutt	CHECKED S. Cheng
SIGN OFF DATE	DETAILS	BY S. Lee, P. Zhao	CHECKED A. Lee
	QUANTITIES	BY H. Nelson	CHECKED A. Lee

PREPARED FOR THE STATE OF CALIFORNIA DEPARTMENT OF TRANSPORTATION

M. Soh PROJECT ENGINEER
S. Abbas PROJECT MANAGER
CU EA 0120J4

BRIDGE NO. 34-0006 (TEMP)
KILOMETER POST 12.6

DESIGNED PRINTED DRAWN CHECKED REVISION DATES

REVISION DATES (PRELIMINARY STAGE ONLY)

SHEET 108 OF 214

DESIGN DETAIL SHEET DATED REV. 3/2/99
DGN/DATE: STEVE Pen Table File

ORIGINAL SCALE IN MILLIMETERS FOR REDUCED PLANS 0 10 20 30 40 50 60 70 80 90 100

CONTRACT CHANGE ORDER NO 174-S1

SHEET 12 OF 8

R1

100% PS&E

FILE => s:\projects\sas_seismic\sas_seismic.dgn
TIME PLOTTED => 11:13:38 AM
DATE PLOTTED => 12/5/2008
USERNAME => alee

CONTRACT NO. 04-0120R4

CONTRACT CHANGE ORDER NO 174-S1

SHEET 7 OF 8

DIST	COUNTY	ROUTE	KILOMETER POST TOTAL PROJECT	SHEET No	TOTAL
04	SF	80	12.6/13.2		

Caltrans Metric

REGISTERED CIVIL ENGINEER

10-01-08

PLANS APPROVAL DATE

The State of California or its officers or agents shall not be responsible for the accuracy or completeness of electronic copies of this plan sheet.

REGISTERED PROFESSIONAL ENGINEER Charles Redfield No. C 27605 Exp. 12/31/09 CIVIL STATE OF CALIFORNIA

T.Y. LIN / MOFFATT & NICHOL
Two Harrison Street, Suite 500
San Francisco, CA 94105

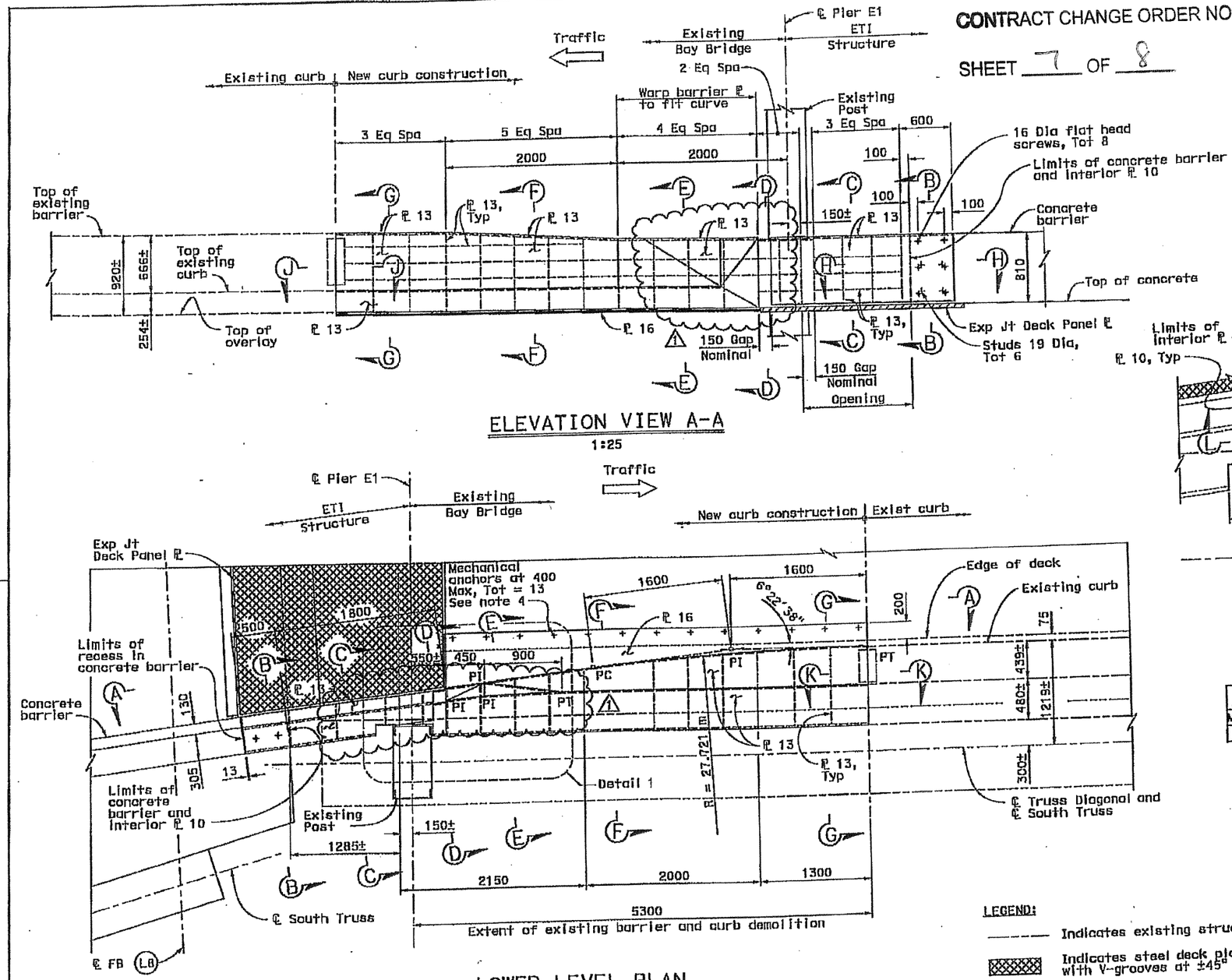

ELEVATION VIEW A-A

1:25

LOWER LEVEL PLAN

1:25

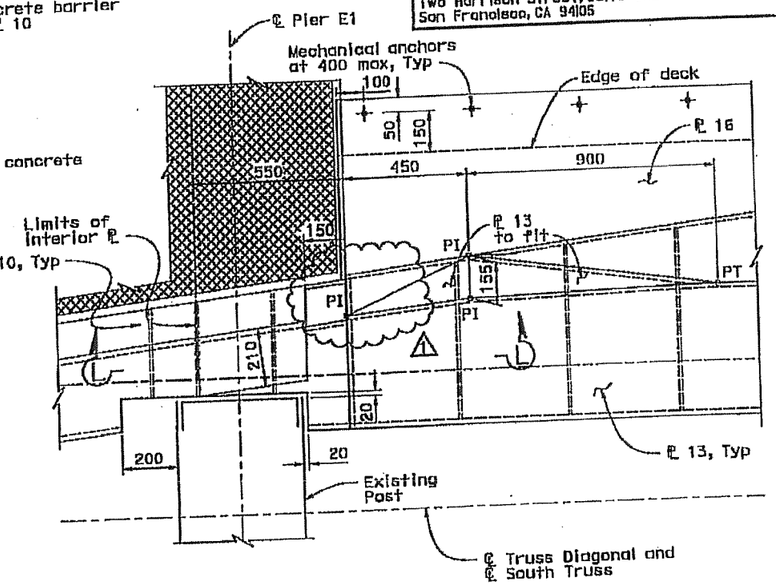

DETAIL 1

1:10

MARK	DATE	DESCRIPTIONS	BY	CH'D	CCO#
1	7/16/09	CORRECTION PER MEETING WITH FABRICATOR	MCY	CR	

REVISIONS

CONTRACT CHANGE ORDER NO. ____
SHEET ____ OF ____

Notes:

1. The Contractor shall verify all controlling field dimensions before ordering or fabricating any material.
2. For sections B-B through H-H and L-L, See "Pier E1 Expansion Joint Barrier No. 7" sheet.
3. For Sections J-J and K-K, See "Pier E1 Expansion Joint Barrier No. 4" sheet.
4. For detail of mechanical anchors see "Pier E1 Expansion Joint Barrier No. 5" sheet.
5. All bolts shall be A325, unless noted otherwise.

LEGEND:

- ------ Indicates existing structure
- Indicates steel deck plate with V-grooves at ±45°

ALL DIMENSIONS ARE IN MILLIMETERS UNLESS OTHERWISE SHOWN

SAN FRANCISCO OAKLAND BAY BRIDGE
EAST SPAN SEISMIC SAFETY PROJECT

EAST TIE-IN

PIER E1 EXPANSION JOINT BARRIER NO. 6

BRIDGE NO. 34-0006 (TEMP)
KILOMETER POST 12.6

T. Ostrom/M. Whiteside/A. Akinsanya
DESIGN OVERSIGHT

SIGN OFF DATE

DESIGN BY C. Redfield, R. Nutt — CHECKED S. Cheng
DETAILS BY S. Lee, P. Zhao — CHECKED A. Lee
QUANTITIES BY H. Nelson — CHECKED A. Lee

PREPARED FOR THE STATE OF CALIFORNIA DEPARTMENT OF TRANSPORTATION

M. Soh
PROJECT ENGINEER
S. Abbas
PROJECT MANAGER

CU
EA 0120R4

DISREGARD PRINTS BEARING EARLIER REVISION DATES

REVISION DATES (PRELIMINARY STAGE ONLY)

SHEET 110R1 OF 214

ORIGINAL SCALE IN MILLIMETERS FOR REDUCED PLANS 0 10 20 30 40 50 60 70 80 90 100

DESIGN DETAIL SHEET INSTRUCTION REV. 3/1/98
$DATE$ $TIME$ Pen Table File

FILE => p:\bb\04-0120R1\eti\revision-7_16_09\akpajb06.dgn

100% PS&E

FILE => p:\bb\04-0120R1\eti\revision-7_16_09\akpajb06.dgn
TIME PLOTTED => 2:35:13 PM
DATE PLOTTED => 7/16/2009
USERNAME => pzhao

⚠ 6/26/08 CONCRETE BARRIER REVISION

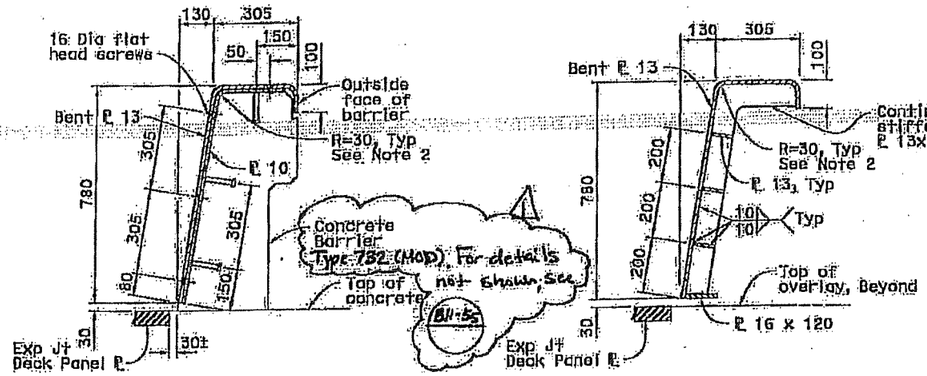

SECTION B-B
1:10

SECTION C-C
1:10

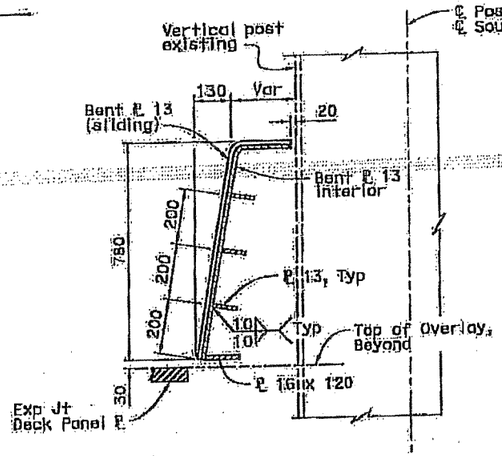

SECTION D-D
1:10

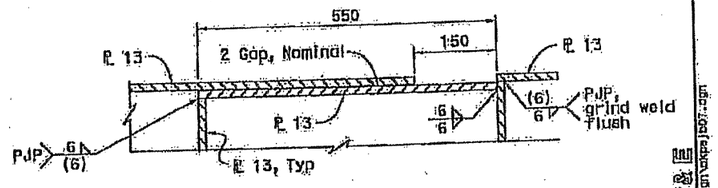

SECTION L-L
1:5

Caltrans District 04

DIST	COUNTY	ROUTE	KILOMETER POST TOTAL PROJECT	SHEET No	TOTAL
04	SF	80	12.6/13.2		

REGISTERED CIVIL ENGINEER

10-01-08
PLANS APPROVAL DATE

The State of California or the officers or agents shall not be responsible for the accuracy or completeness of electronic copies of this plan sheet.

REGISTERED PROFESSIONAL ENGINEER Charles Redfield No. C 27605 Exp. 12/31/09 CIVIL STATE OF CALIFORNIA

T.Y. LIN / MOFFATT & NICHOL
Two Harrison Street, Suite 500
San Francisco, CA. 94105

CONTRACT NO. 04-0120R4

CONTRACT CHANGE ORDER NO 174-S1

SHEET 8 OF 8

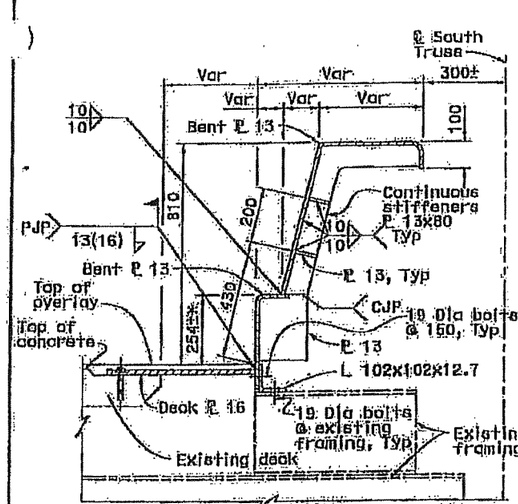

SECTION E-E
1:10

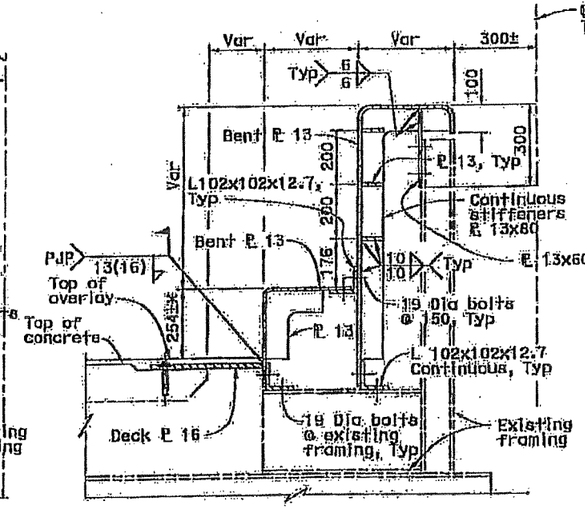

SECTION F-F
1:10

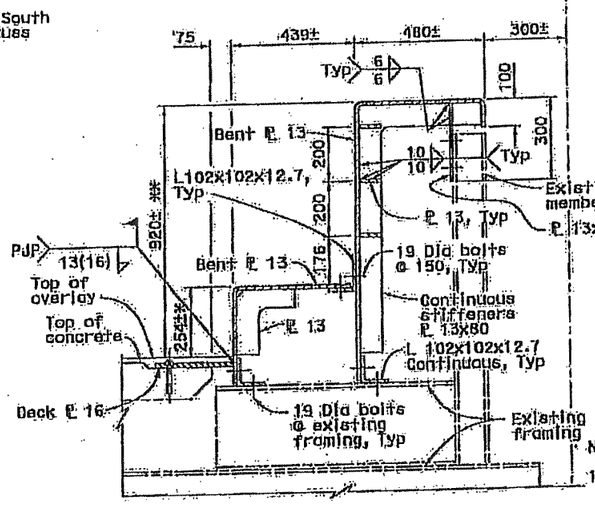

SECTION G-G
1:10

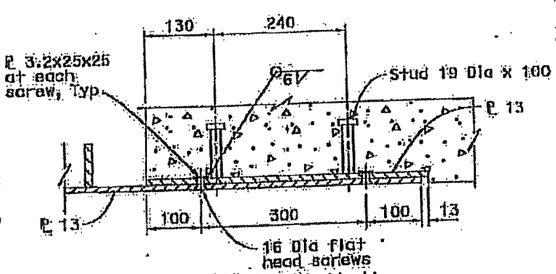

SECTION H-H
1:5

LEGEND:

——— Indicates existing structure

* To match top of existing curb

** To match top of existing barrier

Notes:

1. The Contractor shall verify all controlling field dimensions before ordering or fabricating any material.
2. For detail of ℄ bend, see "Bent 52A Expansion Joint Barrier No. 2" sheet.
3. All bolts shall be A325, unless noted otherwise.
4. Use spacer plate as required to clear existing rivet heads.

ALL DIMENSIONS ARE IN MILLIMETERS UNLESS OTHERWISE SHOWN

SAN FRANCISCO OAKLAND BAY BRIDGE
EAST SPAN SEISMIC SAFETY PROJECT

EAST TIE-IN

PIER E1 EXPANSION JOINT BARRIER NO. 7

DESIGN	BY C. Redfield, R. Nutt	CHECKED S. Cheng	PREPARED FOR THE STATE OF CALIFORNIA DEPARTMENT OF TRANSPORTATION
DETAILS	BY S. Lee, P. Zhao	CHECKED A. Lee	
QUANTITIES	BY H. Nafeah	CHECKED A. Lee	

T. Ostrom/M. Whiteside/A. Akinsanya
DESIGN OVERSIGHT

M. Soh
PROJECT ENGINEER
S. Abbas
PROJECT MANAGER

CU
EA 0120R4

BRIDGE NO. 34-0006 (TEMP)
KILOMETER POST 12.6

SIGH OFF DATE

DESIGN DETAIL SHEET DATE(REV. 3/1/99)
DATE: STATE: Pen Table File

ORIGINAL SCALE IN MILLIMETERS FOR REDUCED PLANS 0 10 20 30 40 50 60 70 80 90 100

DISREGARD PRINTS BEARING EARLIER REVISION DATES

REVISION DATES (PRELIMINARY STAGE ONLY)

SHEET 111 OF 214

R1

100% PS&E

FILE => [illegible]
TIME PLOTTED => 11:33:44 AM
DATE PLOTTED => 12/5/2008
USERNAME => Alan

STATE OF CALIFORNIA - DEPARTMENT OF TRANSPORTATION

CONTRACT CHANGE ORDER

Change Requested by: Engineer

CCO 174	Suppl. No. 2	Contract No. 04 - 0120R4	Road SF-80-12.6/13.2	FED. AID LOC.:

To: CC MYERS INC

You are directed to make the following changes from the plans and specifications or do the following described work not included in the plans and specifications for this contract. ***NOTE: This change order is not effective until approved by the Engineer.***

Description of work to be done, estimate of quantities and prices to be paid. (Segregate between additional work at contract price, agreed price and force account.) Unless otherwise stated, rates for rental of equipment cover only such time as equipment is actually used and no allowance will be made for idle time. This last percentage shown is the net accumulated increase or decrease from the original quantity in the Engineer's Estimate.

Extra Work at Force Account:

Provide additional funds.

Estimated cost of Extra Work at Force Account $150,000.00

RECEIVED
011551 FEB-3 10

Estimated Cost: Increase ☑ Decrease ☐ **$150,000.00**

By reason of this order the time of completion will be adjusted as follows: 0 days

Submitted by

Signature	Resident Engineer	Date
[signature]	BILL CASEY	10-3-09

Approval Recommended by

Signature	Area Construction Manager	Date
Deanna Vilcheck	DEANNA VILCHECK	10/7/09

Engineer Approval by

Signature	Area Construction Manager	Date
Deanna Vilcheck	DEANNA VILCHECK	11/9/09

We the undersigned contractor, have given careful consideration to the change proposed and agree, if this proposal is approved, that we will provide all equipment, furnish the materials, except as may otherwise be noted above, and perform all services necessary for the work above specified, and will accept as full payment therefor the prices shown above.

NOTE: If you, the contractor, do not sign acceptance of this order, your attention is directed to the requirements of the specifications as to proceeding with the ordered work and filing a written protest within the time therein specified.

Contractor Acceptance by

Signature	(Print name and title)	Date
N/A	N/A	N/A

STATE OF CALIFORNIA - DEPARTMENT OF TRANSPORTATION

CONTRACT CHANGE ORDER MEMORANDUM

DATE: 9/22/2009

TO: MIKE FORNER / DEANNA VILCHECK	FILE: E.A. 04 - 0120R4
	CO-RTE-PM SF-80-12.6/13.2
FROM: BILL CASEY	FED. NO.
CCO#: **174** SUPPLEMENT#: **2** Category Code: **CHPT**	CONTINGENCY BALANCE (incl. this change) **$48,439,687.59**
COST: **$150,000.00** INCREASE ☑ DECREASE ☐	HEADQUARTERS APPROVAL REQUIRED? ☑ YES ☐ NO
SUPPLEMENTAL FUNDS PROVIDED: **$0.00**	IS THIS REQUEST IN ACCORDANCE WITH ENVIRONMENTAL DOCUMENTS? ☑ YES ☐ NO
CCO DESCRIPTION: Fabrication Costs Addt'l Funds Request	**PROJECT DESCRIPTION:** CONSTRUCT ROUTE 80 TEMP BYPASS STRUCTURE

Original Contract Time:	Time Adj. This Change:	Previously Approved CCO Time Adjustments:	Percentage Time Adjusted: (including this change)	Total # of Unreconciled Deferred Time CCO(s): (including this change)
475 Day(s)	**0** Day(s)	**1195** Day(s)	**252** %	**8**

THIS CHANGE ORDER PROVIDES FOR:

Additional funds.

This project, the Temporary Bypass Structure (TBS), was awarded in March 2004 to construct a detour that will allow for the tie in of the new east span of the San Francisco Oakland Bay Bridge to Yerba Buena Island. The TBS encompasses three main structures, the East Tie-In to the existing bridge, the West Tie-In (WTI) to Yerba Buena Island, and the Viaduct structure between the two tie ins.

A December 14, 2006 Department strategy memorandum, approved by Tony Anziano, Toll Bridge Program Manager, and Richard Land, Chief Engineer, recommended that the Department assume the design responsibility for the East Tie-In (ETI) structure. Based on this memorandum, the design of the structure was changed from a design that incorporated the existing steel truss bridge with the new structure to a design that replaces the existing structure with a new structure (roll out / roll in).

The original contract change calls for compensating the Contractor for all costs associated with furnishing, fabricating, coating and delivering four (4) expansion joints barrier plates for Bent 52A and four (4) expansion joint barrier plates for Pier E-1. This change order is necessary due to expedited fabrication costs incurred in order to meet the 2009 Labor Day Weekend Roll In and to pay all outstanding bills in the holding file.

The Contractor shall be compensated under Extra Work at Force Account with an estimated cost of $150,000.00, which can be financed on the contract's contingency fund, bringing the total cost to be $500,000.00.

The Contractor's signature is not required for additional funds for Extra Work at Force Account change orders, therefore, this change order is being issued unilaterally.

No adjustment of contract time is warranted as this change will not affect the controlling operation.

This change was concurred with by Alec Melkonians - Asst. Project Manager and Hong Wong - Project Engineer,

ADA Notice For individuals with sensory disabilities, this document is available in alternate formats. For information call: (916) 654-6410 or TDD (916) 654-3880

CONTRACT CHANGE ORDER MEMORANDUM

CONCURRED BY:			
Construction Engineer:	Bill Casey, Resident Engineer	Date	10-3-09
Bridge Engineer:		Date	
Project Engineer:	Hong Wong, PE	Date	9/22/09
Project Manager:	Alec Melkonians	Date	9/22/09
FHWA Rep.:		Date	
Environmental:		Date	
Other (specify):		Date	
Other (specify):		Date	
District Prior Approval By:		Date	
HQ (Issue Approve) By:	Bob Molera, HQ CCO Engineer	Date	11-5-09
Resident Engineer's Signature:		Date	10-3-09

ESTIMATE OF COST

	THIS REQUEST	TOTAL TO DATE
ITEMS	$0.00	$0.00
FORCE ACCOUNT	$150,000.00	$500,000.00
AGREED PRICE	$0.00	$0.00
ADJUSTMENT	$0.00	$0.00
TOTAL	$150,000.00	$500,000.00

FEDERAL PARTICIPATION

☐ PARTICIPATING ☐ PARTICIPATING IN PART ☑ NONE
☐ NON-PARTICIPATING (MAINTENANCE) ☐ NON-PARTICIPATING

FEDERAL SEGREGATION (if more than one Funding Source or P.I.P. type)
☐ CCO FUNDED PER CONTRACT ☐ CCO FUNDED AS FOLLOWS

FEDERAL FUNDING SOURCE	PERCENT

CONTRACT CHANGE ORDER

Change Requested by: Engineer

CCO 175	Suppl. No. 0	Contract No. 04 - 0120R4	Road SF-80-12.6/13.2	FED. AID LOC.: ACBRIM-080-1(097)N

To: **CC MYERS INC**

You are directed to make the following changes from the plans and specifications or do the following described work not included in the plans and specifications for this contract. ***NOTE: This change order is not effective until approved by the Engineer.***

Description of work to be done, estimate of quantities and prices to be paid. (Segregate between additional work at contract price, agreed price and force account.) Unless otherwise stated, rates for rental of equipment cover only such time as equipment is actually used and no allowance will be made for idle time. This last percentage shown is the net accumulated increase or decrease from the original quantity in the Engineer's Estimate.

Extra Work at Lump Sum:

Perform the retrofit work for the steel truss modifications at existing Pier YB3 in accordance with Plan Sheets No. 2 through 3 and 10 through 13 of Contract Change Order No. 160.

Work includes: all necessary layout; unloading and handling material at the site; removal of existing rivets, nuts and bolts as required; steel drilling and reaming including cutting slots to allow passage of high strength rods; steel erection and installation; bolt and rod installation; bolt testing and inspection, field welding and welding inspection;

Flagging costs associated with this work shall be paid under Change Order No. 1 with these costs being paid at 50% by the Department. The remaining flagging costs are considered to be included in the lump sum payment made under this change order.

The compensation provided under this change order is based on the work being done on a 10-hour day, 6 days per week schedule in an effort to support the placement of traffic on the Temporary Bypass Structure by September 8, 2009.

For this work, the Contractor will be compensated a lump sum of $311,144.00. This sum constitutes full and final compensation for all costs, including all markups, for the work specified herein.

Compensation for the following items of work pertaining to the erection of the ETI existing steel truss reinforcement have not been addressed by this change order:

1. Fabrication and delivery to the jobsite of all permanent materials to be incorporated into the work.
2. Providing access or access platform for the work at Pier YB3.
3. Work to be done on the roll out / roll in weekend including installing wedge shim plates, tensioning wedge bolts, tensioning high strength rods.
4. Costs associated with any work at Span YB4 or at Pier YB1.
5. Costs associated with lead abatement; touchup or finish painting.

Compensation for the 5 items of work specified above shall be paid under separate change orders.

Total Cost of Extra Work at Lump Sum $311,144.00

CONTRACT CHANGE ORDER

Change Requested by: Engineer

CCO 175	Suppl. No. 0	Contract No. 04 - 0120R4	Road SF-80-12.6/13.2	FED. AID LOC.: ACBRIM-080-1(097)N

Estimated Cost: Increase ☑ Decrease ☐ **$311,144.00**

By reason of this order the time of completion will be adjusted as follows: Deferred

Submitted by

Signature	Resident Engineer	Date
	BILL CASEY	7-18-09

Approval Recommended by

Signature	Area Construction Manager	Date
Deanna Vilcheck	DEANNA VILCHECK	7/21/09

Engineer Approval by

Signature	Area Construction Manager	Date
Deanna Vilcheck	DEANNA VILCHECK	8/13/09

We the undersigned contractor, have given careful consideration to the change proposed and agree, if this proposal is approved, that we will provide all equipment, furnish the materials, except as may otherwise be noted above, and perform all services necessary for the work above specified, and will accept as full payment therefor the prices shown above.

NOTE: If you, the contractor, do not sign acceptance of this order, your attention is directed to the requirements of the specifications as to proceeding with the ordered work and filing a written protest within the time therein specified.

Contractor Acceptance by

Signature	(Print name and title)	Date
	DANIEL E. HIMICK, PRESIDENT	8/11/09

STATE OF CALIFORNIA - DEPARTMENT OF TRANSPORTATION

CONTRACT CHANGE ORDER MEMORANDUM

DATE: 2/9/2009

TO: MIKE FORNER / DEANNA VILCHECK	FILE: **E.A.** 04 - 0120R4
FROM: BILL CASEY	**CO-RTE-PM** SF-80-12.6/13.2
	FED. NO. ACBRIM-080-1(097)N
CCO#: **175** SUPPLEMENT#: **0** Category Code: **CHPA**	CONTINGENCY BALANCE (incl. this change) **$33,955,101.59**
COST: **$311,144.00** INCREASE ☑ DECREASE ☐	HEADQUARTERS APPROVAL REQUIRED? ☑ YES ☐ NO
SUPPLEMENTAL FUNDS PROVIDED: **$0.00**	IS THIS REQUEST IN ACCORDANCE WITH ENVIRONMENTAL DOCUMENTS? ☑ YES ☐ NO
CCO DESCRIPTION: ETI Pier YB3 Steel Retrofit- Erection	**PROJECT DESCRIPTION:** CONSTRUCT ROUTE 80 TEMP BYPASS STRUCTURE

Original Contract Time:	Time Adj. This Change:	Previously Approved CCO Time Adjustments:	Percentage Time Adjusted: (including this change)	Total # of Unreconciled Deferred Time CCO(s): (including this change)
475 Day(s)	**DEF** Day(s)	**1195** Day(s)	**252** %	**8**

THIS CHANGE ORDER PROVIDES FOR:

Compensating the Contractor for erection of structural steel materials required to reinforce the existing truss at Pier YB3 for the East Tie-In (ETI) structure.

This project, the Yerba Buena Island Detour (YBID), was awarded in March 2004 to construct a detour that will allow for the tie in of the new east span of the San Francisco Oakland Bay Bridge to Yerba Buena Island. The YBID encompasses three main structures, the East Tie-In to the existing bridge, the West Tie-In (WTI) to Yerba Buena Island, and the Viaduct structure between the two tie ins.

The Department issued a December 14, 2006 memo entitled Strategy for South-South Detour Contract Completion which was approved by Tony Anziano (Toll Bridge Program Manager), Richard Land (Chief Engineer) and subsequently by the TBPOC. This memo recommended that the design of the ETI structure be assumed by the Department as opposed to the as-bid performance based contractor design. Based on this memorandum, the design of the structure was changed from a design that incorporated the existing steel truss bridge with the new structure to a design that replaces the existing structure with a new structure (roll out / roll in).

In January 2009, Toll Bridge Design provided design drawings to provide additional stability to existing spans YB1, YB2, YB3, and YB4 to permit the planned roll out during the Labor Day traffic switch to the YBID. Contract Change Order No. 160 was issued to provide compensation for the fabrication and delivery of the material. Contract Change Order No. 93 - Supplement No.1 was issued to provide compensation for the lead paint abatement for this work. Contract Change Order Nos. 170 and 204 will be issued to provide compensation for the field erection at Span YB4 and Pier YB1. This change order will provide compensation to the Contractor for the field erection required at Pier YB3.

Compensation for this change shall be for an agreed lump sum cost of $311,144.00 which will be financed through the contingency fund. A cost analysis is in the project files.

Adjustment of contract time is deferred pending completion of the work specified in this change as it may become the controlling operation in accordance with Section 8-1.07 "Liquidated Damages" of the Standard Specifications and Section 10-1.20 "time Related Overhead (TRO)" of the Special Provisions.

Compensation for delays resulting from this work will be made in accordance with Section 8-1.09 "Right of Way Delays" of the Standard Specifications and Section 10-1.20 "Time Related Overhead" of the Special Provisions.

This change was requested by Mike Whiteside - YBI Coordination Engineer per memorandum dated December 9, 2008 and concurred with by Alec Melkonians - Asst. Project Manager and Hong Wong - Project Engineer.

Maintenance concurrence is not required, as this work does not affect any permanent roadway features.

ADA Notice: For individuals with sensory disabilities, this document is available in alternate formats. For information call: (916) 654-6410 or TDD (916) 654-3880 or write Records and Forms Management, 1120 N Street, MS-89, Sacramento, CA 95814.

CONCURRED BY:		
Construction Engineer:	Bill Casey, Resident Engineer	Date 7-18-09
Bridge Engineer:	Mike Whiteside, Toll Bridge Design	Date 1/22/09
Project Engineer:	Hong Wong, PE	Date 7/13/09
Project Manager:	Alec Melkonians	Date 7/8/09
FHWA Rep.:		Date
Environmental:		Date
Other (specify):		Date
Other (specify):		Date
District Prior Approval By:		Date
HQ (Issue Approve) By:	Bob Molera, HQ CCO Engineer	Date
Resident Engineer's Signature:		Date 7-18-09

ESTIMATE OF COST

	THIS REQUEST	TOTAL TO DATE
ITEMS	$0.00	$0.00
FORCE ACCOUNT	$0.00	$0.00
AGREED PRICE	$311,144.00	$311,144.00
ADJUSTMENT	$0.00	$0.00
TOTAL	$311,144.00	$311,144.00

FEDERAL PARTICIPATION

☐ PARTICIPATING ☐ PARTICIPATING IN PART ☑ NONE
☐ NON-PARTICIPATING (MAINTENANCE) ☐ NON-PARTICIPATING

FEDERAL SEGREGATION (if more than one Funding Source or P.I.P. type)
☐ CCO FUNDED PER CONTRACT ☐ CCO FUNDED AS FOLLOWS

FEDERAL FUNDING SOURCE	PERCENT

ADA Notice: For individuals with sensory disabilities, this document is available in alternate formats. For information call: (916) 654-6410 or TDD (916) 654-3880 or write Records and Forms Management, 1120 N Street, MS-89, Sacramento, CA 95814.

STATE OF CALIFORNIA - DEPARTMENT OF TRANSPORTATION

CONTRACT CHANGE ORDER

Change Requested by: Engineer

CCO 176	Suppl. No. 0	Contract No. 04 - 0120R4	Road SF-80-12.6/13.2	FED. AID LOC.: ACBRIM-080-1(097)N

To: **CC MYERS INC**

You are directed to make the following changes from the plans and specifications or do the following described work not included in the plans and specifications for this contract. ***NOTE: This change order is not effective until approved by the Engineer.***

Description of work to be done, estimate of quantities and prices to be paid. (Segregate between additional work at contract price, agreed price and force account.) Unless otherwise stated, rates for rental of equipment cover only such time as equipment is actually used and no allowance will be made for idle time. This last percentage shown is the net accumulated increase or decrease from the original quantity in the Engineer's Estimate.

Extra Work at Force Account:

Provide construction staking services as authorized by the Engineer. Compensation for this work will be paid for as extra work as provided for in Section 5-1.24 'Force Account Payment' of the Special Provisions, and Section 4-1.03D 'Extra Work' of the Standard Specifications.

Estimated Cost of Extra Work at Force Account $100,000.00

Estimated Cost: Increase ☑ Decrease ☐ **$100,000.00**

By **reason of this order the time of completion will be adjusted as follows:** 0 days

Submitted by

Signature	Resident Engineer	Date
	BILL CASEY	2-24-09

Approval Recommended by

Signature	Area Construction Manager	Date
Deanna Vilcheck	DEANNA VILCHECK	2/25/09

Engineer Approval by

Signature	Area Construction Manager	Date
Deanna Vilcheck	DEANNA VILCHECK	4/8/09

We the undersigned contractor, have given careful consideration to the change proposed and agree, if this proposal is approved, that we will provide all equipment, furnish the materials, except as may otherwise be noted above, and perform all services necessary for the work above specified, and will accept as full payment therefor the prices shown above.

NOTE: If you, the contractor, do not sign acceptance of this order, your attention is directed to the requirements of the specifications as to proceeding with the ordered work and filing a written protest within the time therein specified.

Contractor Acceptance by

Signature	(Print name and title)	Date
	STEVE FRANCIS, CHIEF ESTIMATOR	3-6-09

STATE OF CALIFORNIA - DEPARTMENT OF TRANSPORTATION

CONTRACT CHANGE ORDER MEMORANDUM

DATE: 2/9/2009 Page 1 of 1

TO: MIKE FORNER / DEANNA VILCHECK	FILE: E.A. 04 - 0120R4
	CO-RTE-PM SF-80-12.6/13.2
FROM: BILL CASEY	FED. NO. ACBRIM-080-1(097)N
CCO#: 176 SUPPLEMENT#: 0 Category Code: CGGA	CONTINGENCY BALANCE (incl. this change) $71,429,382.05
COST: $100,000.00 INCREASE ☑ DECREASE ☐	HEADQUARTERS APPROVAL REQUIRED? ☐ YES ☑ NO
SUPPLEMENTAL FUNDS PROVIDED: $0.00	IS THIS REQUEST IN ACCORDANCE WITH ENVIRONMENTAL DOCUMENTS? ☑ YES ☐ NO
CCO DESCRIPTION: Construction Staking	**PROJECT DESCRIPTION:** CONSTRUCT ROUTE 80 TEMP BYPASS STRUCTURE

Original Contract Time:	Time Adj. This Change:	Previously Approved CCO Time Adjustments:	Percentage Time Adjusted: (including this change)	Total # of Unreconciled Deferred Time CCO(s): (including this change)
475 Day(s)	0 Day(s)	1195 Day(s)	252 %	7

THIS CHANGE ORDER PROVIDES FOR:

This change compensates the contractor for all costs involved in providing construction staking services as authorized by the Engineer.

This project, the Temporary Bypass Structure (TBS), was awarded in March 2004 to construct a detour that will allow for the tie in of the new east span of the San Francisco Oakland Bay Bridge to Yerba Buena Island. The TBS encompasses three main structures, the East Tie-In to the existing bridge, the West Tie-In (WTI) to Yerba Buena Island, and the Viaduct structure between the two tie ins.

This change is necessary in order mitigate potential delays and/or decrease overall activity duration by augmenting existing State surveying resources at critical junctions.

This work will be paid for as Extra Work at Force for an estimated cost of $100,000 which can be funded through the available contingency balance.

Maintenance concurrence is not required as this change order doesn't affect any permanent roadway features.

Alec Melkonians - Asst. Project Manager, Toll Bridge Program and Hong Wong - Project Engineer concurred with this change.

CONCURRED BY:		
Construction Engineer:	Bill Casey	Date 2-24-09
Bridge Engineer:		Date
Project Engineer:	Hong Wong, PE	Date 2/22/09
Project Manager:	Alec Melkonians	Date 2/23/09
FHWA Rep.:		Date
Environmental:		Date
Other (specify):		Date
Other (specify):		Date
District Prior Approval By:		Date
HQ (Issue Approve) By:		Date
Resident Engineer's Signature:		Date
		2-24-09

ESTIMATE OF COST

	THIS REQUEST	TOTAL TO DATE
ITEMS	$0.00	$0.00
FORCE ACCOUNT	$100,000.00	$100,000.00
AGREED PRICE	$0.00	$0.00
ADJUSTMENT	$0.00	$0.00
TOTAL	$100,000.00	$100,000.00

FEDERAL PARTICIPATION

☐ PARTICIPATING ☐ PARTICIPATING IN PART ☑ NONE
☐ NON-PARTICIPATING (MAINTENANCE) ☐ NON-PARTICIPATING

FEDERAL SEGREGATION (if more than one Funding Source or P.I.P. type)
☐ CCO FUNDED PER CONTRACT ☐ CCO FUNDED AS FOLLOWS

FEDERAL FUNDING SOURCE	PERCENT

ADA Notice: For individuals with sensory disabilities, this document is available in alternate formats. For information call: (916) 654-6410 or TDD (916) 654-3880 or write Records and Forms Management, 1120 N Street, MS-89, Sacramento, CA 95814.

CONTRACT CHANGE ORDER

Change Requested by: Engineer

CCO 177	Suppl. No. 0	Contract No. 04 - 0120R4	Road SF-80-12.6/13.2	FED. AID LOC.: ACBRIM-080-1(097)N

To: **CC MYERS INC**

You are directed to make the following changes from the plans and specifications or do the following described work not included in the plans and specifications for this contract. ***NOTE: This change order is not effective until approved by the Engineer.***

Description of work to be done, estimate of quantities and prices to be paid. (Segregate between additional work at contract price, agreed price and force account.) Unless otherwise stated, rates for rental of equipment cover only such time as equipment is actually used and no allowance will be made for idle time. This last percentage shown is the net accumulated increase or decrease from the original quantity in the Engineer's Estimate.

Eliminate the bridge removal of the existing Route 80 steel truss span YB4 (Bridge No. 33-0025), between Pier YB-4 and Pier E-1, and portions of Pier E-1 as originally contemplated and bid by the Contractor.

Estimate of Decrease in Contract Item at Contract Price:

Item No. 42: BRIDGE REMOVAL (PORTION) LOCATION B
-1 LS (-100.00%) 1,460,000.00 /LS = -$1,460,000.00 (-100.00%)

In accordance with Section 4-1.03B(3), "Eliminated Items," of the Standard Specifications, the adjustment due to the elimination of Item No. 42 Bridge Removal (Portion), Location B, is zero.

Total Cost for Decrease in Contract Item.....($1,460,000.00)

RECEIVED
01 552 FEB 3 10

Extra Work at Lump Sum:

Perform all work as specified within this change order pertaining to the demolition of the Span YB4 steel truss of the existing structure (Bridge No. 33-0025) after the span has been rolled out and replaced by the Temporary Bypass Structure (Bridge No. 34-0006 (TEMP)).

Compensation paid under this change order includes but is not limited to all costs associated with the following 6 items of work:

1) Performing the lowering of the Span YB4 truss including furnishing, installing, and removing all equipment and material necessary to perform the lowering of the truss in accordance with the plans submitted (Document No: 215-SUB.00378-00) by Mammoet USA Inc. including any subsequent revisions to this plan as required for approval by the Engineer. This work includes but is not limited to furnishing and installing the gantry system including all strand jacks; all lifting towers; all foundations; all lifting beams, strandjack beams, gantry beams and cross beams; all bracing; all mid-span frames and all appurtenances.

2) Performing the transport of Bent 1 and Bent 2 towers of both Skid Bent A and Skid Bent B of the East Tie-In (ETI) portion of the Temporary Bypass Structure (Bridge No. 34-0006 (TEMP)) including furnishing, installing, and removing all equipment and material necessary to remove the obstruction these bents present to the lowering of the Span YB4 truss as specified under Item No. 1 above. This work shall be performed in accordance with the plans submitted (Document No: 215-SUB.00432-00) by Mammoet USA Inc. including any subsequent revisions to this plan as required for approval by the Engineer.

3) Disconnecting Skid Beam Segment A1 and Segment B1 of the East Tie-In (ETI) portion of the Temporary Bypass Structure (Bridge No. 34-0006 (TEMP)) to allow for these segments to be lowered with the Span YB4 truss as specified under Item No. 1 above and then disconnecting the segments from the Span YB4 truss after it has been lowered.

4) Provide for the furnishing, installation and removing all falsework to support the Span YB4 truss after it has been lowered as specified under Item No. 1 above and in accordance with the plans submitted (Document No: 215-SUB.00399-02) by the Contractor including any subsequent revisions to this plan as required for approval by the Engineer.

5) Performing all bridge removal work associated with the demolition and disposal of the Span YB4 truss after it has been lowered onto falsework as specified under Item No. 1 above in accordance with the plans submitted (Document No: 215-SUB.00384-00) by the Contractor including any subsequent revisions to this plan as required for approval by the Engineer.

CONTRACT CHANGE ORDER

Change Requested by: Engineer

CCO 177	Suppl. No. 0	Contract No. 04 - 0120R4	Road SF-80-12.6/13.2	FED. AID LOC.: ACBRIM-080-1(097)N

6) Performing all earthwork, grading and backfilling of foundations necessary for the work of Item No. 1 through 5 above.

For this work, the Contractor shall be compensated a lump sum of $12,709,560.00. Except for the items of work specifically excluded in this change order, this sum constitutes full and final compensation, including all markups, for all costs associated with the work of this change.

All costs associated with the following 3 items of work are excluded from this change order:

7) Performing all bridge removal work associated with the demolition and disposal of the skid bents and beams of the East Tie-In (ETI) portion of the Temporary Bypass Structure (Bridge No. 34-0006 (TEMP)) including for the demolition and disposal of Skid Beam Segment A1 and Segment B1 that are lowered with the Span YB4 truss.

8) Performing the demolition and disposal of all concrete foundations pertaining to the lowering of the Span YB4 truss (Item No. 1 above) and all concrete foundations pertaining to the falsework that supports the Span YB4 truss after it has been lowered (Item No. 4 above).

9) Performing any backfill of the ETI area beyond that specified under Item No. 6 above.

Any costs associated with these 3 items of work shall be paid under separate change orders.

Flagging costs associated with the work of this change shall be paid under Change Order No. 1 with these costs being paid at 50% by the Department. The remaining flagging costs are considered to be included in the lump sum compensation provided under this change order.

The compensation paid under this change order includes all engineering and survey costs associated with the work of this change order and no additional compensation shall be paid.

The compensation provided under this change order is based on traffic being placed on the Temporary Bypass Structure no later than 5:00 AM on September 8, 2009. Should this traffic placement be delayed beyond this time, the Contractor may be compensated for any additional costs incurred due to this delay.

Total Cost of Extra Work at Lump Sum.....$12,709,560.00

Estimated Cost: Increase ☑ Decrease ☐ **$11,249,560.00**

By reason of this order the time of completion will be adjusted as follows: 0 days

Submitted by

Signature	Resident Engineer	Date
	BILL CASEY	9-15-09

Approval Recommended by

Signature	SFOBB Construction Manager	Date
Mike Forner	MIKE FORNER	9/16/2009

Engineer Approval by

Signature	SFOBB Construction Manager	Date
Pete E. Siamidis	MIKE FORNER	10/12/2009

We the undersigned contractor, have given careful consideration to the change proposed and agree, if this proposal is approved, that we will provide all equipment, furnish the materials, except as may otherwise be noted above, and perform all services necessary for the work above specified, and will accept as full payment therefor the prices shown above.

NOTE: If you, the contractor, do not sign acceptance of this order, your attention is directed to the requirements of the specifications as to proceeding with the ordered work and filing a written protest within the time therein specified.

Contractor Acceptance by

Signature	(Print name and title)	Date
D E Hunick	DANIEL E. HUNICK, PRESIDENT	10/02/09

STATE OF CALIFORNIA - DEPARTMENT OF TRANSPORTATION

CONTRACT CHANGE ORDER MEMORANDUM

TO: MIKE FORNER / DEANNA VILCHECK	FILE: E.A. 04 - 0120R4
	CO-RTE-PM SF-80-12.6/13.2
FROM: BILL CASEY	FED. NO. ACBRIM-080-1(097)N
CCO#: **177** SUPPLEMENT#: **0** Category Code: **CHPA**	CONTINGENCY BALANCE (incl. this change) **$53,915,400.59**
COST: **$11,249,560.00** INCREASE ☑ DECREASE ☐	HEADQUARTERS APPROVAL REQUIRED? ☑ YES ☐ NO
SUPPLEMENTAL FUNDS PROVIDED: **$0.00**	IS THIS REQUEST IN ACCORDANCE WITH ENVIRONMENTAL DOCUMENTS? ☑ YES ☐ NO
CCO DESCRIPTION: Span YB4 Lowering & Demolition	**PROJECT DESCRIPTION:** CONSTRUCT ROUTE 80 TEMP BYPASS STRUCTURE

Original Contract Time:	Time Adj. This Change:	Previously Approved CCO Time Adjustments:	Percentage Time Adjusted: (including this change)	Total # of Unreconciled Deferred Time CCO(s): (including this change)
475 Day(s)	**0** Day(s)	**1195** Day(s)	**252** %	**7**

THIS CHANGE ORDER PROVIDES FOR:

The demolition and disposal of the Span YB4 steel truss.

This project, the Yerba Buena Island Detour (YBID), calls for the construction of a temporary detour for both eastbound and westbound I-80 traffic that will allow for the tie in of the new east span of the San Francisco Oakland Bay Bridge to Yerba Buena Island. The YBID encompasses three main structures, the East Tie-In to the existing bridge, the West Tie-In (WTI) to Yerba Buena Island, and the Viaduct structure between the two tie ins.

The original contract was awarded as a performance based contract with the Contractor responsible for the design of the structures based upon meeting specified design criteria. The Department issued a December 14, 2006 memo entitled Strategy for South-South Detour Contract Completion which was approved by Tony Anziano (Toll Bridge Program Manager), Richard Land (Chief Engineer) and subsequently by the TBPOC. This memo recommended that the design of the ETI structure be assumed by the Department as opposed to the as-bid performance based contractor design.

The new design of the ETI structure provides for a roll-out / roll-in concept with a new double deck steel truss span being erected adjacent to the existing span and then rolled into place after the existing span is rolled out. This change order provides for the demolition and disposal of the existing steel truss span (Span YB4) that is rolled out.

Span YB4 is a double deck steel truss roughly 80 meters long and 25 meters wide. It sits approximately 50 meters in the air and is comprised of approximately 1,400 metric tons of steel and 950 cubic meters of concrete. The condition of the truss after it has been lifted and rolled out along with the potential delays associated with demolishing this compromised structure in the air has prompted the method of lowering the span prior to demolition that is being enacted under this change order. Headquarters Construction has performed a risk management analysis of this work and concurs with this change.

The work encompassed under this change includes constructing a temporary gantry system that will support and lower the rolled out span to the ground, relocating two 150 foot high skid bent towers that are located under the roll out span so that they do not obstruct the lowering of the span, constructing falsework for the lowered span to sit on and performing the actual demolition and disposal of the steel truss.

The change order also deletes the original contract item pertaining to the removal of the YB4 span. The scope of work bid by the Contractor for this item entailed only a partial removal of the span as the majority of the span was to be incorporated into the new detour structure. This method was originally accepted by the Department prior to the award of the contract but was abandoned after the December 14, 2006 strategy memo (referenced above) called for the roll out / roll in concept to be implemented.

The deletion of the contract bid item to remove Span YB4 shall result in a $1,460,000.00 credit to the Department. Compensation for the revised method of lowering and demolition of the span shall be paid as extra work at an agreed lump sum price of $12,709,560.00 The net change order cost of $11,249,560.00 shall be financed from the contract's contingency funds. A cost analysis is on file.

No adjustment of contract time is warranted as this change will not affect the controlling operation.

ADA Notice: For individuals with sensory disabilities, this document is available in alternate formats. For information call: (916) 654-6410 or TDD (916) 654-3880 or write

This change was concurred by Alec Melkonians - Asst. Project Manager, Hong Wong - Project Engineer, and Patrick Treacy - HQ Asst. Construction Coordinator. TBPOC Approval provided on September 2, 2009.

Maintenance concurrence is not required as the work will not affect and permanent roadway items.

FHWA authorzation is no longer required as federal authorization and funding for this project has been officially withdrawn.

CONCURRED BY:			
Construction Engineer:	Bill Casey, Resident Engineer	Date	9-15-09
Bridge Engineer:		Date	
Project Engineer:	Hong Wong, PE	Date	9/5/09
Project Manager:	Alec Melkonians	Date	9/5/09
FHWA Rep.:		Date	
Environmental:		Date	
Other (specify):	Patrick Treacy, HQ Asst.Const.Co	Date	9/5/09
Other (specify):		Date	
District Prior Approval By:		Date	
HQ (Issue .Approve) By:	Bob Molera, HQ CCO Engineer	Date	9/7/09
Resident Engineer's Signature:		Date	9-15-09

ESTIMATE OF COST

	THIS REQUEST	TOTAL TO DATE
ITEMS	($1,460,000.00)	($1,460,000.00)
FORCE ACCOUNT	$0.00	$0.00
AGREED PRICE	$11,249,560.00	$11,249,560.00
ADJUSTMENT	$0.00	$0.00
TOTAL	$9,789,560.00	$9,789,560.00

FEDERAL PARTICIPATION

☐ PARTICIPATING ☐ PARTICIPATING IN PART ☑ NONE
☐ NON-PARTICIPATING (MAINTENANCE) ☐ NON-PARTICIPATING

FEDERAL SEGREGATION (if more than one Funding Source or P.I.P. type)
☐ CCO FUNDED PER CONTRACT ☐ CCO FUNDED AS FOLLOWS

FEDERAL FUNDING SOURCE	PERCENT

ADA Notice: For individuals with sensory disabilities, this document is available in alternate formats. For information call: (916) 654-6410 or TDD (916) 654-3880 or write Records and Forms Management, 1120 N Street, MS 89, Sacramento, CA 95814

STATE OF CALIFORNIA - DEPARTMENT OF TRANSPORTATION

CONTRACT CHANGE ORDER

Change Requested by: Engineer

CCO: 178	Suppl. No. 2	Contract No. 04 - 0120R4	Road SF-80-12.6/13.2	FED. AID LOC.:

To: **CC MYERS INC**

You are directed to make the following changes from the plans and specifications or do the following described work not included in the plans and specifications for this contract. ***NOTE: This change order is not effective until approved by the Engineer.***

Description of work to be done, estimate of quantities and prices to be paid. (Segregate between additional work at contract price, agreed price and force account.) Unless otherwise stated, rates for rental of equipment cover only such time as equipment is actually used and no allowance will be made for idle time. This last percentage shown is the net accumulated increase or decrease from the original quantity in the Engineer's Estimate.

Extra Work at Lump Sum:

Furnish and install the Type 7 chain link fence, as shown on sheets 2 and 3 of this Change Order, on top of the Type 732 concrete barrier at the following locations:

1. South side of the eastbound deck from WD1 Line Sta. 54+20 to Sta. 54+58.
2. North side of the eastbound deck from WD1 Line Sta. 53+82 to Sta. 54+43.
3. North side of the westbound deck from WD2 Line Sta. 54+06 to Sta. 54+67

All work shall be performed in accordance with the plans and specifications as provided under the original Change Order No. 178.

For this work, the Contractor shall be compensated an agreed lump sum of $207,690.00. Excluding the cost of providing lane closures for this work, this lump sum constitutes full and final compensation, including all markups, for all costs associated with this work.

Any lane closures required for the work of this change shall be provided under Change Order No. 240. The costs of these lane closures are excluded from this change order.

Extra Work at Agreed Lump Sum $207,690.00

Estimated Cost: Increase ☑ Decrease ☐ **$207,690.00**

By reason of this order the time of completion will be adjusted as follows: 0 days

Submitted by		
Signature Jeannie Balderrama	**Resident Engineer** JEANNIE BALDERRAMOS	**Date** 6/22/10
Signature Deanna Vilcheck	**Area Construction Manager** DEANNA VILCHECK	**Date** 6/24/10
Signature Deanna Vilcheck	**Area Construction Manager** DEANNA VILCHECK	**Date** 7/14/10

We the undersigned contractor, have given careful consideration to the change proposed and agree, if this proposal is approved, that we will provide all equipment, furnish the materials, except as may otherwise be noted above, and perform all services necessary for the work above specified, and will accept as full payment therefor the prices shown above.

NOTE: If you, the contractor, do not sign acceptance of this order, your attention is directed to the requirements of the specifications as to proceeding with the ordered work and filing a written protest within the time therein specified.

Contractor Accepts by		
Signature	**(Print name and title)** **Daniel E. Himick, President**	**Date** 7-6-2010

DIST	COUNTY	ROUTE	KILOMETER POST TOTAL PROJECT	SHEET NO	TOTAL SHEETS
04	SF	80	12.6/13.2	1	2

REGISTERED CIVIL ENGINEER

PLANS APPROVAL DATE

The State of California or its officers or agents shall not be responsible for the accuracy or completeness of electronic copies of this plan sheet.

Caltrans now has a web site! To get to the web site, go to: http://www.dot.ca.gov

REGISTERED PROFESSIONAL ENGINEER
JAIME E. GUTIERREZ
6/17/10
No. C 058924
Exp. 12/31/10
CIVIL
STATE OF CALIFORNIA

Caltrans Metric

DATE	REVISED BY
5/10	DATE REVISED
5/10	

CALCULATED/ DESIGNED BY

CHECKED BY

DESIGN OVERSIGHT

STATE OF CALIFORNIA - DEPARTMENT OF TRANSPORTATION

Caltrans

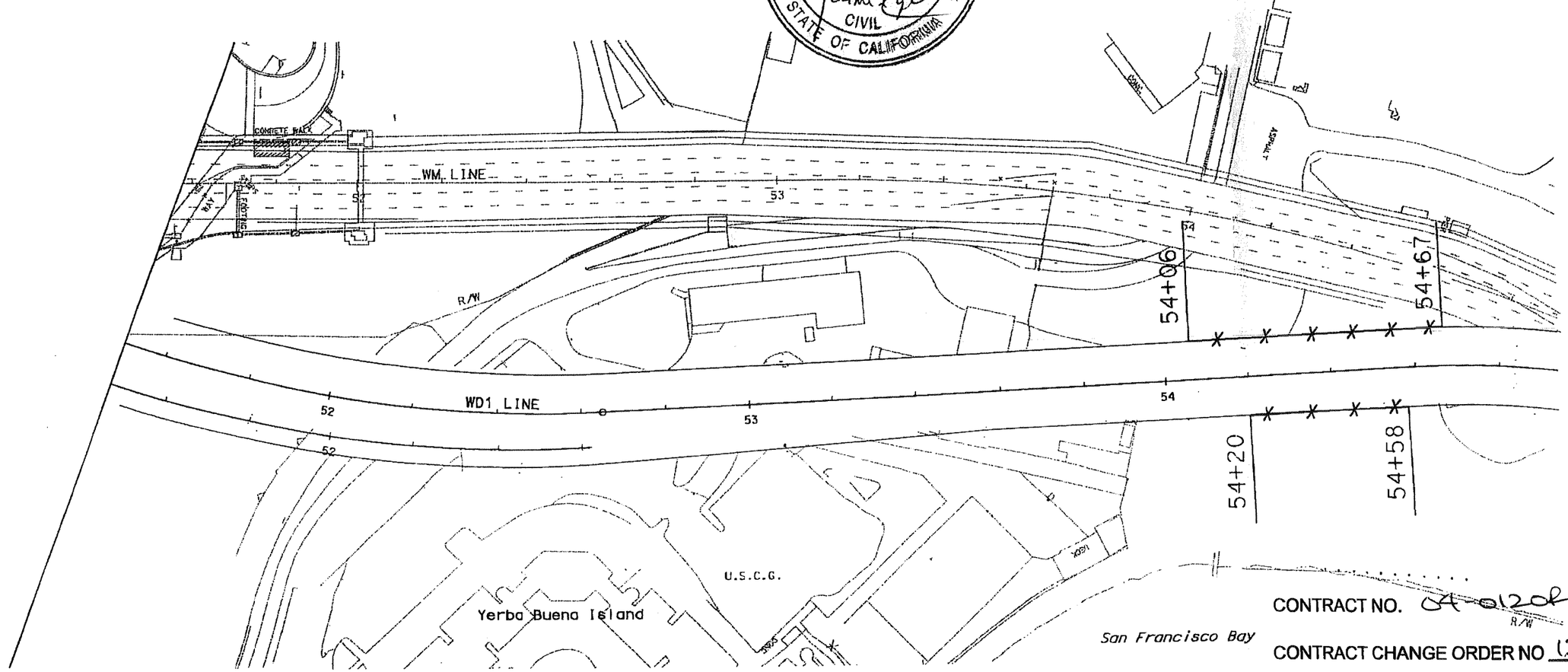

CONTRACT NO. 04-0120R4

CONTRACT CHANGE ORDER NO 178 S2

SHEET 2 OF 3

NOTE:

X X X Install Type 7 CL Fence

WESTBOUND

WB
TYPE 7 FENCE INSTALLATION
SCALE 1:500
SHT 1 OF 2

THIS PLAN ACCURATE FOR TYPE 7 FENCE WORKS ONLY.

ALL DIMENSIONS ARE IN METERS UNLESS OTHERWISE SHOWN

RELATIVE BORDER SCALE IS IN MILLIMETERS 0 20 40 60 80

DGN FILE => Fence7-sht1.dgn
USERNAME => s132884

LAST REVISION 00-00-00
DATE PLOTTED => 19-MAY-2010
TIME PLOTTED => 10:41

CU 04251

EA 0120R1

DIST	COUNTY	ROUTE	KILOMETER POST TOTAL PROJECT	SHEET No	TOTAL SHEETS
04	SF	80	12.6/13.2	2	2

REGISTERED CIVIL ENGINEER

PLANS APPROVAL DATE

The State of California or its officers or agents shall not be responsible for the accuracy or completeness of electronic copies of this plan sheet.

Caltrans now has a web site! To get to the web site, go to: http://www.dot.ca.gov

Caltrans Metric

REGISTERED PROFESSIONAL ENGINEER
JAIME E. GUTIERREZ
No. C 052324
Exp. 12/31/10
CIVIL 6/17/10
STATE OF CALIFORNIA

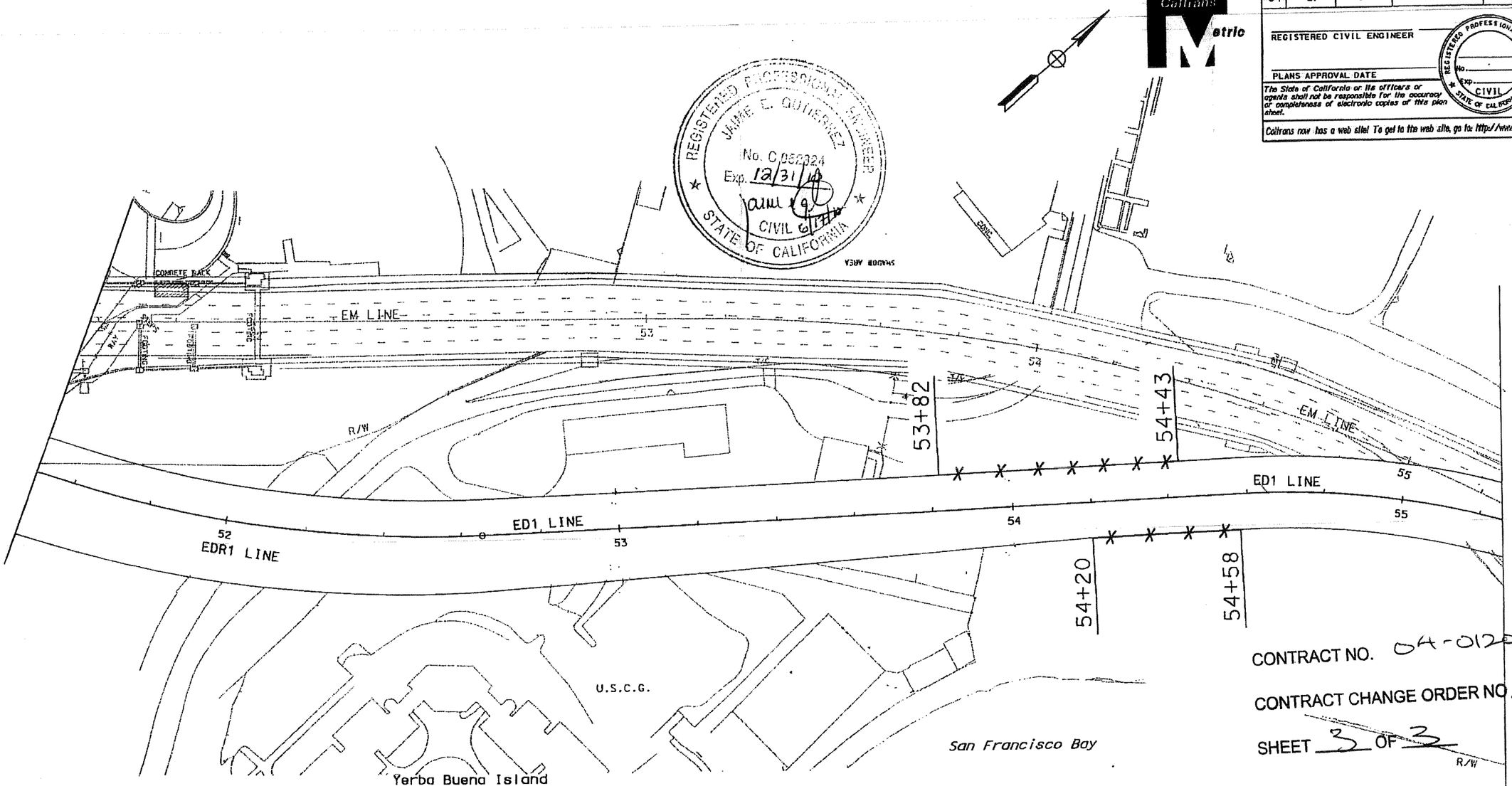

CONTRACT NO. 04-0120R4

CONTRACT CHANGE ORDER NO 178S2

SHEET 3 OF 3

EASTBOUND

NOTE:

Install Type 7 CL Fence

EB TYPE 7 FENCE INSTALLATION

SCALE 1:500

SHT 2 OF 2

THIS PLAN ACCURATE FOR TYPE 7 FENCE WORKS ONLY.

ALL DIMENSIONS ARE IN METERS UNLESS OTHERWISE SHOWN

STATE OF CALIFORNIA - DEPARTMENT OF TRANSPORTATION

Caltrans

DESIGN OVERSIGHT

CALCULATED/DESIGNED BY

CHECKED BY

DATE 5/10 REVISED BY

5/10 DATE REVISED

LAST REVISION 00-00-00

DATE PLOTTED => 19-MAY-2010
TIME PLOTTED => 10:45

RELATIVE BORDER SCALE IS IN MILLIMETERS 0 20 40 60 80

DGN FILE => Fence7-sht2.dgn
USERNAME => s132884

CU 04251

EA 0120R1

DIST	COUNTY	ROUTE	KILOMETER POST TOTAL PROJECT	SHEET NO	TOTAL SHEETS
04	SF	80	12.6/13.2	1	2

REGISTERED CIVIL ENGINEER

PLANS APPROVAL DATE

The State of California or its officers or agents shall not be responsible for the accuracy or completeness of electronic copies of this plan sheet.

Caltrans now has a web site! To get to the web site, go to: http://www.dot.ca.gov

REGISTERED PROFESSIONAL ENGINEER
JAIME E. GUTIERREZ
6/17/10
No. C 058924
Exp. 12/31/10
CIVIL
STATE OF CALIFORNIA

Caltrans Metric

DATE	REVISED BY
5/10	DATE REVISED
5/10	

CALCULATED/ DESIGNED BY

CHECKED BY

DESIGN OVERSIGHT

STATE OF CALIFORNIA - DEPARTMENT OF TRANSPORTATION

Caltrans

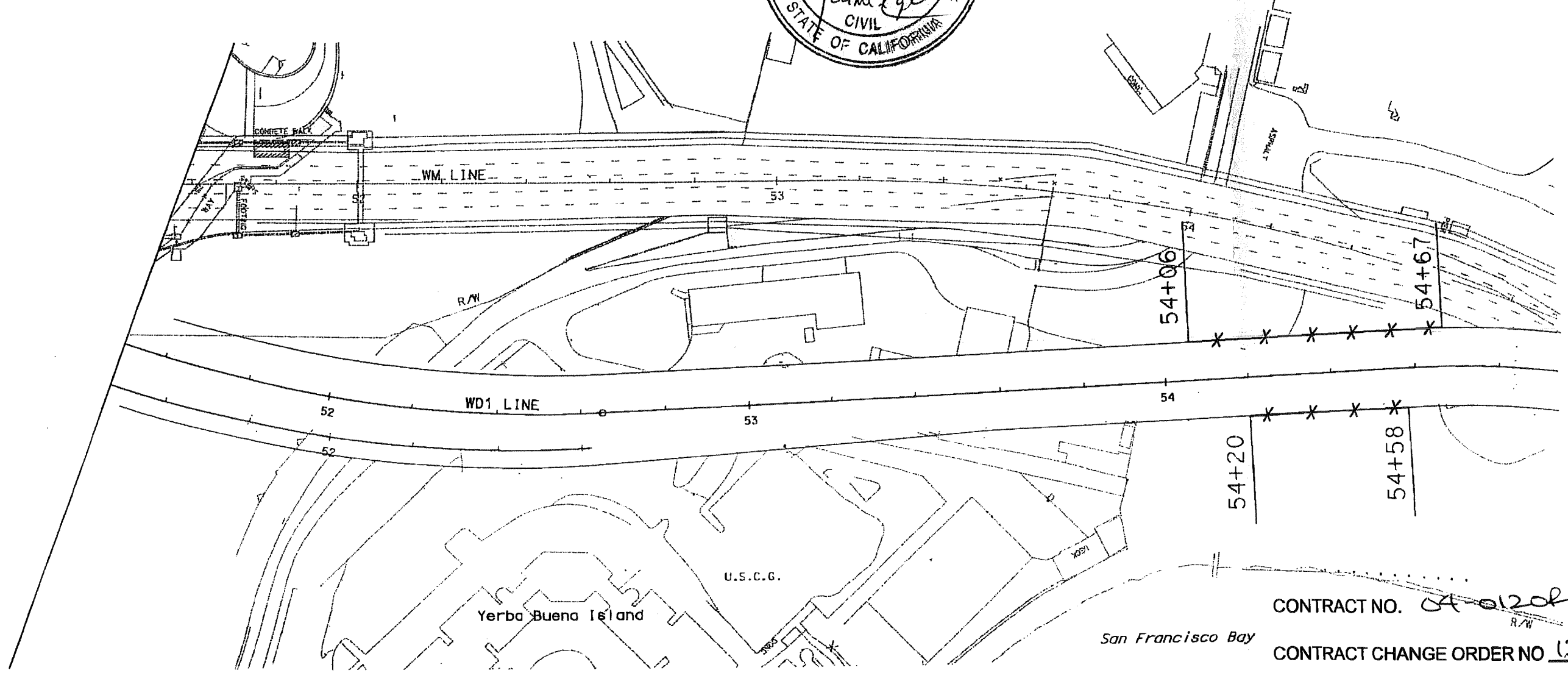

CONTRACT NO. 04-0120R4

CONTRACT CHANGE ORDER NO 178 S2

SHEET 2 OF 3

NOTE:

X X X Install Type 7 CL Fence

WESTBOUND

WB
TYPE 7 FENCE INSTALLATION
SCALE 1:500
SHT 1 OF 2

THIS PLAN ACCURATE FOR TYPE 7 FENCE WORKS ONLY.

ALL DIMENSIONS ARE IN METERS UNLESS OTHERWISE SHOWN

RELATIVE BORDER SCALE IS IN MILLIMETERS 0 20 40 60 80

DGN FILE => Fence7-sht1.dgn
USERNAME => s132884

LAST REVISION 00-00-00
DATE PLOTTED => 19-MAY-2010
TIME PLOTTED => 10:41

CU 04251

EA 0120R1

DIST	COUNTY	ROUTE	KILOMETER POST TOTAL PROJECT	SHEET No	TOTAL SHEETS
04	SF	80	12.6/13.2	2	2

REGISTERED CIVIL ENGINEER

PLANS APPROVAL DATE

The State of California or its officers or agents shall not be responsible for the accuracy or completeness of electronic copies of this plan sheet.

Caltrans now has a web site! To get to the web site, go to: http://www.dot.ca.gov

Caltrans Metric

REGISTERED PROFESSIONAL ENGINEER
JAIME E. GUTIERREZ
No. C 052324
Exp. 12/31/10
CIVIL 6/17/10
STATE OF CALIFORNIA

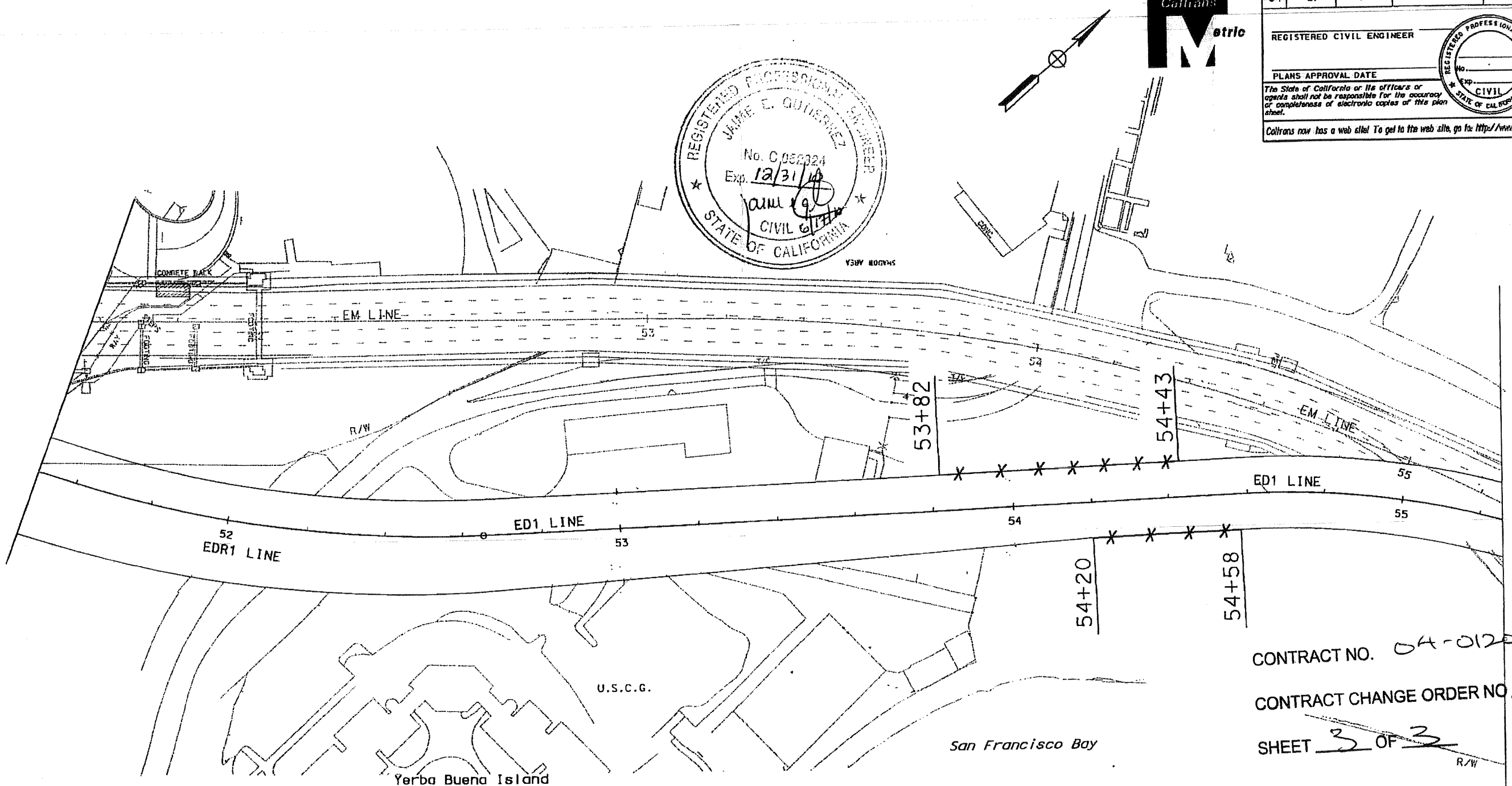

EASTBOUND

CONTRACT NO. 04-0120R4

CONTRACT CHANGE ORDER NO 178S2

SHEET 3 OF 3

NOTE:

Install Type 7 CL Fence

EB TYPE 7 FENCE INSTALLATION

SCALE 1:500

SHT 2 OF 2

THIS PLAN ACCURATE FOR TYPE 7 FENCE WORKS ONLY.

ALL DIMENSIONS ARE IN METERS UNLESS OTHERWISE SHOWN

STATE OF CALIFORNIA - DEPARTMENT OF TRANSPORTATION

Caltrans

DESIGN OVERSIGHT

CALCULATED/DESIGNED BY

CHECKED BY

DATE 5/10 REVISED BY

5/10 DATE REVISED

LAST REVISION 00-00-00

DATE PLOTTED => 19-MAY-2010
TIME PLOTTED => 10:45

RELATIVE BORDER SCALE IS IN MILLIMETERS 0 20 40 60 80

DGN FILE => Fence7-sht2.dgn
USERNAME => s132884

CU 04251

EA 0120R1

STATE OF CALIFORNIA - DEPARTMENT OF TRANSPORTATION

CONTRACT CHANGE ORDER

Change Requested by: Engineer

CCO 179	Suppl. No. 0	Contract No. 04 - 0120R4	Road SF-80-12.6/13.2	FED. AID LOC.: ACBRIM-080-1(097)N

To: **CC MYERS INC**

You are directed to make the following changes from the plans and specifications or do the following described work not included in the plans and specifications for this contract. ***NOTE: This change order is not effective until approved by the Engineer.***

Description of work to be done, estimate of quantities and prices to be paid. (Segregate between additional work at contract price, agreed price and force account.) Unless otherwise stated, rates for rental of equipment cover only such time as equipment is actually used and no allowance will be made for idle time. This last percentage shown is the net accumulated increase or decrease from the original quantity in the Engineer's Estimate.

Adjustment of Compensation at Lump Sum:

In accordance with Section 4-1.03, Changes of the Standard Specifications and the provisions of Contract Change Order 129, compensate the Contractor for all costs associated with furnishing and placing steel piles required for the falsework tower foundations necessary to erect the East Tie-In steel truss of the Temporary Bypass Structure (Bridge No. 34-0006 (TEMP)).

The Contractor agrees to accept the lump sum of $312,000.00 as full compensation to perform this work including all markups and profit. No further compensation shall be allowed.

Total Cost of Adjustment of Compensation at Lump Sum $312,000.00

Estimated Cost: **Increase** ☑ **Decrease** ☐ **$312,000.00**

By reason of this order the time of completion will be adjusted as follows: 0 days

Submitted by

Signature	Resident Engineer	Date
	BILL CASEY	3-13-09

Approval Recommended by

Signature	Area Construction Manager	Date
Deanna Vilcheck	DEANNA VILCHECK	3/16/09

Engineer Approval by

Signature	Area Construction Manager	Date
Deanna Vilcheck	DEANNA VILCHECK	4/8/09

We the undersigned contractor, have given careful consideration to the change proposed and agree, if this proposal is approved, that we will provide all equipment, furnish the materials, except as may otherwise be noted above, and perform all services necessary for the work above specified, and will accept as full payment therefor the prices shown above.

NOTE: If you, the contractor, do not sign acceptance of this order, your attention is directed to the requirements of the specifications as to proceeding with the ordered work and filing a written protest within the time therein specified.

Contractor Acceptance by

Signature	(Print name and title)	Date
	DANIEL E. HUMICK, PRESIDENT	4/03/09

STATE OF CALIFORNIA - DEPARTMENT OF TRANSPORTATION

CONTRACT CHANGE ORDER MEMORANDUM

TO: MIKE FORNER / DEANNA VILCHECK	FILE: **E.A.** 04 - 0120R4
FROM: BILL CASEY	**CO-RTE-PM** SF-80-12.6/13.2
	FED. NO. ACBRIM-080-1(097)N
CCO#: **179** SUPPLEMENT#: **0** Category Code: **CHPT**	CONTINGENCY BALANCE (incl. this change) **$68,073,160.05**
COST: **$312,000.00** INCREASE ☑ DECREASE ☐	HEADQUARTERS APPROVAL REQUIRED? ☑ YES ☐ NO
SUPPLEMENTAL FUNDS PROVIDED: **$0.00**	IS THIS REQUEST IN ACCORDANCE WITH ENVIRONMENTAL DOCUMENTS? ☑ YES ☐ NO
CCO DESCRIPTION: Truss Falsework Foundations	**PROJECT DESCRIPTION:** CONSTRUCT ROUTE 80 TEMP BYPASS STRUCTURE

Original Contract Time:	Time Adj. This Change:	Previously Approved CCO Time Adjustments:	Percentage Time Adjusted: (including this change)	Total # of Unreconciled Deferred Time CCO(s): (including this change)
475 Day(s)	**0** Day(s)	**1195** Day(s)	**252** %	**7**

THIS CHANGE ORDER PROVIDES FOR:

compensating the Contractor for all costs associated with furnishing and placing steel piles required for the falsework tower foundations necessary to erect the East Tie-In steel truss of the Temporary Bypass Structure (Bridge No. 34-0006 (TEMP)).

This project, the Temporary Bypass Structure (TBS), was awarded in March 2004 to construct a detour that will allow for the tie in of the new east span of the San Francisco Oakland Bay Bridge to Yerba Buena Island. The TBS encompasses three main structures, the East Tie-In to the existing bridge, the West Tie-In (WTI) to Yerba Buena Island, and the Viaduct structure between the two tie ins.

A December 14, 2006 Department strategy memorandum, approved by Tony Anziano, Toll Bridge Program Manager, and Richard Land, Chief Engineer, recommended that the Department assume the design responsibility for the East Tie-In (ETI) structure. Based on this memorandum, the design of the structure was changed from a design that incorporated the existing steel truss bridge with the new structure to a design that replaces the existing structure with a new structure (roll out / roll in).

This work is necessary in order to complete the East Tie-In truss erection as contemplated under CCO 129. Said CCO 129 deferred an assessment of compensation for the costs of furnishing and placing the steel piles associated with the East Tie-In falsework foundations. It was anticipated that the identified costs excluded from CCO No. 129 would result in additional change orders being issued as the work is completed and the costs are quantified and agreed to. These individual change orders have been assigned as the costs are being quantified and agreed to in order to facilitate the tracking of the excluded items.

Compensation for this change shall be performed as Adjustment of Compensation at Agreed Lump Sum for a total cost of $312,000.00, which can be financed through the Contingency Fund. A cost analysis is on file.

No adjustment of contract time is warranted, as the work will not affect the controlling operation.

This change was concurred by Alec Melkonians - Asst. Project Manager, Hong Wong - Project Engineer.

Maintenance concurrence is not required, as this work does not affect any permanent roadway features.

ADA Notice: For individuals with sensory disabilities, this document is available in alternate formats. For information call: (916) 654-6410 or TDD (916) 654-3880 or write Records and Forms Management, 1120 N Street, MS-89, Sacramento, CA 95814.

CONCURRED BY:		
Construction Engineer:	Bill Casey, Resident Engineer	Date 3-13-09
Bridge Engineer:		Date
Project Engineer:	Hong Wong, PE	Date 3/10/09
Project Manager:	Alec Melkonians	Date 3/11/09
FHWA Rep.:		Date
Environmental:		Date
Other (specify):		Date
Other (specify):		Date
District Prior Approval By:		Date
HQ (Issue Approve) By:	Bob Molera, HQ CCO Engineer	Date 3-19-09
Resident Engineer's Signature:		Date

3-13-09

ESTIMATE OF COST

	THIS REQUEST	TOTAL TO DATE
ITEMS	$0.00	$0.00
FORCE ACCOUNT	$0.00	$0.00
AGREED PRICE	$0.00	$0.00
ADJUSTMENT	$312,000.00	$312,000.00
TOTAL	$312,000.00	$312,000.00

FEDERAL PARTICIPATION

☐ PARTICIPATING ☐ PARTICIPATING IN PART ☑ NONE
☐ NON-PARTICIPATING (MAINTENANCE) ☐ NON-PARTICIPATING

FEDERAL SEGREGATION (if more than one Funding Source or P.I.P. type)
☐ CCO FUNDED PER CONTRACT ☐ CCO FUNDED AS FOLLOWS

FEDERAL FUNDING SOURCE	PERCENT

ADA Notice: For individuals with sensory disabilities, this document is available in alternate formats. For information call: (916) 654-6410 or TDD (916) 654-3880 or write Records and Forms Management, 1120 N Street, MS-89, Sacramento, CA 95814.

STATE OF CALIFORNIA - DEPARTMENT OF TRANSPORTATION

CONTRACT CHANGE ORDER

Change Requested by: Engineer

CCO 180	Suppl. No. 0	Contract No. 04 - 0120R4	Road SF-80-12.6/13.2	FED. AID LOC.: ACBRIM-080-1(097)N

To: CC MYERS INC

You are directed to make the following changes from the plans and specifications or do the following described work not included in the plans and specifications for this contract. ***NOTE: This change order is not effective until approved by the Engineer.***

Description of work to be done, estimate of quantities and prices to be paid. (Segregate between additional work at contract price, agreed price and force account.) Unless otherwise stated, rates for rental of equipment cover only such time as equipment is actually used and no allowance will be made for idle time. This last percentage shown is the net accumulated increase or decrease from the original quantity in the Engineer's Estimate.

Extra Work at Lump Sum:

Place structural backfill at East Tie-In skid bent footings A4 to A6 and B4 to B6 as shown in Contract Change Order 90. The Contractor agrees to accept the lump sum payment of $237,000.00 as full and complete compensation to perform this work including markups and profit. No further compensation shall be allowed.

Consideration of a time adjustment will be deferred until completion of the work specified herein. Determination of a commensurate time extension will be made in accordance with Section 8-1.07, "Liquidated Damages", of the Standard Specifications and Section 10-1.20 "Time Related Overhead (TRO)" of the Special Provisions.

Compensation for delays resulting from this work will be made in accordance with Section 8-1.09 "Right of Way Delays" of the Standard Specifications and Section 10-1.20 "Time Related Overhead" of the Special Provisions.

Total Cost of Extra Work at Lump Sum $237,000.00

RECEIVED
010559 JUN 22 09

Estimated Cost: Increase ☑ Decrease ☐ $237,000.00

By reason of this order the time of completion will be adjusted as follows: Deferred

Submitted by

Signature	Resident Engineer	Date
[signature]	BILL CASEY	5-13-09

Approval Recommended by

Signature	Area Construction Manager	Date
Deanna Vilcheck	DEANNA VILCHECK	5/14/09

Engineer Approval by

Signature	Area Construction Manager	Date
Deanna Vilcheck	DEANNA VILCHECK	6/5/09

We the undersigned contractor, have given careful consideration to the change proposed and agree, if this proposal is approved, that we will provide all equipment, furnish the materials, except as may otherwise be noted above, and perform all services necessary for the work above specified, and will accept as full payment therefor the prices shown above.

NOTE: If you, the contractor, do not sign acceptance of this order, your attention is directed to the requirements of the specifications as to proceeding with the ordered work and filing a written protest within the time therein specified.

Contractor Acceptance by

Signature	(Print name and title)	Date
[signature]	DANIEL E. HIMICK, PRESIDENT	5/29/09

STATE OF CALIFORNIA - DEPARTMENT OF TRANSPORTATION

CONTRACT CHANGE ORDER MEMORANDUM

DATE: 5/12/2009 Page 1 of 2

TO: MIKE FORNER / DEANNA VILCHECK

FROM: BILL CASEY

FILE: E.A. 04 - 0120R4
CO-RTE-PM SF-80-12.6/13.2
FED. NO. ACBRIM-080-1(097)N

CCO#: **180** SUPPLEMENT#: **0** Category Code: **CHPG**

CONTINGENCY BALANCE (incl. this change) **$59,308,143.60**

COST: **$237,000.00** INCREASE ☑ DECREASE ☐

HEADQUARTERS APPROVAL REQUIRED? ☑ YES ☐ NO

SUPPLEMENTAL FUNDS PROVIDED: **$0.00**

IS THIS REQUEST IN ACCORDANCE WITH ENVIRONMENTAL DOCUMENTS? ☑ YES ☐ NO

CCO DESCRIPTION:
Skid Bent Footing Backfill A4-A6/B4-B6

PROJECT DESCRIPTION:
CONSTRUCT ROUTE 80 TEMP BYPASS STRUCTURE

Original Contract Time:	Time Adj. This Change:	Previously Approved CCO Time Adjustments:	Percentage Time Adjusted: (including this change)	Total # of Unreconciled Deferred Time CCO(s): (including this change)
475 Day(s)	**DEF** Day(s)	**1195** Day(s)	**252** %	**8**

THIS CHANGE ORDER PROVIDES FOR:

compensating the Contractor for all costs associated with placing structural backfill at East Tie-In skid bent footings A4 to A6 and B4 to B6 as shown in Contract Change Order 90.

This project, the Temporary Bypass Structure (TBS), was awarded in March 2004 to construct a detour that will allow for the tie in of the new east span of the San Francisco Oakland Bay Bridge to Yerba Buena Island. The TBS encompasses three main structures, the East Tie-In to the existing bridge, the West Tie-In (WTI) to Yerba Buena Island, and the Viaduct structure between the two tie ins.

A December 14, 2006 Department strategy memorandum, approved by Tony Anziano, Toll Bridge Program Manager, and Richard Land, Chief Engineer, recommended that the Department assume the design responsibility for the East Tie-In (ETI) structure. Based on this memorandum, the design of the structure was changed from a design that incorporated the existing steel truss bridge with the new structure to a design that replaces the existing structure with a new structure (roll out / roll in).

The structural backfill work was specifically excluded from Contract Change Order 90 since that work cannot be performed until the construction of the skid bent substructure had been completed.

Compensation for this change shall be as Extra Work at Agreed Lump Sum for a total cost of $237,000.00, which can be financed through the contingency fund. . A cost analysis is on file.

Adjustment of contract time is deferred pending completion of the work specified in this change as it may become the controlling operation in accordance with Section 8-1.07 "Liquidated Damages", of the Standard Specifications and Section 10-1.20 "Time Related Overhead (TRO)" of the Special Provisions.

Compensation for delays resulting from this work will be made in accordance with Section 8-1.09 "Right of Way Delays" of the Standard Specifications and Section 10-1.20 "Time Related Overhead" of the Special Provisions.

This change was concurred by Alec Melkonians - Asst. Project Manager and Hong Wong - Project Engineer.

Maintenance concurrence is not required, as this work does not affect any permanent roadway features.

ADA Notice: For individuals with sensory disabilities, this document is available in alternate formats. For information call: (916) 654-6410 or TDD (916) 654-3880 or write Records and Forms Management, 1120 N Street, MS-89, Sacramento, CA 95814.

CONCURRED BY:		
Construction Engineer:	Bill Casey, Resident Engineer	Date 5-13-09
Bridge Engineer:		Date
Project Engineer:	Hong Wong, PE	Date 5/12/09
Project Manager:	Alec Melkonians	Date 5/12/09
FHWA Rep.:		Date
Environmental:		Date
Other (specify):		Date
Other (specify):		Date
District Prior Approval By:		Date
HQ (Issue Approve) By:	Bob Molera, HQ CCO Engineer	Date 5/20/09
Resident Engineer's Signature:		Date

5-13-09

ESTIMATE OF COST

	THIS REQUEST	TOTAL TO DATE
ITEMS	$0.00	$0.00
FORCE ACCOUNT	$0.00	$0.00
AGREED PRICE	$237,000.00	$237,000.00
ADJUSTMENT	$0.00	$0.00
TOTAL	$237,000.00	$237,000.00

FEDERAL PARTICIPATION

☐ PARTICIPATING ☐ PARTICIPATING IN PART ☑ NONE
☐ NON-PARTICIPATING (MAINTENANCE) ☐ NON-PARTICIPATING

FEDERAL SEGREGATION (if more than one Funding Source or P.I.P. type)
☐ CCO FUNDED PER CONTRACT ☐ CCO FUNDED AS FOLLOWS

FEDERAL FUNDING SOURCE	PERCENT

ADA Notice: For individuals with sensory disabilities, this document is available in alternate formats. For information call: (916) 654-6410 or TDD (916) 654-3880 or write Records and Forms Management, 1120 N Street, MS-89, Sacramento, CA 95814.

STATE OF CALIFORNIA - DEPARTMENT OF TRANSPORTATION

CONTRACT CHANGE ORDER

Change Requested by: Engineer

CCO: 181	Suppl. No. 0	Contract No. 04 - 0120R4	Road SF-80-12.6/13.2	FED. AID LOC.:

To: **CC MYERS INC**

You are directed to make the following changes from the plans and specifications or do the following described work not included in the plans and specifications for this contract. ***NOTE: This change order is not effective until approved by the Engineer.***

Description of work to be done, estimate of quantities and prices to be paid. (Segregate between additional work at contract price, agreed price and force account.) Unless otherwise stated, rates for rental of equipment cover only such time as equipment is actually used and no allowance will be made for idle time. This last percentage shown is the net accumulated increase or decrease from the original quantity in the Engineer's Estimate.

Extra Work at Lump Sum:

Provide compensation to the Contractor for all outstanding costs incurred in association with the following items of work pertaining to the erection of the steel truss and skid bents of the East Tie-In (ETI) portion of the Temporary Bypass Structure (Bridge No. 34-0006 (TEMP)):

1)Constructing the foundation for the temporary access elevator at Bent 52A.
2)Providing crane access for the steel erection.
3)Constructing the grout leveling pads at the skid bent footing and tower leg interfaces.

For this work, the Contractor shall be compensated an agreed lump sum of $49,200.00 which constitutes full and final compensation, including all markups, for all outstanding costs incurred.

Extra Work at Agreed Lump Sum $49,200.00

Estimated Cost: Increase ☑ Decrease ☐ **$49,200.00**

By reason of this order the time of completion will be adjusted as follows: 0 days

Submitted by		
Signature Jeannie Balderramos	**Resident Engineer** JEANNIE BALDERRAMOS	**Date** 8-3-10
Approval Recommended by		
Signature Jeannie Balderramos	**Senior Resident Engineer** JEANNIE BALDERRAMOS	**Date** 8-3-10
Engineer Approval by		
Signature Deanna Vilcheck	**Area Construction Manager** DEANNA VILCHECK	**Date** 8/18/10

We the undersigned contractor, have given careful consideration to the change proposed and agree, if this proposal is approved, that we will provide all equipment, furnish the materials, except as may otherwise be noted above, and perform all services necessary for the work above specified, and will accept as full payment therefor the prices shown above.

NOTE: If you, the contractor, do not sign acceptance of this order, your attention is directed to the requirements of the specifications as to proceeding with the ordered work and filing a written protest within the time therein specified.

Contractor Acceptance by		
Signature	**(Print name and title)** **Steve Francis, Chief Estimator**	**Date** 8.13.10

CONTRACT CHANGE ORDER

Change Requested by: Engineer

CCO 182	Suppl. No. 0	Contract No. 04 - 0120R4	Road SF-80-12.6/13.2	FED. AID LOC.:

To: CC MYERS INC

You are directed to make the following changes from the plans and specifications or do the following described work not included in the plans and specifications for this contract. ***NOTE: This change order is not effective until approved by the Engineer.***

Description of work to be done, estimate of quantities and prices to be paid. (Segregate between additional work at contract price, agreed price and force account.) Unless otherwise stated, rates for rental of equipment cover only such time as equipment is actually used and no allowance will be made for idle time. This last percentage shown is the net accumulated increase or decrease from the original quantity in the Engineer's Estimate.

Extra Work at Force Account:

Provide for the construction of the parking areas between Hillcrest Road and the westbound I-80 off ramp as shown on Sheets No. 2 through 4 of this change order and as authorized by the Engineer.

Estimated Cost of Extra Work at Force Account $180,000.00

Estimated Cost: **Increase** ☑ **Decrease** ☐ **$180,000.00**

By reason of this order the time of completion will be adjusted as follows: 0 days

Submitted by

Signature	Resident Engineer	Date
	BILL CASEY	12-11-09

Approval Recommended by

Signature	Area Construction Manager	Date
Deanna Vilcheck	DEANNA VILCHECK	12/14/09

Engineer Approval by

Signature	Area Construction Manager	Date
Deanna Vilcheck	DEANNA VILCHECK	12/14/09

We the undersigned contractor, have given careful consideration to the change proposed and agree, if this proposal is approved, that we will provide all equipment, furnish the materials, except as may otherwise be noted above, and perform all services necessary for the work above specified, and will accept as full payment therefor the prices shown above.

NOTE: If you, the contractor, do not sign acceptance of this order, your attention is directed to the requirements of the specifications as to proceeding with the ordered work and filing a written protest within the time therein specified.

Contractor Acceptance by

Signature	(Print name and title)	Date
	DANIEL E. HAMICK, PRESIDENT	1/18/10

Dist	COUNTY	ROUTE	KILOMETER POST TOTAL PROJECT	SHEET No.	TOTAL SHEETS
04	SF	80	12.6/13.2		

3-22-09
REGISTERED CIVIL ENGINEER DATE

Rafael A. Arnold — No. 68941 — Exp. 12-31-09 — CIVIL — REGISTERED PROFESSIONAL ENGINEER — STATE OF CALIFORNIA

PLANS APPROVAL DATE

THE STATE OF CALIFORNIA OR ITS OFFICERS OR AGENTS SHALL NOT BE RESPONSIBLE FOR THE ACCURACY OR COMPLETENESS OF ELECTRONIC COPIES OF THIS PLAN SHEET.

Metric

CONTRACT CHANGE ORDER NO. 182
SHEET 2 **OF** 4

FOR COMPLETE RIGHT OF WAY AND ACCURATE ACCESS DATA, SEE RIGHT OF WAY RECORD MAPS AT DISTRICT OFFICE.

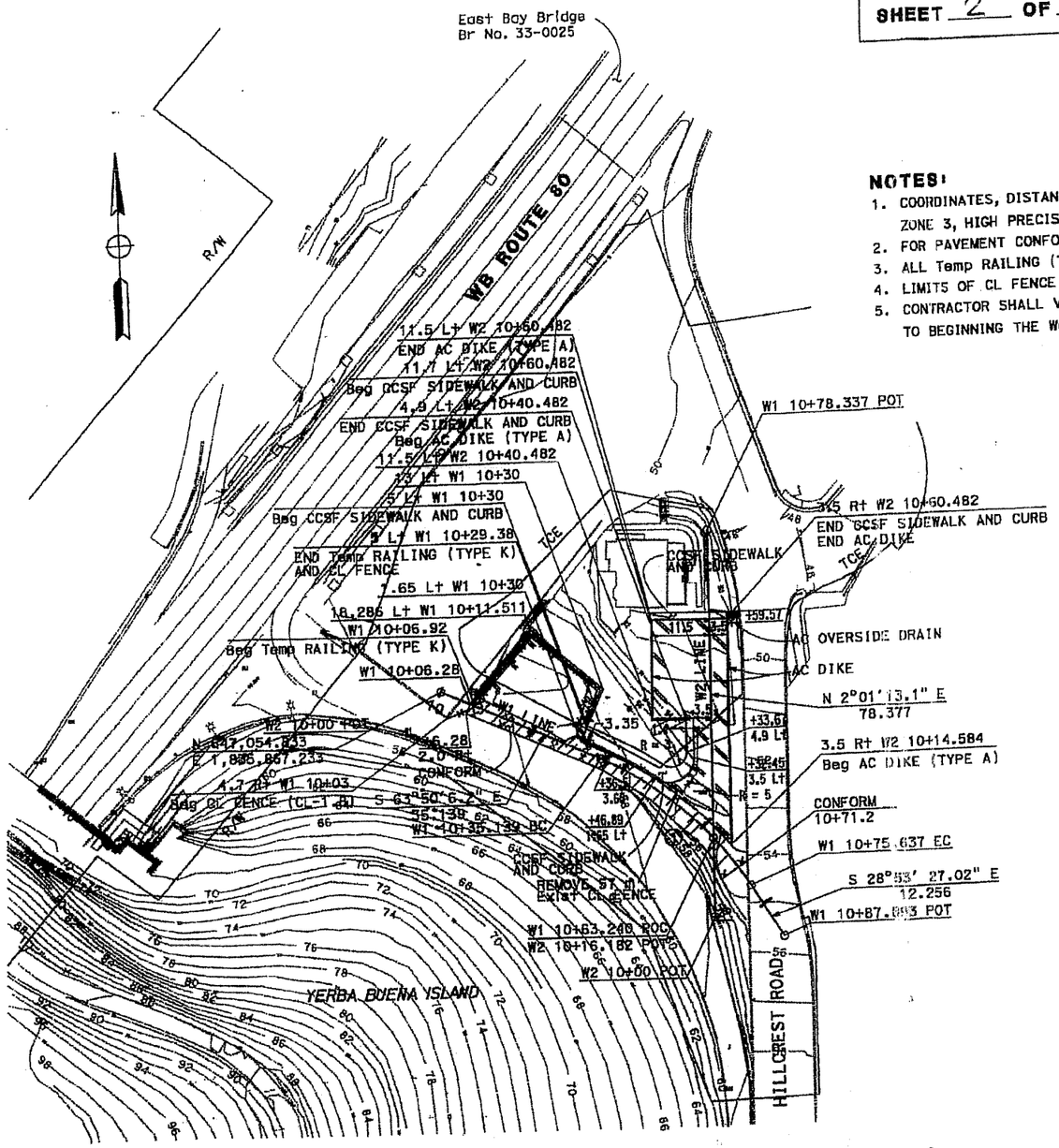

NOTES:

1. COORDINATES, DISTANCES AND BEARINGS ARE ON CCS' 83, ZONE 3, HIGH PRECISION GEODETIC NETWORK (1991.35 EPOCH).
2. FOR PAVEMENT CONFORM DETAILS, SEE C-SHEET.
3. ALL Temp RAILING (TYPE K) SHALL BE DOWELED, SEE C-SHEET.
4. LIMITS OF CL FENCE REMOVAL AS DIRECTED BY THE ENGINEER.
5. CONTRACTOR SHALL VERIFY ALL CONTROLLING DIMENSIONS PRIOR TO BEGINNING THE WORK.

LEGEND:

- AC OVERLAY (25 mm Min)
- Parking Pvmt Limit
- GRIND AC Pavement
- TEMPORARY RAILING (TYPE K)

CURVE DATA

No.	R	Δ	T	L	N-Coordinate	E-Coordinate
①	66.402	34°56'39''	20.901	40.498	646979.741	1835869.491

ALL DIMENSIONS ARE IN METERS UNLESS OTHERWISE SHOWN

LAYOUT

SCALE: 1:500

L-1

REVISED BY	DATE REVISED

CALCULATED-DESIGNED BY
CHECKED BY

FUNCTIONAL SUPERVISOR: JAIME GUTIERREZ

STATE OF CALIFORNIA - DEPARTMENT OF TRANSPORTATION
Caltrans
DESIGN

RELATIVE BORDER SCALE 0 20 40 60 80

USERNAME => s128097
DGN FILE => Parking lot Concept 6- Cad Work.dgn

DATE PLOTTED => 26-MAR-2009
TIME PLOTTED => 13:46
03-26-09

CU 04251

EA 0120R1

Dist	COUNTY	ROUTE	KILOMETER POST TOTAL PROJECT	SHEET No.	TOTAL SHEETS
04	SF	80	12.6/13.2		

Rafael Rovelo 3-22-09
REGISTERED CIVIL ENGINEER DATE

PLANS APPROVAL DATE

THE STATE OF CALIFORNIA OR ITS OFFICERS OR AGENTS SHALL NOT BE RESPONSIBLE FOR THE ACCURACY OR COMPLETENESS OF ELECTRONIC COPIES OF THIS PLAN SHEET.

REGISTERED PROFESSIONAL ENGINEER — Rafael A. Rovelo — No. 68941 — Exp. 12-31-09 — CIVIL — STATE OF CALIFORNIA

CONTRACT CHANGE ORDER NO. 182
SHEET 3 OF 4

Metric

REVISED BY | DATE REVISED
CALCULATED-DESIGNED BY | CHECKED BY
FUNCTIONAL SUPERVISOR: JAIME GUTIERREZ

STATE OF CALIFORNIA - DEPARTMENT OF TRANSPORTATION
DESIGN

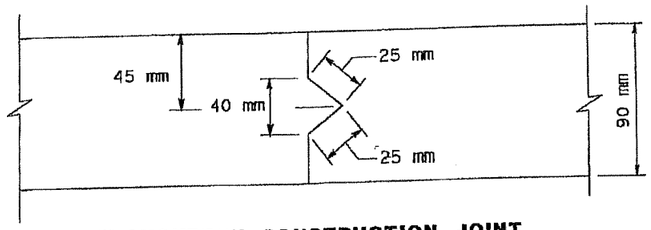

TRANSVERSE CONSTRUCTION JOINT FOR CONCRETE SIDEWALK (TYPE CCSF)

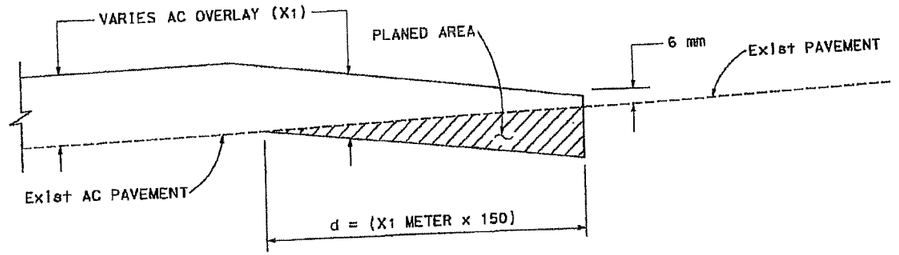

PAVING CONFORM DETAIL

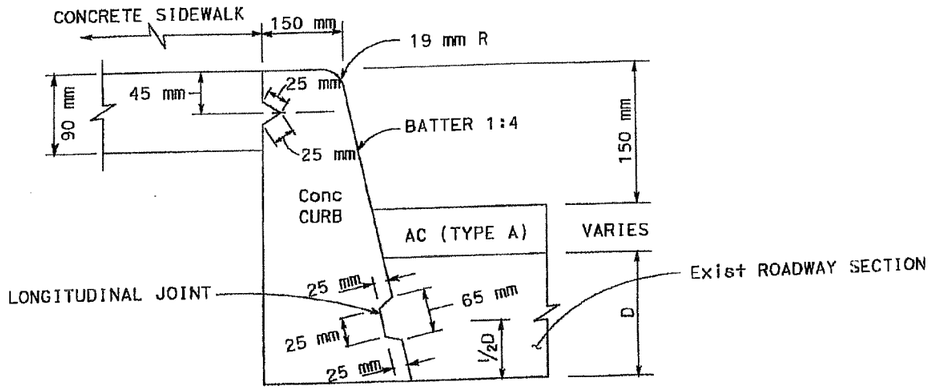

CONCRETE CURB (TYPE CCSF) AND CONCRETE SIDEWALK (TYPE CCSF)

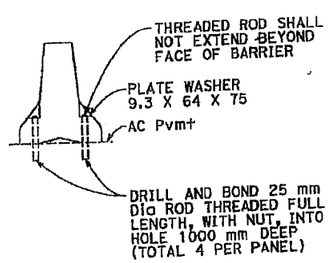

DOWELING DETAIL

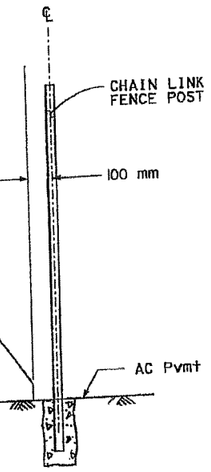

FENCE DETAIL

TEMPORARY RAILING (TYPE K)

ALL DIMENSIONS ARE IN METERS UNLESS OTHERWISE SHOWN

CONSTRUCTION DETAILS

NO SCALE

C-1

LAST REVISION: 03-26-09 | DATE PLOTTED => 26-MAR-2009 | TIME PLOTTED => 12:56

BORDER LAST REVISED 3/1/2007

RELATIVE BORDER SCALE IS IN MILLIMETERS 0 20 40 60 80

USERNAME => s128097
DGN FILE => Parking lot Concept 6- Cad Work.dgn

CU 04251 | EA 0120R1

Dist	COUNTY	ROUTE	KILOMETER POST TOTAL PROJECT	SHEET No.	TOTAL SHEETS
04	SF	80	12.6/13.2		

REGISTERED CIVIL ENGINEER — 3-26-09 DATE

PLANS APPROVAL DATE

REGISTERED PROFESSIONAL ENGINEER — Rafael A. Rovelo — No. 68941 — Exp. 12-31-09 — CIVIL — STATE OF CAL. FORNIA

THE STATE OF CALIFORNIA OR ITS OFFICERS OR AGENTS SHALL NOT BE RESPONSIBLE FOR THE ACCURACY OR COMPLETENESS OF ELECTRONIC COPIES OF THIS PLAN SHEET.

NOTES:

1. DIMENSIONS OF THE STRUCTURAL SECTIONS ARE SUBJECT TO TOLERANCES SPECIFIED IN THE STANDARD SPECIFICATIONS.
2. FOR LIMITS OF Temp RAILING (TYPE K), CCSF SIDEWALK, CCSF CURB, AND CL FENCE, SEE L-SHEET.

TYPICAL STRUCTURAL SECTIONS:

1 — 100 mm HMA(A) / 150 mm Cl 3 AB

2 — 30 mm HMA(A)

ABBREVIATIONS:

HMA(A) HOT MIX ASPHALT (TYPE A)

CONTRACT CHANGE ORDER NO. 182

SHEET 4 OF 4

Metric

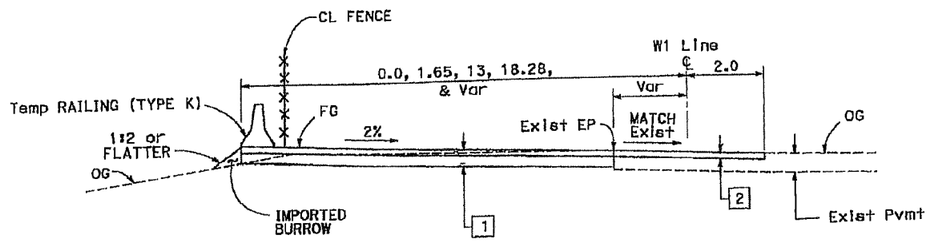

W1 10+6.28 TO 10+30

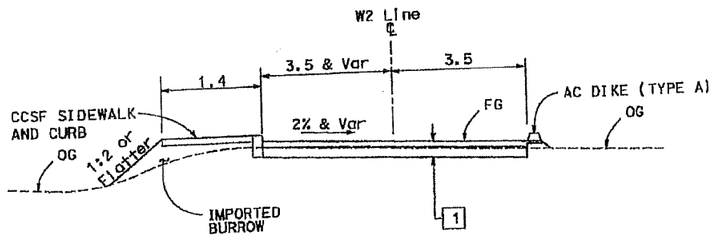

W2 10+27.45 TO 10+40.48

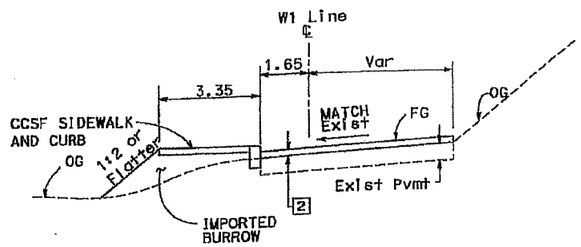

W1 10+37 TO 10+45

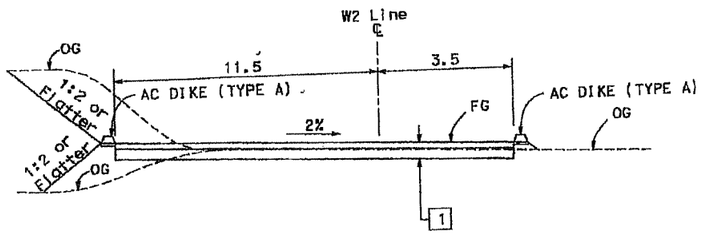

W2 10+40.48 TO 10+60.48

ALL DIMENSIONS ARE IN METERS UNLESS OTHERWISE SHOWN

TYPICAL CROSS SECTIONS

NO SCALE

X-1

STATE OF CALIFORNIA - DEPARTMENT OF TRANSPORTATION	FUNCTIONAL SUPERVISOR	CALCULATED-DESIGNED BY	CHECKED BY	REVISED BY	DATE REVISED
Caltrans DESIGN	JAIME GUTIERREZ				

LAST REVISION 03-26-09 | DATE PLOTTED => 26-MAR-2009 | TIME PLOTTED => 12:56

BORDER LAST REVISED 3/1/2007

RELATIVE BORDER SCALE IS IN MILLIMETERS 0 20 40 60 80

USERNAME => s126097
DGN FILE => Parking lot Concept 6- Cad Work.dgn

CU 04251 | EA 0120R1

Dist	COUNTY	ROUTE	KILOMETER POST TOTAL PROJECT	SHEET No.	TOTAL SHEETS
04	SF	80	12.6/13.2		

REGISTERED CIVIL ENGINEER — DATE 3-22-09

PLANS APPROVAL DATE

THE STATE OF CALIFORNIA OR ITS OFFICERS OR AGENTS SHALL NOT BE RESPONSIBLE FOR THE ACCURACY OR COMPLETENESS OF ELECTRONIC COPIES OF THIS PLAN SHEET.

REGISTERED PROFESSIONAL ENGINEER — Rafael A. Reynoso — No. 68941 — Exp. 12-31-09 — CIVIL — STATE OF CALIFORNIA

Metric

CONTRACT CHANGE ORDER NO. 182
SHEET 2 OF 4

FOR COMPLETE RIGHT OF WAY AND ACCURATE ACCESS DATA, SEE RIGHT OF WAY RECORD MAPS AT DISTRICT OFFICE.

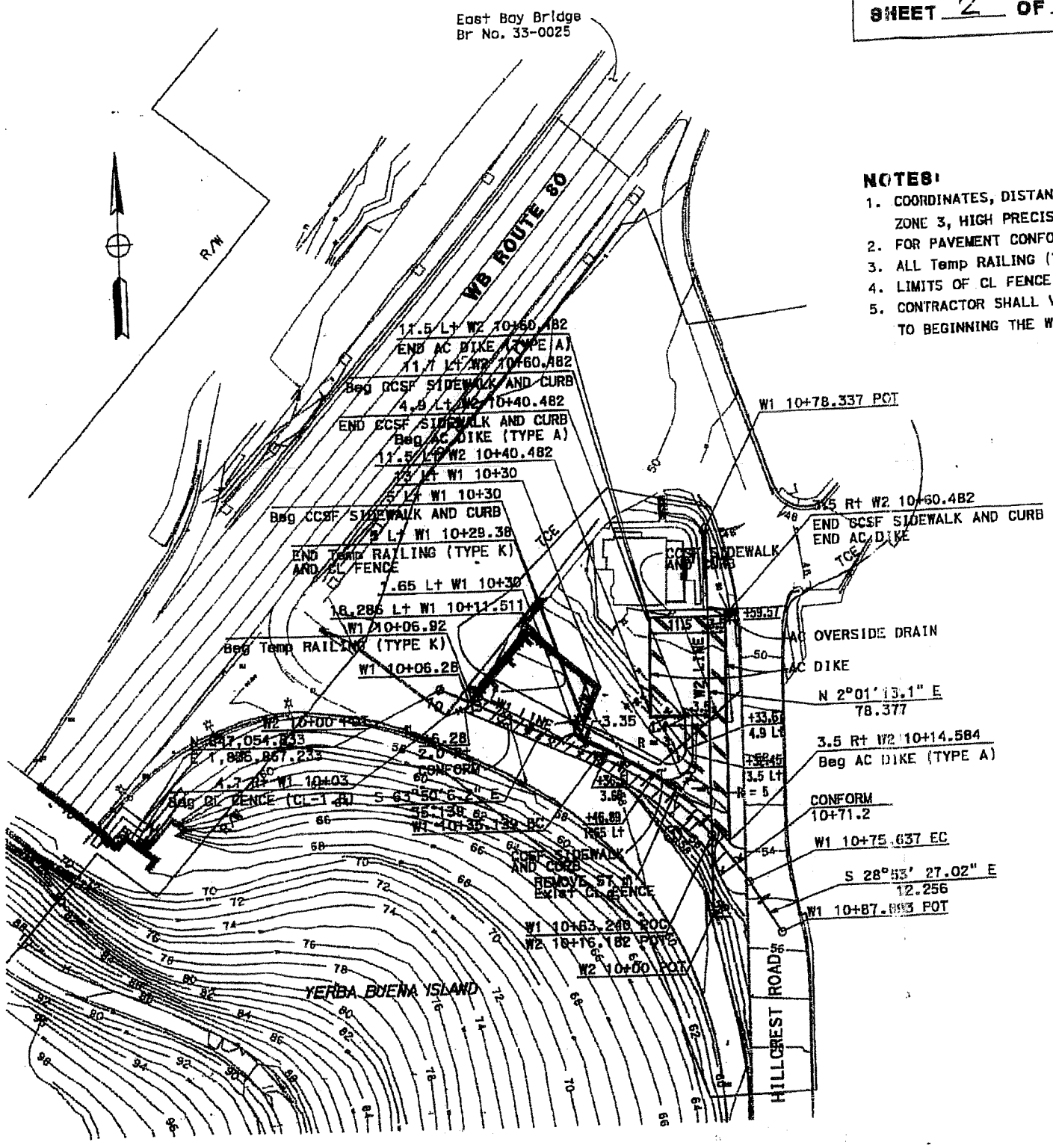

NOTES:

1. COORDINATES, DISTANCES AND BEARINGS ARE ON CCS' 83, ZONE 3, HIGH PRECISION GEODETIC NETWORK (1991.35 EPOCH).
2. FOR PAVEMENT CONFORM DETAILS, SEE C-SHEET.
3. ALL Temp RAILING (TYPE K) SHALL BE DOWELED, SEE C-SHEET.
4. LIMITS OF CL FENCE REMOVAL AS DIRECTED BY THE ENGINEER.
5. CONTRACTOR SHALL VERIFY ALL CONTROLLING DIMENSIONS PRIOR TO BEGINNING THE WORK.

LEGEND:

- AC OVERLAY (25 mm Min)
- Parking Pvmt Limit
- GRIND AC Pavement
- TEMPORARY RAILING (TYPE K)

CURVE DATA

No.	R	Δ	T	L	N-Coordinate	E-Coordinate
①	66.402	34°56'39''	20.901	40.498	646979.741	1835869.491

ALL DIMENSIONS ARE IN METERS UNLESS OTHERWISE SHOWN

LAYOUT

SCALE: 1:500

L-1

REVISED BY	DATE REVISED

CALCULATED-DESIGNED BY

CHECKED BY

FUNCTIONAL SUPERVISOR: JAIME GUTIERREZ

STATE OF CALIFORNIA - DEPARTMENT OF TRANSPORTATION

Caltrans

DESIGN

RELATIVE BORDER SCALE 0 20 40 60 80

USERNAME => a126097
DGN FILE => Parking lot Concept 6- Cod Work.dgn

DATE PLOTTED => 26-MAR-2009
TIME PLOTTED => 15:48

CU 04251	EA 0120R1

Dist	COUNTY	ROUTE	KILOMETER POST TOTAL PROJECT	SHEET No.	TOTAL SHEETS
04	SF	80	12.6/13.2		

REGISTERED CIVIL ENGINEER — DATE 3-22-09

PLANS APPROVAL DATE

Registered Professional Engineer — Rafael A. Rovalo — No. 68941 — Exp. 12-31-09 — CIVIL — State of California

THE STATE OF CALIFORNIA OR ITS OFFICERS OR AGENTS SHALL NOT BE RESPONSIBLE FOR THE ACCURACY OR COMPLETENESS OF ELECTRONIC COPIES OF THIS PLAN SHEET.

Metric

CONTRACT CHANGE ORDER NO. 182
SHEET 3 OF 4

REVISED BY	DATE REVISED

CALCULATED-DESIGNED BY	CHECKED BY

FUNCTIONAL SUPERVISOR: JAIME GUTIERREZ

STATE OF CALIFORNIA - DEPARTMENT OF TRANSPORTATION
Caltrans
DESIGN

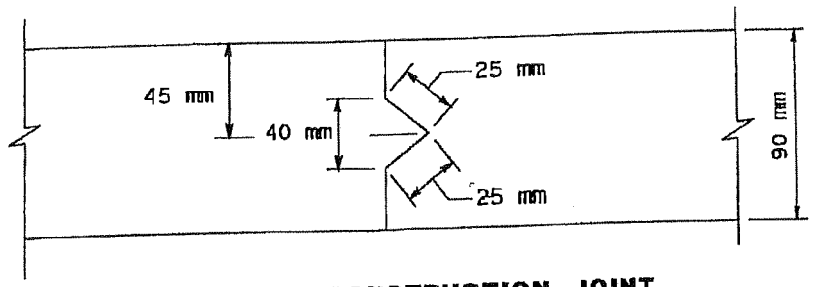

TRANSVERSE CONSTRUCTION JOINT FOR CONCRETE SIDEWALK (TYPE CCSF)

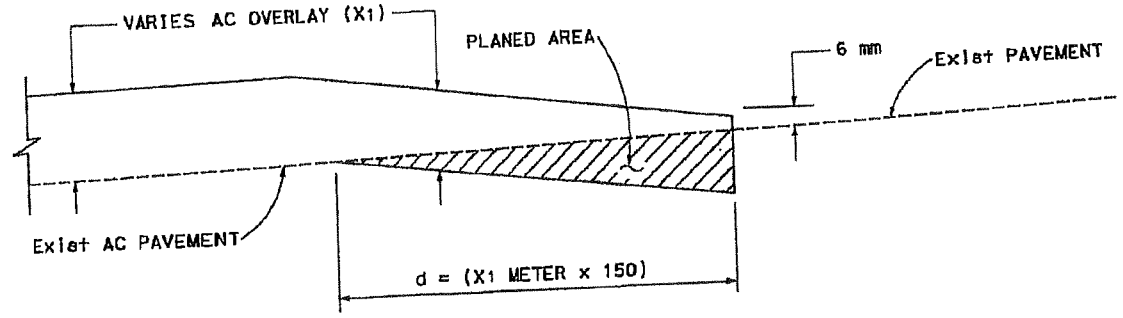

PAVING CONFORM DETAIL

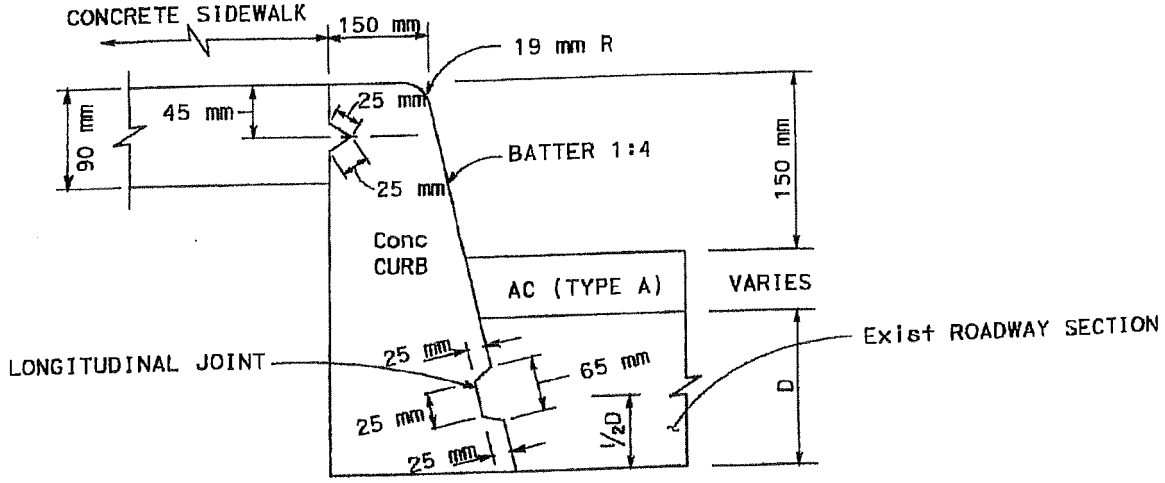

CONCRETE CURB (TYPE CCSF) AND CONCRETE SIDEWALK (TYPE CCSF)

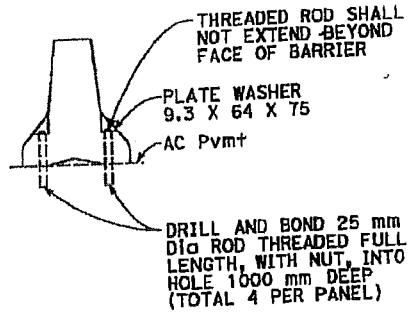

DOWELING DETAIL

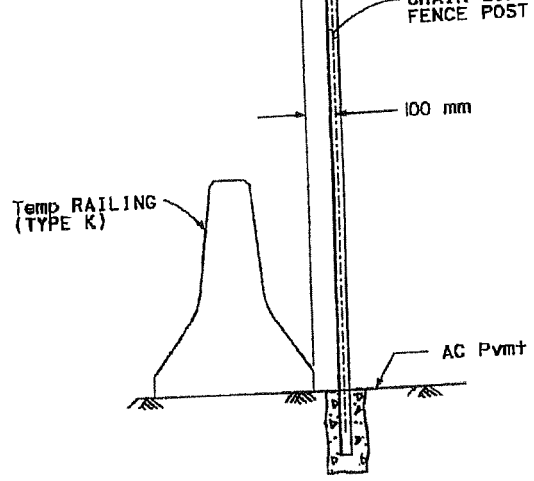

FENCE DETAIL

TEMPORARY RAILING (TYPE K)

ALL DIMENSIONS ARE IN METERS UNLESS OTHERWISE SHOWN

CONSTRUCTION DETAILS
NO SCALE

C-1

LAST REVISION 03-26-09 | DATE PLOTTED => 26-MAR-2009 | TIME PLOTTED => 12:56

BORDER LAST REVISED 3/1/2007

RELATIVE BORDER SCALE IS IN MILLIMETERS — 0 20 40 60 80

USERNAME => s128097
DGN FILE => Parking lot Concept 6- Cad Work.dgn

CU 04251	EA 0120R1

Dist	COUNTY	ROUTE	KILOMETER POST TOTAL PROJECT	SHEET No.	TOTAL SHEETS
04	SF	80	12.6/13.2		

Rafael A. Rosello — 3-26-09
REGISTERED CIVIL ENGINEER — DATE

PLANS APPROVAL DATE

THE STATE OF CALIFORNIA OR ITS OFFICERS OR AGENTS SHALL NOT BE RESPONSIBLE FOR THE ACCURACY OR COMPLETENESS OF ELECTRONIC COPIES OF THIS PLAN SHEET.

REGISTERED PROFESSIONAL ENGINEER — Rafael A. Rosello — No. 68941 — Exp. 12-31-09 — CIVIL — STATE OF CALIFORNIA

NOTES:

1. DIMENSIONS OF THE STRUCTURAL SECTIONS ARE SUBJECT TO TOLERANCES SPECIFIED IN THE STANDARD SPECIFICATIONS.
2. FOR LIMITS OF Temp RAILING (TYPE K), CCSF SIDEWALK, CCSF CURB, AND CL FENCE, SEE L-SHEET.

TYPICAL STRUCTURAL SECTIONS:

[1] 100 mm HMA(A) / 150 mm CL 3 AB

[2] 30 mm HMA(A)

ABBREVIATIONS:

HMA(A) HOT MIX ASPHALT (TYPE A)

CONTRACT CHANGE ORDER NO. 182
SHEET 4 **OF** 4

Metric

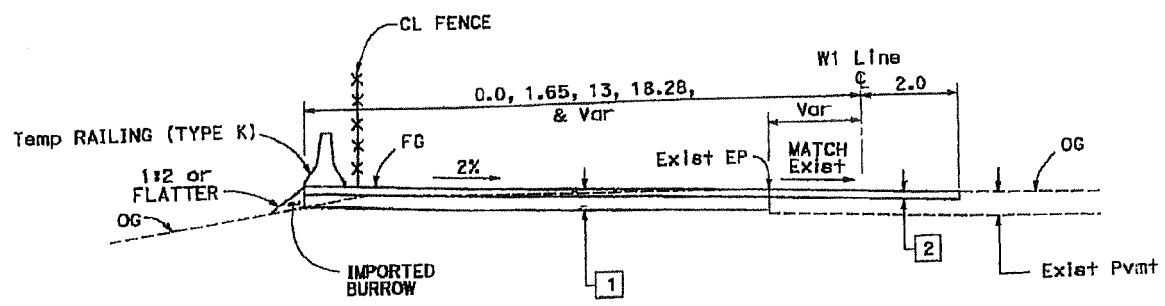

W1 10+6.28 TO 10+30

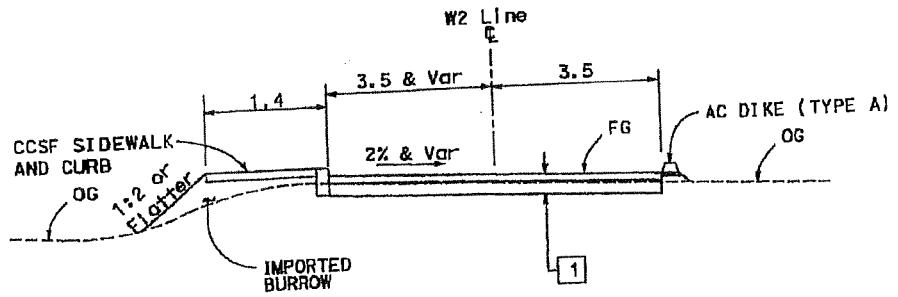

W2 10+27.45 TO 10+40.48

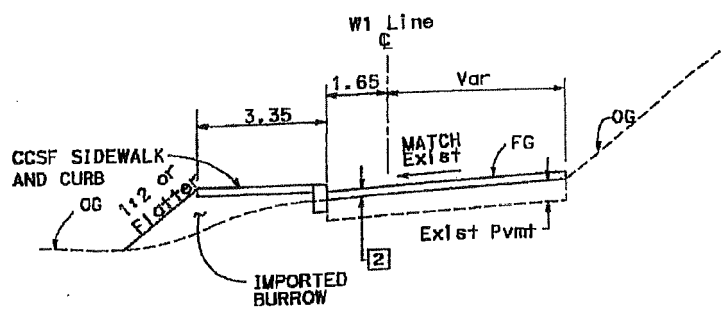

W1 10+37 TO 10+45

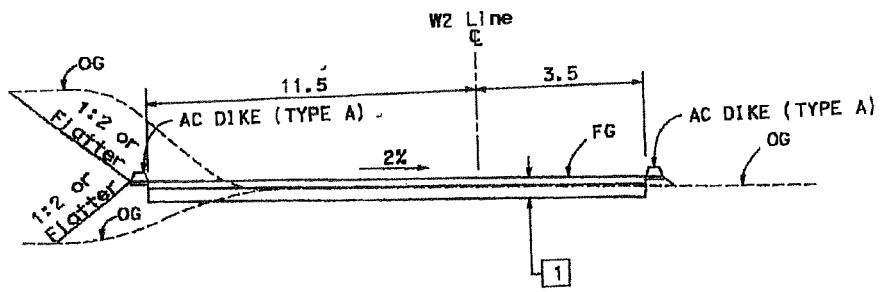

W2 10+40.48 TO 10+60.48

ALL DIMENSIONS ARE IN METERS UNLESS OTHERWISE SHOWN

TYPICAL CROSS SECTIONS

NO SCALE

X-1

STATE OF CALIFORNIA - DEPARTMENT OF TRANSPORTATION
Caltrans
DESIGN
FUNCTIONAL SUPERVISOR: JAIME GUTIERREZ
CALCULATED-DESIGNED BY
CHECKED BY
REVISED BY
DATE REVISED

LAST REVISION DATE PLOTTED => 26-MAR-2009
TIME PLOTTED => 12:56
03-26-09

USERNAME => s128097
DGN FILE => Parking lot Concept 5- Cad Work.dgn

CU 04251 | EA 0120R1

RELATIVE BORDER SCALE IS IN MILLIMETERS 0 20 40 60 80

BORDER LAST REVISED 3/1/2007

STATE OF CALIFORNIA - DEPARTMENT OF TRANSPORTATION

CONTRACT CHANGE ORDER MEMORANDUM

DATE: 11/9/2009 Page 1 of 2

TO: MIKE FORNER / DEANNA VILCHECK	FILE: E.A. 04 - 0120R4
	CO-RTE-PM SF-80-12.6/13.2
FROM: BILL CASEY	FED. NO.
CCO#: **182** SUPPLEMENT#: **0** Category Code: **CGAC**	CONTINGENCY BALANCE (incl. this change) **$46,391,251.59**
COST: **$180,000.00** INCREASE ☑ DECREASE ☐	HEADQUARTERS APPROVAL REQUIRED? ☐ YES ☑ NO
SUPPLEMENTAL FUNDS PROVIDED: **$0.00**	IS THIS REQUEST IN ACCORDANCE WITH ENVIRONMENTAL DOCUMENTS? ☑ YES ☐ NO
CCO DESCRIPTION: Additional Parking Space for USCG	**PROJECT DESCRIPTION:** CONSTRUCT ROUTE 80 TEMP BYPASS STRUCTURE

Original Contract Time:	Time Adj. This Change:	Previously Approved CCO Time Adjustments:	Percentage Time Adjusted: (including this change)	Total # of Unreconciled Deferred Time CCO(s): (including this change)
475 Day(s)	**0** Day(s)	**1660** Day(s)	**349** %	**7**

THIS CHANGE ORDER PROVIDES FOR:

The construction of a parking area for the adjacent United States Coast Guard facility.

This project was awarded in March 2004 to construct a detour that will allow for the tie in of the new east span of the San Francisco Oakland Bay Bridge to Yerba Buena Island. The detour encompasses three main structures, the East Tie-In to the existing bridge, the West Tie-In (WTI) to Yerba Buena Island and the Viaduct structure between the two tie ins. The original contract completion date was July 2005.

Two separate Department strategy memorandums issued on December 14, 2006 entitled 'Strategy for South-South Detour Contract Completion' and December 25, 2006 entitled 'Recommendation to Construct Select Yerba Buena Island Transition Structure Foundations by Contract Change Order' were approved by Tony Anziano - Toll Bridge Program Manager, Richard Land - Chief Engineer, and the Toll Bridge Program Oversight Committee (TBPOC), recommended that the Department assume responsibility for the designs of the East Tie-In (ETI) and West Tie-In (WTI) portions of this contract, and incorporated seismic retrofit work of the permanent Yerba Buena Island Transition Structure (YBITS) onto this project. The approval of these strategy memorandums extended the project completion date approximately 5 years.

The contract has now been extended to December of 2010 due to over 5 years of Department delay. This delay has had significant impacts on the adjacent U.S. Coast Guard facility whose main access runs directly through the project work site and who also vacated certain parking areas in order to provide access to the site. Project Development has now requested that an additional parking area be constructed for the Coast Guard in order to mitigate the disruptions caused by the extensive delay to the project.

The work includes the construction of 2 small hot mix asphalt parking areas along with the construction of concrete sidewalks that connect the parking areas to the U.S. Coast Guard base. The work also includes grading of the lots, the placement of temporary k-rail, AC dike and chain link fencing, and the maintenance of the parking areas over the remaining duration of this project.

Compensation for the cost of constructing the parking areas shall be paid as an extra work at force account at an estimated cost of $180,000.00 which shall be financed from the contract's contingency funds. A cost estimate is on file.

No adjustment of contract time is warranted as the work will not affect the controlling operation.

This change was requested by Alec Melkonians - Asst. Project Manager per Memorandum dated May 27, 2009 and concurred with by Minh B. Nguyen - Project Engineer.

Maintenance concurrence is not required as this change doesn't affect any permanent roadway features.

ADA Notice: For individuals with sensory disabilities, this document is available in alternate formats. For information call: (916) 654-6410 or TDD (916) 654-3880 or write Records and Forms Management, 1120 N Street, MS 89, Sacramento, CA 95814.

CONCURRED BY:		
Construction Engineer:	Bill Casey, Resident Engineer	Date 12-18-09
Bridge Engineer:		Date
Project Engineer:	Minh B. Nguyen, PE	Date 12-4-09
Project Manager:	Alec Melkonians	Date 5/27/09
FHWA Rep.:		Date
Environmental:		Date
Other (specify):		Date
Other (specify):		Date
District Prior Approval By:		Date
HQ (Issue Approve) By:		Date
Resident Engineer's Signature:		Date

12-11-09

ESTIMATE OF COST

	THIS REQUEST	TOTAL TO DATE
ITEMS	$0.00	$0.00
FORCE ACCOUNT	$180,000.00	$180,000.00
AGREED PRICE	$0.00	$0.00
ADJUSTMENT	$0.00	$0.00
TOTAL	$180,000.00	$180,000.00

FEDERAL PARTICIPATION

☐ PARTICIPATING ☐ PARTICIPATING IN PART ☑ NONE
☐ NON-PARTICIPATING (MAINTENANCE) ☐ NON-PARTICIPATING

FEDERAL SEGREGATION (if more than one Funding Source or P.I.P. type)
☐ CCO FUNDED PER CONTRACT ☐ CCO FUNDED AS FOLLOWS

FEDERAL FUNDING SOURCE	PERCENT

ADA Notice: For individuals with sensory disabilities, this document is available in alternate formats. For information call: (916) 654-6410 or TDD (916) 654-3880 or write Records and Forms Management, 1120 N Street, MS-89, Sacramento, CA 95814

STATE OF CALIFORNIA - DEPARTMENT OF TRANSPORTATION

CONTRACT CHANGE ORDER

Change Requested by: Engineer

CCO: 182	Suppl. No. 1	Contract No. 04 - 0120R4	Road SF-80-12.6/13.2	FED. AID LOC.:

To: CC MYERS INC

You are directed to make the following changes from the plans and specifications or do the following described work not included in the plans and specifications for this contract. ***NOTE: This change order is not effective until approved by the Engineer.***

Description of work to be done, estimate of quantities and prices to be paid. (Segregate between additional work at contract price, agreed price and force account.) Unless otherwise stated, rates for rental of equipment cover only such time as equipment is actually used and no allowance will be made for idle time. This last percentage shown is the net accumulated increase or decrease from the original quantity in the Engineer's Estimate.

Extra Work at Force Account:

Provide for the construction of the additional parking area south of the West Tie-In structure and modify the parking area provided under the original Change Order No. 182 between Hillcrest Road and the westbound I-80 off ramp as shown on Sheets No. 2 through 6 of this change order and as determined by the Engineer.

Estimated cost of Extra Work at Force Account $220,000.00

RECEIVED
MAR 15 10
011623

Estimated Cost: Increase ☑ Decrease ☐ **$220,000.00**

By reason of this order the time of completion will be adjusted as follows: 0 days

Submitted by		
Signature Deanna Vilcheck	**Resident Engineer** BILL CASEY	**Date** 2/1/10
Approval Recommended by		
Signature Deanna Vilcheck	**Area Construction Manager** DEANNA VILCHECK	**Date** 2/11/10
Engineer Approval by		
Signature Deanna Vilcheck	**Area Construction Manager** DEANNA VILCHECK	**Date** 2/23/10

We the undersigned contractor, have given careful consideration to the change proposed and agree, if this proposal is approved, that we will provide all equipment, furnish the materials, except as may otherwise be noted above, and perform all services necessary for the work above specified, and will accept as full payment therefor the prices shown above.

NOTE: If you, the contractor, do not sign acceptance of this order, your attention is directed to the requirements of the specifications as to proceeding with the ordered work and filing a written protest within the time therein specified.

Contractor Acceptance by		
Signature	**(Print name and title)** DANIEL E. HUMICK, PRESIDENT	**Date** 2/18/10

Calculated by: R.Ravelo Date: 3/26/2009
Updated by: Emily Liu Date: 5/5/2009

Notes:

1. Finish grade elevations calculated using outdated and unmerged DTM files.
2. Most current DTM file used is dated 2/7/08.
3. Assumed cleared areas are temporary and for USCG use only.
3. Assumed roadway is temporary and not for general public use.

W1 Alignment Line

STATION	FG Elev.	Distance (Lt)	CL Elev.	Distance (Rt)	FG Elev.
10+6.28	–	0	56.74	2.00	56.67
10+10	57.10	13.00	56.84	2.00	56.80
10+11.51	57.25	18.29	56.88	2.00	56.84
10+15	57.32	17.29	56.98	2.00	56.95
10+20	57.46	15.86	57.14	2.00	57.10
10+25	57.63	14.43	57.34	2.00	57.26
10+30	57.71	13.00	57.50	2.00	57.52
10+35	57.81	11.57	57.51	2.00	57.54
10+40	57.59	10.14	–	2.33	57.34
10+45	56.64	1.65	–	2.40	56.86
10+46.89	56.51	1.65	–	2.37	56.68
10+49.60	56.30	1.65	–	2.47	56.44
10+50	56.27	1.65	–	2.52	56.41
10+52.32	56.09	1.65	–	2.74	56.23
10+55	55.86	1.65	–	2.93	56.08
10+60	55.40	1.65	–	2.84	56.68
10+65	54.90	1.65	–	2.92	55.21
10+66.67	54.71	1.65	–	3.12	55.12
10+71.2	CONFORM				

W2 Alignment Line

STATION	FG Elev.	Distance (Lt)	CL Elev.	Distance (Rt)	FG Elev.
10+14.59	–	–	–	3.50	54.71
10+15.91	–	–	–	3.50	54.78
10+19.71	55.40	1.03	–	3.50	55.08
10+20	55.45	1.32	–	3.50	55.11
10+23.23	55.86	4.75	–	3.50	55.43
10+25	56.09	6.85	–	3.50	55.61
10+26.46	56.27	8.73	–	3.50	55.75
10+27.45	56.27	8.50	–	3.50	55.83
10+28.13	55.87	5.97	–	3.50	55.70
10+29.15	55.64	4.74	–	3.50	55.49
10+30	55.48	4.14	–	3.50	55.32
10+32.45	55.00	4.90	–	3.50	54.83
10+35	54.49	4.90	–	3.50	54.32
10+40	53.49	4.90	–	3.50	53.32
10+40.48	53.39	4.90	–	3.50	53.23
10+45	53.20	8.76	–	3.50	52.96
10+50	52.99	13.02	–	3.50	52.66
10+55	52.77	17.29	–	3.50	52.36
10+56.64	52.66	18.70	–	3.50	52.21
10+60.48	52.38	14.20	–	3.50	52.03
10+61.60	52.21	12.90	–	3.50	51.88

CONTRACT NO. 04-0120R4

CONTRACT CHANGE ORDER NO 182 S1

SHEET 2 OF 6

Dist	COUNTY	ROUTE	KILOMETER POST TOTAL PROJECT	SHEET No.	TOTAL SHEETS
04	SF	80	12.6/13.2		

REGISTERED CIVIL ENGINEER — 3-26-09 DATE

PLANS APPROVAL DATE

Rafael A. Ravelo — No. 68941 — Exp. 12-31-09 — CIVIL — REGISTERED PROFESSIONAL ENGINEER — STATE OF CALIFORNIA

THE STATE OF CALIFORNIA OR ITS OFFICERS OR AGENTS SHALL NOT BE RESPONSIBLE FOR THE ACCURACY OR COMPLETENESS OF ELECTRONIC COPIES OF THIS PLAN SHEET.

CONTRACT CHANGE ORDER NO. 18251
SHEET 3 OF 6

NOTES:

1. DIMENSIONS OF THE STRUCTURAL SECTIONS ARE SUBJECT TO TOLERANCES SPECIFIED IN THE STANDARD SPECIFICATIONS.
2. FOR LIMITS OF Temp RAILING (TYPE K), CCSF SIDEWALK, CCSF CURB, AND CL FENCE, SEE L-SHEET.

TYPICAL STRUCTURAL SECTIONS:

[1] 100 mm HMA(A)
150 mm Cl 3 AB

[2] 30 mm HMA(A)

ABBREVIATIONS:

HMA(A) HOT MIX ASPHALT (TYPE A)

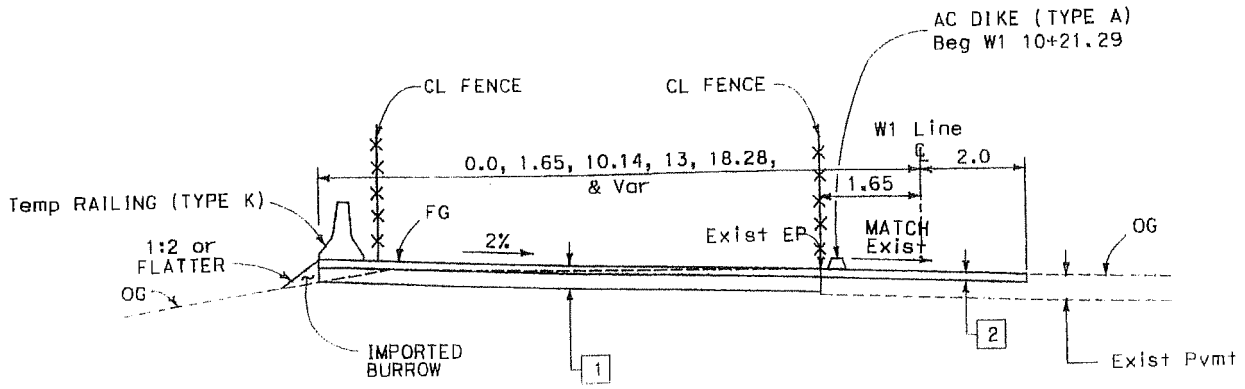

W1 10+6.28 TO 10+40

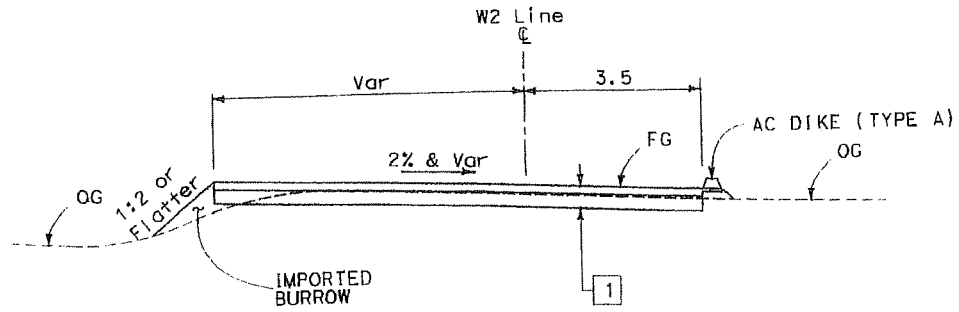

W2 10+27.45 TO 10+32.45

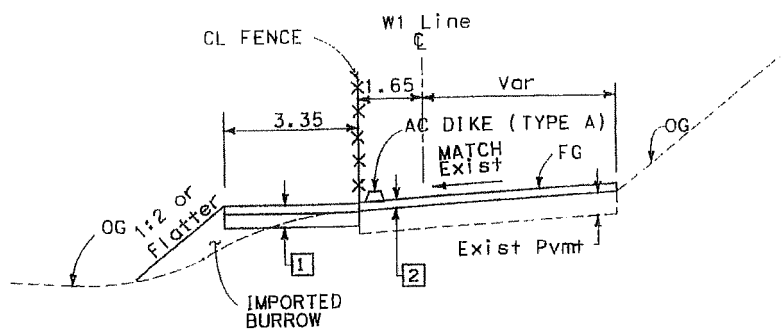

W1 10+40 TO 10+46.89

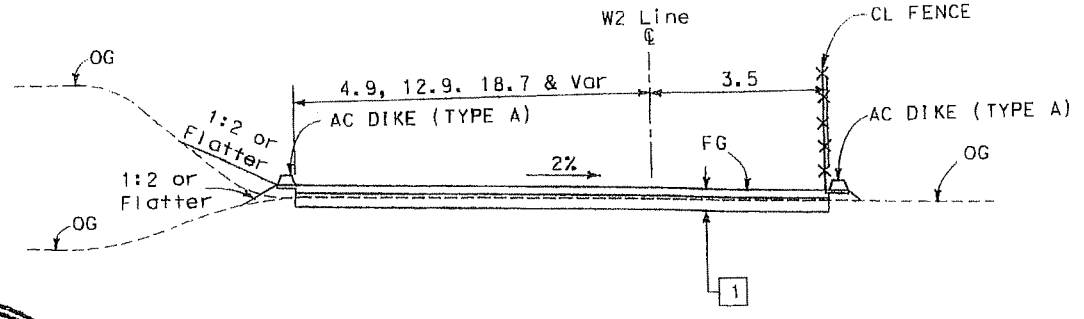

W2 10+32.45 TO 10+61.88

REGISTERED PROFESSIONAL ENGINEER — ALEC MELKONIANS — CO53452 — Exp. 6/30/11 — CIVIL — STATE OF CALIFORNIA

ALL DIMENSIONS ARE IN METERS UNLESS OTHERWISE SHOWN

TYPICAL CROSS SECTIONS

NO SCALE

X-1

REVISED BY	DATE REVISED

CALCULATED-DESIGNED BY
CHECKED BY
FUNCTIONAL SUPERVISOR: JAIME GUTIERREZ

STATE OF CALIFORNIA - DEPARTMENT OF TRANSPORTATION
DESIGN

LAST REVISION DATE PLOTTED => $DATE
TIME PLOTTED => $TIME

BORDER LAST REVISED 3/1/2007

RELATIVE BORDER SCALE IS IN MILLIMETERS 0 20 40 60 80

USERNAME => $USER
DGN FILE => $REQUEST

CU 04251 EA 0120R1

FOR COMPLETE RIGHT OF WAY AND ACCURATE ACCESS DATA, SEE RIGHT OF WAY RECORD MAPS AT DISTRICT OFFICE.

CONTRACT CHANGE ORDER NO. 18251
SHEET 4 OF 6

Dist	COUNTY	ROUTE	KILOMETER POST TOTAL PROJECT	SHEET No.	TOTAL SHEETS
04	SF	80	12.6/13.2		

Caltrans Metric

3-22-09
REGISTERED CIVIL ENGINEER DATE

PLANS APPROVAL DATE

REGISTERED PROFESSIONAL ENGINEER Rafael A. Ravelo No. 68941 Exp. 12-31-09 CIVIL STATE OF CALIFORNIA

THE STATE OF CALIFORNIA OR ITS OFFICERS OR AGENTS SHALL NOT BE RESPONSIBLE FOR THE ACCURACY OR COMPLETENESS OF ELECTRONIC COPIES OF THIS PLAN SHEET.

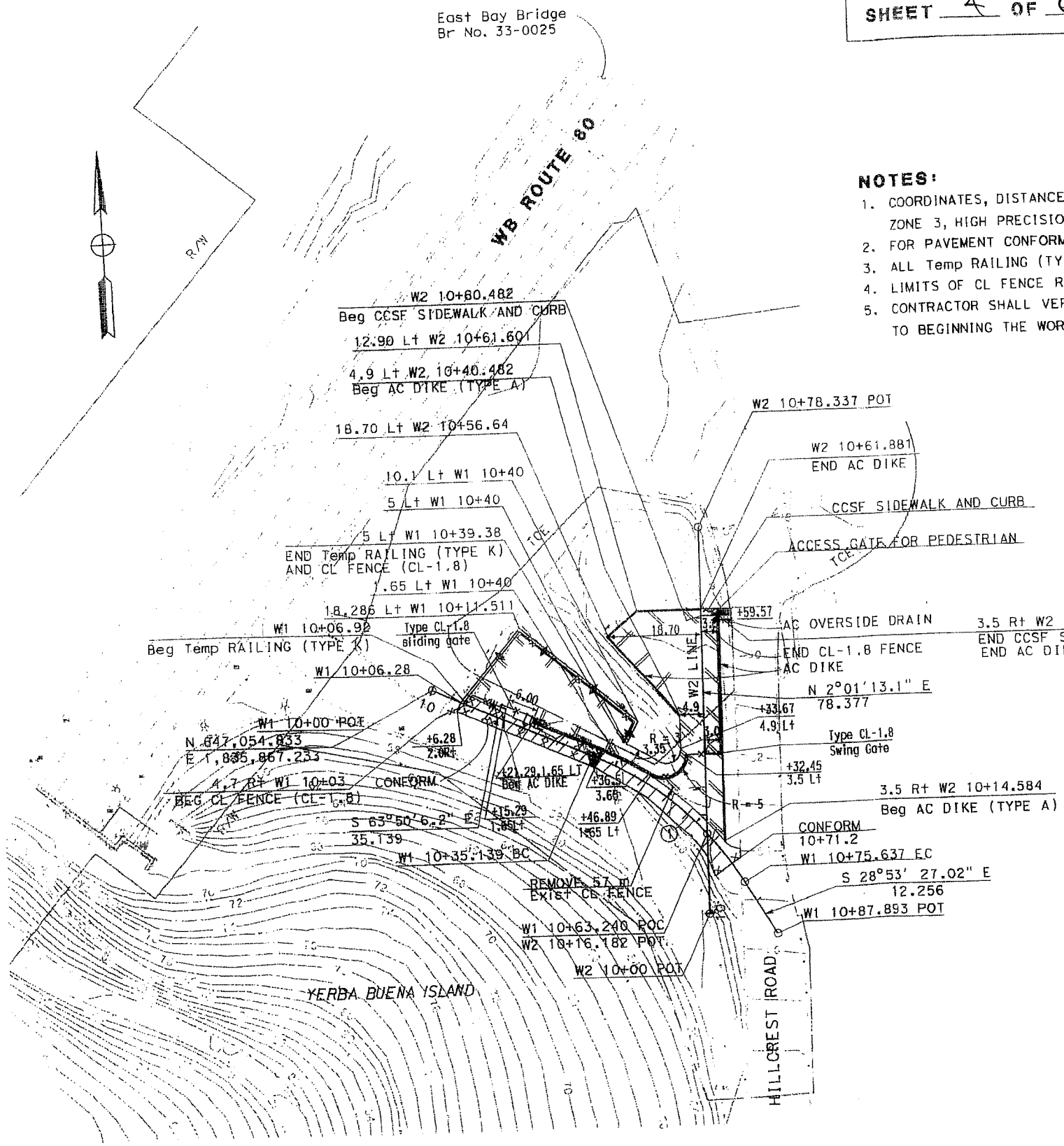

NOTES:

1. COORDINATES, DISTANCES AND BEARINGS ARE ON CCS'83, ZONE 3, HIGH PRECISION GEODETIC NETWORK (1991.35 EPOCH).
2. FOR PAVEMENT CONFORM DETAILS, SEE C-SHEET.
3. ALL Temp RAILING (TYPE K) SHALL BE DOWELED, SEE C-SHEET.
4. LIMITS OF CL FENCE REMOVAL AS DIRECTED BY THE ENGINEER.
5. CONTRACTOR SHALL VERIFY ALL CONTROLLING DIMENSIONS PRIOR TO BEGINNING THE WORK.

LEGEND:

- AC OVERLAY (25 mm Min)
- Parking Pvmt Limit
- x x x GRIND AC Pavement
- TEMPORARY RAILING (TYPE K)

CURVE DATA

No.	R	Δ	T	L	N-Coordinate	E-Coordinate
①	66.402	34°56'39''	20.901	40.498	646979.741	1835869.491

REGISTERED PROFESSIONAL ENGINEER ALEC MELKONIANS CO53452 Exp. 6/30/11 CIVIL STATE OF CALIFORNIA

ALL DIMENSIONS ARE IN METERS UNLESS OTHERWISE SHOWN

LAYOUT

SCALE: 1:500

L-1

REVISED BY	DATE REVISED

CALCULATED-DESIGNED BY
CHECKED BY

FUNCTIONAL SUPERVISOR: JAIME GUTIERREZ

STATE OF CALIFORNIA - DEPARTMENT OF TRANSPORTATION
Caltrans
DESIGN

RELATIVE BORDER SCALE IS IN MILLIMETERS 0 20 40 60 80

USERNAME => $USER
DGN FILE => $REQUEST

CU 04251

EA 0120R1

LAST REVISION DATE PLOTTED => $DATE
TIME PLOTTED => $TIME

Dist	COUNTY	ROUTE	KILOMETER POST TOTAL PROJECT	SHEET No.	TOTAL SHEETS
04	SF	80	12.6/13.2		

REGISTERED CIVIL ENGINEER — 3-22-09 DATE

Rafael A. Ravelo No. 68941 Exp. 12-31-09 CIVIL — REGISTERED PROFESSIONAL ENGINEER — STATE OF CALIFORNIA

PLANS APPROVAL DATE

THE STATE OF CALIFORNIA OR ITS OFFICERS OR AGENTS SHALL NOT BE RESPONSIBLE FOR THE ACCURACY OR COMPLETENESS OF ELECTRONIC COPIES OF THIS PLAN SHEET.

CONTRACT CHANGE ORDER NO. 18251
SHEET 5 OF 6

Caltrans Metric

REVISED BY | DATE REVISED

CALCULATED-DESIGNED BY | CHECKED BY

STATE OF CALIFORNIA - DEPARTMENT OF TRANSPORTATION

Caltrans DESIGN

FUNCTIONAL SUPERVISOR

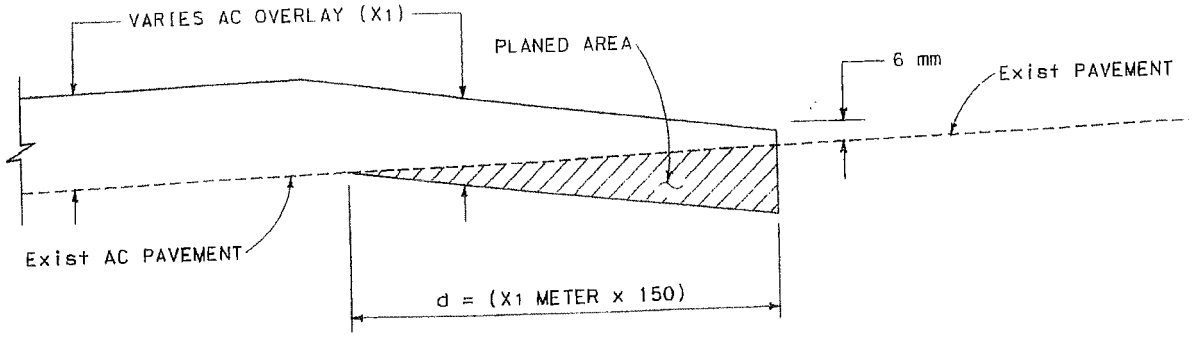

PAVING CONFORM DETAIL

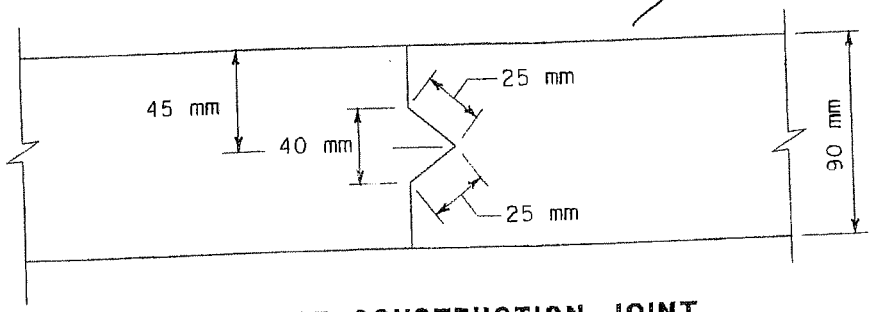

TRANSVERSE CONSTRUCTION JOINT FOR CONCRETE SIDEWALK (TYPE CCSF)

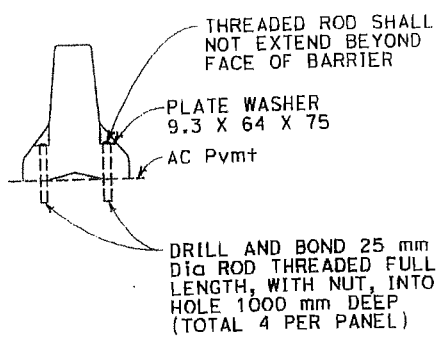

DOWELING DETAIL

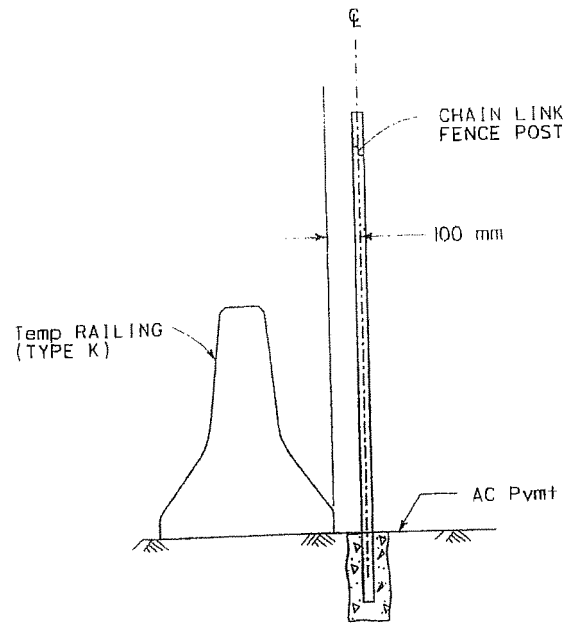

FENCE DETAIL

TEMPORARY RAILING (TYPE K)

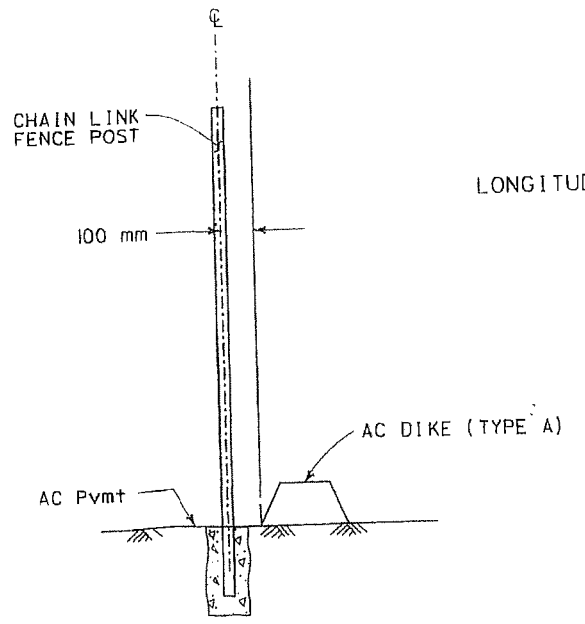

AC DIKE AND FENCE

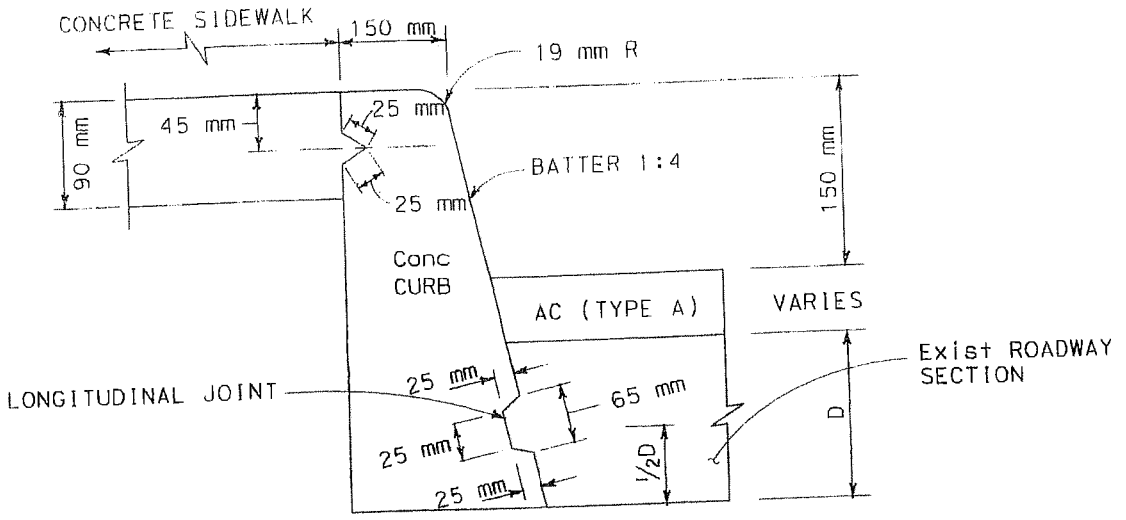

CONCRETE CURB (TYPE CCSF) AND CONCRETE SIDEWALK (TYPE CCSF)

ALL DIMENSIONS ARE IN METERS UNLESS OTHERWISE SHOWN

CONSTRUCTION DETAILS

NO SCALE

C-1

LAST REVISION DATE PLOTTED => @DATE
TIME PLOTTED => @TIME

RELATIVE BORDER SCALE IN MILLIMETERS 0 20 40 60 80

USERNAME => @USER
DGN FILE => @REQUEST

CU 04251 | EA 0120R1

DIST	COUNTY	ROUTE	POST MILES TOTAL PROJECT	SHEET NO.	TOTAL SHEETS
04	SF	80	12.6/13.2		

REGISTERED CIVIL ENGINEER

PLANS APPROVAL DATE

The State of California or its officers or agents shall not be responsible for the accuracy or completeness of electronic copies of this plan sheet.

REGISTERED PROFESSIONAL ENGINEER — No. — Exp. — CIVIL — STATE OF CALIFORNIA

REGISTERED PROFESSIONAL ALEC MELKONIANS CO58452 Exp. 6/30/11 CIVIL STATE OF CALIFORNIA

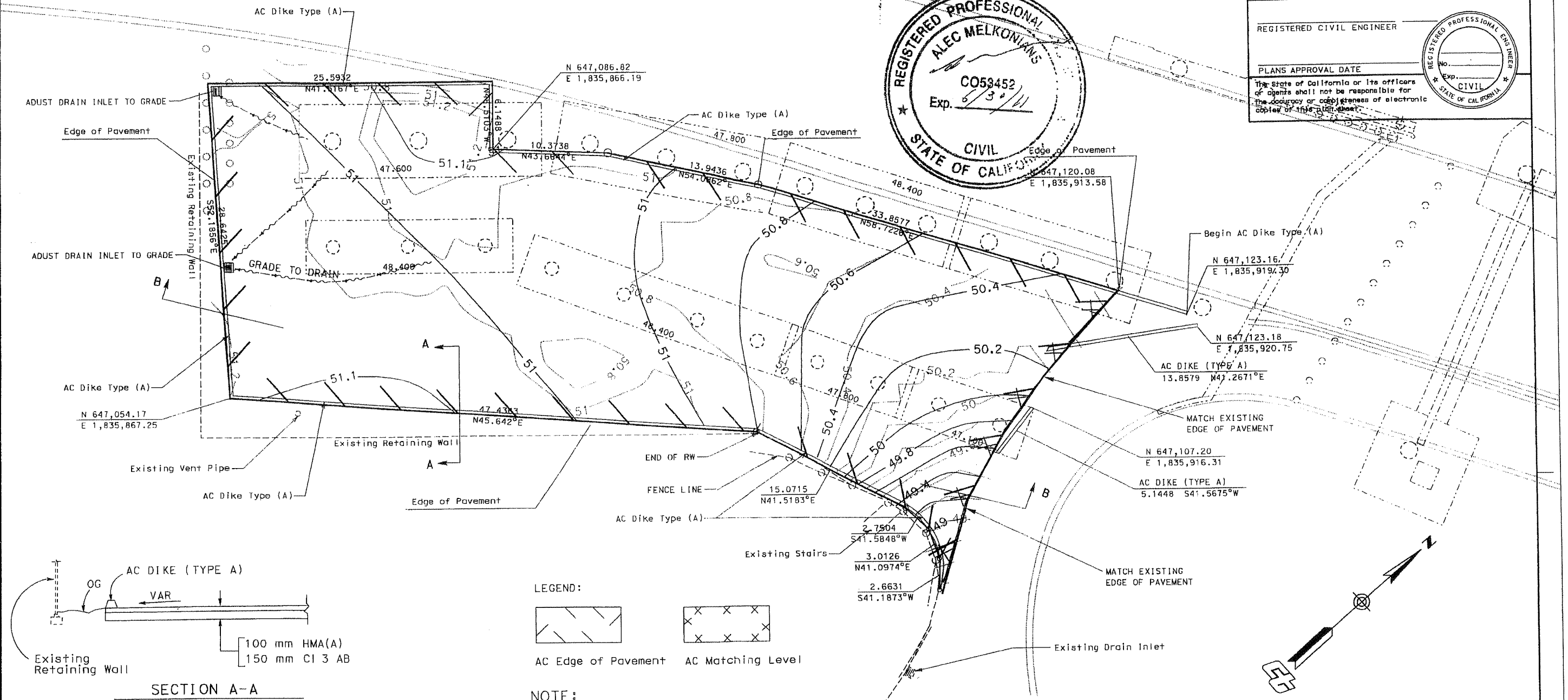

SECTION A-A
(Typical - No Scale)

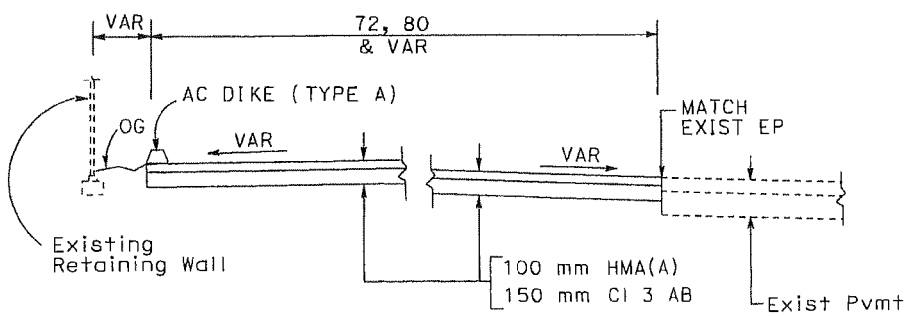

SECTION B-B
(Typical - No Scale)

LEGEND:

AC Edge of Pavement — AC Matching Level

NOTE:

1) All utility vaults and Drainage Inlets shall be adjusted to new pavement grade or as directed by the engineer
2) Final grading for drainage to inlets and dikes shall not be less than 2% or shall be determined by the engineer.

ITEM DESCRIPTION	QUANTITY	UNIT
PLACE AGGREGATE BASE	286	M3
PLACE AC PAVEMENT	454	TONNES
INSTALL NEW AC DIKE	215	M
ADJUST DRAIN INLET TO GRADE	2	EA

CONTRACT NO. YERBA BUENA ISLAND 04-0120R4

CONTRACT CHANGE ORDER NO 1825 1

SHEET 6 OF 6

YBI- TEMPORARY PARKING LOT AT TREASURE ISLAND RD. NEAR EASTBOUND ON-RAMP CONSTRUCTION DETAILS

ALL DIMENSIONS ARE IN METERS UNLESS OTHERWISE SHOWN

NO SCALE

C-1

DATE	REVISED BY	DATE REVISED
CALCULATED/ DESIGNED BY	CHECKED BY	

PROJECT ENGINEER

STATE OF CALIFORNIA - DEPARTMENT OF TRANSPORTATION
Caltrans PROJECT DEVELOPMENT

LAST REVISION 02-03-09 | DATE PLOTTED => 08-FEB-2010 | TIME PLOTTED => 18:08

FOR REDUCED PLANS ORIGINAL 0 1 2 3 | USERNAME => s118535 | CU | EA 0120R4

STATE OF CALIFORNIA - DEPARTMENT OF TRANSPORTATION

CONTRACT CHANGE ORDER MEMORANDUM

TO: MIKE FORNER / DEANNA VILCHECK	FILE: **E.A.** 04 - 0120R4
	CO-RTE-PM SF-80-12.6/13.2
FROM: BILL CASEY	**FED. NO.**
CCO#: **182** SUPPLEMENT#: **1** Category Code: **CGAC**	CONTINGENCY BALANCE (incl. this change) **$41,064,404.59**
COST: **$220,000.00** INCREASE ☑ DECREASE ☐	HEADQUARTERS APPROVAL REQUIRED? ☑ YES ☐ NO
SUPPLEMENTAL FUNDS PROVIDED: **$0.00**	IS THIS REQUEST IN ACCORDANCE WITH ENVIRONMENTAL DOCUMENTS? ☑ YES ☐ NO
CCO DESCRIPTION: USCG Additional Parking & Revised Plans	**PROJECT DESCRIPTION:** CONSTRUCT ROUTE 80 TEMP BYPASS STRUCTURE

Original Contract Time:	Time Adj. This Change:	Previously Approved CCO Time Adjustments:	Percentage Time Adjusted: (including this change)	Total # of Unreconciled Deferred Time CCO(s): (including this change)
475 Day(s)	**0** Day(s)	**1660** Day(s)	**349** %	**0**

THIS CHANGE ORDER PROVIDES FOR:

The construction of an additional parking area for the adjacent US Coast Guard facility and revisions to the parking area added under the original Change Order No. 182.

This project was awarded in March 2004 to construct a detour that will allow for the tie in of the new east span of the San Francisco Oakland Bay Bridge to Yerba Buena Island. The detour encompasses three main structures, the East Tie-In to the existing bridge, the West Tie-In (WTI) to Yerba Buena Island and the Viaduct structure between the two tie ins. The original contract completion date was July 2005.

Two separate Department strategy memorandums issued on December 14, 2006 entitled 'Strategy for South-South Detour Contract Completion' and December 25, 2006 entitled 'Recommendation to Construct Select Yerba Buena Island Transition Structure Foundations by Contract Change Order' were approved by Tony Anziano - Toll Bridge Program Manager, Richard Land - Chief Engineer, and the Toll Bridge Program Oversight Committee (TBPOC), recommended that the Department assume responsibility for the designs of the East Tie-In (ETI) and West Tie-In (WTI) portions of this contract, and incorporated seismic retrofit work of the permanent Yerba Buena Island Transition Structure (YBITS) onto this project. The approval of these strategy memorandums extended the project completion date approximately 5 years.

The contract has now been extended to December of 2010 due to over 5 years of Department delays. This delay has had significant impacts on the adjacent US Coast Guard facility whose main access runs directly through the project work site and who also vacated certain parking areas in order to provide access to the site. Project Development has now requested that an additional parking area be constructed for the Coast Guard in order to mitigate the disruptions caused by the extensive delay to the project.

Project Development has now issued revised plan sheets for this work. The original change order provided for the construction of 2 parking areas along with the construction of concrete sidewalks that connect the parking areas to the Coast Guard base. This change provides revised plan sheets for these 2 areas and adds an addition parking area. The work also includes grading of the lots, the placement of temporary k-rail, AC dike and chain link fencing and the maintenance of the parking areas over the remaining duration of this project.

Compensation for the additional cost of constructing the parking areas due to the revisions provided under this supplement shall be paid as an extra work at force account at an estimated cost of $220,000.00 which shall be financed from the contract's contingency funds. A cost estimate is on file.

No adjustment of contract time is warranted as the work will not affect the controlling operation.

This change was requested by Alec Melkonians - Asst. Project Manager per Memorandum dated May 27, 2009 and concurred with by Minh B. Nguyen - Project Engineer, and Lina Ellis - Maintenance.

ADA Notice: For individuals with sensory disabilities, this document is available in alternate formats. For information call: (916) 654-6410 or TDD (916) 654-3880 or write Records and Forms Management, 1120 N Street, MS-89, Sacramento, CA 95814.

CONCURRED BY:		
Construction Engineer:	for Bill Casey, Resident Engineer	Date 2/11/10
Bridge Engineer:		Date
Project Engineer:	Minh B. Nguyen, PE	Date 2/11/10
Project Manager:	Alec Melkonians	Date 2/10/10
FHWA Rep.:		Date
Environmental:		Date
Other (specify):	Jeannie Balderramos	Date 2-10-10
Other (specify):		Date
District Prior Approval By:		Date
HQ (Issue Approve) By:	Larry Salhaney, HQ CCO Engine	Date 2/16/10
Resident Engineer's Signature:		Date
		2/11/10

ESTIMATE OF COST

	THIS REQUEST	TOTAL TO DATE
ITEMS	$0.00	$0.00
FORCE ACCOUNT	$220,000.00	$400,000.00
AGREED PRICE	$0.00	$0.00
ADJUSTMENT	$0.00	$0.00
TOTAL	$220,000.00	$400,000.00

FEDERAL PARTICIPATION

☐ PARTICIPATING ☐ PARTICIPATING IN PART ☑ NONE
☐ NON-PARTICIPATING (MAINTENANCE) ☐ NON-PARTICIPATING

FEDERAL SEGREGATION (if more than one Funding Source or P.I.P. type)
☐ CCO FUNDED PER CONTRACT ☐ CCO FUNDED AS FOLLOWS

FEDERAL FUNDING SOURCE	PERCENT

ADA Notice: For individuals with sensory disabilities, this document is available in alternate formats. For information call: (916) 654-6410 or TDD (916) 654-3880 or write Records and Forms Management, 1120 N Street, MS-89, Sacramento, CA 95814.

CONTRACT CHANGE ORDER

Change Requested by: Engineer

CCO: 182	Suppl. No. 2	Contract No. 04 - 0120R4	Road SF-80-12.6/13.2	FED. AID LOC.:

To: CC MYERS INC

You are directed to make the following changes from the plans and specifications or do the following described work not included in the plans and specifications for this contract. ***NOTE: This change order is not effective until approved by the Engineer.***

Description of work to be done, estimate of quantities and prices to be paid. (Segregate between additional work at contract price, agreed price and force account.) Unless otherwise stated, rates for rental of equipment cover only such time as equipment is actually used and no allowance will be made for idle time. This last percentage shown is the net accumulated increase or decrease from the original quantity in the Engineer's Estimate.

Extra Work at Force Account:

Furnish and install all concrete barrier (Type K) and signing, an electric pedestrian gate with a card reader to access the parking lot, a manual pedestrian gate to access the Q8 housing, and power to all the electrical gates as shown on Sheet No. 2 of this change order and as determined by the Engineer.

Estimated cost of Extra Work at Force Account $100,000.00

Extra Work at Lump Sum:

Furnish and install the chain link fence (Type CL-3.0) with 3 strands of barbed wire, furnish and install the vehicle swing gate (6M) with opener and card reader, furnish and install the pedestrian swing gate to access the electrical vault and remove and place all pavement delineation on Hillcrest Road as shown on Sheet No. 2 (Plan Sheet C-2) of this change order.

Furnish and install the adiem crash cushion adjacent to the parking lot between Hillcrest Road and the westbound I-80 off ramp as shown on Sheet No. 2 (Plan Sheet C-2) of this change order.

Furnish and install all lighting including all appurtenances for the stairway accessing the parking lot between Hillcrest Road and the westbound I-80 off ramp as shown on Sheet No. 3 through 6 (Plan Sheets E-1 through E-4) of this change order.

For this work, the Contractor shall be compensated a lump sum of $150,950.00. Except for providing any traffic control required for this work, this sum constitutes full and final compensation, including all markups, for the work specified. Traffic control required for this work shall be paid as extra work at force account under this change order.

Extra Work at Agreed Lump Sum $150,950.00

Estimated Cost: **Increase** ☑ **Decrease** ☐ **$250,950.00**

By reason of this order the time of completion will be adjusted as follows: 0 days

Submitted by		
Signature Jeannie Balderramos	**Resident Engineer** JEANNIE BALDERRAMOS	**Date** 5-17-10
Approval Recommended by		
Signature Deanna Vilcheck	**Area Construction Manager** DEANNA VILCHECK	**Date** 5/17/10
Engineer Approval by		
Signature Deanna Vilcheck	**Area Construction Manager** DEANNA VILCHECK	**Date** 6/14/10

We the undersigned contractor, have given careful consideration to the change proposed and agree, if this proposal is approved, that we will provide all equipment, furnish the materials, except as may otherwise be noted above, and perform all services necessary for the work above specified, and will accept as full payment therefor the prices shown above.

NOTE: If you, the contractor, do not sign acceptance of this order, your attention is directed to the requirements of the specifications as to proceeding with the ordered work and filing a written protest within the time therein specified.

Contractor Acceptance by		
Signature	**(Print name and title)** **Daniel E. Himick, President**	**Date** 5/28/10

DIST	COUNTY	ROUTE	POST MILES TOTAL PROJECT	SHEET NO.	TOTAL SHEETS
04	SF	80	12.6/13.2		

REGISTERED CIVIL ENGINEER

PLANS APPROVAL DATE

The State of California or its officers or agents shall not be responsible for the accuracy or completeness of electronic copies of this plan sheet.

REGISTERED PROFESSIONAL ENGINEER — No. — Exp. — CIVIL — STATE OF CALIFORNIA

DATE	REVISED BY	DATE REVISED

CALCULATED/DESIGNED BY

CHECKED BY

PROJECT ENGINEER

STATE OF CALIFORNIA - DEPARTMENT OF TRANSPORTATION

Caltrans PROJECT DEVELOPMENT

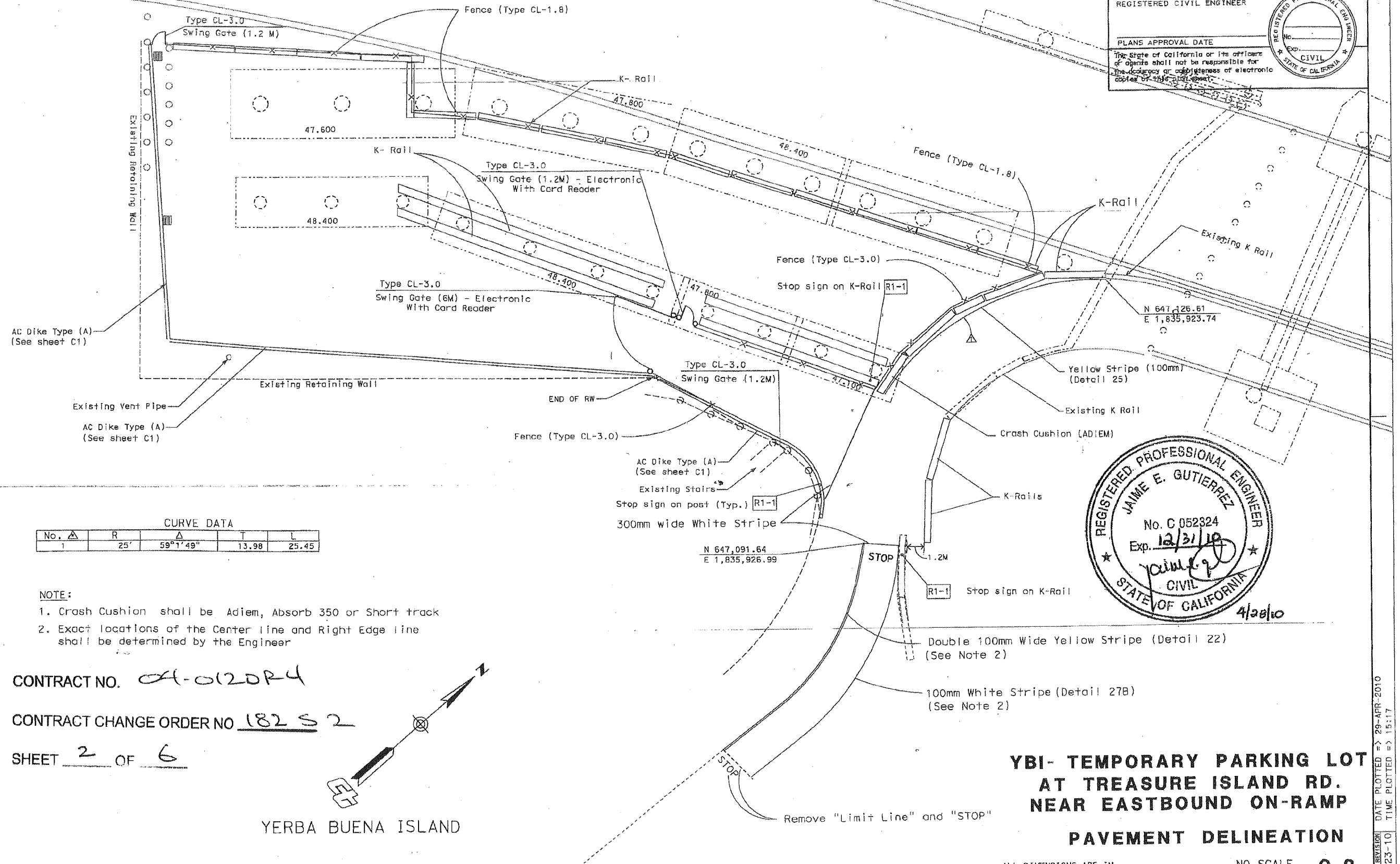

REGISTERED PROFESSIONAL ENGINEER — JAIME E. GUTIERREZ — No. C 052324 — Exp. 12/31/10 — CIVIL — STATE OF CALIFORNIA — 4/28/10

CURVE DATA

No. Δ	R	Δ	T	L
1	25'	59°1'49"	13.98	25.45

NOTE:

1. Crash Cushion shall be Adiem, Absorb 350 or Short track
2. Exact locations of the Center line and Right Edge line shall be determined by the Engineer

CONTRACT NO. 04-0120R4

CONTRACT CHANGE ORDER NO 182 S 2

SHEET 2 OF 6

YERBA BUENA ISLAND

YBI- TEMPORARY PARKING LOT AT TREASURE ISLAND RD. NEAR EASTBOUND ON-RAMP

PAVEMENT DELINEATION

ALL DIMENSIONS ARE IN METERS UNLESS OTHERWISE SHOWN

NO SCALE C-2

LAST REVISION 03-23-10

DATE PLOTTED => 29-APR-2010

TIME PLOTTED => 15:17

FOR REDUCED PLANS ORIGINAL SCALE IS IN INCHES 0 1 2 3

USERNAME => s118535

DGN FILE => SSD Temp Parking EB Onramp_C2_7.dgn

CU

EA 0120R4

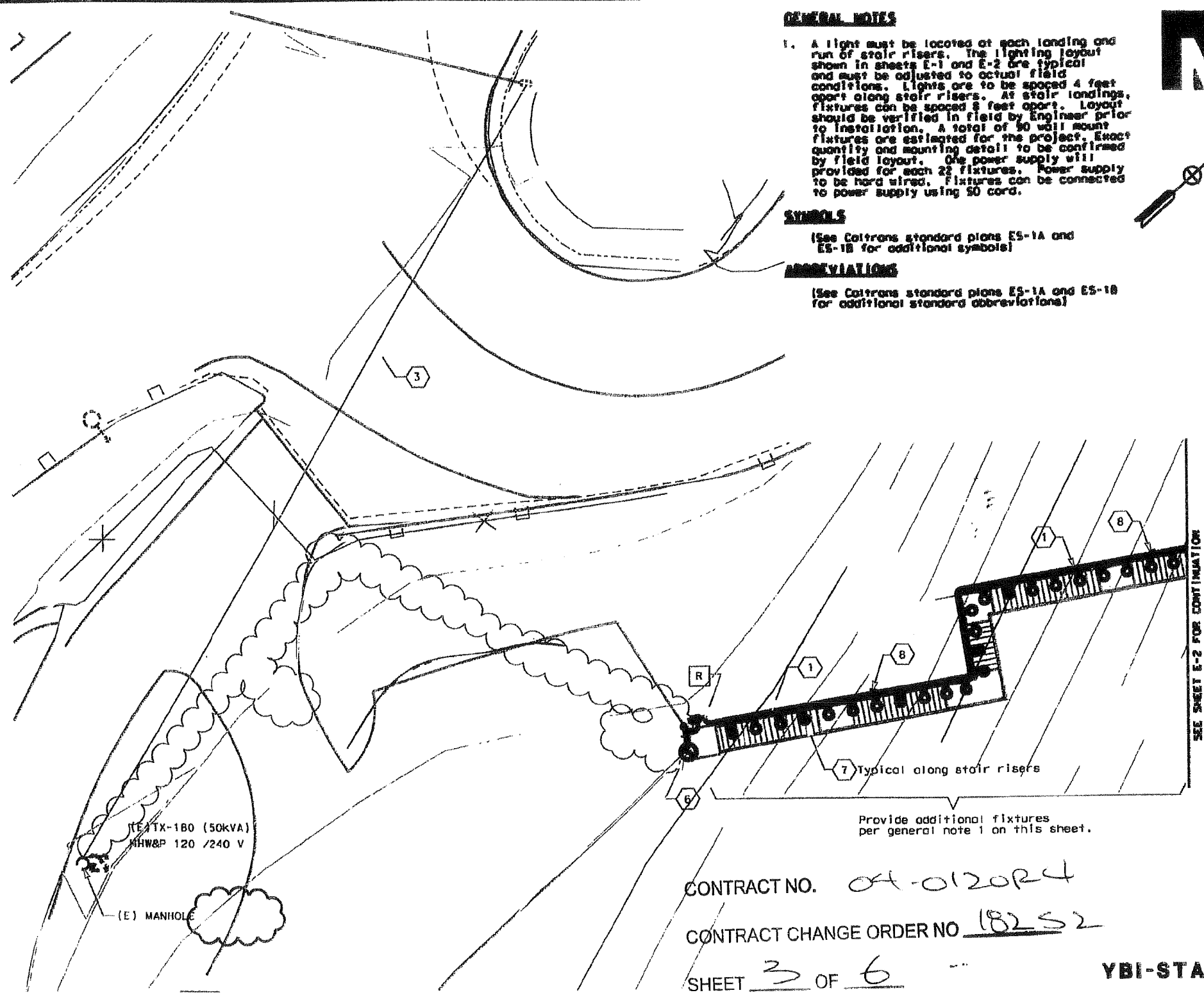

GENERAL NOTES

1. A light must be located at each landing and run of stair risers. The lighting layout shown in sheets E-1 and E-2 are typical and must be adjusted to actual field conditions. Lights are to be spaced 4 feet apart along stair risers. At stair landings, fixtures can be spaced 8 feet apart. Layout should be verified in field by Engineer prior to installation. A total of 90 wall mount fixtures are estimated for the project. Exact quantity and mounting detail to be confirmed by field layout. One power supply will provided for each 22 fixtures. Power supply to be hard wired. Fixtures can be connected to power supply using SO cord.

SYMBOLS

(See Caltrans standard plans ES-1A and ES-1B for additional symbols)

ABBREVIATIONS

(See Caltrans standard plans ES-1A and ES-1B for additional standard abbreviations)

NOTES:

1. Reference:

-for Stairway lighting diagram, see E-3.

SHEET NOTES:

1. Install and route new 41C (type 1 conduit) with 2 #6 (120 V Lighting) along the outside face of existing stringer. Provide conduit support every 1.5 M (maximum).
2. Not used.
3. Existing 91c, 3 #2/0 (120/240 V, Lighting)
4. Not used.
5. Not used.
6. Install shoebox light pole with rectilinear arm-mounted luminaire on 7.6 M high, 102 mm straight square steel pole with flat lens for full cutoff performance. type III distribution. 100 watt pulse start metal halide lamp with electronic ballast. Provide with locking photo control receptacle with photocontrol. Fixture dimensions are 254mm high x 457mm square, (120) volts. Fixture equal to EMCO #ECA18-T-3H-100PSE-120-BRP-PCT. Pole equal to EMCO #SSS-20-4-11-D1-BRP. See mounting detail on E-4.
7. Furnish and install with spacing per general note 1, 102 mm diameter surface mounted low voltage LED step light with aluminum housing and satin etched tempered soda lime diffuser. 1.5 watts, 12 V. Finish color to be selected by USCG. Similar to "Kitchler #15764AZT. Coordinate with USCG and the Engineer exact mounting height and mounting detail.
8. Furnish and install 318 mm(L) x 140mm(W) x 133mm(D) 300 W, (120) V-12 V outdoor rated transformer with textured bronze finish. Similar to "Kichler #15TPE300AZT. Locate transformer equally spaced along the length of the stairs.

DIST	COUNTY	ROUTE	KILOMETER POST TOTAL PROJECT	SHEET No	TOTAL SHEETS
04	SF	80	12.6		

REGISTERED ELECTRICAL ENGINEER — DATE 04/27/10

PLANS APPROVAL DATE

PB Americas, Inc.
303 Second St., Suite 700N
San Francisco, CA 94107-1317

SILVERMAN & LIGHT
1201 PARK AVENUE - SUITE 100
EMERYVILLE, CA 94608-3632

The State of California or its officers or agents shall not be responsible for the accuracy or completeness of electronic copies of this plan sheet.

Caltrans now has a web site! To get to the web site, go to http://www.dot.ca.gov

CONTRACT NO. 04-0120R4

CONTRACT CHANGE ORDER NO 18252

SHEET 3 OF 6

YBI-STAIRWAY AT QUARTERS 9
LIGHTING
SCALE: 1:100

E-1

THIS PLAN ACCURATE FOR ELECTRICAL WORK ONLY

ALL DIMENSIONS ARE IN METERS UNLESS OTHERWISE SHOWN

FOR REDUCED PLANS ORIGINAL SCALE IS IN MILLIMETERS 0 20 40 60 80

DGN FILE => $REQUEST
USERNAME => $USER

CU 04251 | EA 0120R4

DATE PLOTTED => $DATE
TIME PLOTTED => $TIME

00-00-00

CALCULATED/DESIGNED BY BJ | DATE | REVISED BY
CHECKED BY CL | DATE REVISED

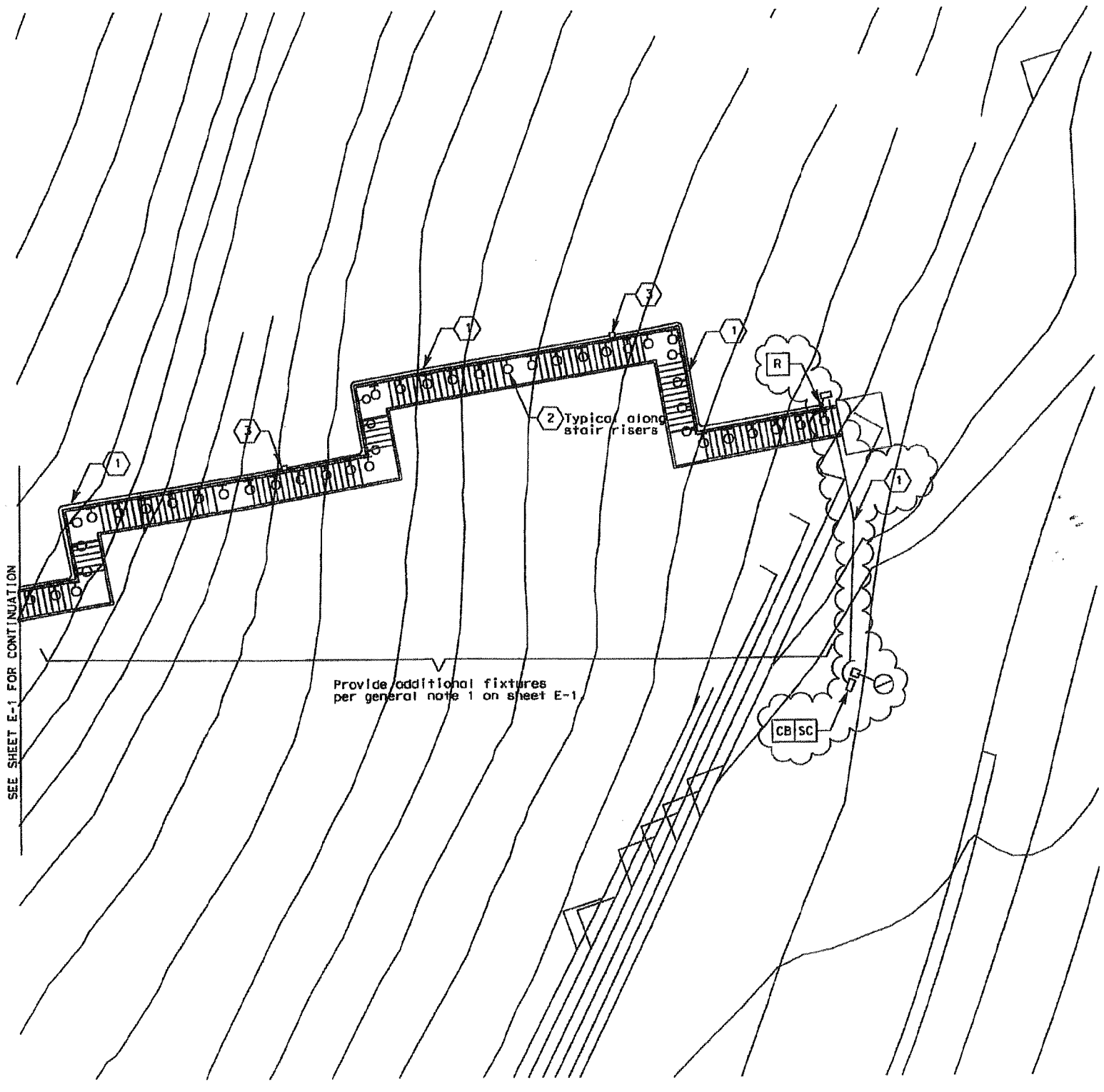

DIST	COUNTY	ROUTE	KILOMETER POST TOTAL PROJECT	SHEET No.	TOTAL SHEETS
04	SF	80	12.6		

REGISTERED ELECTRICAL ENGINEER — 04/27/10 DATE

CAROL LIGHT
No. 10145
Exp. 09/30/10
ELECTRICAL
REGISTERED PROFESSIONAL ENGINEER
STATE OF CALIFORNIA

PLANS APPROVAL DATE

PB Americas, Inc.
303 Second St., Suite 700N
San Francisco, CA 94107-1317

SILVERMAN & LIGHT
1201 PARK AVENUE - SUITE 100
EMERYVILLE, CA 94608-3632

The State of California or its officers or agents shall not be responsible for the accuracy or completeness of electronic copies of this plan sheet.

Caltrans now has a web site! To get to the web site, go to http://www.dot.ca.gov

NOTES:

1. Reference:

   -for Stairway lighting diagram, see E-3.

SHEET NOTES:

1 Install and route new 41C (type 1 conduit) with 2 #6 (120 V. Lighting) along the outside face of existing stringer. Provide conduit support every 1.5 M (maximum).

2 Furnish and install with spacing per general note 1, 102 mm diameter surface mounted low voltage LED step light with aluminum housing and satin etched tempered soda lime diffuser. 1.9 watts, 12 V. Finish color to be selected by USCG. Similar to "Kichler #15764AZT. Coordinate with USCG and the Engineer exact mounting height and mounting detail.

3 Furnish and install 318 mm(L) x 140mm(W) x 133mm(D) 300 W, (120)V-12 V outdoor rated transformer with textured bronze finish. Similar to "Kichler #15TPE300AZT. Locate transformer equally spaced along the length of the stairs.

CONTRACT NO. 04-0120R4

CONTRACT CHANGE ORDER NO 18252

SHEET 4 OF 6

YBI-STAIRWAY AT QUARTERS 9
LIGHTING
SCALE: 1:100

E-2

STATE OF CALIFORNIA - DEPARTMENT OF TRANSPORTATION
Caltrans

DESIGN OVERSIGHT

CALCULATED/ DESIGNED BY: BJ
CHECKED BY: CL

DATE	REVISED BY
	DATE REVISED

LAST REVISION 00-00-00 — DATE PLOTTED => #DATE — TIME PLOTTED => #TIME

THIS PLAN ACCURATE FOR ELECTRICAL WORK ONLY

ALL DIMENSIONS ARE IN METERS UNLESS OTHERWISE SHOWN

FOR REDUCED PLANS ORIGINAL SCALE IS IN MILLIMETERS (0 20 40 60 80)

DGN FILE => &REQUEST
USERNAME => &USER

CU 04251

EA 0120R4

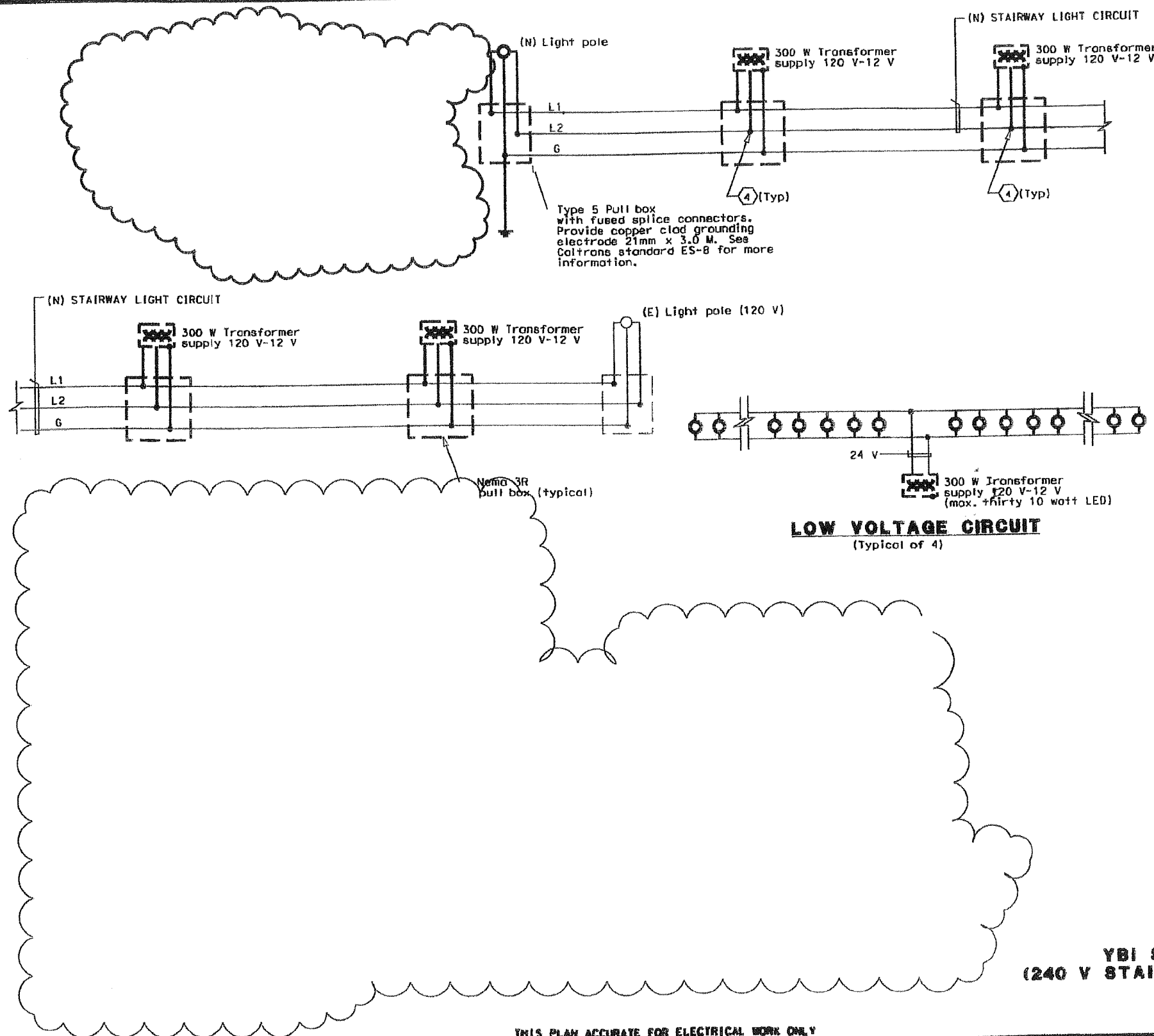

LOW VOLTAGE CIRCUIT
(Typical of 4)

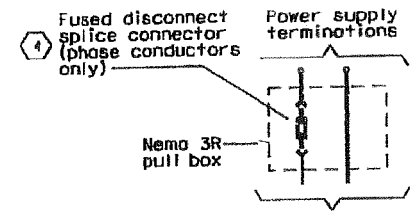

DETAIL-1
(TYP. FOR EACH LOW VOLTAGE POWER SUPPLY)

SHEET NOTES:

1. For lighting fixtures locations, see plan lighting layout. Refer to sheets E-1 and E-2.
2. #12 AWG single conductors.
3. Conductors spliced inside Nema 3R pull box located on the outside face of stringer.
4. For type and size of in line fusing, see Caltrans Standard plans. Locate inside bike path lighting housing.

DIST	COUNTY	ROUTE	KILOMETER POST TOTAL PROJECT	SHEET No	TOTAL SHEETS
04	SF	80	12.6		

REGISTERED ELECTRICAL ENGINEER — DATE 04/27/10

PLANS APPROVAL DATE

PB Americas, Inc.
303 Second St., Suite 700N
San Francisco, CA 94107-1317

SILVERMAN & LIGHT
1201 PARK AVENUE - SUITE 100
EMERYVILLE, CA 94608-3632

The State of California or its officers or agents shall not be responsible for the accuracy or completeness of electronic copies of this plan sheet.

Contents may not be a web site file but in the web site, go to http://www.dot.ca.gov

CONTRACT NO. 04-0120R4

CONTRACT CHANGE ORDER NO 182 S2

SHEET 5 OF 6

DETAILS
YBI STAIRWAY AT QUARTERS 9
(240 V STAIRWAY LIGHTING WIRING DIAGRAM)
NO SCALE

E-3

THIS PLAN ACCURATE FOR ELECTRICAL WORK ONLY

FOR REDUCED PLANS ORIGINAL SCALE IS IN MILLIMETERS 0 20 40 60 80

DGN FILE => $REQUEST
USERNAME => $USER

CU 04251

EA 0120R4

DATE PLOTTED => $DATE
TIME PLOTTED => $TIME

00-00-00

DIST	COUNTY	ROUTE	KILOMETER POST TOTAL PROJECT	SHEET No	TOTAL SHEETS
04	SF	80	12.6		

REGISTERED ELECTRICAL ENGINEER — DATE 04/27/10

PLANS APPROVAL DATE

REGISTERED PROFESSIONAL ENGINEER — CAROL LIGHT — STATE OF CALIFORNIA

PB Americas, Inc.
303 Second St., Suite 700N
San Francisco, CA 94107-1317

SILVERMAN & LIGHT
1201 PARK AVENUE - SUITE 100
EMERYVILLE, CA 94608-3632

The State of California or its officers or agents shall not be responsible for the accuracy or completeness of electronic copies of this plan sheet.

Caltrans now has a web site. To get to the web site, go to http://www.dot.ca.gov

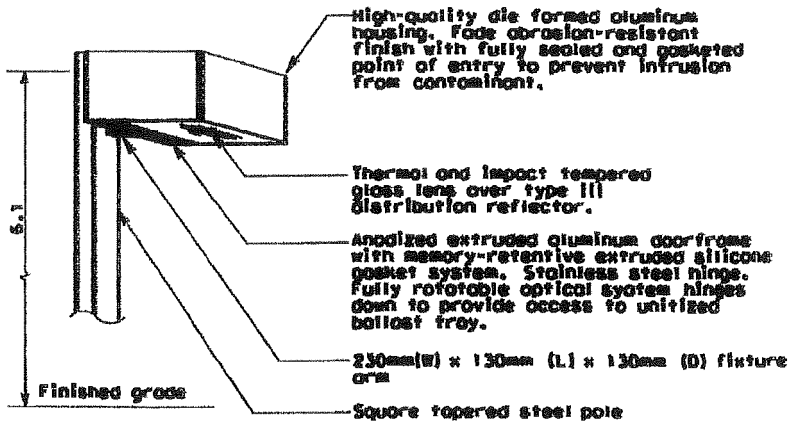

(1) POLE MOUNTED LUMINAIRE

(For pole base, see detail on this sheet)

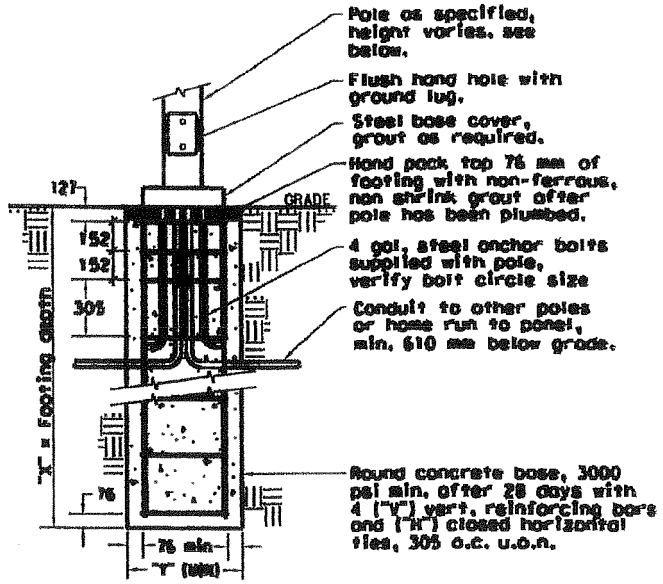

NOMINAL HEIGHT	POLE HEIGHT	BOLT CIRCLE	"H"	"V"	"X"	"Y"
6.1	6.1	241-279	#3	#4	1.5	610

(2) LIGHTING POLE BASE DETAIL

CONTRACT NO. 04-0120R4

CONTRACT CHANGE ORDER NO 182 S 2

SHEET 6 OF 6

ELECTRICAL DETAILS
LIGHTING LUMINAIRES

NO SCALE

E-4

THIS PLAN ACCURATE FOR ELECTRICAL WORK ONLY

ALL DIMENSIONS ARE IN MILLIMETERS UNLESS OTHERWISE SHOWN

FOR REDUCED PLANS ORIGINAL SCALE IS IN MILLIMETERS — 0 20 40 60 80

DGN FILE => $REQUEST
USERNAME => $USER

CU 04251 | EA 0120R4

DATE PLOTTED => $DATE
TIME PLOTTED => $TIME

00-00-00

CONTRACT CHANGE ORDER

Change Requested by: Engineer

CCO: 182	Suppl. No. 3	Contract No. 04 - 0120R4	Road SF-80-12.6/13.2	FED. AID LOC.:

To: **CC MYERS INC**

You are directed to make the following changes from the plans and specifications or do the following described work not included in the plans and specifications for this contract. ***NOTE: This change order is not effective until approved by the Engineer.***

Description of work to be done, estimate of quantities and prices to be paid. (Segregate between additional work at contract price, agreed price and force account.) Unless otherwise stated, rates for rental of equipment cover only such time as equipment is actually used and no allowance will be made for idle time. This last percentage shown is the net accumulated increase or decrease from the original quantity in the Engineer's Estimate.

Extra Work at Lump Sum:

Construct lighting improvements for the additional parking area south of the West Tie-In structure, which was provided under the original Change Order No. 182, and Supplements 1 and 2. Price includes all labor, equipment, and material costs to construct all conduits, conductors, light fixtures, pull boxes, and other items as shown on Sheets No. 2 through 3 of this change order.

For this work, the Contractor shall be compensated an agreed lump sum of $62,250.00 which constitutes full compensation, including all markups, for all costs associated with this change.

Cost of Extra Work at Agreed Lump Sum $62,250.00

Estimated Cost: Increase ☑ Decrease ☐ **$62,250.00**

By reason of this order the time of completion will be adjusted as follows: 0 days

Submitted by

Signature	Resident Engineer	Date
Jeannie Balderramos	JEANNIE BALDERRAMOS	6-7-10

Approval Recommended by

Signature	Area Construction Manager	Date
Deanna Vilcheck	DEANNA VILCHECK	6/8/10

Engineer Approval by

Signature	Area Construction Manager	Date
Deanna Vilcheck	DEANNA VILCHECK	6/28/10

We the undersigned contractor, have given careful consideration to the change proposed and agree, if this proposal is approved, that we will provide all equipment, furnish the materials, except as may otherwise be noted above, and perform all services necessary for the work above specified, and will accept as full payment therefor the prices shown above.

NOTE: If you, the contractor, do not sign acceptance of this order, your attention is directed to the requirements of the specifications as to proceeding with the ordered work and filing a written protest within the time therein specified.

Contractor Acceptance by

Signature	(Print name and title)	Date
	Steve Francis, Chief Estimator	6.18.10

Dist	COUNTY	ROUTE	KILOMETER POST TOTAL PROJECT	SHEET No.	TOTAL SHEETS
04	SF	80	12.6/13.2		

REGISTERED ELECTRICAL ENGINEER 04/23/10

PLANS APPROVAL DATE

REGISTERED PROFESSIONAL ENGINEER CAROL LIGHT No. 10145 Exp. 09/30/11 ELECTRICAL STATE OF CALIFORNIA

THE STATE OF CALIFORNIA OR ITS OFFICERS OR AGENTS SHALL NOT BE RESPONSIBLE FOR THE ACCURACY OR COMPLETENESS OF ELECTRONIC COPIES OF THIS PLAN SHEET.

PB AMERICAS, INC.
303 SECOND ST., SUITE 700N
SAN FRANCISCO, CA 94107-1317

SILVERMAN & LIGHT
1201 PARK AVE., SUITE 100
EMERYVILLE, CA 94608-3632

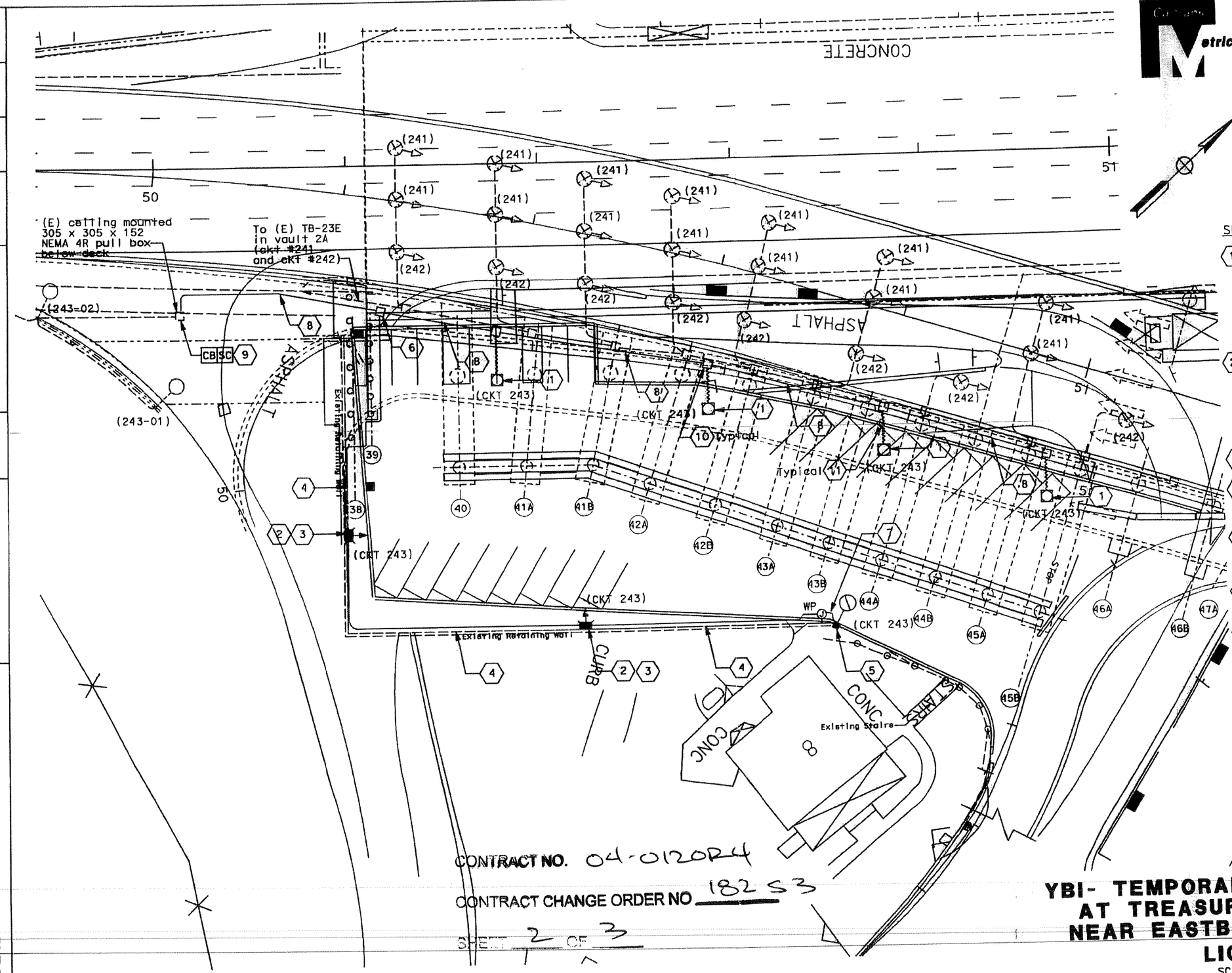

SHEET NOTES:

1. Install new ceiling mounted fixture "Hubbell HTI series luminaire" with 150 watts MH, 480 V, pulse start ballast, standard optic with drop acrylic lens double fusing and with provision of special bracket. UL listed for wet location. Mount fixture on concrete structure of westbound off-ramp deck between bent caps.
2. Install new wall mounted fixture "Hubbell MVM-0250P-268-f480" series luminaire" 250 W MH, 480 V, pulse start ballast, tempered glass lens, double fusing and with provision of special bracket. UL listed for wet location. Mount fixture on existing retaining wall.
3. Mount light fixture at 5.5 M from the finished grade
4. Install new Type 2 (27C) conduit with 3#6 AWG and 1#8G conductors (CKT #243). along (E) retaining wall. Provide conduit support every 1.5 meter maximum.
5. Install new 12 M wood pole with 2.4 mast arm with 175 watt MH luminaire . See detail on E-02 for more information.
6. Install 203(L) x 203(W) x 102(D) NEMA 3 pull box. Secure pull box on the structure with expansion bolts.
7. Install new Type 4 (27C) conduit with 3#6 AWG and 1#8G conductors (CKT #243) between pull boxes.
8. Install new Type 2 (27C) conduit with 3#6 AWG and 1#8G conductors (CKT #243). Provide conduit support every 1.5 meter maximum.
9. Intercept (E) ckt #243 in (E) ceiling mounted pull box and extend to new light fixture.
10. Install 203(L) x 203(W) x 102(D) Nema 3 pull box. Secure pull box on the structure with four (4) 10-24 concrete expansion anchors. Install fuse spliced connector in each ungrounded conductors.
11. Install new Type 4 (21C) conduit with 2#10 AWG and 1#12G conductors (CKT #243) between pull box and light fixture. Provide conduit support every 1.5 meter maximum.

CONTRACT NO. 04-0120R4

CONTRACT CHANGE ORDER NO 182 S3

SHEET 2 OF 3

YBI- TEMPORARY PARKING LOT AT TREASURE ISLAND RD. NEAR EASTBOUND ON-RAMP LIGHTING

SCALE: 1:200

E-01

DRAFT 100% SUBMITTAL (04/23/2010)

STATE OF CALIFORNIA - DEPARTMENT OF TRANSPORTATION

CONSULTANT FUNCTIONAL SUPERVISOR: BRADY NADELL

CALCULATED-DESIGNED BY: BEN JUDILLA

CHECKED BY: CAROL LIGHT

REVISED BY

DATE REVISED

DATE PLOTTED => 4/23/2010

Dist	COUNTY	ROUTE	KILOMETER POST TOTAL PROJECT	SHEET No.	TOTAL SHEETS
04	SF	80	12.6/13.2		

04/23/10
REGISTERED ELECTRICAL ENGINEER

REGISTERED PROFESSIONAL ENGINEER — CAROL LIGHT — No. 10145 — EXP. 09/30/11 — ELECTRICAL — STATE OF CALIFORNIA

PLANS APPROVAL DATE

THE STATE OF CALIFORNIA OR ITS OFFICERS OR AGENTS SHALL NOT BE RESPONSIBLE FOR THE ACCURACY OR COMPLETENESS OF ELECTRONIC COPIES OF THIS PLAN SHEET.

PB AMERICAS, INC.
303 SECOND ST., SUITE 700N
SAN FRANCISCO, CA 94107-1317

SILVERMAN & LIGHT
1201 PARK AVE., SUITE 100
EMERYVILLE, CA 94608-3632

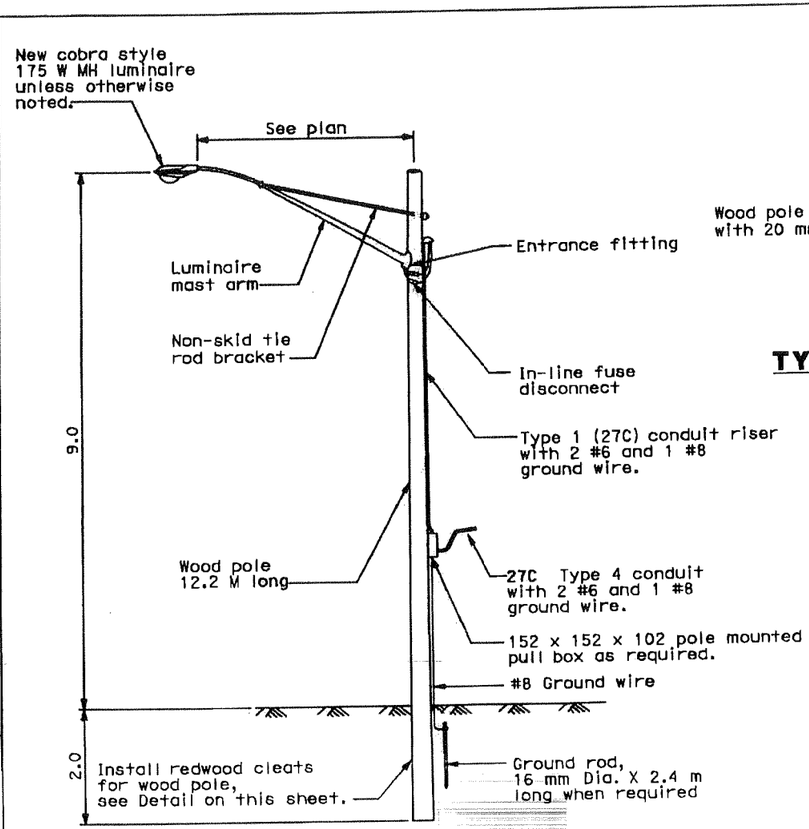

TEMPORARY LIGHTING ON WOOD POLE WITH CONDUIT RISER

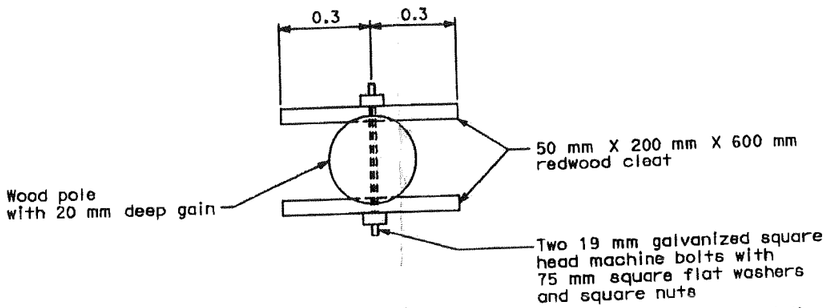

TYPICAL REDWOOD CLEAT DETAIL

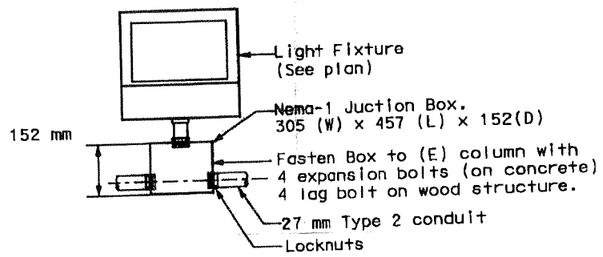

WALL MOUNTED LIGHT FIXTURE

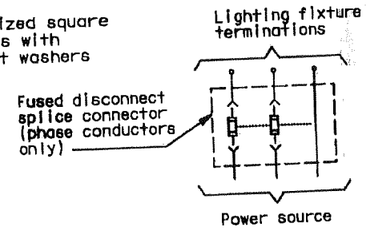

DETAIL 1

Typical to all fixture

SHEET NOTES:

1. 3#10 AWG single conductors, see Detail 1.
2. Temporary pull box mounted below upper deck.
3. Conductor spliced inside (E) NEMA 4R pull box on (E) ceiling below deck.

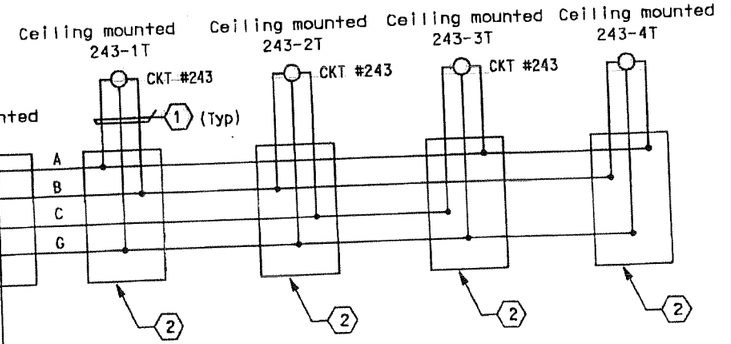

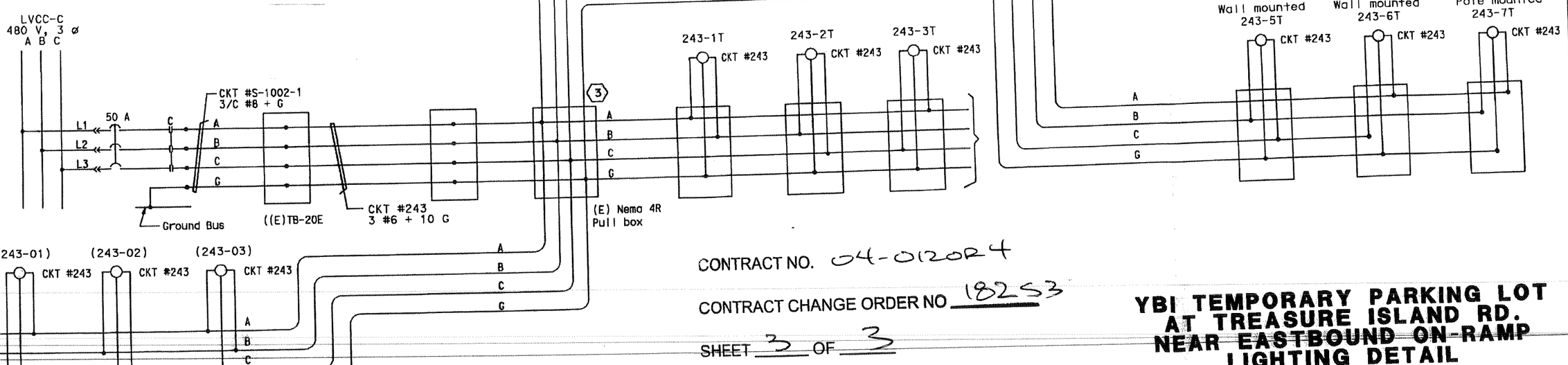

CONTRACT NO. 04-0120R4

CONTRACT CHANGE ORDER NO 18253

SHEET 3 OF 3

YBI TEMPORARY PARKING LOT AT TREASURE ISLAND RD. NEAR EASTBOUND ON-RAMP LIGHTING DETAIL

E-02

CALCULATED-DESIGNED BY	CHECKED BY
BEN JUDILLA	CAROL LIGHT

REVISED BY	DATE REVISED

CONSULTANT FUNCTIONAL SUPERVISOR
BRADY NADELL

STATE OF CALIFORNIA - DEPARTMENT OF TRANSPORTATION

DRAFT 100% SUBMITTAL (04/23/2010)

DATE PLOTTED => 4/23/2010

STATE OF CALIFORNIA - DEPARTMENT OF TRANSPORTATION

CONTRACT CHANGE ORDER

Change Requested by: Engineer

CCO 184	Suppl. No. 0	Contract No. 04 - 0120R4	Road SF-80-12.6/13.2	FED. AID LOC.: ACBRIM-080-1(097)N

To: CC MYERS INC

You are directed to make the following changes from the plans and specifications or do the following described work not included in the plans and specifications for this contract. ***NOTE: This change order is not effective until approved by the Engineer.***

Description of work to be done, estimate of quantities and prices to be paid. (Segregate between additional work at contract price, agreed price and force account.) Unless otherwise stated, rates for rental of equipment cover only such time as equipment is actually used and no allowance will be made for idle time. This last percentage shown is the net accumulated increase or decrease from the original quantity in the Engineer's Estimate.

Adjustment of Compensation at Lump Sum:

Provide compensation to the Contractor for additional costs, incurred by the Contractor's fabricator Stinger Welding Inc., during the fabrication of the steel truss of the East Tie-In portion of the Temporary Bypass Structure (Bridge No. 34-0006 (TEMP)) due to Department delays, changes and impacts to the fabrication process.

For these costs, the Contractor shall be compensated a lump sum of $3,000,000.00. In the event the Contractor document additional costs incurred due to Department delays, changes or impacts to the truss fabrication, a supplemental change order shall be issued to provide compensation for those costs.

Total Cost of Adjustment of Compensation at Lump Sum $3,000,000.00

Estimated Cost: Increase ☑ Decrease ☐ **$3,000,000.00**

By **reason of this order the time of completion will be adjusted as follows:** Deferred

Submitted by

Signature	Resident Engineer	Date
	BILL CASEY	5-15-09

Approval Recommended by

Signature	SFOBB Construction Manager	Date
Michael Forner	MIKE FORNER	5-19-09

Engineer Approval by

Signature	SFOBB Construction Manager	Date
Michael Forner	MIKE FORNER	6-9-09

We the undersigned contractor, have given careful consideration to the change proposed and agree, if this proposal is approved, that we will provide all equipment, furnish the materials, except as may otherwise be noted above, and perform all services necessary for the work above specified, and will accept as full payment therefor the prices shown above.

NOTE: If you, the contractor, do not sign acceptance of this order, your attention is directed to the requirements of the specifications as to proceeding with the ordered work and filing a written protest within the time therein specified.

Contractor Acceptance by

Signature	(Print name and title)	Date
D E Hmick	DAVID E. HIMICK, PRESIDENT	6/08/09

STATE OF CALIFORNIA - DEPARTMENT OF TRANSPORTATION

CONTRACT CHANGE ORDER MEMORANDUM

TO: MIKE FORNER / DEANNA VILCHECK	FILE: E.A. 04 - 0120R4
	CO-RTE-PM SF-80-12.6/13.2
FROM: BILL CASEY	FED. NO. ACBRIM-080-1(097)N
CCO#: **184** SUPPLEMENT#: **0** Category Code: **CHXX**	CONTINGENCY BALANCE (incl. this change) **$53,808,143.60**
COST: **$3,000,000.00** INCREASE ☑ DECREASE ☐	HEADQUARTERS APPROVAL REQUIRED? ☑ YES ☐ NO
SUPPLEMENTAL FUNDS PROVIDED: **$0.00**	IS THIS REQUEST IN ACCORDANCE WITH ENVIRONMENTAL DOCUMENTS? ☑ YES ☐ NO
CCO DESCRIPTION: Stinger ETI Truss Fabrication Impacts	**PROJECT DESCRIPTION:** CONSTRUCT ROUTE 80 TEMP BYPASS STRUCTURE

Original Contract Time:	Time Adj. This Change:	Previously Approved CCO Time Adjustments:	Percentage Time Adjusted: (including this change)	Total # of Unreconciled Deferred Time CCO(s): (including this change)
475 Day(s)	**DEF** Day(s)	**1195** Day(s)	**252** %	**8**

THIS CHANGE ORDER PROVIDES FOR:

partial compensation of additional costs incurred by the Contractor due to Department impacts to the steel fabrication of the East Tie-In truss.

This project, the Temporary Bypass Structure (TBS), provides for the construction of a detour that will allow for the tie in of the new east span of the San Francisco Oakland Bay Bridge to Yerba Buena Island. The TBS encompasses three main structures, the East Tie-In (ETI) to the existing bridge, the West Tie-In (WTI) to Yerba Buena Island, and the Viaduct structure between the two tie ins.

A December 14, 2006 Department strategy memorandum, approved by Tony Anziano, Toll Bridge Program Manager, and Richard Land, Chief Engineer, recommended that the Department assume the design responsibility for the East Tie-In (ETI) portion of this contract. Based on this memorandum, the design of the structure was changed from a design that incorporated the existing steel truss bridge with the new structure to a design that replaces the existing structure with a new structure (roll out / roll in).

Contract Change Order No. 140 was issued in the amount of $10,920,525.00 to provide for the fabrication of the steel truss of the ETI portion of the structure. During the fabrication of this truss, the contractor incurred considerable impacts due to Department delays associated with the approval of truss shop drawings and various Department changes to the design of the truss. Based on these delays and changes, the contractor has requested approximately $8,500,000.00 in compensation.

A review of these submitted costs has determined significant compensation owed to the contractor based on entitlement. However, additional analysis remains to be performed based on further documentation of impacts and actual costs incurred.

This change accounts for partial compensation of the contractor's total incurred costs pending final resolution and verification of said costs.

The contractor shall be paid the lump sum of $3,000,000.00, which accounts for partial compensation due the contractor, in order to mitigate incurring further interest, loan fees, and miscellaneous bank charges resulting from these Department impacts. Further compensation due the contractor is currently under discussion and is contingent upon the contractor providing additional information regarding this issue including but not limited to independent overhead audits, detailed cost analyses, fabrication timelines, and planned versus actual production rates. Further compensation will be provided under a separate supplemental change order once the final compensation package has been agreed to.

Compensation shall be paid as an adjustment of compensation at a lump sum of $3,000,000.00.and shall be funded through the contract's contingency funds. A cost analysis is on file.

Adjustment of contract time is deferred pending completion of the work specified in this change as it may become the controlling operation in accordance with Section 8-1.07 "Liquidated Damages", of the Standard Specifications and Section 10-1.20 "Time Related Overhead (TRO)" of the Special Provisions.

Compensation for delays resulting from this work will be made in accordance with Section 8-1.09 "Right of Way Delays" of the Standard Specifications and Section 10-1.20 "Time Related Overhead" of the Special Provisions.

ADA Notice: For individuals with sensory disabilities, this document is available in alternate formats. For information call: (916) 654-6410 or TDD (916) 654-3880 or write Records and Forms Management, 1120 N Street, MS-89, Sacramento, CA 95814.

This change was concurred with by Alec Melkonians - Asst. Project Manager, Hong Wong - Project Engineer, and Patrick Treacy - HQ Asst. Construction Coordinator. Approval from the TBPOC granted on June 4, 2009..

Maintenance concurrence is not required, as this change order is an administrative change.

RECEIVED
JUN 23 09
01050

CONCURRED BY:			
Construction Engineer:	Bill Casey, Resident Engineer	Date	5-15-09
Bridge Engineer:		Date	
Project Engineer:	Hong Wong, PE	Date	5/14/09
Project Manager:	Alec Melkonians	Date	5/14/09
FHWA Rep.:		Date	
Environmental:		Date	
Other (specify):	Patrick Treacy, HQ Asst.Const.Co	Date	5/19/09
Other (specify):		Date	
District Prior Approval By:		Date	
HQ (Issue Approve) By:	Bob Molera, HQ CCO Engineer	Date	5/20/09
Resident Engineer's Signature:		Date	5-15-09

ESTIMATE OF COST		
	THIS REQUEST	TOTAL TO DATE
ITEMS	$0.00	$0.00
FORCE ACCOUNT	$0.00	$0.00
AGREED PRICE	$0.00	$0.00
ADJUSTMENT	$3,000,000.00	$3,000,000.00
TOTAL	$3,000,000.00	$3,000,000.00

FEDERAL PARTICIPATION

☐ PARTICIPATING ☐ PARTICIPATING IN PART ☑ NONE
☐ NON-PARTICIPATING (MAINTENANCE) ☐ NON-PARTICIPATING

FEDERAL SEGREGATION (if more than one Funding Source or P.I.P. type)
☐ CCO FUNDED PER CONTRACT ☐ CCO FUNDED AS FOLLOWS

FEDERAL FUNDING SOURCE	PERCENT

ADA Notice: For individuals with sensory disabilities, this document is available in alternate formats. For information call: (916) 654-6410 or TDD (916) 654-3880 or write Records and Forms Management, 1120 N Street, MS-89, Sacramento, CA 95814.

TELECOPY

California Department of Transportation

CONSTRUCTION DIVISION

TO: District 4 CCO Desk

Date: 5/20/2009

Contract No.: 4 - 0120R4

Road: SF-80-12.6/13.2

FED. No.: ACBRIM-080-1(097)N

To: SARTIPI - 04

Attention: 04 - ALVAREZ

HQ Direction: **TO ISSUE AND APPROVE**

CCO No. 184 **Sup. No.** 0 **Rev. No.** 0

Per Your Submittal Dated: 5/20/2009 **CCO Category Code:** C - H - X - X

COMPENSATE THE CONTRACTOR FOR ADDITIONAL COSTS DUE TO DEPARTMENT DELAYS, CHANGES AND IMPACTS TO THE FABRICATION PROCESS OF THE STEEL TRUSS OF THE EAST TIE-IN PORTION OF THE TEMPORARY BYPASS STRUCTURE (BRIDGE #34-006 TEMP).

I&A IS CONTINGENT ON THE FOLLOWING:
1) OBTAIN TBPOC'S AUTHORIZATION TO APPROVE THIS CHANGE, SINCE THE COST EXCEEDS $1M.
2) TIMELY PROCESSING OF A SUPPLEMENTAL CCO TO RESOLVE THE DEFERRED TIME ASPECT OF THIS CHANGE.

TOTAL COST FOR THIS CHANGE IS SHOWN AS $3,000,000.00 WITH DEFERRED TIME ADJUSTMENT.

Items:	$0.00
Force Account:	$0.00
Agreed Price:	$0.00
Adj. of Comp.	$3,000,000.00
Total:	**$3,000,000.00**
Time:	**(DEFERRED)**

ROB EFFINGER,
Acting Assistant Division Chief, by:

Bob Molera

Bob Molera
Division of Construction
1120 "N" Street, MS-44, Sacramento, CA 95814
Fax Number: (916) 654-5735
To Confirm Transmission, Call (916) 654-2735

TOLL BRIDGE PROGRAM
OVERSIGHT COMMITTEE

TBPOC MEETING OUTCOME
June 4, 2009, 10:00 am – 1:00 pm
Caltrans Headquarters, Director's Conference Room, 1120 N Street, Sacramento

	Topic	Presenter	Outcome
1.	**CHAIR'S REPORT**	W. Kempton, CT	Information
2.	**TBPOC/ ABF/ TYLMN Discussion**		
	a. SAS Mitigation and Acceleration Update	PMT	Information
3.	**CONSENT CALENDAR**		
	a. TBPOC May 7 Meeting Minutes	A. Fremier, BATA	**APPROVED**
	b. TBPOC May 19 Conference Call Minutes	A. Fremier, BATA	**APPROVED**
	c. YBITS Addendum #4	T. Anziano, CT	**APPROVED**
	d. YBI Detour Contract Change Orders (CCO's):	D. Noel, CTC	
	1) CCO 129, S2 - $1,177,000		Information
	2) CCO 140, S1 - $300,000		Information
	3) CCO 141, S1 - $1,500,000		**APPROVED**
	4) CCO 153 - $2,389,940		**APPROVED**
	5) CCO 166, S1 - $900,000		**APPROVED**
	6) CCO 171 - $10,147,370		**APPROVED**
	7) CCO 184 - $3,000,000		**APPROVED**
	8) CCO 186 - $2,635,910		**APPROVED**
4.	**PROGRESS REPORTS**		
	a. Draft May 2009 Monthly Progress Report	A. Fremier, BATA	**APPROVED**
5.	**PROGRAM ISSUES**		
	a. PMT Efficiency Recommendations	PMT	Information
	b. Communications Plan Update	B. Ney, CT	**APPROVED***
6.	**SAN FRANCISCO-OAKLAND BAY BRIDGE UPDATES**		
	a. Yerba Buena Island (YBI) Detour		
	1) East Tie-In (ETI) Update	T. Anziano, CT	Information
	2) ETI Contingency Plan	T. Anziano, CT	**APPROVED**
	3) YBI Detour Budget Change	T. Anziano, CT	**APPROVED**
	4) YBI Detour Completion Date – CCO 91, S2	D. Noel, CTC	Information
	b. Yerba Buena Island Transition Structures No. 1		
	1) YBITS Addendum #5	T. Anziano, CT	**APPROVED**
	c. Oakland Touchdown (OTD) No. 1 Update	T. Anziano, CT	Information
7.	**OTHER BUSINESS**		

*Although shown as an informational item on the agenda, the TBPOC approved a 6-point East Tie-In messaging plan with instructions to focus on the 4-day Labor Day weekend SFOBB closure and to consider the Contingency Plan (Pt #6) as a talking point.

STATE OF CALIFORNIA - DEPARTMENT OF TRANSPORTATION

CONTRACT CHANGE ORDER

Change Requested by: Engineer

CCO 184	Suppl. No. 1	Contract No. 04 - 0120R4	Road SF-80-12.6/13.2	FED. AID LOC.: ACBRIM-080-1(097)N

To: **CC MYERS INC**

You are directed to make the following changes from the plans and specifications or do the following described work not included in the plans and specifications for this contract. ***NOTE: This change order is not effective until approved by the Engineer.***

Description of work to be done, estimate of quantities and prices to be paid. (Segregate between additional work at contract price, agreed price and force account.) Unless otherwise stated, rates for rental of equipment cover only such time as equipment is actually used and no allowance will be made for idle time. This last percentage shown is the net accumulated increase or decrease from the original quantity in the Engineer's Estimate.

Adjustment of Compensation at Lump Sum:

In accordance with Section 4-1.03 "Changes" of the contract Standard Specifications, provide compensation to the Contractor for all outstanding costs incurred by the Contractor's steel fabricator Stinger Welding Inc., during the fabrication of the steel truss of the East Tie-In (ETI) portion of the Temporary Bypass Structure (Bridge No. 34-0006 (TEMP)) due to a Department caused delays, changes and impacts to the steel fabrication.

For this work, the Contractor will be compensated a lump sum of $4,393,420.00. This sum, in addition to the compensatio paid under the original Change Order No. 184, constitutes full and final compensation, including all markups, for all direct, indirect and impact costs, both past and future, pertaining to all work performed by Stinger Welding Inc. on the ETI steel truss and no additional compensation shall be paid.

Total Cost of Adjustment of Compensation at Lump Sum $4,393,420.00

This change order excludes any additional costs incurred by the Contractor's subcontractor Danny's Construction Company, Inc. (DCCI) during the erection of the steel truss that were incurred due to the expedited fabrication of the truss by Stinger Welding Inc. in their efforts to mitigate the Department caused delays to the steel fabrication.. Any compensation associated with these additional steel erection costs shall be compensated under Change Order No. 214.

This change order includes compensation for all costs associated with the design changes incorporated under Change Order No. 140, Supplement No. 2 as they pertain to the fabrication of the ETI truss.

Estimated Cost: **Increase** ☑ **Decrease** ☐ **$4,393,420.00**

By reason of this order the time of completion will be adjusted as follows: Deferred

Submitted by:		
Signature	**Resident Engineer** BILL CASEY	**Date** 7-28-09
Approval Recommended by:		
Signature Mike Forner	**SFOBB Construction Manager** MIKE FORNER	**Date** 7-29-09
Engineer Approval by:		
Signature Mike Forner	**SFOBB Construction Manager** MIKE FORNER	**Date** 8-11-09

We the undersigned contractor, have given careful consideration to the change proposed and agree, if this proposal is approved, that we will provide all equipment, furnish the materials, except as may otherwise be noted above, and perform all services necessary for the work above specified, and will accept as full payment therefor the prices shown above.

NOTE: If you, the contractor, do not sign acceptance of this order, your attention is directed to the requirements of the specifications as to proceeding with the ordered work and filing a written protest within the time therein specified.

Contractor Acceptance by:		
Signature	**(Print name and title)** DANIEL E. HAMICK, PRESIDENT	**Date** 8/10/09

STATE OF CALIFORNIA - DEPARTMENT OF TRANSPORTATION

CONTRACT CHANGE ORDER MEMORANDUM

TO: MIKE FORNER / DEANNA VILCHECK	FILE: E.A. 04 - 0120R4
FROM: BILL CASEY	CO-RTE-PM SF-80-12.6/13.2
	FED. NO. ACBRIM-080-1(097)N

CCO#: **184**	SUPPLEMENT#: **1**	Category Code: **CHXX**	CONTINGENCY BALANCE (incl. this change) **$17,668,667.59**
COST: **$4,393,420.00**	INCREASE ☑	DECREASE ☐	HEADQUARTERS APPROVAL REQUIRED? ☑ YES ☐ NO
SUPPLEMENTAL FUNDS PROVIDED: **$0.00**			IS THIS REQUEST IN ACCORDANCE WITH ENVIRONMENTAL DOCUMENTS? ☑ YES ☐ NO

CCO DESCRIPTION:
ETI Truss Fabrication Impacts

PROJECT DESCRIPTION:
CONSTRUCT ROUTE 80 TEMP BYPASS STRUCTURE

Original Contract Time:	Time Adj. This Change:	Previously Approved CCO Time Adjustments:	Percentage Time Adjusted: (including this change)	Total # of Unreconciled Deferred Time CCO(s): (including this change)
475 Day(s)	**DEF** Day(s)	**1195** Day(s)	**252** %	**8**

THIS CHANGE ORDER PROVIDES FOR:

Final compensation to the Contractor for additional costs incurred due to Department-caused delays and impacts to the steel fabrication of the East Tie-In truss.

This project, the Yerba Buena Island Detour (YBID), calls for the construction of a temporary detour for both eastbound and westbound I-80 traffic that will allow for the tie in of the new east span of the San Francisco Oakland Bay Bridge to Yerba Buena Island. The YBID encompasses three main structures, the East Tie-In to the existing bridge, the West Tie-In (WTI) to Yerba Buena Island, and the Viaduct structure between the two tie ins. The contract was awarded as a performance-based project with the Contractor responsible for meeting the design criteria specified in the contract.

A December 14, 2006 Department strategy memorandum, approved by Tony Anziano, Toll Bridge Program Manager, Richard Land, Chief Engineer, and subsequently by the Toll Bridge Program Oversight Committee recommended that the Department assume the design responsibility for the East Tie-In portion of the detour. Based on this memorandum, the design of the structure was changed from a design that incorporated the existing steel truss bridge into the new structure to a design that replaces the existing structure with a new structure (roll out / roll in).

Contract Change Order No. 140 was issued in the amount of $10,920,525.00 to provide for the fabrication of the steel truss of the ETI portion of the structure (the roll in structure). The change order was priced with an aggressive fabrication schedule that was required in order to meet the Department's planned roll in of the ETI truss during Labor Day Weekend of 2009. That change order provided an incentive payment for the Contractor to improve upon an agreed upon March 8, 2009 steel delivery date with a matching disincentive for a late delivery.

During the fabrication of this truss, the Contractor incurred considerable impacts due to Department delays associated with the approval of the truss shop drawings and various Department changes to the design of the truss. The design changes to the truss were incorporated under Contract Change Order No. 140 - Supplement No. 2 with compensation deferred for any additional costs resulting from these changes. Based on these delays and changes, the Contractor submitted a request, dated April 2, 2009, for approximately $8,022,000.00 in compensation. A subsequent request, dated May 15, 2009, has now been submitted for $8,968,628.00.

The original Contract Change Order No. 184 provided partial compensation of $3,000,000.00 based on costs that had been documented at the time that change order was issued. The Contractor has now submitted documentation that supports additional compensation of $4,393,420.00 to resolve all costs associated with the steel fabrication of the truss. This contract change order provides for this compensation.

This contract change order recognizes significant Department delays that were incurred by the fabricator in the shop drawing approval process. These delays were incurred over the period from June 2008 through February 2009. Contract Change Order No. 140 did not address any time allowance for the shop drawing review process. However, the Contractor was verbally notified that a 10-day review should be anticipated. Based on this notification, the Contractor anticipated approval of the shop drawing for the north truss, south truss, and beams and stringers over the period from August 14, 2008 to September 11, 2008. The final approval of the drawings was actually received between December 30, 2008 and February 18, 2009. This represents a 4-½ to 5-½ month delay.

ADA Notice: For individuals with sensory disabilities, this document is available in alternate formats. For information call: (916) 654-6410 or TDD (916) 654-3880 or write Records and Forms Management, 1120 N Street, MS-89, Sacramento, CA 95814.

The shop drawing approval delay had 3 significant impacts to the Contractor's operations. These impacts are described below:

1) Unabsorbed Shop and Labor Resources (August through November 2008):

By the summer of 2008, the Contractor had dedicated approximately half of their fabrication shop to the ETI truss and had increased their labor force in anticipation of starting the work. The 4-½ to 5-½ month delay to the work resulted in the Contractor having to absorb over 50,000 man-hours that were planned to be employed on the truss into other projects. In an effort to mitigate these man-hours without further delaying the ETI work, the Contractor set up a temporary fabrication yard in a vacant lot adjacent to their permanent shop facilities and employed their work force on other projects. Considerable costs were incurred in setting up the temporary fabrication yard and considerable labor inefficiencies were incurred on these projects.

2) Impacts to the ETI Truss Fabrication (October 2008 through April 2009):

During the fall of 2008 the Contractor began fabrication of the truss in a piecemeal fashion due to the delays in the shop drawing approval. While this work was highly inefficient, the Contractor performed this work in an effort to mitigate Department delays and the risk of not meeting the planned 2009 Labor Day Weekend roll in of the truss. Once shop drawings were approved by the winter of 2008/2009, the Contractor dedicated all of their available resources to the truss. This culminated in over 6,000 man-hours per week being employed on the truss fabrication by late February of 2009 compared to the as-planned peak man-hours of 3,000 per week. Over 23,400 hours of overtime was also expended on this work.

3) Impacts to Concurrent Projects (December 2008 through July 2009):

The Contractor's as-planned schedule anticipated that by December of 2009 the resources required for the fabrication of the ETI truss would have peaked and man power could begin to be redirected to other planned fabrication projects. Due to the delays to the work, just the opposite occurred. Between December 2008 and April of 2009, the Contractor employed approximately 38,000 unplanned man-hours on the ETI truss. This resulted in considerable delays to these other projects. In addition, the ETI truss occupied the majority of the fabrication shop at a time when it was anticipated the work would have been completed. This resulted in additional fabrication work being performed on other projects in the temporary fabrication facility set up adjacent to the permanent facility.

Both the piecemeal work performed in the fall of 2008 and the increased resources employed during the winter and spring of 2009 resulted in extensive inefficiencies being incurred to the actual ETI truss fabrication. An as-planned verses actual cost analysis shows an additional 26,200 man-hours were expended on the truss fabrication. Additional costs were incurred in working extended overtime, labor escalation and employee retention along with additional costs related to design changes incorporated into the truss under Contract Change Order No. 140 - Supplement No. 2. A total cost of $3,365,040.00 has been determined to be compensable for these impacts.

Concerning impacts to other projects, the Contractor acted to mitigate Department delay costs by absorbing over 50,000 as-planned man-hours into other projects during the summer and fall of 2008. Additionally, the Contractor incurred significant impacts to their as-planned operations on other projects during the winter and spring of 2009 due to the approximately 38,000 unplanned man-hours employed on the ETI truss. These impacts include performing fabrication work in the vacant lot adjacent to their actual fabrication facilities. Costs associated with this work include labor inefficiencies, costs associated with the set up and rental equipment required to support the temporary fabrication facility and overtime the Contractor incurred during the winter and spring of 2009 in an effort to maintain their delivery schedules on these other projects. The Contractor has produced detailed labor reports and as-planned bid documentation to support these additional costs. A total cost of $3,384,480.00 has been determined to be compensable for these impacts.

The Contractor has also documented financing costs associated with significant costs overruns and revenue shortfalls resulting from these Department impacts to their operations. Compensation of $643,900.00 shall be paid for these costs.

The total compensation of $7,393,420.00 shall be off set by the $3,000,000.00 compensated under the original Contract Change Order No. 184. Compensation shall be paid as an adjustment of compensation at an agreed lump sum of $4,393,420.00, which shall be financed from the contract's contingency funds. A detailed cost estimate is on file.

ADA Notice: For individuals with sensory disabilities, this document is available in alternate formats. For information call: (916) 654-6410 or TDD (916) 654-3880 or write Records and Forms Management, 1120 N Street, MS-89, Sacramento, CA 95814

Adjustment of contract time is deferred pending completion of the work specified in this change as it may become the controlling operation in accordance with Section 8-1.07 "Liquidated Damages", of the Standard Specifications and Section 10-1.20 "Time Related Overhead (TRO)" of the Special Provisions.

Compensation for delays resulting from this work will be made in accordance with Section 8-1.09 "Right of Way Delays" of the Standard Specifications and Section 10-1.20 "Time Related Overhead" of the Special Provisions.

This change was concurred with by Alec Melkonians - Asst. Project Manager and Hong Wong - Project Engineer.

The Toll Bridge Program Oversight Committee (TBPOC) provided approval of this change on August 7, 2009.

Maintenance concurrence is not required as this is an administrative change and doesn't affect any permanent roadway features.

RECEIVED
SEP 28 09
01-0053

CONCURRED BY:		
Construction Engineer:	Bill Casey, Resident Engineer	Date 7-28-09
Bridge Engineer:		Date
Project Engineer:	Hong Wong, PE	Date 7-28-09
Project Manager:	Alec Melkonians	Date 7-29-09
FHWA Rep.:		Date
Environmental:		Date
Other (specify):		Date
Other (specify):		Date
District Prior Approval By:		Date
HQ (Issue Approve) By:	Bob Molera, HQ CCO Engineer	Date 7-31-09
Resident Engineer's Signature:		Date 7-28-09

ESTIMATE OF COST	THIS REQUEST	TOTAL TO DATE
ITEMS	$0.00	$0.00
FORCE ACCOUNT	$0.00	$0.00
AGREED PRICE	$0.00	$0.00
ADJUSTMENT	$4,393,420.00	$7,393,420.00
TOTAL	$4,393,420.00	$7,393,420.00

FEDERAL PARTICIPATION

☐ PARTICIPATING ☐ PARTICIPATING IN PART ☑ NONE
☐ NON-PARTICIPATING (MAINTENANCE) ☐ NON-PARTICIPATING

FEDERAL SEGREGATION (if more than one Funding Source or P.I.P. type)
☐ CCO FUNDED PER CONTRACT ☐ CCO FUNDED AS FOLLOWS

FEDERAL FUNDING SOURCE	PERCENT

ADA Notice: For individuals with sensory disabilities, this document is available in alternate formats. For information call: (916) 654-6410 or TDD (916) 654-3880 or write Records and Forms Management, 1120 N Street, MS-89, Sacramento, CA 95814.

TELECOPY

California Department of Transportation

CONSTRUCTION DIVISION

TO: District 4 CCO Desk

Date: 7/31/2009

Contract No.: 4 - 0120R4

Road: SF-80-12.6/13.2

FED. No.: ACBRIM-080-1(097)N

To: SARTIPI - 04

Attention: 04 - BORNMAN

HQ Direction: TO ISSUE AND APPROVE

CCO No. 184 **Sup. No.** 1 **Rev. No.** 0

Per Your Submittal Dated: 7/30/2009 **CCO Category Code:** C - H - X - X

COMPENSATE THE CONTRACTOR FOR ALL OUTSTANDING COSTS INCURRED BY THE CONTRACTOR'S STEEL FABRICATOR, STINGER WELDING INC, DURING THE FABRICATION OF THE STEEL TRUSS OF THE EAST TIE-IN TRUSS PORTION OF THE TEMPORARY BYPASS STRUCTURE (BRIDGE #34-006 TEMP), DUE TO DEPARTMENT CAUSED DELAYS, CHANGES AND IMPACTS TO THE STEEL FABRICATION.

I&A IS CONTINGENT ON THE FOLLOWING:
1) OBTAIN TBPOC'S AUTHORIZATION TO APPROVE THIS CHANGE, SINCE THE CUMULATIVE COST FOR THIS CHANGE EXCEEDS $1M.
2) TIMELY PROCESSING OF A SUPPLEMENTAL CCO TO RESOLVE THE DEFERRED TIME ASPECT OF THIS CHANGE.

TOTAL COST FOR THIS CHANGE, INCLUDING THIS SUPPLEMENTAL, IS SHOWN AS $7,393,420.00 WITH DEFERRED TIME ADJUSTMENT.

Items:	$0.00
Force Account:	$0.00
Agreed Price:	$0.00
Adj. of Comp.	$4,396,420.00
Total:	**$4,396,420.00**
Time:	**(DEFERRED)**

ROB EFFINGER,
Acting Assistant Division Chief, by:

Bob Molera

Bob Molera
Division of Construction
1120 "N" Street, MS-44, Sacramento, CA 95814
Fax Number: (916) 654-5735
To Confirm Transmission, Call (916) 654-2735

TOLL BRIDGE PROGRAM
OVERSIGHT COMMITTEE

TBPOC MEETING OUTCOME
August 7, 2009, 10:00 am – 11:00 am
Mission Bay Office, Conference Room 1906, 325 Burma Road, Pier 7, Oakland

	Topic	Presenter	Outcome
1.	**TBPOC CHAIR**	S. Maller, CTC	**APPROVED***
2.	**CONSENT CALENDAR** a. TBPOC July 15 Meeting Minutes	P. Lee, BATA	**APPROVED**
	b. Yerba Buena Island Detour Contract Change Order (CCO): 1) CCO 184-S1 ($4,393,420 for ETI Truss Fabrication Impacts)	D. Noel, CTC	**APPROVED**
	c. Yerba Buena Island Transition Structures No. 1 1) Addendum No. 6	T. Anziano, CT	**APPROVED**
3.	**PROGRESS REPORTS** a. TBSRP Draft 2nd Quarter 2009 Project Progress and Financial Update	P. Lee, BATA	**APPROVED**
4.	**SAN FRANCISCO-OAKLAND BAY BRIDGE UPDATES** a. Bridge Light Poles	T. Anziano, CT	**APPROVED**
	b. Self-Anchored Suspension Superstructure 1) TBPOC China & Canada Visit Preparations	PMT	Information
5.	**OTHER BUSINESS**		

*S. Heminger elected new TBPOC Chair.

STATE OF CALIFORNIA - DEPARTMENT OF TRANSPORTATION

CONTRACT CHANGE ORDER

Change Requested by: Engineer

CCO: 185	Suppl. No. 1	Contract No. 04 - 0120R4	Road SF-80-12.6/13.2	FED. AID LOC.:

To: CC MYERS INC

You are directed to make the following changes from the plans and specifications or do the following described work not included in the plans and specifications for this contract. ***NOTE: This change order is not effective until approved by the Engineer.***

Description of work to be done, estimate of quantities and prices to be paid. (Segregate between additional work at contract price, agreed price and force account.) Unless otherwise stated, rates for rental of equipment cover only such time as equipment is actually used and no allowance will be made for idle time. This last percentage shown is the net accumulated increase or decrease from the original quantity in the Engineer's Estimate.

Extra Work at Force Account:

Provide additional funds for the work specified under the original Change Order No. 185 as determined by the Engineer.

Estimated cost of Extra Work at Force Account $60,000.00

Estimated Cost: **Increase** ☑ **Decrease** ☐ **$60,000.00**

By reason of this order the time of completion will be adjusted as follows: 0 days

Submitted by		
Signature J Baldwin	**Resident Engineer** JEANNIE BALDERRAMOS	**Date** 9-27-10
Approval Recommended by		
Signature Michael Fromm for	**Area Construction Manager** DEANNA VILCHECK	**Date** 9-29-10
Engineer Approval by		
Signature Deanna Vilcheck	**Area Construction Manager** DEANNA VILCHECK	**Date** 10/7/10

We the undersigned contractor, have given careful consideration to the change proposed and agree, if this proposal is approved, that we will provide all equipment, furnish the materials, except as may otherwise be noted above, and perform all services necessary for the work above specified, and will accept as full payment therefor the prices shown above.

NOTE: If you, the contractor, do not sign acceptance of this order, your attention is directed to the requirements of the specifications as to proceeding with the ordered work and filing a written protest within the time therein specified.

Contractor Acceptance by		
Signature NOT REQUIRED.	**(Print name and title)**	**Date**

STATE OF CALIFORNIA - DEPARTMENT OF TRANSPORTATION

CONTRACT CHANGE ORDER

Change Requested by: Engineer

CCO: 185	Suppl. No. 1	Contract No. 04 - 0120R4	Road SF-80-12.6/13.2	FED. AID LOC.:

To: CC MYERS INC

You are directed to make the following changes from the plans and specifications or do the following described work not included in the plans and specifications for this contract. ***NOTE: This change order is not effective until approved by the Engineer.***

Description of work to be done, estimate of quantities and prices to be paid. (Segregate between additional work at contract price, agreed price and force account.) Unless otherwise stated, rates for rental of equipment cover only such time as equipment is actually used and no allowance will be made for idle time. This last percentage shown is the net accumulated increase or decrease from the original quantity in the Engineer's Estimate.

Extra Work at Force Account:

Provide additional funds for the work specified under the original Change Order No. 185 as determined by the Engineer.

Estimated cost of Extra Work at Force Account $60,000.00

Estimated Cost: **Increase** ☑ **Decrease** ☐ **$60,000.00**

By reason of this order the time of completion will be adjusted as follows: 0 days

Submitted by		
Signature J Baldwin	**Resident Engineer** JEANNIE BALDERRAMOS	**Date** 9-27-10
Approval Recommended by		
Signature Michael Fromm for	**Area Construction Manager** DEANNA VILCHECK	**Date** 9-29-10
Engineer Approval by		
Signature Deanna Vilcheck	**Area Construction Manager** DEANNA VILCHECK	**Date** 10/7/10

We the undersigned contractor, have given careful consideration to the change proposed and agree, if this proposal is approved, that we will provide all equipment, furnish the materials, except as may otherwise be noted above, and perform all services necessary for the work above specified, and will accept as full payment therefor the prices shown above.

NOTE: If you, the contractor, do not sign acceptance of this order, your attention is directed to the requirements of the specifications as to proceeding with the ordered work and filing a written protest within the time therein specified.

Contractor Acceptance by		
Signature NOT REQUIRED.	**(Print name and title)**	**Date**

CONTRACT CHANGE ORDER

Change Requested by: Engineer

CCO 186	Suppl. No. 0	Contract No. 04 - 0120R4	Road SF-80-12.6/13.2	FED. AID LOC.: ACBRIM-080-1(097)N

To: **CC MYERS INC**

You are directed to make the following changes from the plans and specifications or do the following described work not included in the plans and specifications for this contract. ***NOTE: This change order is not effective until approved by the Engineer.***

Description of work to be done, estimate of quantities and prices to be paid. (Segregate between additional work at contract price, agreed price and force account.) Unless otherwise stated, rates for rental of equipment cover only such time as equipment is actually used and no allowance will be made for idle time. This last percentage shown is the net accumulated increase or decrease from the original quantity in the Engineer's Estimate.

Eliminate the as-planned furnishing and operation of the portable changeable message signs as shown on the Contract Plans and as defined by Contract Bid Item No. 32.

Estimate of Decrease in Contract Item at Contract Price:

Item No. 32: PORTABLE CHANGEABLE MESSAGE SIGN
-49 EA (–100.00%) $5,000.00 /EA = –$245,000.00 (–100.00%)

Total cost for Decrease in Contract Item.....($245,000.00)

In accordance with Section 4-1.03B(3), "Eliminated Items," of the Standard Specifications, the adjustment due to the elimination of Item No. 32 - Portable Changeable Message Sign, is zero.

Extra Work at Force Account:

Provide miscellaneous additional changeable message (beyond the 160 EA provided for under this change order) and detour signing, in addition to that shown on Sheet 3 through 12 of this change order, as determined by the Engineer.

Estimated Cost of Extra Work at Force Account $200,000.00

Extra Work at Lump Sum:

Perform the following work pertaining to the full closure of the San Francisco Oakland Bay Bridge (SFOBB) over the 2009 Labor Day Weekend:

1) Furnish, install and maintain a maximum of 160 (EA) programmable changeable message signs at the designated locations as shown on Sheet 3 through 12 of this change order and as determined by the Engineer. All signs shall be placed in accordance with the dates and messages as shown.

2) Furnish and install all temporary signing as shown on Sheet 3 through 7 of this change order prior to the implementation of the Labor Day Weekend SFOBB closure and remove all signing after the closure is completed.

3) Provide all traffic control necessary to implement the SFOBB Labor Day weekend closure in accordance with Sheet 3 through 7 of this change order. The closure shall begin at 8:00 PM on September 3, 2009 and shall end no later than 5:00 AM on September 8, 2009 or as determined by the Engineer. Traffic control shall include providing access to Yerba Buena Island and Treasure Island from the City of San Francisco as determined by the Engineer.

For this work, the Contractor shall be compensated an agreed lump sum of $2,435,910.00. This lump sum constitutes full and final compensation, including all markups, for the work specified under this change order.

Consideration of a time adjustment will be deferred until completion of the work specified herein. Determination of a commensurate time extension will be made in accordance with Section 8-1.07, "Liquidated Damages", of the Standard Specifications and Section 10-1.20 "Time Related Overhead (TRO)" of the Special Provisions.

Compensation for delays resulting from this work will be made in accordance with Section 8-1.09 "Right of Way Delays" of the Standard Specifications and Section 10-1.20 "Time Related Overhead" of the Special Provisions.

Total Cost of Extra Work at Lump Sum $2,435,910.00

CONTRACT CHANGE ORDER

Change Requested by: Engineer

CCO 186	Suppl. No. 0	Contract No. 04 - 0120R4	Road SF-80-12.6/13.2	FED. AID LOC.: ACBRIM-080-1(097)N

Estimated Cost: **Increase** ☑ **Decrease** ☐ **$2,390,910.00**

By reason of this order the time of completion will be adjusted as follows: Deferred

Submitted by

Signature	Resident Engineer	Date
	BILL CASEY	7-27-09

Approval Recommended by

Signature	SFOBB Construction Manager	Date
Mike Forner	MIKE FORNER	7-28-09

Engineer Approval by

Signature	SFOBB Construction Manager	Date
Mike Forner	MIKE FORNER	8-25-09

We the undersigned contractor, have given careful consideration to the change proposed and agree, if this proposal is approved, that we will provide all equipment, furnish the materials, except as may otherwise be noted above, and perform all services necessary for the work above specified, and will accept as full payment therefor the prices shown above.

NOTE: If you, the contractor, do not sign acceptance of this order, your attention is directed to the requirements of the specifications as to proceeding with the ordered work and filing a written protest within the time therein specified.

Contractor Acceptance by

Signature	(Print name and title)	Date
D E Hamick	DANIEL E. HAMICK, PRESIDENT	8/24/09

CONTRACT NO. 04-0120R4

The plan sheets contained herein have been prepared by or under the direction of the following Registered Persons.

TRAFFIC HANDLING/CONTROL, CMS/PCMS AND DETOUR SIGNING

REGISTERED CIVIL ENGINEER

CONTRACT NO. 04-0120R4

CONTRACT CHANGE ORDER NO 186

SHEET _____ OF _____

DETOUR NOTES:

1. Close EB Route 80 at 7th Street off-ramp.
2. Open EB Route 80 on-ramp from Sterling St. for EB Route 80 off-ramp (left) to Treasure Island and Yerba Buena Island.
3. Close EB Route 80 on-ramp from 8th and Bryant Streets.
4. Close EB Route 80 on-ramp from 5th and Bryant Streets.
5. Close Bryant St. WB at Beale.
6. Close EB Route 80 on-ramp from Harrison, Essex, and 1st Streets

REGISTERED PROFESSIONAL ENGINEER
ALEC MELKONIANS
C 053452
Exp. 6/30/09
CIVIL
STATE OF CALIFORNIA

DIST	COUNTY	ROUTE	KILOMETER POST TOTAL PROJECT	SHEET No.	TOTAL SHEETS
04	SF				

Metric

REGISTERED CIVIL ENGINEER

PLANS APPROVAL DATE

REGISTERED PROFESSIONAL ENGINEER — CIVIL — STATE OF CALIFORNIA — Exp.

The State of California or its officers or agents shall not be responsible for the accuracy or completeness of electronic copies of this plan sheet.

Caltrans now has a web site! To get to the web site, go to: http://www.dot.ca.gov

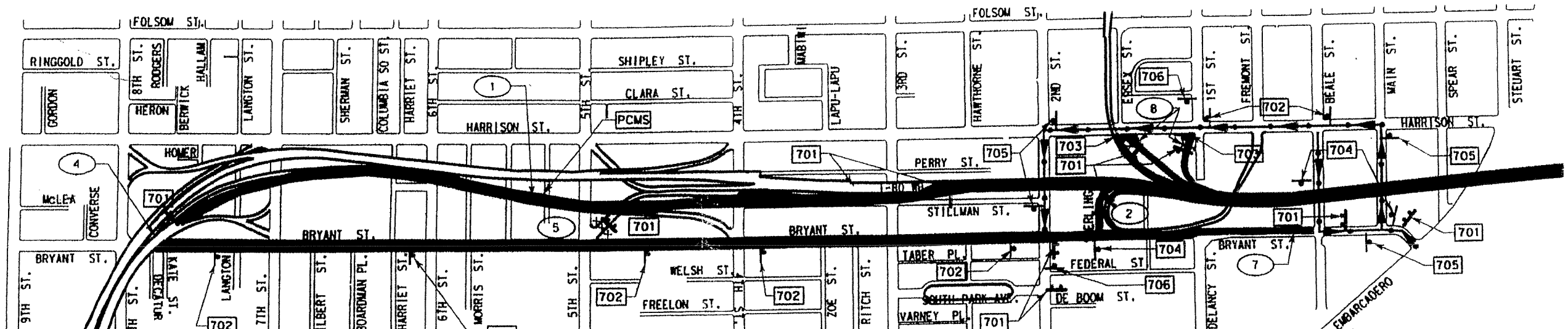

701 *
Special 3000 mm X 2100 mm

EASTBOUND
BAY BRIDGE
WILL BE CLOSED

DATES

TIMES

200 mm D Caps

702
Special 1000 mm x 1200 mm

TREASURE ISLAND
YERBA BUENA IS.
DETOUR ↑

75 mm B Caps
150 mm B Caps

703
Special 1000 mm x 1200 mm

TREASURE ISLAND
YERBA BUENA IS.
DETOUR →

75 mm B Caps
150 mm B Caps

704
Special 1000 mm x 1200 mm

TREASURE ISLAND
YERBA BUENA IS.
DETOUR ←

75 mm B Caps
150 mm B Caps

705
Special 1000 mm x 1200 mm

TREASURE ISLAND
YERBA BUENA IS.
DETOUR ↰

75 mm B Caps
150 mm B Caps

706
Special 1000 mm x 1200 mm

TREASURE ISLAND
YERBA BUENA IS.
DETOUR ↱

75 mm B Caps
150 mm B Caps

CONTRACT NO. 04-0120R4

CONTRACT CHANGE ORDER NO 186

SHEET 3 OF 12

OAKLAND

SOLID BLACK- CLOSED

OPEN

DATE REVISED | REVISED BY | DATE

CALCULATED/ DESIGNED BY

CHECKED BY

DESIGN OVERSIGHT

STATE OF CALIFORNIA - DEPARTMENT OF TRANSPORTATION
Caltrans

LAST REVISION DATE PLOTTED => $DATE
DGN FILE => $REQUEST
USERNAME => $USER

40120rm09.dgn 5/31/2007 2:23:36 PM

RELATIVE BORDER SCALE IS IN MILLIMETERS
0 20 40 60 80

CU

EA 0120R4

SHEET 4 OF 9

CCO_____

DIST	COUNTY	ROUTE	POST MILES TOTAL PROJECT	SHEET NO.	TOTAL SHEETS
04	SF				

REGISTERED CIVIL ENGINEER

REGISTERED PROFESSIONAL ENGINEER — CIVIL — STATE OF CALIFORNIA

The State of California or its officers or agents shall not be responsible for the accuracy or completeness of electronic copies of this plan sheet.

Caltrans now has a web site! To get to the web site, go to: http://www.dot.ca.gov

LEGEND

[#] CMS SIGN NO.

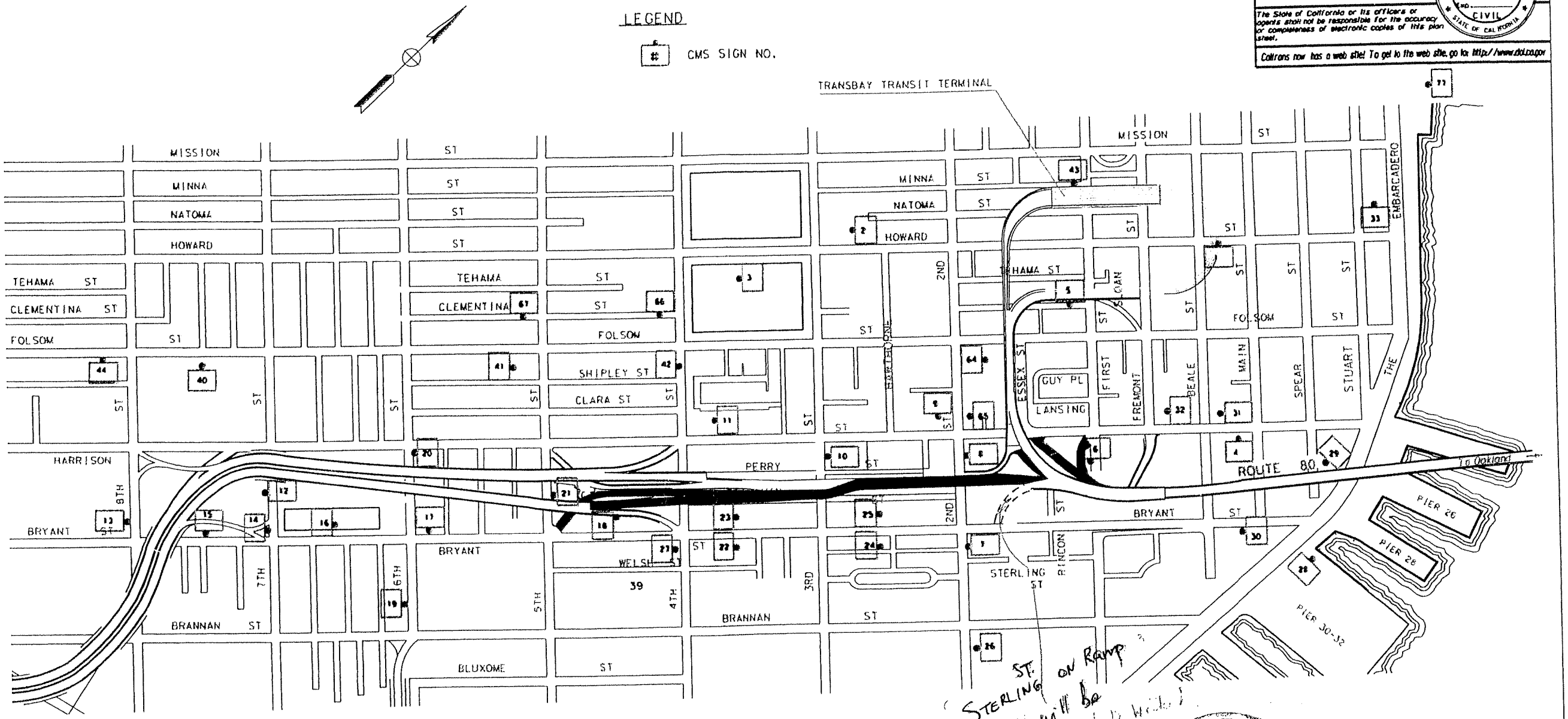

CONTRACT NO. 04-0120R4

SOLID BLACK - CLOSED

CONTRACT CHANGE ORDER NO 186

SHEET 4 OF 12

ST. STERLING on Ramp 3 this will be open on [illegible]

REGISTERED PROFESSIONAL ENGINEER — CHEUK HONG WONG — C 60145 — EXP 6/30/08 — CIVIL — STATE OF CALIFORNIA

CALCULATED/ DESIGNED BY	DATE	REVISED BY	DATE REVISED
CHECKED BY			

PROJECT ENGINEER

STATE OF CALIFORNIA - DEPARTMENT OF TRANSPORTATION

Caltrans

TRAFFIC

FOR REDUCED PLANS ORIGINAL SCALE IS IN INCHES 0 1 2 3

USERNAME => $USER
DGN FILE => &REQUEST

CU

EA 0120R4

LAST REVISION | DATE PLOTTED => $DATE | TIME PLOTTED => $TIME

PCMS Location.dgn 7/5/2007 1:03:00 PM

Dist	COUNTY	ROUTE	POST MILES TOTAL PROJECT	SHEET No.	TO SHE
04	SF				

REGISTERED CIVIL ENGINEER DATE

PLANS APPROVAL DATE

THE STATE OF CALIFORNIA OR ITS OFFICERS OR AGENTS SHALL NOT BE RESPONSIBLE FOR THE ACCURACY OR COMPLETENESS OF ELECTRONIC COPIES OF THIS PLAN SHEET.

REGISTERED PROFESSIONAL ENGINEER
ALEC MELKONIANS
C 053452
Exp. 6/30/09
CIVIL
STATE OF CALIFORNIA

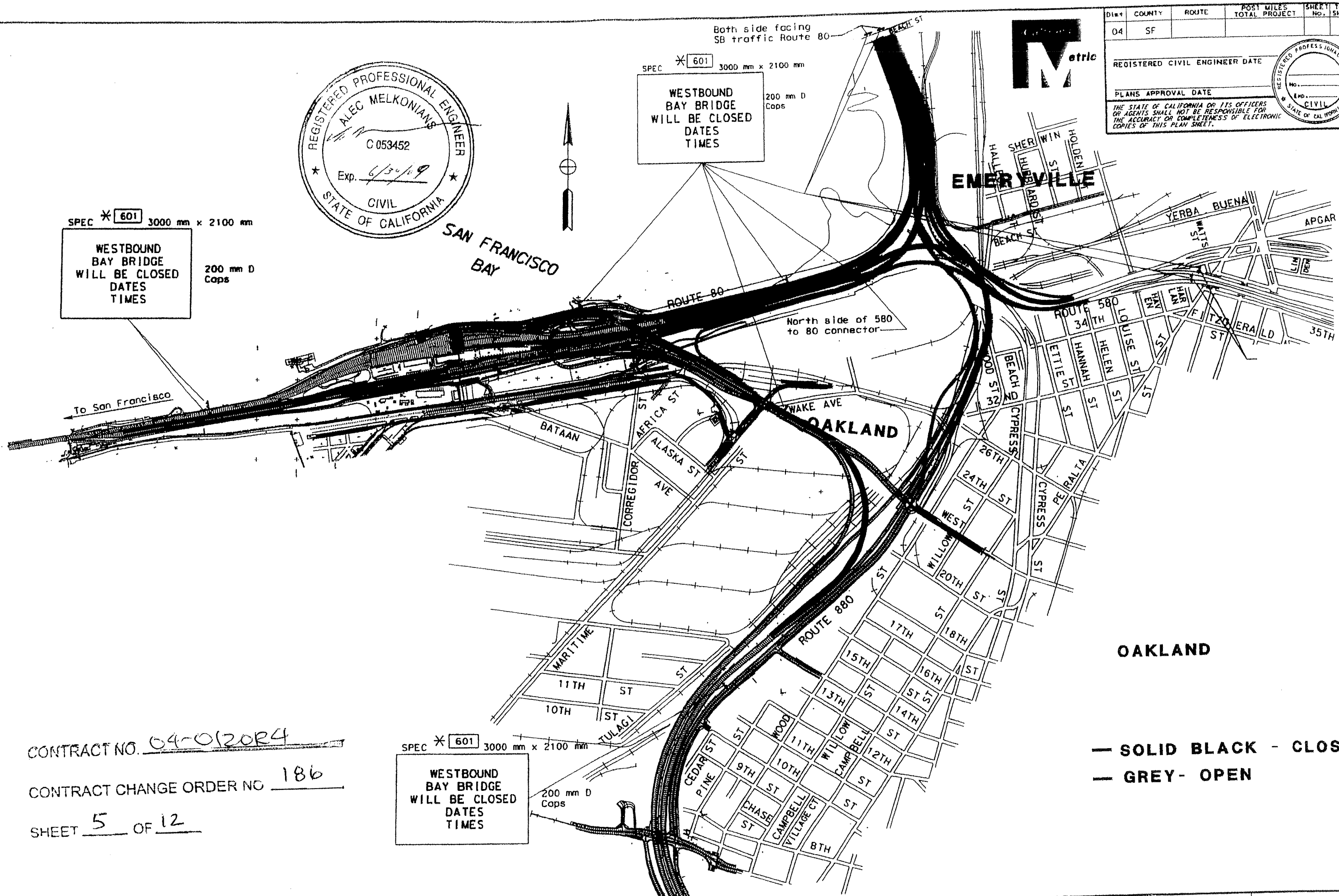

OAKLAND

— SOLID BLACK - CLOSED

— GREY- OPEN

CONTRACT NO. 04-0120R4

CONTRACT CHANGE ORDER NO 186

SHEET 5 OF 12

STATE OF CALIFORNIA - DEPARTMENT OF TRANSPORTATION

Caltrans

FUNCTIONAL SUPERVISOR

CALCULATED-DESIGNED BY

CHECKED BY

REVISED BY

DATE REVISED

40120rm08.dgn 5/31/2007 11:24:17 AM

RELATIVE BORDER SCALE IS IN INCHES 0 1 2 3

USERNAME => $USER
DGN FILE => $REQUEST

EA 0120R4

DIST	COUNTY	ROUTE	KILOMETER POST TOTAL PROJECT	SHEET NO	TOTAL SHEET
04	SF				

STATE OF CALIFORNIA
DEPARTMENT OF TRANSPORTATION

SAN FRANCISCO EASTBOUND MAINLINE CLOSURE

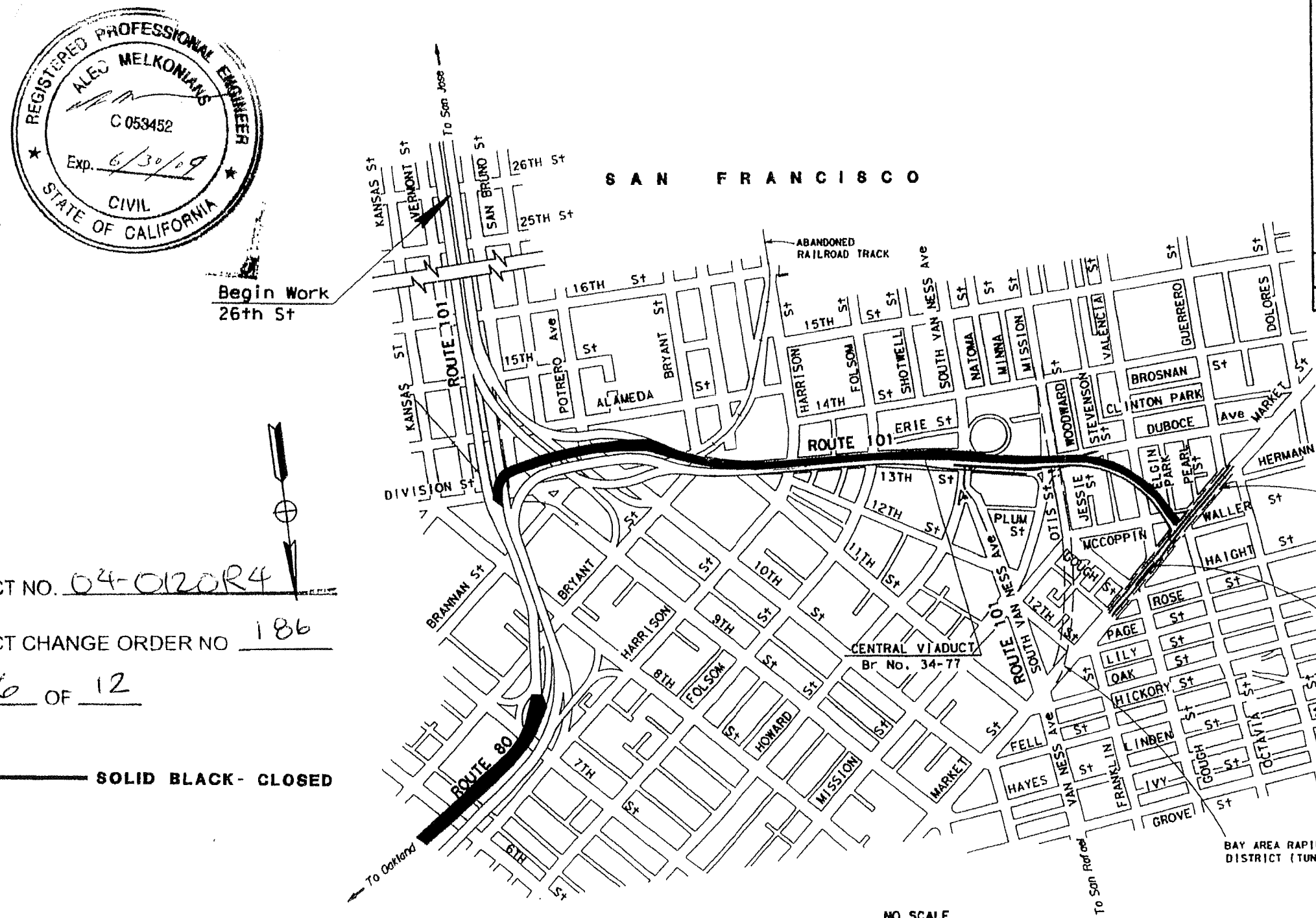

NO SCALE

Caltrans

The State of California or its officers or agents shall not be responsible for the accuracy or completeness of electronic copies of this plan sheet.

Caltrans now has a web site! To get to the web site, go to: http://www.dot.ca.gov

Caltrans Metric

CONTRACT NO. 04-0120R4

CONTRACT CHANGE ORDER NO 186

SHEET 6 OF 12

SOLID BLACK- CLOSED

REGISTERED PROFESSIONAL ENGINEER
ALEC MELKONIANS
C 053452
Exp. 6/30/09
CIVIL
STATE OF CALIFORNIA

Project Engineer Date
Registered Civil Engineer

Plans Approval Date

REGISTERED PROFESSIONAL ENGINEER
NO.
Exp.
CIVIL
STATE OF CALIFORNIA

PROJECT ENGINEER | DATE | PROJECT MANAGER | DATE

The Contractor shall possess the Class (or classes) of license as specified in the "Notice to Contractors".

LAST REVISION

DIST	COUNTY	ROUTE	KILOMETER POST TOTAL PROJECT	SHEET NO.	TOTAL SHEETS
04	SF				

SAN FRANCISCO EASTBOUND MAINLINE CLOSURE

REGISTERED PROFESSIONAL ENGINEER
ALEC MELKONIANS
C 053452
Exp. 6/30/09
CIVIL
STATE OF CALIFORNIA

LOCATION MAP

Caltrans

The State of California or its officers or agents shall not be responsible for the accuracy or completeness of electronic copies of this plan sheet.

Caltrans now has a web site! To get to the web site, go to: http://www.dot.ca.gov

Caltrans Metric

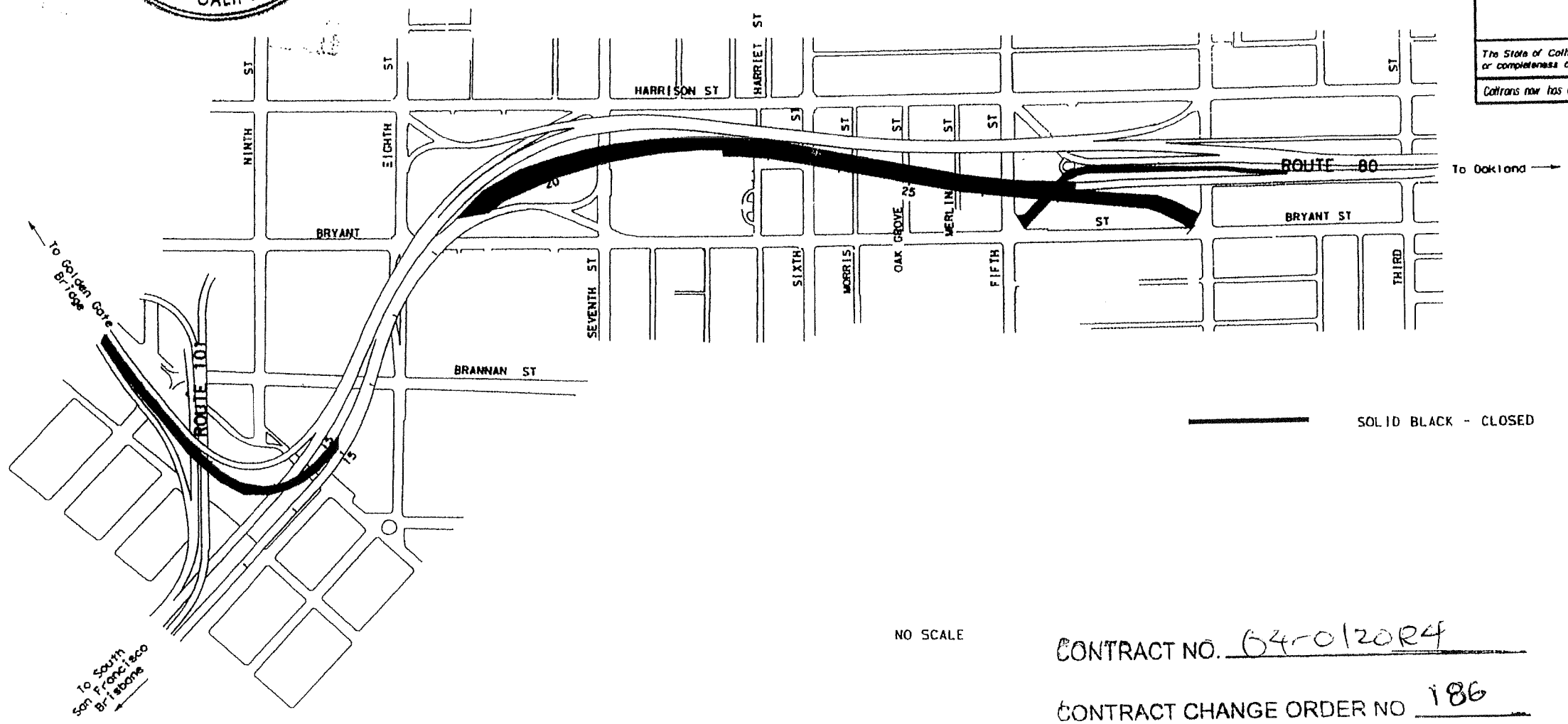

SOLID BLACK - CLOSED

NO SCALE

Approved as to Features Affecting City and County of San Francisco Facilities

Project Engineer Date
Registered Civil Engineer

REGISTERED PROFESSIONAL ENGINEER
NO.
EXP.
CIVIL
STATE OF CALIFORNIA

CONTRACT NO. 04-0120R4

CONTRACT CHANGE ORDER NO 186

SHEET 7 OF 12

The Contractor shall possess the Class (or Classes) of license as specified in the "Notice to Contractors".

PROJECT ENGINEER	DATE	PROJECT MANAGER	DATE

424821.a.dgn 5/31/2007 2:10:26 PM	FOR REDUCED PLANS ORIGINAL SCALE IS IN MILLIMETERS 0 20 40 60 80	USERNAME => $USER DGN FILE => $REQUEST	CU	EA 0120R4

LABOR DAY WEEKEND
LOCAL PCMS'S

			THUR, AUGUST 20, 2009 (Turn on signs before 12 PM)		MON, AUGUST 31, 2009 (Turn on signs after 5 AM)		THUR, SEPTEMBER 3, 2009 (Turn on signs after 5 AM))		
							FULL EB 80 CLOSED		
	CMS		First Panel	Second Panel	First Panel	Second Panel	First Panel	Second Panel	
	IP-1	NB Fremont St @ Howard St, Place on the (ES) right side of road ~ 100 ft from intersection. Facing off-ramp traffic.			I-80 BAY BRDG CLOSURE	SEPT 3 THRU SEPT 8	BAY BRIDGE CLOSED	DETOUR LEFT AT HOWARD	2
	IP-2	WB Howard St, between 2nd and 3rd St. Place on the (NS) right side of the road midblock.			I-80 BAY BRDG CLOSURE	SEPT 3 THRU SEPT 8	BAY BRDG DETOUR STRAIGHT	LEFT AT 4TH ST	2
	IP-3	WB Howard St, between 3rd and 4th St. Place on the (SS) left side of the road.			I-80 BAY BRDG CLOSURE	SEPT 3 THRU SEPT 8	BAY BRDG DETOUR AHEAD	LEFT AT 4TH ST	2
	IP-4	SB Main St, between Bryant and Harrison St. Place midblock on the (WS) right side of the road.			I-80 BAY BRDG CLOSURE	SEPT 3 THRU SEPT 8	BAY BRIDGE CLOSED	USE 280S TO 101S TO 92E	2
#	IP-5	SB 1st St, between Folsom and Howard St. Place midblock on the (WS) right side of road.					BAY BRIDGE CLOSED	DETOUR RIGHT AT HARRISON	3
***	IP-6	SB 1st St @ Harrison St Place near the first street on-ramp	I-80 BAY BRDG CLOSURE	SEPT 3 THRU SEPT 8	I-80 BAY BRDG CLOSURE	SEPT 3 THRU SEPT 8	BAY BRIDGE CLOSED	DETOUR RIGHT AT HARRISON	1
#	IP-7	NB 2nd St, between Brannan and Bryant St Place midblock on the (ES) right side of the road.					BAY BRIDGE CLOSED	DETOUR LEFT AT HARRISON	3
	IP-8	NB 2nd St @ Harrison St Place on the (ES) right side of the road at corner.			I-80 BAY BRDG CLOSURE	SEPT 3 THRU SEPT 8	BAY BRIDGE CLOSED	DETOUR LEFT AT HARRISON	2
#	IP-9	SB 2nd St, between Folsom and Harrison St. Place on the (WS) right side of the road.					BAY BRIDGE CLOSED	DETOUR RIGHT AT HARRISON	3
#	IP-10	NB 3rd St, between Bryant and Harrison St. Place midblock on the (ES) right side of the road.					BAY BRIDGE CLOSED	DETOUR LEFT AT HARRISON	3
	IP-11	WB Harrison St, between 3rd & 4th St. Place on the (NS) right side of the road.			I-80 BAY BRDG CLOSURE	SEPT 3 THRU SEPT 8	BAY BRIDGE CLOSED	DETOUR USE 101S TO 92 E	2
	IP-12	NB 7th St @ south of Harrison St Place on the (ES) right side of the road.			I-80 BAY BRDG CLOSURE	SEPT 3 THRU SEPT 8	BAY BRDG DETOUR <--------	DETOUR USE 101S TO 92 E	2
	IP-13	SB 8th St @ south of Bryant St Placed at left side.			I-80 BAY BRDG CLOSURE	SEPT 3 THRU SEPT 8	BAY BRDG DETOUR <--------	DETOUR USE 101S TO 92 E	2
***	IP-14	7th St Off-Ramp (i.e. EB 80) Placed at the island for the left lanes (Arrow points to NB 7th St.)	I-80 BAY BRDG CLOSURE	SEPT 3 THRU SEPT 8	I-80 BAY BRDG CLOSURE	SEPT 3 THRU SEPT 8	BAY BRDG DETOUR <--------	DETOUR USE 101S TO 92 E	1
	IP-15	EB Bryant St, between 7th St. and 8th St. Placed on the (NS) left side of the road.			I-80 BAY BRDG CLOSURE	SEPT 3 THRU SEPT 8	BAY BRIDGE CLOSED	DETOUR LEFT AT 7TH ST	2
	IP-16	EB Bryant St, between 6th St. and 7th St. Placed on the (NS) left side of the road.			I-80 BAY BRDG CLOSURE	SEPT 3 THRU SEPT 8	BAY BRIDGE CLOSED	DETOUR RIGHT AT 6TH ST	2
	IP-17	EB Bryant St, between 5th St. and 6th St. Placed on the (NS) left side of the road.	I-80 BAY BRDG CLOSURE	SEPT 3 THRU SEPT 8	I-80 BAY BRDG CLOSURE	SEP-3 THRU SEP-8	BAY BRIDGE CLOSED	DETOUR LEFT AT 5TH ST	1
	IP-18	EB Bryant St, between 4th St. and 5th St. Placed on the (NS) left side of the road.			I-80 BAY BRDG CLOSURE	SEPT 3 THRU SEPT 8	BAY BRIDGE CLOSED	DETOUR LEFT AT 3RD ST	2
#	IP-19	SB 6th St, between Brannan St. and Bryant St. Placed on the (WS) right side of the road.					BAY BRIDGE CLOSED	USE 280S TO 101S TO 92E	3
#	IP-20	NB 6th St, between Bryant St. and Harrison St Placed on the (ES) right side of the road.					BAY BRDG DETOUR <--------	DETOUR USE 101S TO 92 E	3
	IP-21	NB 5th St, between Bryant St. and Harrison St. Placed on the (ES) right side of the road.			I-80 BAY BRDG CLOSURE	SEPT 3 THRU SEPT 8	BAY BRDG DETOUR <--------	DETOUR USE 101S TO 92 E	2
	IP-22	EB Bryant St, between 3rd St. and 4th St. Placed on the (NS) left side of the road.			I-80 BAY BRDG CLOSURE	SEPT 3 THRU SEPT 8	BAY BRIDGE CLOSED	DETOUR LEFT AT 3RD ST	2
	IP-23	EB Bryant St, between 2nd and 3rd St. Placed on the (NS) left side of the road.			I-80 BAY BRDG CLOSURE	SEPT 3 THRU SEPT 8	BAY BRIDGE CLOSED	DETOUR LEFT AT 2ND ST	2
	IP-24	NB 2nd St, between Brannan and Townsend St. Placed on the (ES) right side of the road.			I-80 BAY BRDG CLOSURE	SEPT 3 THRU SEPT 8	BAY BRDG DETOUR <--------	USE 280S TO 101S TO 92E	2
***	IP-25	WB Bryant St. @ 4th St. in the SE corner. Across from the gas station, facing off-ramp traffic.	I-80 BAY BRDG CLOSURE	SEPT 3 THRU SEPT 8	I-80 BAY BRDG CLOSURE	SEPT 3 THRU SEPT 8	BAY BRIDGE CLOSED	DETOUR STRAIGHT	1
	IP-26	NB Embarcadero @ Bryant St Place on the (ES) right side of the road.			I-80 BAY BRDG CLOSURE	SEPT 3 THRU SEPT 8	BAY BRIDGE CLOSED	DETOUR LEFT AT HOWARD	2
	IP-27	SB Embarcadero @ Bryant St Place on the (WS) right side of the road.			I-80 BAY BRDG CLOSURE	SEPT 3 THRU SEPT 8	BAY BRIDGE CLOSED	DETOUR RIGHT AT KING	2
	IP-28	SB Beale St., between Bryant St. and Folsom St Place on the (WS) right side, ~150' north of Bryant St.			I-80 BAY BRDG CLOSURE	SEPT 3 THRU SEPT 8	BAY BRDG DETOUR <--------	RIGHT AT EMBARCA-DERO	2
	IP-29	WB Harrison St between Main St and Fremont Place midblock on the (NS) right side.					BAY BRDG DETOUR STRAIGHT	DETOUR USE 101S TO 92 E	3
***	IP-30	SB South Van Ness Ave and 13th St (small CMS) Place in the gore area.	I-80 BAY BRDG CLOSURE	SEPT 3 THRU SEPT 8	I-80 BAY BRDG CLOSURE	SEPT 3 THRU SEPT 8	BAY BRIDGE CLOSED	DETOUR USE 101S TO 92 E	1
***	IP-31	EB Oak St, ~ 200' south of Octavia Blvd. (small CMS) Place on the (SS) right side.	I-80 BAY BRDG CLOSURE	SEPT 3 THRU SEPT 8	I-80 BAY BRDG CLOSURE	SEPT 3 THRU SEPT 8	BAY BRIDGE CLOSED	DETOUR USE 101S TO 92 E	1
	IP-32	WB 80 (Near Yerba Buena Island) East side of the tunnel Place at the YBI Off-Ramp / gore area	I-80 BAY BRDG CLOSURE	SEPT 3 THRU SEPT 8	I-80 BAY BRDG CLOSURE	SEPT 3 THRU SEPT 8	BAY BRIDGE CLOSED	DETOUR USE 101S TO 92 E	1
	IP-33	EB Bush St, 100' west of Battery St (small CMS) Place on the (NS) left side of Bush St.					BAY BRIDGE CLOSED	DETOUR USE 101S TO 92 E	3
	IP-34	SB Battery St, north of Bush St (small CMS) Place on (WS) right side of street					BAY BRIDGE CLOSED	DETOUR USE 101S TO 92 E	3
	IP-35	EB Folsom St, between 7th St and 8th St. Place on (SS) right side of road.					BAY BRIDGE CLOSED	DETOUR RIGHT AT 7TH ST	3
	IP-36	EB Folsom between 5th St and 6th St. Place on (SS) right side of road.					BAY BRIDGE CLOSED	DETOUR RIGHT AT 4TH ST	3
	IP-37	EB Folsom St, between 4th St and 5th St Placed on (SS) right side of road	I-80 BAY BRDG CLOSURE	SEPT 3 THRU SEPT 8	I-80 BAY BRDG CLOSURE	SEPT 3 THRU SEPT 8	BAY BRIDGE CLOSED	DETOUR RIGHT AT 4TH ST	1
	IP-38	SB 1st St, between Mission and Howard St. Place on (ES) left side of road.	I-80 BAY BRDG CLOSURE	SEPT 3 THRU SEPT 8	I-80 BAY BRDG CLOSURE	SEPT 3 THRU SEPT 8	BAY BRIDGE CLOSED	DETOUR RIGHT AT HOWARD	1
***	IP-39	EB Folsom St, btwn 8th St. and 9th St Place on (SS) right side of road.	I-80 BAY BRDG CLOSURE	SEPT 3 THRU SEPT 8	I-80 BAY BRDG CLOSURE	SEPT 3 THRU SEPT 8	BAY BRIDGE CLOSED	DETOUR RIGHT AT 7TH ST	1
#	IP-40	EB Bush St, west of Hyde St (small CMS) Place on the (SS) right side of road.					BAY BRIDGE CLOSED	UNTIL TUESDAY 5 AM	3
	IP-41	SB Octavia Blvd @ Market St (small CMS) Place on the (SS) right side near the plaza Do not block bike lane	I-80 BAY BRDG CLOSURE	SEPT 3 THRU SEPT 8	I-80 BAY BRDG CLOSURE	SEPT 3 THRU SEPT 8	BAY BRIDGE CLOSED	UNTIL TUESDAY 5 AM	1
	IP-42	NB Junipero Serra Blvd. before Ocean Ave (Small CMS) Place on the (ES) right side.	I-80 BAY BRDG CLOSURE	SEPT 3 THRU SEPT 8	I-80 BAY BRDG CLOSURE	SEPT 3 THRU SEPT 8	BAY BRIDGE CLOSED	UNTIL TUESDAY 5 AM	1

CONTRACT NO. 04-0120R4
CONTRACT CHANGE ORDER NO 186
SHEET 8 OF 12

REGISTERED PROFESSIONAL ENGINEER
DOUGLAS A. JOHNSON
No. C 52971
Exp. 12-31-10
CIVIL
STATE OF CALIFORNIA

LABOR DAY WEEKEND
LOCAL PCMS'S

	CMS		THUR, AUGUST 20, 2009 (Turn on signs before 12 PM)		MON, AUGUST 31, 2009 (Turn on signs after 5 AM)		THUR, SEPTEMBER 3, 2009 (Turn on signs after 5 AM))		
							FULL EB 80 CLOSED		
			First Panel	Second Panel	First Panel	Second Panel	First Panel	Second Panel	
	IP-43	NB 3rd St, after Evans St Place on the right side.	I-80 BAY BRDG CLOSURE	SEPT 3 THRU SEPT 8	I-80 BAY BRDG CLOSURE	SEPT 3 THRU SEPT 8	BAY BRIDGE CLOSED	UNTIL TUESDAY 5 AM	1
	IP-44	NB Alemany Blvd, after Geneva Ave Place on the right side	I-80 BAY BRDG CLOSURE	SEPT 3 THRU SEPT 8	I-80 BAY BRDG CLOSURE	SEPT 3 THRU SEPT 8	BAY BRIDGE CLOSED	UNTIL TUESDAY 5 AM	1
	IP-45	WB Geneva Ave, before San Jose Ave Place on the right side	I-80 BAY BRDG CLOSURE	SEPT 3 THRU SEPT 8	I-80 BAY BRDG CLOSURE	SEPT 3 THRU SEPT 8	BAY BRIDGE CLOSED	UNTIL TUESDAY 5 AM	1
	IP-46	EB Oak St, before Masonic Ave	I-80 BAY BRDG CLOSURE	SEPT 3 THRU SEPT 8	I-80 BAY BRDG CLOSURE	SEPT 3 THRU SEPT 8	BAY BRIDGE CLOSED	UNTIL TUESDAY 5 AM	1
	IP-47	NB 19th Ave, after Lincoln Way (Small CMS) Place in the grass area on the right side Please make sure it is not blocked by the column.	I-80 BAY BRDG CLOSURE	SEPT 3 THRU SEPT 8	I-80 BAY BRDG CLOSURE	SEPT 3 THRU SEPT 8	BAY BRIDGE CLOSED	UNTIL TUESDAY 5 AM	1
	IP- 48	NB Embarcadero @ Bay St Place on the (ES) right side.	I-80 BAY BRDG CLOSURE	SEPT 3 THRU SEPT 8	I-80 BAY BRDG CLOSURE	SEPT 3 THRU SEPT 8	BAY BRIDGE CLOSED	UNTIL TUESDAY 5 AM	1
	IP-49	SB Van Ness Ave. south of Union St. Place on the (WS) right side.	I-80 BAY BRDG CLOSURE	SEPT 3 THRU SEPT 8	I-80 BAY BRDG CLOSURE	SEPT 3 THRU SEPT 8	BAY BRIDGE CLOSED	UNTIL TUESDAY 5 AM	1
	IP-50	280/101S gore point	I-80 BAY BRDG CLOSURE	SEPT 3 THRU SEPT 8	I-80 BAY BRDG CLOSURE	SEPT 3 THRU SEPT 8	BAY BRIDGE CLOSED	UNTIL TUESDAY 5 AM	1
	IP-51	NB 280 before Geneva Ave	I-80 BAY BRDG CLOSURE	SEPT 3 THRU SEPT 8	I-80 BAY BRDG CLOSURE	SEPT 3 THRU SEPT 8	BAY BRIDGE CLOSED	UNTIL TUESDAY 5 AM	1
	IP-52	NB 280 before 101 split	I-80 BAY BRDG CLOSURE	SEPT 3 THRU SEPT 8	I-80 BAY BRDG CLOSURE	SEPT 3 THRU SEPT 8	BAY BRIDGE CLOSED	UNTIL TUESDAY 5 AM	1
	IP-53	NB 280 before Mariposa St	I-80 BAY BRDG CLOSURE	SEPT 3 THRU SEPT 8	I-80 BAY BRDG CLOSURE	SEPT 3 THRU SEPT 8	BAY BRIDGE CLOSED	UNTIL TUESDAY 5 AM	1
	IP-54	SB Mission St before Caesar Chavez St. Place on the (WS) right side	I-80 BAY BRDG CLOSURE	SEPT 3 THRU SEPT 8	I-80 BAY BRDG CLOSURE	SEPT 3 THRU SEPT 8	BAY BRIDGE CLOSED	UNTIL TUESDAY 5 AM	1
	IP-55	NB Bayshore Blvd, North of Sunnydale Ave. Place on the (ES) right side.	I-80 BAY BRDG CLOSURE	SEPT 3 THRU SEPT 8	I-80 BAY BRDG CLOSURE	SEPT 3 THRU SEPT 8	BAY BRIDGE CLOSED	UNTIL TUESDAY 5 AM	1
	IP-56	EB Folsom St at 2nd St. Place on the (SS) right side	I-80 BAY BRDG CLOSURE	SEPT 3 THRU SEPT 8	I-80 BAY BRDG CLOSURE	SEPT 3 THRU SEPT 8	BAY BRIDGE CLOSED	DETOUR RIGHT AT 2ND ST	1
	IP-57	WB Harrison St., brwn bus off-ramp and 2nd St. Place on the (NS) right side	I-80 BAY BRDG CLOSURE	SEPT 3 THRU SEPT 8	I-80 BAY BRDG CLOSURE	SEPT 3 THRU SEPT 8	BAY BRIDGE CLOSED	DETOUR STRAIGHT	1
	IP-58	SB 5th St . between Howard St. and Folsom St. Place on the (WS) right side	I-80 BAY BRDG CLOSURE	SEPT 3 THRU SEPT 8	I-80 BAY BRDG CLOSURE	SEPT 3 THRU SEPT 8	BAY BRIDGE CLOSED	DETOUR RIGHT AT HARRISON	1
	IP-59	SB South Van Ness, after Market St. Place on the (WS) right side near the Honda Dealership, but away from their driveways.	I-80 BAY BRDG CLOSURE	SEPT 3 THRU SEPT 8	I-80 BAY BRDG CLOSURE	SEPT 3 THRU SEPT 8	BAY BRIDGE CLOSED	DETOUR USE 101S TO 92E	1
	IP-60	EB Geary St. at Van Ness Ave. Place on the (SS) right side					BAY BRIDGE CLOSED	UNTIL TUESDAY 5 AM	3
	IP-61	SB Beale St., between Folsom St. & Bryant St. Place on (WS) right side, 150' north of Bryant St.	I-80 BAY BRDG CLOSURE	SEPT 3 THRU SEPT 8	I-80 BAY BRDG CLOSURE	SEPT 3 THRU SEPT 8	BAY BRIDGE CLOSED	DETOUR LEFT AT BRYANT	1
	IP-62	SB Van Ness Ave. at California St. (Small CMS) Place on the (WS) right side.	I-80 BAY BRDG CLOSURE	SEPT 3 THRU SEPT 8	I-80 BAY BRDG CLOSURE	SEPT 3 THRU SEPT 8	BAY BRIDGE CLOSED	UNTIL TUESDAY 5 AM	1
	IP-63	NB Van Ness Ave., at Lombard St (Small CMS) Place on the (ES) right side.	I-80 BAY BRDG CLOSURE	SEPT 3 THRU SEPT 8	I-80 BAY BRDG CLOSURE	SEPT 3 THRU SEPT 8	BAY BRIDGE CLOSED	UNTIL TUESDAY 5 AM	1
	IP-64	WB Lombard St. at Divisadero	I-80 BAY BRDG CLOSURE	SEPT 3 THRU SEPT 8	I-80 BAY BRDG CLOSURE	SEPT 3 THRU SEPT 8	BAY BRIDGE CLOSED	UNTIL TUESDAY 5 AM	1
	IP-65	NB 19th Ave at Sloat Blvd. (Small CMS) Place on the (ES) right side after Sloat Blvd, outside of bus zone.	I-80 BAY BRDG CLOSURE	SEPT 3 THRU SEPT 8	I-80 BAY BRDG CLOSURE	SEPT 3 THRU SEPT 8	BAY BRIDGE CLOSED	UNTIL TUESDAY 5 AM	1
	IP-66	NB Park Presidio Blvd at Geary Blvd. Place on the (ES) right side.	I-80 BAY BRDG CLOSURE	SEPT 3 THRU SEPT 8	I-80 BAY BRDG CLOSURE	SEPT 3 THRU SEPT 8	BAY BRIDGE CLOSED	UNTIL TUESDAY 5 AM	1
	IP-67	SB Embarcadero at the Ferry Building. Place on the (WS) right side.					BAY BRIDGE CLOSED	UNTIL TUESDAY 5 AM	3
	IP-68	EB Broadway between Davis St. and Embarcadero Place on the (SS) right side, before the "KEEP CLEAR" approaching Embarcadero	I-80 BAY BRDG CLOSURE	SEPT 3 THRU SEPT 8	I-80 BAY BRDG CLOSURE	SEPT 3 THRU SEPT 8	BAY BRIDGE CLOSED	UNTIL TUESDAY 5 AM	1
	OAKLAND								
	IP-82	Webster Street (Posey Tube) in Alameda	I-80 BAY BRDG CLOSURE	SEPT 3 THRU SEPT 8	I-80 BAY BRDG CLOSURE	SEPT 3 THRU SEPT 8	BAY BRIDGE CLOSED	UNTIL TUESDAY 5 AM	

	DPT CMS 1	SB Embarcadero, between Howard St. and Mission St. on the west side	I-80 BAY BRDG CLOSURE	SEPT 3 THRU SEPT 8	I-80 BAY BRDG CLOSURE	SEPT 3 THRU SEPT 8	BAY BRIDGE CLOSED	DETOUR RIGHT AT HOWARD	
	DPT CMS 2	EB King St., between Embarcadero and 2nd St. on the north side	I-80 BAY BRDG CLOSURE	SEPT 3 THRU SEPT 8	I-80 BAY BRDG CLOSURE	SEPT 3 THRU SEPT 8	BAY BRIDGE CLOSED	UNTIL TUESDAY 5 AM	
	DPT CMS 3	NB 9th St., between Folsom St. and Howard St on the east side	I-80 BAY BRDG CLOSURE	SEPT 3 THRU SEPT 8	I-80 BAY BRDG CLOSURE	SEPT 3 THRU SEPT 8	BAY BRIDGE CLOSED	UNTIL TUESDAY 5 AM	
	DPT CMS 4	SB 10th St . between Folsom St. and Howard St.	I-80 BAY BRDG CLOSURE	SEPT 3 THRU SEPT 8	I-80 BAY BRDG CLOSURE	SEPT 3 THRU SEPT 8	BAY BRIDGE CLOSED	DETOUR USE 101S TO 92E	
	DPT CMS 5	WB King St., between 2nd St. and 3rd St. on the north side	I-80 BAY BRDG CLOSURE	SEPT 3 THRU SEPT 8	I-80 BAY BRDG CLOSURE	SEPT 3 THRU SEPT 8	BAY BRIDGE CLOSED	UNTIL TUESDAY 5 AM	
	DPT CMS 6	WB King St., between 3rd St. and 4th St. on the north side	I-80 BAY BRDG CLOSURE	SEPT 3 THRU SEPT 8	I-80 BAY BRDG CLOSURE	SEPT 3 THRU SEPT 8	BAY BRIDGE DETOUR	USE 280S TO 101S TO 92E	
	DPT CMS 7	NB 3rd St (bridge) north of Terry A. Francois Blvd.	I-80 BAY BRDG CLOSURE	SEPT 3 THRU SEPT 8	I-80 BAY BRDG CLOSURE	SEPT 3 THRU SEPT 8	BAY BRIDGE CLOSED	DETOUR LEFT AT KING ST.	
	DPT CMS 8	SB 3rd St (bridge) south of Berry St. (currently not working)							
	DPT/ Caltrans CMS 9	SB 4th St., between Folsom St. and Howard St on the west side south of Clementina	I-80 BAY BRDG CLOSURE	SEP-3 THRU SEP-8	I-80 BAY BRDG CLOSURE	SEP-3 THRU SEP-8	BAY BRIDGE CLOSED	DETOUR USE 101S TO 92 E	
	DPT/ Caltrans CMS 10	EB Bryant St., between 2nd St. and 3rd St. on the south side.	I-80 BAY BRDG CLOSURE	SEP-3 THRU SEP-8	I-80 BAY BRDG CLOSURE	SEP-3 THRU SEP-8	BAY BRIDGE CLOSED	UNTIL TUESDAY 5 AM	

CONTRACT NO. 04-0120R4
CONTRACT CHANGE ORDER NO 186
SHEET 9 OF 12

REGISTERED PROFESSIONAL ENGINEER
DOUGLAS A. JOHNSON
No. C 52971
Exp. 12-31-10
CIVIL
STATE OF CALIFORNIA

LABOR DAY WEEKEND BAY BRIDGE CLOSURE @ YBI

Contract # 04 0120R4
7/15/2009

SFOBB SSD PROJECT (EB)								LABOR DAY WEEKEND IP ADDRESSABLE PCMS'S					
No	County	Fwy Dir	Rte	Sec. #	page #	PM	PCMS Location	15-Aug-09 (Turn on Signs before Noon)		28-Aug-09 (Turn on Signs after 5 AM)		THURS SEP 3 @8:00 PM THRU TUE SEPT 8 (5 AM) Turn on Signs.	
								First Panel	Second panel	First Panel	Second panel	First Panel	Second Panel
								I-80	SEP - 3	BAY BRDG	THUR 8 PM	I-80	8PM SEP 3
IP-83	SOL	WB	80	Sec 2	p1	0.4	WB Route 80	BAY BRDG	THRU	CLOSURE	THRU	BAY BRDG	TO
							At Cordelia junction	CLOSURE	SEP - 8	SEP 3-8	TUE 5 AM	CLOSED	5AM SEP 8
							WB Route 80	I-80	SEP - 3	BAY BRDG	THUR 8 PM	I-80	8PM SEP 3
IP-84	SOL	WB	80	Sec 2	p5	8.6	EAST of American	BAY BRDG	THRU	CLOSURE	THRU	BAY BRDG	TO
							Canyon Rd	CLOSURE	SEP - 8	SEP 3-8	TUE 5 AM	CLOSED	5AM SEP 8
								I-80	SEP - 3	BAY BRDG	THUR 8 PM	I-80	8PM SEP 3
IP-85	SOL	WB	80	Sec 2	p 5	0.7	WB Route 80 At	BAY BRDG	THRU	CLOSURE	THRU	BAY BRDG	TO
							EAST of Carquinez Bridge	CLOSURE	SEP - 8	SEP 3-8	TUE 5 AM	CLOSED	5AM SEP 8
								I-80	SEP - 3	BAY BRDG	THUR 8 PM	I-80	8PM SEP 3
IP-86	CC	WB	80	Sec 2	p 5		WB Route 80 East of	BAY BRDG	THRU	CLOSURE	THRU	BAY BRDG	TO
							Richmond Parkway	CLOSURE	SEP - 8	SEP 3-8	TUE 5 AM	CLOSED	5AM SEP 8
								I-80	SEP - 3	BAY BRDG	THUR 8 PM	I-80	8PM SEP 3
IP-87	CC			Sec 2	p 6	2.7	East Of McDonald	BAY BRDG	THRU	CLOSURE	THRU	BAY BRDG	TO
							Ave	CLOSURE	SEP - 8	SEP 3-8	TUE 5 AM	CLOSED	5AM SEP 8
								I-80	SEP - 3	BAY BRDG	THUR 8 PM	I-80	8PM SEP 3
IP-88	CC	WB	24	Sec 2	p 6	2.4	WB Route 24 East of	BAY BRDG	THRU	CLOSURE	THRU	BAY BRDG	TO
							Camino Pablo	I-80	SEP - 3	BAY BRDG	THUR 8 PM	I-80	8PM SEP 3
								I-80	SEP - 3	BAY BRDG	THUR 8 PM	I-80	8PM SEP 3
IP-89	AL	WB	580			2.9	WB Route 580 West of	BAY BRDG	THRU	CLOSURE	THRU	BAY BRDG	TO
							WB Route 80	CLOSURE	SEP - 8	SEP 3-8	TUE 5 AM	CLOSED	5AM SEP 8
								I-80	SEP - 3	BAY BRDG	THUR 8 PM	I-80	8PM SEP 3
IP-90	AL	WB	580	Sec 4	p10		WB Route 580 AT	BAY BRDG	THRU	CLOSURE	THRU	BAY BRDG	TO
							Castro Valley "Y"	CLOSURE	SEP - 8	SEP 3-8	TUE 5 AM	CLOSED	5AM SEP 8
								I-80	SEP - 3	BAY BRDG	THUR 8 PM	I-80	8PM SEP 3
IP-91	AL	NB	880	Sec 4	p10		NB Route 880 South of	BAY BRDG	THRU	CLOSURE	THRU	BAY BRDG	TO
							Route 92	CLOSURE	SEP - 8	SEP 3-8	TUE 5 AM	CLOSED	5AM SEP 8
								I-80	SEP - 3	BAY BRDG	THUR 8 PM	I-80	8PM SEP 3
IP-92	AL	WB	80	Sec 2	p 6	7.5	WB Route 80 AT	BAY BRDG	THRU	CLOSURE	THRU	BAY BRDG	TO
							EB Route 580 Split	CLOSURE	SEP - 8	SEP 3-8	TUE 5 AM	CLOSED	5AM SEP 8
								I-80	SEP - 3	BAY BRDG	THUR 8 PM	I-80	8PM SEP 3
IP-93	AL	WB	80	Sec 2	p 6	7.6	WB Route 580 EB	BAY BRDG	THRU	CLOSURE	THRU	BAY BRDG	TO
							Route 80 Split	CLOSURE	SEP - 8	SEP 3-8	TUE 5 AM	CLOSED	5AM SEP 8
								I-80	SEP - 3	BAY BRDG	THUR 8 PM	I-80	8PM SEP 3
IP-94	AL	WB	24	Sec 2	p 6	3.1	WB Route 24 East	BAY BRDG	THRU	CLOSURE	THRU	BAY BRDG	TO
							of Telegraph Ave.	CLOSURE	SEP - 8	SEP 3-8	TUE 5 AM	CLOSED	5AM SEP 8
								I-80	SEP - 3	BAY BRDG	THUR 8 PM	I-80	8PM SEP 3
IP-95	AL	NB	880	Sec 2	p 6	31.1	NB Route 880 South of	BAY BRDG	THRU	CLOSURE	THRU	BAY BRDG	TO
							Oak St South of 5th	CLOSURE	SEP - 8	SEP 3-8	TUE 5 AM	CLOSED	5AM SEP 8
								I-80	SEP - 3	BAY BRDG	THUR 8 PM	I-80	8PM SEP 3
IP-96	AL	EB	980	Sec 2	p 6	0.8	EB Route 980 South of	BAY BRDG	THRU	CLOSURE	THRU	BAY BRDG	TO
							14th St	CLOSURE	SEP - 8	SEP 3-8	TUE 5 AM	CLOSED	5AM SEP 8
								I-80	SEP - 3	BAY BRDG	THUR 8 PM	I-80	8PM SEP 3
IP-97	AL	WB	580	Sec 2	p 6		WB Route 580 AT	BAY BRDG	THRU	CLOSURE	THRU	BAY BRDG	TO
							Grand Ave Viaduct	CLOSURE	SEP - 8	SEP 3-8	TUE 5 AM	CLOSED	5AM SEP 8
								I-80	SEP - 3	BAY BRDG	THUR 8 PM	I-80	8PM SEP 3
IP-98	CC	WB	4				WB Route 4	BAY BRDG	THRU	CLOSURE	THRU	BAY BRDG	TO
							East Of Route 242	CLOSURE	SEP - 8	SEP 3-8	TUE 5 AM	CLOSED	5AM SEP 8
								I-80	SEP - 3	BAY BRDG	THUR 8 PM	I-80	8PM SEP 3
IP-99	AL	NB	880			10.4	NB 880 South of	BAY BRDG	THRU	CLOSURE	THRU	BAY BRDG	TO
							Route 84	CLOSURE	SEP - 8	SEP 3-8	TUE 5 AM	CLOSED	5AM SEP 8
								I-80	SEP - 3	BAY BRDG	THUR 8 PM	I-80	8PM SEP 3
IP-100	CC	SB	680				SB Route 680 prior to	BAY BRDG	THRU	CLOSURE	THRU	BAY BRDG	TO
							Route 680 I/C	CLOSURE	SEP - 8	SEP 3-8	TUE 5 AM	CLOSED	5AM SEP 8
								I-80	SEP - 3	BAY BRDG	THUR 8 PM	I-80	8PM SEP 3
IP-101	AL	WB	580	Sec 4	p1	R020.1	WB 580 Prior to	BAY BRDG	THRU	CLOSURE	THRU	BAY BRDG	TO
							Route 680 I/C	CLOSURE	SEP - 8	SEP 3-8	TUE 5 AM	CLOSED	5AM SEP 8
								I-80	SEP - 3	BAY BRDG	THUR 8 PM	I-80	8PM SEP 3
IP-102	AL	SB	880	Sec 4	p10	6.4	SB Route 880 prior to	BAY BRDG	THRU	CLOSURE	THRU	BAY BRDG	TO
							Route 92 I/C	CLOSURE	SEP - 8	SEP 3-8	TUE 5 AM	CLOSED	5AM SEP 8
								I-80	SEP - 3	BAY BRDG	THUR 8 PM	I-80	8PM SEP 3
IP-103	AL	NB	880	Sec 3	p 9	0.1	NB Route 880 Prior to	BAY BRDG	THRU	CLOSURE	THRU	BAY BRDG	TO
							Route 237	CLOSURE	SEP - 8	SEP 3-8	TUE 5 AM	CLOSED	5AM SEP 8
								I-80	SEP - 3	BAY BRDG	THUR 8 PM	I-80	8PM SEP 3
IP-104	AL	WB	80	Sec 2	p 6	0.1	WB Route 80 At	BAY BRDG	THRU	CLOSURE	THRU	BAY BRDG	TO
							Powell St	CLOSURE	SEP - 8	SEP 3-8	TUE 5 AM	CLOSED	5AM SEP 8
								I-80	SEP - 3	BAY BRDG	THUR 8 PM	I-80	8PM SEP 3
IP-105	AL	WB	80	Sec 2	p 6	0.1	WB Route 80 At	BAY BRDG	THRU	CLOSURE	THRU	BAY BRDG	TO
							Powell St ON-RAMP	CLOSURE	SEP - 8	SEP 3-8	TUE 5 AM	CLOSED	5AM SEP 8
								I-80	SEP - 3	BAY BRDG	THUR 8 PM	I-80	8PM SEP 3
IP-106	AL	WB	580	Sec 2	p 6		WB Route 580 before 24/980	BAY BRDG	THRU	CLOSURE	THRU	BAY BRDG	TO
							Off Ramp (to South 880)	CLOSURE	SEP - 8	SEP 3-8	TUE 5 AM	CLOSED	5AM SEP 8
								I-80	SEP - 3	BAY BRDG	THUR 8 PM	I-80	8PM SEP 3
IP-107	AL	WB	24/980	Sec 2	p 6		At 12th Street,	BAY BRDG	THRU	CLOSURE	THRU	BAY BRDG	TO
							WB before HWY 24/980	CLOSURE	SEP - 8	SEP 3-8	TUE 5 AM	CLOSED	5AM SEP 8
								I-80	SEP - 3	BAY BRDG	THUR 8 PM	I-80	8PM SEP 3
IP-108	AL	WB		Sec 2	p 6		Webster Street	BAY BRDG	THRU	CLOSURE	THRU	BAY BRDG	TO
							Posey Tube in Alameda	CLOSURE	SEP - 8	SEP 3-8	TUE 5 AM	CLOSED	5AM SEP 8
								I-80	SEP - 3	BAY BRDG	THUR 8 PM	I-80	8PM SEP 3
IP-109	AL	WB	880	Sec 2	p 6		On High Street WB at HWY 880	BAY BRDG	THRU	CLOSURE	THRU	BAY BRDG	TO
								CLOSURE	SEP - 8	SEP 3-8	TUE 5 AM	CLOSED	5AM SEP 8
								I-80	SEP - 3	BAY BRDG	THUR 8 PM	I-80	8PM SEP 3
IP-110	AL	WB		Sec 4	p10		At Airport Drive EB from	BAY BRDG	THRU	CLOSURE	THRU	BAY BRDG	TO
							Oakland International Airport	CLOSURE	SEP - 8	SEP 3-8	TUE 5 AM	CLOSED	5AM SEP 8

CONTRACT NO. 04-0120R4

CONTRACT CHANGE ORDER NO 186

SHEET 10 OF 12

REGISTERED PROFESSIONAL ENGINEER
DOUGLAS A. JOHNSON
No. C 52971
Exp. 12-31-10
CIVIL
STATE OF CALIFORNIA

LABOR DAY WEEKEND BAY BRIDGE CLOSURE @ YBI

Contract # 04 0120R4
7/15/2009

SFOBB SSD PROJECT (WB)								LABOR DAY WEEKEND IP ADDRESSABLE PCMS'S					
No	County	Fwy	Rte	Sec. # refer to PCMS key	page #	PM	PCMS Location	15-Aug-09 (Turn on Signs before Noon)		28-Aug-09 (Turn on Signs after 5 AM)		THRS SEP 3 @8:00 PM THRU TUE SEPT 8(5:00AM) Turn on Signs.	
								First Panel	Second panel	First Panel	Second panel	First Panel	Second Panel
IP-111	MRN	SB	101	Sec 1	p 3	10.2	N of 101/580 JCT	I-80 BAY BRDG CLOSURE	SEP - 3 THRU SEP - 8	BAY BRDG CLOSURE SEP 3-8	THUR 8 PM THRU TUE 5 AM	I-80 BAY BRDG CLOSED	8PM SEP3 TO 5AM SEP 8
IP-112	MRN	SB	101	Sec 1	p 3	5.4	S of Tiburon Blvd/ E Blitherdate Ave	I-80 BAY BRDG CLOSURE	SEP - 3 THRU SEP - 8	BAY BRDG CLOSURE SEP 3-8	THUR 8 PM THRU TUE 5 AM	I-80 BAY BRDG CLOSED	8PM SEP 3 TO 5AM SEP 8
IP-113	ALA						OAKLAND Airport	I-80 BAY BRDG CLOSURE	SEP - 3 THRU SEP - 8	BAY BRDG CLOSURE SEP 3-8	THUR 8 PM THRU TUE 5 AM	I-80 BAY BRDG CLOSED	8PM SEP 3 TO 5AM SEP 8
IP-114	MRN	SB	101			3.1	North of Sausalito Lateral Rd	I-80 BAY BRDG CLOSURE	SEP - 3 THRU SEP - 8	BAY BRDG CLOSURE SEP 3-8	THUR 8 PM THRU TUE 5 AM	I-80 BAY BRDG CLOSED	8PM SEP 3 TO 5AM SEP 8
IP-115	SM	NB	1	Sec 1	p 4	47.3	N of Clarinada Ave	I-80 BAY BRDG CLOSURE	SEP - 3 THRU SEP - 8	BAY BRDG CLOSURE SEP 3-8	THUR 8 PM THRU TUE 5 AM	I-80 BAY BRDG CLOSED	8PM SEP 3 TO 5AM SEP 8
IP-116	SM	NB	280	Sec 1	p 4	25.2	N of Serramonte Blvd	I-80 BAY BRDG CLOSURE	SEP - 3 THRU SEP - 8	BAY BRDG CLOSURE SEP 3-8	THUR 8 PM THRU TUE 5 AM	I-80 BAY BRDG CLOSED	8PM SEP 3 TO 5AM SEP 8
IP-117	SM	EB	380	Sec 1	p 4	5	W of 380/92 JCT	I-80 BAY BRDG CLOSURE	SEP - 3 THRU SEP - 8	BAY BRDG CLOSURE SEP 3-8	THUR 8 PM THRU TUE 5 AM	I-80 BAY BRDG CLOSED	8PM SEP 3 TO 5AM SEP 8
IP-118	SM	EB	92	Sec 3	p 7	7.2	W of 92/280 JCT	I-80 BAY BRDG CLOSURE	SEP - 3 THRU SEP - 8	BAY BRDG CLOSURE SEP 3-8	THUR 8 PM THRU TUE 5 AM	I-80 BAY BRDG CLOSED	8PM SEP 3 TO 5AM SEP 8
IP-119	SM	NB	280	Sec 3	p 7	10.3	S of 280/92 JCT	I-80 BAY BRDG CLOSURE	SEP - 3 THRU SEP - 8	BAY BRDG CLOSURE SEP 3-8	THUR 8 PM THRU TUE 5 AM	I-80 BAY BRDG CLOSED	8PM SEP 3 TO 5AM SEP 8
IP-120	SM			Sec 4	p 12		SAN FRANCISCO AIRPORT	I-80 BAY BRDG CLOSURE	SEP - 3 THRU SEP - 8	BAY BRDG CLOSURE SEP 3-8	THUR 8 PM THRU TUE 5 AM	I-80 BAY BRDG CLOSED	8PM SEP 3 TO 5AM SEP 8
IP-121	SF	WB	80	Sec 1	p 4		WB 80 ONRAMP EASTSIDE OF YBI	I-80 BAY BRDG CLOSURE	SEP - 3 THRU SEP - 8	BAY BRDG CLOSURE SEP 3-8	THUR 8 PM THRU TUE 5 AM	I-80 BAY BRDG CLOSED	8PM SEP 3 TO 5AM SEP 8
IP-122	SF	WB	80	Sec 1	p 4		WB 80 ONRAMP WESTSIDE OF YBI	I-80 BAY BRDG CLOSURE	SEP - 3 THRU SEP - 8	BAY BRDG CLOSURE SEP 3-8	THUR 8 PM THRU TUE 5 AM	I-80 BAY BRDG CLOSED	8PM SEP 3 TO 5AM SEP 8
IP-123	SAC	WB	80				SACRAMENTO AIRPORT (location TBD)	I-80 BAY BRDG CLOSURE	SEP - 3 THRU SEP - 8	BAY BRDG CLOSURE SEP 3-8	THUR 8 PM THRU TUE 5 AM	I-80 BAY BRDG CLOSED	8PM SEP 3 TO 5AM SEP 8
IP-124	SJ	NB	101	Sec 1	p 4		SAN JOSE AIRPORT (Location TBD)	I-80 BAY BRDG CLOSURE	SEP - 3 THRU SEP - 8	BAY BRDG CLOSURE SEP 3-8	THUR 8 PM THRU TUE 5 AM	I-80 BAY BRDG CLOSED	8PM SEP 3 TO 5AM SEP 8
IP-125	SF	SB	280	Sec 1	p 4		280S/101S Gore Split	I-80 BAY BRDG CLOSURE	SEP - 3 THRU SEP - 8	BAY BRDG CLOSURE SEP 3-8	THUR 8 PM THRU TUE 5 AM	I-80 BAY BRDG CLOSED	8PM SEP 3 TO 5AM SEP 8
IP-126	SF	NB	280	Sec 1	p 4		NB 280 before Geneva Ave	I-80 BAY BRDG CLOSURE	SEP - 3 THRU SEP - 8	BAY BRDG CLOSURE SEP 3-8	THUR 8 PM THRU TUE 5 AM	I-80 BAY BRDG CLOSED	8PM SEP 3 TO 5AM SEP 8
IP-127	SF	NB	280	Sec 1	p 4		NB 280 before 101 split	I-80 BAY BRDG CLOSURE	SEP - 3 THRU SEP - 8	BAY BRDG CLOSURE SEP 3-8	THUR 8 PM THRU TUE 5 AM	I-80 BAY BRDG CLOSED	8PM SEP 3 TO 5AM SEP 8
IP-128	SF	NB	280	Sec 1	p 4		Northbound 280 Before Mariposa	I-80 BAY BRDG CLOSURE	SEP - 3 THRU SEP - 8	BAY BRDG CLOSURE SEP 3-8	THUR 8 PM THRU TUE 5 AM	I-80 BAY BRDG CLOSED	8PM SEP 3 TO 5AM SEP 8
IP-129	SF	NB	Mission St.	Sec 1	p 4		NB Mission St before Cesar Chavez St	I-80 BAY BRDG CLOSURE	SEP - 3 THRU SEP - 8	BAY BRDG CLOSURE SEP 3-8	THUR 8 PM THRU TUE 5 AM	I-80 BAY BRDG CLOSED	8PM SEP 3 TO 5AM SEP 8
IP-130	SF	NB	Bayshore	Sec 1	p 4		NB Bayshore Blvd After Geneva Ave	I-80 BAY BRDG CLOSURE	SEP - 3 THRU SEP - 8	BAY BRDG CLOSURE SEP 3-8	THUR 8 PM THRU TUE 5 AM	I-80 BAY BRDG CLOSED	8PM SEP 3 TO 5AM SEP 8
IP-131	Alameda	WB	92	Sec 4	p 10		880 south at 92 W Connector facing connector traffic	I-80 BAY BRDG CLOSURE	SEP - 3 THRU SEP - 8	BAY BRDG CLOSURE SEP 3-8	THUR 8 PM THRU TUE 5 AM	I-80 BAY BRDG CLOSED	8PM SEP 3 TO 5AM SEP 8
IP-132	Alameda	WB	92	Sec 4	p 10		92 W before North Connector facing 92 W traffic	I-80 BAY BRDG CLOSURE	SEP - 3 THRU SEP - 8	BAY BRDG CLOSURE SEP 3-8	THUR 8 PM THRU TUE 5 AM	I-80 BAY BRDG CLOSED	8PM SEP 3 TO 5AM SEP 8
IP-133	Alameda	WB	92	Sec 4	p 10		92 W After 880S/92W connector facing 92 W traffic	I-80 BAY BRDG CLOSURE	SEP - 3 THRU SEP - 8	BAY BRDG CLOSURE SEP 3-8	THUR 8 PM THRU TUE 5 AM	I-80 BAY BRDG CLOSED	8PM SEP 3 TO 5AM SEP 8
IP-134	SM	SB	101	Sec 3	p 7		A Mile Prior to 92	I-80 BAY BRDG CLOSURE	SEP - 3 THRU SEP - 8	BAY BRDG CLOSURE SEP 3-8	THUR 8 PM THRU TUE 5 AM	I-80 BAY BRDG CLOSED	8PM SEP 3 TO 5AM SEP 8
IP-135	ALA	SB	880	Sec 4	p 10		Half a Mile Prior to 92	I-80 BAY BRDG CLOSURE	SEP - 3 THRU SEP - 8	BAY BRDG CLOSURE SEP 3-8	THUR 8 PM THRU TUE 5 AM	I-80 BAY BRDG CLOSED	8PM SEP 3 TO 5AM SEP 8
IP-136	SM	NB	101	Sec 3	p 8		Half a Mile Prior to 84	I-80 BAY BRDG CLOSURE	SEP - 3 THRU SEP - 8	BAY BRDG CLOSURE SEP 3-8	THUR 8 PM THRU TUE 5 AM	I-80 BAY BRDG CLOSED	8PM SEP 3 TO 5AM SEP 8
IP-137	ALA	WB	580	Sec 4	p 10		A Half a Mile Prior to 238/580	I-80 BAY BRDG CLOSURE	SEP - 3 THRU SEP - 8	BAY BRDG CLOSURE SEP 3-8	THUR 8 PM THRU TUE 5 AM	I-80 BAY BRDG CLOSED	8PM SEP 3 TO 5AM SEP 8
IP-138	CC	WB	80	Sec 2	p 6		Between Richmond Pkwy and Cutting Blvd	I-80 BAY BRDG CLOSURE	SEP - 3 THRU SEP - 8	BAY BRDG CLOSURE SEP 3-8	THUR 8 PM THRU TUE 5 AM	I-80 BAY BRDG CLOSED	8PM SEP 3 TO 5AM SEP 8
IP-139	Mrn	SB	101	Sec 1	p 3		One Mile Before Anderson Exit	ANDERSON EXIT CLOSED	USE 580	BAY BRDG CLOSED SEP 3-8	THUR 8 PM THRU TUE 5 AM	I-80 BAY BRDG CLOSED	8PM SEP3 TO 5AM SEP8
IP-140	Mrn	WB	580	Sec 1	p 3		Quarter Mile Before San Quentin	SB 101 USE	SIR FRAN DRAKE BLVD	BAY BRDG CLOSED SEP 3-8	THUR 8 PM THRU TUE 5 AM	I-80 BAY BRDG CLOSED	8PM SEP3 TO 5AM SEP8
IP-141	Mrn	WB	580	Sec 1	p 3		One Mile Before Sir Framnces Drake Blvd	NO 101 ACCESS	NEXT EXIT	BAY BRDG CLOSED SEP 3-8	THUR 8 PM THRU TUE 5 AM	I-80 BAY BRDG CLOSED	8PM SEP3 TO 5AM SEP8
IP- 142	Mrn	NB	101	Sec 1	p3		Half Mile Before Sir Framnces Drake Blvd	I-80 BAY BRDG CLOSURE	SEP - 3 THRU SEP - 8	BAY BRDG CLOSED SEP 3-8	THUR 8 PM THRU TUE 5 AM	Ferry Terminal Next Exit	UNTIL TUESDAY 5:00 AM
IP-143	Mrn	SB	101	Sec 1	p3		Half Mile Before Sir Frances Drake	I-80 BAY BRDG CLOSURE	SEP - 3 THRU SEP - 8	BAY BRDG CLOSED SEP 3-8	THUR 8 PM THRU TUE 5 AM	Ferry Terminal Next Exit	UNTIL TUESDAY 5:00 AM
IP-144	SM	SFO		Sec 3	p 7		International Terminal Outbound Ramp Upper Level	I-80 BAY BRDG CLOSURE	3-Sep THRU 8-Sep	BAY BRDG CLOSED SEP 3-8	THUR 8 PM THRU TUE 5 AM	I-80 BAY BRDG CLOSED	8PM SEP3 TO 5AM SEP8

REGISTERED PROFESSIONAL ENGINEER
DOUGLAS A. JOHNSON
No. C 52971
Exp. 12-31-10
CIVIL
STATE OF CALIFORNIA

CONTRACT NO. 04-0120R4

CONTRACT CHANGE ORDER NO 186

SHEET 11 OF 12

LABOR DAY WEEKEND BAY BRIDGE CLOSURE @ YBI

SFOBB SSD PROJECT (WB)								LABOR DAY WEEKEND IP ADDRESSABLE PCMS'S					
No	County	Fwy	Rte	Sec. #	page #	PM	PCMS Location	15-Aug-09 (Turn on Signs before Noon)		28-Aug-09 (Turn on Signs after 5 AM)		THRS SEP 3 @8:00 PM THRU TUE SEPT 8(5:00AM) Turn on Signs.	
				refer to PCMS key				First Panel	Second panel	First Panel	Second panel	First Panel	Second Panel
IP-145	SM	SFO		Sec 3	p 7		Domestic Terminal Outbound Ramp Lower Level	I-80 BAY BRDG CLOSURE	3-Sep THRU 8-Sep	BAY BRDG CLOSED SEP 3-8	THUR 8 PM THRU TUE 5 AM	I-80 BAY BRDG CLOSED	8PM SEP3 TO 5AM SEP8
IP-146	SM	SFO		Sec 3	p 7		Rental Car Facility on North McDonnell Rd Facing Exiting Traffic	I-80 BAY BRDG CLOSURE	3-Sep THRU 8-Sep	BAY BRDG CLOSED SEP 3-8	THUR 8 PM THRU TUE 5 AM	I-80 BAY BRDG CLOSED	8PM SEP3 TO 5AM SEP8
1P-147	SM	SFO		Sec 3	p 7		Long Term Parking Garage EXIT Facing Exiting Traffic	I-80 BAY BRDG CLOSURE	3-Sep THRU 8-Sep	BAY BRDG CLOSED SEP 3-8	THUR 8 PM THRU TUE 5 AM	I-80 BAY BRDG CLOSED	8PM SEP3 TO 5AM SEP8
IP-148	SM	SFO		Sec 3	p 7		Long Term Parking Surface Lot Exit Facing Exiting Traffic	I-80 BAY BRDG CLOSURE	3-Sep THRU 8-Sep	BAY BRDG CLOSED SEP 3-8	THUR 8 PM THRU TUE 5 AM	I-80 BAY BRDG CLOSED	8PM SEP3 TO 5AM SEP8
IP-149	To replace CMS 054 until it is repaired						Place at or near the original CMS location	I-80 BAY BRDG CLOSURE	3-Sep THRU 8-Sep	BAY BRDG CLOSED SEP 3-8	THUR 8 PM THRU TUE 5 AM	I-80 BAY BRDG CLOSED	8PM SEP3 TO 5AM SEP8
IP-150	To replace CMS 116 until it is repaired						Place at or near the original CMS location	I-80 BAY BRDG CLOSURE	3-Sep THRU 8-Sep	BAY BRDG CLOSED SEP 3-8	THUR 8 PM THRU TUE 5 AM	I-80 BAY BRDG CLOSED	8PM SEP3 TO 5AM SEP8
IP-151	To replace CMS 220 until it is repaired						Place at or near the original CMS location	I-80 BAY BRDG CLOSURE	3-Sep THRU 8-Sep	BAY BRDG CLOSED SEP 3-8	THUR 8 PM THRU TUE 5 AM	I-80 BAY BRDG CLOSED	8PM SEP3 TO 5AM SEP8
IP- 152	To replace CMS 057 until it is repaired						Place at or near the original CMS location	I-80 BAY BRDG CLOSURE	3-Sep THRU 8-Sep	BAY BRDG CLOSED SEP 3-8	THUR 8 PM THRU TUE 5 AM	I-80 BAY BRDG CLOSED	8PM SEP3 TO 5AM SEP8
IP-153	To replace CMS 086 until it is repaired						Place at or near the original CMS location	I-80 BAY BRDG CLOSURE	3-Sep THRU 8-Sep	BAY BRDG CLOSED SEP 3-8	THUR 8 PM THRU TUE 5 AM	I-80 BAY BRDG CLOSED	8PM SEP3 TO 5AM SEP8
IP-154	To replace CMS 087 until it is repaired						Place at or near the original CMS location	I-80 BAY BRDG CLOSURE	3-Sep THRU 8-Sep	BAY BRDG CLOSED SEP 3-8	THUR 8 PM THRU TUE 5 AM	I-80 BAY BRDG CLOSED	8PM SEP3 TO 5AM SEP8
IP-155	To replace CMS 217 until it is repaired						Place at or near the original CMS location	I-80 BAY BRDG CLOSURE	3-Sep THRU 8-Sep	BAY BRDG CLOSED SEP 3-8	THUR 8 PM THRU TUE 5 AM	I-80 BAY BRDG CLOSED	8PM SEP3 TO 5AM SEP8
IP-156	To replace CMS 044 until it is repaired						Place at or near the original CMS location	I-80 BAY BRDG CLOSURE	3-Sep THRU 8-Sep	BAY BRDG CLOSED SEP 3-8	THUR 8 PM THRU TUE 5 AM	I-80 BAY BRDG CLOSED	8PM SEP3 TO 5AM SEP8

Note: * turn on Three weeks in advance**

CONTRACT NO. 04-0120R4

CONTRACT CHANGE ORDER NO 186

SHEET 12 OF 12

CONTRACT CHANGE ORDER

Change Requested by: Engineer

CCO 187	Suppl. No. 0	Contract No. 04 - 0120R4	Road SF-80-12.6/13.2	FED. AID LOC.: ACBRIM-080-1(097)N

To: **CC MYERS INC**

You are directed to make the following changes from the plans and specifications or do the following described work not included in the plans and specifications for this contract. ***NOTE: This change order is not effective until approved by the Engineer.***

Description of work to be done, estimate of quantities and prices to be paid. (Segregate between additional work at contract price, agreed price and force account.) Unless otherwise stated, rates for rental of equipment cover only such time as equipment is actually used and no allowance will be made for idle time. This last percentage shown is the net accumulated increase or decrease from the original quantity in the Engineer's Estimate.

Extra Work at Force Account:

Fabricate and furnish temporary bracing for the East-Tie In as shown on Sheets 2 and 3 of this change. Costs incurred to field-drill bolt holes will be compensated for on this change order.

Payment for this work shall be made in accordance with Sections 4-1.03D, Extra Work, and 9-1.03, Force Account Payment, of the Standard Specifications.

Estimated Cost of Extra Work at Force Account $150,000.00

RECEIVED
SEP 28 2009
01105

Estimated Cost: Increase ☑ Decrease ☐ **$150,000.00**

By reason of this order the time of completion will be adjusted as follows: Deferred

Submitted by		
Signature	**Resident Engineer** BILL CASEY	**Date** 6-30-09
Approval Recommended by		
Signature Deanna Vilcheck	**Area Construction Manager** DEANNA VILCHECK	**Date** 6/30/09
Engineer Approval by		
Signature Deanna Vilcheck	**Area Construction Manager** DEANNA VILCHECK	**Date** 7/15/09

We the undersigned contractor, have given careful consideration to the change proposed and agree, if this proposal is approved, that we will provide all equipment, furnish the materials, except as may otherwise be noted above, and perform all services necessary for the work above specified, and will accept as full payment therefor the prices shown above.

NOTE: If you, the contractor, do not sign acceptance of this order, your attention is directed to the requirements of the specifications as to proceeding with the ordered work and filing a written protest within the time therein specified.

Contractor Acceptance by		
Signature	**(Print name and title)** STEVE FRANCIS, CHIEF ESTIMATOR	**Date** 7.8.09

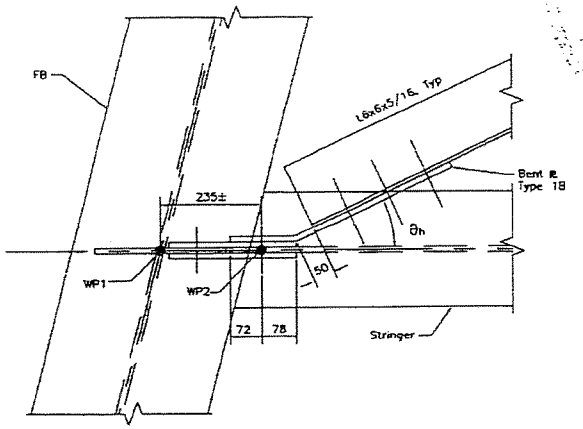

PLAN

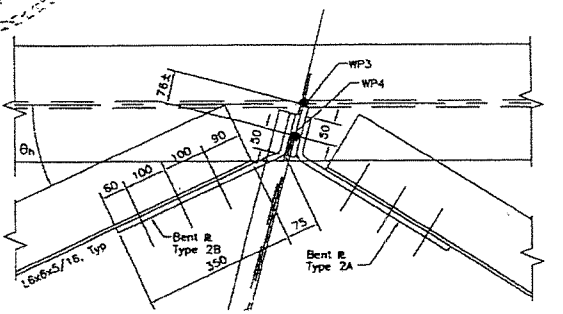

PLAN

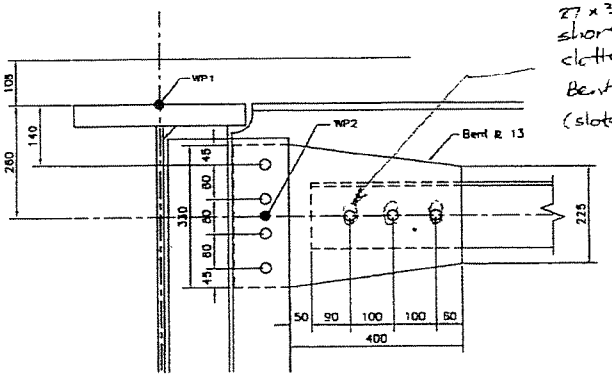

ELEVATION

Bent L Type 1B shown
Bent L Type 1A similar

TYPE 1

27 x 32 (1 1/16" x 1 5/16") short slotted holes in Bent R only (slots aligned vertically)

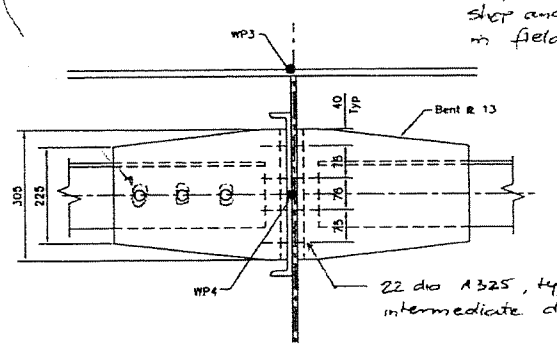

ELEVATION

TYPE 2

Notes

1. All bolts are 25 mm (1") diameter A490 U.N.C.
2. Drill holes in angles only on one side in shop and other side in field.

TEMPORARY BRACING
SKETCH 1

CONTRACT NO. 04-012024

CONTRACT CHANGE ORDER NO 187

SHEET 2 OF 3

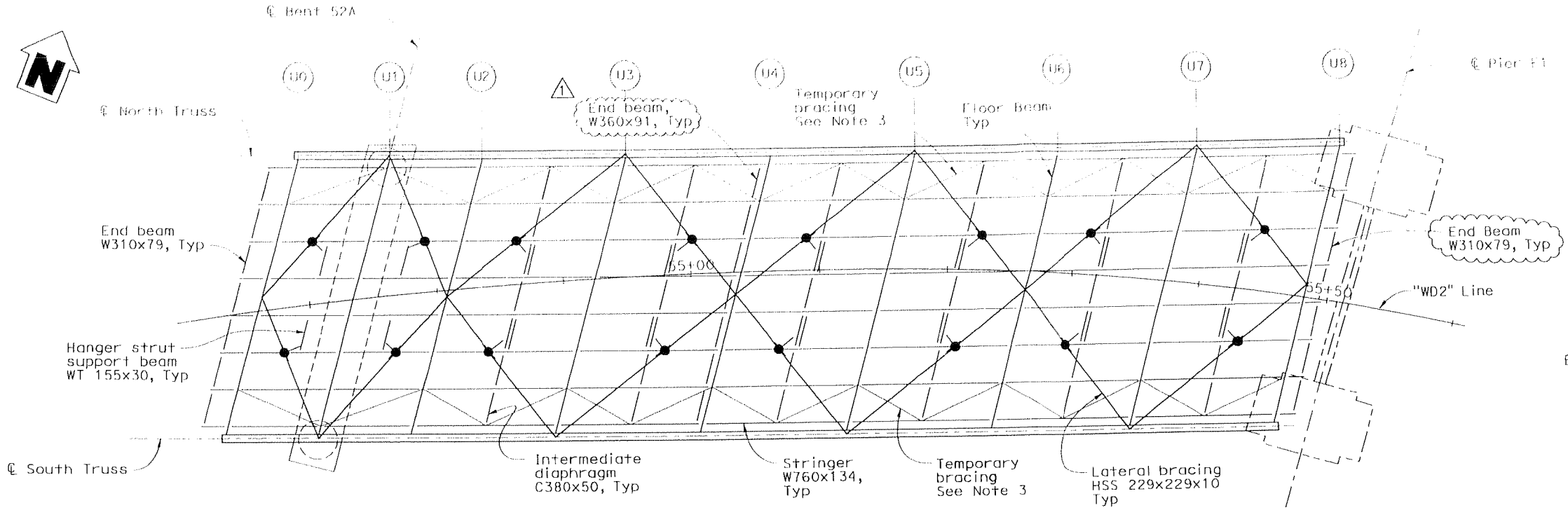

UPPER DECK PLAN

1:200

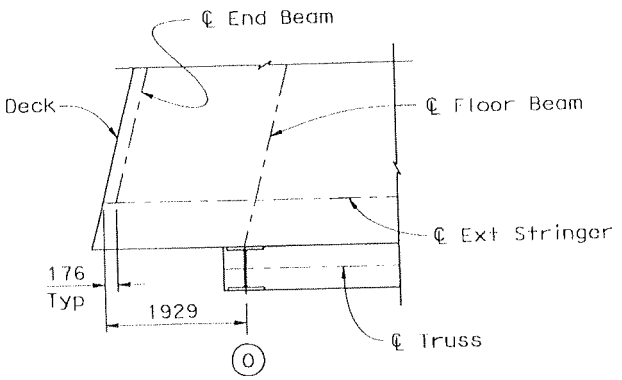

Note: West end of South Truss shown, other locations similar.

DETAIL 2

1:50

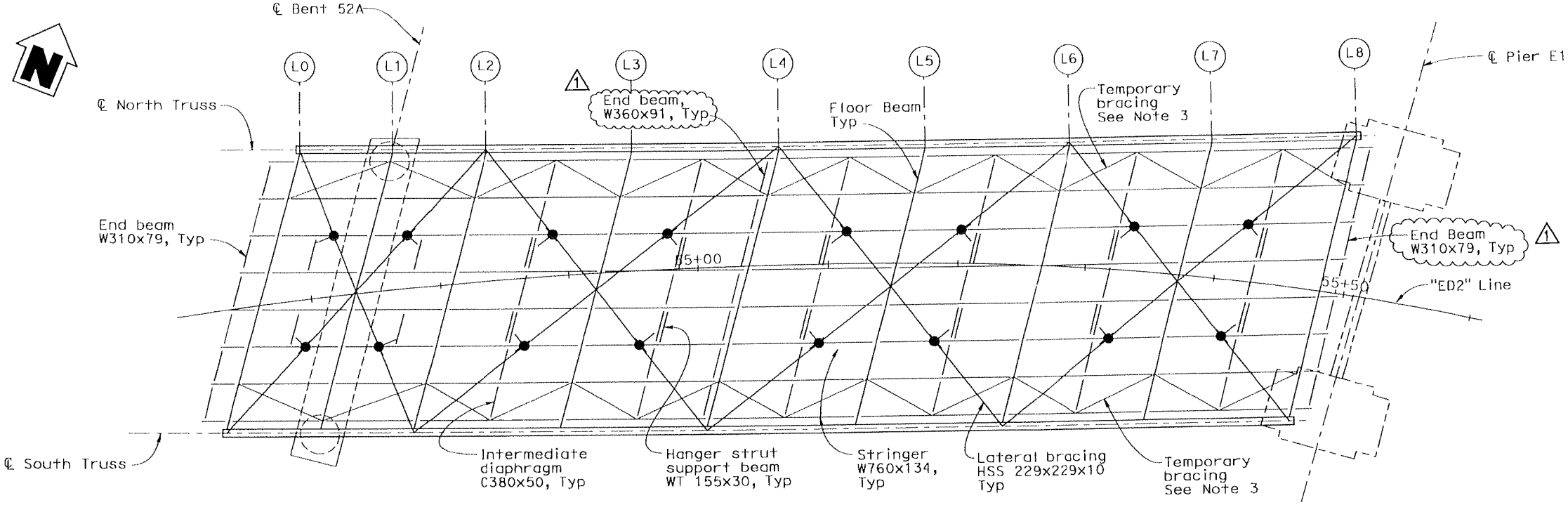

LOWER DECK PLAN

1:200

MARK	DATE	DESCRIPTIONS	BY	CH'D	CCO#
		REVISIONS			
1	9/30/08	ELIMINATE DECK OVERLAY	MC	SA	

CONTRACT CHANGE ORDER NO. 187
SHEET 2 OF 3

LEGEND:

- (X) Indicates floor beam number (Upper & Lower Deck)
- ----- Indicates Existing Structure
- Indicates Hanger Strut Location

Notes:

1. For floor beam type and details, see "Typical Section" sheet and "Floor Beam Details" sheets.
2. For lateral bracing hanger strut details, see "Lateral Bracing Details No. 8" sheet.
3. Contractor shall provide temporary bracing during concrete deck casting. Minimum one pair each between all floor beams in the north and south Stringer bays.

DIST	COUNTY	ROUTE	KILOMETER POST TOTAL PROJECT	SHEET NO	TOTAL
04	SF	80	12.6/13.2		

Caltrans Metric

Sajid Abbas
REGISTERED CIVIL ENGINEER

4-7-08
PLANS APPROVAL DATE

REGISTERED PROFESSIONAL ENGINEER — Sajid Abbas — No. C 055274 — Exp. 12/31/09 — CIVIL — STATE OF CALIFORNIA

The State of California or its officers or agents shall not be responsible for the accuracy or completeness of electronic copies of this plan sheet.

T.Y.LIN / MOFFATT & NICHOL
Two Harrison Street, Suite 500
San Francisco, CA 94105

ALL DIMENSIONS ARE IN MILLIMETERS UNLESS OTHERWISE SHOWN

SAN FRANCISCO OAKLAND BAY BRIDGE
EAST SPAN SEISMIC SAFETY PROJECT

EAST TIE-IN

FRAMING PLAN NO. 2

	BY	CHECKED
DESIGN	S. Abbas, M. Sah, C. Redfield	S. Cheng, H. Najm
DETAILS	A. Sudhausen, S. Lee	W. Irwin, A. Lee
QUANTITIES	H. Nelson	A. Lee

PREPARED FOR THE STATE OF CALIFORNIA DEPARTMENT OF TRANSPORTATION

T. Ostrom/M. Whiteside/A. Akinsanya
DESIGN OVERSIGHT

SIGN OFF DATE

M. Sah
PROJECT ENGINEER
S. Abbas
PROJECT MANAGER

CU
EA 0120R4

BRIDGE NO. 34-0006 (TEMP)
KILOMETER POST 12.6

DISREGARD PRINTS BEARING EARLIER REVISION DATES → 11/8/07 | 4/3/08 | 9/30/08

SHEET 28R1 OF 214

DESIGN DETAIL SHEET (METRIC) (REV. 3/1/98)
◆DATE◆ ◆TIME◆ Pen Table File

ORIGINAL SCALE IN MILLIMETERS FOR REDUCED PLANS 0 10 20 30 40 50 60 70 80 90 100

FILE => p:\bb\04-012001\eti\revision 1a\offrp02.dgn

FILE => p:\bb\04-012001\eti\revision 1a\offrp02.dgn
TIME PLOTTED => 11:15:47 AM
DATE PLOTTED => 10/7/2008
USERNAME => dzhao
100% P, S & E

STATE OF CALIFORNIA - DEPARTMENT OF TRANSPORTATION

CONTRACT CHANGE ORDER MEMORANDUM

TO: MIKE FORNER / DEANNA VILCHECK	FILE: E.A. 04 - 0120R4
	CO-RTE-PM SF-80-12.6/13.2
FROM: BILL CASEY	FED. NO. ACBRIM-080-1(097)N
CCO#: **187** SUPPLEMENT#: **0** Category Code: **CHPA**	CONTINGENCY BALANCE (incl. this change) **$35,158,157.59**
COST: **$150,000.00** INCREASE ☑ DECREASE ☐	HEADQUARTERS APPROVAL REQUIRED? ☐ YES ☑ NO
SUPPLEMENTAL FUNDS PROVIDED: **$0.00**	IS THIS REQUEST IN ACCORDANCE WITH ENVIRONMENTAL DOCUMENTS? ☑ YES ☐ NO
CCO DESCRIPTION: Fab & Erect Temp Bracing for Deck Pours	**PROJECT DESCRIPTION:** CONSTRUCT ROUTE 80 TEMP BYPASS STRUCTURE

Original Contract Time:	Time Adj. This Change:	Previously Approved CCO Time Adjustments:	Percentage Time Adjusted: (including this change)	Total # of Unreconciled Deferred Time CCO(s): (including this change)
475 Day(s)	**DEF** Day(s)	**1195** Day(s)	**252** %	**8**

THIS CHANGE ORDER PROVIDES FOR:

compensating the Contractor for all costs associated with furnishing and fabricating temporary steel bracing for the East-Tie In.

This project, the Yerba Buena Island Detour (YBID), was awarded in March 2004 to construct a detour that will allow for the tie in of the new east span of the San Francisco Oakland Bay Bridge to Yerba Buena Island. The YBID encompasses three main structures, the East Tie-In to the existing bridge, the West Tie-In (WTI) to Yerba Buena Island, and the Viaduct structure between the two tie ins.

A December 14, 2006 Department strategy memorandum, approved by Tony Anziano, Toll Bridge Program Manager, and Richard Land, Chief Engineer, recommended that the Department assume the design responsibility for the East Tie-In (ETI) structure. Based on this memorandum, the design of the structure was changed from a design that incorporated the existing steel truss bridge with the new structure to a design that replaces the existing structure with a new structure (roll out / roll in).

Numerous furnish and fabrication costs associated with the ETI steel truss had been excluded from Contract Change Order Nos. 129 and 140, including the furnishing and fabrication of temporary bracing, because the design of these bracings were not made available until after CCO 129 and CCO 140 needed to be executed. The bracing is required during concrete placement to provide lateral stability to the truss stringers. Erection of the bracing shall be paid for under CCO No. 129 except for field adjustments, such as magnetic drilling of bolt hole connections, which shall be paid for under this change order.

Compensation for this change shall be performed asExtra Work at Force Account for a total cost of $150,000.00, which can be financed through the contingency fund. A cost analysis is on file.

Adjustment of contract time is deferred pending completion of the work specified in this change as it may become the controlling operation in accordance with Section 8-1.07 "Liquidated Damages", of the Standard Specifications and Section 10-1.20 "Time Related Overhead (TRO)" of the Special Provisions.

Compensation for delays resulting from this work will be made in accordance with Section 8-1.09 "Right of Way Delays" of the Standard Specifications and Section 10-1.20 "Time Related Overhead" of the Special Provisions.

This change was requested by Mike Whiteside - YBI Coordination Engineer, per Memorandum dated April 8, 2008 and concurred with by Alec Melkonians - Asst. Project Manager, Hong Wong - Project Engineer, and Lina Ellis - Structure Maintenance.

Maintenance concurrence is not required, as this work does not affect any permanent roadway features.

ADA Notice: For individuals with sensory disabilities, this document is available in alternate formats. For information call: (916) 654-6410 or TDD (916) 654-3880 or write Records and Forms Management, 1120 N Street, MS-89, Sacramento, CA 95814.

CONCURRED BY:			
Construction Engineer:	Bill Casey, Resident Engineer	Date	6-30-09
Bridge Engineer:	Mike Whiteside, Toll Bridge Design	Date	4/8/08
Project Engineer:	Hong Wong, PE	Date	5/12/09
Project Manager:	Alec Melkonians	Date	5/12/09
FHWA Rep.:		Date	
Environmental:		Date	
Other (specify):	Lina Ellis, Maintenance	Date	7/1/09
Other (specify):		Date	
District Prior Approval By:		Date	
HQ (Issue Approve) By:		Date	
Resident Engineer's Signature:		Date	6-30-09

ESTIMATE OF COST

	THIS REQUEST	TOTAL TO DATE
ITEMS	$0.00	$0.00
FORCE ACCOUNT	$150,000.00	$150,000.00
AGREED PRICE	$0.00	$0.00
ADJUSTMENT	$0.00	$0.00
TOTAL	$150,000.00	$150,000.00

FEDERAL PARTICIPATION

☐ PARTICIPATING ☐ PARTICIPATING IN PART ☑ NONE
☐ NON-PARTICIPATING (MAINTENANCE) ☐ NON-PARTICIPATING

FEDERAL SEGREGATION (if more than one Funding Source or P.I.P. type)
☐ CCO FUNDED PER CONTRACT ☐ CCO FUNDED AS FOLLOWS

FEDERAL FUNDING SOURCE	PERCENT

ADA Notice: For individuals with sensory disabilities, this document is available in alternate formats. For information call: (916) 654-6410 or TDD (916) 654-3880 or write Records and Forms Management, 1120 N Street, MS-89, Sacramento, CA 95814.

DEPARTMENT OF TRANSPORTATION – District 4 Toll Bridge Program
325 Burma Rd.
Oakland, CA 94607
Telephone (510) 622-4200 Fax (510) 622-4266

LETTER OF TRANSMITTAL

To: CC MYERS INC
3286 FITZGERALD ROAD
RANCHO CORDOVA CA 95741

Attn: Bob Coupe

Date: 26-Aug-2009

Contract No: 04-0120R4
04-SF-80-12.6-13.2

Job Name: South – South Detour

Transmittal No.: 05.03.02-001733

Subject : Approved Contract Change Order No. 188

Enclosed please find the following items:

[ ]	Shop Drawings	[X]	Change Order	[ ]	Submittal(s)
[ ]	WSWD Report(s)	[ ]	Plans	[ ]	Other
[ ]	Daily Extra Work Reports	[ ]	Progress Payment		
[ ]	RFI Responses	[ ]	Dept. Letter		

Item	Date	Copies	Sheets	Description
1	26-Aug-2009	1	2	Approved Contract Change Order No. 188

These Are Transmitted As Checked Below:

[ ]	For Approval or Action	[ ]	Approved as Submitted	[ ]	Resubmit ___	Copies for approval
[X]	For Your Use	[X]	Approved as Noted	[ ]	Submit ___	Copies for distribution
[ ]	As Requested	[ ]	Returned for Corrections	[ ]	Return ___	Corrected prints
[ ]	For Review & Comment	[ ]	Other	[ ]	Sign and Return	

Remarks:

Signed: 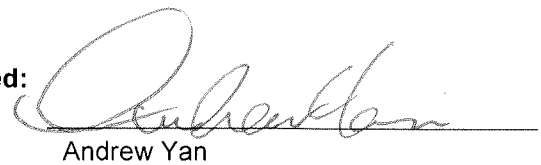
Andrew Yan

Copy To:
File: 05.03.02, 49.188.01

STATE OF CALIFORNIA - DEPARTMENT OF TRANSPORTATION

CONTRACT CHANGE ORDER

Change Requested by: Engineer

CCO 188	Suppl. No. 0	Contract No. 04 - 0120R4	Road SF-80-12.6/13.2	FED. AID LOC.: ACBRIM-080-1(097)N

To: **CC MYERS INC**

You are directed to make the following changes from the plans and specifications or do the following described work not included in the plans and specifications for this contract. ***NOTE: This change order is not effective until approved by the Engineer.***

Description of work to be done, estimate of quantities and prices to be paid. (Segregate between additional work at contract price, agreed price and force account.) Unless otherwise stated, rates for rental of equipment cover only such time as equipment is actually used and no allowance will be made for idle time. This last percentage shown is the net accumulated increase or decrease from the original quantity in the Engineer's Estimate.

Section 5-1.26 "Sound Control Requirements" of the Contract Special Provisions shall be superseded by the provisions as defined on Sheet No. 2 of this change order.

Any additional costs associated with providing for the sound control measurements specified under this change order or for cost impacts to the Contractor's operations resulting from the implementation of these provisions shall be compensated under a supplement to this change order.

Estimated Cost: **Increase** ☐ **Decrease** ☐ **$0.00**

By reason of this order the time of completion will be adjusted as follows: 0 days

Submitted by		
Signature	**Resident Engineer** BILL CASEY	**Date** 7-22-09
Approval Recommended by		
Signature Deanna Vilcheck	**Area Construction Manager** DEANNA VILCHECK	**Date** 7/28/09
Engineer Approval by		
Signature Deanna Vilcheck	**Area Construction Manager** DEANNA VILCHECK	**Date** 8/13/09

We the undersigned contractor, have given careful consideration to the change proposed and agree, if this proposal is approved, that we will provide all equipment, furnish the materials, except as may otherwise be noted above, and perform all services necessary for the work above specified, and will accept as full payment therefor the prices shown above.

NOTE: If you, the contractor, do not sign acceptance of this order, your attention is directed to the requirements of the specifications as to proceeding with the ordered work and filing a written protest within the time therein specified.

Contractor Acceptance by		
Signature	**(Print name and title)** STEVE FRANCIS, CHIEF ESTIMATOR	**Date** 8.3.09

5-1.26 SOUND CONTROL REQUIREMENTS

Sound control shall conform to these special provisions.

Attention is directed to "Supplemental Project Information," of these special provisions for reference to the USCG License DTCG-Z71111-03RP-002L, Amendment No. 1, Maintenance and Logistic Command Pacific.

The noise level from the Contractor's operations, between the hours of 7:00 p.m. and 7:00 a.m., shall not exceed 78 dBa at a distance of 15 m from the source. Impact-type mechanical operations, such as jack-hammering shall not be conducted between the hours of 7:00 p.m. and 7:00 a.m. Pile-driving shall not be conducted between the hours of 7:00 p.m. and 12:00 p.m. At all times, the Contractor shall be responsible for complying with local ordinances regulating noise levels as well as the sound requirements of this section.

Noise monitoring activities will be conducted by the Department. The Contractor shall coordinate with the Department monitors and allow them access to noise monitoring locations.

The Contractor shall provide one "Type 1" sound level meter and one acoustic calibrator, which will be used by the Department during the life of the contract, at least 30 days prior to the construction start. The Contractor shall provide training by a person trained in noise monitoring to one Department employee designated by the Engineer. The sound level meter shall be calibrated and certified by the manufacturer or other independent acoustical laboratory prior to delivery to the Department. The Contractor shall provide annual recalibration by the manufacturer or other independent acoustical laboratory. All equipment shall be capable of taking measurements using the A-weighting network and the "slow" response of the sound level meter. The measurement microphone shall be fitted with an appropriate windscreen. All equipment shall be returned to the Contractor at the acceptance of the contract. Equipment damaged by actions of the Department or the public shall be paid for as extra work as provided in Section 4-1.03D for the Standard Specifications.

Each internal combustion engine, used for any purpose on the job or related to the job, shall be equipped with a muffler of a type recommended by the manufacturer. No internal combustion engine shall be operated on the project without the muffler.

The noise level requirement shall apply to the equipment on the job or related to the job, including but not limited to trucks, transit mixers or transient equipment that may or may not be owned by the Contractor. The use of loud sound signals shall be avoided in favor of light warnings except those required by safety laws for the protection of personnel.

Full compensation for conforming to the requirements of this section shall be considered as included in the prices paid for the various contract items of work involved and no additional compensation will be allowed therefor.

STATE OF CALIFORNIA - DEPARTMENT OF TRANSPORTATION

CONTRACT CHANGE ORDER MEMORANDUM

DATE: 5/29/2009

TO: MIKE FORNER / DEANNA VILCHECK	FILE: E.A. 04 - 0120R4
	CO-RTE-PM SF-80-12.6/13.2
FROM: BILL CASEY	FED. NO. ACBRIM-080-1(097)N
CCO#: 188 SUPPLEMENT#: 0 Category Code: CXSA	CONTINGENCY BALANCE (incl. this change) $27,190,491.59
COST: $0.00 INCREASE ☐ DECREASE ☐	HEADQUARTERS APPROVAL REQUIRED? ☑ YES ☐ NO
SUPPLEMENTAL FUNDS PROVIDED: $0.00	IS THIS REQUEST IN ACCORDANCE WITH ENVIRONMENTAL DOCUMENTS? ☑ YES ☐ NO
CCO DESCRIPTION: Sound Control Requirment SSP Change	**PROJECT DESCRIPTION:** CONSTRUCT ROUTE 80 TEMP BYPASS STRUCTURE

Original Contract Time:	Time Adj. This Change:	Previously Approved CCO Time Adjustments:	Percentage Time Adjusted: (including this change)	Total # of Unreconciled Deferred Time CCO(s): (including this change)
475 Day(s)	0 Day(s)	1195 Day(s)	252 %	7

THIS CHANGE ORDER PROVIDES FOR:

replacing the current Section 5-1.26 Sound Control Requirements of the Special Provisions with a revised version.

This project, the Yerba Buena Island Detour (YBID), was awarded in March 2004 to construct a detour that will allow for the tie in of the new east span of the San Francisco Oakland Bay Bridge to Yerba Buena Island. The YBID encompasses three main structures, the East Tie-In to the existing bridge, the West Tie-In (WTI) to Yerba Buena Island, and the Viaduct structure between the two tie ins.

The Department issued a December 25, 2006 strategy memo which was approved by Tony Anziano (Toll Bridge Program Manager), Richard Land (Chief Engineer), and subsequently by the Toll Bridge Program Oversight Committee (TBPOC) that called for the advance construction of foundation work for the Yerba Buena Island Transition Structure (YBITS) under this contract by change order. This strategy has been implemented under this contract in order to advance the completion of the YBITS project and potentially allow for an early opening of the new San Francisco - Oakland Bay Bridge.

Due to excessive noise levels at the United States Coast Guard (USCG) facility associated with the contract's pile driving activities, it was necessary to revise the Special Provisions to limit the hours to which the Contractor may drive piles. Currently, the Special Provisions do not allow impact-type mechanical operations such as pile driving between the hours of 7:00 p.m and 7:00 a.m. The revised hours to which pile driving will not be allowed will be between the hours of 7:00 p.m. and 12:00 p.m.

This change order shall be processed at no costs to the Department. Any adjustment of compensation for the implementation of the provisions of this change order or for impacts to the Contractor's operations resulting from this change is deferred and shall be provided for under a supplemental change order once the extent of these costs has been determined.

No time adjustment is warranted for this change, as it does not affect the controlling operation.

This change was requested by Alec Melkonians - Asst. Project Manager per Memorandum dated March 31, 209 and concurred with by Hong Wong - Project Engineer.

Maintenance concurrence is not required as this change doesn't affect any permanent roadway features.

ADA Notice: For individuals with sensory disabilities, this document is available in alternate formats. For information call: (916) 654-6410 or TDD (916) 654-3880 or write Records and Forms Management, 1120 N Street, MS-89, Sacramento, CA 95814.

CONTRACT CHANGE ORDER MEMORANDUM

CONCURRED BY:			
Construction Engineer:	Bill Casey, Resident Engineer	Date	7-28-09
Bridge Engineer:		Date	
Project Engineer:	Hong Wong, PE	Date	6/15/09
Project Manager:	Alec Melkonians	Date	3/31/09
FHWA Rep.:		Date	
Environmental:		Date	
Other (specify):		Date	
Other (specify):		Date	
District Prior Approval By:		Date	
HQ (Issue Approve) By:	Bob Molera, HQ CCO Engineer	Date	6/23/09
Resident Engineer's Signature:		Date	7-28-09

ESTIMATE OF COST

	THIS REQUEST	TOTAL TO DATE
ITEMS	$0.00	$0.00
FORCE ACCOUNT	$0.00	$0.00
AGREED PRICE	$0.00	$0.00
ADJUSTMENT	$0.00	$0.00
TOTAL	$0.00	$0.00

FEDERAL PARTICIPATION

☐ PARTICIPATING ☐ PARTICIPATING IN PART ☑ NONE
☐ NON-PARTICIPATING (MAINTENANCE) ☐ NON-PARTICIPATING

FEDERAL SEGREGATION (if more than one Funding Source or P.I.P. type)
☐ CCO FUNDED PER CONTRACT ☐ CCO FUNDED AS FOLLOWS

FEDERAL FUNDING SOURCE	PERCENT

ADA Notice: For individuals with sensory disabilities, this document is available in alternate formats. For information call: (916) 654-6410 or TDD (916) 654-3880 or write Records and Forms Management, 1120 N Street, MS-89, Sacramento, CA 95814.

TELECOPY

California Department of Transportation

CONSTRUCTION DIVISION

TO: District 4 CCO Desk

Date: 6/23/2009

Contract No.: 4 - 0120R4

Road: SF-80-12.6/13.2

FED. No.: ACBRIM-080-1(097)N

To: SARTIPI - 04

Attention: 04 - ALVAREZ

HQ Direction: TO ISSUE AND APPROVE

CCO No. 188 **Sup. No.** 0 **Rev. No.** 1

Per Your Submittal Dated: 6/23/2009 **CCO Category Code:** C - X - S - A

MODIFY SECTION 5-1.26, "SOUND CONTROL REQUIREMENTS," OF THE SPECIAL PROVISIONS TO CHANGE THE PILE-DRIVING OPERATIONS TIME FROM "7PM - 7AM" TO "7PM TO 12PM."

NO COST AND NO TIME ADJUSTMENT FOR THIS CHANGE.

Items:	$0.00
Force Account:	$0.00
Agreed Price:	$0.00
Adj. of Comp.	$0.00
Total:	**$0.00**
Time:	**(NONE)**

ROB EFFINGER,
Acting Assistant Division Chief, by:

Bob Molera

Bob Molera
Division of Construction
1120 "N" Street, MS-44, Sacramento, CA 95814
Fax Number: (916) 654-5735
To Confirm Transmission, Call (916) 654-2735

TELECOPY

California Department of Transportation

CONSTRUCTION DIVISION

TO: District 4 CCO Desk

Date: 6/18/2009

Contract No.: 4 - 0120R4

Road: SF-80-12.6/13.2

FED. No.: ACBRIM-080-1(097)N

To: SARTIPI - 04

Attention: 04 - ALVAREZ

HQ Direction: **TO REVISE - NOT AUTHORIZED**

CCO No. 188 **Sup. No.** 0 **Rev. No.** 1

Per Your Submittal Dated: 6/17/2009 **CCO Category Code:** C - X - S - A

MODIFY SECTION 5-1.26, "SOUND CONTROL REQUIREMENTS," OF THE SPECIAL PROVISIONS TO CHANGE THE PILE-DRIVING OPERATIONS TIME RESTRICTIONS FROM "7PM - 7AM" TO "7PM TO 12PM."

NOTE: THIS RNA TELECOPY SUPERSEDES THE PREVIOUS TELECOPY. IT IS NOTED THAT THE PILE-DRIVING OPERATIONS TIME WAS SHORTENED FROM 12 TO 7 HOURS EACH DAY.

REVISE: IT APPEARS THIS CHANGE RESTRICTS THE PILE-DRIVING OPERATIONS FROM 12 TO 7 HOURS A DAY. ALSO, IT APPEARS THIS CHANGE CAUSES CHANGE IN CHARACTER OF WORK, SINCE THE ORIGINAL CONTRACTOR'S BID PRICE IS BASED ON 12 HOURS PILE-DRIVING OPERATIONS, INSTEAD OF 7 HOURS, EACH DAY. THIS CHANGE MAY SHOW NO COST AND NO TIME ADJUSTMENT FOR NOW - BUT IT SEEMS THIS CHANGE MAY POTENTIALLY AFFECT THE CONTROLLING OPERATIONS, ESPECIALLY SINCE THE ALLOWED TIME FOR PILE-DRIVING OPERATIONS SHRINKS DOWN TO 58% (7 / 12) EACH DAY. HAVE THE CALTRANS FUNCTIONAL UNITS, THAT MAY BE AFFECTED BY THE POSSIBLE RAMIFICATIONS (MONEY AND TIME) OF THIS CHANGE, GEARED UP FOR WHAT SEEMS INEVITABLE POSSIBILITY OF DEPARTMENT-CAUSED DELAY? PLEASE ADDRESS THIS ISSUE IN THE MEMO.

NO COST AND NO TIME ADJUSTMENT FOR THIS CHANGE.

Items:	$0.00
Force Account:	$0.00
Agreed Price:	$0.00
Adj. of Comp.	$0.00
Total:	**$0.00**
Time:	**(NONE)**

Contract No.: 4 - 0120R4

Road: SF-80-12.6/13.2

FED. NO.: ACBRIM-080-1(097

CCO No. 188 Sup. No. 0 Rev. No. 1 CCO Category Code: C - X - S - A

Continued:

ROB EFFINGER,
Acting Assistant Division Chief, by:

Bob Molera

Bob Molera
Division of Construction
1120 "N" Street, MS-44, Sacramento, CA 95814
Fax Number: (916) 654-5735
To Confirm Transmission, Call (916) 654-2735

STATE OF CALIFORNIA - DEPARTMENT OF TRANSPORTATION

CONTRACT CHANGE ORDER

Change Requested by: Engineer

CCO: 188	Suppl. No. 1	Contract No. 04 - 0120R4	Road SF-80-12.6/13.2	FED. AID LOC.:

To: CC MYERS INC

You are directed to make the following changes from the plans and specifications or do the following described work not included in the plans and specifications for this contract. ***NOTE: This change order is not effective until approved by the Engineer.***

Description of work to be done, estimate of quantities and prices to be paid. (Segregate between additional work at contract price, agreed price and force account.) Unless otherwise stated, rates for rental of equipment cover only such time as equipment is actually used and no allowance will be made for idle time. This last percentage shown is the net accumulated increase or decrease from the original quantity in the Engineer's Estimate.

Adjustment of Compensation at Lump Sum:

In accordance with Section 4-1.03 "Changes" of the contract Standard Specifications, provide compensation to the Contractor for additional costs incurred in driving the steel piles at Bent W5, Bent W6 and Bent W7 of the Yerba Buena Island Transition Structure (Br. No. 34-0006L/R) due to the revised sound control requirements implemented under the original Change Order No. 188.

For this work, the Contractor will be compensated a lump sum of $142,500.00. Except for any costs associated with providing sound control measurements, this sum constitutes full and final compensation for all additional costs, including all markups, due to the revised sound control requirements implemented under the original Change Order No. 188.

Estimated cost of Adjustment of Compensation at Lump Sum $142,500.00

Estimated Cost: **Increase** ☑ **Decrease** ☐ **$142,500.00**

By reason of this order the time of completion will be adjusted as follows: 0 days

Submitted by		
Signature	**Resident Engineer** BILL CASEY	**Date** 1-29-10
Approval Recommended by		
Signature Deanna Vilcheck	**Area Construction Manager** DEANNA VILCHECK	**Date** 1/29/10
Engineer Approval by		
Signature Deanna Vilcheck	**Area Construction Manager** DEANNA VILCHECK	**Date** 3/22/10

We the undersigned contractor, have given careful consideration to the change proposed and agree, if this proposal is approved, that we will provide all equipment, furnish the materials, except as may otherwise be noted above, and perform all services necessary for the work above specified, and will accept as full payment therefor the prices shown above.

NOTE: If you, the contractor, do not sign acceptance of this order, your attention is directed to the requirements of the specifications as to proceeding with the ordered work and filing a written protest within the time therein specified.

Contractor Acceptance by		
Signature	**(Print name and title)** DANIEL E. HUMICK, PRESIDENT	**Date** 3/2/10

STATE OF CALIFORNIA - DEPARTMENT OF TRANSPORTATION

CONTRACT CHANGE ORDER MEMORANDUM

TO: MIKE FORNER / DEANNA VILCHECK	FILE: **E.A.** 04 - 0120R4
	CO-RTE-PM SF-80-12.6/13.2
FROM: BILL CASEY	**FED. NO.**
CCO#: **188** SUPPLEMENT#: **1** Category Code: **CXSA**	CONTINGENCY BALANCE (incl. this change) **$41,811,803.59**
COST: **$142,500.00** INCREASE ☑ DECREASE ☐	HEADQUARTERS APPROVAL REQUIRED? ☑ YES ☐ NO
SUPPLEMENTAL FUNDS PROVIDED: **$0.00**	IS THIS REQUEST IN ACCORDANCE WITH ENVIRONMENTAL DOCUMENTS? ☑ YES ☐ NO
CCO DESCRIPTION: Sound Control Impacts to Pile Driving	**PROJECT DESCRIPTION:** CONSTRUCT ROUTE 80 TEMP BYPASS STRUCTURE

Original Contract Time:	Time Adj. This Change:	Previously Approved CCO Time Adjustments:	Percentage Time Adjusted: (including this change)	Total # of Unreconciled Deferred Time CCO(s): (including this change)
475 Day(s)	**0** Day(s)	**1660** Day(s)	**349** %	**0**

THIS CHANGE ORDER PROVIDES FOR:

Compensation to the contractor for additional pile driving costs incurred due to the revised sound control specification implemented under the original change order.

This project was awarded in March 2004 to construct a detour that will allow for the tie in of the new east span of the San Francisco Oakland Bay Bridge to Yerba Buena Island. The TBS encompasses three main structures, the East Tie-In to the existing bridge, the West Tie-In (WTI) to Yerba Buena Island and the Viaduct structure between the two tie ins.

The Department issued a December 25, 2006 strategy memo which was approved by Tony Anziano (Toll Bridge Program Manager), Richard Land (Chief Engineer) and subsequently by the TBPOC that called for the advance construction of foundation work for the Yerba Buena Island Transition Structure (YBITS) under this contract.

The revised sound control requirement issued under the original Change Order No. 188 limited pile driving operations to a 7-hour window from 12:00 p.m. to 7:00 p.m. in lieu of the 12-hour window provided under the original contract. This restriction resulted in decreased production during the pile driving operations at the Bent W5, W6 and W7 foundations being constructed under this contract. Driven piles for the temporary shoring used at Bents W5 and W6 were also affected. This change order provides compensation for these additional costs.

The contractor had been working 10-hour pile driving shifts in order to maximize production. The revised sound control requirement being implemented reduced the work shift to 7 hours. An as-planned verses actual costs analysis was performed based upon actual 10-hour shift production verses the 7-hour shift production.

Compensation shall be paid as an adjustment of compensation at an agreed lump sum of $142,500.00 which shall be financed from the contract's contingency funds. A cost estimate is on file.

Any costs associated with providing sound control measurements as specified under the original change order are deferred. At this time there have been no costs incurred for this work.

No adjustment of contract time is warranted as this change will not affect the controlling operation.

This change was concurred with by Alec Melkonians - Project Manager and Jaime Gutierrez - Project Engineer.

Maintenance concurrence is not required as this is an administrative change and doesn't affect any permanent roadway features.

ADA Notice: For individuals with sensory disabilities, this document is available in alternate formats. For information call: (916) 654-6410 or TDD (916) 654-3880 or write Records and Forms Management, 1120 N Street, MS-89, Sacramento, CA 95814.

CONCURRED BY:		
Construction Engineer:	Bill Casey, Resident Engineer	Date 1-29-10
Bridge Engineer:		Date
Project Engineer:	~~Minh B. Nguyen~~ Jaime Gutierrez, PE	Date 4/1/10 ~~1/28/10~~
Project Manager:	Alec Melkonians	Date 1/28/10
FHWA Rep.:		Date
Environmental:		Date
Other (specify):		Date
Other (specify):		Date
District Prior Approval By:		Date
HQ (Issue Approve) By:	Larry Salhaney, HQ CCO Engine	Date 1/29/10
Resident Engineer's Signature:		Date
1-29-10		

ESTIMATE OF COST

	THIS REQUEST	TOTAL TO DATE
ITEMS	$0.00	$0.00
FORCE ACCOUNT	$0.00	$0.00
AGREED PRICE	$0.00	$0.00
ADJUSTMENT	$142,500.00	$142,500.00
TOTAL	$142,500.00	$142,500.00

FEDERAL PARTICIPATION

☐ PARTICIPATING ☐ PARTICIPATING IN PART ☑ NONE
☐ NON-PARTICIPATING (MAINTENANCE) ☐ NON-PARTICIPATING

FEDERAL SEGREGATION (if more than one Funding Source or P.I.P. type)
☐ CCO FUNDED PER CONTRACT ☐ CCO FUNDED AS FOLLOWS

FEDERAL FUNDING SOURCE	PERCENT

ADA Notice: For individuals with sensory disabilities, this document is available in alternate formats. For information call: (916) 654-6410 or TDD (916) 654-3880 or write Records and Forms Management, 1120 N Street, MS-89, Sacramento, CA 95814.

TELECOPY

California Department of Transportation

CONSTRUCTION DIVISION

TO: District 4 CCO Desk

Date: 1/29/2010

Contract No.: 4 - 0120R4

Road: SF-80-12.6/13.2

FED. No.: NONE

To: SARTIPI - 04

Attention: 04 - CHISHTY

HQ Direction: TO ISSUE AND APPROVE

CCO No. 188 **Sup. No.** 1 **Rev. No.** 0

Per Your Submittal Dated: 1/29/2010 **CCO Category Code:** C - X - S - A

COMPENSATION TO THE CONTRACTOR FOR ADDITIONAL PILE DRIVING COSTS INCURRED DUE TO THE REVISED SOUND CONTROL SPECIFICATION IMPLEMENTED UNDER THE ORIGINAL CHANGE ORDER.

TOTAL COST FOR THIS CHANGE IS SHOWN AS $142,500.00 WITH NO TIME ADJUSTMENT.

Items:	$0.00
Force Account:	$0.00
Agreed Price:	$0.00
Adj. of Comp.	$142,500.00
Total:	**$142,500.00**
Time:	**(NONE)**

Scott Jarvis,
Assistant Division Chief,
by:

Larry Salhaney

Division of Construction
1120 "N" Street, MS-44, Sacramento, CA 95814
Fax Number: (916) 654-5735
To Confirm Transmission, Call (916) 654-5259

STATE OF CALIFORNIA - DEPARTMENT OF TRANSPORTATION

CONTRACT CHANGE ORDER

Change Requested by: Engineer

CCO 192	Suppl. No. 0	Contract No. 04 - 0120R4	Road SF-80-12.6/13.2	FED. AID LOC.: ACBRIM-080-1(097)N

To: CC MYERS INC

You are directed to make the following changes from the plans and specifications or do the following described work not included in the plans and specifications for this contract. ***NOTE: This change order is not effective until approved by the Engineer.***

Description of work to be done, estimate of quantities and prices to be paid. (Segregate between additional work at contract price, agreed price and force account.) Unless otherwise stated, rates for rental of equipment cover only such time as equipment is actually used and no allowance will be made for idle time. This last percentage shown is the net accumulated increase or decrease from the original quantity in the Engineer's Estimate.

Extra Work at Lump Sum:

Compensate the Contractor for all additional labor, equipment, and material costs incurred to install and remove the cable bracing system at the upper deck during the removal of the existing structure from Bent YB1 to Bent YB4.

The Contractor agrees to accept the lump sum of $111,540.00 as full compensation, including all markups, surcharges and profit, for all additional costs necessary to complete this work unless otherwise delineated in this change. Work shall be done in accordance with the engineering design done by the Contractor's engineer and approved by the Department. The aforementioned lump sum shall include compensation for all labor, equipment and material escalation costs.

It is expressly understood and agreed to that the following work shall be compensated as provided for under various existing and / or anticipated Contract Change Orders:

1. Flagging.
2. Traffic control.
3. Engineering associated with temporary support design.

Estimated Cost of Extra Work at Lump Sum $111,540.00

Estimated Cost: **Increase** ☑ **Decrease** ☐ **$111,540.00**

By reason of this order the time of completion will be adjusted as follows: Deferred

Submitted by		
Signature	**Resident Engineer** BILL CASEY	**Date** 7-18-09
Approval Recommended by		
Signature Deanna Vilcheck	**Area Construction Manager** DEANNA VILCHECK	**Date** 7/21/09
Engineer Approval by		
Signature Deanna Vilcheck	**Area Construction Manager** DEANNA VILCHECK	**Date** 8/13/09

We the undersigned contractor, have given careful consideration to the change proposed and agree, if this proposal is approved, that we will provide all equipment, furnish the materials, except as may otherwise be noted above, and perform all services necessary for the work above specified, and will accept as full payment therefor the prices shown above.

NOTE: If you, the contractor, do not sign acceptance of this order, your attention is directed to the requirements of the specifications as to proceeding with the ordered work and filing a written protest within the time therein specified.

Contractor Acceptance by		
Signature	**(Print name and title)** DANIEL E. HIMICK, PRESIDENT	**Date** 9/4/09

STATE OF CALIFORNIA - DEPARTMENT OF TRANSPORTATION

CONTRACT CHANGE ORDER MEMORANDUM

DATE: 7/13/2009 Page 1 of 2

TO: MIKE FORNER / DEANNA VILCHECK	FILE: E.A. 04 - 0120R4
	CO-RTE-PM SF-80-12.6/13.2
FROM: BILL CASEY	FED. NO. ACBRIM-080-1(097)N
CCO#: 192 SUPPLEMENT#: 0 Category Code: CHPA	CONTINGENCY BALANCE (incl. this change) $32,333,978.59
COST: $111,540.00 INCREASE ☑ DECREASE ☐	HEADQUARTERS APPROVAL REQUIRED? ☐ YES ☑ NO
SUPPLEMENTAL FUNDS PROVIDED: $0.00	IS THIS REQUEST IN ACCORDANCE WITH ENVIRONMENTAL DOCUMENTS? ☑ YES ☐ NO
CCO DESCRIPTION: ETI Cable Bracing for YB1-YB3 Truss Demo	**PROJECT DESCRIPTION:** CONSTRUCT ROUTE 80 TEMP BYPASS STRUCTURE

Original Contract Time:	Time Adj. This Change:	Previously Approved CCO Time Adjustments:	Percentage Time Adjusted: (including this change)	Total # of Unreconciled Deferred Time CCO(s): (including this change)
475 Day(s)	DEF Day(s)	1195 Day(s)	252 %	8

THIS CHANGE ORDER PROVIDES FOR:

compensating the Contractor for all additional labor, equipment, and material costs incurred to install and remove the cable bracing system at the upper deck during the removal of the existing structure from Bent YB1 to Bent YB4.

This project, the Yerba Buena Island Detour (YBID), was awarded in March 2004 to construct a detour that will allow for the tie in of the new east span of the San Francisco Oakland Bay Bridge to Yerba Buena Island. The YBID encompasses three main structures, the East Tie-In to the existing bridge, the West Tie-In (WTI) to Yerba Buena Island, and the Viaduct structure between the two tie ins.

Two separate Department strategy memorandums issued on December 14, 2006 entitled 'Strategy for South-South Detour Contract Completion' and December 25, 2006 entitled 'Recommendation to Construct Select Yerba Buena Island Transition Structure Foundations by Contract Change Order' were approved by Tony Anziano - Toll Bridge Program Manager, Richard Land - Chief Engineer, and the Toll Bridge Program Oversight Committee (TBPOC), which recommended the design of the ETI and WTI structures and enhancement of the Viaduct be assumed by the Department as opposed to the as-bid performance based contractor design and that a portion of the YBITS foundation work be performed under this contract by change order.

The Contractor will demolish and remove the existing double deck section of the bridge under the original contract and CCO 65 - Supplement No.1. CCO 65S1 excluded the installation or removal of any cable bracing system. The Engineer now requires installation and removal of a temporary cable bracing system at the upper deck during the demolition. This change is necessary in order to compensate the Contractor for the additional costs associated with the temporary support system.

Compensation for this change shall be made as Extra Work at Agreed Lump Sum in the amount of $111,540.00, which can be financed through the contingency fund. A cost analysis is in the project files.

Adjustment of contract time is deferred pending completion of the work specified in this change as it may become the controlling operation in accordance with Section 8-1.07 "Liquidated Damages", of the Standard Specifications and Section 10-1.20 "Time Related Overhead (TRO)" of the Special Provisions.

Compensation for delays resulting from this work will be made in accordance with Section 8-1.09 "Right of Way Delays" of the Standard Specifications and Section 10-1.20 "Time Related Overhead" of the Special Provisions.

This change was concurred by Alec Melkonians - Asst. Project Manager and Hong Wong - Project Engineer.

Maintenance concurrence is not required, as this work does not affect any permanent roadway features.

ADA Notice: For individuals with sensory disabilities, this document is available in alternate formats. For information call: (916) 654-6410 or TDD (916) 654-3880 or write Records and Forms Management, 1120 N Street, MS-89, Sacramento, CA 95814.

CONCURRED BY:		
Construction Engineer:	Bill Casey, Resident Engineer	Date 7-19-09
Bridge Engineer:		Date
Project Engineer:	Hong Wong, PE	Date 7/14/09
Project Manager:	Alec Melkonians	Date 7/14/09
FHWA Rep.:		Date
Environmental:		Date
Other (specify):		Date
Other (specify):		Date
District Prior Approval By:		Date
HQ (Issue Approve) By:		Date
Resident Engineer's Signature:		Date 7-19-09

ESTIMATE OF COST

	THIS REQUEST	TOTAL TO DATE
ITEMS	$0.00	$0.00
FORCE ACCOUNT	$0.00	$0.00
AGREED PRICE	$111,540.00	$111,540.00
ADJUSTMENT	$0.00	$0.00
TOTAL	$111,540.00	$111,540.00

FEDERAL PARTICIPATION

☐ PARTICIPATING ☐ PARTICIPATING IN PART ☑ NONE
☐ NON-PARTICIPATING (MAINTENANCE) ☐ NON-PARTICIPATING

FEDERAL SEGREGATION (if more than one Funding Source or P.I.P. type)
☐ CCO FUNDED PER CONTRACT ☐ CCO FUNDED AS FOLLOWS

FEDERAL FUNDING SOURCE	PERCENT

ADA Notice: For individuals with sensory disabilities, this document is available in alternate formats. For information call: (916) 654-6410 or TDD (916) 654-3880 or write Records and Forms Management, 1120 N Street, MS-89, Sacramento, CA 95814.

DEPARTMENT OF TRANSPORTATION – District 4 Toll Bridge Program
325 Burma Rd.
Oakland, CA 94607
Telephone (510) 622-4200 Fax (510) 622-4266

LETTER OF TRANSMITTAL

To: CC MYERS INC
3286 FITZGERALD ROAD
RANCHO CORDOVA CA 95741

Attn: Bob Coupe

Date: 28-Jul-2009

Contract No: 04-0120R4
04-SF-80-12.6-13.2

Job Name: South – South Detour

Transmittal No.: 05.03.02-001690

Subject : Approved Contract Change Order No. 193

Enclosed please find the following items:

[ ]	Shop Drawings	[X]	Change Order	[ ]	Submittal(s)
[ ]	WSWD Report(s)	[ ]	Plans	[ ]	Other
[ ]	Daily Extra Work Reports	[ ]	Progress Payment		
[ ]	RFI Responses	[ ]	Dept. Letter		

Item	Date	Copies	Sheets	Description
1	28-Jul-2009	1	1	Approved Contract Change Order No. 193

These Are Transmitted As Checked Below:

[ ]	For Approval or Action	[ ]	Approved as Submitted	[ ]	Resubmit ___	Copies for approval
[X]	For Your Use	[X]	Approved as Noted	[ ]	Submit ___	Copies for distribution
[ ]	As Requested	[ ]	Returned for Corrections	[ ]	Return ___	Corrected prints
[ ]	For Review & Comment	[ ]	Other	[ ]	Sign and Return	

Remarks:

Signed: 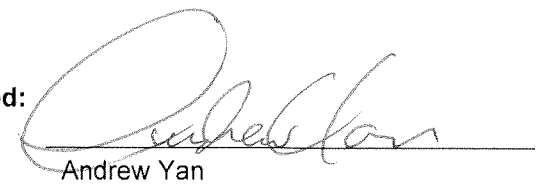
Andrew Yan

Copy To:
File: 05.03.02, 49.193.01

STATE OF CALIFORNIA - DEPARTMENT OF TRANSPORTATION

CONTRACT CHANGE ORDER

Change Requested by: Engineer

CCO 193	Suppl. No. 0	Contract No. 04 - 0120R4	Road SF-80-12.6/13.2	FED. AID LOC.: ACBRIM-080-1(097)N

To: **CC MYERS INC**

You are directed to make the following changes from the plans and specifications or do the following described work not included in the plans and specifications for this contract. ***NOTE: This change order is not effective until approved by the Engineer.***

Description of work to be done, estimate of quantities and prices to be paid. (Segregate between additional work at contract price, agreed price and force account.) Unless otherwise stated, rates for rental of equipment cover only such time as equipment is actually used and no allowance will be made for idle time. This last percentage shown is the net accumulated increase or decrease from the original quantity in the Engineer's Estimate.

Adjustment of Compensation at Lump Sum:

Provide compensation to the Contractor for all outstanding costs incurred by Thompson Metal Fab, Inc. associated with the steel fabrication of the steel skid bents and beams of the East Tie-In (ETI) portion of the Temporary Bypass Structure (Bridge No. 34-0006 (TEMP)).

For these costs, the Contractor shall be compensated a lump sum of $256,140.00 which constitutes full and final compensation, including all markups, for all outstanding costs associated with the fabrication of the skid bent and beams.

Any outstanding costs associated with the procurement of raw steel, the transportation and handling of the fabricated steel to the jobsite and the erection of the skid bents and beam are excluded from this change order.

Total Cost of Adjustment of Compensation at Lump Sum $256,140.00

Estimated Cost: **Increase** ☑ **Decrease** ☐ **$256,140.00**

By reason of this order the time of completion will be adjusted as follows: Deferred

Submitted by		
Signature	**Resident Engineer** BILL CASEY	**Date** 7-3-09
Approval Recommended by		
Signature Deanna Vilcheck	**Area Construction Manager** DEANNA VILCHECK	**Date** 7/6/09
Engineer Approval by		
Signature Deanna Vilcheck	**Area Construction Manager** DEANNA VILCHECK	**Date** 7/16/09

We the undersigned contractor, have given careful consideration to the change proposed and agree, if this proposal is approved, that we will provide all equipment, furnish the materials, except as may otherwise be noted above, and perform all services necessary for the work above specified, and will accept as full payment therefor the prices shown above.

NOTE: If you, the contractor, do not sign acceptance of this order, your attention is directed to the requirements of the specifications as to proceeding with the ordered work and filing a written protest within the time therein specified.

Contractor Acceptance by		
Signature	**(Print name and title)** DANIEL E. Hanuck, PRESIDENT	**Date** 7/14/09

STATE OF CALIFORNIA - DEPARTMENT OF TRANSPORTATION

CONTRACT CHANGE ORDER MEMORANDUM

TO: MIKE FORNER / DEANNA VILCHECK	FILE: E.A. 04 - 0120R4
FROM: BILL CASEY	CO-RTE-PM SF-80-12.6/13.2
	FED. NO. ACBRIM-080-1(097)N
CCO#: **193** SUPPLEMENT#: **0** Category Code: **CHPA**	CONTINGENCY BALANCE (incl. this change) **$35,268,063.59**
COST: **$256,140.00** INCREASE ☑ DECREASE ☐	HEADQUARTERS APPROVAL REQUIRED? ☑ YES ☐ NO
SUPPLEMENTAL FUNDS PROVIDED: **$0.00**	IS THIS REQUEST IN ACCORDANCE WITH ENVIRONMENTAL DOCUMENTS? ☑ YES ☐ NO
CCO DESCRIPTION: Skid Beam Fabrication Mill to Bear Costs	**PROJECT DESCRIPTION:** CONSTRUCT ROUTE 80 TEMP BYPASS STRUCTURE

Original Contract Time:	Time Adj. This Change:	Previously Approved CCO Time Adjustments:	Percentage Time Adjusted: (including this change)	Total # of Unreconciled Deferred Time CCO(s): (including this change)
475 Day(s)	**DEF** Day(s)	**1195** Day(s)	**252** %	**8**

THIS CHANGE ORDER PROVIDES FOR:

compensation to the Contractor for additional fabrication costs incurred by Thompson Metal Fab, Inc. associated with the steel fabrication of the East Tie-In skid bent system.

This project, the Yerba Buena Island Detour (YBID), was awarded in March 2004 to construct a detour that will allow for the tie in of the new east span of the San Francisco Oakland Bay Bridge to Yerba Buena Island. The YBID encompasses three main structures, the East Tie-In to the existing bridge, the West Tie-In (WTI) to Yerba Buena Island and the Viaduct structure between the two tie ins.

A December 14, 2006 Department strategy memorandum, approved by Tony Anziano, Toll Bridge Program Manager, and Richard Land, Chief Engineer, recommended that the Department assume the design responsibility for the East Tie-In (ETI) structure. Based on this memorandum, the design of the structure was changed from a design that incorporated the existing steel truss bridge with the new structure to a design that replaces the existing structure with a new structure (roll out / roll in).

The contract calls for the fabrication of a steel skid bent system that will provide the support for the planned roll out of the YB4 steel truss span of the existing bridge and roll in of the new ETI steel truss span necessary to place traffic on the new TBS. These skid bents are comprised of approximately 3,000 metric tons of steel members. This change order acts to close out all outstanding costs associated with the fabrication of these members.

During the shop fabrication process the Contractor incurred additional costs associated with the pre-assembly of box members into the cross frames. The design provided zero tolerance for this fit up and caused the Contractor to have to machine 1.5 mm to 3mm of each end of the box members to allow the fit up into the cross frame gusset plates. This machining is usually specifically called for as a mill to bear connection but was not specified under the skid bent plan sheets. The Contractor was also required to match face the bottom of the cross beam to the top of the skid beam and required custom made machined shims to be fabricated. In addition, both the pipe to pipe connections and the pipe to box beam connections required machining and or shims in order to meet the required fit up tolerances. This machining and shimming was not specified under the skid bent plan sheets.

Compensation for these fabrication modifications to the skid bent shall be paid as an adjustment of compensation at an agreed lump sum price of $256,140.00 which shall be financed from the contract's contingency funds. A cost analysis is on file.

Adjustment of contract time is deferred pending completion of the work specified in this change as it may become the controlling operation in accordance with Section 8-1.07 "Liquidated Damages", of the Standard Specifications and Section 10-1.20 "Time Related Overhead (TRO)" of the Special Provisions.

Compensation for delays resulting from this work will be made in accordance with Section 8-1.09 "Right of Way Delays" of the Standard Specifications and Section 10-1.20 "Time Related Overhead" of the Special Provisions.

This change was concurred with by Alec Melkonians - Asst. Project Manager and Hong Wong - Project Engineer.

Maintenance concurrence is not required as this change doesn't affect any permanent roadway features. FHWA concurrence is not required as they are no longer providing funds for this project.

ADA Notice: For individuals with sensory disabilities, this document is available in alternate formats. For information call: (916) 654-6410 or TDD (916) 654-3880 or write Records and Forms Management, 1120 N Street, MS-89, Sacramento, CA 95814.

CONTRACT CHANGE ORDER MEMORANDUM

RECEIVED
01057 SEP 28 09

CONCURRED BY:		
Construction Engineer:	Bill Casey, Resident Engineer	Date 7-3-09
Bridge Engineer:		Date
Project Engineer:	Hong Wong, PE	Date 7/1/09
Project Manager:	Alec Melkonians	Date 7/1/09
FHWA Rep.:		Date
Environmental:		Date
Other (specify):		Date
Other (specify):		Date
District Prior Approval By:		Date
HQ (Issue Approve) By:	Bob Molera, HQ CCO Engineer	Date 7/7/09
Resident Engineer's Signature:		Date 7-3-09

ESTIMATE OF COST

	THIS REQUEST	TOTAL TO DATE
ITEMS	$0.00	$0.00
FORCE ACCOUNT	$0.00	$0.00
AGREED PRICE	$0.00	$0.00
ADJUSTMENT	$256,140.00	$256,140.00
TOTAL	$256,140.00	$256,140.00

FEDERAL PARTICIPATION

☐ PARTICIPATING ☐ PARTICIPATING IN PART ☑ NONE
☐ NON-PARTICIPATING (MAINTENANCE) ☐ NON-PARTICIPATING

FEDERAL SEGREGATION (if more than one Funding Source or P.I.P. type)
☐ CCO FUNDED PER CONTRACT ☐ CCO FUNDED AS FOLLOWS

FEDERAL FUNDING SOURCE	PERCENT

ADA Notice: For individuals with sensory disabilities, this document is available in alternate formats. For information call: (916) 654-6410 or TDD (916) 654-3880 or write Records and Forms Management, 1120 N Street, MS-89, Sacramento, CA 95814.

TELECOPY

California Department of Transportation

CONSTRUCTION DIVISION

TO: District 4 CCO Desk

Date: 7/7/2009

Contract No.: 4 - 0120R4

Road: SF-80-12.6/13.2

FED. No.: ACBRIM-080-1(097)N

To: SARTIPI - 04

Attention: 04 - ALVAREZ

HQ Direction: TO ISSUE AND APPROVE

CCO No. 193 **Sup. No.** 0 **Rev. No.** 0

Per Your Submittal Dated: 7/6/2009 **CCO Category Code:** C - H - P - A

COMPENSATE THE CONTRACTOR FOR ADDITIONAL FABRICATION COSTS INCURRED BY THOMPSON METAL FAB, INC ASSOCIATED WITH THE STEEL FABRICATION OF THE EAST TIE-IN SKID BENT SYSTEM.

I&A IS CONTINGENT ON THE FOLLOWING:
1) TIMELY PROCESSING OF A SUPPLEMENTAL CCO TO RESOLVE THE DEFERRED TIME ASPECT OF THIS CHANGE.
2) DENOTE IN THE MEMO IF THIS CONTRACT NO LONGER REQUIRES FULL FHWA OVERSIGHT. OTHERWISE, OBTAIN FHWA CONCURRENCE AND INDICATE SO IN THE MEMO.

TOTAL COST FOR THIS CHANGE IS SHOWN AS $256,140.00 WITH DEFERRED TIME ADJUSTMENT.

Items:	$0.00
Force Account:	$0.00
Agreed Price:	$0.00
Adj. of Comp.	$256,140.00
Total:	**$256,140.00**
Time:	**(DEFERRED)**

ROB EFFINGER,
Acting Assistant Division Chief, by:

Bob Molera

Bob Molera
Division of Construction
1120 "N" Street, MS-44, Sacramento, CA 95814
Fax Number: (916) 654-5735
To Confirm Transmission, Call (916) 654-2735

DEPARTMENT OF TRANSPORTATION – District 4 Toll Bridge Program
325 Burma Rd.
Oakland, CA 94607
Telephone (510) 622-4200 Fax (510) 622-4266

LETTER OF TRANSMITTAL

To: CC MYERS INC
3286 FITZGERALD ROAD
RANCHO CORDOVA CA 95741

Attn: Bob Coupe

Date: 03-Sep-2009

Contract No: 04-0120R4
04-SF-80-12.6-13.2

Job Name: South – South Detour

Transmittal No.: 05.03.02-001752

Subject : Approved Contract Change Order No. 195

Enclosed please find the following items:

[ ]	Shop Drawings	[X]	Change Order	[ ]	Submittal(s)
[ ]	WSWD Report(s)	[ ]	Plans	[ ]	Other
[ ]	Daily Extra Work Reports	[ ]	Progress Payment		
[ ]	RFI Responses	[ ]	Dept. Letter		

Item	Date	Copies	Sheets	Description
1	03-Sep-2009	1	8	Approved Contract Change Order No. 195

These Are Transmitted As Checked Below:

[ ]	For Approval or Action	[ ]	Approved as Submitted	[ ]	Resubmit ___	Copies for approval
[X]	For Your Use	[X]	Approved as Noted	[ ]	Submit ___	Copies for distribution
[ ]	As Requested	[ ]	Returned for Corrections	[ ]	Return ___	Corrected prints
[ ]	For Review & Comment	[ ]	Other	[ ]	Sign and Return	

Remarks:

Signed:

Andrew Yan

Copy To:
File: 05.03.02, 49.195.01

STATE OF CALIFORNIA - DEPARTMENT OF TRANSPORTATION

CONTRACT CHANGE ORDER

Change Requested by: Engineer

CCO 195	Suppl. No. 0	Contract No. 04 - 0120R4	Road SF-80-12.6/13.2	FED. AID LOC.: ACBRIM-080-1(097)N

To: **CC MYERS INC**

You are directed to make the following changes from the plans and specifications or do the following described work not included in the plans and specifications for this contract. ***NOTE: This change order is not effective until approved by the Engineer.***

Description of work to be done, estimate of quantities and prices to be paid. (Segregate between additional work at contract price, agreed price and force account.) Unless otherwise stated, rates for rental of equipment cover only such time as equipment is actually used and no allowance will be made for idle time. This last percentage shown is the net accumulated increase or decrease from the original quantity in the Engineer's Estimate.

Extra Work at Force Account:

Provide for the construction of the stairway, including CIDH piers, concrete landings, timber posts, stringers, joists, decking handrails, and all appurtenances as shown on Sheets No. 2 through 8 of this change order and as authorized by the Engineer.

Estimated Cost of Extra Work at Force Account $500,000.00

Stairway shall be constructed in conformance with Sections 57 and 58 of the Standard Specifications.

On Drawing L-1, Notes 1 and 2 are deleted (this eliminates the redwood fence and lights).

Do not paint the structure (in lieu of any paint called for in the Standard Specifications).

Contractor to provide galvanized metal pipe handrail with approved brackets per detail on Sheet 2 of 8. Provide standard pipe cap at each end of the handrail sections.

Contractor to provide samples of the wood railing (2x4 and 2x6 PT DF1 as shown on Drawing ST-5), treads (4x12 PT DF2 as shown on Drawing ST-3) and decking at landings (2x6 RDWD decking as shown on Drawing ST-3) for the Engineer's authorization prior to purchasing.

Estimated Cost: **Increase** ☑ **Decrease** ☐ **$500,000.00**

By reason of this order the time of completion will be adjusted as follows: 0 days

Submitted by		
Signature	**Resident Engineer** BILL CASEY	**Date** 7-27-09
Approval Recommended by		
Signature Deanna Vilcheck	**Area Construction Manager** DEANNA VILCHECK	**Date** 7/30/09
Engineer Approval by		
Signature Deanna Vilcheck	**Area Construction Manager** DEANNA VILCHECK	**Date** 8/25/09

We the undersigned contractor, have given careful consideration to the change proposed and agree, if this proposal is approved, that we will provide all equipment, furnish the materials, except as may otherwise be noted above, and perform all services necessary for the work above specified, and will accept as full payment therefor the prices shown above.

NOTE: If you, the contractor, do not sign acceptance of this order, your attention is directed to the requirements of the specifications as to proceeding with the ordered work and filing a written protest within the time therein specified.

Contractor Acceptance by		
Signature	**(Print name and title)** DANIEL E. HUMICK, PRESIDENT	**Date** 8/24/09

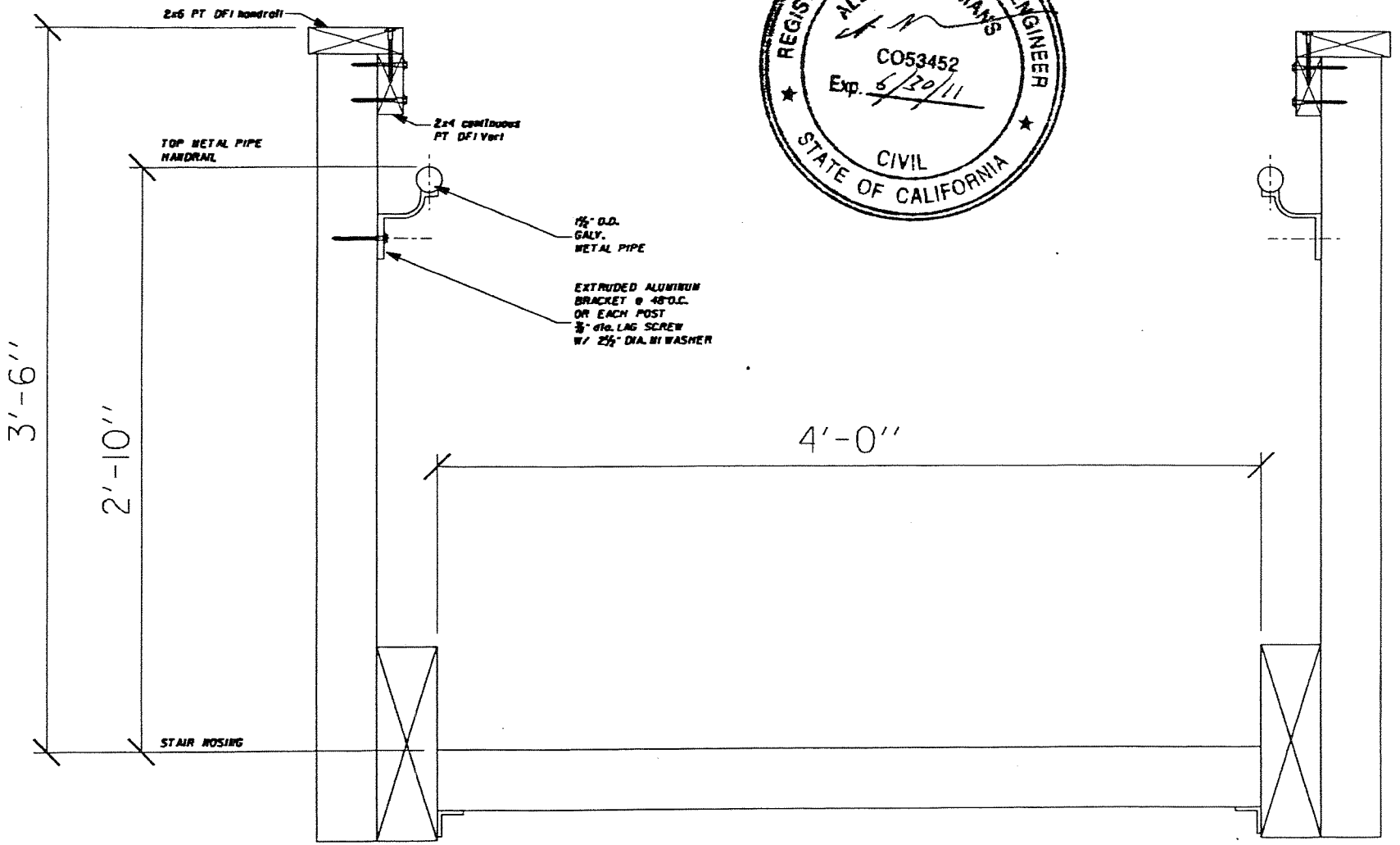

ARCHITECTURAL HANDRAIL DETAIL

00 Scale 1" = 1'-0"

REGISTERED PROFESSIONAL ENGINEER
ALEC MELKONIAN'S
CO53452
Exp. 6/30/11
CIVIL
STATE OF CALIFORNIA

CONTRACT NO. 04-0120R4

CONTRACT CHANGE ORDER NO 195

SHEET 2 OF 8

DIST	COUNTY	ROUTE	POST MILES TOTAL PROJECT	SHEET NO.	TOTAL SHEETS
04	SF	80	12.6/13.2		

REGISTERED CIVIL ENGINEER

PLANS APPROVAL DATE

The State of California or its officers or agents shall not be responsible for the accuracy or completeness of electronic copies of this plan sheet.

REGISTERED PROFESSIONAL ENGINEER — CIVIL — STATE OF CALIFORNIA

N 647,135.121
E 1,835,997.870

N 647,134.173
E 1,835,999.434

32 - BEGIN OF GABION WALL
N 647,133.680
E 1,835,999.400

N 647,075.202
E 1,835,968.428

N 647,074.409
E 1,835,965.730

14.9 M
14.2 M
14.0 M
14.8 M
8.5 M
5.1 M
4.7 M
5.4 M
4.8 M
7.6 M

REGISTERED PROFESSIONAL ENGINEER — ALEC MELKONIANS — CO53452 Exp. 6/30/11 — CIVIL — STATE OF CALIFORNIA

NOTE:

~~1) Redwood fence (6') shall be placed on one side and along the stairway as screener; its length and exact location shall be determined by the engineer~~

~~2) Lights shall be installed on the stairway as directed by the engineer~~

3) Refer to Structural Detail sheets for additional stair dimensions

CONTRACT NO. 04-0120R4

CONTRACT CHANGE ORDER NO 195

SHEET 3 OF 8

STAIR ON YBI
LAYOUT

ALL DIMENSIONS ARE IN METERS UNLESS OTHERWISE SHOWN

NO SCALE

L-1

CALCULATED/ DESIGNED BY

CHECKED BY

DATE | REVISED BY | DATE REVISED

PROJECT ENGINEER

STATE OF CALIFORNIA - DEPARTMENT OF TRANSPORTATION
Caltrans PROJECT DEVELOPMENT

LAST REVISION 04-30-09 | DATE PLOTTED => $DATE | TIME PLOTTED => $TIME

DIST.	COUNTY	ROUTE	POST MILES TOTAL PROJECT	SHEET NO.	TOTAL SHEETS

Brian T. Sutliff - 09
REGISTERED CIVIL ENGINEER DATE

REGISTERED PROFESSIONAL ENGINEER
Brian T. Sutliff
No. 3862
Exp. 3-31-10
STRUCTURAL
STATE OF CALIFORNIA

PLANS APPROVAL DATE

The State of California or its officers or agents shall not be responsible for the accuracy or completeness of electronic copies of this plan sheet.

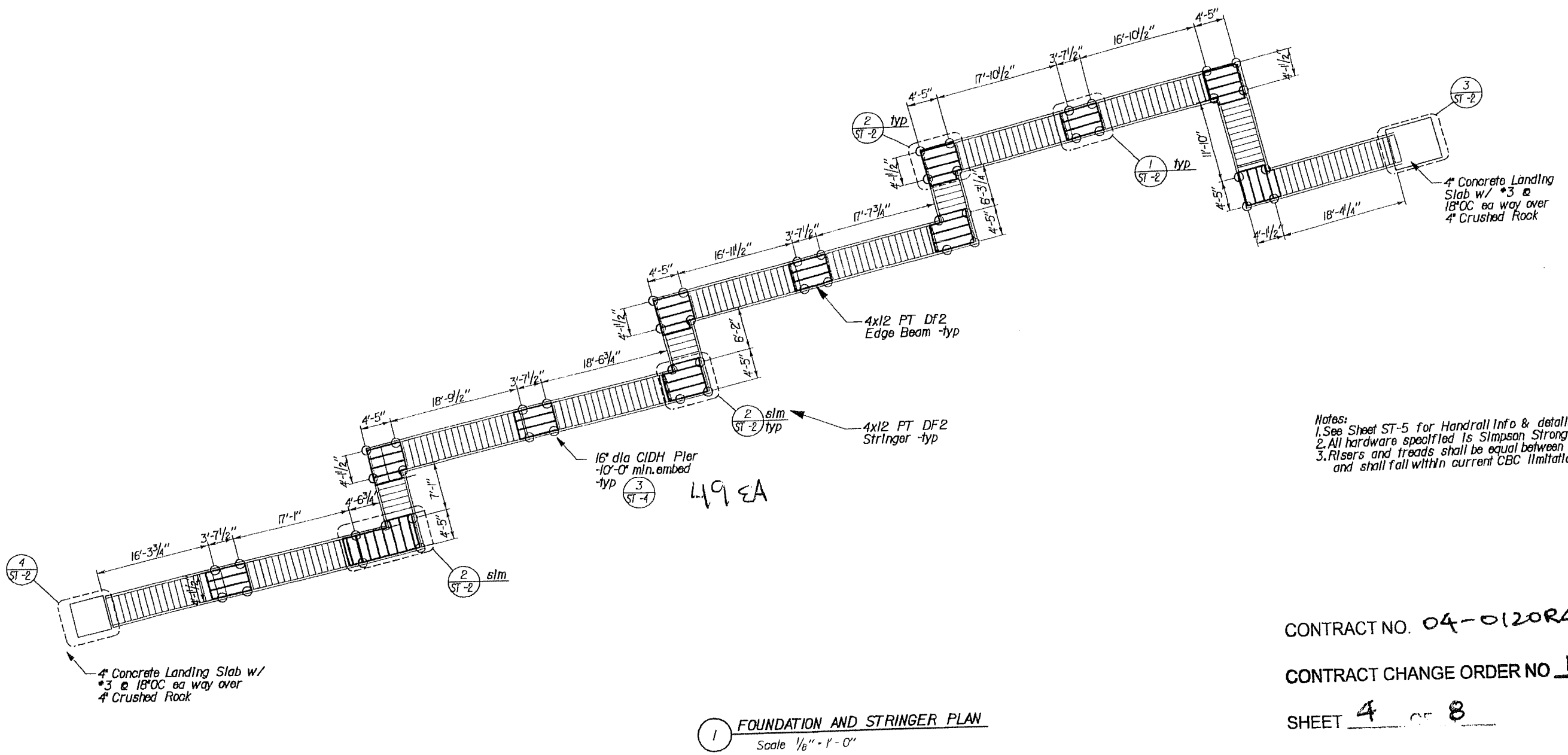

1 FOUNDATION AND STRINGER PLAN
Scale 1/8" = 1'-0"

Notes:
1. See Sheet ST-5 for Handrail Info & details.
2. All hardware specified Is Simpson Strongtie or equal.
3. Risers and treads shall be equal between landings and shall fall within current CBC limitations.

CONTRACT NO. 04-0120R4

CONTRACT CHANGE ORDER NO 195

SHEET 4 OF 8

DESIGN	BY	CHECKED
DETAILS	BY	CHECKED
QUANTITIES	BY	CHECKED

STATE OF CALIFORNIA
DEPARTMENT OF TRANSPORTATION

DIVISION OF ENGINEERING SERVICES
ARCHITECTURAL AND STRUCTURAL DESIGN

CU 240

BRIDGE NO.	STAIR ON YERBA BUENA ISLAND	SHEET ST-1
POST MILE 12.6	X X X FOUNDATION LAYOUT	

DISREGARD PRINTS BEARING EARLIER REVISION DATES → REVISION DATES (PRELIMINARY STAGE ONLY) 03-26-09 04-08-09 05-15-09 SHEET OF

9-MAY-2009 13:09

DIST.	COUNTY	ROUTE	POST MILES TOTAL PROJECT	SHEET NO.	TOTAL SHEETS

Brian T. Suttaff - 09
REGISTERED CIVIL ENGINEER DATE

REGISTERED PROFESSIONAL ENGINEER
Brian T. Suttaff
No. 3862
Exp. 3-31-10
STRUCTURAL
STATE OF CALIFORNIA

PLANS APPROVAL DATE

The State of California or its officers or agents shall not be responsible for the accuracy or completeness of electronic copies of this plan sheet.

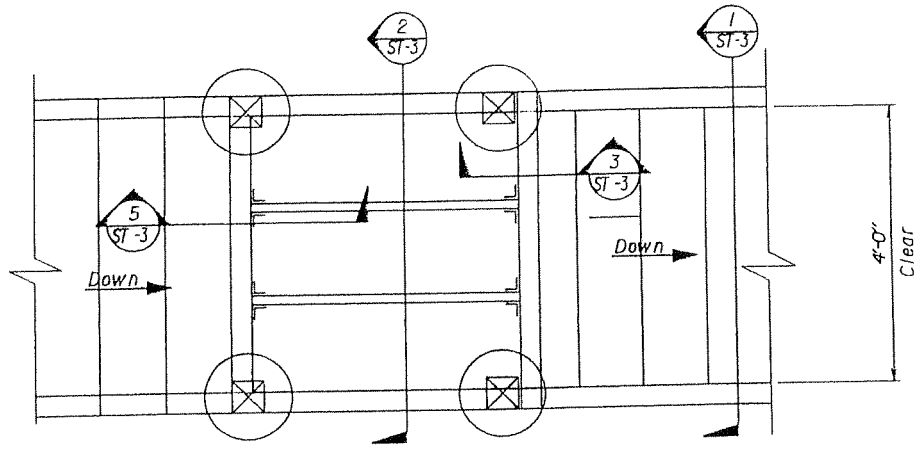

1 PARTIAL PLAN AT LANDING
Scale 3/4" = 1'-0"

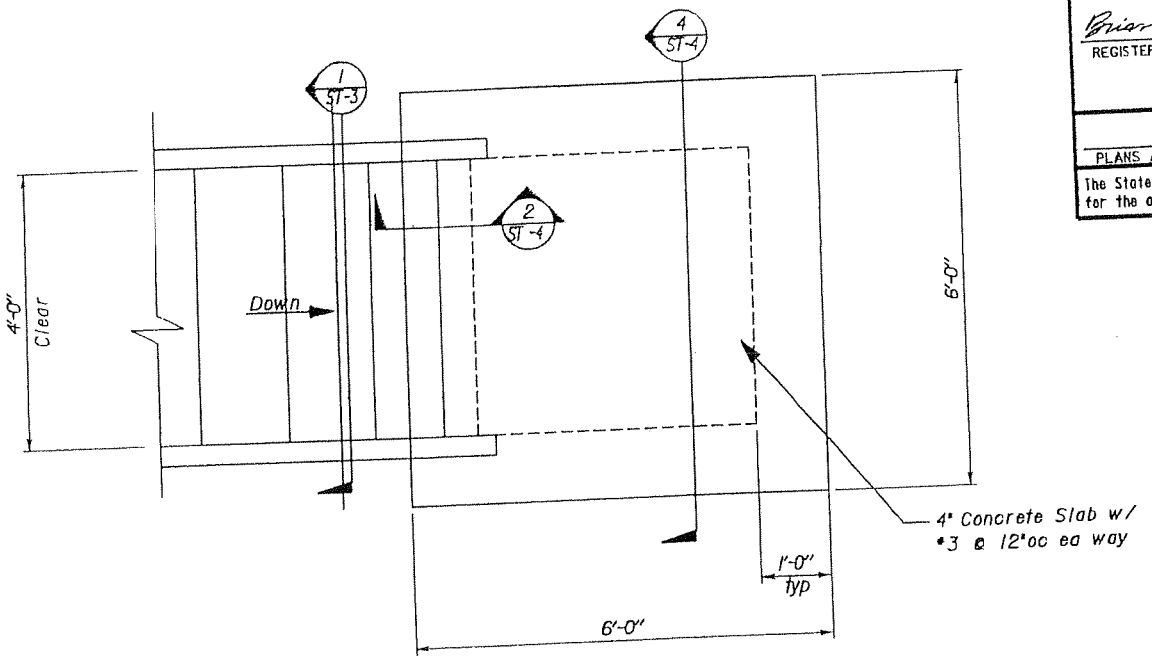

3 PARTIAL PLAN AT LANDING
Scale 3/4" = 1'-0"

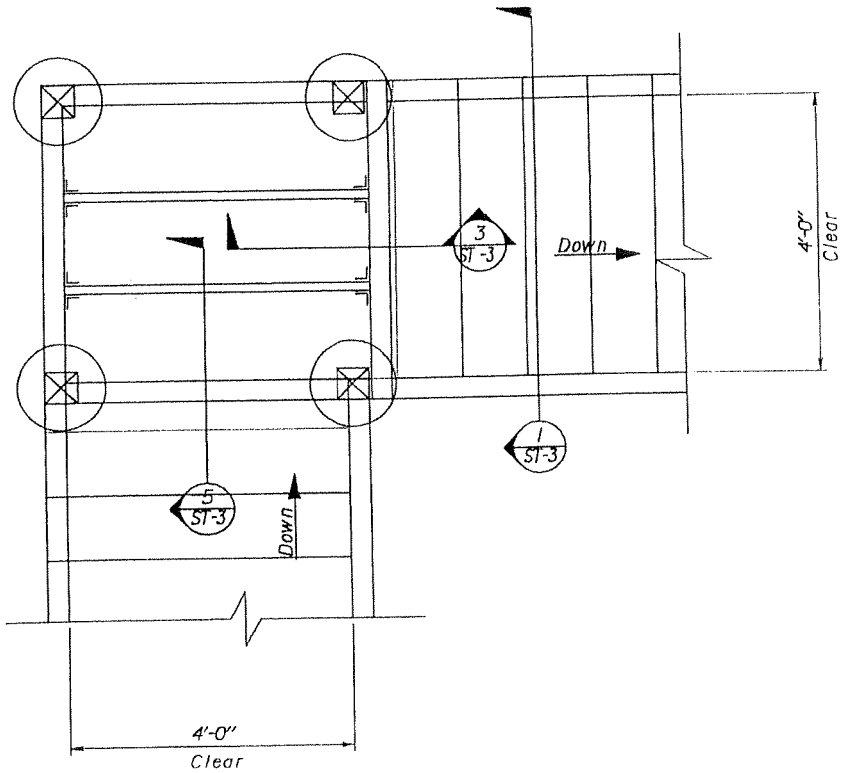

2 PARTIAL PLAN AT LANDING
Scale 3/4" = 1'-0"

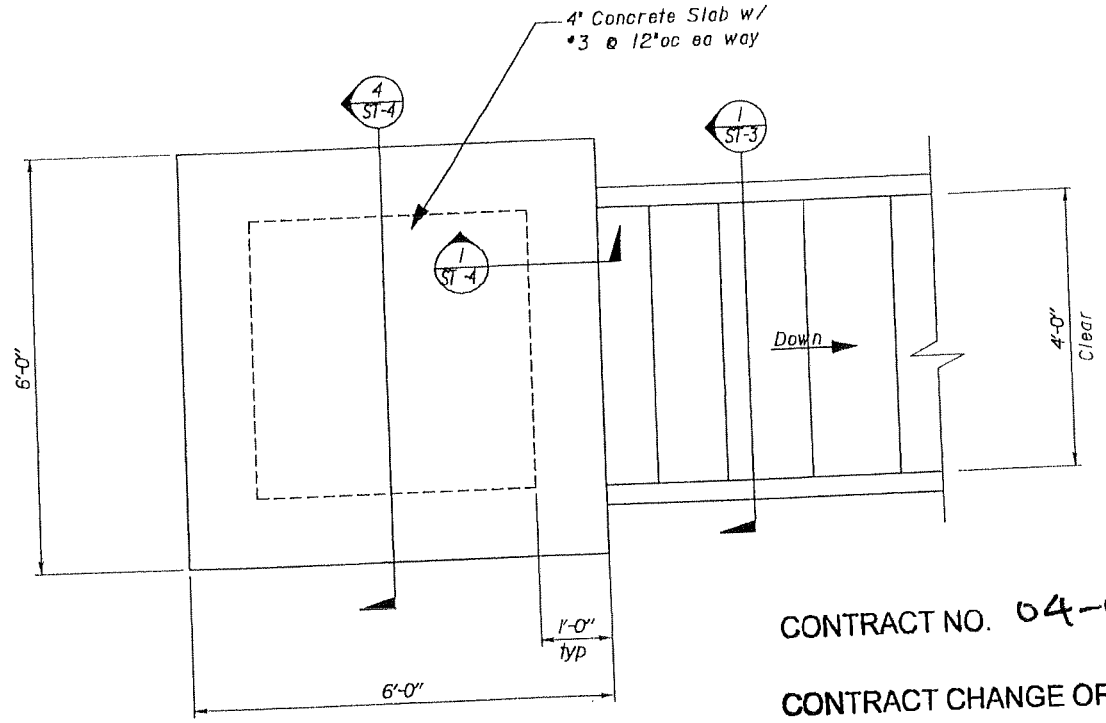

4 PARTIAL PLAN AT LANDING
Scale 3/4" = 1'-0"

CONTRACT NO. 04-0120R4

CONTRACT CHANGE ORDER NO 195

SHEET 5 OF 8

DESIGN	BY	CHECKED	STATE OF CALIFORNIA DEPARTMENT OF TRANSPORTATION	DIVISION OF ENGINEERING SERVICES ARCHITECTURAL AND STRUCTURAL DESIGN	BRIDGE NO.	STAIR ON YERBA BUENA ISLAND	SHEET ST-2
DETAILS	BY	CHECKED			POST MILE 12.6	X X X LANDING PLANS	
QUANTITIES	BY	CHECKED		CU 240	DISREGARD PRINTS BEARING EARLIER REVISION DATES →	REVISION DATES (PRELIMINARY STAGE ONLY) 04-10-09 05-15-09	SHEET OF

19-MAY-2009 13:10

DIST.	COUNTY	ROUTE	POST MILES TOTAL PROJECT	SHEET NO.	TOTAL SHEETS

Brian T. Sutliff - 09
REGISTERED CIVIL ENGINEER — DATE

REGISTERED PROFESSIONAL ENGINEER
Brian T. Sutliff
No. 3862
Exp. 3-31-10
STRUCTURAL
STATE OF CALIFORNIA

PLANS APPROVAL DATE

The State of California or its officers or agents shall not be responsible for the accuracy or completeness of electronic copies of this plan sheet.

CONTRACT NO. 04-0120R4

CONTRACT CHANGE ORDER NO 195

SHEET 6 OF 8

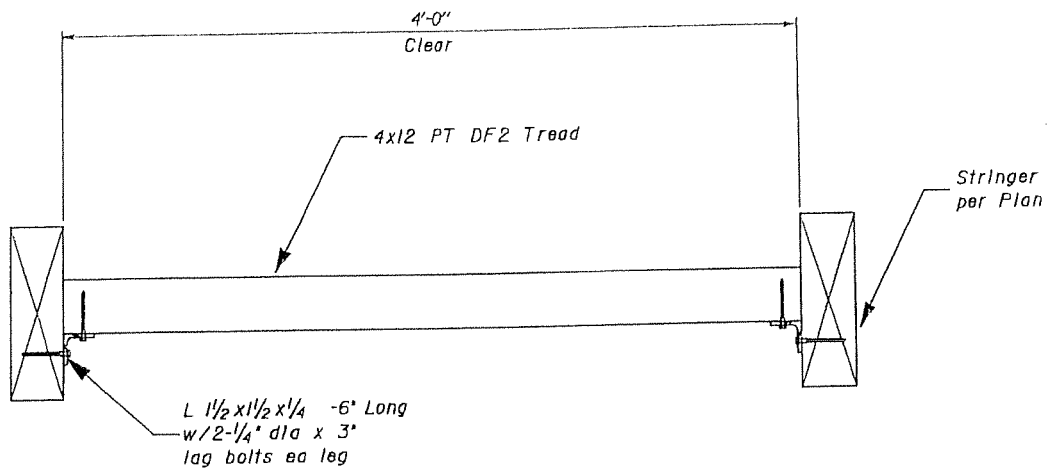

1 SECTION AT STAIR
Scale 2" = 1'-0"

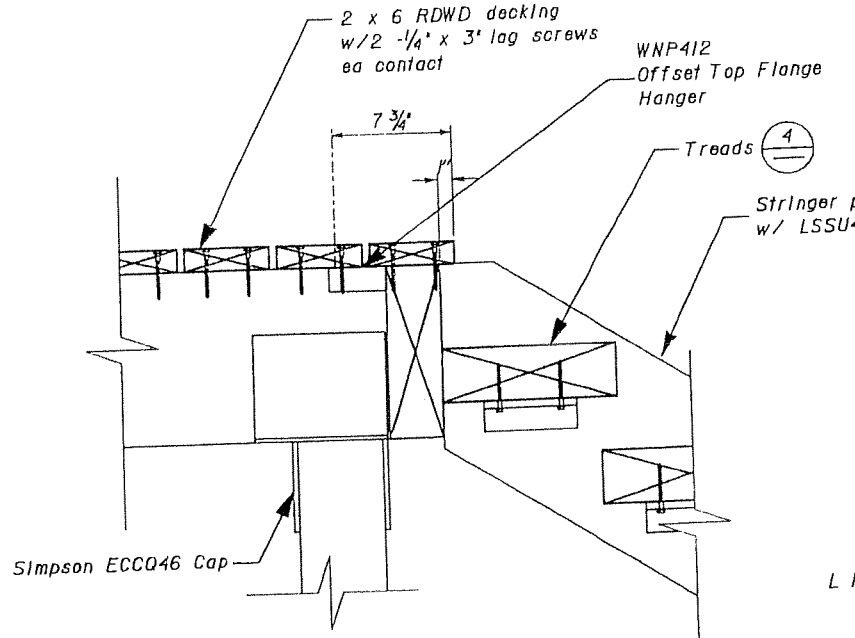

3 STRINGER-BEAM ATTACHMENT
Scale 2" = 1'-0"

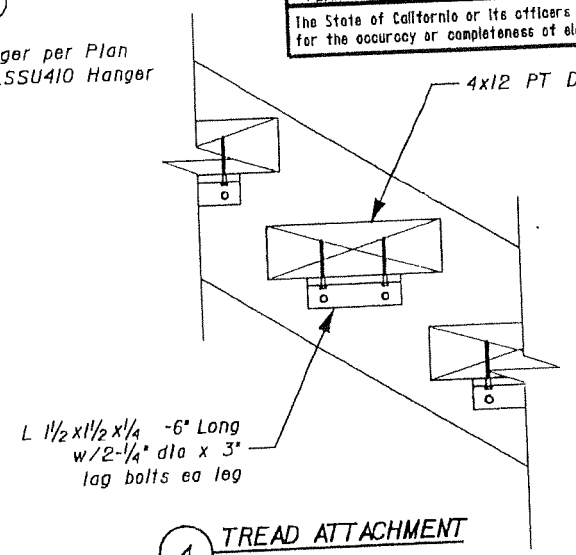

4 TREAD ATTACHMENT

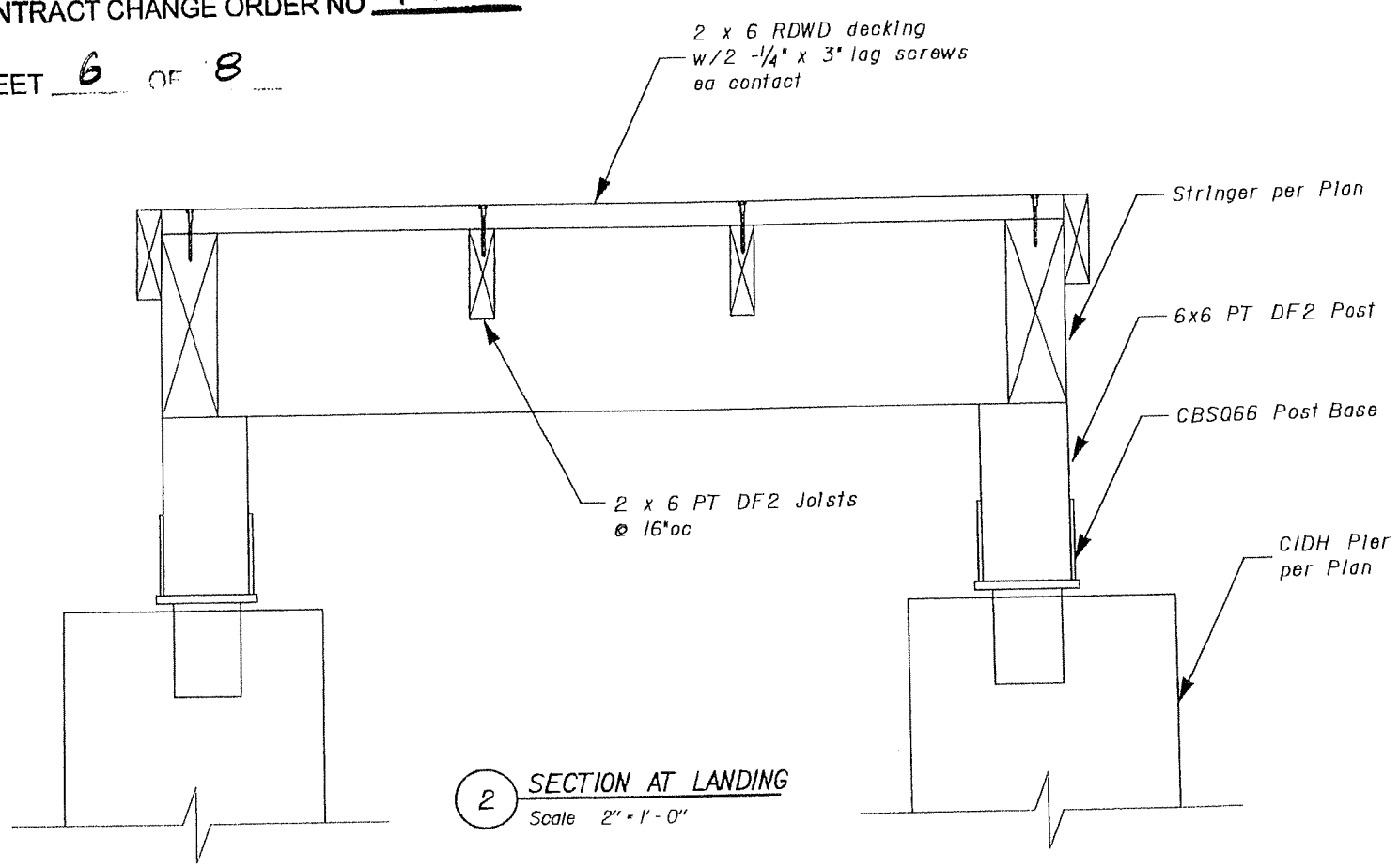

2 SECTION AT LANDING
Scale 2" = 1'-0"

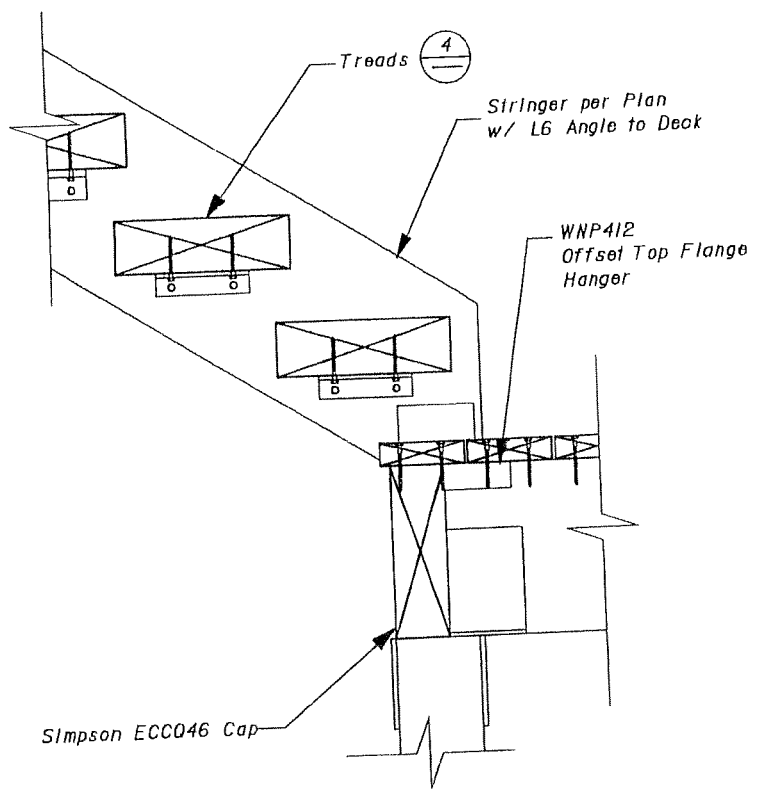

5 STRINGER AT LANDING
Scale 2" = 1'-0"

DESIGN	BY		CHECKED
DETAILS	BY		CHECKED
QUANTITIES	BY		CHECKED

STATE OF CALIFORNIA
DEPARTMENT OF TRANSPORTATION

DIVISION OF ENGINEERING SERVICES
ARCHITECTURAL AND STRUCTURAL DESIGN

CU 240

BRIDGE NO.

POST MILE 12.6

STAIR ON YERBA BUENA ISLAND

X
X
X
DETAILS NO.2

SHEET ST-3

DISREGARD PRINTS BEARING EARLIER REVISION DATES →

REVISION DATES (PRELIMINARY STAGE ONLY) — SHEET OF

04-10-08 05-15-09

13-MAY-2009 15:11

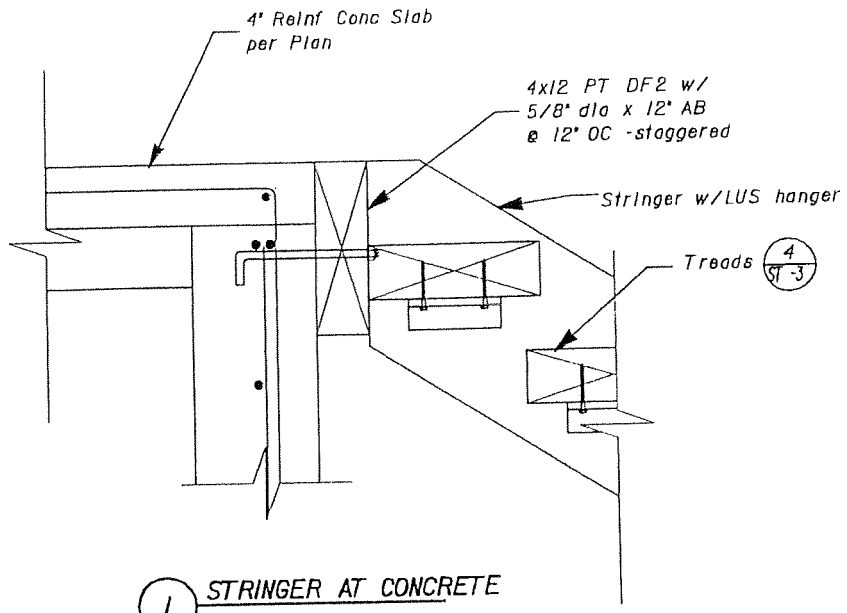

1 STRINGER AT CONCRETE

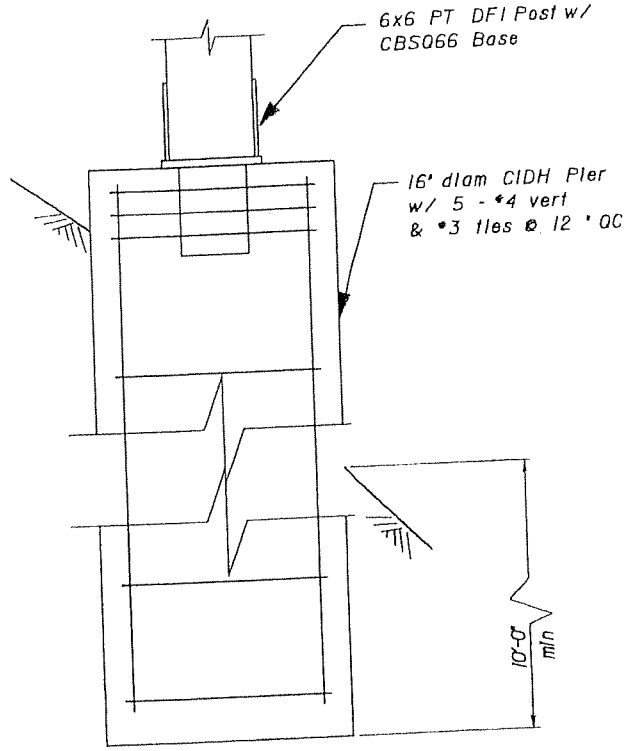

3 CIDH PIER
Scale 2" = 1' - 0"

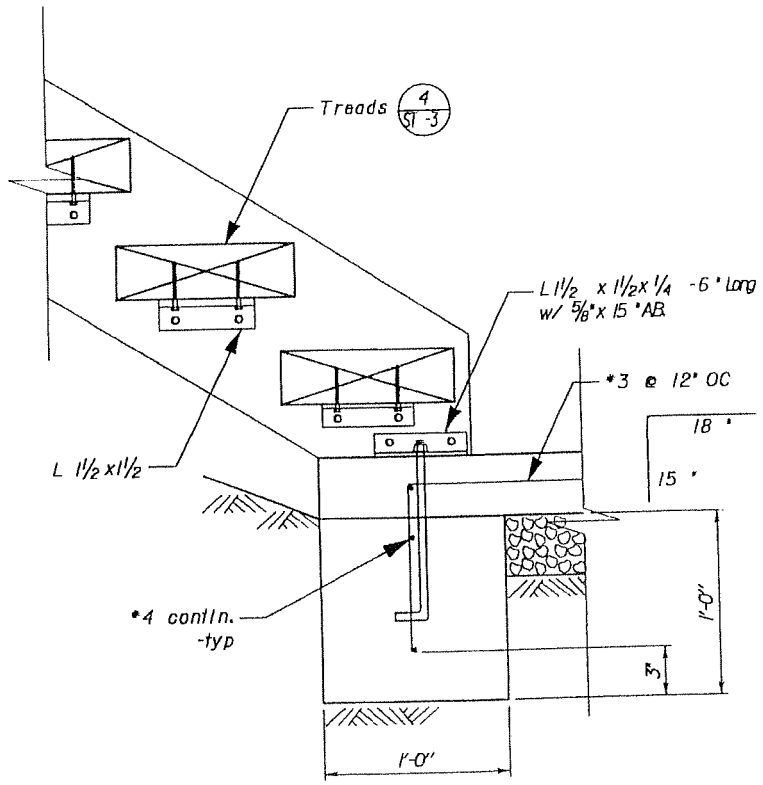

2 STRINGER AT CONCRETE
Scale 2" = 1' - 0"

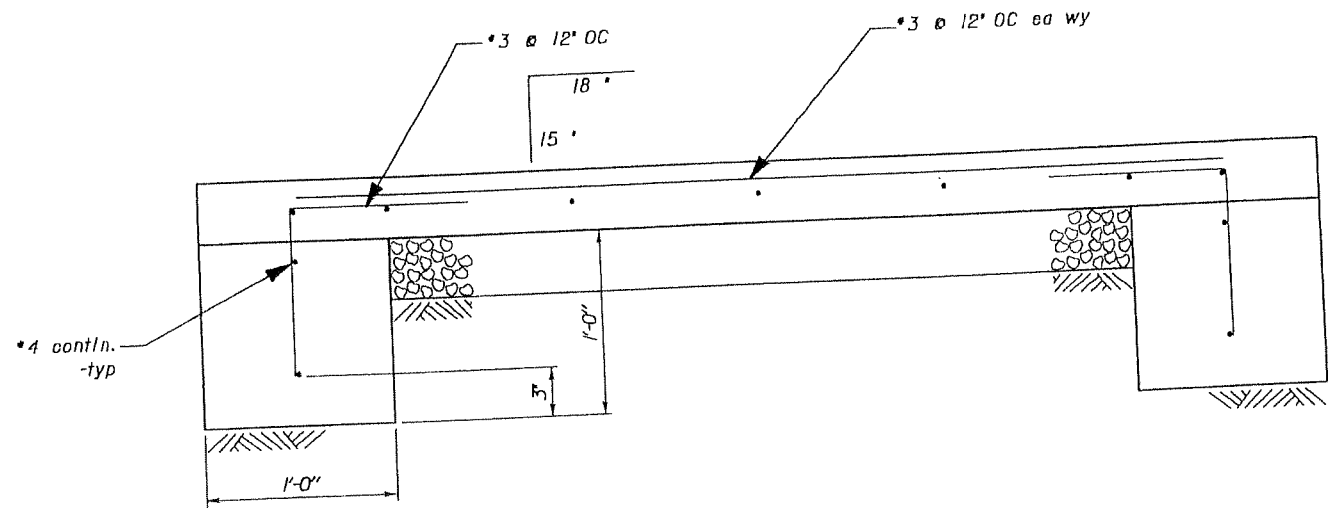

DIST.	COUNTY	ROUTE	POST MILES TOTAL PROJECT	SHEET NO.	TOTAL SHEETS

Brian T. Suttiff - 09
REGISTERED CIVIL ENGINEER DATE

REGISTERED PROFESSIONAL ENGINEER
Brian T. Suttiff
No. 3862
Exp. 3-31-10
STRUCTURAL
STATE OF CALIFORNIA

PLANS APPROVAL DATE

The State of California or its officers or agents shall not be responsible for the accuracy or completeness of electronic copies of this plan sheet.

CONTRACT NO. 04-0120R4

CONTRACT CHANGE ORDER NO 195

SHEET 7 OF 8

DESIGN	BY		CHECKED
DETAILS	BY		CHECKED
QUANTITIES	BY		CHECKED

STATE OF CALIFORNIA
DEPARTMENT OF TRANSPORTATION

DIVISION OF ENGINEERING SERVICES
ARCHITECTURAL AND STRUCTURAL DESIGN

CU 240
EA

BRIDGE NO.
POST MILE 12.6

STAIR ON YERBA BUENA ISLAND

DETAILS NO.3

SHEET ST-4

REVISION DATES (PRELIMINARY STAGE ONLY) | SHEET OF

DISREGARD PRINTS BEARING EARLIER REVISION DATES → 04-10-09 15-09

19-MAY-2009 13:12

DIST.	COUNTY	ROUTE	POST MILES TOTAL PROJECT	SHEET NO.	TOTAL SHEETS

Brian T. Sutliff — 09
REGISTERED CIVIL ENGINEER — DATE

REGISTERED PROFESSIONAL ENGINEER
Brian T. Sutliff
No. 3862
Exp. 3-31-10
STRUCTURAL
STATE OF CALIFORNIA

PLANS APPROVAL DATE

The State of California or its officers or agents shall not be responsible for the accuracy or completeness of electronic copies of this plan sheet.

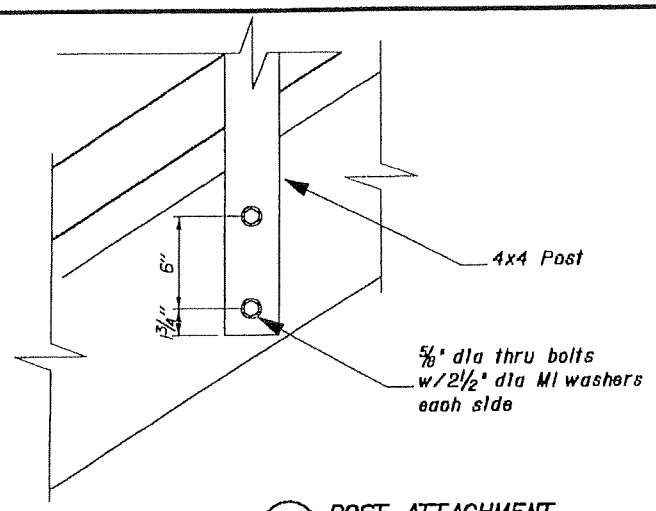

2 POST ATTACHMENT
Scale 2" = 1'-0"

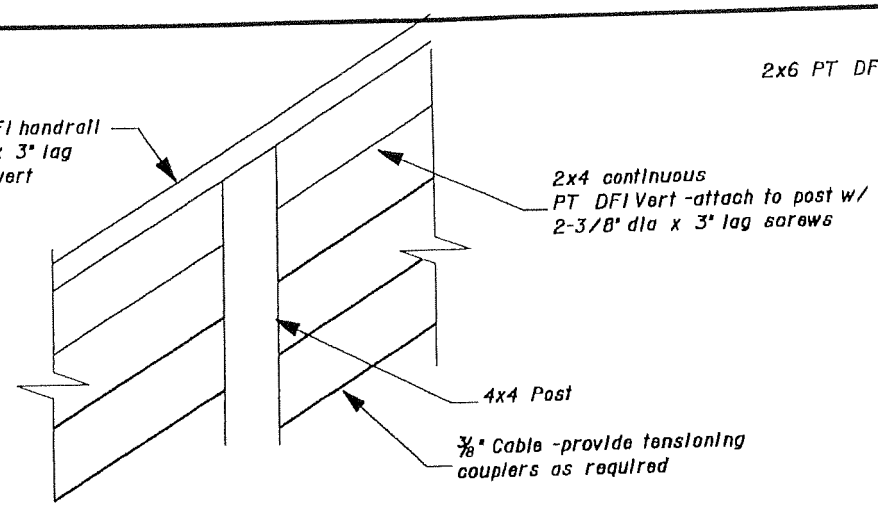

3 HANDRAIL TO POST
Scale 2" = 1'-0"

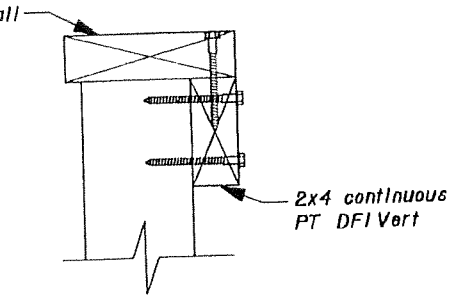

6 HANDRAIL TO POST
Scale 4" = 1'-0"

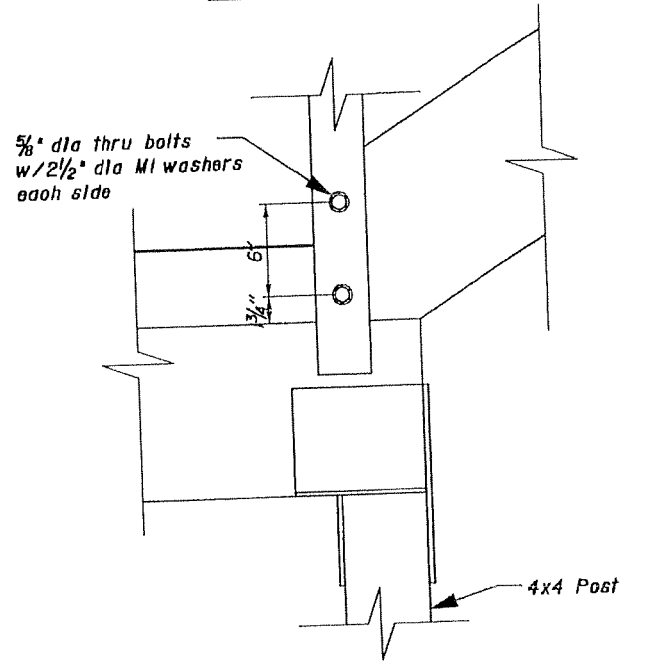

4 POST ATTACHMENT AT LANDING
Scale 2" = 1'-0"

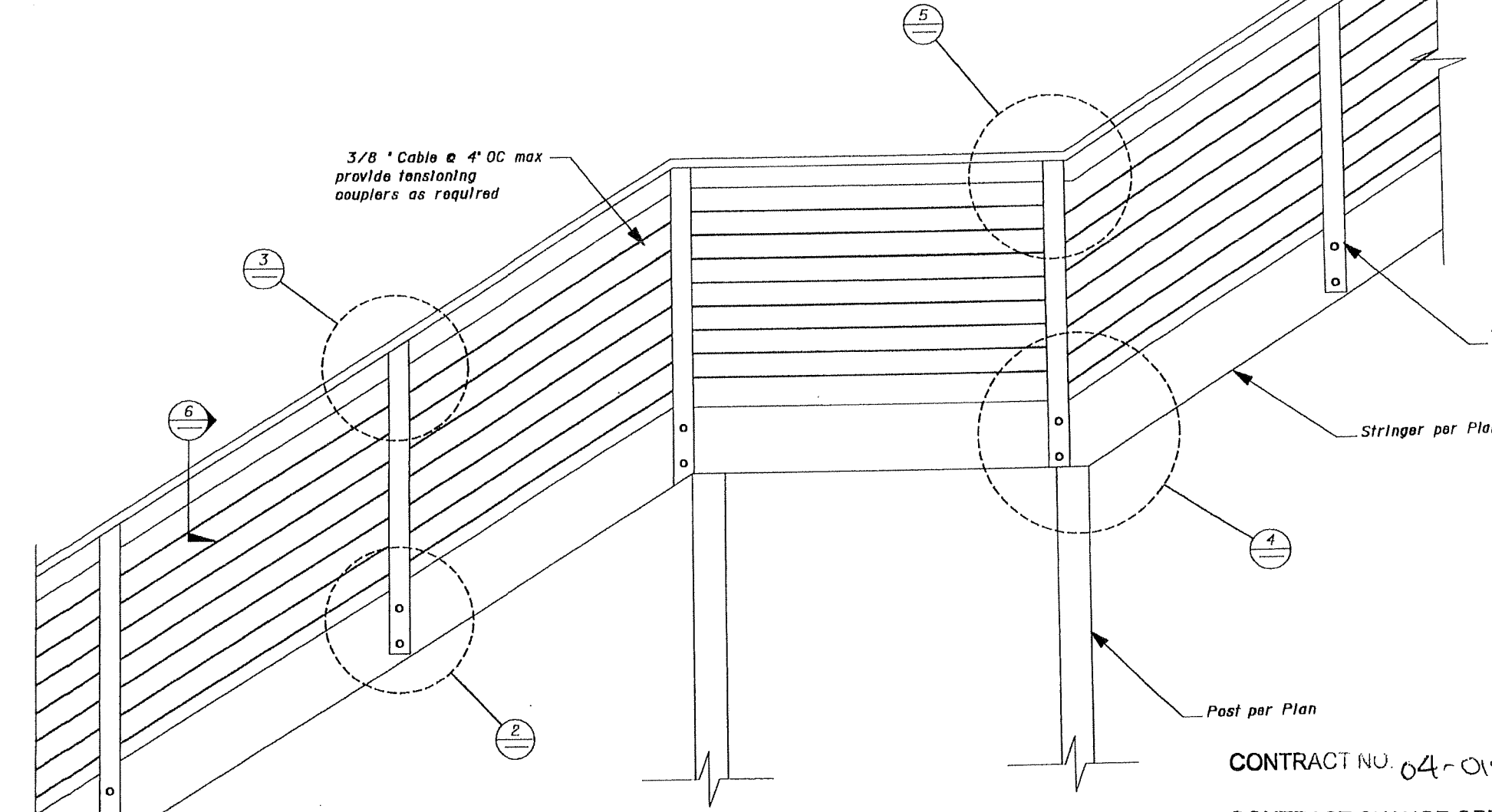

1 TYPICAL HANDRAIL
Scale 1" = 1'-0"

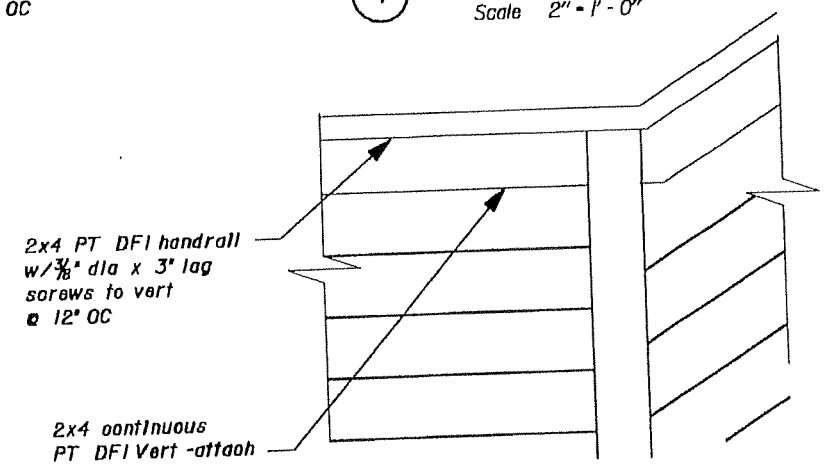

5 HANDRAIL ATTACHMENT AT LANDING
Scale 2" = 1'-0"

CONTRACT NO. 04-0120R4

CONTRACT CHANGE ORDER NO 195

SHEET 8 OF 8

DESIGN	BY	CHECKED	STATE OF CALIFORNIA DEPARTMENT OF TRANSPORTATION	DIVISION OF ENGINEERING SERVICES ARCHITECTURAL AND STRUCTURAL DESIGN	BRIDGE NO.	STAIR ON YERBA BUENA ISLAND	SHEET ST-5
DETAILS	BY	CHECKED			POST MILE 12.6	X X X DETAILS NO.3	
QUANTITIES	BY	CHECKED		CU 240 EA 0120T4	DISREGARD PRINTS BEARING EARLIER REVISION DATES →	REVISION DATES (PRELIMINARY STAGE ONLY) 04-10-09 05-15-09	SHEET OF

ORIGINAL SCALE IN INCHES FOR REDUCED PLANS 0 1 2 3

DOES SD Imperial Rev. 9/02

D:\User\Projects\04_0120P1_YBI Quarter 8 Stairs\Drawings\Structural\ST05.dgn 19-MAY-2009 13:16

STATE OF CALIFORNIA - DEPARTMENT OF TRANSPORTATION

CONTRACT CHANGE ORDER MEMORANDUM

DATE: 7/8/2009

TO: MIKE FORNER / DEANNA VILCHECK	FILE: E.A. 04 - 0120R4
FROM: BILL CASEY	CO-RTE-PM SF-80-12.6/13.2
	FED. NO. ACBRIM-080-1(097)N
CCO#: 195 SUPPLEMENT#: 0 Category Code: CHAB	CONTINGENCY BALANCE (incl. this change) $33,455,101.59
COST: $500,000.00 INCREASE ☑ DECREASE ☐	HEADQUARTERS APPROVAL REQUIRED? ☑ YES ☐ NO
SUPPLEMENTAL FUNDS PROVIDED: $0.00	IS THIS REQUEST IN ACCORDANCE WITH ENVIRONMENTAL DOCUMENTS? ☑ YES ☐ NO
CCO DESCRIPTION: USCG Stairway @ WTI	**PROJECT DESCRIPTION:** CONSTRUCT ROUTE 80 TEMP BYPASS STRUCTURE

Original Contract Time:	Time Adj. This Change:	Previously Approved CCO Time Adjustments:	Percentage Time Adjusted: (including this change)	Total # of Unreconciled Deferred Time CCO(s): (including this change)
475 Day(s)	0 Day(s)	1195 Day(s)	252 %	7

THIS CHANGE ORDER PROVIDES FOR:

the construction of a pedestrian stairway for the adjacent United States Coast Guard (USCG) base in order to mitigate access constraints incurred over construction activities of this project.

This project, the Yerba Buena Island Detour (YBID), was awarded in March 2004 to construct a detour that will allow for the tie in of the new east span of the San Francisco Oakland Bay Bridge to Yerba Buena Island. The YBID encompasses three main structures, the East Tie-In to the existing bridge, the West Tie-In (WTI) to Yerba Buena Island, and the Viaduct structure between the two tie ins.

Two separate Department strategy memorandums issued on December 14, 2006 entitled 'Strategy for South-South Detour Contract Completion' and December 25, 2006 entitled 'Recommendation to Construct Select Yerba Buena Island Transition Structure Foundations by Contract Change Order' were approved by Tony Anziano - Toll Bridge Program Manager, Richard Land - Chief Engineer, and the Toll Bridge Program Oversight Committee (TBPOC), which recommended the design of the ETI and WTI structures and enhancement of the Viaduct be assumed by the Department as opposed to the as-bid performance based contractor design and that a portion of the YBITS foundation work be performed under this contract by change order.

The construction of the YBID spans directly over Macalla Road which provides sole access to the main USCG base located on Yerba Buena Island. At the time of the contract award, the project was anticipated to be completed by the summer of 2005. Due to considerable Department-ordered changes to the contract, the project is currently expected to be completed by December of 2010. This extension has had considerable adverse effects on access to the USCG base.

In an effort to mitigate the Department access constraints brought about by the extended contract duration, Project Development in conjunction with the Division of Right of Way has requested the construction of a stairway that will provide pedestrian access from the main USCG base to the USCG quarters. These quarters are located on top of a steep hillside approximately 40 meters above the main base with the stairway being constructed directly adjacent to the WTI structure.

The stairway spans approximately 82 meters in length and includes the construction of 49 each 16-inch CIDH piles spanning the entire 40 meter high slope, along with pressure treated timber posts, stringers, joists and decking with hand railing and appurtenances.

Compensation shall be paid as extra work at force account at an estimated cost of $500,000.00 which shall be financed from the contract's contingency funds. A cost estimate is on file.

No adjustment of contract time is warranted as the change will not affect the controlling operation.

This change was requested by Alec Melkonians - Asst. Project Manager per memorandum dated June 26, 2009 and concurred with by Hong Wong - Project Engineer.

Maintenance concurrence is not required as the stairway is a temporary structure that will be maintained by the on going construction contract.

ADA Notice: For individuals with sensory disabilities, this document is available in alternate formats. For information call: (916) 654-6410 or TDD (916) 654-3880 or write Records and Forms Management, 1120 N Street, MS-89, Sacramento, CA 95814.

RECEIVED
SEP 28 09
01105

CONCURRED BY:		
Construction Engineer:	Jeannie Balderramos	Date 7-27-09
Bridge Engineer:		Date
Project Engineer:	Hong Wong, PE	Date 7/21/09
Project Manager:	Alec Melkonians	Date 6/26/09
FHWA Rep.:		Date
Environmental:		Date
Other (specify):		Date
Other (specify):		Date
District Prior Approval By:		Date
HQ (Issue .Approve) By:	Bob Molera, HQ CCO Engineer	Date 7-31-09
Resident Engineer's Signature:		Date
		7-27-09

ESTIMATE OF COST

	THIS REQUEST	TOTAL TO DATE
ITEMS	$0.00	$0.00
FORCE ACCOUNT	$500,000.00	$500,000.00
AGREED PRICE	$0.00	$0.00
ADJUSTMENT	$0.00	$0.00
TOTAL	$500,000.00	$500,000.00

FEDERAL PARTICIPATION

☐ PARTICIPATING ☐ PARTICIPATING IN PART ☑ NONE
☐ NON-PARTICIPATING (MAINTENANCE) ☐ NON-PARTICIPATING

FEDERAL SEGREGATION (if more than one Funding Source or P.I.P. type)
☐ CCO FUNDED PER CONTRACT ☐ CCO FUNDED AS FOLLOWS

FEDERAL FUNDING SOURCE PERCENT

ADA Notice: For individuals with sensory disabilities, this document is available in alternate formats. For information call: (916) 654-6410 or TDD (916) 654-3880 or write Records and Forms Management, 1120 N Street, MS-89, Sacramento, CA 95814.

STATE OF CALIFORNIA - DEPARTMENT OF TRANSPORTATION

CONTRACT CHANGE ORDER

Change Requested by: Engineer

CCO: 195	Suppl. No. 1	Contract No. 04 - 0120R4	Road SF-80-12.6/13.2	FED. AID LOC.:

To: CC MYERS INC

You are directed to make the following changes from the plans and specifications or do the following described work not included in the plans and specifications for this contract. ***NOTE: This change order is not effective until approved by the Engineer.***

Description of work to be done, estimate of quantities and prices to be paid. (Segregate between additional work at contract price, agreed price and force account.) Unless otherwise stated, rates for rental of equipment cover only such time as equipment is actually used and no allowance will be made for idle time. This last percentage shown is the net accumulated increase or decrease from the original quantity in the Engineer's Estimate.

Extra Work at Force Account:

Provide additional funds for the construction of the stairway, including CIDH piers, concrete landings, timber posts, stringers, joists, decking, handrails, and all appurtenances as shown on Sheets No. 2 through 7 of the original Change Order No. 195 and as authorized by the Engineer.

Estimated cost of Extra Work at Force Account $450,000.00

Estimated Cost: Increase ☑ Decrease ☐ **$450,000.00**

By reason of this order the time of completion will be adjusted as follows: 0 days

Submitted by		
Signature	**Resident Engineer** BILL CASEY	**Date** 3-3-10
Approval Recommended by		
Signature Deanna Vilcheck	**Area Construction Manager** DEANNA VILCHECK	**Date** 3/3/10
Engineer Approval by		
Signature Deanna Vilcheck	**Area Construction Manager** DEANNA VILCHECK	**Date** 3/22/10

We the undersigned contractor, have given careful consideration to the change proposed and agree, if this proposal is approved, that we will provide all equipment, furnish the materials, except as may otherwise be noted above, and perform all services necessary for the work above specified, and will accept as full payment therefor the prices shown above.

NOTE: If you, the contractor, do not sign acceptance of this order, your attention is directed to the requirements of the specifications as to proceeding with the ordered work and filing a written protest within the time therein specified.

Contractor Acceptance by		
Signature	**(Print name and title)** DANIEL E. HIMICK, PRESIDENT	**Date** 3/18/10

STATE OF CALIFORNIA - DEPARTMENT OF TRANSPORTATION

CONTRACT CHANGE ORDER MEMORANDUM

DATE: 2/16/2010 Page 1 of 2

TO: MIKE FORNER / DEANNA VILCHECK	FILE: E.A. 04 - 0120R4
	CO-RTE-PM SF-80-12.6/13.2
FROM: BILL CASEY	FED. NO.
CCO#: **195** SUPPLEMENT#: **1** Category Code: **CHAB**	CONTINGENCY BALANCE (incl. this change) **$40,614,404.59**
COST: **$450,000.00** INCREASE ☑ DECREASE ☐	HEADQUARTERS APPROVAL REQUIRED? ☑ YES ☐ NO
SUPPLEMENTAL FUNDS PROVIDED: **$0.00**	IS THIS REQUEST IN ACCORDANCE WITH ENVIRONMENTAL DOCUMENTS? ☑ YES ☐ NO
CCO DESCRIPTION: USCG Stairway @ WTI	**PROJECT DESCRIPTION:** CONSTRUCT ROUTE 80 TEMP BYPASS STRUCTURE

Original Contract Time:	Time Adj. This Change:	Previously Approved CCO Time Adjustments:	Percentage Time Adjusted: (including this change)	Total # of Unreconciled Deferred Time CCO(s): (including this change)
475 Day(s)	**0** Day(s)	**1660** Day(s)	**349** %	**0**

THIS CHANGE ORDER PROVIDES FOR:
Additional funds for the work specified under the original change order.

This project, the Yerba Buena Island Detour (YBID), was awarded in March 2004 to construct a detour that will allow for the tie in of the new east span of the San Francisco Oakland Bay Bridge to Yerba Buena Island. The YBID encompasses three main structures, the East Tie-In to the existing bridge, the West Tie-In (WTI) to Yerba Buena Island, and the Viaduct structure between the two tie ins.

Two separate Department strategy memorandums issued on December 14, 2006 entitled 'Strategy for South-South Detour Contract Completion' and December 25, 2006 entitled 'Recommendation to Construct Select Yerba Buena Island Transition Structure Foundations by Contract Change Order' were approved by Tony Anziano - Toll Bridge Program Manager, Richard Land - Chief Engineer, and the Toll Bridge Program Oversight Committee (TBPOC), which recommended the design of the ETI and WTI structures and enhancement of the Viaduct be assumed by the Department as opposed to the as-bid performance based contractor design and that a portion of the YBITS foundation work be performed under this contract by change order.

The original Change Order No. 195 provided for the construction of a stairway spanning approximately 82 meters in length including the construction of 49 each 16-inch CIDH piles spanning the entire 40 meter high slope, along with pressure treated timber posts, stringers, joists and decking with hand railing and appurtenances.

The construction of the stairway, particularly the construction of the drilled CIDH piles, has proven to be more difficult than anticipated due to the difficult work conditions of working on an uneven hillside at an approximate 1 to 1 slope. Based on these conditions, it is now anticipated that additional force account funding shall be required.

Compensation shall be paid as extra work at force account at an estimated cost of $450,000.00 which shall be financed from the contract's contingency funds. A cost estimate is on file.

No adjustment of contract time is warranted as the change will not affect the controlling operation.

This change was concurred with by Ken Terpstra - Project Manager and Jaime Gutierrez - Project Engineer

Maintenance concurrence is not required as the stairway is a temporary structure that will be maintained by the on going construction contract.

ADA Notice: For individuals with sensory disabilities, this document is available in alternate formats. For information call: (916) 654-6410 or TDD (916) 654-3880 or write Records and Forms Management, 1120 N Street, MS-89, Sacramento, CA 95814.

CONCURRED BY:		
Construction Engineer:	Bill Casey, Resident Engineer	Date 2/26/10
Bridge Engineer:		Date
Project Engineer:	~~Minh B. Nguyen, PE~~ JAIME GUTIERREZ	Date 04/01/10
Project Manager:	~~Alec Melkonians~~ KEN TELFER	Date 4/8/10
FHWA Rep.:		Date
Environmental:		Date
Other (specify):	Jeannie Balderramos, SR/TE	Date 2/19/10
Other (specify):		Date
District Prior Approval By:		Date
HQ (Issue Approve) By:	Larry Salhaney, HQ CCO Engine	Date 3/3/10
Resident Engineer's Signature:		Date 2/26/10

ESTIMATE OF COST

	THIS REQUEST	TOTAL TO DATE
ITEMS	$0.00	$0.00
FORCE ACCOUNT	$450,000.00	$950,000.00
AGREED PRICE	$0.00	$0.00
ADJUSTMENT	$0.00	$0.00
TOTAL	$450,000.00	$950,000.00

FEDERAL PARTICIPATION

☐ PARTICIPATING ☐ PARTICIPATING IN PART ☑ NONE
☐ NON-PARTICIPATING (MAINTENANCE) ☐ NON-PARTICIPATING

FEDERAL SEGREGATION (if more than one Funding Source or P.I.P. type)
☐ CCO FUNDED PER CONTRACT ☐ CCO FUNDED AS FOLLOWS

FEDERAL FUNDING SOURCE	PERCENT

ADA Notice: For individuals with sensory disabilities, this document is available in alternate formats. For information call: (916) 654-6410 or TDD (916) 654-3880 or write Records and Forms Management, 1120 N Street, MS-89, Sacramento, CA 95814.

ATE OF CALIFORNIA - DEPARTMENT OF TRANSPORTATION

ONTRACT CHANGE ORDER

Change Requested by: Engineer

O: 195	Suppl. No. 2	Contract No. 04 - 0120R4	Road SF-80-12.6/13.2	FED. AID LOC.:

: CC MYERS INC

u are directed to make the following changes from the plans and specifications or do the following described work not included in the plans and ecifications for this contract. ***NOTE: This change order is not effective until approved by the Engineer.***

scription of work to be done, estimate of quantities and prices to be paid. (Segregate between additional work at contract price, agreed price and ce account.) Unless otherwise stated, rates for rental of equipment cover only such time as equipment is actually used and no allowance will be ide for idle time. This last percentage shown is the net accumulated increase or decrease from the original quantity in the Engineer's Estimate.

tra Work at Force Account:

Provide additional funds for the work specified to be performed at force account under the original Change Order No. 195 and as determined by the Engineer.

Estimated cost of Extra Work at Force Account $35,000.00

Estimated Cost: Increase ☑ Decrease ☐ **$35,000.00**

reason of this order the time of completion will be adjusted as follows: 0 days

Recommended by		
gnature J Balderrama	**Resident Engineer** JEANNIE BALDERRAMOS	**Date** 9-30-10
Recommended by		
gnature Michael Fraser	**Area Construction Manager** for DEANNA VILCHECK	**Date** 10-1-10
Approved by		
gnature Deanna Vilcheck	**Area Construction Manager** DEANNA VILCHECK	**Date** 10/7/10

e the undersigned contractor, have given careful consideration to the change proposed and agree, if this proposal is approved, that we will provide all uipment, furnish the materials, except as may otherwise be noted above. and perform all services necessary for the work above specified, and will accept full payment therefor the prices shown above.

OTE: If you, the contractor, do not sign acceptance of this order, your attention is directed to the requirements of the specifications as to oceeding with the ordered work and filing a written protest within the time therein specified.

ntractor Acceptance by		
gnature NOT REQUIRED	**(Print name and title)**	**Date**

CONTRACT CHANGE ORDER

Change Requested by: Engineer

CCO 196	Suppl. No. 0	Contract No. 04 - 0120R4	Road SF-80-12.6/13.2	FED. AID LOC.: ACBRIM-080-1(097)N

To: **CC MYERS INC**

You are directed to make the following changes from the plans and specifications or do the following described work not included in the plans and specifications for this contract. ***NOTE: This change order is not effective until approved by the Engineer.***

Description of work to be done, estimate of quantities and prices to be paid. (Segregate between additional work at contract price, agreed price and force account.) Unless otherwise stated, rates for rental of equipment cover only such time as equipment is actually used and no allowance will be made for idle time. This last percentage shown is the net accumulated increase or decrease from the original quantity in the Engineer's Estimate.

Extra Work at Lump Sum:

As authorized by the Engineer and as shown on Sheets 2 to 12 of this change order, furnish and install soffit lighting in the lower deck of the Temporary Bypass Structure.

For this work, the Contractor will be paid the sum of $ 59,906.00, which constitutes full compensation, including markups and incidentals, for the work of this change.

Total Cost of Extra Work at Lump Sum $59,906.00

Estimated Cost: Increase ☑ Decrease ☐ **$59,906.00**

By reason of this order the time of completion will be adjusted as follows: 0 days

Submitted by		
Signature	Resident Engineer BILL CASEY	Date 6-25-09
Approval Recommended by		
Signature Deanna Vilcheck	Area Construction Manager DEANNA VILCHECK	Date 6/29/09
Engineer Approval by		
Signature Deanna Vilcheck	Area Construction Manager DEANNA VILCHECK	Date 7/28/09

We the undersigned contractor, have given careful consideration to the change proposed and agree, if this proposal is approved, that we will provide all equipment, furnish the materials, except as may otherwise be noted above, and perform all services necessary for the work above specified, and will accept as full payment therefor the prices shown above.

NOTE: If you, the contractor, do not sign acceptance of this order, your attention is directed to the requirements of the specifications as to proceeding with the ordered work and filing a written protest within the time therein specified.

Contractor Acceptance by		
Signature	(Print name and title) DANIEL E. HINCK, PRESIDENT	Date 7/24/09

DIST	COUNTY	ROUTE	KILOMETER POST TOTAL PROJECT	SHEET No	TOTAL SHEETS
04	SF	80			

Carol Light — REGISTERED ELECTRICAL ENGINEER — 04/27/09 DATE

REGISTERED PROFESSIONAL ENGINEER — CAROL LIGHT — No. 10145 — Exp.09/30/09 — ELECTRICAL — STATE OF CALIFORNIA

PLANS APPROVAL DATE

PB Americas, Inc.
303 Second St., Suite 700N
San Francisco, CA 94107-1317

SILVERMAN & LIGHT
1201 PARK AVENUE - SUITE 100
EMERYVILLE, CA 94608-3632

The State of California or its officers or agents shall not be responsible for the accuracy or completeness of electronic copies of this plan sheet.

Caltrans now has a web site! To get to the web site, go to http://www.dot.ca.gov

CALCULATED/ DESIGNED BY: BJ — CHECKED BY: CL

DATE	REVISED BY	DATE REVISED

STATE OF CALIFORNIA - DEPARTMENT OF TRANSPORTATION — Caltrans — DESIGN OVERSIGHT

NOTES:

1. Reference:

   -for TB-23E connection diagram, see Sheet E-23.

   -for 600 V cable block diagram, see Sheet E-9.

   -for Roadway lighting mounting, details, see Sheet E-15R4.

(10) Route new armored cables (CKT #241 and #242) along inside face of tunnel wall to (E) 103 mm extension conduits installed from (E) vault 2A.

(11) Install 27C type 4 conduit with 3#12 and 1#12G (CKT #241 & 242). Provide conduit support every 1.5 meter.

(12) Install 21C type 4 conduit with 2#12 and 1#12G (CKT #241). Provide conduit support every 1.5 meter.

Caltrans Metric

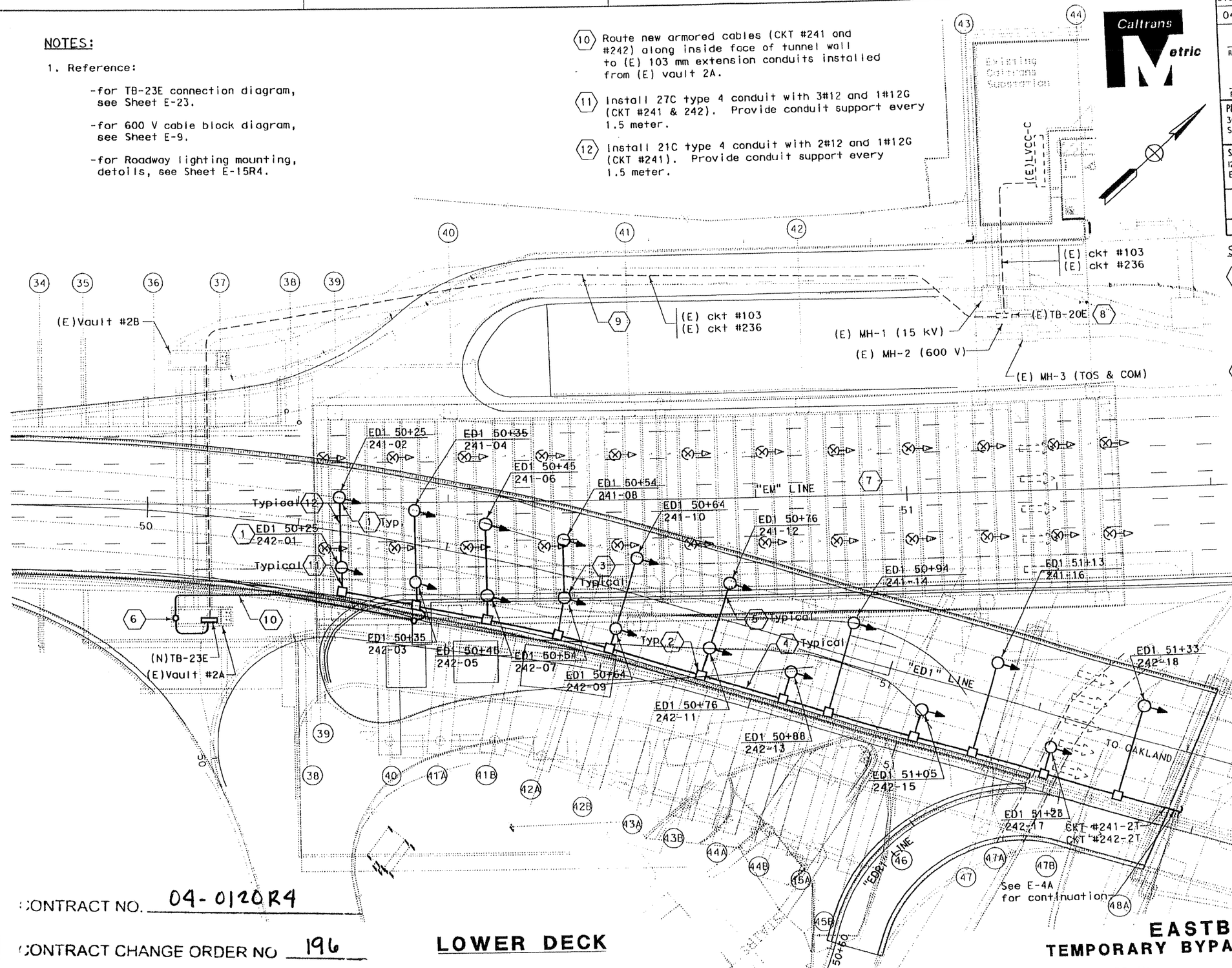

SHEET NOTES:

(1) Install new type III soffit fixture "HOLOPHANE TFP series luminaire" with 175 watts MH, 480 V, double fusing and with provision of special bracket. Mount fixture on concrete structure of westbound deck between bent caps.

(2) Install new NEMA type 4 splice box. Splice box to have a minimum dimension of 305(L) x 305(W) x 152(D). Fasten box on the ceiling with four (4) 10-24 concrete expansion anchors and hex head cap screws. Provide fused splice connectors to each ungrounded conductor.

(3) Locate light fixture 4.0 m from the inside face of barrier unless oterwise indicated.

(4) Install new 41C conduit with 6#6 AWG and 1#8G conductors (CKT #241 and #242). Provide conduit support every 1.5 meter maximum. See detail 1 on Sheet E-18.

(5) Install new 27C type 4 conduit with 3 #12 AWG conductors from splice box to lighting fixture. Provide conduit support every 1.5 meter.

(6) Intercept (E) ckt #241 and ckt #242 in (E) vault #2A and route via (N) TB-23E.

(7) Disconnect (E) soffit lighting fixture between bent #38 thru 48 after new temporary SSD soffit lighting is operational.

(8) (E) TB-20E located in (E) MH-2.

(9) Install 6#6 & 1#8 (Ckt #241 & 242) in (E) 103 conduit and route from (E) TB-20E to (N) TB-23E via (E) vault 2B and vault 2A.

CONTRACT NO. 04-0120R4

CONTRACT CHANGE ORDER NO 196

SHEET 2 OF 12

LOWER DECK

EASTBOUND LIGHTING
TEMPORARY BYPASS STRUCTURE-WEST TIE IN

SCALE: 1:250

ALL DIMENSIONS ARE IN METERS UNLESS OTHERWISE SHOWN

E-4R4

THIS PLAN ACCURATE FOR ELECTRICAL WORK ONLY

FOR REDUCED PLANS ORIGINAL SCALE IS IN MILLIMETERS 0 20 40 60 80

DGN FILE =>WTI2-E04R4.dgn
USERNAME =>bjud

CU 04251 EA 0120R3

DIST	COUNTY	ROUTE	KILOMETER POST TOTAL PROJECT	SHEET No	TOTAL SHEETS
04	SF	80			

Carol Light — REGISTERED ELECTRICAL ENGINEER — 04/27/09 DATE

REGISTERED PROFESSIONAL ENGINEER — CAROL LIGHT — No. 10145 — Exp. 09/30/08 ELECTRICAL — STATE OF CALIFORNIA

PLANS APPROVAL DATE

PB Americas, Inc.
303 Second St., Suite 700N
San Francisco, CA 94107-1317

SILVERMAN & LIGHT
1201 PARK AVENUE - SUITE 100
EMERYVILLE, CA 94608-3632

The State of California or its officers or agents shall not be responsible for the accuracy or completeness of electronic copies of this plan sheet.

Caltrans now has a web site! To get to the web site, go to http://www.dot.ca.gov

Caltrans Metric

NOTES:

1. Contractor shall verify existing installation prior to intercepting and splicing the new armored cables to ensure continuity of the electrical service.
2. Contractor shall provide and install new armored cables and secure them with lag supports no greater than 1.5 meters apart.
3. For New Soffit Lighting Fixture Location and Details, see Sheet E-7R2.
4. Contractor to Provide expansion fittings or loops at bridge expansion joints or points of deflections.

SHEET NOTES:

1. Electrical Contractor to intercept and reconnect existing circuits (ckt 241, 242) to maintain power to existing soffit (flouresecent) light fixtures From Pier E1 to Pier E2. Provide and install Nema 4X Junction Box as needed.
2. Terminate and connect new armored cables in splice box (CKT's #241-2T and #242-2T)
3. Circuits #241-2T and #242-2T conductors from Temporary Bypass Structure. See sheet E-4B drawings for more information.
4. Install new armored cable with 3 #6 & 1 #8G. Secure cable on the existing structure with cable clamps and channel strut.

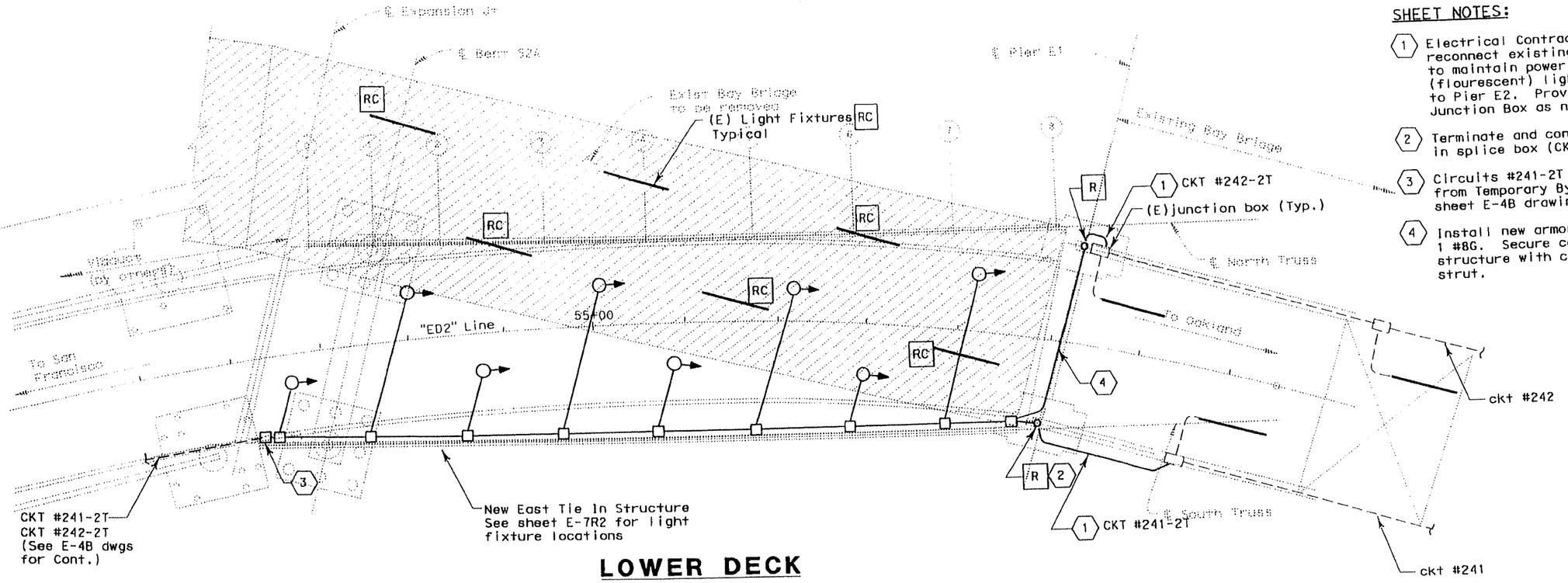

LOWER DECK

CONTRACT NO. 04-0120R4

CONTRACT CHANGE ORDER NO 196

SHEET 3 OF 12

EASTBOUND LIGHTING
TEMPORARY BYPASS STRUCTURE-EAST TIE IN

SCALE: 1:250

E-6R2

ALL DIMENSIONS ARE IN METERS UNLESS OTHERWISE SHOWN

THIS PLAN ACCURATE FOR ELECTRICAL WORK ONLY

FOR REDUCED PLANS ORIGINAL SCALE IS IN MILLIMETERS 0 20 40 60 80

DGN FILE =>ETI-E06R2.dgn

CU 04251 EA 0120R4

DESIGN OVERSIGHT	CALCULATED/ DESIGNED BY	DATE	REVISED BY
HONG WONG	CHECKED BY	CL	DATE REVISED

STATE OF CALIFORNIA - DEPARTMENT OF TRANSPORTATION
Caltrans

CONTRACT NO. 04-0120R4

CONTRACT CHANGE ORDER NO 196

SHEET 4 OF 12

DIST	COUNTY	ROUTE	KILOMETER POST TOTAL PROJECT	SHEET No	TOTAL SHEETS
04	SF	80			

Caltrans Metric

Carol Light 04/27/09
REGISTERED ELECTRICAL ENGINEER DATE

REGISTERED PROFESSIONAL ENGINEER CAROL LIGHT No. 10145 Exp. 09/30/08 ELECTRICAL STATE OF CALIFORNIA

PLANS APPROVAL DATE

PB Americas, Inc.
303 Second St., Suite 700N
San Francisco, CA 94107-1317

SILVERMAN & LIGHT
1201 PARK AVENUE - SUITE 100
EMERYVILLE, CA 94608-3632

The State of California or its officers or agents shall not be responsible for the accuracy or completeness of electronic copies of this plan sheet.

Caltrans now has a web site! To get to the web site, go to http://www.dot.ca.gov

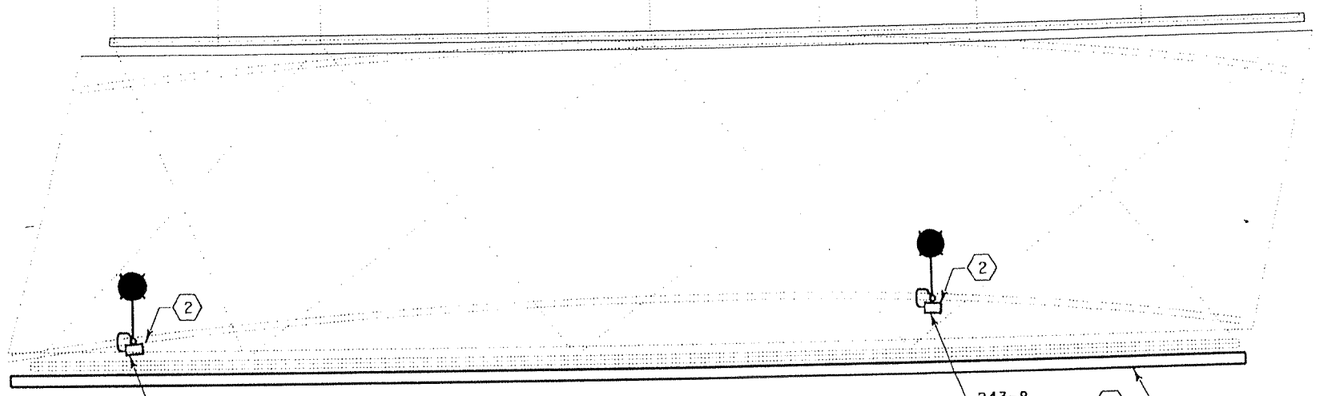

WESTBOUND STRUCTURE (UPPER DECK)

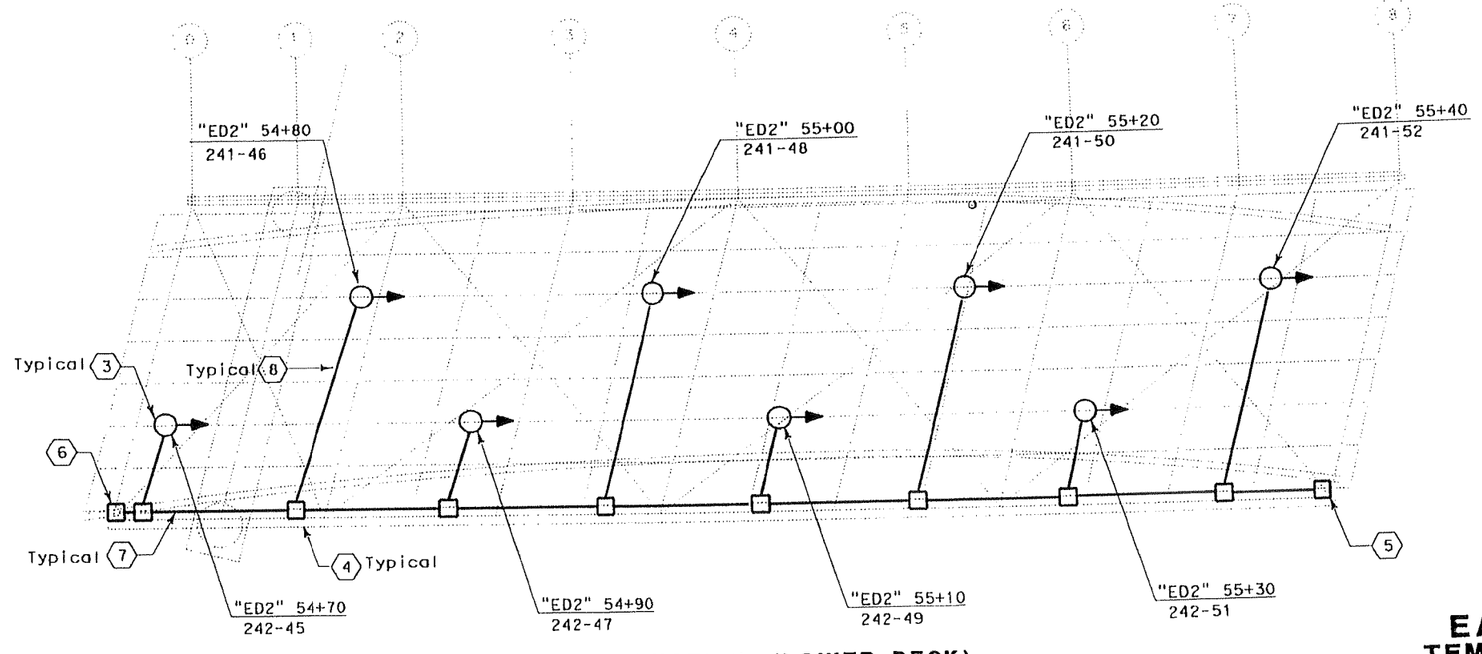

EASTBOUND STRUCTURE (LOWER DECK)

SHEET NOTES:

1. Install new Type 21 light fixture mounted on barrier rails with 400 watts HPS luminaire on 3.7 Meter mounting arm. See Caltrans Standard Plan ES-6A for more detail.
2. Install new Nema Type 4X splice box on the outside face of barrier. Splice box shall have a minimum dimension of 305(L) x 305(W) x 152(D). Secure box on the concrete barrier with four (4) 10-24 concrete expansion anchors and hex head cap screws. Provide fused splice connectors. See Caltrans Standard E-13A and 13-B for splicing details and fuse ratings.
3. Install new Type III soffit fixture "HOLOPHANE TFP series" luminaire with 175 watts, MH, 480 V, double fusing and with provision of special bracket. Secure fixture to steel structure of west bound deck. See detail on E-28 for more information.
4. Install new Nema Type 4X splice box with minimum dimensions of 305(L) x 305(W) x 152(D). Fasten box on the first longitudinal steel member inside south truss. Provide fused splice connectors. See Caltrans Standard E-13A and 13-B for splicing details and fuse ratings.
5. Install new Nema Type 4X splice box with minimum dimensions of 305(L) x 305(W) x 152(D). Fasten box on the steel structure. Provide enough cable length and coil cable in box for reconnection, to power existing East bound luminaires to remain.
6. Install new Nema Type 4X splice box with minimum dimensions of 305(L) x 305(W) x 152(D). Fasten box on the steel structure. Provide enough cable length and coil cable inside box for connection to new East bound soffit fixtures. See TRC dwgs. for more information.
7. Install new 41C, with 6 #6 & 1 #8G (CKTs #241 and #242). Secure conduit to Steel Structure. See Detail on Sheet E-25.
8. Install new 27C, LTFC with 3 #12 & 1 #12G from splice box to Lighting Fixture.

EAST TIE-IN STRUCTURE-LIGHTING
TEMPORARY BYPASS STRUCTURE-EAST TIE IN

SCALE: 1:200

E-7R2

ALL DIMENSIONS ARE IN METERS UNLESS OTHERWISE SHOWN

THIS PLAN ACCURATE FOR ELECTRICAL WORK ONLY

FOR REDUCED PLANS ORIGINAL SCALE IS IN MILLIMETERS 0 20 40 60 80

DGN FILE =>ET1-E07R2.dgn

CU 04251

EA 0120R4

STATE OF CALIFORNIA - DEPARTMENT OF TRANSPORTATION

Caltrans

DESIGN OVERSIGHT: HONG WONG

CALCULATED/DESIGNED BY: BJ DATE

CHECKED BY: CL

REVISED BY

DATE REVISED

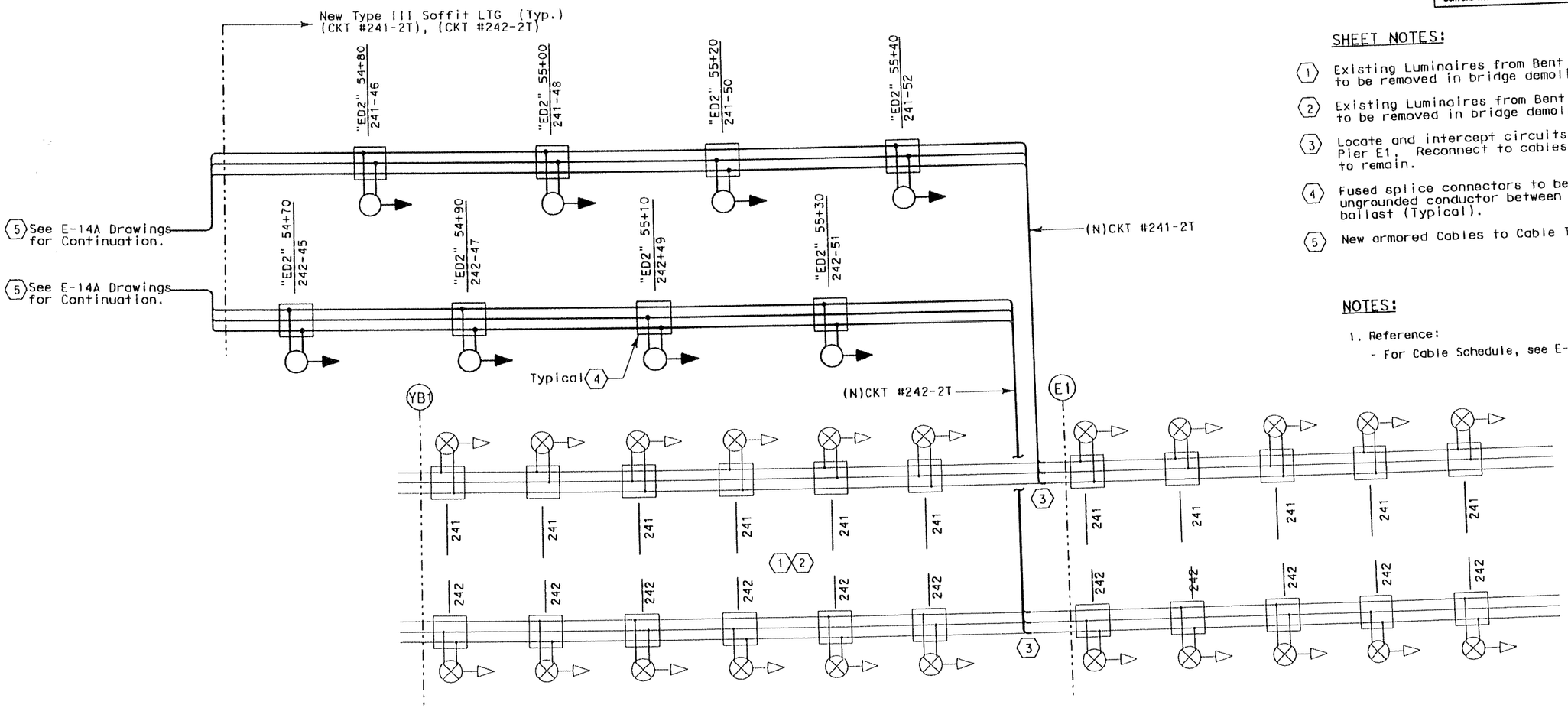

SHEET NOTES:

(1) Existing Luminaires from Bent YB1 through Bent E1 to be removed in bridge demolition (Eastbound North).

(2) Existing Luminaires from Bent YB1 through Bent E1 to be removed in bridge demolition (Eastbound South).

(3) Locate and intercept circuits #241 and #242 at Pier E1. Reconnect to cables supplying luminaires to remain.

(4) Fused splice connectors to be used for each ungrounded conductor between line and ballast (Typical).

(5) New armored Cables to Cable Tray to East Span.

NOTES:

1. Reference:
   - For Cable Schedule, see E-9

DIST	COUNTY	ROUTE	KILOMETER POST TOTAL PROJECT	SHEET NO	SHEETS
04	SF	80			

Caltrans Metric

Carol Light 04/27/09
REGISTERED ELECTRICAL ENGINEER DATE

REGISTERED PROFESSIONAL ENGINEER — CAROL LIGHT — No. 10145 — EXP. 09/30/08 ELECTRICAL — STATE OF CALIFORNIA

PLANS APPROVAL DATE

PB Americas, Inc.
303 Second St., Suite 700N
San Francisco, CA 94107-1317

SILVERMAN & LIGHT
1201 PARK AVENUE - SUITE 100
EMERYVILLE, CA 94608-3632

The State of California or its officers or agents shall not be responsible for the accuracy or completeness of electronic copies of this plan sheet.

Caltrans now has a web site! To get to the web site, go to http://www.dot.ca.gov

DATE	REVISED BY	DATE REVISED
BJ		
CL		

CALCULATED/DESIGNED BY
CHECKED BY

DESIGN OVERSIGHT
HONG WONG

STATE OF CALIFORNIA - DEPARTMENT OF TRANSPORTATION
Caltrans

CONTRACT NO. 04-0120R4

CONTRACT CHANGE ORDER NO 196

SHEET 5 OF 12

DETAILS
EASTBOUND LIGHTING DIAGRAM TEMPORARY BYPASS STRUCTURE-EAST TIE IN
NO SCALE

E-11R2

THIS PLAN ACCURATE FOR ELECTRICAL WORK ONLY

FOR REDUCED PLANS ORIGINAL SCALE IS IN MILLIMETERS 0 20 40 60 80

DGN FILE => ET1-E11R2.dgn
USERNAME => bjud

CU 04251

EA 0120R4

DIST	COUNTY	ROUTE	KILOMETER POST TOTAL PROJECT	SHEET NO	TOTAL SHEETS
04	SF	80			

Carol Light — REGISTERED ELECTRICAL ENGINEER — 04/27/08 DATE

PLANS APPROVAL DATE

REGISTERED PROFESSIONAL ENGINEER — CAROL LIGHT — No. 10145 — Exp. 09/30/09 — ELECTRICAL — STATE OF CALIFORNIA

PB Americas, Inc.
303 Second St., Suite 700N
San Francisco, CA 94107-1317

SILVERMAN & LIGHT
1201 PARK AVENUE - SUITE 100
EMERYVILLE, CA 94608-3632

The State of California or its officers or agents shall not be responsible for the accuracy or completeness of electronic copies of this plan sheet.

Caltrans now has a web site! To get to the web site, go to http://www.dot.ca.gov

Caltrans Metric

NOTES:

1. Reference:
   - For Cable Schedule, see E-8

SHEET NOTES:

(1) Intercept circuits #241-2T, and CKT#242 in MH-2. Route on bypass structure via (E) vault #2A and reconnect to cables supplying luminaires to remain.

(2) Fused splice connectors to be used for eoch ungrounded conductors between line and ballast (Typical).

(3) New armored Cables to Cable Tray to East Span.

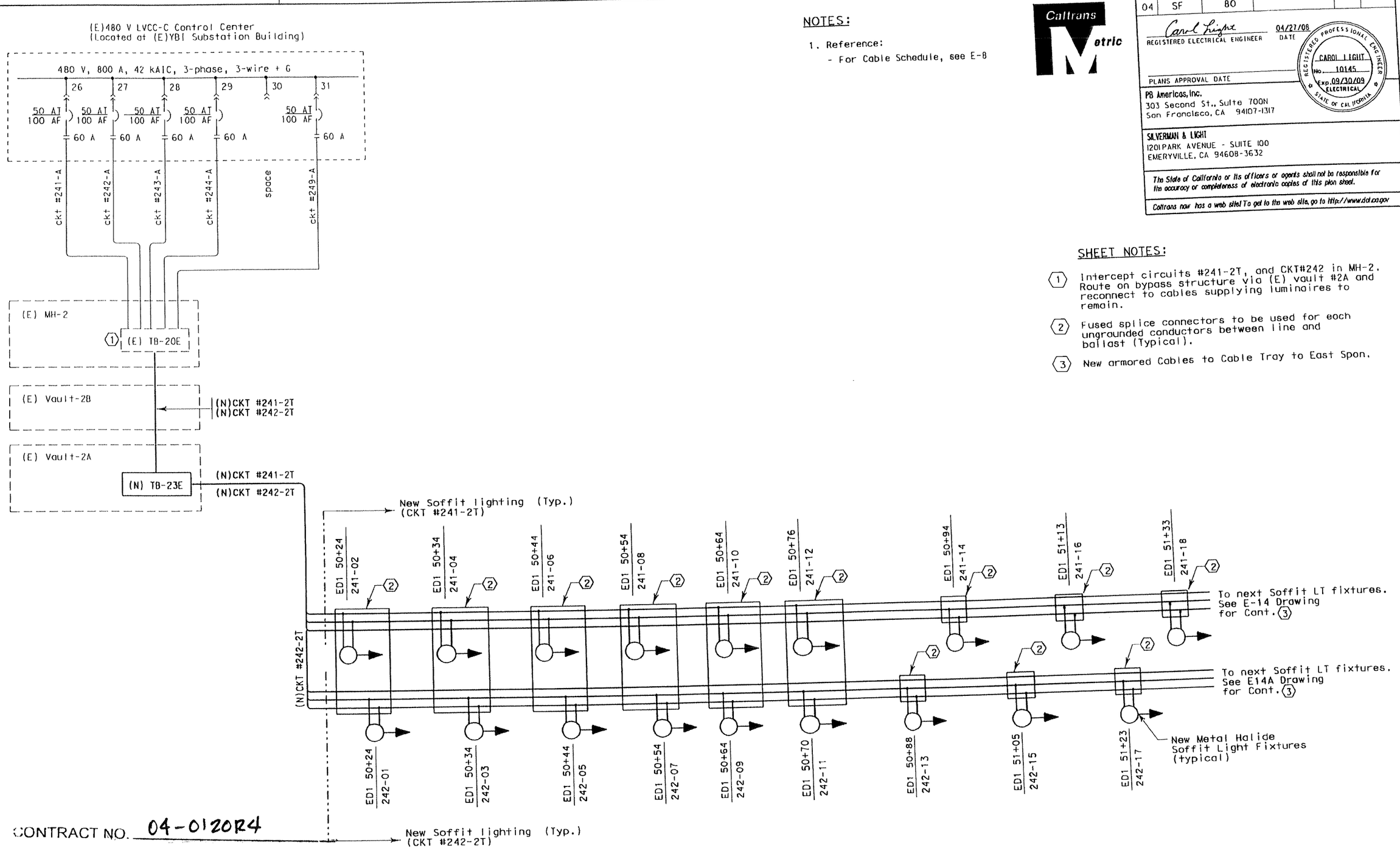

CONTRACT NO. 04-0120R4

CONTRACT CHANGE ORDER NO 196

SHEET 6 OF 12

DETAILS
TEMPORARY BYPASS STRUCTURE-WEST TIE IN EASTBOUND LIGHTING DIAGRAM

NO SCALE

E-14R4

THIS PLAN ACCURATE FOR ELECTRICAL WORK ONLY

FOR REDUCED PLANS ORIGINAL 0 20 40 60 80

DGN FILE =)WT12-E14R4.dgn

DATE	REVISED BY
	DATE REVISED
BJ	CL
CALCULATED/ DESIGNED BY	
CHECKED BY	
DESIGN OVERSIGHT	

STATE OF CALIFORNIA - DEPARTMENT OF TRANSPORTATION

Caltrans

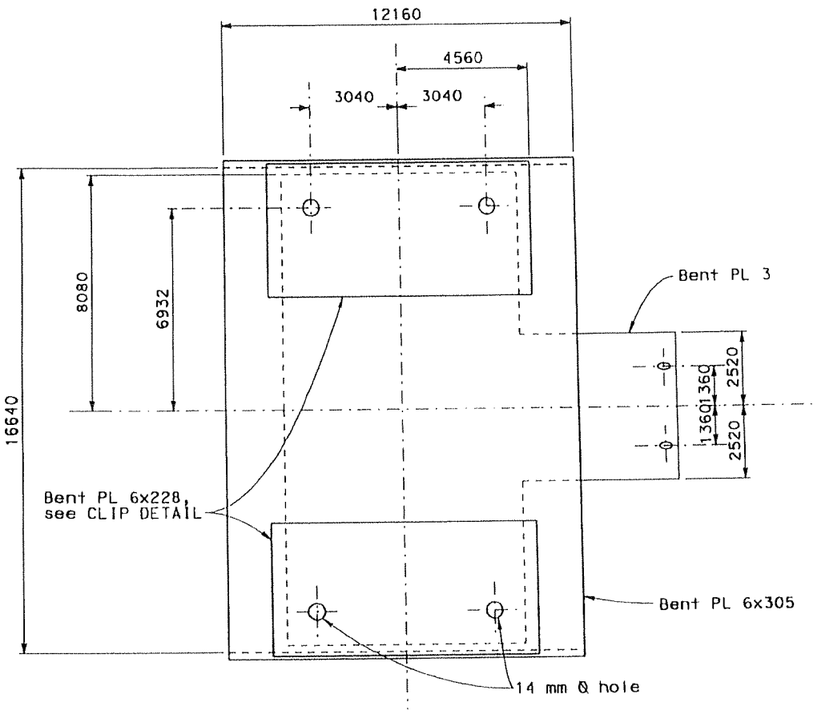

PLAN

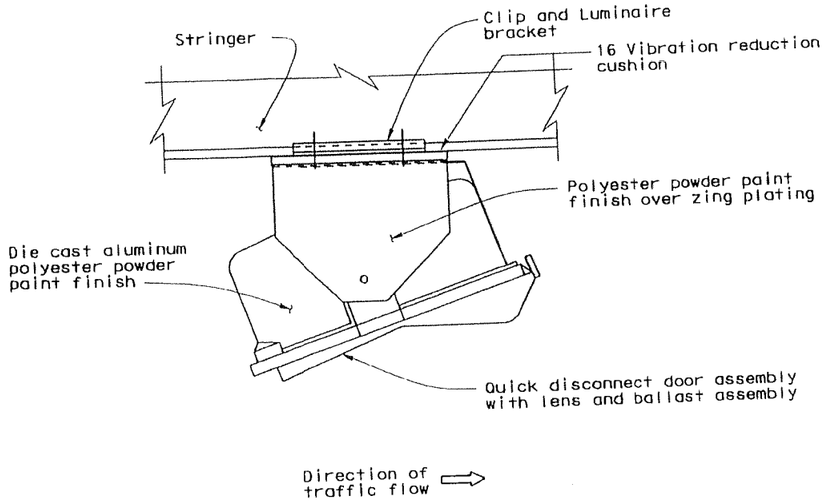

EASTBOUND LUMINAIRE MOUNTING DETAILS

1:5

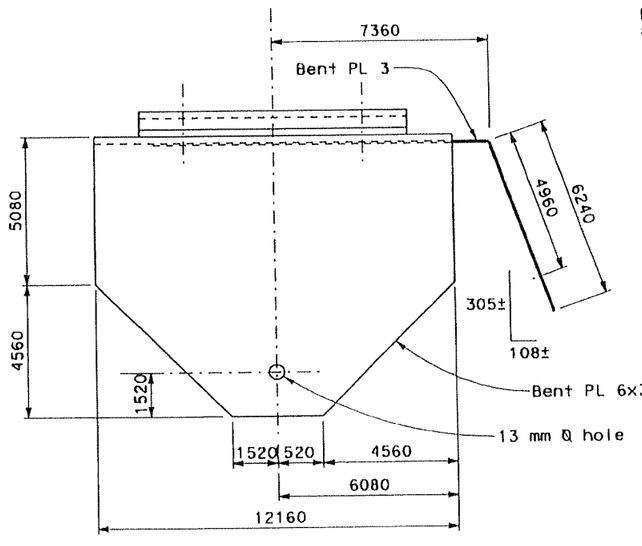

ELEVATION

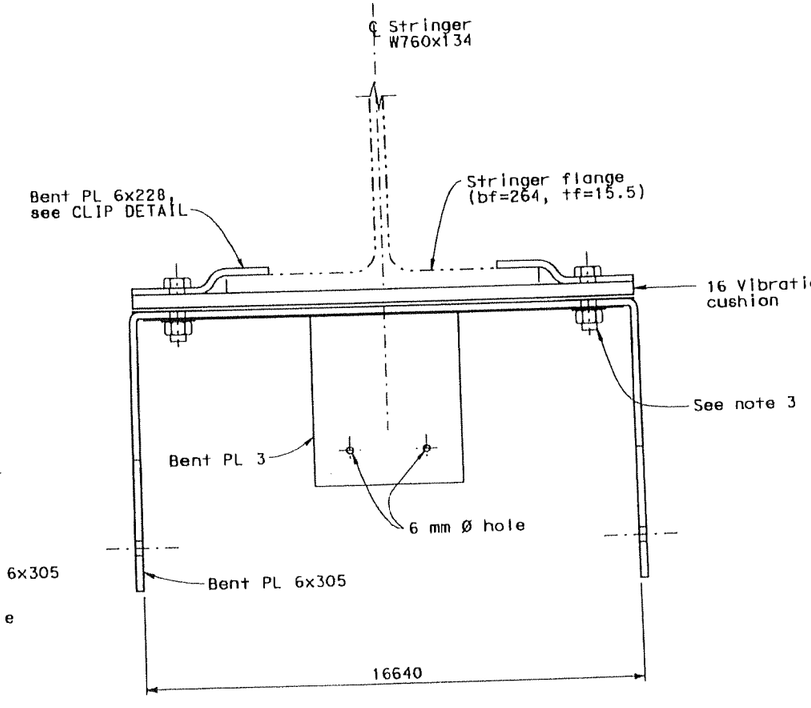

SECTION

LUMINAIRE BRACKET DETAIL

1:2.5

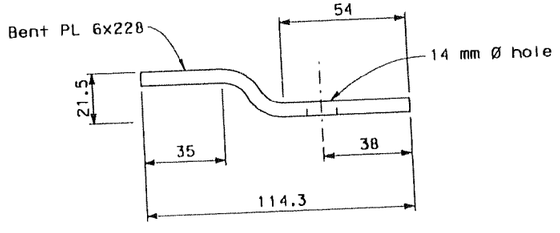

CLIP DETAIL

1:1

Notes:

1. The Contractor is to verify all controlling field dimensions before ordering or fabricating any material.
2. Fabricate bracket clips and brace from A36 steel grind sharp edges, hot dip galvanized.
3. Attach ½" diameter x 2" stainless steel bolts, with drilled hole in shank for stainless steel cotter pin, stainless steel flat washers, and stainless steel slotted nuts (all 18-8 stainless steel).

DIST	COUNTY	ROUTE	KILOMETER POST TOTAL PROJECT	SHEET NO	TOTAL SHEETS
04	SF	80			

Carol Light 04/27/09
REGISTERED ELECTRICAL ENGINEER DATE

PLANS APPROVAL DATE

REGISTERED PROFESSIONAL ENGINEER — CAROL LIGHT — No. 10145 — EXP. 09/30/09 ELECTRICAL — STATE OF CALIFORNIA

PB Americas, Inc.
303 Second St., Suite 700N
San Francisco, CA 94107-1317

SILVERMAN & LIGHT
1201 PARK AVENUE - SUITE 100
EMERYVILLE, CA 94608-3632

The State of California or its officers or agents shall not be responsible for the accuracy or completeness of electronic copies of this plan sheet.

Caltrans now has a web site! To get to the web site, go to http://www.dot.ca.gov

CONTRACT NO. 04-012024

CONTRACT CHANGE ORDER NO 196

SHEET 7 OF 12

TEMPORARY LIGHTING DETAILS
TEMPORARY BYPASS STRUCTURE-WEST TIE IN

SCALE AS SHOWN

ALL DIMENSIONS ARE IN MILLIMETERS UNLESS OTHERWISE SHOWN

E-15A

THIS PLAN ACCURATE FOR ELECTRICAL WORK ONLY

FOR REDUCED PLANS ORIGINAL SCALE IS IN MILLIMETERS 0 20 40 60 80

DGN FILE => WTI2-E15A.dgn

CU 04251 EA 0120R3

DESIGN OVERSIGHT

STATE OF CALIFORNIA - DEPARTMENT OF TRANSPORTATION

Caltrans

CALCULATED/ DESIGNED BY	DATE	REVISED BY	DATE REVISED
BJ			
CL			
CHECKED BY			

DIST	COUNTY	ROUTE	KILOMETER POST TOTAL PROJECT	SHEET No	TOTAL SHEETS
04	SF	80			

Carol Light
REGISTERED ELECTRICAL ENGINEER
04/27/09
DATE

PLANS APPROVAL DATE

REGISTERED PROFESSIONAL ENGINEER
CAROL LIGHT
No. 10145
Exp. 09/30/09
ELECTRICAL
STATE OF CALIFORNIA

PB Americas, Inc.
303 Second St., Suite 700N
San Francisco, CA 94107-1317

SILVERMAN & LIGHT
1201 PARK AVENUE - SUITE 100
EMERYVILLE, CA 94608-3632

The State of California or its officers or agents shall not be responsible for the accuracy or completeness of electronic copies of this plan sheet.

Caltrans now has a web site! To get to the web site, go to http://www.dot.ca.gov

Caltrans Metric

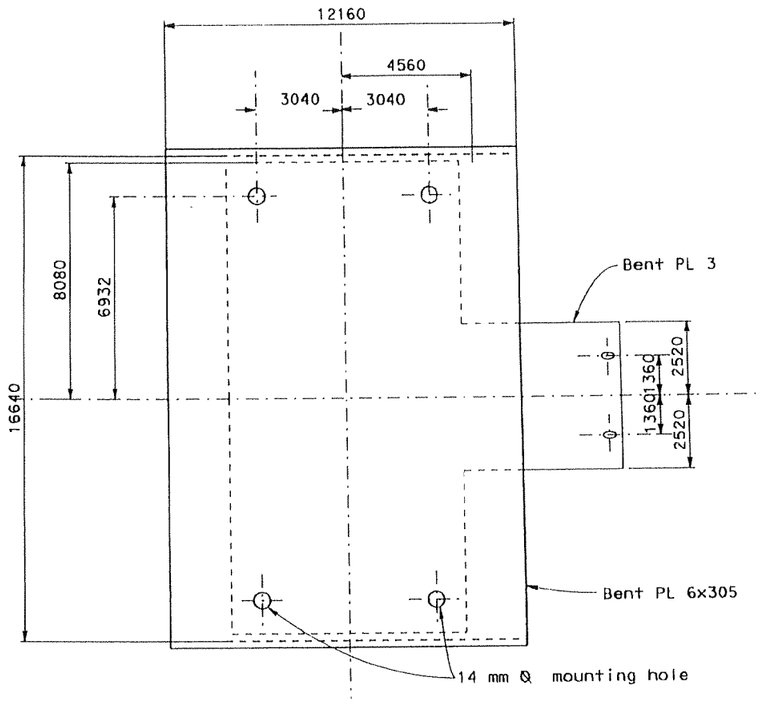

PLAN

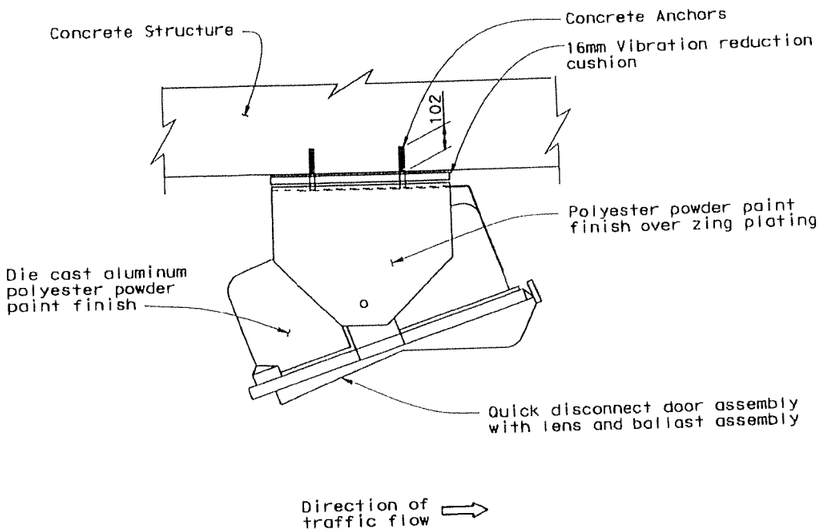

EASTBOUND SOFFIT LUMINAIRE MOUNTING DETAIL

Notes:

1. The Contractor is to verify all controlling field dimensions before ordering or fabricating any material.
2. Fabricate bracket clips and brace from A36 steel grind sharp edges, hot dip galvanized.
3. See Structural plans for additional mounting detail and specifications.

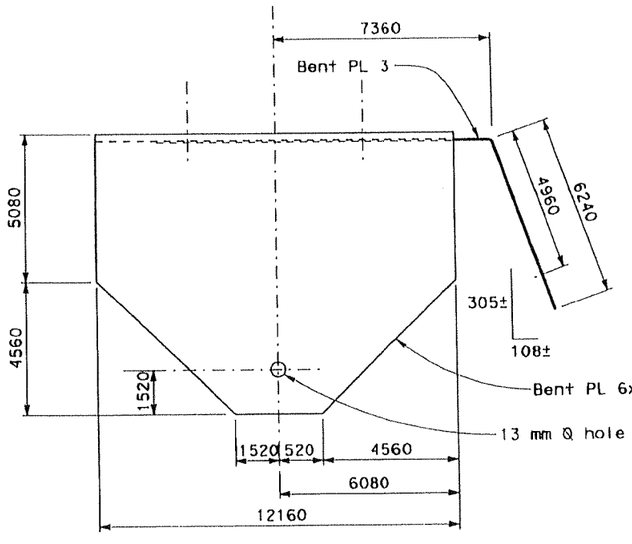

ELEVATION

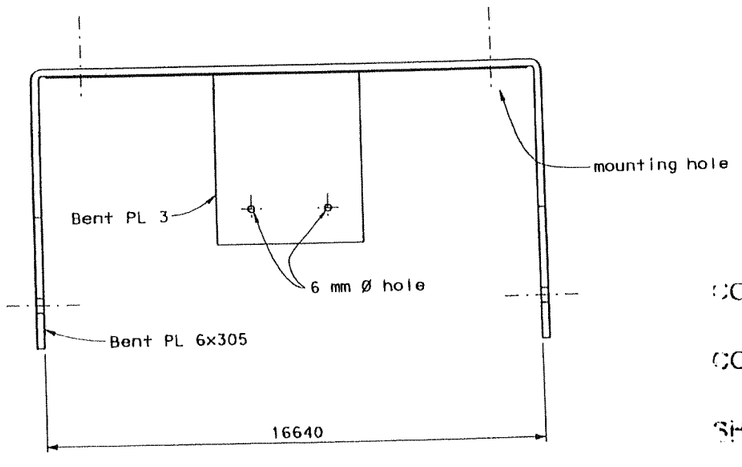

SECTION

LUMINAIRE BRACKET DETAIL

CONTRACT NO. 04-0120R4

CONTRACT CHANGE ORDER NO 196

SHEET 8 OF 12

TEMPORARY LIGHTING DETAILS
TEMPORARY BYPASS STRUCTURE-WEST TIE IN

NO SCALE

ALL DIMENSIONS ARE IN MILLIMETERS UNLESS OTHERWISE SHOWN

E-15R4

THIS PLAN ACCURATE FOR ELECTRICAL WORK ONLY

FOR REDUCED PLANS ORIGINAL SCALE IS IN MILLIMETERS 0 20 40 60 80

DGN FILE => WTI2-E15R4.dgn
USERNAME => bjud

CU 04251

EA 0120R3

STATE OF CALIFORNIA - DEPARTMENT OF TRANSPORTATION

Caltrans

DESIGN OVERSIGHT

CALCULATED/DESIGNED BY BJ DATE
CHECKED BY CL
REVISED BY
DATE REVISED

DIST	COUNTY	ROUTE	KILOMETER POST TOTAL PROJECT	SHEET No	TOTAL SHEETS
04	SF	80			

Caltrans Metric

Carol Light — 04/27/09
REGISTERED ELECTRICAL ENGINEER — DATE

REGISTERED PROFESSIONAL ENGINEER — CAROL LIGHT — No. 10145 — EXP. 09/30/09 ELECTRICAL — STATE OF CALIFORNIA

PLANS APPROVAL DATE

PB Americas, Inc.
303 Second St., Suite 700N
San Francisco, CA 94107-1317

SILVERMAN & LIGHT
1201 PARK AVENUE - SUITE 100
EMERYVILLE, CA 94608-3632

The State of California or its officers or agents shall not be responsible for the accuracy or completeness of electronic copies of this plan sheet.

Caltrans now has a web site! To get to the web site, go to http://www.dot.ca.gov

NOTES:

1. Reference:

   -for Lighting system block diagram, see Sheet E-24AR1.

   -for Roadway lighting mounting detail, see TRC drawing on Sheet E-27.

SHEET NOTES:

(1) Install new type III soffit fixture "HOLOPHANE TFP series luminaire" with 175 watts MH, 480 V, double fusing and with provision of special bracket. Mount fixture on concrete structure of westbound deck between bent caps.

(2) Install new NEMA type 4 splice box. Splice box to have a minimum dimension of 305(W) x 305(L) x 152(D). Secure box to first longitudinal member inside south truss. Provide fused splice connector to each ungrounded conductor.

(3) Install new 41C conduit with 6#6 and 1#8G conductors (CKT's #241 and 242). Secure conduit to the first longitudinal member inside south truss outside traffic lane.

(4) Install new 27C type 4 conduit with 3#12 AWG conductors from splice box to lighting fixture. Secure conduit every 1.5 meter with unistrut and clamps

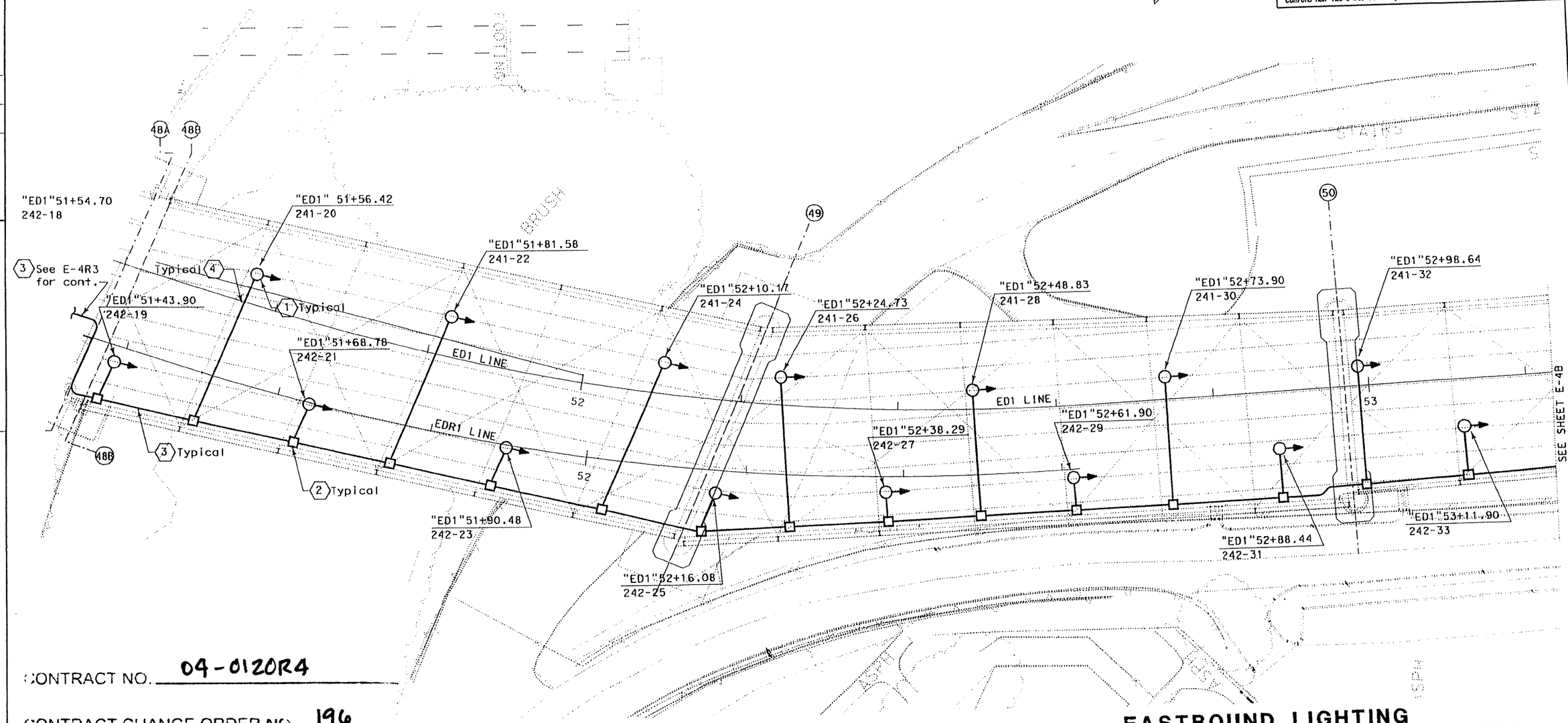

LOWER DECK

EASTBOUND LIGHTING
TEMPORARY BYPASS STRUCTURE - VIADUCT

SCALE: 1:250

E-21R1

CONTRACT NO. 04-0120R4

CONTRACT CHANGE ORDER NO 196

SHEET 9 OF 12

THIS PLAN ACCURATE FOR ELECTRICAL WORK ONLY

ALL DIMENSIONS ARE IN METERS UNLESS OTHERWISE SHOWN

FOR REDUCED PLANS ORIGINAL SCALE IS IN MILLIMETERS 0 20 40 60 80

DGN FILE =>Viaduct_E04A.dgn
USERNAME =>blind

CU 04251

EA 0120R3

STATE OF CALIFORNIA - DEPARTMENT OF TRANSPORTATION — Caltrans

DESIGN OVERSIGHT

DATE	REVISED BY	DATE REVISED

CALCULATED/DESIGNED BY: BJ
CHECKED BY: CL

DIST	COUNTY	ROUTE	KILOMETER POST TOTAL PROJECT	SHEET No	TOTAL SHEETS
04	SF	80			

Caltrans Metric

Carol Light
REGISTERED ELECTRICAL ENGINEER
04/27/09
DATE

REGISTERED PROFESSIONAL ENGINEER
CAROL LIGHT
No. 10145
Exp. 09/30/09
ELECTRICAL
STATE OF CALIFORNIA

PLANS APPROVAL DATE

PB Americas, Inc.
303 Second St., Suite 700N
San Francisco, CA 94107-1317

SILVERMAN & LIGHT
1201 PARK AVENUE - SUITE 100
EMERYVILLE, CA 94608-3632

The State of California or its officers or agents shall not be responsible for the accuracy or completeness of electronic copies of this plan sheet.

Caltrans now has a web site! To get to the web site, go to http://www.dot.ca.gov

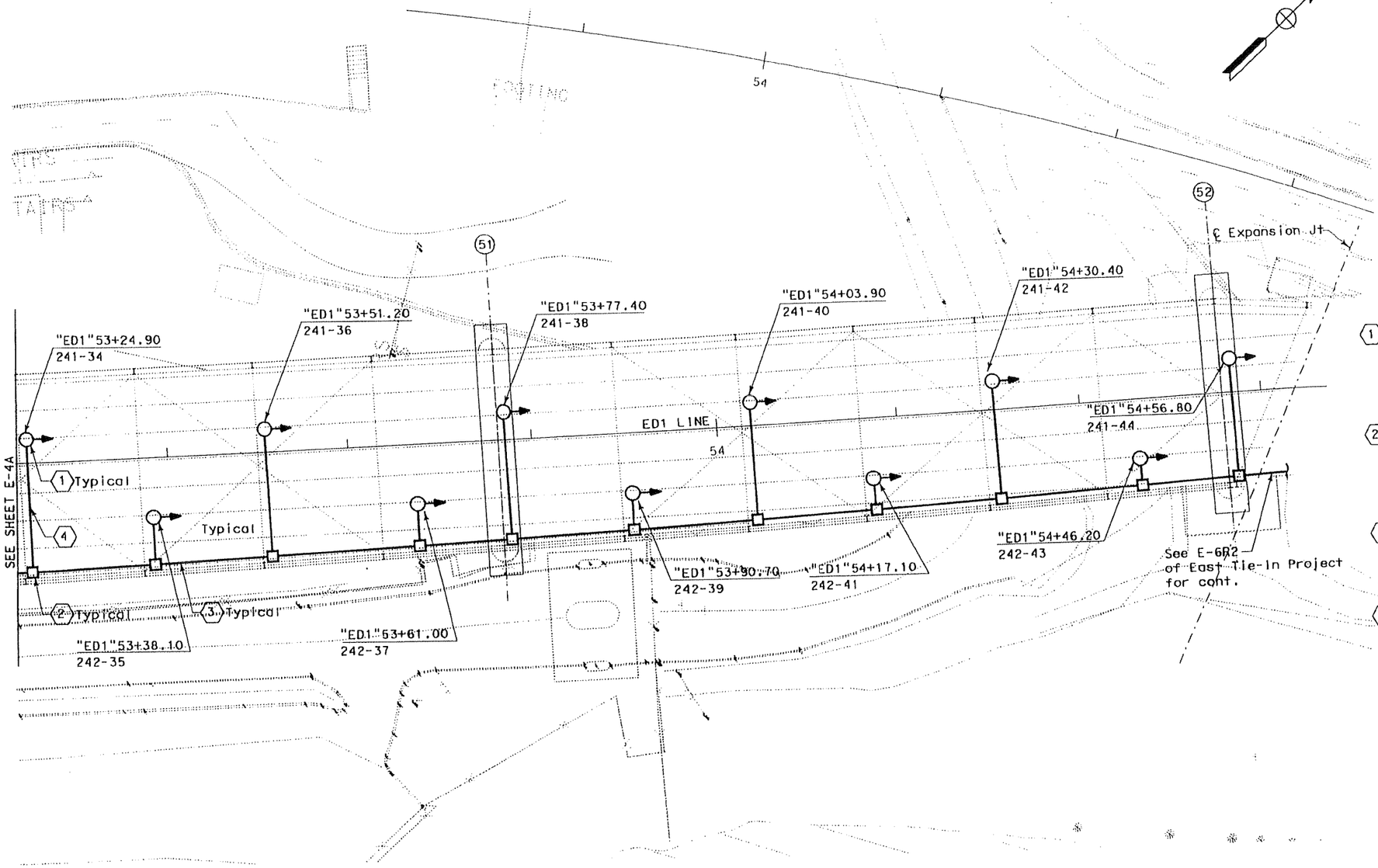

NOTES:

1. Reference:

   -for Lighting system block diagram, see Sheet E-24AR1.

   -for Roadway lighting mounting detail, see TRC drawing Sheet E-27.

SHEET NOTES:

1. Install new type III soffit fixture "HOLOPHANE TFP series luminaire" with 175 watts MH, 480 V, double fusing and with provision of special bracket. Mount fixture on concrete structure of westbound deck between bent caps.
2. Install new NEMA type 4 splice box. Splice box to have a minimum dimension of 305(W) x 305(L) x 152(D). Secure box to first longitudinal member inside south truss. Provide fused splice connector to each ungrounded conductor.
3. Install new 41C conduit with 6#6 and 1#8G conductors (CKT's #241 and 242). Secure conduit to the first longitudinal member inside south truss outside traffic lane.
4. Install new 27C type 4 conduit with 3#12 AWG conductors from splice box to lighting fixture. Secure conduit every 1.5 meter with unistrut and clamps

CONTRACT NO. 04-0120R4

CONTRACT CHANGE ORDER NO 196

SHEET 10 OF 12

LOWER DECK

EASTBOUND LIGHTING
TEMPORARY BYPASS STRUCTURE - VIADUCT

SCALE: 1:250

E-22R1

ALL DIMENSIONS ARE IN METERS UNLESS OTHERWISE SHOWN

THIS PLAN ACCURATE FOR ELECTRICAL WORK ONLY

FOR REDUCED PLANS ORIGINAL SCALE IS IN MILLIMETERS 0 20 40 60 80

DGN FILE => Viaduct_E04B.dgn
USERNAME => bjud

CU 04251

EA 0120R3

STATE OF CALIFORNIA - DEPARTMENT OF TRANSPORTATION

Caltrans

DESIGN OVERSIGHT

CALCULATED/DESIGNED BY BJ DATE REVISED BY

CHECKED BY CL DATE REVISED

NOTES:

1. Reference:
   - For Cable Schedule, see E-8

SHEET NOTES:

(1) Intercept circuits #241-2T, and CKT#242 in MH-2. Route on bypass structure via (E) vault #2A and reconnect to cables supplying luminaires to remain.

(2) Fused splice connectors to be used for each ungrounded conductors between line and ballast (typical).

(3) New armored Cables to Cable Tray to East Span.

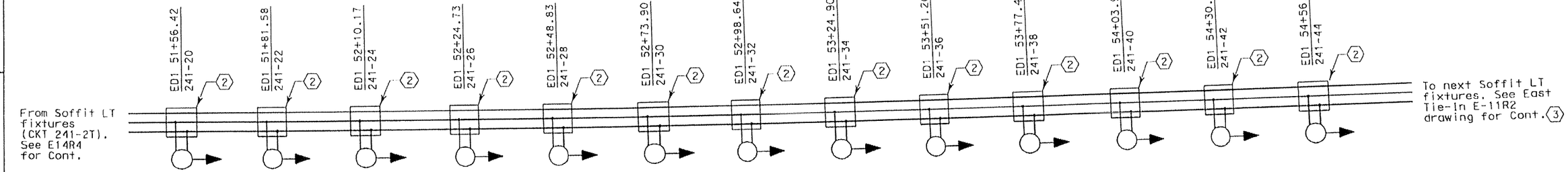

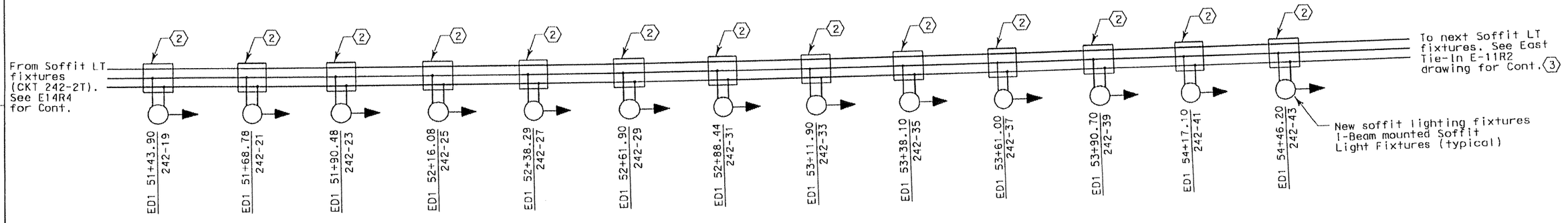

CONTRACT NO. 04-0120R4

CONTRACT CHANGE ORDER NO 196

SHEET 11 OF 12

DETAILS
TEMPORARY BYPASS STRUCTURE-VIADUCT EASTBOUND LIGHTING DIAGRAM
NO SCALE

E-24AR1

THIS PLAN ACCURATE FOR ELECTRICAL WORK ONLY

FOR REDUCED PLANS ORIGINAL SCALE IS IN MILLIMETERS 0 20 40 60 80

DGN FILE =>Viaduct_E14A.dgn

CU 04251 EA 0120R3

DESIGN OVERSIGHT | CALCULATED/DESIGNED BY | BJ | DATE | REVISED BY
CHECKED BY | CL | DATE REVISED

STATE OF CALIFORNIA - DEPARTMENT OF TRANSPORTATION

Caltrans

Caltrans Metric

04 SF 80

Carol Light 04/27/09
REGISTERED ELECTRICAL ENGINEER DATE

CAROL LIGHT No. 10145 Exp.09/30/09 ELECTRICAL

PLANS APPROVAL DATE

PB Americas, Inc.
303 Second St., Suite 700N
San Francisco, CA 94107-1317

SILVERMAN & LIGHT
1201 PARK AVENUE, SUITE 100
EMERYVILLE, CA 94608-3632

The State of California or its officers or agents shall not be responsible for the accuracy or completeness of electronic copies of this plan sheet.

Caltrans now has a web site! To get to the web site, go to http://www.dot.ca.gov

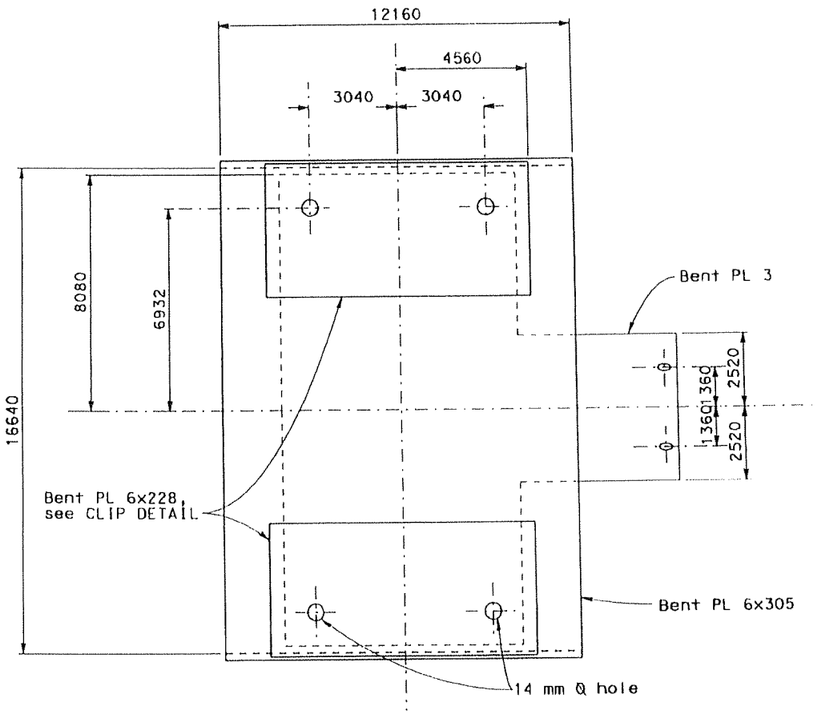

PLAN

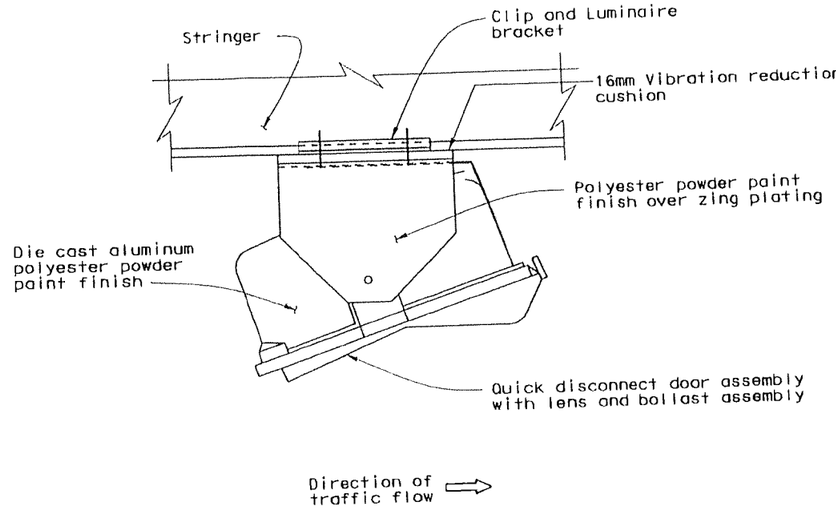

EASTBOUND LUMINAIRE MOUNTING DETAILS

1:5

Notes:

1. The Contractor is to verify all controlling field dimensions before ordering or fabricating any material.
2. Fabricate bracket clips and brace from A36 steel grind sharp edges, hot dip galvanized.
3. Attach ½" diameter x 2" stainless steel bolts, with drilled hole in shank for stainless steel cotter pin, stainless steel flat washers, and stainless steel slotted nuts (all 18-8 stainless steel).

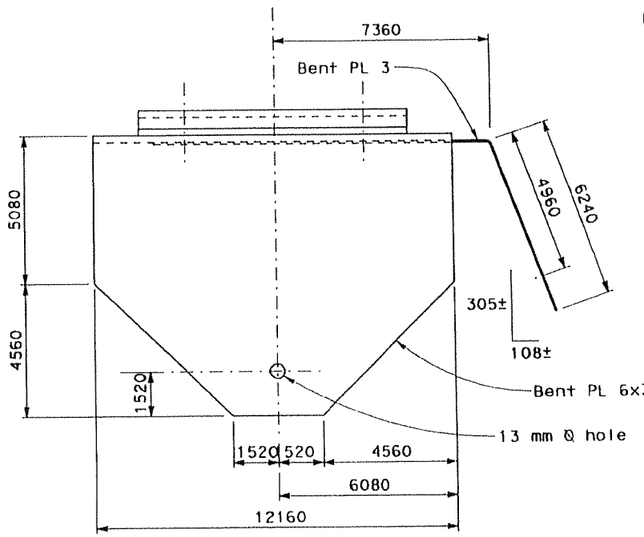

ELEVATION

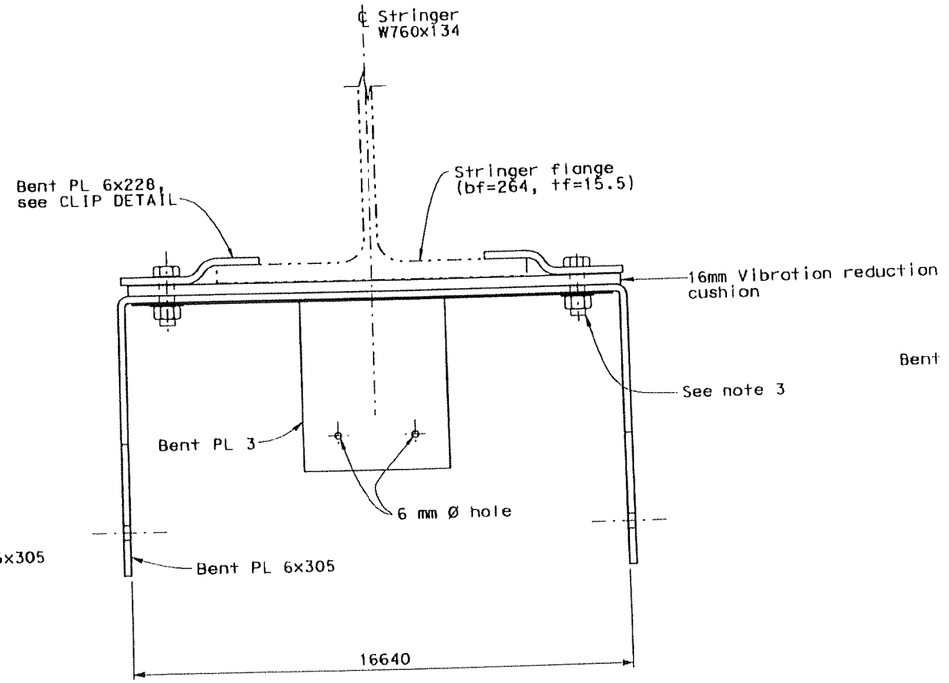

SECTION

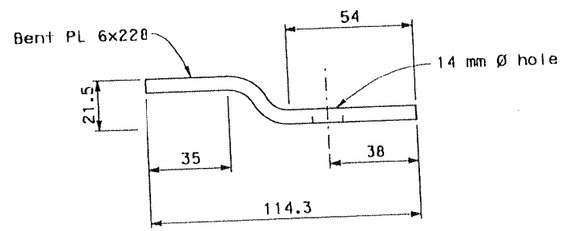

CLIP DETAIL

1:1

LUMINAIRE BRACKET DETAIL

1:2.5

THIS PLAN ACCURATE FOR ELECTRICAL WORK ONLY

FOR REDUCED PLANS ORIGINAL SCALE IS IN MILLIMETERS 0 20 40 60 80

ALL DIMENSIONS ARE IN MILLIMETERS UNLESS OTHERWISE SHOWN

DGN FILE =>ETI-E27A.dgn

TEMPORARY LIGHTING DETAILS
TEMPORARY BYPASS STRUCTURE-EAST TIE IN

SCALE AS SHOWN

E-27A

DIST	COUNTY	ROUTE	KILOMETER POST TOTAL PROJECT	SHEET No	TOTAL SHEETS
04	SF	80			

Caltrans Metric

Carol Light 04/27/09
REGISTERED ELECTRICAL ENGINEER DATE

REGISTERED PROFESSIONAL ENGINEER — CAROL LIGHT — No. 10145 — EXP. 09/30/08 ELECTRICAL — STATE OF CALIFORNIA

PLANS APPROVAL DATE

PB Americas, Inc.
303 Seaond St., Suite 700N
San Francisco, CA 94107-1317

SILVERMAN & LIGHT
1201 PARK AVENUE - SUITE 100
EMERYVILLE, CA 94608-3632

The State of California or its officers or agents shall not be responsible for the accuracy or completeness of electronic copies of this plan sheet.

Caltrans now has a web site! To get to the web site, go to http://www.dot.ca.gov

CONTRACT NO. 04-0120R4

CONTRACT CHANGE ORDER NO 196

SHEET 12 OF 12

DATE	REVISED BY	DATE REVISED
CALCULATED/ DESIGNED BY	BJ	
CHECKED BY	CL	

DESIGN OVERSIGHT
HONG WONG

STATE OF CALIFORNIA - DEPARTMENT OF TRANSPORTATION
Caltrans

CU 04251 EA 0120R4

STATE OF CALIFORNIA - DEPARTMENT OF TRANSPORTATION

CONTRACT CHANGE ORDER MEMORANDUM

DATE: 6/22/2009 Page 1 of 1

TO: MIKE FORNER / DEANNA VILCHECK	FILE: E.A. 04 - 0120R4
	CO-RTE-PM SF-80-12.6/13.2
FROM: BILL CASEY	FED. NO. ACBRIM-080-1(097)N
CCO#: 196 SUPPLEMENT#: 0 Category Code: CBPC	CONTINGENCY BALANCE (incl. this change) $35,208,157.59
COST: $59,906.00 INCREASE ☑ DECREASE ☐	HEADQUARTERS APPROVAL REQUIRED? ☐ YES ☑ NO
SUPPLEMENTAL FUNDS PROVIDED: $0.00	IS THIS REQUEST IN ACCORDANCE WITH ENVIRONMENTAL DOCUMENTS? ☑ YES ☐ NO
CCO DESCRIPTION: Lower Deck Soffit Lighting	**PROJECT DESCRIPTION:** CONSTRUCT ROUTE 80 TEMP BYPASS STRUCTURE

Original Contract Time:	Time Adj. This Change:	Previously Approved CCO Time Adjustments:	Percentage Time Adjusted: (including this change)	Total # of Unreconciled Deferred Time CCO(s): (including this change)
475 Day(s)	0 Day(s)	1195 Day(s)	252 %	7

THIS CHANGE ORDER PROVIDES FOR:

Furnishing and installing soffit lighting in the lower deck of the Temporary Bypass Structure (TBS).

This project, the Yerba Buena Island Detour (YBID), was awarded in March 2004 to construct a detour that will allow for the tie in of the new east span of the San Francisco Oakland Bay Bridge to Yerba Buena Island. The YBID encompasses three main structures, the East Tie-In to the existing bridge, the West Tie-In (WTI) to Yerba Buena Island, and the Viaduct structure between the two tie ins.

This change order is necessary to supplement the original lighting design in the lower deck of the Temporary Bypass Structure. The original design lacked adequate lighting in the lower deck.

Compensation for this work shall be paid for as extra work at an agreed lump sum price of $ 59,906.00 which shall be financed from the contract's contingency funds. A cost analysis is on file.

There is no time adjustment since this change does not affect the critical operation of the project.

This change was concurred with by Alec Melkonians - Asst. Project Manager, and Hong Wong - Project Engineer.

Maintenance concurrence is not required as this change does not affect any permanent roadway features.

CONCURRED BY:		
Construction Engineer:	Jeannie Balderramos	Date 6/25/09
Bridge Engineer:		Date
Project Engineer:	Hong Wong, PE	Date 6/22/09
Project Manager:	Alec Melkonians	Date 6/23/09
FHWA Rep.:		Date
Environmental:		Date
Other (specify):		Date
Other (specify):		Date
District Prior Approval By:		Date
HQ (Issue Approve) By:		Date
Resident Engineer's Signature:		Date 6-25-09

ESTIMATE OF COST	THIS REQUEST	TOTAL TO DATE
ITEMS	$0.00	$0.00
FORCE ACCOUNT	$0.00	$0.00
AGREED PRICE	$59,906.00	$59,906.00
ADJUSTMENT	$0.00	$0.00
TOTAL	$59,906.00	$59,906.00

FEDERAL PARTICIPATION

☐ PARTICIPATING ☐ PARTICIPATING IN PART ☑ NONE
☐ NON-PARTICIPATING (MAINTENANCE) ☐ NON-PARTICIPATING

FEDERAL SEGREGATION (if more than one Funding Source or P.I.P. type)
☐ CCO FUNDED PER CONTRACT ☐ CCO FUNDED AS FOLLOWS

FEDERAL FUNDING SOURCE	PERCENT

ADA Notice: For individuals with sensory disabilities, this document is available in alternate formats. For information call: (916) 654-6410 or TDD (916) 654-3880 or write Records and Forms Management, 1120 N Street, MS-89, Sacramento, CA 95814.

CONTRACT CHANGE ORDER

Change Requested by: Engineer

CCO: 198	Suppl. No. 0	Contract No. 04 - 0120R4	Road SF-80-12.6/13.2	FED. AID LOC.: ACBRIM-080-1(097)N

To: CC MYERS INC

You are directed to make the following changes from the plans and specifications or do the following described work not included in the plans and specifications for this contract. ***NOTE: This change order is not effective until approved by the Engineer.***

Description of work to be done, estimate of quantities and prices to be paid. (Segregate between additional work at contract price, agreed price and force account.) Unless otherwise stated, rates for rental of equipment cover only such time as equipment is actually used and no allowance will be made for idle time. This last percentage shown is the net accumulated increase or decrease from the original quantity in the Engineer's Estimate.

1) Eliminate the as-planned pavement delineation and sign plans shown on Contract Plan Sheets No. 72 through No. 77.

2) Furnish and Install the pavement delineation and signing (including barricades) in accordance with the attached revised pavement delineation and sign plans and sign and pavement delineation quantity plans: PD-1R1, PD-2R1, PD-3R2, PD-4R2, PD-5R2, PD-6R1, PD-7R, and PD-8R1 as shown on sheets no. 3 through 10 of this change order, and ETI Striping layout (sheet no. 11 of this change order) and Sign Details (sheet no.12 of this change order).

3) Relocate and install crash cushions based on the following layout plans: L-1 Westbound (sheet no. 7 of 13 of CCO 143), L-2 Westbound (sheet no. 6 of 193 of the original contract drawings), and L-2 Eastbound (sheet no. 8 of 13 of CCO 143)

Estimate of Decrease in Contract Item at Contract Price:

Item No. 27: TEMPORARY TRAFFIC STRIPE (PAINT)								
	-7830 M	(-100.00%)	@	$2.50	/M	=	-$19,575.00	(-100.00%)
Item No. 28: CHANNELIZER (SURFACE MOUNTED)								
	-50 EA	(-71.43%)	@	$25.00	/EA	=	-$1,250.00	(-71.43%)
Item No. 29: CHANNELIZER (SURFACE MOUNTED)								
	-40 EA	(-100.00%)	@	$25.00	/EA	=	-$1,000.00	(-100.00%)
Item No. 30: TEMPORARY PAVEMENT MARKER								
	-1750 EA	(-100.00%)	@	$3.00	/EA	=	-$5,250.00	(-100.00%)
Item No. 37: REMOVE THERMOPLASTIC TRAFFIC STRIPE								
	-4095 M	(-100.00%)	@	$3.00	/M	=	-$12,285.00	(-100.00%)
Item No. 38: RELOCATE ROADSIDE SIGN-ONE POST								
	-3 EA	(-100.00%)	@	$200.00	/EA	=	-$600.00	(-100.00%)
Item No. 61: ROADSIDE SIGN - ONE POST								
	-9 EA	(-100.00%)	@	$250.00	/EA	=	-$2,250.00	(-100.00%)
Item No. 66: DELINEATOR (CLASS 1)								
	-11 EA	(-100.00%)	@	$40.00	/EA	=	-$440.00	(-100.00%)
Item No. 67: OBJECT MARKER (TYPE P)								
	-3 EA	(-100.00%)	@	$100.00	/EA	=	-$300.00	(-100.00%)
Item No. 69: CRASH CUSHION (ADIEM)								
	-2 EA	(-100.00%)	@	$18,000.00	/EA	=	-$36,000.00	(-100.00%)
Item No. 70: THERMOPLASTIC PAVEMENT MARKING								
	-30 M2	(-100.00%)	@	$50.00	/M2	=	-$1,500.00	(-100.00%)
Item No. 71: 100 MM THERMOPLASTIC TRAFFIC STRIPE								
	-3676 M	(-100.00%)	@	$2.50	/M	=	-$9,190.00	(-100.00%)
Item No. 72: 200 MM THERMOPLASTIC TRAFFIC STRIPE								
	-380 M	(-100.00%)	@	$5.00	/M	=	-$1,900.00	(-100.00%)
Item No. 74: 100 MM THERMOPLASTIC TRAFFIC STRIPE								
	-6268 M	(-100.00%)	@	$1.75	/M	=	-$10,969.00	(-100.00%)
Item No. 75: PAVEMENT MARKER (NON-REFLECTIVE)								
	-2571 EA	(-100.00%)	@	$2.00	/EA	=	-$5,142.00	(-100.00%)
Item No. 76: PAVEMENT MARKER (REFLECTIVE)								
	-1068 EA	(-100.00%)	@	$3.50	/EA	=	-$3,738.00	(-100.00%)

CONTRACT CHANGE ORDER

Change Requested by: Engineer

CCO: 198	Suppl. No. 0	Contract No. 04 - 0120R4	Road SF-80-12.6/13.2	FED. AID LOC.: ACBRIM-080-1(097)N

Item No. 89: BARRICADE (LEFT IN PLACE)
-4 EA (–100.00%) @ $125.00 /EA = –$500.00 (–100.00%)

Item No. 95: INSTALL SIGN (STRAP AND SADDLE BRACKET
-6 EA (–100.00%) @ $150.00 /EA = –$900.00 (–100.00%)

Estimated total cost for Decrease in Contract Item.....($112,789.00)

Extra Work at Lump Sum:

Provide compensation to the Contractor for all costs associated with furnishing and installing the pavement delineation, signing, barricades and crash cushions and for relocating all crash cushions as specified under Sheets No. 4 through 13 of this change order.

For this work the contractor will be compensated at agreed lump sum price of $412,252.00. This sum constitutes full compensation for providing labor, material and equipment tools, consumables, incidentals, accelerations, inefficiencies, an all applicable markups by reason of this change.

Estimated cost of Extra Work at Lump Sum $412,252.00

In accordance with section 4-1.03B(3), Eliminated Items, of the Standard Specifications, the adjustments due to the elimination of the above items, except item no. 28, channelizer (surface mounted), is zero.

In accordance with section 4-1.03B(2), Decrease of More than 25 percent, of the Standard Specifications, there will be no adjustment for the units of work on item no. 28, channelizer (surface mounted), due to the decrease in excess of 25% of the Engineer's Estimate.

RECEIVED 011478 JAN 21 9

Estimated Cost: Increase ☑ Decrease ☐ **$299,463.00**

By reason of this order the time of completion will be adjusted as follows: 0 days

Submitted by

Signature	Resident Engineer	Date
Deanna Vilcheck	BILL CASEY	9/3/09

Approval Recommended by

Signature	Area Construction Manager	Date
Deanna Vilcheck	DEANNA VILCHECK	9/3/09

Engineer Approval by

Signature	Area Construction Manager	Date
Deanna Vilcheck	DEANNA VILCHECK	12/14/09

We the undersigned contractor, have given careful consideration to the change proposed and agree, if this proposal is approved, that we will provide all equipment, furnish the materials, except as may otherwise be noted above, and perform all services necessary for the work above specified, and will accept as full payment therefor the prices shown above.

NOTE: If you, the contractor, do not sign acceptance of this order, your attention is directed to the requirements of the specifications as to proceeding with the ordered work and filing a written protest within the time therein specified.

Contractor Acceptance by

Signature	(Print name and title)	Date
[signature]	DANIEL E. HIMICK, PRESIDENT	11/24/09

DIST	COUNTY	ROUTE	KILOMETER POST TOTAL PROJECT	SHEET No	TOTAL SHEETS
04	SF	80	12.6/13.2	72	193

REGISTERED CIVIL ENGINEER

3-31-03
PLANS APPROVAL DATE

Karen Gemill
No. C60173
Exp. 06/30/04
CIVIL
STATE OF CALIFORNIA

The State of California or its officers or agents shall not be responsible for the accuracy or completeness of electronic copies of this plan sheet.

Caltrans now has a web site! To get to the web site, go to: http://www.dot.ca.gov

PARSONS BRINCKERHOFF QUADE & DOUGLAS, INC.
303 Second St., Suite 700N
San Francisco, CA 94107-1317

CONTRACT NO. 04-0120R4

CONTRACT CHANGE ORDER NO 198

SHEET 3 OF 12

REGISTERED PROFESSIONAL ENGINEER
CHEUK HONG WONG
C 60145
EXP 6/30/04
CIVIL
STATE OF CALIFORNIA

	DATE	REVISED BY	DATE REVISED
CALCULATED/ DESIGNED BY	R. Maxwell	RM	3/03
CHECKED BY	T. Dougherty		
DESIGN OVERSIGHT	Bob Zandipour		

STATE OF CALIFORNIA - DEPARTMENT OF TRANSPORTATION
Caltrans

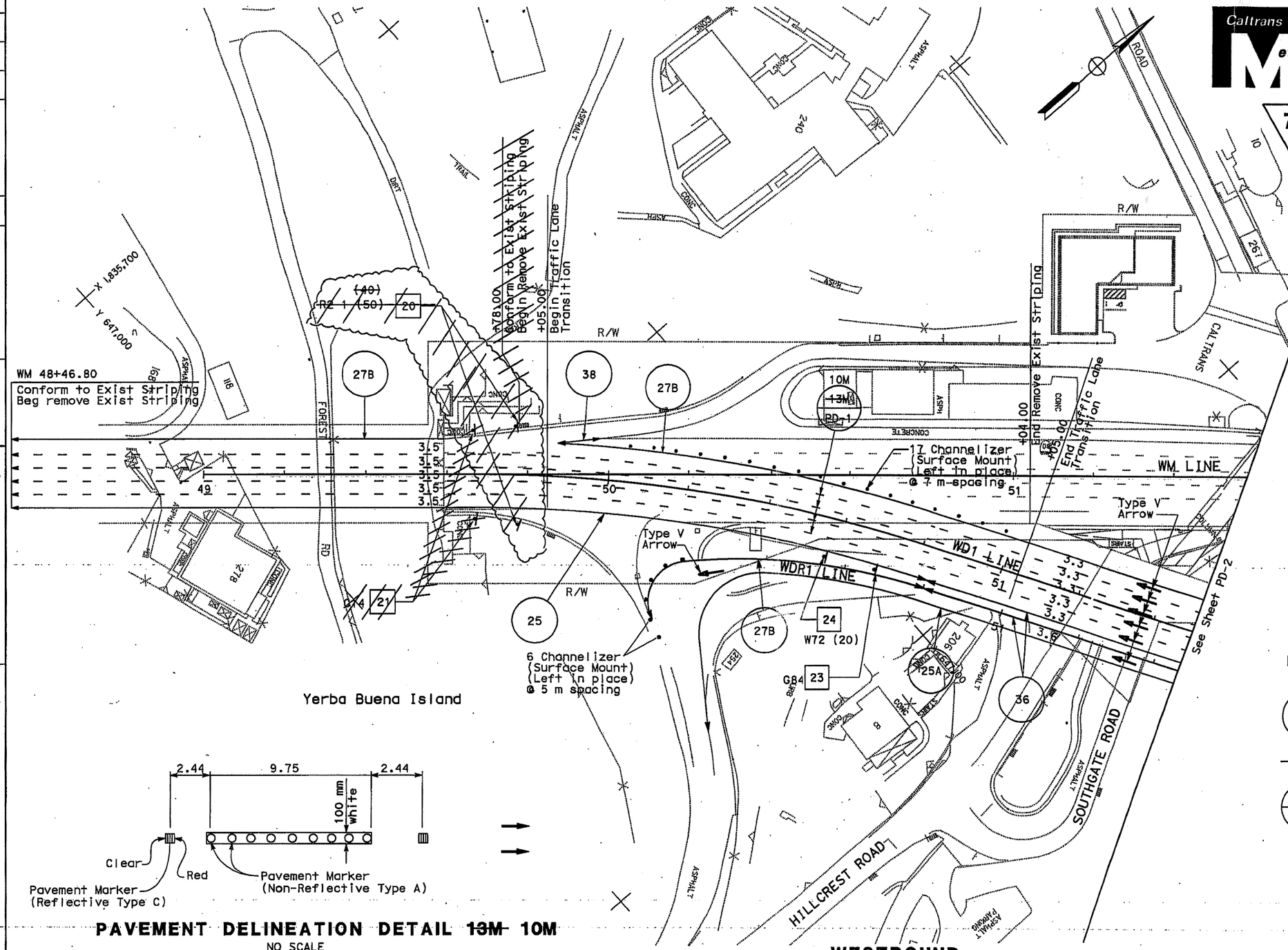

PAVEMENT DELINEATION DETAIL ~~13M~~ 10M
NO SCALE

TEMPORARY PAVEMENT DELINEATION DETAILS

LEGEND:

- XX — Detail Number
- Change in Pavement Delineation Detail
- A / PD-4 — Special Detail
- ■ Relocate Sign

SSBM - Strap and Saddle Bracket Method

WESTBOUND

WB 7-27-2009
PAVEMENT DELINEATION AND SIGN PLAN
SCALE: 1:500

7 **REVISED PER ADDENDUM NO. 7 DATED AUGUST 4, 2003**

THIS PLAN ACCURATE FOR PAVEMENT DELINEATION AND SIGNING WORK ONLY.

ALL DIMENSIONS ARE IN METERS UNLESS OTHERWISE SHOWN

PD-1R1

LAST REVISION DATE PLOTTED => 02-AUG-2009
00-00-00 TIME PLOTTED => 21:28

DIST	COUNTY	ROUTE	KILOMETER POST TOTAL PROJECT	SHEET No	TOTAL SHEETS
04	SF	80	12.6/13.2	73	193

REGISTERED CIVIL ENGINEER

3-31-03
PLANS APPROVAL DATE

REGISTERED PROFESSIONAL ENGINEER No. C60173 Exp. 06/30/04 CIVIL STATE OF CALIFORNIA

The State of California or its officers or agents shall not be responsible for the accuracy or completeness of electronic copies of this plan sheet.

Caltrans now has a web site! To get to the web site, go to: http://www.dot.ca.gov

PARSONS BRINCKERHOFF QUADE & DOUGLAS, INC.
303 Second St., Suite 700N
San Francisco, CA 94107-1317

CONTRACT NO. 04-0120R4

CONTRACT CHANGE ORDER NO 198

SHEET 4 OF 12

	REVISED BY	DATE
	RM	3/03
	DATE REVISED	2/03
CALCULATED/ DESIGNED BY	R. Maxwell	2/03
CHECKED BY	T. Dougherty	
DESIGN OVERSIGHT	Bob Zandipour	

STATE OF CALIFORNIA - DEPARTMENT OF TRANSPORTATION
Caltrans

25 Install Overhead Sign at approx Sta "WD1" 53+56 on the left
G85 7000 mm x 3048 mm

EXIT 4

Treasure Island
Yerba Buena Is.

400 mm U.C.
300 mm L.C.
300 mm CAPS
375 mm Numbers

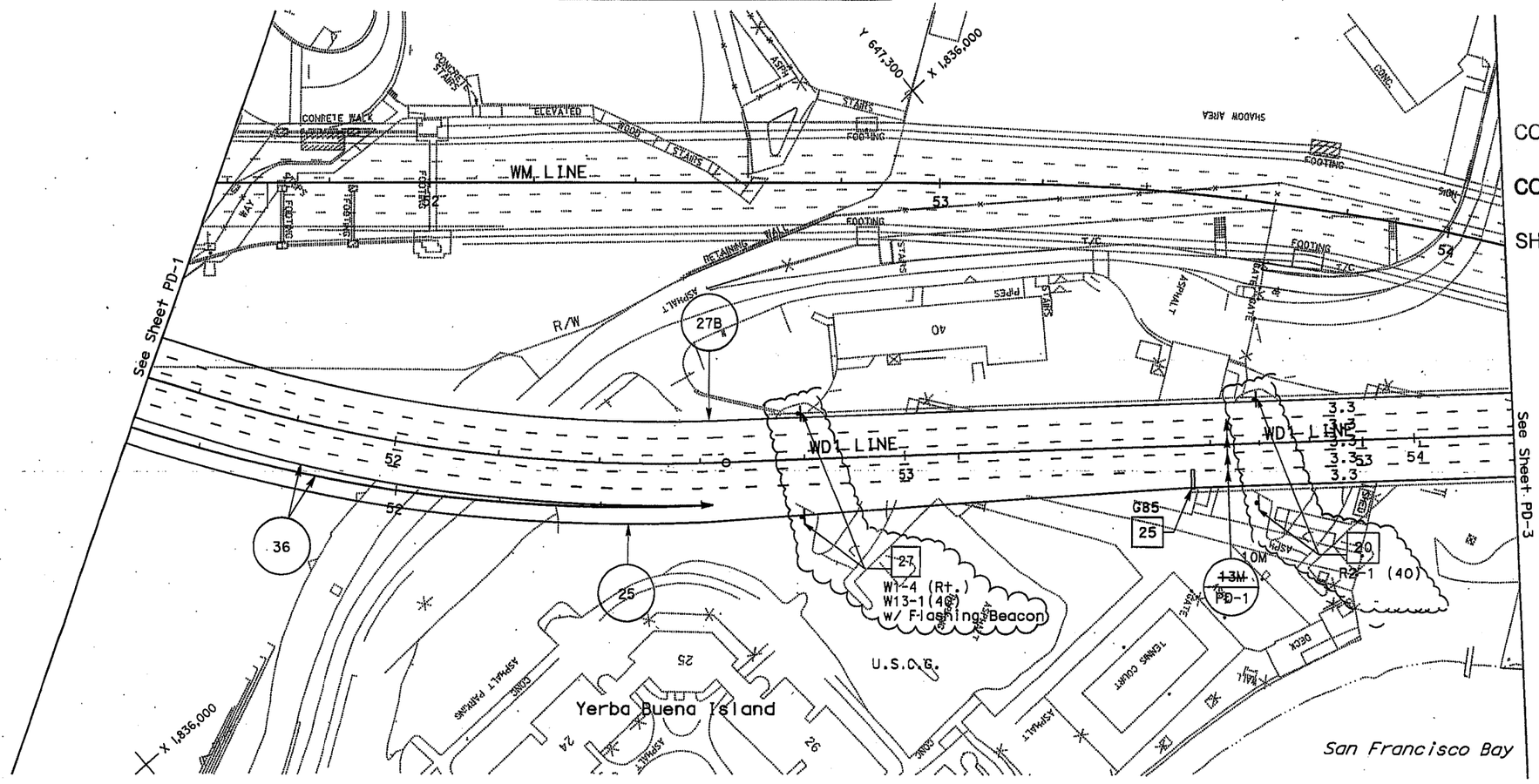

REGISTERED PROFESSIONAL ENGINEER CHEUK HONG WONG C 60145 EXP. 6/30/10 CIVIL STATE OF CALIFORNIA

WESTBOUND

WB 7/27/2009

PAVEMENT DELINEATION AND SIGN PLAN

SCALE: 1:500

THIS PLAN ACCURATE FOR PAVEMENT DELINEATION AND SIGNING WORK ONLY.

ALL DIMENSIONS ARE IN METERS UNLESS OTHERWISE SHOWN

PD-2R1

LAST REVISION 0-00-00 | DATE PLOTTED => 02-AUG-2009 | TIME PLOTTED => 21:10

DIST	COUNTY	ROUTE	KILOMETER POST TOTAL PROJECT	SHEET No	TOTAL SHEETS
04	SF	80	12.6/13.2	74	193

REGISTERED CIVIL ENGINEER

PLANS APPROVAL DATE

REGISTERED PROFESSIONAL ENGINEER — No. C60173 — Exp. 06/30/04 — CIVIL — STATE OF CALIFORNIA

The State of California or its officers or agents shall not be responsible for the accuracy or completeness of electronic copies of this plan sheet.

Caltrans now has a web site! To get to the web site, go to: http://www.dot.ca.gov

PARSONS BRINCKERHOFF QUADE & DOUGLAS, INC.
303 Second St., Suite 700N
San Francisco, CA 94107-1317

DATE	REVISED BY
2/03	DATE REVISED

CALCULATED/DESIGNED BY: R. Maxwell
CHECKED BY: T. Dougherty

DESIGN OVERSIGHT: Bob Zandipour

STATE OF CALIFORNIA - DEPARTMENT OF TRANSPORTATION
Caltrans

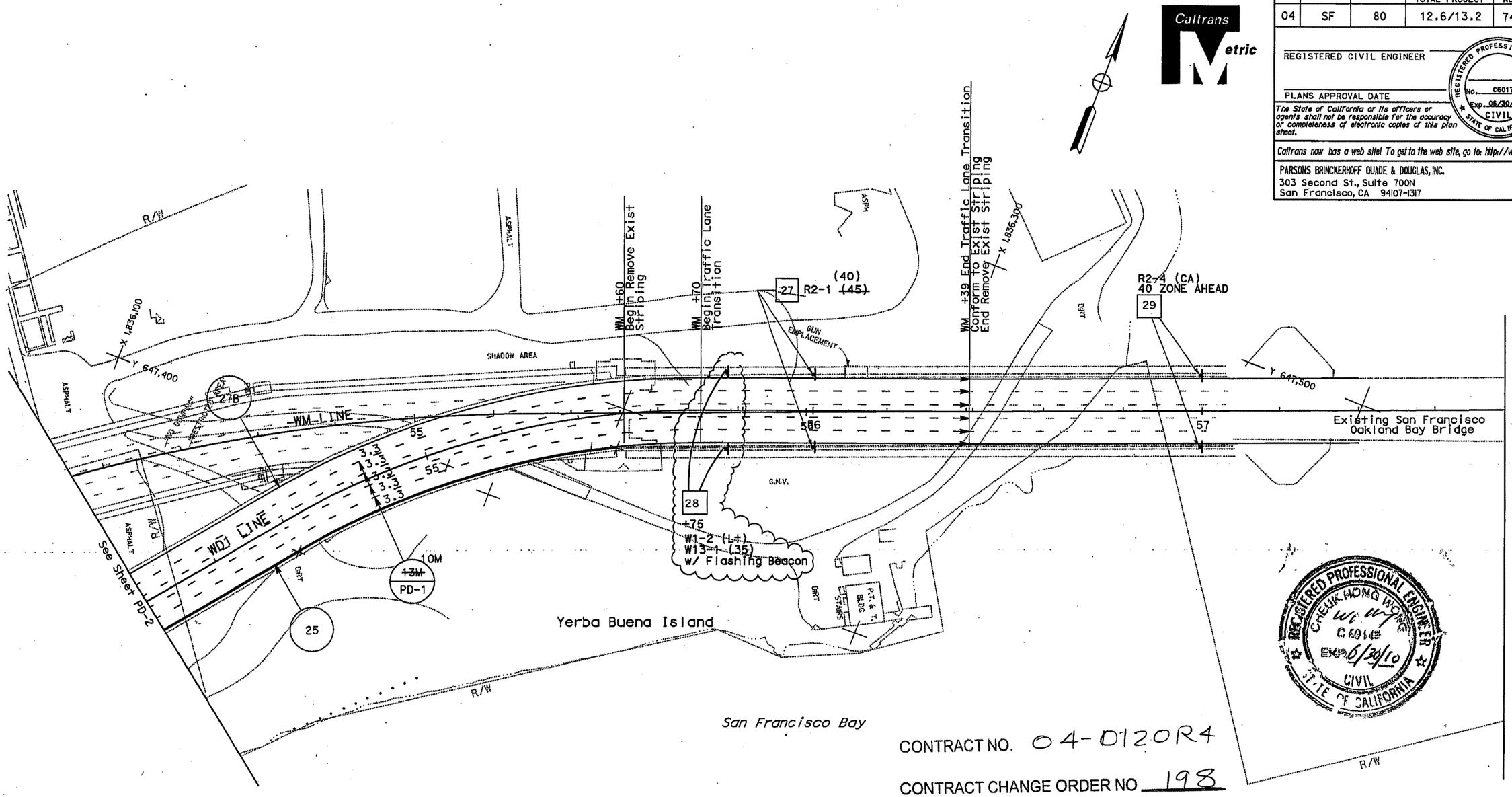

CONTRACT NO. 04-0120R4

CONTRACT CHANGE ORDER NO 198

SHEET 5 OF 12

WESTBOUND

REGISTERED PROFESSIONAL ENGINEER — CHEUK WONG WU — C 60146 — EXP 6/30/10 — CIVIL — STATE OF CALIFORNIA

Note: see Striping detail Layout for ETI striping layout

WB 7-27-2009

PAVEMENT DELINEATION AND SIGN PLAN

SCALE: 1:500

THIS PLAN ACCURATE FOR PAVEMENT DELINEATION AND SIGNING WORK ONLY.

ALL DIMENSIONS ARE IN METERS UNLESS OTHERWISE SHOWN

PD-3R2

LAST REVISION 0-00-00 | DATE PLOTTED => 02-AUG-2009 | TIME PLOTTED => 21:29

DIST	COUNTY	ROUTE	KILOMETER POST TOTAL PROJECT	SHEET No	TOTAL SHEETS
04	SF	80	12.6/13.2	75	193

REGISTERED CIVIL ENGINEER

3-31-03
PLANS APPROVAL DATE

REGISTERED PROFESSIONAL ENGINEER No. C60173 Exp. 08/30/04 CIVIL STATE OF CALIFORNIA

The State of California or its officers or agents shall not be responsible for the accuracy or completeness of electronic copies of this plan sheet.

Caltrans now has a web site! To get to the web site, go to: http://www.dot.ca.gov

PARSONS BRINCKERHOFF QUADE & DOUGLAS, INC.
303 Second St., Suite 700N
San Francisco, CA 94107-1317

CONTRACT NO. 04-0120R4

CONTRACT CHANGE ORDER NO 198

SHEET 6 OF 12

REGISTERED PROFESSIONAL ENGINEER CHEUK HONG WONG No. C60173 Exp. 6/30/10 CIVIL STATE OF CALIFORNIA

EB 7-27-2009
PAVEMENT DELINEATION AND SIGN PLAN

SCALE: 1:500

ALL DIMENSIONS ARE IN METERS UNLESS OTHERWISE SHOWN

THIS PLAN ACCURATE FOR PAVEMENT DELINEATION AND SIGNING WORK ONLY.

PD-4R2

DESIGN OVERSIGHT	CALCULATED/ DESIGNED BY	DRAWN BY	CHECKED BY	DATE	REVISED BY	DATE REVISED
Bob Zandipour		R. Maxwell	T. Dougherty	2/03		2/03

STATE OF CALIFORNIA - DEPARTMENT OF TRANSPORTATION
Caltrans

LAST REVISION 00-00-00 | DATE PLOTTED => 02-AUG-2009 | TIME PLOTTED => 21:17

DIST	COUNTY	ROUTE	KILOMETER POST TOTAL PROJECT	SHEET No	TOTAL SHEETS
04	SF	80	12.6/13.2	76	193

REGISTERED CIVIL ENGINEER

3-31-03

PLANS APPROVAL DATE

REGISTERED PROFESSIONAL ENGINEER — Koren Gemall I — No. C60173 — Exp. 06/30/04 — CIVIL — STATE OF CALIFORNIA

The State of California or its officers or agents shall not be responsible for the accuracy or completeness of electronic copies of this plan sheet.

Caltrans now has a web site! To get to the web site, go to: http://www.dot.ca.gov

PARSONS BRINCKERHOFF QUADE & DOUGLAS, INC.
303 Second St., Suite 700N
San Francisco, CA 94107-1317

CONTRACT NO. 04-0120R4

CONTRACT CHANGE ORDER NO 198

SHEET 7 OF 12

CALCULATED/ DESIGNED BY	R. Maxwell	DATE 2/03	REVISED BY
CHECKED BY	T. Dougherty	2/03	DATE REVISED

DESIGN OVERSIGHT — Bob Zandipour

STATE OF CALIFORNIA - DEPARTMENT OF TRANSPORTATION

EASTBOUND

REGISTERED PROFESSIONAL ENGINEER — CHEUK HONG WONG — C 60143 — Exp. 6/30/10 — CIVIL — STATE OF CALIFORNIA

EB 7-27-2009

PAVEMENT DELINEATION AND SIGN PLAN

SCALE: 1:500

THIS PLAN ACCURATE FOR PAVEMENT DELINEATION AND SIGNING WORK ONLY.

ALL DIMENSIONS ARE IN METERS UNLESS OTHERWISE SHOWN

PD-5R2

LAST REVISION 00-00-00 | DATE PLOTTED => 02-AUG-2009 | TIME PLOTTED => 21:24

DIST	COUNTY	ROUTE	KILOMETER POST TOTAL PROJECT	SHEET No	TOTAL SHEETS
04	SF	80	12.6/13.2	77	193

Caltrans Metric

REGISTERED CIVIL ENGINEER

3-31-03
PLANS APPROVAL DATE

REGISTERED PROFESSIONAL ENGINEER Karen Cammill No. C60173 Exp. 06/30/04 CIVIL STATE OF CALIFORNIA

The State of California or its officers or agents shall not be responsible for the accuracy or completeness of electronic copies of this plan sheet.

Caltrans now has a web site! To get to the web site, go to: http://www.dot.ca.gov

PARSONS BRINCKERHOFF QUADE & DOUGLAS, INC.
303 Second St., Suite 700N
San Francisco, CA 94107-1317

CALCULATED/ DESIGNED BY	R. Maxwell	DATE 2/03	REVISED BY
CHECKED BY	T. Dougherty	2/03	DATE REVISED

DESIGN OVERSIGHT: Bob Zandipour

STATE OF CALIFORNIA - DEPARTMENT OF TRANSPORTATION
Caltrans

CONTRACT NO. 04-0120R4

CONTRACT CHANGE ORDER NO 198

SHEET 8 OF 12

REGISTERED PROFESSIONAL ENGINEER CHEUK HONG WONG C 60145 EXP. 6/30/10 CIVIL STATE OF CALIFORNIA

EASTBOUND

Note: See Striping Layout detail for ETI area Striping

EB 7-27-2009
PAVEMENT DELINEATION AND SIGN PLAN

SCALE: 1:500

THIS PLAN ACCURATE FOR PAVEMENT DELINEATION AND SIGNING WORK ONLY.

ALL DIMENSIONS ARE IN METERS UNLESS OTHERWISE SHOWN

PD-6R1

LAST REVISION 0-00-00 | DATE PLOTTED => 03-AUG-2009 | TIME PLOTTED => 11:34

DIST	COUNTY	ROUTE	KILOMETER POST TOTAL PROJECT	SHEET No	TOTAL SHEETS
04	SF	80	12.6/13.2	78	193

Caltrans Metric

REGISTERED CIVIL ENGINEER

3-31-03

PLANS APPROVAL DATE

REGISTERED PROFESSIONAL ENGINEER Karen Gemill No. C60173 Exp. 06/30/04 CIVIL STATE OF CALIFORNIA

The State of California or its officers or agents shall not be responsible for the accuracy or completeness of electronic copies of this plan sheet.

Caltrans now has a web site! To get to the web site, go to: http://www.dot.ca.gov

PARSONS BRINCKERHOFF QUADE & DOUGLAS, INC.
303 Second St., Suite 700N
San Francisco, CA 94107-1317

7

12

PAVEMENT DELINEATION QUANTITIES

SHEET No.		Detail No. or Pavement Marking	Pavement Markers: Non-Reflective Type A EA	Pavement Markers: Retroreflective Type C EA	Pavement Markers: Retroreflective Type G EA	Pavement Markers: Retroreflective Type H EA	Thermoplastic Traffic Stripes: 100 mm Yellow Solid m	Thermoplastic Traffic Stripes: 100 mm White Solid m	Thermoplastic Traffic Stripes: 100 mm White Broken 4.57-2.74 m	Thermoplastic Traffic Stripes: 200 mm White Solid m	Thermoplastic Pavement Marking m^2
PD1R	WD1	25				17	233				
		27B						303			
		~~13M~~ 10M	~~497~~ 404	~~166~~ 88					~~1212~~ 440		
		36			20					140	
		TYPE V ARROW									15.3
	WB ON-RAMP	38			2					10	
	WDR1	25A				21	150				
		27B						80			
		TYPE V ARROW									6.12
PD2R	WD1 & WDR1	36			32					228	
	WD1 & WDR1	25				19	270				
	WD1	27B						270			
	WD1	~~13M~~ 10M	~~443~~ 664	~~148~~ 144					~~1080~~ 720		
PD3R1	WD1	25				16	220				
		27B						220			
		~~13M~~ 10M	~~361~~ 540	120					~~880~~ 588		
PD4R1	ED1	25				20	285				
		27B						285			
		~~13M~~ 10M	~~466~~ 404	~~155~~ 88					~~1136~~ 440		
PD4R1	EDR1	25A				13	90				
		27B						60			
		300 mm WHITE SOLID									3.6
		"STOP"									2.04
		TYPE V ARROW									3.06
PD5R1	ED1	25A				16	115				
		27B						385			
		25				19	270				
		~~13M~~ 10M	~~443~~ 664	~~148~~ 144					~~1080~~ 720		
PD6R	ED1	25				16	220				
		27B						220			
		~~13M~~ 10M	~~361~~ 540	120					~~880~~ 588		
	Subtotal		3216	704	54	157	1853	1823	3496	378	30.1
	Total		3216	915			3676		9 3496	378	30.1

REGISTERED PROFESSIONAL ENGINEER CHEUKHONG WONG D 60145 EXP. 6/30/10 CIVIL STATE OF CALIFORNIA

7 REVISED PER ADDENDUM NO. 7 DATED AUGUST 4, 2003

9 REVISED PER ADDENDUM NO. 9 DATED SEPTEMBER 4, 2003

12 REVISED PER ADDENDUM NO. 12 DATED OCTOBER 20, 2003

CONTRACT NO.

CONTRACT CHANGE ORDER NO 198

SHEET 9 OF 12

Date: 7-14-2009

PAVEMENT DELINEATION QUANTITIES

PD-7R

STATE OF CALIFORNIA - DEPARTMENT OF TRANSPORTATION

Caltrans

DESIGN OVERSIGHT: Bob Zandipour

CALCULATED/DESIGNED BY: R. Maxwell | CHECKED BY: T. Dougherty | DATE 2/03 | REVISED BY: RM | DATE REVISED 3/03

RELATIVE BORDER SCALE IS IN MILLIMETERS 0 20 40 60 80

DGN FILE => 40120rn07r1.dgn USERNAME => s129303

CU 04251

EA 0120R1

LAST REVISION 00-00-00 DATE PLOTTED => 16-JUL-2009 TIME PLOTTED => 10:21

ROAD SIDE SIGNS

SHEET No. (S)	SIGN No.	CODE	SIGN MESSAGE	PANEL SIZE (mm)	~~No. OF POST - SIZE~~ # of Post - Size - Length	Metal (Mounted Sign) (EA) ~~(kg)~~ (N)	EA	REMARKS
			WB-80 Off-Ramp Detour				12	
PD-~~1~~R2R1	20	R2-1 (40) ~~R2-1 (50)~~	SPEED ~~50 MPH~~ 40 MPH	1219 x 1524	1-140 mm x 140 mm - 4.1m		2	
PD-1R1	23	G84	Exit Sign	1372 x 1219		1(*)	1	Barrier Mounted
PD-1R1	24	W72 (20)	EXIT 20 MPH	1219 x 1524		1(*)	1	Barrier Mounted
7 PD-~~1~~2R1	25	G85	Treasure Island Yerba Buena Island Angle Up Arrow	7000 x 3048			(N) 1	Overhead Sign Contractor Design
PD-2R1	27	W1-4 (Rt) W13-1 (40)	7 Reverse Curve Sign (Right) ~~SPEED LIMIT 40 MPH~~ 40 MPH	914 x 914 762 x 762		1(*)	2	Barrier Mounted w/ Flashing Beacon
PD-3R2	27	R2-1 (40)	SPEED LIMIT ~~45 MPH~~ 40 MPH	1219 x 1524			2	~~Barrier Mounted~~ SSBM
PD-3R2	28	W1-~~4~~2 (Lt) W13-1(~~40~~35)	~~Reverse~~ Curve Sign (Left) 35 ~~40~~ MPH	914 x 914 762 x 762			2	SSBM w/ Flashing Beacon
PD-3R2	29	R2-4 (CA)	40 MPH ZONE AHEAD	1219 x 1524			2	SSBM
PD-4R2	30	W1-4 (Rt) W13-1(40)	Reverse Curve Sign (Right) 40 MPH	914 x 914 762 x 762	1-140 mm x 140 mm - 4.1m		2	w/ Flashing Beacon
			EB-80 Detour					
PD-4R2	43	Special Special G27(80) G49 G43	TOLL CROSSING ENTRANCE FREE DIRECTION I-80 EAST Route Shield Arrow Plate	1219 x 1016 1219 x 762 356 x 305 533 x 229 533 x 381	2-140 mm x 140 mm - 4.1m		1	Relocate Sign
PD-4R2	44	Special Special G27(80) G49 G44	TOLL CROSSING ENTRANCE FREE DIRECTION I-80 EAST Route Shield Arrow Plate	1219 x 1016 1219 x 762 356 x 356 533 x 229 533 x 381	2-140 mm x 140 mm-4.1m		1	Relocate Sign
PD-4R2	45	R44	PEDESTRIANS BICYCLES PROHIBTIED	711 x 889	1-89 mm x 140 mm 4.1 m		1	Relocate Sign
PD-4R2	54	W3 (Rt) W6(15)	Turn sign (right) 15 MPH	914 x 914 762 x 762	1-140 mm x 140 mm -4.1m		1	
PD-4R2	55	W81 (Rt)	Chevron Alignment Sign (right)	762 x 914	1 - 89 mm x 140 mm-4.1m		3	
PD-4R2	46	W59	Merge Sign	914 x 914	1 - 89 mm x 140 mm-4.1m		1	
~~PD-4R1~~	~~51~~	~~R2-1 (40)~~	7 ~~SPEED LIMIT 35 MPH~~ 40	~~1219 x 1524~~	~~1-140 mm x 140 mm - 4.1m~~		~~2~~	
PD-5R2	51	R2-1 (40)	SPEED LIMIT 40	1219 X 1524		1(*)	2	Barrier Mounted
PD-4R2	52	R2-1 (40)	SPEED LIMIT 40	1219 X 1524	1-140 mm x 140 mm - 4.1m		2	
PD-4R2	52	R2-4 (CA)	40 MPH ZONE AHEAD	1219 X 1524			2	SSBM
PD-6R1	56	W1-2 (Rt) W13-1(35)	Curve Sign (Right) 40 MPH	914 x 914		1(*)	2	Barrier Mounted w/ Flashing Beacon
PD-6R1	57	C14		914 x 914			2	SSBM

* Rail Mounted or Barrier Mounted 12

PD-4R1	38	C2	Road Closed	914 x 610		(N) 1 Mount Sign on Barricade
PD-5R1	6	C2 C5(Rt)	Road Closed Detour (Right)	914 x 610 1219 x 457		(N) 2 Mount Sign on Barricade

7 (N) Not a separate pay item, for information only. 12

7 REVISED PER ADDENDUM NO. 7 DATED AUGUST 4, 2003

9 REVISED PER ADDENDUM NO. 9 DATED SEPTEMBER 4, 2003

12 REVISED PER ADDENDUM NO. 12 DATED OCTOBER 20, 2003

Metric

DIST	COUNTY	ROUTE	KILOMETER POST TOTAL PROJECT	SHEET No	TOTAL SHEETS
04	SF	80.	12.6/13.2	79	193

REGISTERED CIVIL ENGINEER

3-31-03

PLANS APPROVAL DATE

REGISTERED PROFESSIONAL ENGINEER Karen Gemill No. C60173 Exp. 06/30/04 CIVIL STATE OF CALIFORNIA

The State of California or its officers or agents shall not be responsible for the accuracy or completeness of electronic copies of this plan sheet.

Caltrans now has a web site! To get to the web site, go to: http://www.dot.ca.gov

PARSONS BRINCKERHOFF QUADE & DOUGLAS, INC.
303 Second St., Suite 700N
San Francisco, CA 94107-1317

CONTRACT NO. 04-0120R4

CONTRACT CHANGE ORDER NO 198

SHEET 10 OF 12

REGISTERED PROFESSIONAL ENGINEER Chi-Kuk Hong Wang C 60145 EXP. 6/30/10 CIVIL STATE OF CALIFORNIA

date 7-27-2009

SIGN QUANTITIES

PD-8R1

STATE OF CALIFORNIA - DEPARTMENT OF TRANSPORTATION

CALCULATED/DESIGNED BY: R. Maxwell | DATE 2/03 | REVISED BY: RM | DATE REVISED 3/03

CHECKED BY: T. Dougherty | 2/03

DESIGN OVERSIGHT: Bob Zandipour

Caltrans

LAST REVISION 00-00-00 | DATE PLOTTED => 03-AUG-2009 | TIME PLOTTED => 11:33

RELATIVE BORDER SCALE IS IN MILLIMETERS 0 20 40 60 80

DGN FILE => 0120rn08r1.dgn
USERNAME => s129303

CU 04251 | EA 0120R1

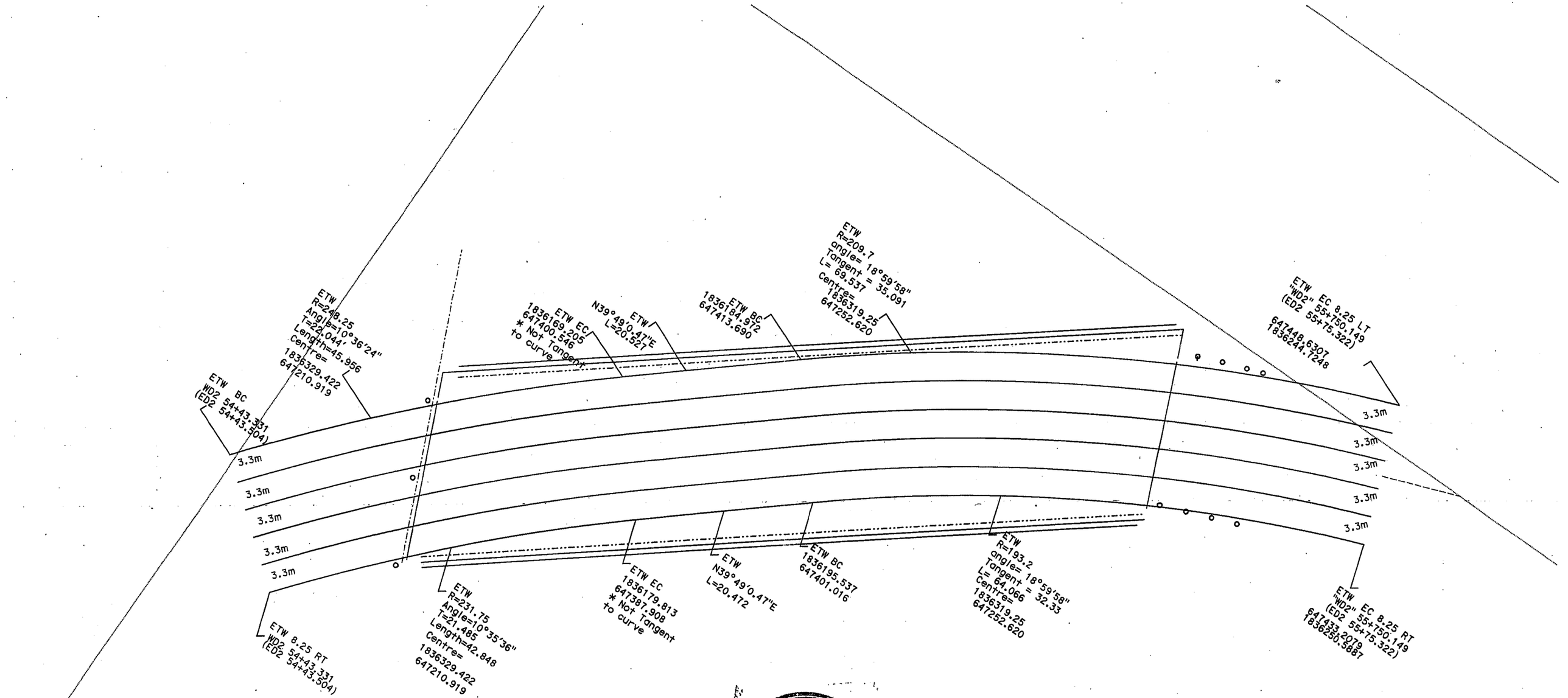

REGISTERED PROFESSIONAL ENGINEER
CHEUK HONG WONG
C 60145
EXP. 6/30/10
CIVIL
STATE OF CALIFORNIA

ETI Striping Layout
EB/WB
7/27/2009

CONTRACT NO. 04-0120R4

CONTRACT CHANGE ORDER NO 198

SHEET 11 OF 12

CONTRACT NO. 04-0120R4

CONTRACT CHANGE ORDER NO 198

SHEET 12 OF 12

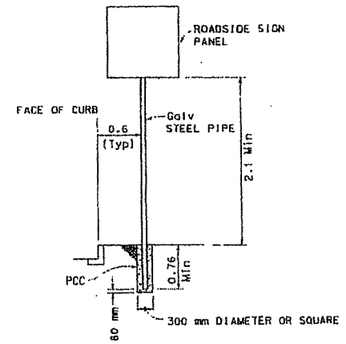

TYPICAL DETAIL FOR GSP

NOT TO SCALE

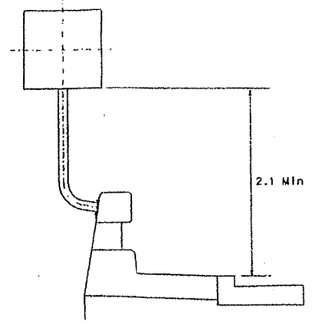

SIGN PIPE CONNECTION TO BARRIER

NOT TO SCALE

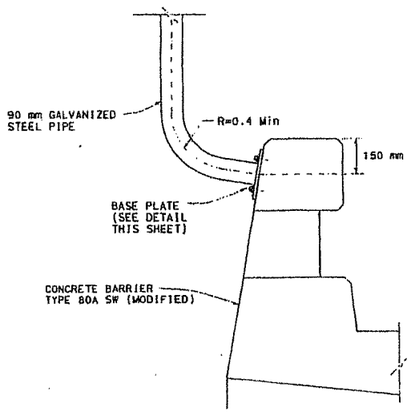

SIGN PIPE CONNECTION TO BARRIER

NOT TO SCALE

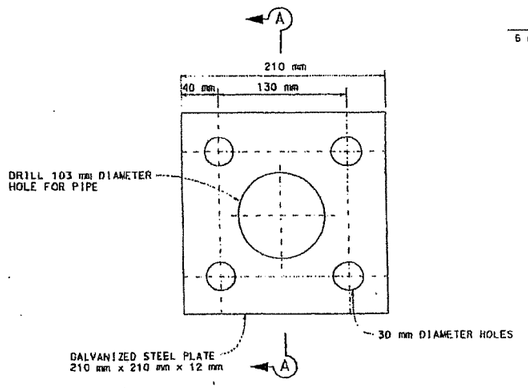

BASE PLATE DETAIL

SCALE 1:4

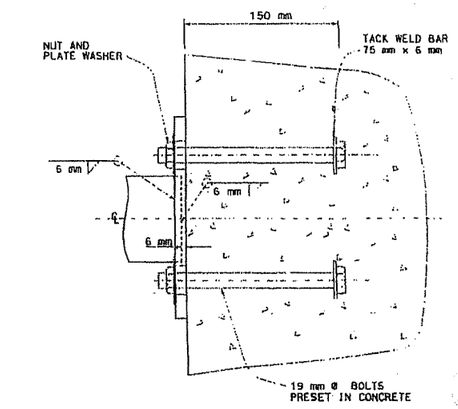

SECTION A-A

SCALE 1:4

ALL DIMENSIONS ARE IN METERS UNLESS OTHERWISE SHOWN

SIGN DETAILS

SCALE AS SHOWN

REGISTERED PROFESSIONAL ENGINEER
ALEC MELKONIANS
C053452
Exp. 6/30/11
CIVIL
STATE OF CALIFORNIA

CALCULATED/ DESIGNED BY	DATE	REVISED BY	DATE REVISED
CHECKED BY	KDT	05-02	05-02

DESIGN OVERSIGHT — EMMANUEL CALUYA

STATE OF CALIFORNIA — DEPARTMENT OF TRANSPORTATION

Caltrans

FOR REDUCED PLANS ORIGINAL SCALE IS IN MILLIMETERS

STATE OF CALIFORNIA - DEPARTMENT OF TRANSPORTATION

CONTRACT CHANGE ORDER MEMORANDUM

DATE: 9/3/2009

TO: MIKE FORNER / DEANNA VILCHECK	FILE: E.A. 04 - 0120R4
	CO-RTE-PM SF-80-12.6/13.2
FROM: BILL CASEY	FED. NO. ACBRIM-080-1(097)N
CCO#: 198 SUPPLEMENT#: 0 Category Code: CKPA	CONTINGENCY BALANCE (incl. this change) $55,955,116.59
COST: $299,463.00 INCREASE ☑ DECREASE ☐	HEADQUARTERS APPROVAL REQUIRED? ☑ YES ☐ NO
SUPPLEMENTAL FUNDS PROVIDED: $0.00	IS THIS REQUEST IN ACCORDANCE WITH ENVIRONMENTAL DOCUMENTS? ☑ YES ☐ NO
CCO DESCRIPTION: Revised Job wide Striping and Signing	**PROJECT DESCRIPTION:** CONSTRUCT ROUTE 80 TEMP BYPASS STRUCTURE

Original Contract Time:	Time Adj. This Change:	Previously Approved CCO Time Adjustments:	Percentage Time Adjusted: (including this change)	Total # of Unreconciled Deferred Time CCO(s): (including this change)
475 Day(s)	0 Day(s)	0 Day(s)	0 %	0

THIS CHANGE ORDER PROVIDES FOR:

Performing the striping and delineation including installing barricades, and signing of the entire project, relocating a crash cushion, and installing crash cushions at three locations. All this work will be performed based on revised plan sheets and at a newly adjusted price.

This change order was initiated due to the change in the scope of the project and also as a consequence to delays in the execution of the project. The Contract was awarded in March of 2004 and the striping and signing work was envisioned to be completed before July 2005. The work now in this change order is expected to be done during 2009. This significant delay caused the contract item prices to be irrelevant due to inflation.

Caltrans design changed the scope to this project including design enhancements that changed items related to the striping, delineation, and signing of the entire project.

This change order eliminates the original contract items related to the work, as stated in the change order. Elimination of contract items decreases the relevant contract items at contract prices for a net decrease of $112,789.00. Compensation for all the work per the final design in the change order shall be paid as extra work at agreed lump price of $412,252.00.

The net change order cost of $299,463.00 shall be financed from the contingency funds. A cost analysis and backup information verifying the agreed price is on file in the project records.

No adjustment of contract time is warranted, as the work will not affect the controlling operation.

This change was concurred by Hong Wong, Project Engineer.

Maintenance concurrence is required as the work does affect roadway features.

CONCURRED BY:

Construction Engineer:	Jeannie Balderramos	Date 9-3-09
Bridge Engineer:	Bill Casey, Resident Engineer	Date
Project Engineer:	Hong Wong, PE	Date 9/5/09
Project Manager:	Ale Melkonians.	Date 9/3/09
FHWA Rep.:		Date
Environmental:		Date
Other (specify):		Date
Other (specify):		Date
District Prior Approval By:		Date
HQ (Issue Approve) By:	Bob Molera	Date 9/8/09
Resident Engineer's Signature:	for Bill Casey Deanna Vilcheck	Date 9/3/09

ESTIMATE OF COST

	THIS REQUEST	TOTAL TO DATE
ITEMS	($112,789.00)	($112,789.00)
FORCE ACCOUNT	$0.00	$0.00
AGREED PRICE	$412,252.00	$412,252.00
ADJUSTMENT	$0.00	$0.00
TOTAL	$299,463.00	$299,463.00

FEDERAL PARTICIPATION

☐ PARTICIPATING ☐ PARTICIPATING IN PART ☑ NONE
☐ NON-PARTICIPATING (MAINTENANCE) ☐ NON-PARTICIPATING

FEDERAL SEGREGATION (if more than one Funding Source or P.I.P. type)
☐ CCO FUNDED PER CONTRACT ☐ CCO FUNDED AS FOLLOWS

FEDERAL FUNDING SOURCE	PERCENT

ADA Notice: For individuals with sensory disabilities, this document is available in alternate formats. For information call: (916) 654-6410 or TDD (916) 654-3880 or write

STATE OF CALIFORNIA - DEPARTMENT OF TRANSPORTATION

CONTRACT CHANGE ORDER

Change Requested by: Engineer

CCO 200	Suppl. No. 0	Contract No. 04 - 0120R4	Road SF-80-12.6/13.2	FED. AID LOC.:

To: **CC MYERS INC**

You are directed to make the following changes from the plans and specifications or do the following described work not included in the plans and specifications for this contract. ***NOTE: This change order is not effective until approved by the Engineer.***

Description of work to be done, estimate of quantities and prices to be paid. (Segregate between additional work at contract price, agreed price and force account.) Unless otherwise stated, rates for rental of equipment cover only such time as equipment is actually used and no allowance will be made for idle time. This last percentage shown is the net accumulated increase or decrease from the original quantity in the Engineer's Estimate.

Extra Work at Force Account:

Provide for the installation and removal of temporary shoring necessary for the construction of Abutment 47A of the West Tie-In portion of the Temporary Bypass Structure (Bridge No. 34-0006 (TEMP).

Estimated Cost of Extra Work at Force Account $50,000.00

Estimated Cost: **Increase** ☑ **Decrease** ☐ **$50,000.00**

By reason of this order the time of completion will be adjusted as follows: 0 days

Submitted by		
Signature	**Resident Engineer** BILL CASEY	**Date** 10-20-09
Approval Recommended by		
Signature Deanna Vilcheck	**Area Construction Manager** DEANNA VILCHECK	**Date** 10/20/09
Engineer Approval by		
Signature Deanna Vilcheck	**Area Construction Manager** DEANNA VILCHECK	**Date** 11/17/09

We the undersigned contractor, have given careful consideration to the change proposed and agree, if this proposal is approved, that we will provide all equipment, furnish the materials, except as may otherwise be noted above, and perform all services necessary for the work above specified, and will accept as full payment therefor the prices shown above.

NOTE: If you, the contractor, do not sign acceptance of this order, your attention is directed to the requirements of the specifications as to proceeding with the ordered work and filing a written protest within the time therein specified.

Contractor Acceptance by		
Signature	**(Print name and title)** STEVE FRANCIS, CHIEF ESTIMATOR	**Date** 11-6-09

STATE OF CALIFORNIA - DEPARTMENT OF TRANSPORTATION

CONTRACT CHANGE ORDER MEMORANDUM

TO: MIKE FORNER / DEANNA VILCHECK	FILE: **E.A.** 04 - 0120R4
FROM: BILL CASEY	**CO-RTE-PM** SF-80-12.6/13.2
	FED. NO.
CCO#: **200** SUPPLEMENT#: **0** Category Code: **CHPR**	CONTINGENCY BALANCE (incl. this change) **$48,380,841.59**
COST: **$50,000.00** INCREASE ☑ DECREASE ☐	HEADQUARTERS APPROVAL REQUIRED? ☐ YES ☑ NO
SUPPLEMENTAL FUNDS PROVIDED: **$0.00**	IS THIS REQUEST IN ACCORDANCE WITH ENVIRONMENTAL DOCUMENTS? ☑ YES ☐ NO
CCO DESCRIPTION: WTI Abutment 47A Shoring	**PROJECT DESCRIPTION:** CONSTRUCT ROUTE 80 TEMP BYPASS STRUCTURE

Original Contract Time:	Time Adj. This Change:	Previously Approved CCO Time Adjustments:	Percentage Time Adjusted: (including this change)	Total # of Unreconciled Deferred Time CCO(s): (including this change)
475 Day(s)	**0** Day(s)	**1660** Day(s)	**349** %	**7**

THIS CHANGE ORDER PROVIDES FOR:

The installation and removal of temporary shoring necessary for the construction of Abutment 47A of the West Tie-In structure.

This project, the Yerba Buena Island Detour (YBID), calls for the construction of a temporary detour for both eastbound and westbound I-80 traffic that will allow for the tie in of the new east span of the San Francisco Oakland Bay Bridge to Yerba Buena Island. The YBID encompasses three main structures, the East Tie-In to the existing bridge, the West Tie-In (WTI) to Yerba Buena Island, and the Viaduct structure between the two tie ins.

Two separate Department strategy memorandums, dated December 14, 2006 and December 25, 2006, approved by Tony Anziano - Toll Bridge Program Manager and Richard Land - Chief Engineer, recommended that the Department assume responsibility for the designs of the East Tie-In (ETI) and West Tie-In (WTI) portions of this contract, and incorporated seismic retrofit work of the permanent Yerba Buena Island Transition Structure (YBITS) onto this project.

Change Order No. 62 was issued to provide for the structural excavation and construction of CIDH piles for the West Tie-In structure. This change order compensated the contractor for specific temporary shoring required for the excavation of Bents 46 and 47. The change order provided that any additional temporary shoring required for the work would be paid separately as the full extent of any other shoring requirements was unknown at the time.

It has now been determined that temporary shoring shall be required for the excavation associated with Abutment 47A which was excluded under Change Order No. 62. This change order provides compensation for the installation and removal of that shoring.

Compensation for the work of this change shall be paid as an extra work at force account at an estimated cost of $50,000.00 which shall be financed from the contract's contingency funds. A cost estimate is on file.

No adjustment of contract time is warranted as the work will not affect the controlling operation.

This change was concurred with by Alec Melkonians - Asst. Project Manager and Minh B. Nguyen - Project Engineer.

Maintenance concurrence is not required as this change doesn't affect any permanent roadway features.

ADA Notice: For individuals with sensory disabilities, this document is available in alternate formats. For information call: (916) 654-6410 or TDD (916) 654-3880 or write Records and Forms Management, 1120 N Street, MS-89, Sacramento, CA 95814.

CONCURRED BY:		
Construction Engineer:	Bill Casey, Resident Engineer	Date 10/20/09
Bridge Engineer:		Date
Project Engineer:	Minh B. Nguyen, PE	Date 11/18/09
Project Manager:	Alec Melkonians	Date 11/18/09
FHWA Rep.:		Date
Environmental:		Date
Other (specify):		Date
Other (specify):		Date
District Prior Approval By:		Date
HQ (Issue Approve) By:		Date
Resident Engineer's Signature:		Date 10-20-09

ESTIMATE OF COST

	THIS REQUEST	TOTAL TO DATE
ITEMS	$0.00	$0.00
FORCE ACCOUNT	$50,000.00	$50,000.00
AGREED PRICE	$0.00	$0.00
ADJUSTMENT	$0.00	$0.00
TOTAL	$50,000.00	$50,000.00

FEDERAL PARTICIPATION

☐ PARTICIPATING ☐ PARTICIPATING IN PART ☑ NONE
☐ NON-PARTICIPATING (MAINTENANCE) ☐ NON-PARTICIPATING

FEDERAL SEGREGATION (if more than one Funding Source or P.I.P. type)
☐ CCO FUNDED PER CONTRACT ☐ CCO FUNDED AS FOLLOWS

FEDERAL FUNDING SOURCE	PERCENT

ADA Notice: For individuals with sensory disabilities, this document is available in alternate formats. For information call: (916) 654-6410 or TDD (916) 654-3880 or write Records and Forms Management, 1120 N Street, MS-89, Sacramento, CA 95814.

STATE OF CALIFORNIA - DEPARTMENT OF TRANSPORTATION

CONTRACT CHANGE ORDER

Change Requested by: Engineer

CCO 201	Suppl. No. 0	Contract No. 04 - 0120R4	Road SF-80-12.6/13.2	FED. AID LOC.: ACBRIM-080-1(097)N

To: CC MYERS INC

You are directed to make the following changes from the plans and specifications or do the following described work not included in the plans and specifications for this contract. ***NOTE: This change order is not effective until approved by the Engineer.***

Description of work to be done, estimate of quantities and prices to be paid. (Segregate between additional work at contract price, agreed price and force account.) Unless otherwise stated, rates for rental of equipment cover only such time as equipment is actually used and no allowance will be made for idle time. This last percentage shown is the net accumulated increase or decrease from the original quantity in the Engineer's Estimate.

Adjustment of Compensation at Lump Sum:

In accordance with Section 4-1.03 "Changes" of the contract Standard Specifications, provide compensation to the Contractor for additional costs incurred by the Contractor's subcontractor Danny's Construction Company, Inc. (DCCI) pertaining to furnishing and installing additional safety netting during the erection of the steel truss of the Viaduct of the Temporary Bypass Structure (Bridge No. 34-0006 (TEMP)) due to all Department design enhancements incorporated into the truss.

For this work, the Contractor will be compensated a lump sum of $156,350.00. This sum constitutes full and final compensation for all additional costs, including all markups, associated with this work.

Total Cost of Adjustment of Compensation at Lump Sum $156,350.00

RECEIVED
08-100 960110

Estimated Cost: Increase ☑ Decrease ☐ **$156,350.00**

By **reason of this order the time of completion will be adjusted as follows:** 0 days

Submitted by		
Signature	**Resident Engineer** BILL CASEY	**Date** 7-3-09
Approval Recommended by		
Signature Deanna Vilcheck	**Area Construction Manager** DEANNA VILCHECK	**Date** 9/6/09
Engineer Approval by		
Signature Deanna Vilcheck	**Area Construction Manager** DEANNA VILCHECK	**Date** 10/7/09

We the undersigned contractor, have given careful consideration to the change proposed and agree, if this proposal is approved, that we will provide all equipment, furnish the materials, except as may otherwise be noted above, and perform all services necessary for the work above specified, and will accept as full payment therefor the prices shown above.

NOTE: If you, the contractor, do not sign acceptance of this order, your attention is directed to the requirements of the specifications as to proceeding with the ordered work and filing a written protest within the time therein specified.

Contractor Acceptance by		
Signature	**(Print name and title)** DANIEL E. HUMICK, PRESIDENT	**Date** 10/02/09

STATE OF CALIFORNIA - DEPARTMENT OF TRANSPORTATION

CONTRACT CHANGE ORDER MEMORANDUM

TO: MIKE FORNER / DEANNA VILCHECK	FILE: E.A. 04 - 0120R4
	CO-RTE-PM SF-80-12.6/13.2
FROM: BILL CASEY	FED. NO. ACBRIM-080-1(097)N
CCO#: **201** SUPPLEMENT#: **0** Category Code: **CHPA**	CONTINGENCY BALANCE (incl. this change) **$34,422,655.59**
COST: **$156,350.00** INCREASE ☑ DECREASE ☐	HEADQUARTERS APPROVAL REQUIRED? ☑ YES ☐ NO
SUPPLEMENTAL FUNDS PROVIDED: **$0.00**	IS THIS REQUEST IN ACCORDANCE WITH ENVIRONMENTAL DOCUMENTS? ☑ YES ☐ NO
CCO DESCRIPTION: Additional Viaduct Safety Netting	**PROJECT DESCRIPTION:** CONSTRUCT ROUTE 80 TEMP BYPASS STRUCTURE

Original Contract Time:	Time Adj. This Change:	Previously Approved CCO Time Adjustments:	Percentage Time Adjusted: (including this change)	Total # of Unreconciled Deferred Time CCO(s): (including this change)
475 Day(s)	**0** Day(s)	**1195** Day(s)	**252** %	**7**

THIS CHANGE ORDER PROVIDES FOR:

compensation to the contractor for costs associated with furnishing and installing additional safety netting for the steel erection of the Viaduct structure.

This project, the Yerba Buena Island Detour (YBID), calls for the construction of a temporary detour for both eastbound and westbound I-80 traffic that will allow for the tie in of the new east span of the San Francisco Oakland Bay Bridge to Yerba Buena Island. The YBID encompasses three main structures, the East Tie-In to the existing bridge, the West Tie-In (WTI) to Yerba Buena Island, and the Viaduct structure between the two tie ins. The contract was awarded as a performance-based project with the contractor responsible for meeting the design criteria specified in the contract.

This change order concerns costs pertaining to furnishing and installing additional safety netting required due to Department design enhancements to the Viaduct structure. The Viaduct consists of 4 spans of a double deck steel truss approximately 20 meters wide and 320 meters long with a weight of over 4,300 metric tons.

In order to satisfy the Department that the safety of the traveling public would be fully addressed, the Office of Structures Design requested several design enhancements to the steel truss. It was also determined in the Department's December 14, 2006 strategy memo that the Viaduct should be designed as a stand alone structure due to the anticipated lag in the completion of the ETI and WTI structures. This memo was approved by Tony Anziano - Toll Bridge Program Manager, Richard Land - Chief Engineer, and subsequently by the Toll Bridge Program Oversight Committee (TBPOC).

These enhancements were implemented by the Contractor's designer under Contract Change Orders No. 49, No. 50, No. 60, and No. 67 and were incorporated into the contractor's approved viaduct plan sheets as summarized below:

1) Changes to the stringer and floor beam connections.
2) The addition of bent caps at Bents 49 through 52 including stopper blocks and brackets.
3) Changes to the top lateral bracing and connections.
4) Changes to the vertical members.
5) Changes to the truss joint details.
6) Changes to the interface at the conform to the ETI structure.

These changes resulted in extending the duration of the Contractor's steel erection and limited their ability to perform pre-erection on the ground verses erecting most of the steel in place approximately 150 feet in the air. Each of these items acted to increase both the amount of safety netting required for the work and the duration that the safety netting would need to be in place. The netting was required along the southern end of the structure to protect United States Coast Guard traffic adjacent to the structure.

This change order provides compensation for the additional costs incurred concerning the safety netting due to the Department changes to the work.

Compensation shall be paid as an adjustment of compensation at an agreed lump sum of $156,350.00 which shall be financed from the contract's contingency funds. A detailed cost estimate is on file.

ADA Notice: For individuals with sensory disabilities, this document is available in alternate formats. For information call: (916) 654-6410 or TDD (916) 654-3880 or write Records and Forms Management, 1120 N Street, MS-89, Sacramento, CA 95814.

No adjustment of contract time is warranted as the work will not affect the controlling operation.

This change was concurred with by Alec Melkonians - Asst. Project Manager and Hong Wong - Project Engineer.

Maintenance concurrence is not required as the safety netting doesn't affect any permanent roadway features.

CONCURRED BY:			
Construction Engineer:	Bill Casey, Resident Engineer	Date	7-2-09
Bridge Engineer:		Date	
Project Engineer:	Hong Wong, PE	Date	7/1/09
Project Manager:	Alec Melkonians	Date	7/1/09
FHWA Rep.:		Date	
Environmental:		Date	
Other (specify):		Date	
Other (specify):		Date	
District Prior Approval By:		Date	
HQ (Issue Approve) By:	Bob Molera, HQ CCO Engineer	Date	
Resident Engineer's Signature:		Date	7-3-09

ESTIMATE OF COST

	THIS REQUEST	TOTAL TO DATE
ITEMS	$0.00	$0.00
FORCE ACCOUNT	$0.00	$0.00
AGREED PRICE	$0.00	$0.00
ADJUSTMENT	$156,350.00	$156,350.00
TOTAL	$156,350.00	$156,350.00

FEDERAL PARTICIPATION

☐ PARTICIPATING ☐ PARTICIPATING IN PART ☑ NONE
☐ NON-PARTICIPATING (MAINTENANCE) ☐ NON-PARTICIPATING

FEDERAL SEGREGATION (if more than one Funding Source or P.I.P. type)
☐ CCO FUNDED PER CONTRACT ☐ CCO FUNDED AS FOLLOWS

FEDERAL FUNDING SOURCE	PERCENT

ADA Notice: For individuals with sensory disabilities, this document is available in alternate formats. For information call: (916) 654-6410 or TDD (916) 654-3880 or write Records and Forms Management, 1120 N Street, MS-89, Sacramento, CA 95814.

CONTRACT CHANGE ORDER

Change Requested by: Engineer

CCO 202	Suppl. No. 0	Contract No. 04 - 0120R4	Road SF-80-12.6/13.2	FED. AID LOC.: ACBRIM-080-1(097)N

To: **CC MYERS INC**

You are directed to make the following changes from the plans and specifications or do the following described work not included in the plans and specifications for this contract. ***NOTE: This change order is not effective until approved by the Engineer.***

Description of work to be done, estimate of quantities and prices to be paid. (Segregate between additional work at contract price, agreed price and force account.) Unless otherwise stated, rates for rental of equipment cover only such time as equipment is actually used and no allowance will be made for idle time. This last percentage shown is the net accumulated increase or decrease from the original quantity in the Engineer's Estimate.

1) Construct the CIP transition concrete barriers for the East Tie In structure as shown on Sheets No. 3 through 9 of this change order.

2) Furnish and install the concrete barrier (Type K) for the East Tie In structure as shown on Sheets No. 3 through 9 of this change order.

3) Delete the original contract bid item quantity for furnishing and installing the concrete barrier (Type K) for the West Tie In structure.

The plan sheets issued under this change order supersede any previously issued plan sheets pertaining to the East Tie-In concrete barrier.

Estimate of Decrease in Contract Item at Contract Price:

Item No. 68: CONCRETE BARRIER (TYPE K)

-560 M	(–100.00%)	$75.00	/M	=	–$42,000.00 (–100.00%)

In accordance with Section 4-1.03B(3), "Eliminated Items," of the Standard Specifications, the adjustment due to the elimination of Item #68, Concrete Barrier (Type K), is zero.

Total Cost for Decrease in Contract Item.....($42,000.00)

All work pertaining to constructing the CIP transition concrete barrier and furnishing and installing the concrete barrier (Type K) as shown on Sheets No. 3 through 9 of this change order shall be paid as extra work at force account under Change Order No. 204.

All work pertaining to furnishing and installing the concrete barrier (Type K) as shown on Sheets No. 7 and 8 of Change Order No. 143 shall be paid as extra work at force account under Change Order No. 204

CONTRACT CHANGE ORDER

Change Requested by: Engineer

CCO 202	Suppl. No. 0	Contract No. 04 - 0120R4	Road SF-80-12.6/13.2	FED. AID LOC.: ACBRIM-080-1(097)N

RECEIVED
011553 FEB -3 09

Estimated Cost: Increase ☐ Decrease ☑ ($42,000.00)

By reason of this order the time of completion will be adjusted as follows: Deferred

Submitted by

Signature	Resident Engineer	Date
[signature]	BILL CASEY	8-31-09

Approval Recommended by

Signature	Area Construction Manager	Date
Deanna Vilcheck	DEANNA VILCHECK	9/1/09

Engineer Approval by

Signature	Area Construction Manager	Date
Deanna Vilcheck	DEANNA VILCHECK	11/4/09

We the undersigned contractor, have given careful consideration to the change proposed and agree, if this proposal is approved, that we will provide all equipment, furnish the materials, except as may otherwise be noted above, and perform all services necessary for the work above specified, and will accept as full payment therefor the prices shown above.

NOTE: If you, the contractor, do not sign acceptance of this order, your attention is directed to the requirements of the specifications as to proceeding with the ordered work and filing a written protest within the time therein specified.

Contractor Acceptance by

Signature	(Print name and title)	Date
[signature]	STEVE FRANCIS, CHIEF ESTIMATOR	9.14.09

CONTRACT NO. 04-0120R4

CONTRACT CHANGE ORDER NO 202

SHEET 3 OF 9

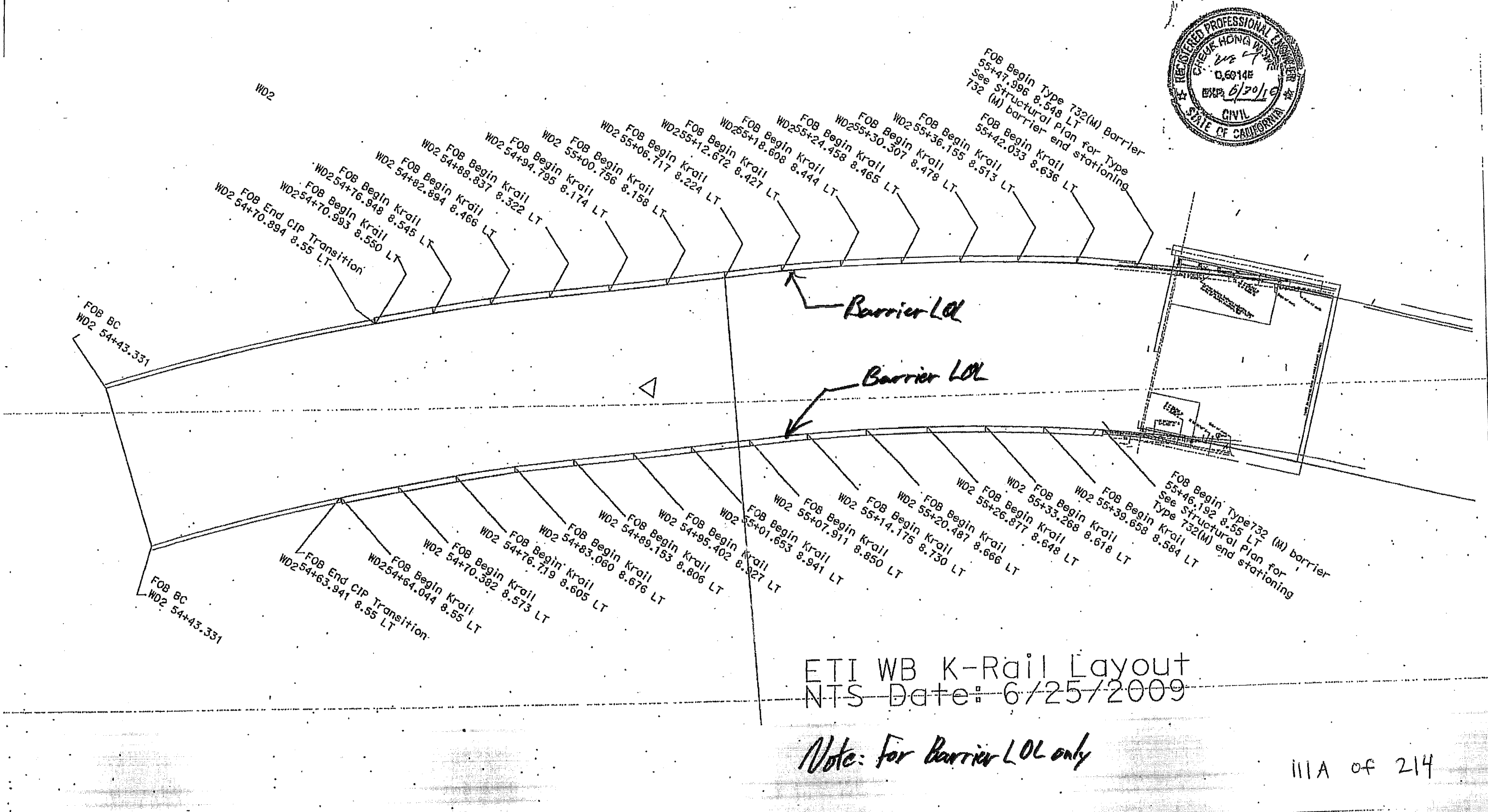

REGISTERED PROFESSIONAL ENGINEER
CHEUK HONG WONG
No. 60145
EXP. 6/30/10
CIVIL
STATE OF CALIFORNIA

ETI WB K-Rail Layout
NTS Date: 6/25/2009

Note: For Barrier LOL only

CONTRACT NO. 04-0120R4

CONTRACT CHANGE ORDER NO 202

SHEET 4 OF 9

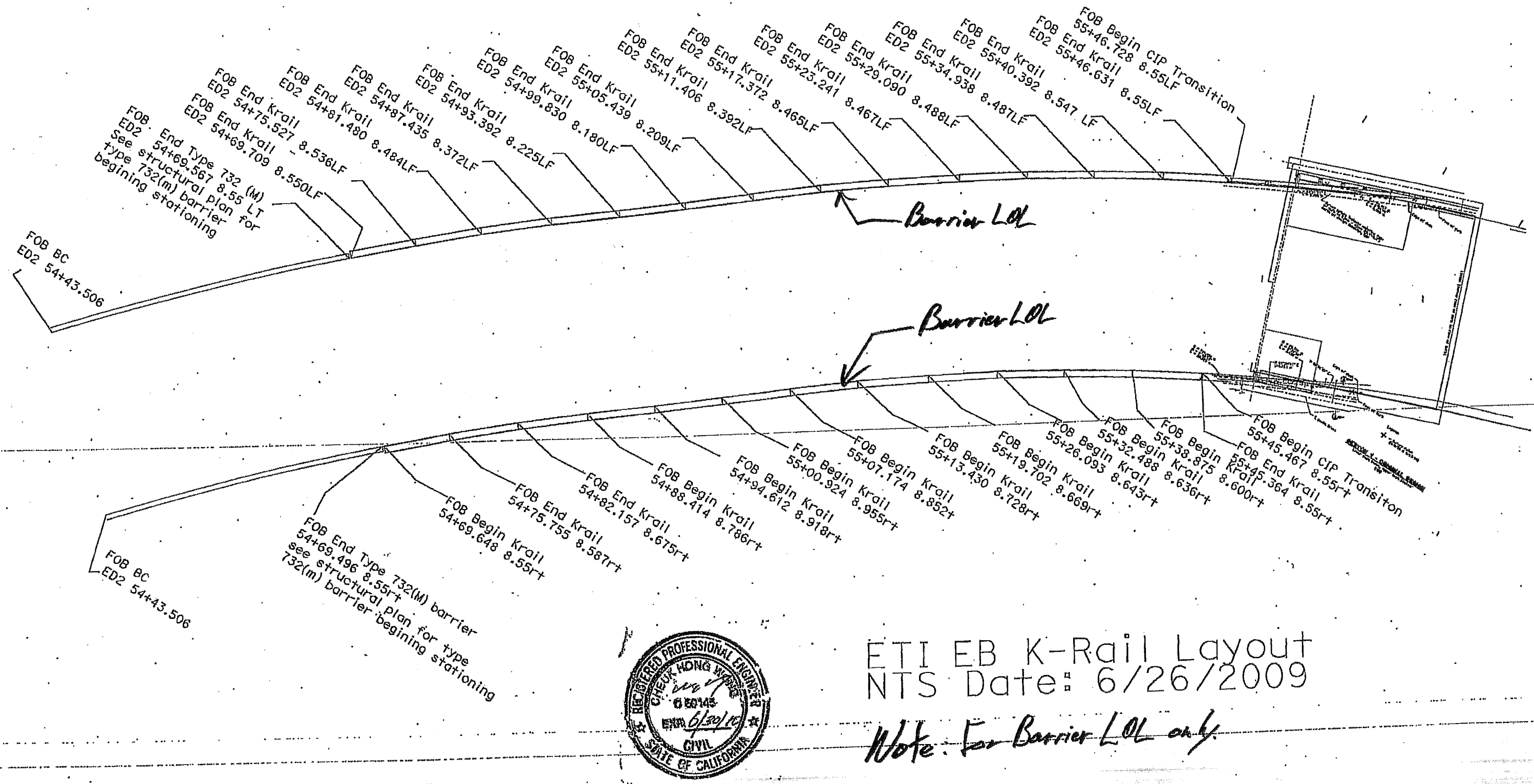

REGISTERED PROFESSIONAL ENGINEER
CHEUK HONG KWONG
No. 60145
EXP. 6/30/10
CIVIL
STATE OF CALIFORNIA

ETI EB K-Rail Layout
NTS Date: 6/26/2009

Note: For Barrier LOL only

Caltrans Metric

DIST	COUNTY	ROUTE	KILOMETER POST TOTAL PROJECT	SHEET No	TOTAL
04	SF	80	12.6/13.2		

REGISTERED CIVIL ENGINEER

PLANS APPROVAL DATE

The State of California or its officers or agents shall not be responsible for the accuracy or completeness of electronic copies of this plan sheet.

REGISTERED PROFESSIONAL ENGINEER
Brian Maroney
No. C39754
Exp. 12/31/2009
CIVIL
STATE OF CALIFORNIA

REGISTERED PROFESSIONAL ENGINEER
MICHAEL E. WHITESIDE
No. C047977
Exp. 12.31.09
CIVIL
STATE OF CALIFORNIA

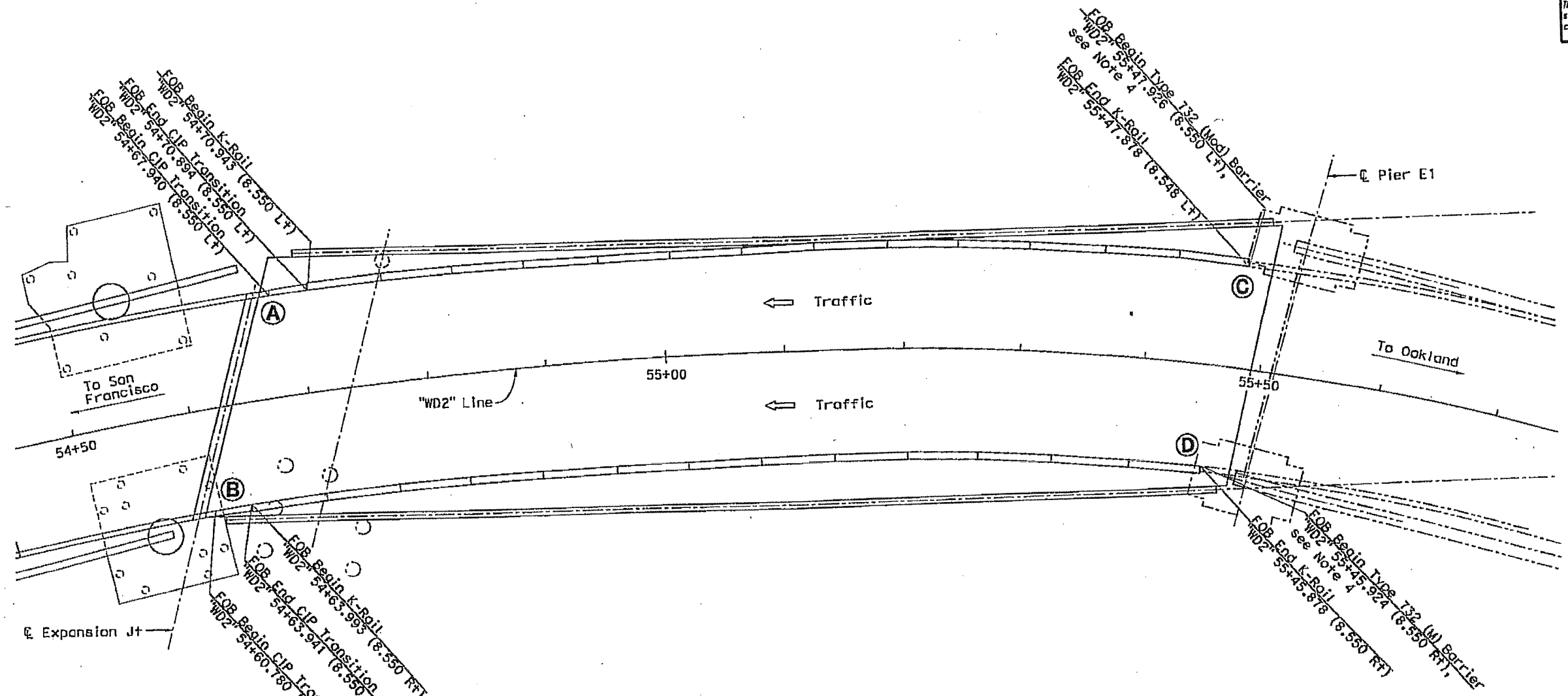

UPPER DECK ("WD2" Line)

No Scale

CONTRACT NO. 04-0120R4

CONTRACT CHANGE ORDER NO 202

SHEET 5 OF 9

Notes:

1. There is a 50mm gap at the beginning and end of barrier (by others) along LOL.
2. All Stations are located at the inside face of the barrier or CIP transition.
3. See Contract Drawings for modifications to Type 732 Rail.
4. See Structural Plan for Type 732 (Mod) end stationing.
5. For Elevation views at locations Ⓐ, Ⓑ, Ⓒ, Ⓓ, see "Upper Deck Details" sheet.
6. K-Rail layout by others.

ALL DIMENSIONS ARE IN METERS UNLESS OTHERWISE SHOWN

	DESIGN	BY M. Whiteside	CHECKED B. Maroney
DESIGN OVERSIGHT	DETAILS	BY V. Ortega	CHECKED M. Whiteside
SIGN OFF DATE	QUANTITIES	BY	CHECKED

LOAD FACTOR DESIGN — LIVE LOADING: HS20-44 AND ALTERNATIVE AND PERMIT DESIGN LOAD
LAYOUT BY — CHECKED
SPECIFICATIONS BY — PLANS AND SPECS COMPARED

PREPARED FOR THE STATE OF CALIFORNIA DEPARTMENT OF TRANSPORTATION

Brian Maroney
PROJECT MANAGER

CU
EA 0120R4

BRIDGE NO. 34-0006 (TEMP)
KP(PM) 12.6

SAN FRANCISCO OAKLAND BAY BRIDGE
EAST SPAN SEISMIC SAFETY PROJECT

EAST TIE-IN

UPPER DECK BARRIER LAYOUT

DISREGARD PRINTS BEARING EARLIER REVISION DATES —

REVISION DATES (PRELIMINARY STAGE ONLY)

SHEET 112 OF 214

ORIGINAL SCALE IN MILLIMETERS FOR REDUCED PLANS 0 10 20 30 40 50 60 70 80 90 100

DESIGN GENERAL PLAN SHEET (METRIC) (REV.3/1/99)
DATE⊕ TIME⊕ Pen Table File

FILE => D:\PROJECTS\481618\Struct\dgn\481618-u-bralayout-upper.dgn

USERNAME => vortega DATE PLOTTED => 7/24/2009 TIME PLOTTED => 9:02:58 AM FILE => D:\PROJECTS\481618\Struct\dgn\481618-u-bralayout-upper.dgn

DIST	COUNTY	ROUTE	KILOMETER POST TOTAL PROJECT	SHEET No	TOTAL
04	SF	80	12.6/13.2		

REGISTERED CIVIL ENGINEER

REGISTERED PROFESSIONAL ENGINEER
Brian Maroney
No. C39754
Exp.12/31/2009
CIVIL
STATE OF CALIFORNIA

PLANS APPROVAL DATE

The State of California or its officers or agents shall not be responsible for the accuracy or completeness of electronic copies of this plan sheet.

REGISTERED PROFESSIONAL ENGINEER
MICHAEL E. WHITESIDE
No. C047977
Exp. 12.31.09
CIVIL
STATE OF CALIFORNIA

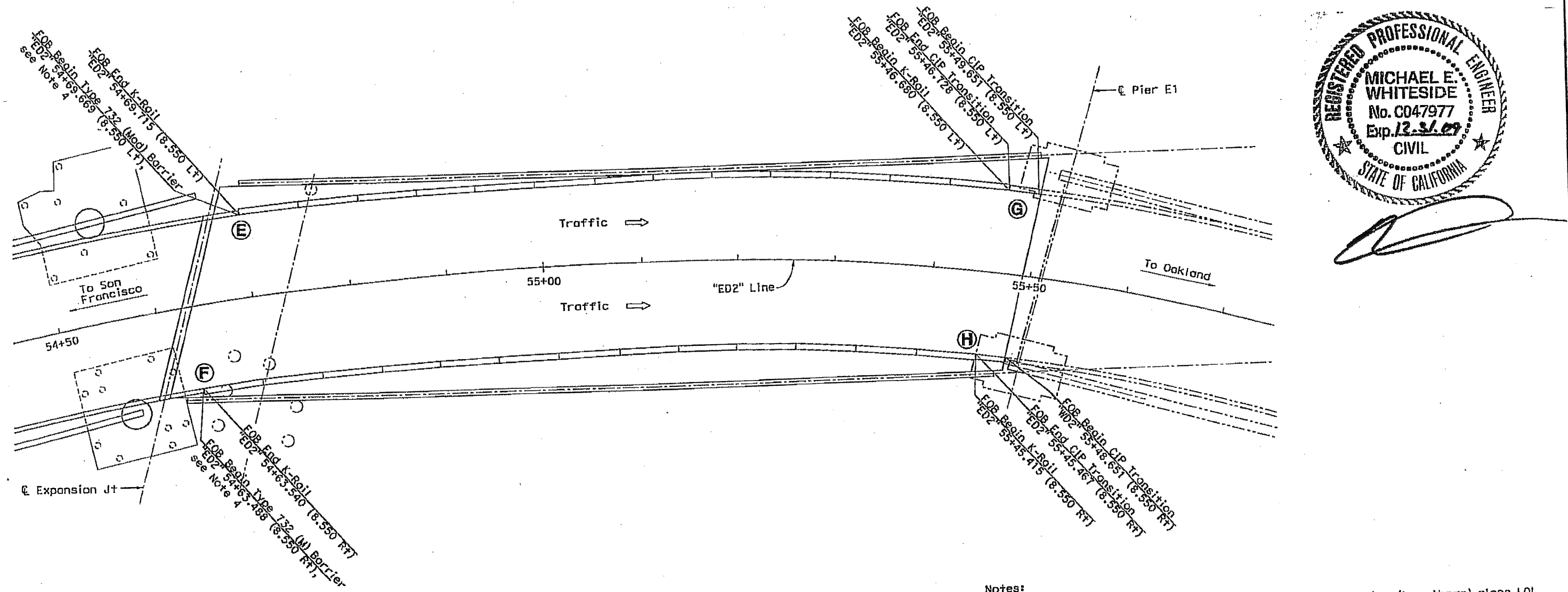

LOWER DECK ("ED2" Line)

No Scale

CONTRACT NO. 04-0120R4

CONTRACT CHANGE ORDER NO 202

SHEET 6 OF 9

Notes:

1. There is a 50mm gap at the beginning and end of barrier (by others) along LOL.
2. All Stations are located at the inside face of the barrier or CIP transition.
3. See Contract Drawings for modifications to Type 732 Rail.
4. See Structural Plan for Type 732 (Mod) end stationing.
5. For Elevation views at locations Ⓔ, Ⓕ, Ⓖ, Ⓗ, see "Lower Deck Details" sheet.
6. K-Rail layout by others.

ALL DIMENSIONS ARE IN METERS UNLESS OTHERWISE SHOWN

SAN FRANCISCO OAKLAND BAY BRIDGE
EAST SPAN SEISMIC SAFETY PROJECT

EAST TIE-IN

LOWER DECK BARRIER LAYOUT

DESIGN OVERSIGHT	DESIGN	BY M. Whiteside	CHECKED B. Maroney	LOAD FACTOR DESIGN	LIVE LOADING: HS20-44 AND ALTERNATIVE AND PERMIT DESIGN LOAD
SIGN OFF DATE	DETAILS	BY V. Ortega	CHECKED M. Whiteside	LAYOUT	BY / CHECKED
	QUANTITIES	BY	CHECKED	SPECIFICATIONS	BY / PLANS AND SPECS COMPARED

PREPARED FOR THE STATE OF CALIFORNIA
DEPARTMENT OF TRANSPORTATION

Brian Maroney
PROJECT MANAGER

CU
EA 0120R4

BRIDGE NO. 34-0006 (TEMP)
RP(PM) 12.6

DISREGARD PRINTS BEARING EARLIER REVISION DATES

REVISION DATES (PRELIMINARY STAGE ONLY)

SHEET 11D OF 214

ORIGINAL SCALE IN MILLIMETERS FOR REDUCED PLANS 0 10 20 30 40 50 60 70 80 90 100

DESIGN GENERAL PLAN SHEET (METRIC) (REV.3/1/98)
#DATE# #TIME# Pen Table File

FILE => D:\PROJECTS\481618\Struc\dgn\481618-u-bralayout-lower.dgn

USERNAME => vortega DATE PLOTTED => 7/24/2009 TIME PLOTTED => 9:02:24 AM FILE => D:\PROJECTS\481618\Struc\dgn\481618-u-bralayout-lower.dgn

DIST	COUNTY	ROUTE	KILOMETER POST TOTAL PROJECT	SHEET No.	TOTAL
04	SF	80	12.6/13.2		

REGISTERED CIVIL ENGINEER

PLANS APPROVAL DATE

The State of California or its officers or agents shall not be responsible for the accuracy or completeness of electronic copies of this plan sheet.

REGISTERED PROFESSIONAL ENGINEER — Brian Maroney — No. C39754 — Exp. 12/31/2009 — CIVIL — STATE OF CALIFORNIA

REGISTERED PROFESSIONAL ENGINEER — MICHAEL E. WHITESIDE — No. C047977 — Exp. 12.31.09 — CIVIL — STATE OF CALIFORNIA

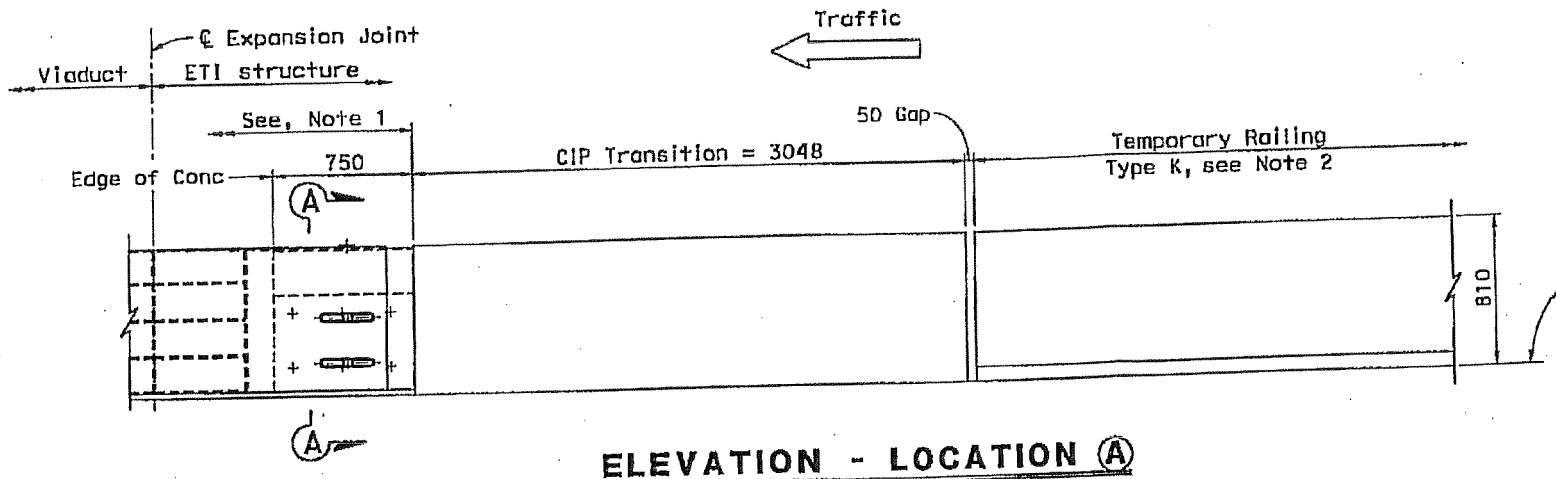

ELEVATION - LOCATION Ⓐ

1:20

Location Ⓑ similar

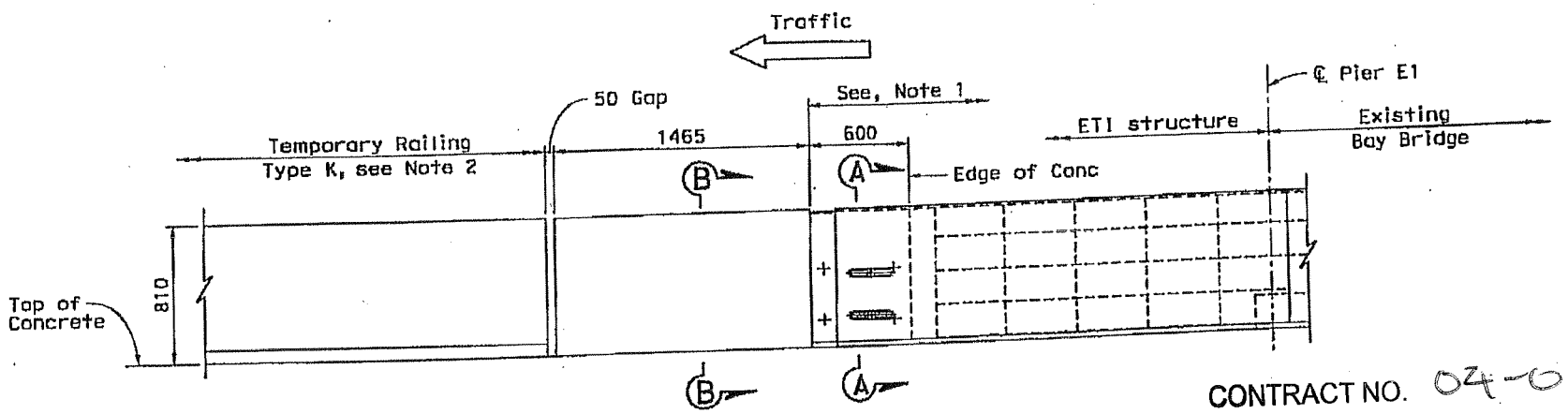

ELEVATION - LOCATION Ⓒ

1:20

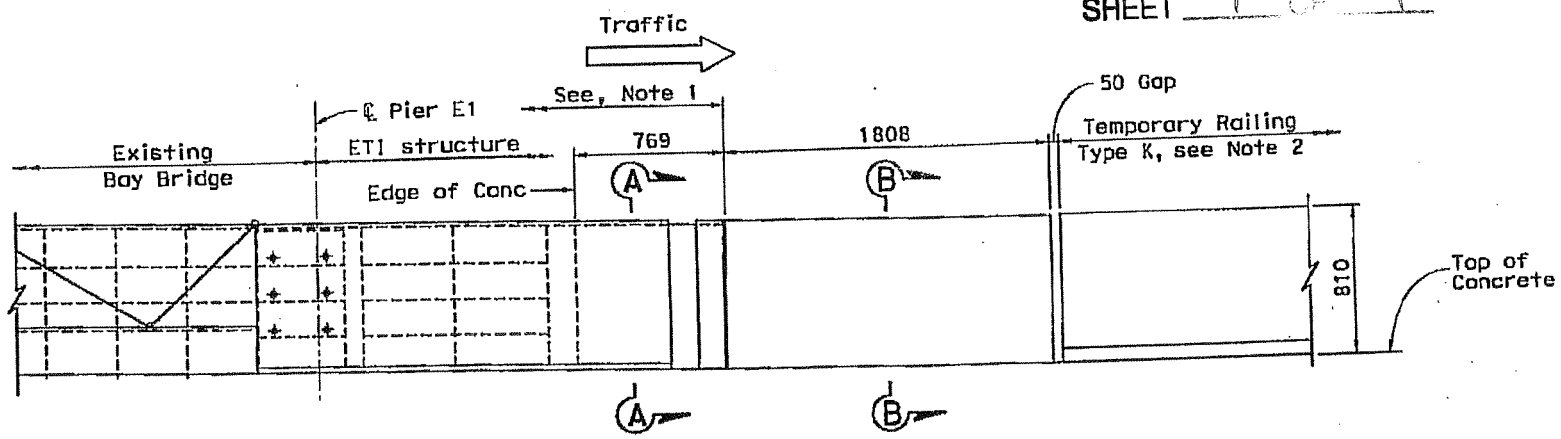

ELEVATION - LOCATION Ⓓ

1:20

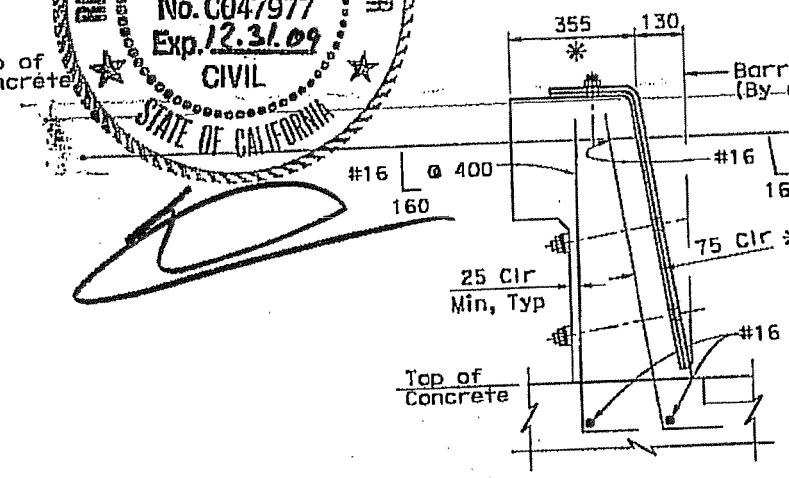

SECTION A-A

1:10

See, Note 1

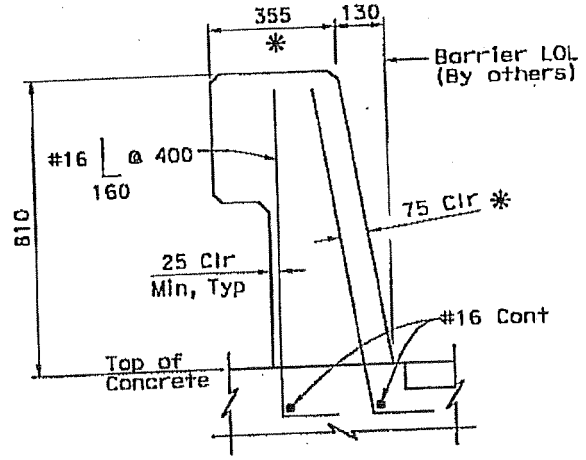

SECTION B-B

1:10

B11-55

CONTRACT NO. 04-0120R4

CONTRACT CHANGE ORDER NO 202

SHEET 7 OF 9

Notes:

1. For Details not shown see "Expansion Joint Barrier" sheets.
2. See "Bolt Connection Detail" on "CIP Barrier Transition Details"

* For placement of reinforcement only. Will vary depending on exact location upon roll in and set down.

ALL DIMENSIONS ARE IN MILLIMETERS UNLESS OTHERWISE SHOWN

SAN FRANCISCO OAKLAND BAY BRIDGE
EAST SPAN SEISMIC SAFETY PROJECT

EAST TIE-IN

UPPER DECK DETAILS

DESIGN OVERSIGHT	DESIGN	W. Whiteside	B. Maroney	LOAD FACTOR DESIGN	LIVE LOADING: HS20-44 AND ALTERNATIVE AND PERMIT DESIGN LOAD
SIGN OFF DATE	DETAILS	V. Ortega	W. Whiteside	LAYOUT	CHECKED
	QUANTITIES		CHECKED	SPECIFICATIONS	PLANS AND SPECS COMPARED

PREPARED FOR THE STATE OF CALIFORNIA DEPARTMENT OF TRANSPORTATION

Brian Maroney
PROJECT MANAGER

CU 12.6
EA 0120R4

BRIDGE NO. 34-0006 (TEMP)
KP(PM)

DISREGARD PRINTS BEARING EARLIER REVISION DATES

REVISION DATES (PRELIMINARY STAGE ONLY)

SHEET 111 E 214

ORIGINAL SCALE IN MILLIMETERS FOR REDUCED PLANS 0 10 20 30 40 50 60 70 80 90 100

DESIGN GENERAL PLAN SHEET (METRIC) (REV.3/1/95)
$DATE$ $TIME$ Pen Table File

FILE => D:\PROJECTS\481618\struc\dgn\481618-u-brde102.dgn

DATE PLOTTED => 7/24/2009 TIME PLOTTED => 9:00:28 AM USERNAME => vortega

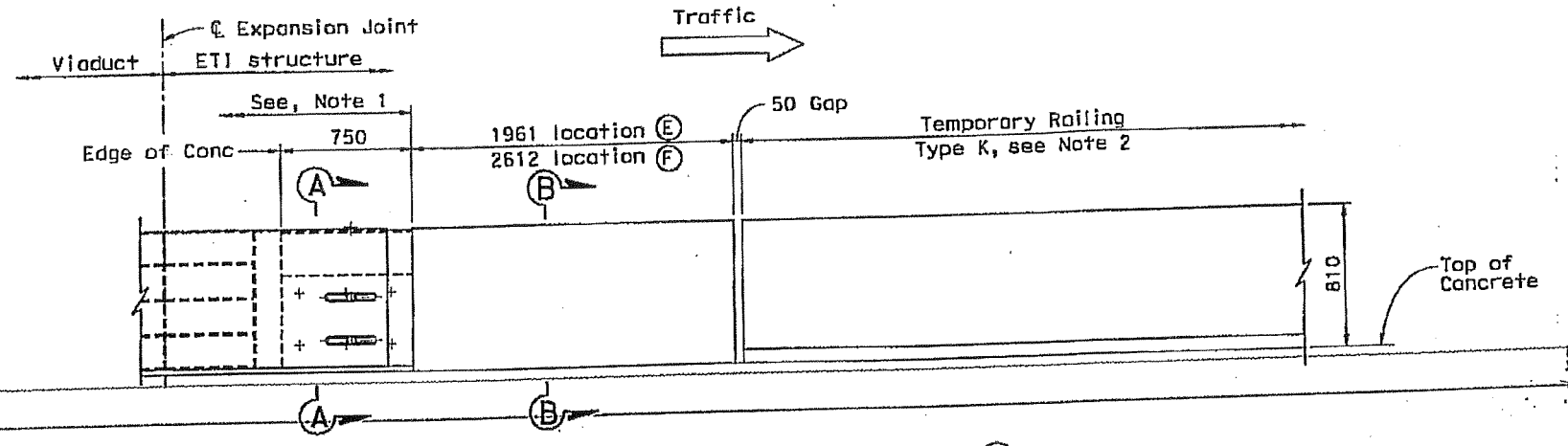

ELEVATION - LOCATION Ⓔ

1:20

Location Ⓕ similar

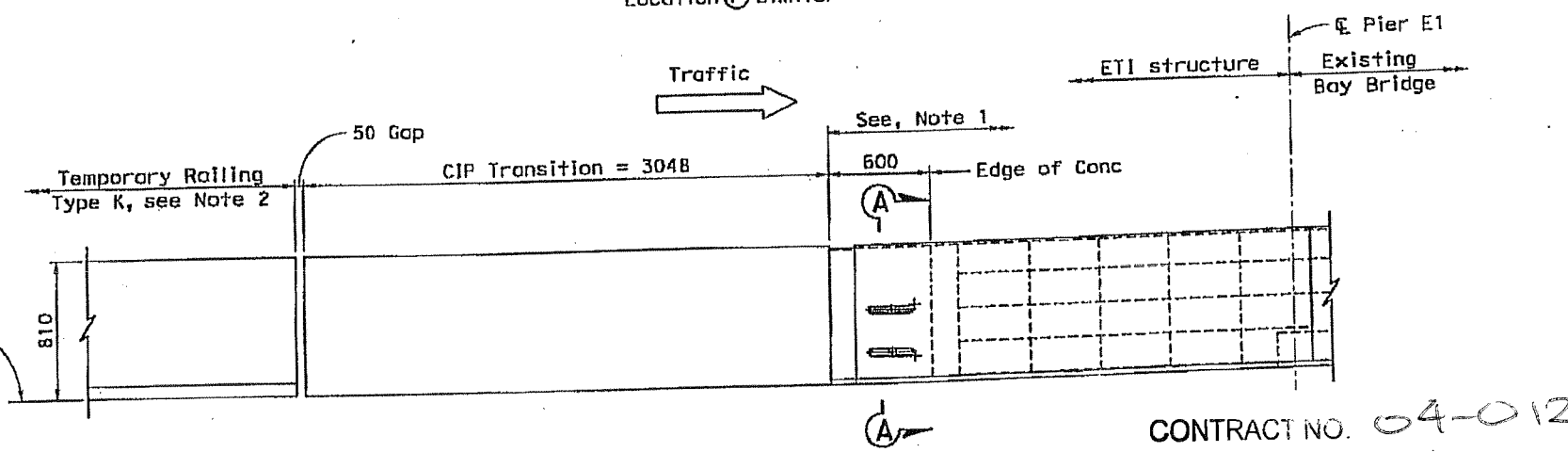

ELEVATION - LOCATION Ⓖ

1:20

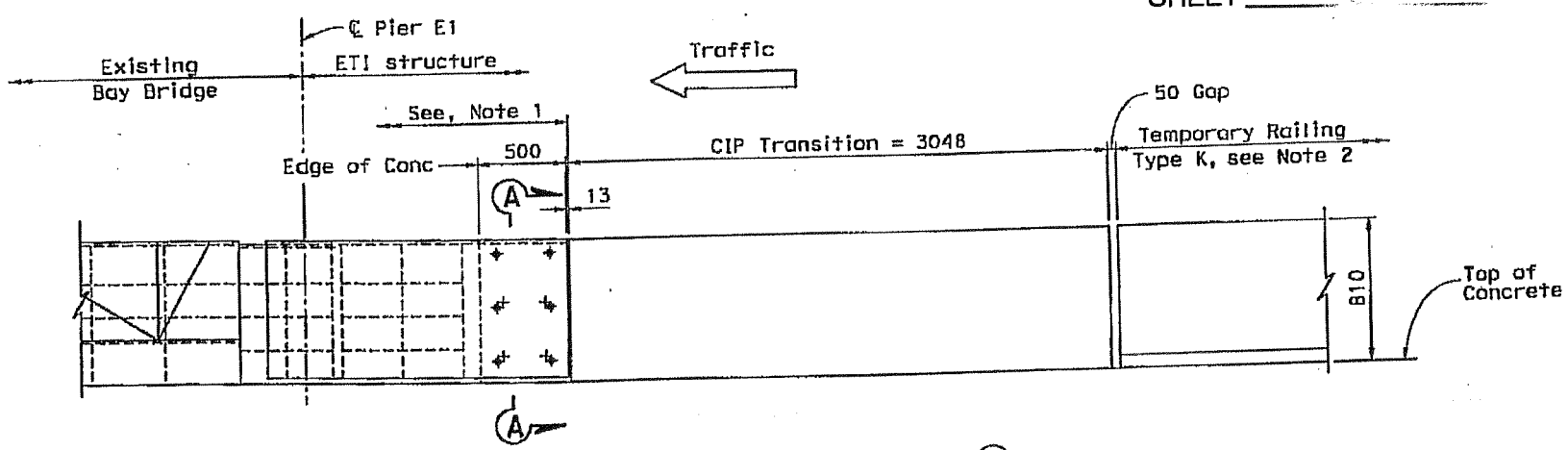

ELEVATION - LOCATION Ⓗ

1:20

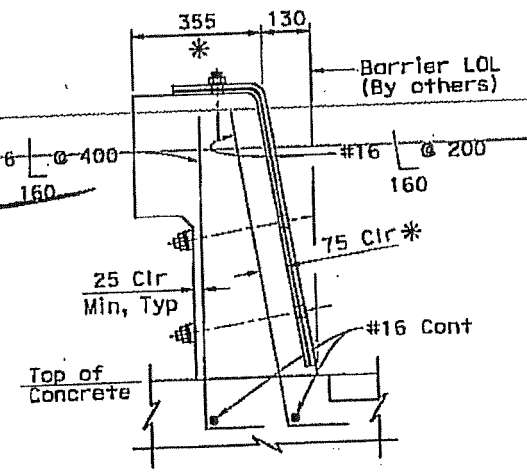

SECTION A-A

1:10

See, Note 1

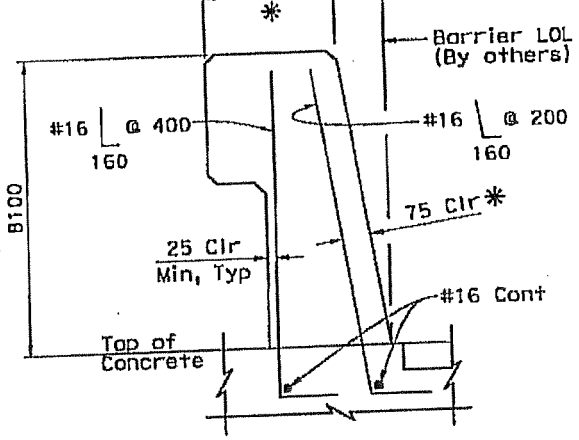

SECTION B-B

1:10

B11-55

Notes:

1. For Details not shown see "Expansion Joint Barrier" sheets.
2. See "Bolt Connection Detail" on "CIP Barrier Transition Details"
3. For Type 732 (Mod) see "Upper Deck Details" sheet

* For placement of reinforcement only. Will vary depending on exact location upon roll in and set down.

DIST	COUNTY	ROUTE	KILOMETER POST TOTAL PROJECT	SHEET No	TOTAL
04	SF	80	12.6/13.2		

REGISTERED CIVIL ENGINEER

PLANS APPROVAL DATE

The State of California or its officers or agents shall not be responsible for the accuracy or completeness of electronic copies of this plan sheet.

REGISTERED PROFESSIONAL ENGINEER — Brian Maroney — No. C39754 — Exp. 12/31/2009 — CIVIL — STATE OF CALIFORNIA

REGISTERED PROFESSIONAL ENGINEER — MICHAEL E. WHITESIDE — No. C047977 — Exp. 12.31.09 — CIVIL — STATE OF CALIFORNIA

CONTRACT NO. 04-0120R4

CONTRACT CHANGE ORDER NO 202

SHEET 8 OF 9

ALL DIMENSIONS ARE IN MILLIMETERS UNLESS OTHERWISE SHOWN

SAN FRANCISCO OAKLAND BAY BRIDGE
EAST SPAN SEISMIC SAFETY PROJECT

EAST TIE-IN
LOWER DECK DETAILS

DESIGN OVERSIGHT	DESIGN	M. Whiteside	B. Maroney	LOAD FACTOR DESIGN	LIVE LOADING: HS20-44 AND ALTERNATIVE AND PERMIT DESIGN LOAD
SIGN OFF DATE	DETAILS	V. Ortega	M. Whiteside	LAYOUT	
	QUANTITIES			SPECIFICATIONS	

PREPARED FOR THE STATE OF CALIFORNIA DEPARTMENT OF TRANSPORTATION

Brian Maroney — PROJECT MANAGER

CU EA 0120R4

BRIDGE NO. 34-0006 (TEMP)

KP(PM) 12.6

DISREGARD PRINTS BEARING EARLIER REVISION DATES

REVISION DATES (PRELIMINARY STAGE ONLY)

SHEET 11 OF 214

DESIGN GENERAL PLAN SHEET (METRIC) (REV.3/1/99)
@DATE@ @TIME@ Pen Table File

ORIGINAL SCALE IN MILLIMETERS FOR REDUCED PLANS 0 10 20 30 40 50 60 70 80 90 100

FILE => 01\PROJECTS\4816I8\struc\dgn\4816I8-u-brdet03.dgn

FILE => 01\PROJECTS\4816I8\struc\dgn\4816I8-u-brdet03.dgn
TIME PLOTTED => 8:59:27 AM
DATE PLOTTED => 7/24/2008
USERNAME => vortega

CONTRACT NO. 04-0120R4

CONTRACT CHANGE ORDER NO 202

SHEET 9 OF 9

Caltrans Metric

DIST	COUNTY	ROUTE	KILOMETER POST TOTAL PROJECT	SHEET NO.	TOTAL
04	SF	80	12.6/13.2		

REGISTERED CIVIL ENGINEER

PLANS APPROVAL DATE

The State of California or its officers or agents shall not be responsible for the accuracy or completeness of electronic copies of this plan sheet.

REGISTERED PROFESSIONAL ENGINEER — Brian Maroney — No. C39754 — Exp. 12/31/2009 — CIVIL — STATE OF CALIFORNIA

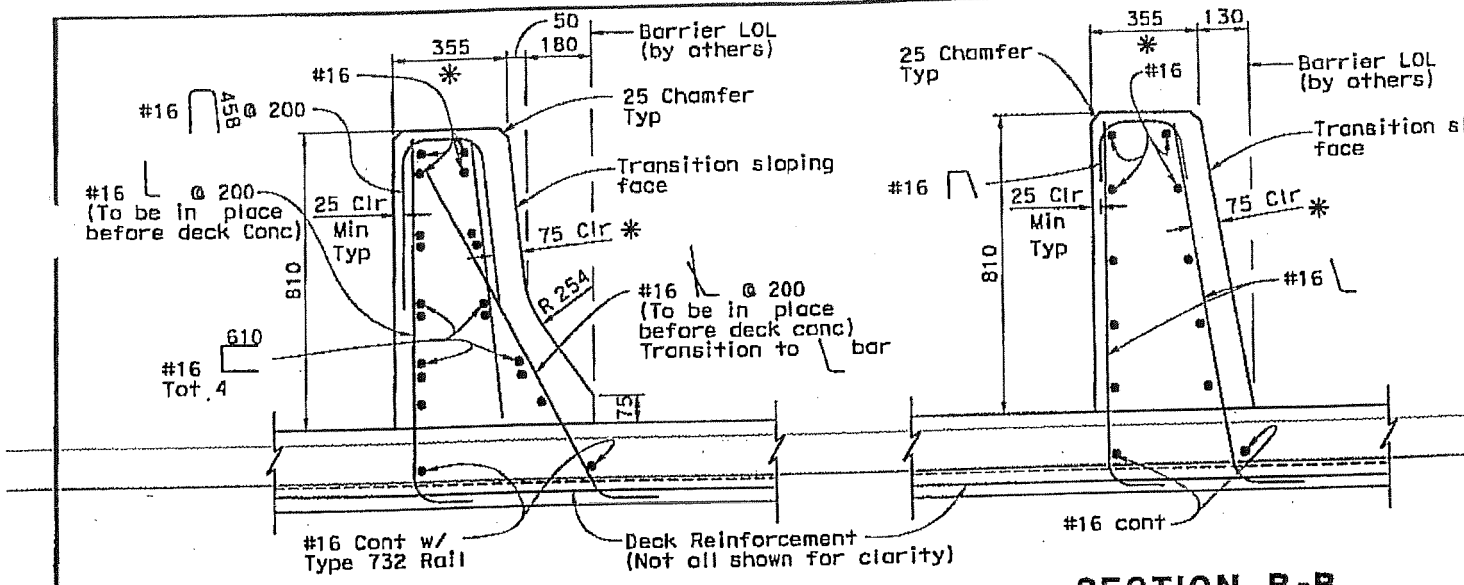

SECTION A-A

1:10

(For Details not shown see B11-53)

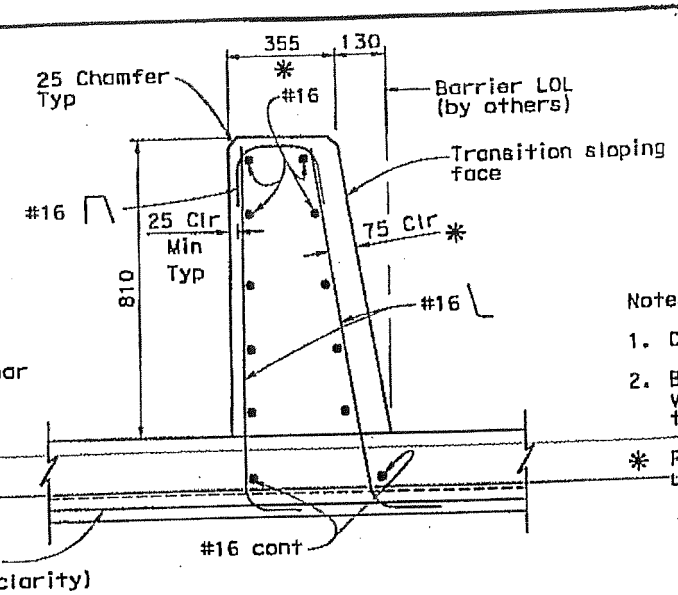

SECTION B-B

1:10

(For Details not shown see B11-55)

Notes:

1. Clearance to reinforcing steel in barrier to be 25mm, except as noted.
2. Bars that extend into the deck shall be placed so the hooks are in the valley section of the metal deck form. Add additional bars as necessary to the end of the CIP Transition if the metal deck for valley does not line up.

* For placement of reinforcement only. Will vary depending on exact location upon roll-in-and-set down.

REGISTERED PROFESSIONAL ENGINEER — MICHAEL E. WHITESIDE — No. C047977 — Exp. 12.31.09 — CIVIL — STATE OF CALIFORNIA

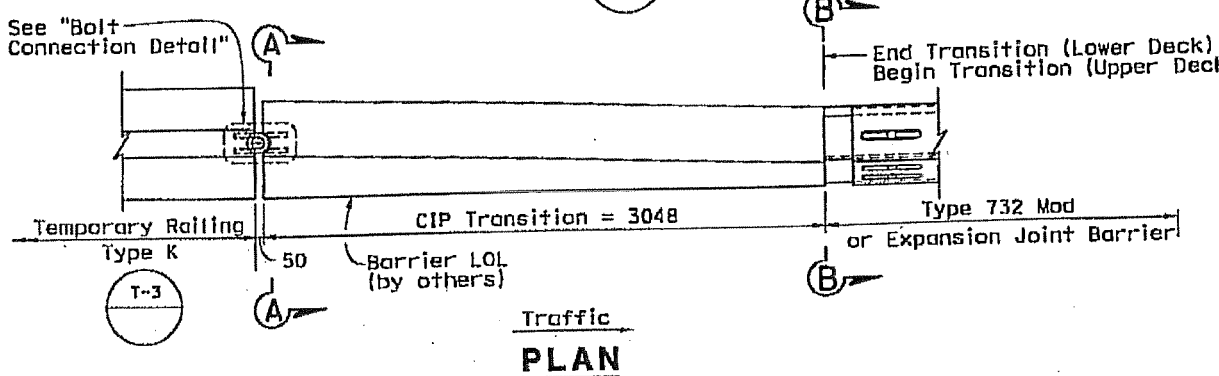

PLAN

1:20

(Transition Ⓒ shown, others similar)

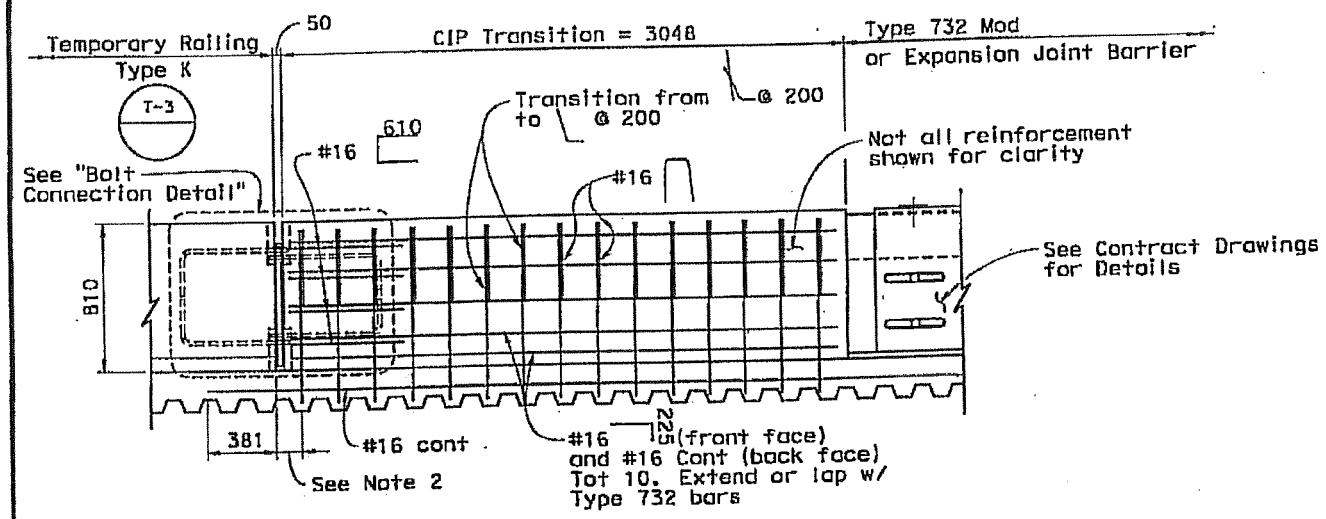

ELEVATION

1:20

(Transition Ⓒ shown, others similar)

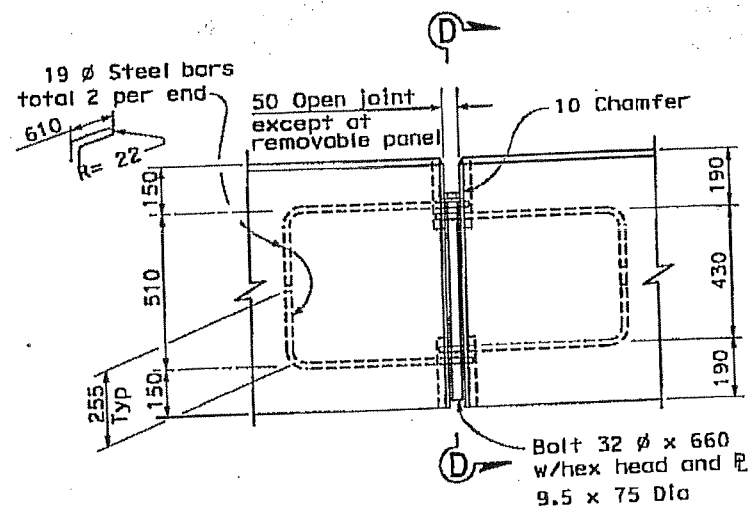

ELEVATION

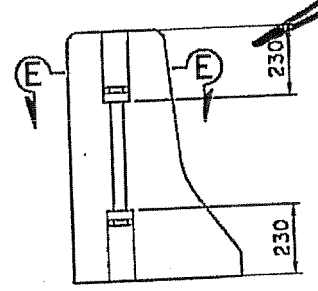

VIEW D-D

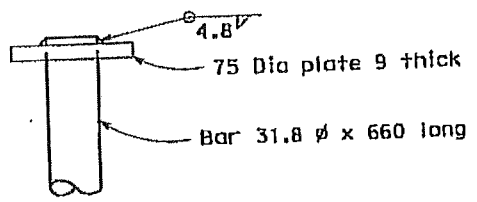

ALTERNATIVE HEAD DETAIL

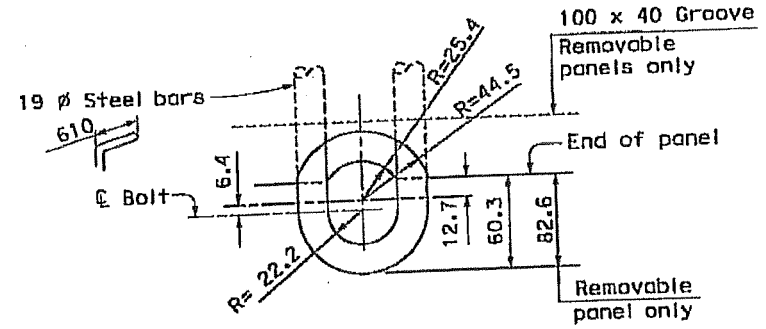

SECTION E-E

BOLT CONNECTION DETAIL

No Scale

ALL DIMENSIONS ARE IN METERS UNLESS OTHERWISE SHOWN

SAN FRANCISCO OAKLAND BAY BRIDGE
EAST SPAN SEISMIC SAFETY PROJECT

EAST TIE-IN

CIP BARRIER TRANSITION DETAILS

DESIGN OVERSIGHT	DESIGN	BY M. Whiteside	CHECKED B. Maroney	LOAD FACTOR DESIGN	LIVE LOADING: HS20-44 AND ALTERNATIVE AND PERMIT DESIGN LOAD
SIGN OFF DATE	DETAILS	BY V. Ortega	CHECKED M. Whiteside	LAYOUT	BY / CHECKED
	QUANTITIES	BY	CHECKED	SPECIFICATIONS	BY / CHECKED PLANS AND SPECS COMPARED

PREPARED FOR THE STATE OF CALIFORNIA DEPARTMENT OF TRANSPORTATION

Brian Maroney PROJECT MANAGER

CU 34-0006 (TEMP) EA 0120R4

BRIDGE NO. 34-0006 (TEMP) KP(PM) 12.6

DISREGARD PRINTS BEARING EARLIER REVISION DATES →

REVISION DATES (PRELIMINARY STAGE ONLY)

SHEET 116 OF 214

ORIGINAL SCALE IN MILLIMETERS FOR REDUCED PLANS 0 10 20 30 40 50 60 70 80 90 100

DESIGN GENERAL PLAN SHEET (METRIC) (REV.3/1/99)

DATE= STIMES= Pen Table File=

FILE => D:\PROJECTS\481618\struc\dgn\481618-u-brdet01.dgn

DATE PLOTTED => 7/24/2009 TIME PLOTTED => 01:01:43 AM

USERNAME => vortega

STATE OF CALIFORNIA - DEPARTMENT OF TRANSPORTATION

CONTRACT CHANGE ORDER MEMORANDUM

TO: MIKE FORNER / DEANNA VILCHECK	FILE: E.A. 04 - 0120R4
	CO-RTE-PM SF-80-12.6/13.2
FROM: BILL CASEY	FED. NO. ACBRIM-080-1(097)N

CCO#: **202**	SUPPLEMENT#: **0**	Category Code: **CKPL**	CONTINGENCY BALANCE (incl. this change) **$55,358,714.59**
COST: **($42,000.00)**	INCREASE ☐	DECREASE ☑	HEADQUARTERS APPROVAL REQUIRED? ☐ YES ☑ NO
SUPPLEMENTAL FUNDS PROVIDED: **$0.00**			IS THIS REQUEST IN ACCORDANCE WITH ENVIRONMENTAL DOCUMENTS? ☑ YES ☐ NO

CCO DESCRIPTION:
Furnish ETI Concrete Barrier

PROJECT DESCRIPTION:
CONSTRUCT ROUTE 80 TEMP BYPASS STRUCTURE

Original Contract Time:	Time Adj. This Change:	Previously Approved CCO Time Adjustments:	Percentage Time Adjusted: (including this change)	Total # of Unreconciled Deferred Time CCO(s): (including this change)
475 Day(s)	**DEF** Day(s)	**1195** Day(s)	**252** %	**8**

THIS CHANGE ORDER PROVIDES FOR:

the placement of concrete barrier on the East Tie In structure.

This project, the Yerba Buena Island Detour (YBID), was awarded in March 2004 to construct a detour that will allow for the tie in of the new east span of the San Francisco Oakland Bay Bridge to Yerba Buena Island. The YBID encompasses three main structures, the East Tie-In to the existing bridge, the West Tie-In (WTI) to Yerba Buena Island, and the Viaduct structure between the two tie ins.

Two separate Department strategy memorandums, dated December 14, 2006 and December 25, 2006, approved by Tony Anziano - Toll Bridge Program Manager and Richard Land - Chief Engineer, recommended that the Department assume responsibility for the designs of the East Tie-In (ETI) and West Tie-In (WTI) portions of this contract, and incorporated seismic retrofit work of the permanent Yerba Buena Island Transition Structure (YBITS) onto this project. Based on these memorandums, the design of the structure was changed from a design that incorporated the existing steel truss bridge with the new structure to a design that replaces the existing structure with a new structure (roll out / roll in). The approval of these strategy memorandums extended the project completion date approximately 5 years.

Project Development along with Toll Bridge Design had issued plan sheets providing for the placement of both cast-in-place and Type K concrete barrier along the East Tie-In structure. This change order incorporates these plan sheets into the contract.

Compensation for this work shall be paid as extra work at force account under the previously approved Contract Change Order (CCO) No. 204. The majority of this work shall take place during the 2009 Labor Day Weekend closure of the San Francisco Oakland Bay Bridge for which CCO No. 204 has been issued.

This change order also eliminates the original contract bid item work for the placement of Type K concrete barrier on the West Tie-In structure. CCO No. 143 provided revised plan sheets for the Type K barrier but compensation for this scope of work was deferred. This revised scope of work shall also take place over the 2009 Labor Day Weekend closure and shall be paid under CCO No. 204.

It is estimated that the current funding provided for under CCO No. 204 is sufficient to cover these costs.

The elimination of the contract bid item for West Tie-In concrete barrier (Type K) shall result in a credit to the Department of $42,000.00. This change order will result in a $42,000.00 credit to the Department.

Adjustment of contract time is deferred pending completion of the work specified in this change as it may become the controlling operation in accordance with Section 8-1.07 "Liquidated Damages", of the Standard Specifications and Section 10-1.20 "Time Related Overhead (TRO)" of the Special Provisions.

Compensation for delays resulting from this work will be made in accordance with Section 8-1.09 "Right of Way Delays" of the Standard Specifications and Section 10-1.20 "Time Related Overhead" of the Special Provisions.

This change was concurred with by Alec Melkonians - Asst. Project Manager, Hong Wong - Project Engineer, and Lina Ellis - Maintenance.

CONCURRED BY:			
Construction Engineer:	Bill Casey, Resident Engineer	Date	8-31-09
Bridge Engineer:		Date	
Project Engineer:	Hong Wong, PE	Date	8/27/09
Project Manager:	Alec Melkonians	Date	8/27/09
FHWA Rep.:		Date	
Environmental:		Date	
Other (specify):	Lina Ellis, Maintenance	Date	9/2/09
Other (specify):		Date	
District Prior Approval By:		Date	
HQ (Issue Approve) By:		Date	
Resident Engineer's Signature:		Date	8-31-09

ESTIMATE OF COST

	THIS REQUEST	TOTAL TO DATE
ITEMS	($42,000.00)	($42,000.00)
FORCE ACCOUNT	$0.00	$0.00
AGREED PRICE	$0.00	$0.00
ADJUSTMENT	$0.00	$0.00
TOTAL	($42,000.00)	($42,000.00)

FEDERAL PARTICIPATION

☐ PARTICIPATING ☐ PARTICIPATING IN PART ☑ NONE
☐ NON-PARTICIPATING (MAINTENANCE) ☐ NON-PARTICIPATING

FEDERAL SEGREGATION (if more than one Funding Source or P.I.P. type)
☐ CCO FUNDED PER CONTRACT ☐ CCO FUNDED AS FOLLOWS

FEDERAL FUNDING SOURCE	PERCENT

STATE OF CALIFORNIA - DEPARTMENT OF TRANSPORTATION

CONTRACT CHANGE ORDER

Change Requested by: Engineer

CCO 203	Suppl. No. 0	Contract No. 04 - 0120R4	Road SF-80-12.6/13.2	FED. AID LOC.: ACBRIM-080-1(097)N

To: **CC MYERS INC**

You are directed to make the following changes from the plans and specifications or do the following described work not included in the plans and specifications for this contract. ***NOTE: This change order is not effective until approved by the Engineer.***

Description of work to be done, estimate of quantities and prices to be paid. (Segregate between additional work at contract price, agreed price and force account.) Unless otherwise stated, rates for rental of equipment cover only such time as equipment is actually used and no allowance will be made for idle time. This last percentage shown is the net accumulated increase or decrease from the original quantity in the Engineer's Estimate.

Extra Work at Lump Sum:

As authorized by the Engineer, and as shown on Sheets 2 through 22 of this change, furnish and install a camera security system for the Temporary Bypass Structure (Bridge No. 34-0006 (TEMP)).

For this work, the Contractor will be paid the sum of $196,883.90, which constitutes full compensation, including all markups, for the work of this change.

Total Cost of Extra Work at Lump Sum $196,883.90

Allow the Contractor to use an equivalent armored jacketed FO cable in the cable tray in lieu of a 41C type 4 conduit with FO cable. Also, remove the requirement of having an integrated window wiper with replaceable rubber blade on the camera.

RECEIVED
08 OCT 93 0011

Estimated Cost: Increase ☑ Decrease ☐ $196,883.90

By reason of this order the time of completion will be adjusted as follows: 0 days

Submitted by		
Signature	Resident Engineer BILL CASEY	Date 8-13-09
Approval Recommended by		
Signature Deanna Vilcheck	Area Construction Manager DEANNA VILCHECK	Date 8/17/09
Engineer Approval by		
Signature Deanna Vilcheck	Area Construction Manager DEANNA VILCHECK	Date 8/17/09

We the undersigned contractor, have given careful consideration to the change proposed and agree, if this proposal is approved, that we will provide all equipment, furnish the materials, except as may otherwise be noted above, and perform all services necessary for the work above specified, and will accept as full payment therefor the prices shown above.

NOTE: If you, the contractor, do not sign acceptance of this order, your attention is directed to the requirements of the specifications as to proceeding with the ordered work and filing a written protest within the time therein specified.

Contractor Acceptance by		
Signature D E Hmuck	(Print name and title) DANIEL E. HMUCK, PRESIDENT	Date 10/02/09

Description	8 port Fast Ethernet-switch, managed, Software Layer 2 Enhanced, for DIN rail store-and-forward-switching, fanless design
Port type and quantity	8 ports in total; 1. Uplink: 100BASE-FX, MM-SC; 2. Uplink: 100BASE-FX, MM-SC; 6 x standard 10/100 BASE TX, RJ45
More interfaces	
Power supply/signaling contact	1 x plug-in terminal block, 6-pin
V.24 interface	1 x RJ11 socket
USB interface	1 x to connect auto-configuration adapter ACA21-USB
Network size - length of cable	
Twisted pair (TP)	
Multimode fiber (MM) 50/125 ?m	0 - 5000 m, 8 dB link budget at 1300 nm, A = 1 d/km, 3 dB reserve, B = 800 MHz x km
Multimode fiber (MM) 62.5/125 ?m	0 - 4000 m, 11 dB link budget at 1300 nm, A = 1 dB/km, 3 dB reserve, B = 500 MHz x km
Single mode fiber (SM) 9/125 ?m	
Single mode fiber (LH) 9/125 ?m (long haul transceiver)	
Network size -	
Line - / star topology	any
Ring structure (HIPER-Ring) quantity switches	50 (reconfiguration time < 0.3 sec.)
Power requirements	
Operating voltage	12/24/48 V DC (9,6-60) V and 24 V AC (18-30) V (redundant)
Software	
Management	Serial interface, web-interface, SNMP V1/V2, HiVision file transfer SW HTTP/TFTP
Diagnostics	LEDs, log-file, syslog, signal contact, RMON, port mirroring, topology discovery 802.1AB, disable learning
Configuration	Comand line interface (CLI), TELNET, BootP, DHCP, DHCP option 82, HIDiscovery, auto-configuration adapter (ACD11, ACA21-USB), Watchdog configuration
Security	Port security (IP and MAC), SNMP V3 (no encryption)
Redundancy functions	HIPER-ring (ring structure), MRP (IEC-ring functionality), (Release 4.0: RSTP 802.1w, Release 4.1: RSTP 802.1D-2004), redundant network/ring coupling, dual homing, redundant 24 V power supply
Filter	QoS 4 classes, priorisation (IEEE 802.1D/p), VLAN (IEEE 802.1Q), multicast (IGMP snooping/querier), multicast detection unknown multicast, broadcast limiter, fast aging
Realtime	SNTP server
Flow control	Flow Control 802.3x, Port Priority 802.1D/p, Priority (TOS/DIFFSERV)
Ambient conditions	
Operating temperature	0 to +60C
Storage/transport temperature	-40 to +70C
Relative humidity (non-condensing)	10% to 95%
Mechanical construction	
Dimensions (W x H x D)	No Larger than 75mm x 135mm x 115mm
Mounting	DIN Rail
Protection class	IP20
Mechanical stability	
IEC 60068-2-27 shock	15 g, 11 ms duration, 18 schocks
IEC 60068-2-6 vibration	1 mm, 2 Hz - 13.2 Hz, 90 min.; 0.7g, 13,2 Hz - 100 Hz, 90 min.; 3.5 mm, 3 Hz - 9 Hz, 10 cycles, 1 octave/min.; 1g, 9 Hz - 150 Hz, 10 cycles, 1 octave/min.
EMC interference immunity	
EN 61000-4-2 electrostatic discharge (ESD)	6 kV contact discharge, 8kV air discharge
EN 61000-4-3 electromagnetic field	10 V/m (80 - 1000 MHz)
EN 61000-4-4 fast transients (burst)	2 kV power line, 1 kV data line
EN 61000-4-5 surge voltage	power line: 2kV (line/earth), 1kV (line/line), 1kV data line
EN 61000-4-6 conducted immunity	3 V (10 kHz - 150 kHz), 10 V (150 kHz - 80 MHz)
EMC emitted immunity	
FCC CFR47 Part 15	FCC CFR47 Part 15
EN 55022	EN 55022 Class A
Approvals	
Safety of industrial control equipment	cUL 508
Hazardous locations	cUL 1604 Class1 Div 2

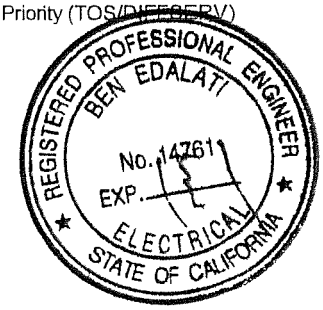

CONTRACT NO. 09-0120R4

CONTRACT CHANGE ORDER NO 203

SHEET 2 OF 22

Description	8 port Fast Ethernet-switch, managed, Software Layer 2 Enhanced, for DIN rail store-and-forward-switching, fanless design
Port type and quantity	8 ports in total; 1. Uplink: 100BASE-FX, MM-SC; 2. Uplink: 100BASE-FX, MM-SC; 6 x standard 10/100 BASE TX, RJ45
More Interfaces	
Power supply/signaling contact	1 x plug-in terminal block, 6-pin
V.24 interface	1 x RJ11 socket
USB interface	1 x to connect auto-configuration adapter ACA21-USB
Network size - length of cable	
Twisted pair (TP)	
Multimode fiber (MM) 50/125 ?m	0 - 5000 m, 8 dB link budget at 1300 nm, A = 1 d/km, 3 dB reserve, B = 800 MHz x km
Multimode fiber (MM) 62.5/125 ?m	0 - 4000 m, 11 dB link budget at 1300 nm, A = 1 dB/km, 3 dB reserve, B = 500 MHz x km
Single mode fiber (SM) 9/125 ?m	
Single mode fiber (LH) 9/125 ?m (long haul transceiver)	
Network size -	
Line - / star topology	any
Ring structure (HIPER-Ring) quantity switches	50 (reconfiguration time < 0.3 sec.)
Power requirements	
Operating voltage	12/24/48 V DC (9,6-60) V and 24 V AC (18-30) V (redundant)
Software	
Management	Serial interface, web-interface, SNMP V1/V2, HiVision file transfer SW HTTP/TFTP
Diagnostics	LEDs, log-file, syslog, signal contact, RMON, port mirroring, topology discovery 802.1AB, disable learning
Configuration	Comand line interface (CLI), TELNET, BootP, DHCP, DHCP option 82, HIDiscovery, auto-configuration adapter (ACD11, ACA21-USB), Watchdog configuration
Security	Port security (IP and MAC), SNMP V3 (no encryption)
Redundancy functions	HIPER-ring (ring structure), MRP (IEC-ring functionality), (Release 4.0: RSTP 802.1w, Release 4.1: RSTP 802.1D-2004), redundant network/ring coupling, dual homing, redundant 24 V power supply
Filter	QoS 4 classes, priorisation (IEEE 802.1D/p), VLAN (IEEE 802.1Q), multicast (IGMP snooping/querier), multicast detection unknown multicast, broadcast limiter, fast aging
Realtime	SNTP server
Flow control	Flow Control 802.3x, Port Priority 802.1D/p, Priority (TOS/DIFFSERV)
Ambient conditions	
Operating temperature	0 to +60C
Storage/transport temperature	-40 to +70C
Relative humidity (non-condensing)	10% to 95%
Mechanical construction	
Dimensions (W x H x D)	No Larger than 75mm x 135mm x 115mm
Mounting	DIN Rail
Protection class	IP20
Mechanical stability	
IEC 60068-2-27 shock	15 g, 11 ms duration, 18 schocks
IEC 60068-2-6 vibration	1 mm, 2 Hz - 13.2 Hz, 90 min.; 0.7g, 13,2 Hz - 100 Hz, 90 min.; 3.5 mm, 3 Hz - 9 Hz, 10 cycles, 1 octave/min.; 1g, 9 Hz - 150 Hz, 10 cycles, 1 octave/min.
EMC interference immunity	
EN 61000-4-2 electrostatic discharge (ESD)	6 kV contact discharge, 8kV air discharge
EN 61000-4-3 electromagnetic field	10 V/m (80 - 1000 MHz)
EN 61000-4-4 fast transients (burst)	2 kV power line, 1 kV data line
EN 61000-4-5 surge voltage	power line: 2kV (line/earth), 1kV (line/line), 1kV data line
EN 61000-4-6 conducted immunity	3 V (10 kHz - 150 kHz), 10 V (150 kHz - 80 MHz)
EMC emitted immunity	
FCC CFR47 Part 15	FCC CFR47 Part 15
EN 55022	EN 55022 Class A
Approvals	
Safety of industrial control equipment	cUL 508
Hazardous locations	cUL 1604 Class1 Div 2

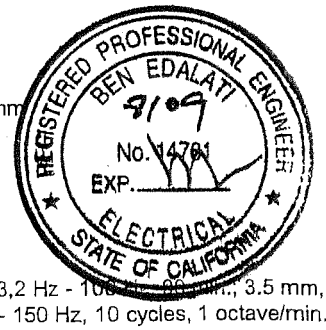

CONTRACT NO. 04-0120R4

CONTRACT CHANGE ORDER NO 203

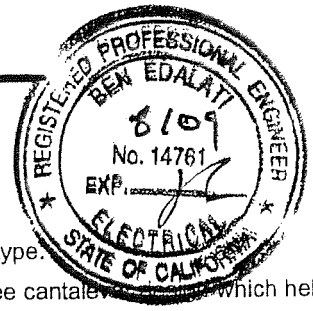

1. General

1.1 The camera shall be a precision mechanical Pan-Tilt-Zoom type.

1.2 The camera shall have an option for a robust metal 45 degree cantalev[illegible] which helps eliminate blind spots inherent to conventional PTZ speed domes.

1.3 ~~The camera metal ball housing shall have an optically optimised flat window with wiper for distortion-free optical clarity in wet, rainy environments.~~

1.4 The camera shall be IP68 / NEMA 4X certified for performance in extreme environments.

1.5 The camera shall incorporate precision zoom optics with a day-night mechanical filter technology for outstanding performance in either visible light or under active infrared illumination.

1.6 The camera shall incorporate brushless motor technology for precision speed control and accuracy, greater mechanical stability, longer operational lifetime and whisper-quiet operation.

1.7 The camera shall be compatible with various industry-standard communications protocol including Pelco P/D.

1.8 The camera shall be suitable for either surface, pole, upside down ceiling, or corner-mounted applications.

1.9 The camera shall be energy efficient.

1.10 The camera shall operate with high reliability.

1.11 The camera shall have been rigorously tested and proven for use by the manufacturer.

1.12 When used, the infrared illuminator shall have a three year product warranty and be supported by a comprehensive technical support program from the manufacturer.

2. Performance

2.1 The camera shall provide IP68 / NEMA 4X certified performance for full functionality in extreme environments.

2.2 The camera shall be environmentally sealed for total protection against dust ingress and water immersion.

2.3 The camera shall incorporate brushless motor technology for precision speed control and accuracy, greater mechanical stability, longer operational lifetime and whisper-quiet operation.

2.4 The camera shall deliver outstanding optical performance through a tempered flat glass window with high transmissivity of visible and infrared light.

2.5 The camera shall have a small mechanical window wiper operable by remote control for distortion-free optical clarity in wet, rainy environments.

2.6 The camera shall be an 1/4" LXR type CCD for excellent IR sensitivity, low smear, low streak and excellent anti-blooming characteristics.

2.7 The camera shall have 768 x 494 effective pixels.

2.8 The camera shall have a motorized mechanical infrared filter to ensure accurate color reproduction during day and effective imaging under infrared illumination by night.

2.9 The camera shall have a 2:1 interlaced scanning system.

2.10 The camera shall have DSP signal processing for enhanced edge definition and detail reproduction.

2.11 The camera shall produce outstanding contrast characteristics for reduced glare and streaking.

2.12 The camera shall have daytime color mode.

2.13 The camera shall have daytime color resolution of 470 horizontal lines.

2.14 The camera shall have night-time monochrome mode.

2.15 The camera shall have a minimum illumination of 0.7 Lux @ F1.4, 1/60s

2.16 The camera shall operate at zero lux in night-time monochrome mode when used in combination with appropriate infrared illuminators.

REGISTERED PROFESSIONAL ENGINEER
BEN EDALATI
No. 14761
EXP. 3/09
ELECTRICAL
STATE OF CALIFORNIA

2.17 The camera design shall virtually eliminate focus shift to ensure accurate focus for a daytime average wavelength of 500nm and a night-time average wavelength of 850nm.

2.18 The camera shall have spectral response to infrared wavelengths between 700nm to 1100nm.

2.19 The camera shall produce accurate color representation by eliminating blooming and other color distortions.

2.20 The camera shall use frame integration to produce strong images under low-light conditions.

2.21 The camera shall have an optional 18x motorized optical zoom (focal length 4.1mm to 73.8mm) and 12x digital zoom.

2.22 The camera shall have an optional 36x motorized optical zoom (focal length 3.4mm to 122.4mm) and 12x digital zoom.

2.23 The camera shall produce a 48° horizontal field of view (HFV) at wide angle and 2.8° HFV at telephoto with 18x zoom.

2.24 The camera shall produce a 57.8° horizontal field of view (HFV) at wide angle and 1.7° HFV at telephoto with 36x zoom.

2.25 The camera shall have an integrated lens drive unit.

2.26 The camera shall a focus system that can be set to either automatic or manual mode.

2.27 The camera shall have an integrated pan tilt motor drive unit.

2.28 The camera shall have closed loop speed control for accurate speed control at both wide angle and telephoto.

2.29 The camera shall be capable of 360° continuous rotation.

2.30 The camera shall have a tilt range of 320° allowing either surface- or ceiling-mounted installations.

2.31 The camera shall have the tilt mechanism integrated into two robust support arms and the metal powerdome head.

2.32 The camera shall have a Pan-Tilt speed ranging up to 90° per second.

2.33 The camera shall be equipped with a RS485 / 422 connection.

2.34 The camera shall have 64 configurable Pan-Tilt-Zoom presets.

2.35 The camera shall have 6 Pan-Tilt-Zoom preset tours.

2.36 The camera shall be equipped with high precision resolver technology for high repeatability.

2.37 The camera shall have Pan-Tilt preset accuracy of better than 0.08°.

2.38 The camera shall be equipped with Pelco P/D communications protocol as standard with other industry standard protocols available as options.

3. Power Requirements

3.1 The camera shall be equipped with a dedicated power supply unit.

3.2 The dedicated power supply unit shall be available in models that accept input voltages of 120VAC, 240VAC, 12-24VDC or 24VAC.

3.3 The camera shall consume no more than 25.2 watts maximum.

3.4 The camera shall be equipped with 2m, 10m or 25m cable lengths (6.5ft, 32ft or 82ft)

4. Environmental

4.1 The camera housing shall be constructed of CNC-milled powder coated 6mm thick aluminum.

4.2 The camera shall be optionally configured at the factory with a 45° yoke that allows images to be captured from directly below the camera.

4.3 The camera housing shall be environmentally sealed.

4.4 The camera housing shall be weatherproof.

4.5 The camera housing shall be waterproof.

4.6 The camera housing shall be dustproof.

4.7 The camera housing shall be corrosion resistant.

4.8 The camera shall have an operating temperature range of -20°C to +60°C

4.9 The camera shall include an internal heater for effective temperature control.

4.10 The camera shall weigh no more than 10lbs /4.5kg.

4.11 The camera shall have a steel ball diameter of 165mm (6.5").

4.12 The camera shall have an overall height of 358mm (14.1").

4.13 The camera shall have a width of 202mm (8.0") across the two support arms.

4.14 The camera shall have a black or grey aluminium finish suitable for all-weather operation.

4.15 ~~The camera shall have an integrated window wiper with replaceable rubber blade~~.

4.16 The camera shall be compatible with base, wall and corner mount brackets.

5 Standards Compliance

5.1 The camera shall be compliant to NEMA 4X.

5.2 The camera shall be compliant to IP68.

REGISTERED PROFESSIONAL ENGINEER
BEN EDALATI
No. 14761
EXP. 2/09
ELECTRICAL
STATE OF CALIFORNIA

CONTRACT NO. 04-0120R4

CONTRACT CHANGE ORDER NO 203

SHEET 6 OF 22

Description	24 V DC DIN rail power supply unit
Power Input Data	
	100-240 V AC (+/-15%); 50-60Hz or 110 to 300 V DC (-20/+25%)
Current consumption	
	max. 1.8-1.0 A at 100-240 V AC max. 0.85 - 0.3 A at 110 - 300 V DC
Activation current	< 13 A at 230 V AC
Power Output data	
Output voltage	24 - 28 V DC (typ. 24.1 V) external adjustable
Output current	
	3,4-3,0 A continuous min 5,0-4,5 A for typ. 4 sec
Diagnostics	LED (DC OK, Overload)
Redundancy	
Redundancy functions	Power supply units can be connected in parallel
Ambient conditions	
Operating temperature	-25 °C to +70 °C (ab 60 °C Derating)
Storage/transport temperature	-40 °C to +85 °C
Relative humidity (non-condensing)	5 to 95 %
Mechanical construction	
Dimensions (W x H x D)	No larger than 35 mm x 125 mm x 105 mm
Mounting	DIN Rail 35 mm
Protection class	IP 20
EMC interference immunity	
EN 50082-1	EN 61000-6-1
EN 50082-2	EN 61000-6-2 (includes EN 55024)
EMC emitted immunity	
EN 50081-1	EN 61000-3-2, 61000-3-3, 61000-6-3, 61000-6-4
Approvals	
Safety of industrial control equipment	cUL 508 (E 198865)
Safety of information technology equipment	cUL 60950 (E 137006)
Hazardous locations	UL 1604 Class 1 Div. 2 (E246877)

CONTRACT NO. 04-0120R4

CONTRACT CHANGE ORDER NO 203

SHEET 7 OF 22

Video Encoder 1 channel

Video/Audio Ports, Connections and Interfaces

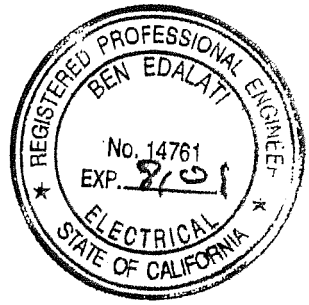

1USB
1 Video input BNC
1-channel audio input
1-channel audio output
LED HDD
LED connect
SFP GBIC
Compact flash
Ethernet TX Port RJ45
4 Alarm input
Relay output
Serial interface and power input connector block
LED Power on

Video Specification

Video compressionstandards
MPEG4, MJPEG, JPEG

Video data rate
IP BASES 9.6 kbps to 6 Mbps per channel

Video resolution and frame rate (PAL/NTSC)
4CIF (704 x 576/480) 25/30 ips4CIF (704 x 576/480) 12.5/15 ips, 2CIF (704 x 288/240) 25/30 ips, 2/3 D1 (464 x 576/480) 25/30 ips, 1/2 D1 (352 x 576/480) 25/30 ips, CIF (352 x 288/240) 25/30 ips, QCIF (176 x 144/120) 25/30 ips

Overall Video Delay 120m/sec

75 ohm switchable

Technical Specification

Din Rail Mounting Bracket Included

Electrical Power supply
Stand-alone, exclusive, or external battery Input voltage10 to 30 VDC

Environmental Operating Temperature
-30 °C to +60 °C (-22 °F to +140 °F)ambient temperature Humidity0 to 95% atmospheric humidity,non-condensing

Network

Ethernet Dual port 10/100 Base-T
Auto-sensing
Half/fullduplex RJ45
Protocols RTP, Telnet, UDP, TCP, IP, HTTP, HTTPS, IGMPV2/V3, ICMP, ARP, SNTP, SNMP (V1/V2c/V3MIB-II)

Encryption

TLS 1.0, SSL, AES

CONTRACT NO. 04-0120123

CONTRACT CHANGE ORDER NO 203

Control

SHEET 8 OF 22

Software update
Flash ROM
Remote programmable
Configuration Manager or web browser

GENERAL NOTES

1. All electrical work shall conform to (1999 and 2004) the latest issue of State of California Department of Transfortation Standard Specifications and Standard Plans. These general notes and special provisions under this contract also apply. For any conflict of provisions, California State Guidlines apply.
2. All conduit routing is shown diagrammatically. Pull box locations are located and shown on plan drawings. The contractor shall provide additional pull boxes as required. Exact location of equipment and devices may be adjusted by field conditions or as directed by the Engineer.
3. Minimum conduit sizes shall be 21 mm. All conduits located outside shall be rigid galvanized steel, PVC coated.
4. All equipment and devices shall be provided with nameplate tags as shown in the drawings.
5. All feeders and branch circuits shall be provided with an equipment ground wire.
6. The Contractor shall label all conductors and cables per cable schedules.
7. The Contractor shall provide all conduits with permanent field markers and labels
8. The Contractor shall provide and install new armored cables on metal racks, troughs, in cable trays or secured to supports spaced not greater than 1500 mm apart.
9. The Contractor shall provide splice boxes for armored cables.
10. For other related work not shown on the plan sheets, see Electrical Special Provision.
11. Contractor to verify all controlling field dimensions before ordering or fabricating any material.
12. Provide and install new armored cables or conduit as shown, scheduled and as needed in construction. Support cables or conduit from surface using 41x41 channel, hot dipped galvanized and appropriate strut mounted clamps. See Detail. Support armored cables or conduit horizontally along Temporary Bypass Structure (TBS) using steel ladder cable trays.
13. New cable will be completely routed and tested before cutting existing circuits and/ or interconnecting new.
14. Existing temporary FO cables installed on Southgate Road wall and by YBI Substation project are to be removed by Caltrans after new FO cables are installed and operational.
15. Contractor to provide expansion fittings or loops at bridge expansion joints or points of deflection. Provide stainless steel support grips to hold the weight of electrical cable as it loops or hangs in vertical, sloping or horizontal position.
16. All materials and equipment are subject to Engineers written approval. (1)

PROJECT NOTES

[1] Install new FO cable (Outdoor Optical Cable 6F MM 62.5/125")on cable tray. Secure cable with cable clamps every 1.5 meter.

[2] Install new 41C type 4 conduit with FO cable (" Optical Cable 12F MM 62.5/125") and armored cable with (2#6+1#8G)on cable tray. Secure cables with cable clamps every 1.5 meter. (1)

[3] Install CCTV camera (1) with PTZ, shoe mount on existing type 15 standard on upper deck. See mounting details on E-12 for more information.

[4] Install new CCTV camera (1) with PTZ, shoe mount on the lower deck at the vertical truss structure. See mounting detail on E-12 for more information.

[5] Remove existing one 20A-1P circuit breakers 21 and replace with new 30A-1P circuit breaker to match existing. Label breaker " Cameras". (1)

[6] Install new fiberglass NEMA 4X enclosure wth 610W x 610L x 203D min dimension for communication box . Secure boxes on the outside face of the vertical steel truss with beam clamps and unistrut. Provide (2) 41mm nipples between boxes. See block diagram on E-10 and mounting detail on E-12 for more information.

[7] Contractor shall pull 4.0 meters of FO cable and coil inside the box. Contractor shall splice pigtail connectors and test. Provide test result. Caltrans will do the final connction to patch panel.

[8] Install new 41C type 4 conduit with FO cable (Outdoor Optical Cable 12F MM 62.5/125). (1)

[9] Install new FO cable (Outdoor Optical Cable 12F MM 62.5/125) Provide 7.5 meters of cable length, coiled and tie-wrap above existing ( )controller cabinet at YBI substation. (1)

[10] Install new fiberglass NEMA 4X enclosure wth 610W x 610L x 203D min dimension for Fiber box . Secure boxes on the outside face of the vertical steel truss with beam clamps and unistrut. Provide (2) 41mm nipples between boxes. See block diagram on E-10 and mounting detail on E-12 for more information.

ABBREVIATIONS

NOT LISTED IN CALTRANS STANDARD PLANS ES-1A AND ES-1B

CB	Call Box
CEC	California Electrical Code
COM	Communication
Cont'd	Continued
EB	Eastbound
(E), Exist	Existing
FDU	Fiber Distribution Unit
FSC	Fiber Splice Closure
FTC	Fiber Optic Trunkline Cable
FO	Fiber Optic
G, GND, Gnd	Ground (ground cable)
GRS	Galvanized Rigid Steel
JB	Junction Box
kV	kilovolt
LD	Lower Deck
mh	Man Hole
N.E.C.	National Electrical Code
PP	Patch Panel
PR	Pair
PWR	Power
SFOBB	San Francisco Oakland Bay Bridge
SHLD, Shld	Shield
Term	Terminal
UD	Upper Deck
V	Volt
W	Wire
WB	Westbound
YBI	Yerbo Buena Island

SYMBOLS

NOT LISTED IN CALTRANS STANDARD PLANS ES-1A, ES-2B AND ES-1C

(1)	Sheet Notes, applicable only to the Drawing 1=Sequential number
[2]	Project notes, applicable for all drawings.
———	Conduit or Cable run, exposed
- - - -	Conduit run concealed in wall, concrete barrier, slab or routed underground duct bank

Metric

DIST	COUNTY	ROUTE	KILOMETER POST TOTAL PROJECT	SHEET NO	TOTAL SHEETS
04	SF	80			

Carol Light 04/09/09
REGISTERED ELECTRICAL ENGINEER DATE

PLANS APPROVAL DATE

REGISTERED PROFESSIONAL ENGINEER — CAROL LIGHT — NO. 10145 — Exp.09/30/09 — ELECTRICAL — STATE OF CALIFORNIA

PB Americas, Inc.
303 Second St., Suite 700N
San Francisco, CA 94107-1317

SILVERMAN & LIGHT
1201 PARK AVENUE - SUITE 100
EMERYVILLE, CA 94608-3632

The State of California or its officers or agents shall not be responsible for the accuracy or completeness of electronic copies of this plan sheet.

Caltrans now has a web site! To get to the web site, go to http://www.dot.ca.gov

DRAWING No.	DRAWING TITLE
E-1	ELECTRICAL SHEET INDEX, SYMBOLS, PROJECT NOTES SSD(CAMERAS) (1)
E-2	WESTBOUND-ELECTRICAL SSD(CAMERAS) (1)
E-3	WESTBOUND-ELECTRICAL SSD(CAMERAS) (1)
E-4	WESTBOUND-ELECTRICAL SSD(CAMERAS) (1)
E-5	WESTBOUND-ELECTRICAL SSD(CAMERAS) (1)
E-6	EASTBOUND-ELECTRICAL SSD(CAMERAS) (1)
E-7	EASTBOUND-ELECTRICAL SSD(CAMERAS) (1)
E-8	EASTBOUND-ELECTRICAL SSD(CAMERAS) (1)
E-9	EXISTING YBI SUBSTATION SSD(CAMERAS) (1)
E-10	CCTV SYSTEM COMMUNICATION SSD(CAMERAS) (1)
E-11	DETAILS PIER E1 ELEVATION SSD(CAMERAS) (1)
E-12	MISCELLANEOUS ELECTRICAL DETAILS CCTV MOUNTING
E-13	MISCELLANEOUS ELECTRICAL DETAILS JUCTION BOXES
E-14	MISCELLANEOUS ELECTRICAL DETAILS TYPICAL CONDUIT/CABLE SUPPORTS

REGISTERED PROFESSIONAL ENGINEER — CAROL LIGHT — NO. 10145 — Exp.09/30/09 — ELECTRICAL — STATE OF CALIFORNIA

MARK	DATE	DESCRIPTIONS	REV	CK
		REVISIONS		
1	06/09/09	SSD CAMERA SYSTEM	BJ	CL

CONTRACT CHANGE ORDER NO. 203
SHEET 9 OF 22

ELECTRICAL SHEET INDEX, SYMBOLS AND PROJECT NOTES

SSD-CAMERAS (1)

NO SCALE

E-1

CALCULATED/ DESIGNED BY	CHECKED BY	DATE	BJ	CL	REVISED BY	DATE REVISED

DESIGN OVERSIGHT

STATE OF CALIFORNIA - DEPARTMENT OF TRANSPORTATION

Caltrans

FILE: 11:\2120\3\eng\electrical\con3\2103ssd15.dgn
DATE: 11-Jul-00 13:34

DATE PLOTTED => &DATE
TIME PLOTTED => &TIME
LAST REVISION 00-00-00

THIS PLAN ACCURATE FOR ELECTRICAL WORK ONLY

FOR REDUCED PLANS ORIGINAL SCALE IS IN MILLIMETERS 0 20 40 60 80

DGN FILE => &REQUEST
USERNAME => &USER

CU 04251

EA 0120R3

4120R3uaE01.dgn 7/30/2009 4:19:09 PM

SHEET NOTES:

1. Install new FO cable (Outdoor Optical Cable 12F MM 62.5/12.5) in (E) empty 103 mm conduit (conduit no. 0303) via (E) vault 2B and 2A.
2. Install new armored cable, 2#6 and 1#8G (120 V, CCTV) in (E) empty 103 mm conduit (conduit no. 0405) via (E) vault 2B and 2A.
3. Route new armored cable with 2#8 + 1#10G and 4IC(type 4) with FO cable along inside face of tunnel wall to (E) 103mm extension from vault 2A.
4. Caltrans will remove existing temporary conduit with FO cable from (E) AT&T pull box to YBI substation mounted on surface structure via (E) pb-1 and mh-3 when new FO cable is installed and operational.
5. Transition to tunnel wall to exposed face of abutment, then rise to cable tray at south edge of westbound roadway. Provide expansion fittings or loops at bridge expansion joints or points of depletion.
6. Install two new 4IC type 4 conduits with 1 FO cable (Outdoor Optical Cable 12F M 62.5/125)each. See Comm system block diagram for more information.
7. Install new armored cable, 2#6 and 1#8G (120 V, CCTV) in (E) cable tray system.

(E)vault #2B
(E)vault #2A
(N)Pull box
(E)tb-20W
(CKT #21)
(E)mh-1 (15 kV)
(E)mh-2 (600 V)
(E)mh-3 (TOS & COM)
(E)pb-1
(E)Panel-UP01
(E)BASE Controller
See enlarged plan E-9
WD1 LINE
WDR1 LINE
SSD-YBI 1/ WD1 51+00
Down to comm box #1
Down to fiber box #1
SEE SHEET E-3
50+60
UPPER DECK

NOTES:

1. Reference:
   - -for CCTV system block diagram, see Sheet E-10.
   - -for mounting details, see Sheet E-12.
   - -for conduit schedule, see E-69 of Contract No. 04-0120G4
2. Contractor shall splice pigtail connectors to fiber and test fiber cable. Provide result of test with new connectors. CT will make connection to equipment.

ALL DIMENSIONS ARE IN METERS UNLESS OTHERWISE SHOWN

THIS PLAN ACCURATE FOR ELECTRICAL WORK ONLY

FOR REDUCED PLANS ORIGINAL 0 20 40 60 80

DGN FILE =>BASE_E02.mer

Caltrans Metric

Carol Light 04/09/09
REGISTERED ELECTRICAL ENGINEER DATE
PLANS APPROVAL DATE
CAROL LIGHT No. 10145 Exp. 09/30/09 ELECTRICAL STATE OF CALIFORNIA

PB Americas, Inc.
303 Second St., Suite 700N
San Francisco, CA 94107-1317

SILVERMAN & LIGHT
1201 PARK AVENUE - SUITE 100
EMERYVILLE, CA 94608-3632

The State of California or its officers or agents shall not be responsible for the accuracy or completeness of electronic copies of this plan sheet.

Caltrans now has a web site! To get to the web site, go to http://www.dot.ca.gov

MARK	DATE	REVISIONS	REV	CK
1	06/09/09	SSD CAMERA SYSTEM	BJ	CL

CONTRACT CHANGE ORDER NO. 203
SHEET 10 OF 22

WESTBOUND ELECTRICAL SSD CAMERAS

SCALE: 1:250

E-2

DATE	REVISED BY	DATE REVISED
CALCULATED/ DESIGNED BY	BJ	CL
CHECKED BY		

STATE OF CALIFORNIA - DEPARTMENT OF TRANSPORTATION
DESIGN OVERSIGHT
Caltrans

CALCULATED/ DESIGNED BY	BJ	DATE	REVISED BY
CHECKED BY	CL		DATE REVISED

STATE OF CALIFORNIA - DEPARTMENT OF TRANSPORTATION
Caltrans
DESIGN OVERSIGHT

CAROL LIGHT
No. 10145
EXP. 09/30/09
ELECTRICAL
STATE OF CALIFORNIA

MARK	DATE	REVISIONS	BJ	CL
1	06/09/09	SSD CAMERA SYSTEM	REVISED	CK

CONTRACT CHANGE ORDER NO. 203
SHEET 11 OF 22

Caltrans
Metric

Carol Light 04/09/09
REGISTERED ELECTRICAL ENGINEER DATE

PLANS APPROVAL DATE

CAROL LIGHT
No. 10145
EXP. 09/30/09
ELECTRICAL
STATE OF CALIFORNIA

PB Americas, Inc.
303 Second St., Suite 700N
San Francisco, CA 94107-1317

SILVERMAN & LIGHT
1201 PARK AVENUE - SUITE 100
EMERYVILLE, CA 94608-3632

The State of California or its officers or agents shall not be responsible for the accuracy or completeness of electronic copies of this plan sheet.

Caltrans now has a web site! To get to the web site, go to http://www.dot.ca.gov

NOTES:

1. Reference:

   -for CCTV system block diagram, see Sheet E-10.

   -for mounting details, see Sheet E-12.

2. Contractor shall splice pigtail connectors to fiber and test fiber cable. Provide result of test with new connectors. CT will make connection to equipment.

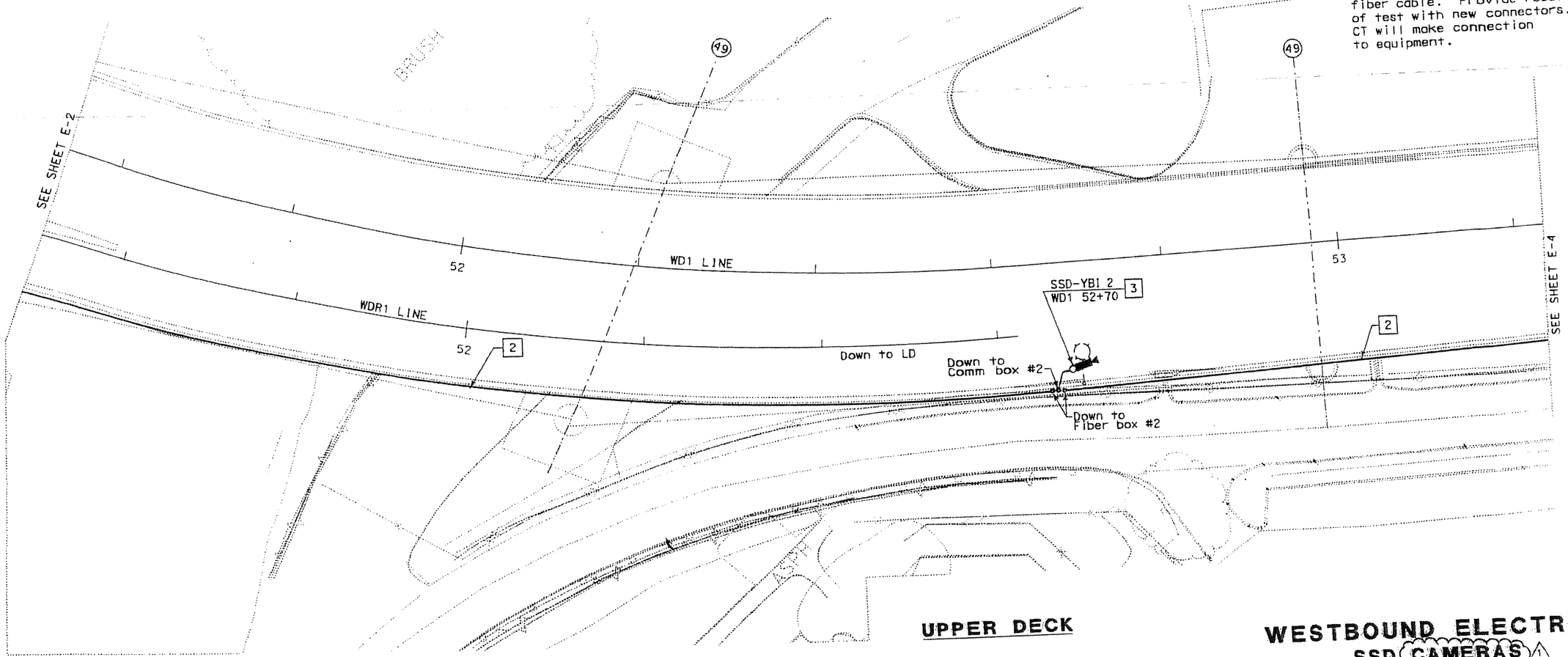

UPPER DECK

WESTBOUND ELECTRICAL
SSD CAMERAS 1
SCALE: 1:250

E-3

ALL DIMENSIONS ARE IN METERS UNLESS OTHERWISE SHOWN

THIS PLAN ACCURATE FOR ELECTRICAL WORK ONLY

0 20 40 60 80

DGN FILE =>BASE_E03.mer

EA 012083

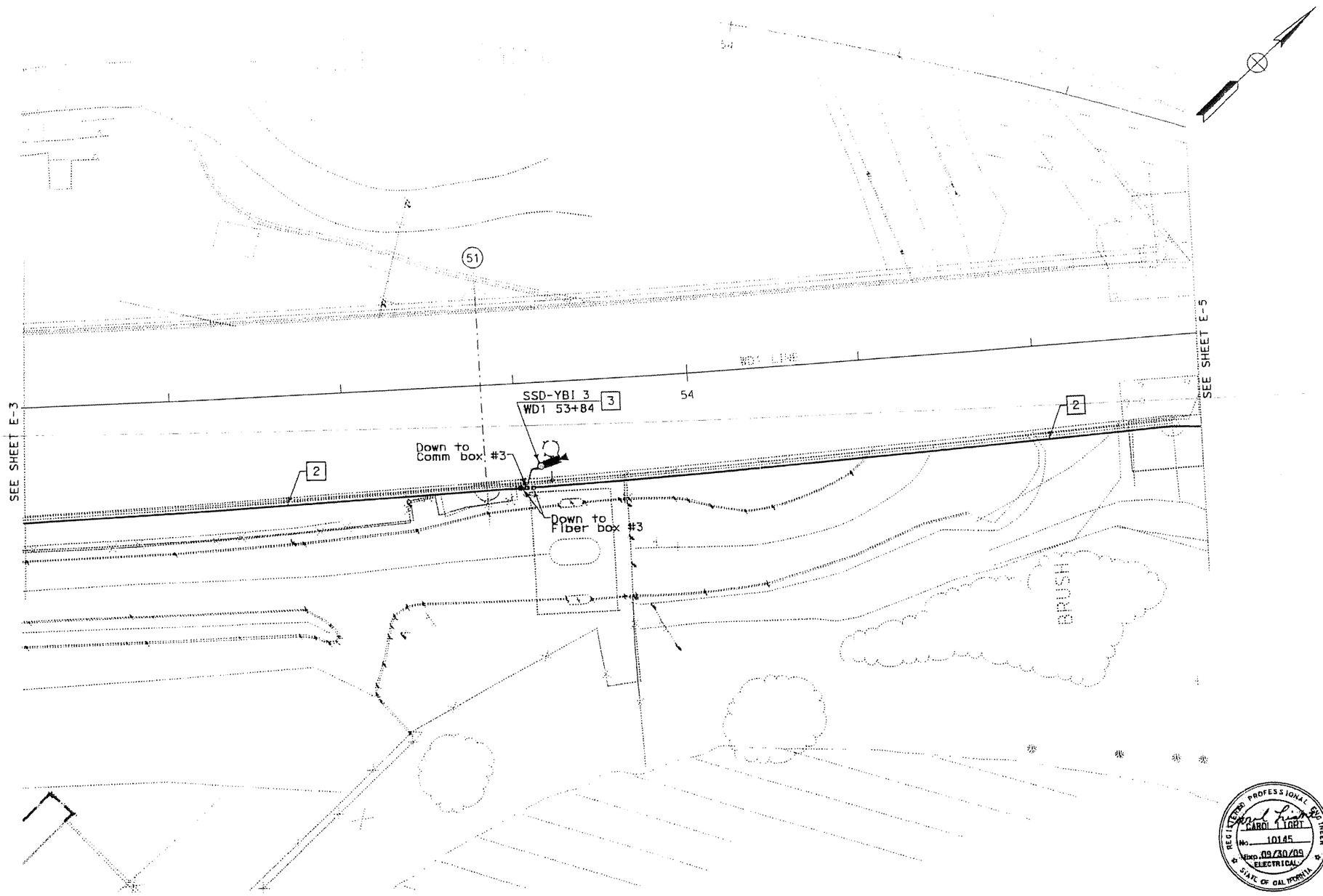

UPPER DECK

Caltrans Metric

Carol Light 04/09/09
REGISTERED ELECTRICAL ENGINEER DATE

CAROL LIGHT No. 10145 Exp. 09/30/09 ELECTRICAL STATE OF CALIFORNIA

PLANS APPROVAL DATE

PB Americas, Inc.
303 Second St., Suite 700N
San Francisco, CA 94107-1317

SILVERMAN & LIGHT
1201 PARK AVENUE - SUITE 100
EMERYVILLE, CA 94608-3632

The State of California or its officers or agents shall not be responsible for the accuracy or completeness of electronic copies of this plan sheet.

Caltrans now has a web site! To get to the web site, go to http://www.dot.ca.gov

NOTES:

1. Reference:
   - for CCTV system block diagram, see Sheet E-10.
   - for mounting details, see Sheet E-12.
2. Contractor shall splice pigtail connectors to fiber and test fiber cable. Provide result of test with new connectors. CT will make connection to equipment.

MARK	DATE	DESCRIPTIONS	REV	CK
1	06/09/09	SSD CAMERA SYSTEM	BJ	CL

REVISIONS

CONTRACT CHANGE ORDER NO. 203
SHEET 12 OF 22

WESTBOUND ELECTRICAL
SSD CAMERAS 1
SCALE: 1:250

E-4

ALL DIMENSIONS ARE IN METERS UNLESS OTHERWISE SHOWN

THIS PLAN ACCURATE FOR ELECTRICAL WORK ONLY

FOR REDUCED PLANS ORIGINAL SCALE IS IN MILLIMETERS 0 20 40 60 80

DGN FILE => BASE_E04.mer

STATE OF CALIFORNIA - DEPARTMENT OF TRANSPORTATION

Caltrans

DESIGN OVERSIGHT

CALCULATED/DESIGNED BY BJ DATE REVISED BY
CHECKED BY CL DATE REVISED

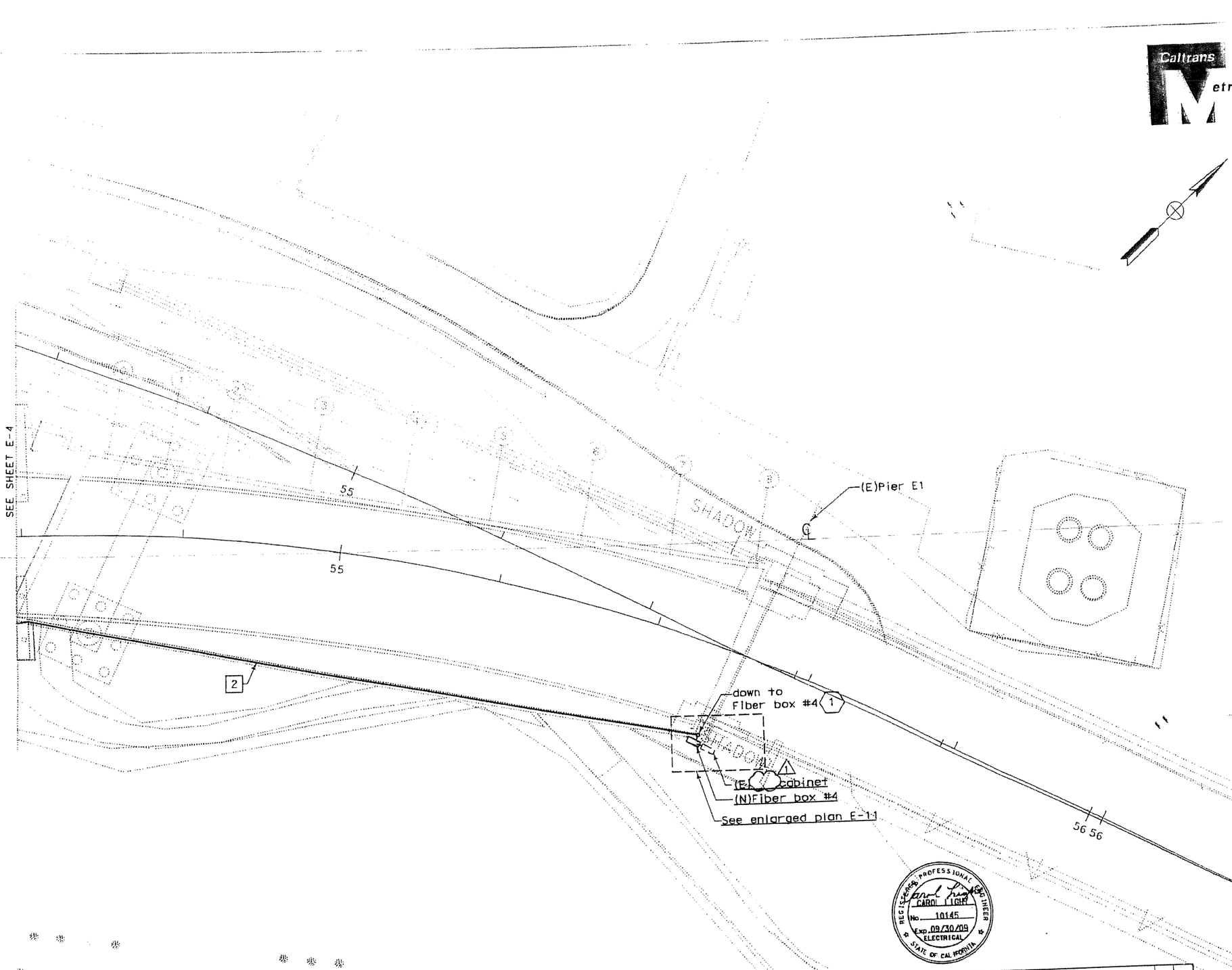

UPPER DECK

Caltrans Metric

Caltrans Engineer Signature: Carol Light — 04/09/09
CAROL LIGHT No. 10145 Exp. 09/30/09 ELECTRICAL — STATE OF CALIFORNIA
PLANS APPROVAL DATE

PB Americas, Inc.
303 Second St., Suite 700E
San Francisco, CA 94107-1317

SILVERMAN & LIGHT
1201 PARK AVENUE - SUITE 100
EMERYVILLE, CA 94608-3632

The State of California or its officers or agents shall not be responsible for the accuracy or completeness of electronic copies of this plan sheet.

Caltrans now has a web site! To get to the web site, go to http://www.dot.ca.gov

NOTES:

1. Reference:

   -for CCTV system block diagram, see Sheet E-10.

   -for mounting details, see Sheet E-12.

2. Contractor shall splice pigtail connectors to fiber and test fiber cable. Provide result of test with new connectors. CT will make connection to equipment.

SHEET NOTES:

(1) Route new 41C type 4 conduit with FO cable and armored cable with 2#6+1#8G from Fiber box #3 to Fiber box #4 and terminate at (E) cabinet. Provide cable support every 1.5 meters. Verify in field exact cabinet location.

Engineer Signature: Carol Light — CAROL LIGHT No. 10145 Exp. 09/30/09 ELECTRICAL — REGISTERED PROFESSIONAL ENGINEER — STATE OF CALIFORNIA

MARK	DATE	DESCRIPTIONS REVISIONS	REV	CK
1	06/09/09	SSD CAMERA SYSTEM	BJ	CL

CONTRACT CHANGE ORDER NO. 203
SHEET 13 OF 22

WESTBOUND ELECTRICAL
SSD CAMERAS (1)

SCALE: 1:250

E-5

CALCULATED/ DESIGNED BY	BJ	DATE	REVISED BY
CHECKED BY	CL		DATE REVISED

STATE OF CALIFORNIA - DEPARTMENT OF TRANSPORTATION — DESIGN OVERSIGHT

Caltrans

THIS PLAN ACCURATE FOR ELECTRICAL WORK ONLY

FOR REDUCED PLANS ORIGINAL 0 20 40 60 80

ALL DIMENSIONS ARE IN METERS UNLESS OTHERWISE SHOWN

DGN FILE => BASE_E05.mer

CU 04351 EA 012083

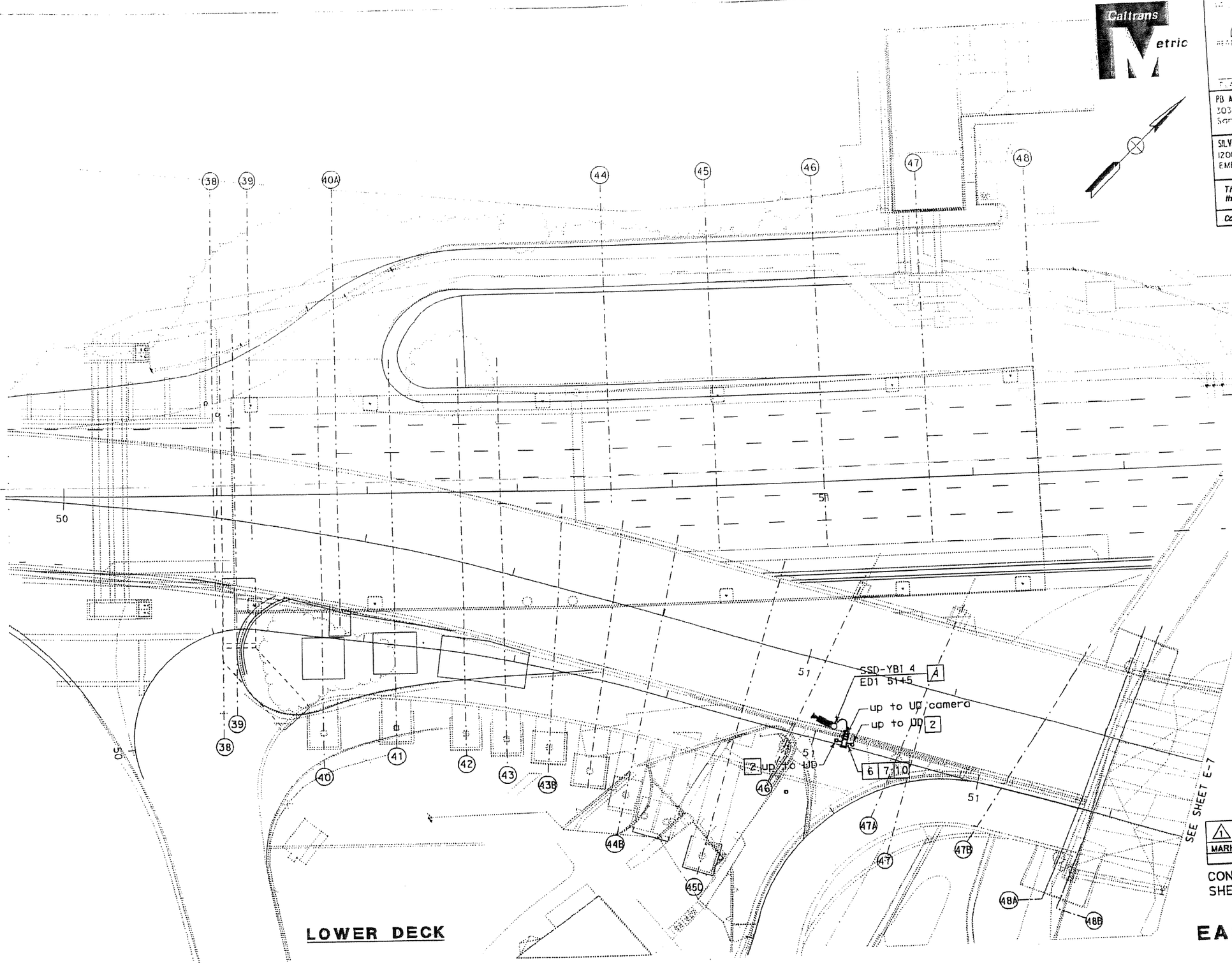

Caltrans Metric

Carol Light 04/09/09
REGISTERED ELECTRICAL ENGINEER DATE

CAROL LIGHT No. 10145 Exp. 09/30/09 ELECTRICAL STATE OF CALIFORNIA

PLANS APPROVAL DATE

PB Americas, Inc.
303 Second St., Suite 700A
San Francisco, CA 94107-1317

SILVERMAN & LIGHT
1201PARK AVENUE - SUITE 100
EMERYVILLE, CA 94608-3632

The State of California or its officers or agents shall not be responsible for the accuracy or completeness of electronic copies of this plan sheet.

Caltrans now has a web site! To get to the web site, go to http://www.dot.ca.gov

NOTES:

1. Reference:

   -for CCTV system block diagram, see Sheet E-10.

   -for mounting details, see Sheet E-12.

2. Contractor shall splice pigtail connectors to fiber and test fiber cable. Provide result of test with new connectors. CT will make connection to equipment.

CALCULATED/DESIGNED BY: BJ
CHECKED BY: CL

MARK	DATE	REVISIONS	BY	CK
1	06/09/09	SSD CAMERA SYSTEM	BJ	CL

DESCRIPTIONS: REVISED BY / DATE REVISED

STATE OF CALIFORNIA - DEPARTMENT OF TRANSPORTATION
Caltrans
DESIGN OVERSIGHT

CAROL LIGHT No. 10145 Exp. 09/30/09 ELECTRICAL STATE OF CALIFORNIA

CONTRACT CHANGE ORDER NO. 203
SHEET 14 OF 22

EASTBOUND ELECTRICAL SSD CAMERAS 1

SCALE: 1"=30'

E-6

THIS PLAN ACCURATE FOR ELECTRICAL WORK ONLY

ALL DIMENSIONS ARE IN METERS UNLESS OTHERWISE SHOWN

0 20 40 60 80

DGN FILE =>BASE_E06.mer
USERNAME =>bjud

CU 04351 EA 012083

CAROL LIGHT
No. 10145
Exp. 09/30/09
ELECTRICAL

MARK	DATE	DESCRIPTIONS	REVI	CK
		REVISIONS		
1	06/09/09	SSD CAMERA SYSTEM	BJ	CL

CONTRACT CHANGE ORDER NO. 203
SHEET 15 OF 22

NOTES:

1. Reference:
   - for CCTV system block diagram, see Sheet E-10.
   - for mounting details, see Sheet E-12.
2. Contractor shall splice pigtail connectors to fiber and test fiber cable. Provide result of test with new connectors. CT will make connection to equipment.

Caltrans Metric

SF | 80

Carol Light 04/09/09
REGISTERED ELECTRICAL ENGINEER DATE

FINAL APPROVAL DATE

CAROL LIGHT
No. 10145
Exp. 09/30/09
ELECTRICAL

PB Americas, Inc.
303 Second St., Suite 700N
San Francisco, CA 94107-1317

SILVERMAN & LIGHT
1201 PARK AVENUE - SUITE 100
EMERYVILLE, CA 94608-3632

The State of California or its officers or agents shall not be responsible for the accuracy or completeness of electronic copies of this plan sheet.

Caltrans now has a web site! To get to the web site, go to http://www.dot.ca.gov

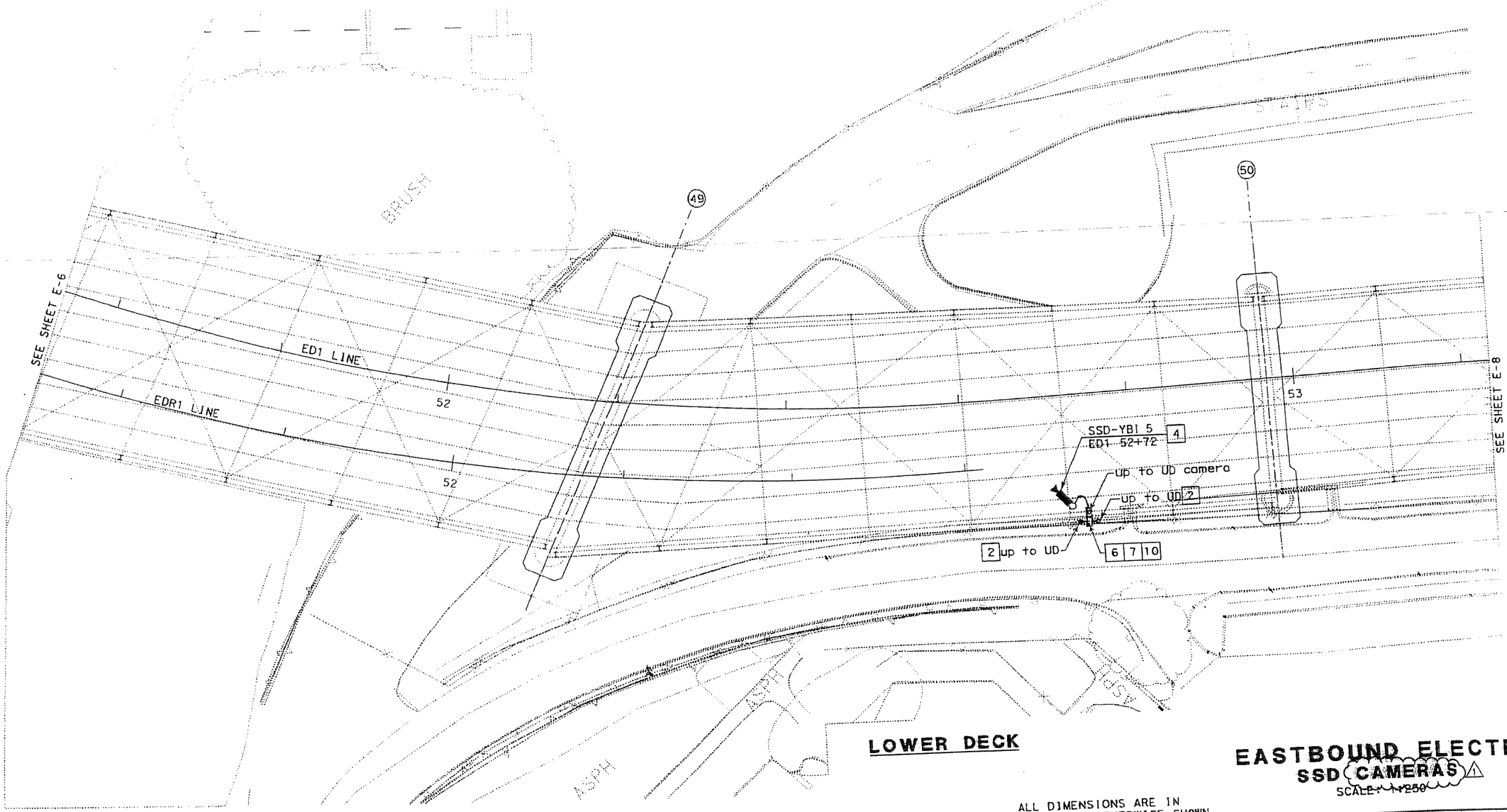

LOWER DECK

EASTBOUND ELECTRICAL SSD CAMERAS ⚠

SCALE: 1"=50'

E-7

ALL DIMENSIONS ARE IN METERS UNLESS OTHERWISE SHOWN

THIS PLAN ACCURATE FOR ELECTRICAL WORK ONLY

FOR REDUCED PLANS ORIGINAL
0 20 40 60 80

DGN FILE =>BASE_E07.mer
USERNAME =>bjud

CU 04251 | EA 0120R3

CALCULATED/ DESIGNED BY | BJ | DATE | REVISED BY
CHECKED BY | CL | | DATE REVISED

STATE OF CALIFORNIA - DEPARTMENT OF TRANSPORTATION
Caltrans
DESIGN OVERSIGHT

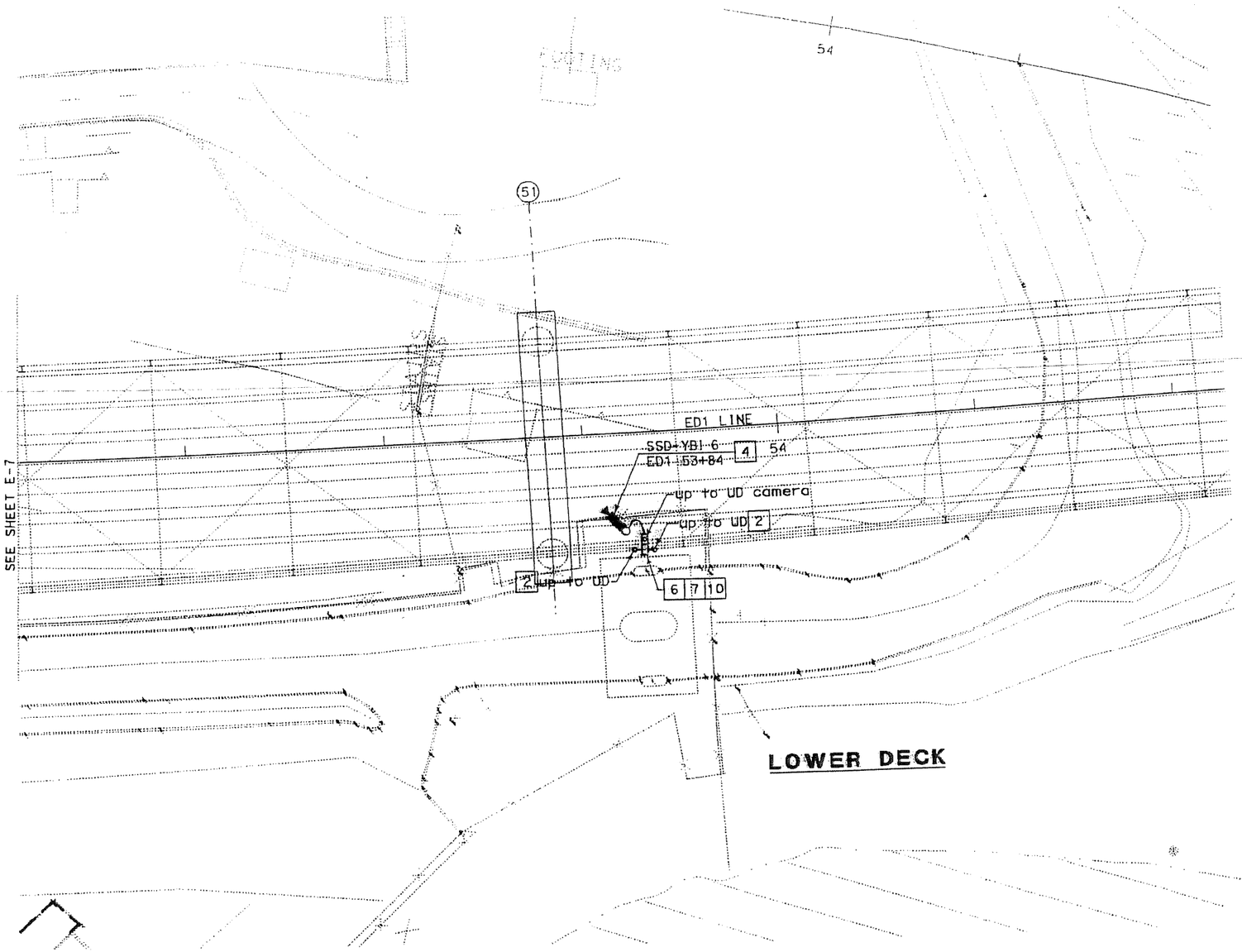

Caltrans Metric

Carol Light 04/30/09
REGISTERED ELECTRICAL ENGINEER DATE

CAROL LIGHT No. 10145 Exp.09/30/09 ELECTRICAL STATE OF CALIFORNIA

PLAN APPROVAL DATE

PB Americas, Inc.
303 Second St., Suite 700N
San Francisco, CA 94107-1317

SILVERMAN & LIGHT
1201 PARK AVENUE - SUITE 100
EMERYVILLE, CA 94608-3632

The State of California or its officers or agents shall not be responsible for the accuracy or completeness of electronic copies of this plan sheet.

Caltrans now has a web site! To get to the web site, go to http://www.dot.ca.gov

NOTES:

1. Reference:

   -for CCTV system block diagram, see Sheet E-10.

   -for mounting details, see Sheet E-12.

2. Contractor shall splice pigtail connectors to fiber and test fiber cable. Provide result of test with new connectors. CT will make connection to equipment.

MARK	DATE	DESCRIPTIONS	REV	CK
		REVISIONS		
1	06/09/09	SSD CAMERA SYSTEM	BJ	CL

CONTRACT CHANGE ORDER NO. 203
SHEET 16 OF 22

EASTBOUND ELECTRICAL SSD CAMERAS 1

SCALE: 1:250

E-8

THIS PLAN ACCURATE FOR ELECTRICAL WORK ONLY

ALL DIMENSIONS ARE IN METERS UNLESS OTHERWISE SHOWN

0 20 40 60 80

DGN FILE =>BASE_E08.mer

CU 04251 EA 013083

STATE OF CALIFORNIA - DEPARTMENT OF TRANSPORTATION
Caltrans
DESIGN OVERSIGHT

CALCULATED/DESIGNED BY
CHECKED BY
BJ CL
DATE DATE
REVISED BY DATE REVISED

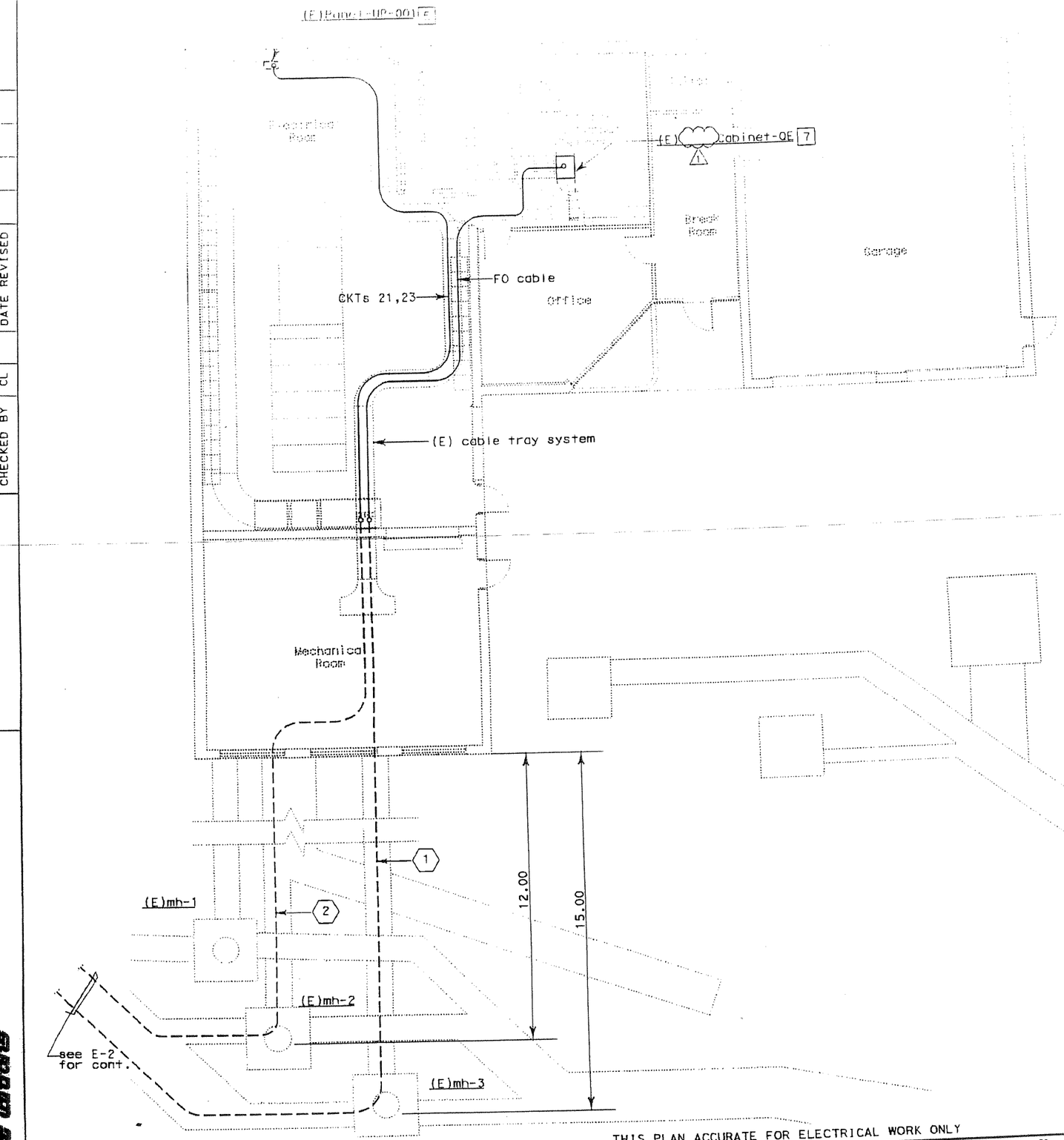

Caltrans Metric

PB Americas, Inc.
303 Second St., Suite 700N
San Francisco, CA 94107-1317

SILVERMAN & LIGHT
1201 PARK AVENUE SUITE 100
EMERYVILLE, CA 94608-3632

The State of California or its officers or agents shall not be responsible for the accuracy or completeness of electronic copies of this plan sheet.

Caltrans now has a web site! To get to the web site, go to http://www.dot.ca.gov

CAROL LIGHT No. 10145 Exp. 09/30/09 ELECTRICAL STATE OF CALIFORNIA

04/09/09

NOTE:

1. Contractor shall add fiber connectors to fiber and test fiber cable. Provide test result of test with new connectors. CT will make connectioon to equipment.

SHEET NOTES:

1. Install new FO cable (Outdoor Optical Cable 12F MM 62.5/12.5) in (E) empty 103mm conduit (conduit no. 0303) via (E) vault 2B and 2A.
2. Install new armored cable with 2#6 and 1#8G (120 V, CCTV) in (E) empty 103mm conduit (conduit no. 0405) via (E) vault 2B and 2A.

MARK	DATE	DESCRIPTIONS	REV	CK
1	06/09/09	SSD CAMERA SYSTEM	BJ	CL

REVISIONS

CONTRACT CHANGE ORDER NO. 203
SHEET 17 OF 22

EXISTING YBI SUBSTATION
SSD CAMERAS

SCALE: 1:75

E-9

ALL DIMENSIONS ARE IN METERS UNLESS OTHERWISE SHOWN

THIS PLAN ACCURATE FOR ELECTRICAL WORK ONLY

FOR REDUCED PLANS ORIGINAL

DGN FILE =>BASE_E09.mer

CU 04251

EA 0120R3

STATE OF CALIFORNIA - DEPARTMENT OF TRANSPORTATION

Caltrans

DESIGN OVERSIGHT

CALCULATED/DESIGNED BY BJ DATE

CHECKED BY CL

REVISED BY

DATE REVISED

MARK	DATE	DESCRIPTIONS	BY	CK
		REVISIONS		
1	06/09/09	SSD CAMERA SYSTEM	BJ	CL

CONTRACT CHANGE ORDER NO. 203
SHEET 18 OF 22

CAROL LIGHT No. 10145 Exp.09/30/09 ELECTRICAL

Caltrans Metric

04/03/09

PB Americas, Inc.
303 Second St., Suite 700E
San Francisco, CA 94107-1517

SILVERMAN & LIGHT
1201 PARK AVENUE - SUITE 100
EMERYVILLE, CA 94608-3632

The State of California or its officers or agents shall not be responsible for the accuracy or completeness of electronic copies of this plan sheet.

Caltrans now has a web site! To get to the web site, go to http://www.dot.ca.gov

(E) YBI SUBSTATION

(E) CONTROLLER OE (5)(9)

(E) PNL-UP (2)

FO cable (10) — CKTs #21

(E) MH-3 — (E) MH-2

CKTs #21

(E) VAULT-2B

CKTs #21

CKTs #21

(E) TB-20W

(1)

(E) VAULT-2A

FO cable

(3) CCTV Composite Cable (Typical)

SSD-YBI 1
WD1 51+00
UD

SSD-YBI 4
WD1 51+00
LD

RS2 | ENCODER | ENCODER

TERMINAL STRIP

COMMUNICATION BOX #1

FDU | POWER SUPPLY

FIBER BOX #1 (6)

CKTs #21

FO cable (10)

(3) CCTV Composite Cable (Typical)

SSD-YBI 2
WD1 52+70
UD

SSD-YBI 5
WD1 52+70
LD

RS2 | ENCODER | ENCODER

TERMINAL STRIP

COMMUNICATION BOX #2

FDU | POWER SUPPLY

FIBER BOX #2 (6)

CKTs #21

FO cable (10)

(3) CCTV Composite Cable (Typical)

SSD-YBI 3
WD1 53+84
UD

SSD-YBI 6
WD1 53+84
LD

RS2 | ENCODER | ENCODER

TERMINAL STRIP

COMMUNICATION BOX #3

FDU | POWER SUPPLY

FIBER BOX #3 (6)

CKTs #21

FO cable (10)

(8) FIBER BOX #4

(4)

(E) CABINET (1)

Existing Pier E1

FO cable (10)

WD1 51+45

(7)

(E) fiber to AT&T

(E) Type 6 traffic pull box (at bent 48)

NOTE:

1. Contractor shall add fiber connectors to fiber and test fiber cable. Provide test result of test with new connectors. CT will make connectioon to equipment.

SHEET NOTES:

(1) Furnish and install new NEMA-4X, 610L x 610W x 254D pull box. secure pull box to concrete wall of vault 2A with bolts and channel strut. Provide 4 meter of cable slack inside the box.

(2) Provide 7.6 M of FO cable slack and coil above the (E) cabinet. (1)

(3) Install Caltrans provided cables from comm. box to CCTV.

(4) Existing cabinet (1) mounted on the structure. Verify in field exact location.

(5) Furnish and install 2 RU rack mount FDU assymbly:
(3) Fiber Jumpers, SC-SC/UPC MM, 2 meter (2)(1)
(6) SC-SC duplex adapters, black
(1) 6 position plate
(12) SC/UPC fiber pigtail
(1) 12 fiber splice tray

(6) Furnish and install wallmount FDU assymbly:
(3) Fiber Jumpers, SC-SC/UPC MM, 2 meter
(2) SC-SC duplex adapters, black and
(2) SC/SC duplex adapter, blue
(1) 6 position plate
(4) SC/UPC fiber pigtail
(1)12 fiber splice tray

(7) Furnish and install Coyote RunT splice closure with (2) 12 fiber splicing trays.

(8) Furnish and install wallmount FDU assymbly:
(3) Fiber Jumpers, SC-SC/upc MM, 2 meter
(3) SC-SC duplex adapters, black
(1) 6 position plate
(4) SC/UPC fiber pigtail
(1) 12 fiber splice tray

(9) Furnish and install (4) Duplex SC MM module, See Specs for more information. (1)

(10) Furnish and install 12 fiber multimode 62.5/125 indoor/outdoor cable.

CCTV SYSTEM COMMUNICATIONS
SSD CAMERAS (1)
BLOCK DIAGRAM

E-10

STATE OF CALIFORNIA - DEPARTMENT OF TRANSPORTATION
Caltrans
DESIGN OVERSIGHT
CALCULATED/DESIGNED BY
CHECKED BY
DRAWN BY
REVISED BY
DATE REVISED
DATE
BJ
CL

THIS PLAN ACCURATE FOR ELECTRICAL WORK ONLY

FOR REDUCED PLANS ORIGINAL SCALE IS IN MILLIMETERS 0 20 40 60 80

DGN FILE =>BASE_E10.mer
USERNAME =>blind

CU 04251

FA 0120R3

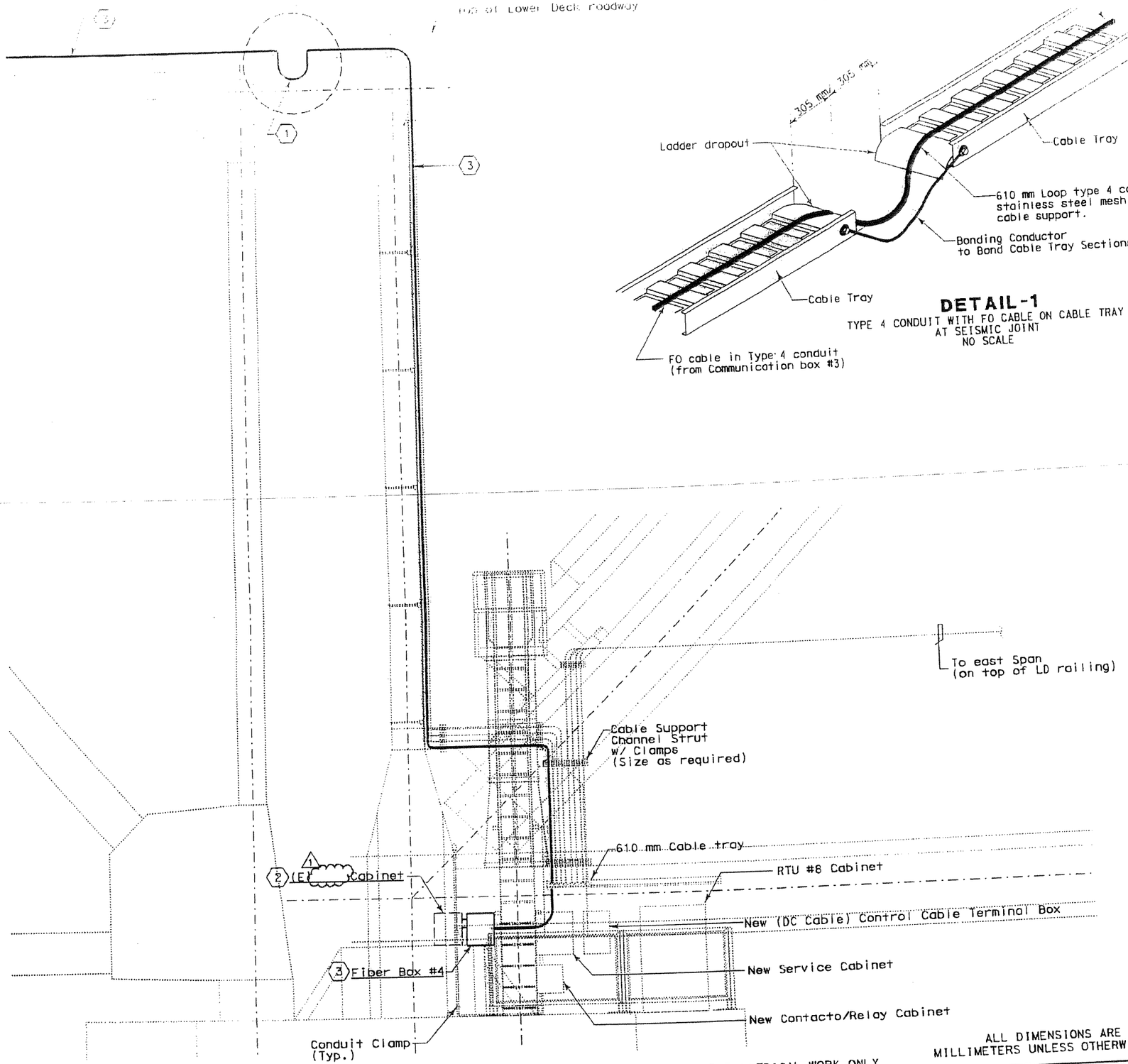

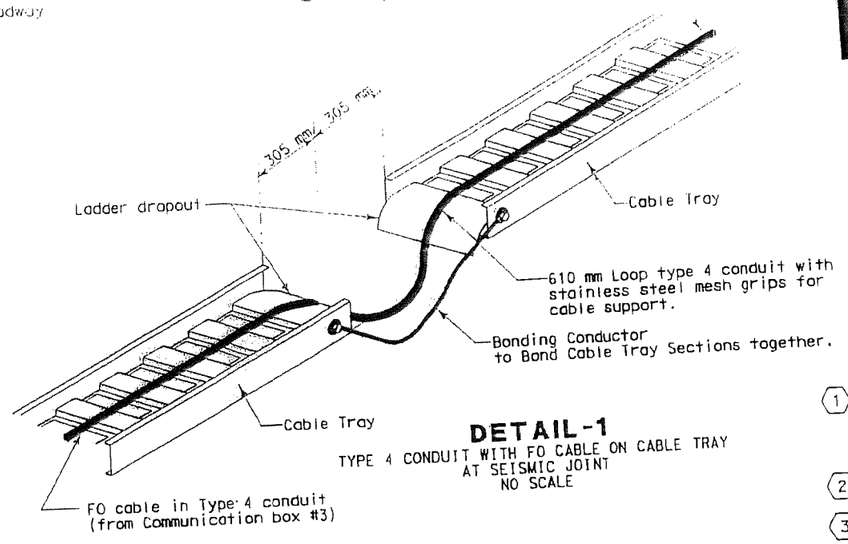

DETAIL-1
TYPE 4 CONDUIT WITH FO CABLE ON CABLE TRAY AT SEISMIC JOINT
NO SCALE

SHEET NOTES

1. Route 41C (Type 4) conduit with FO cable and armored cable with (2#6 + 1#8G) from communication box #3 to existing (E1) cabinet. Secure conduit on cable tray with stainless steel conduit clamps.
2. Verify in field exact location prior to installation.
3. Furnish and install new fiberglass enclosure NEMA-4X with 610W x 610L x 203D min. dimension adjacent to existing BASE cabinet. Provide two (2) 41 mm type 4 conduit between boxes and provide 4 meters of FO cable slack and coil it inside fiber box for Caltrans final termination.

Caltrans Metric

PB Americas, Inc.
303 Second St., Suite 700N
San Francisco, CA 94107-1317

CAROL LIGHT No. 10145 Exp. 09/30/09 ELECTRICAL
04/09/09

SILVERMAN & LIGHT
1201 PARK AVENUE - SUITE 100
EMERYVILLE, CA 94608-3632

The State of California or its officers or agents shall not be responsible for the accuracy or completeness of electronic copies of this plan sheet.

Caltrans now has a web site! To get to the web site, go to http://www.dot.ca.gov

CAROL LIGHT No. 10145 Exp. 09/30/09 ELECTRICAL

MARK	DATE	DESCRIPTIONS REVISIONS	REVI	CK
1	06/09/09	SSD CAMERA SYSTEM	BJ	CL

CONTRACT CHANGE ORDER NO. 203
SHEET 19 OF 22

DETAILS
PIER E1 ELEVATION-ELECTRICAL
SSD CAMERAS 1

SCALE: 1:30

E-11

CALCULATED/ DESIGNED BY	DATE	REVISED BY
CHECKED BY	CL	DATE REVISED

STATE OF CALIFORNIA - DEPARTMENT OF TRANSPORTATION
DESIGN OVERSIGHT
Gibbons

ALL DIMENSIONS ARE IN MILLIMETERS UNLESS OTHERWISE SHOWN

THIS PLAN ACCURATE FOR ELECTRICAL WORK ONLY

FOR REDUCED PLANS ORIGINAL SCALE IS IN MILLIMETERS 0 20 40 60 80

DGN FILE =>BASE_E11.mer
USERNAME =>bjud

CU 04251 EA 0120R3

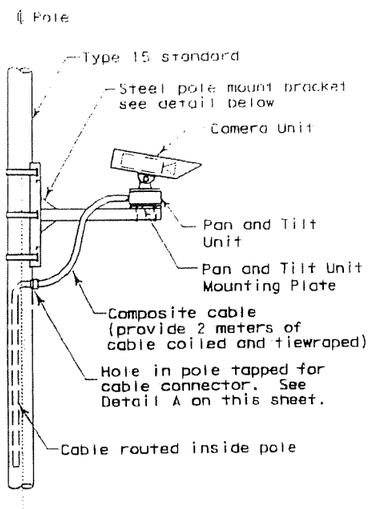

CCTV MOUNTING DETAIL

NOTE:
TVCP Connector for Pan and Tilt Unit shall be positioned away and perpendicular to traffic.

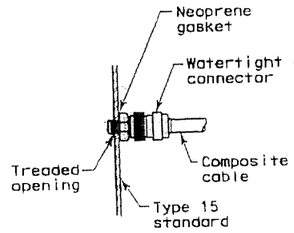

DETAIL-A

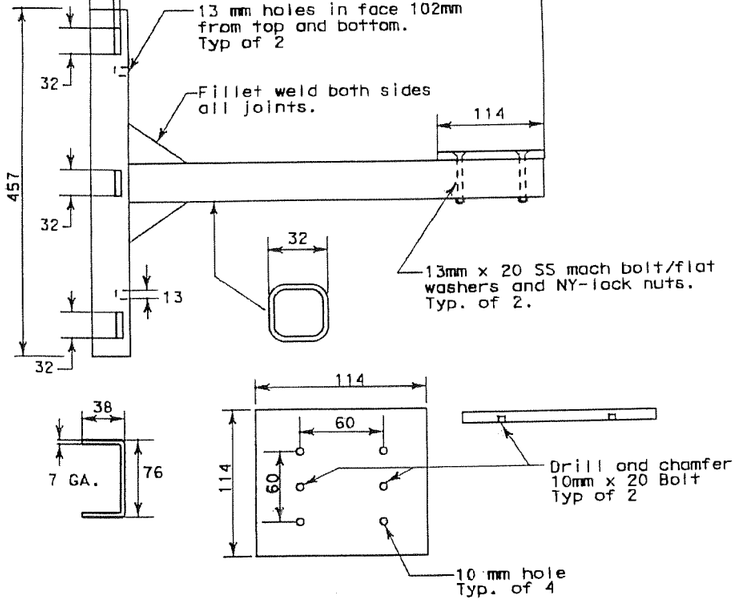

STEEL POLE MOUNT BRACKET DETAIL

(QUANTITY=6) SCALE: NONE

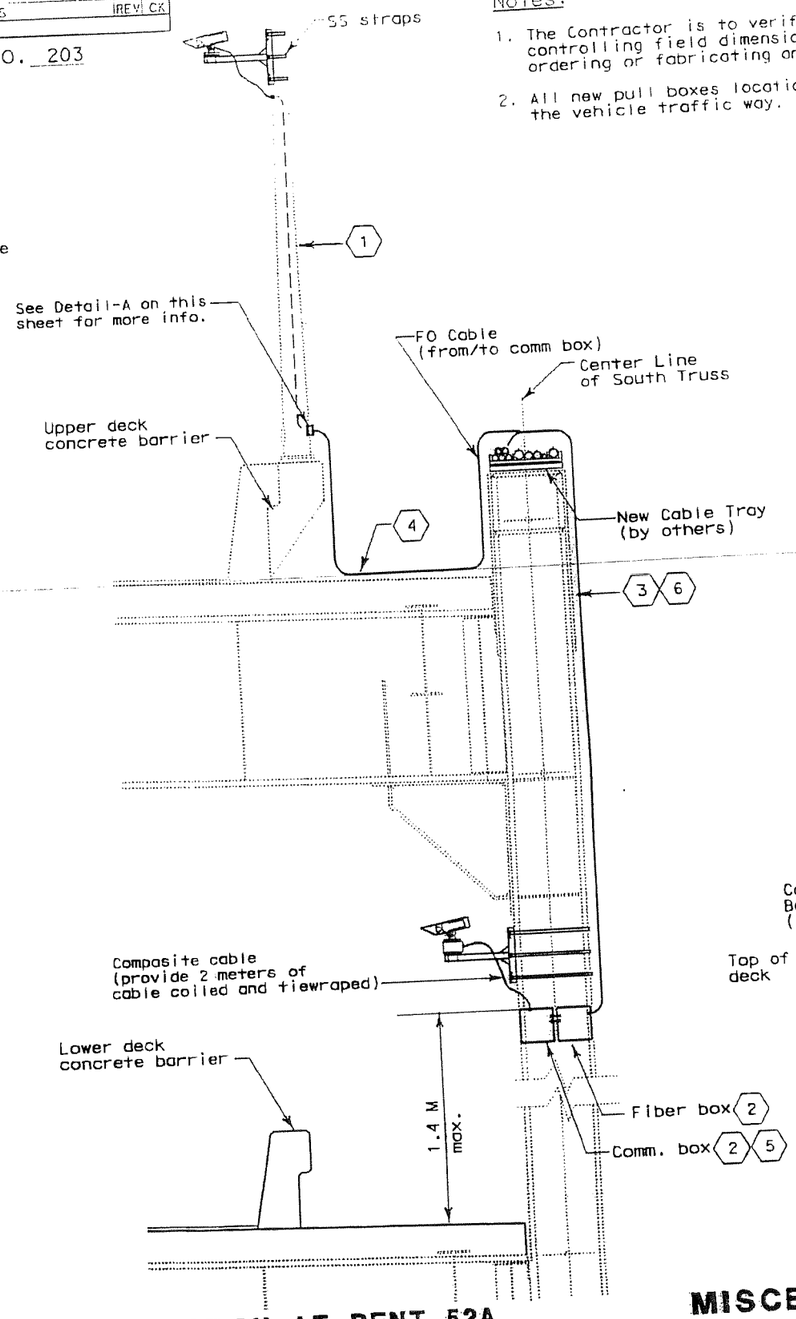

SECTION AT BENT 52A

SCALE: NONE

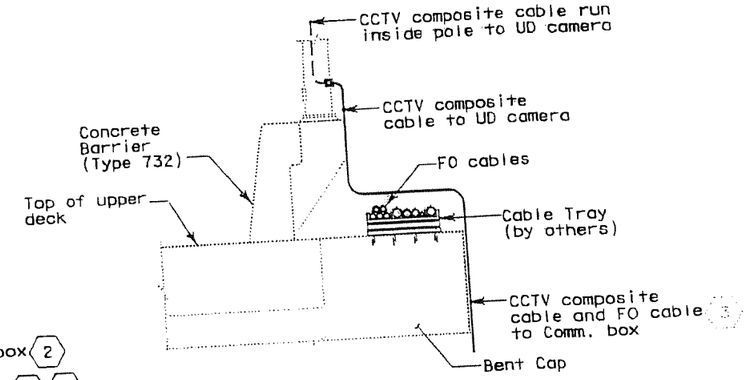

SECTION AT BENT 44A

SCALE: NONE

Notes:

1. The Contractor is to verify all controlling field dimensions before ordering or fabricating any material.
2. All new pull boxes location shall avoid the vehicle traffic way.

SHEET NOTES:

1. Route CCTV composite cable inside pole from camera to NEMA 4X Communication box.
2. Furnish and install Fiberglass enclosure NEMA 4X, with 610 X 610 X 203 min dimension. Secure box vertical steel truss with unistrut and beam clamps. Submit mounting detail to engineer for approval.
3. Route composite cables, Type 4 conduit with FO cable from upper deck to Comm. box at lower deck. Secure cables to vertical steel truss with beam clams.
4. Secure cables on the upper deck with SS cable straps and unistruts.
5. Provide 4 meters of FO cable length and coiled inside box. Caltrans will do final termination at Communication box. 1
6. Route armored cable with (2#6 +1#8G) from cable tray at UD to Fiber box. box at lower deck. Secure cables to vertical steel truss with beam clams.

CAROL LIGHT No. 10145 EXP. 09/30/09 ELECTRICAL — STATE OF CALIFORNIA

MARK	DATE	REVISIONS	BJ	CL
1	06/09/09	ISSD CAMERA SYSTEM	BJ	CL

CONTRACT CHANGE ORDER NO. 203
SHEET 20 OF 22

Caltrans Metric

Carol Light 04/09/09
REGISTERED PROFESSIONAL ENGINEER — DATE
PLANS APPROVAL DATE

PB Americas, Inc.
303 Second St., Suite 700N
San Francisco, CA 94107-1317

SILVERMAN & LIGHT
1201PARK AVENUE - SUITE 100
EMERYVILLE, CA 94608-3632

The State of California or its officers or agents shall not be responsible for the accuracy or completeness of electronic copies of this plan sheet.

Caltrans now has a web site! To get to this web site, go to http://www.dot.ca.gov/

DESIGN OVERSIGHT	CALCULATED/ DESIGNED BY	CHECKED BY	DATE	REVISED BY	DATE REVISED
			BJ	CL	

STATE OF CALIFORNIA - DEPARTMENT OF TRANSPORTATION
Caltrans

THIS PLAN ACCURATE FOR ELECTRICAL WORK ONLY
ALL DIMENSIONS ARE IN MILLIMETERS UNLESS OTHERWISE SHOWN
FOR REDUCED PLANS ORIGINAL 0 20 40 60 80
DGN FILE =>BASE_E12.mer
USERNAME =>bjud

MISCELLANEOUS ELECTRICAL DETAILS
CCTV MOUNTING DETAILS
SCALE AS NOTED

CU 04251 | EA 0120R3 | E-12

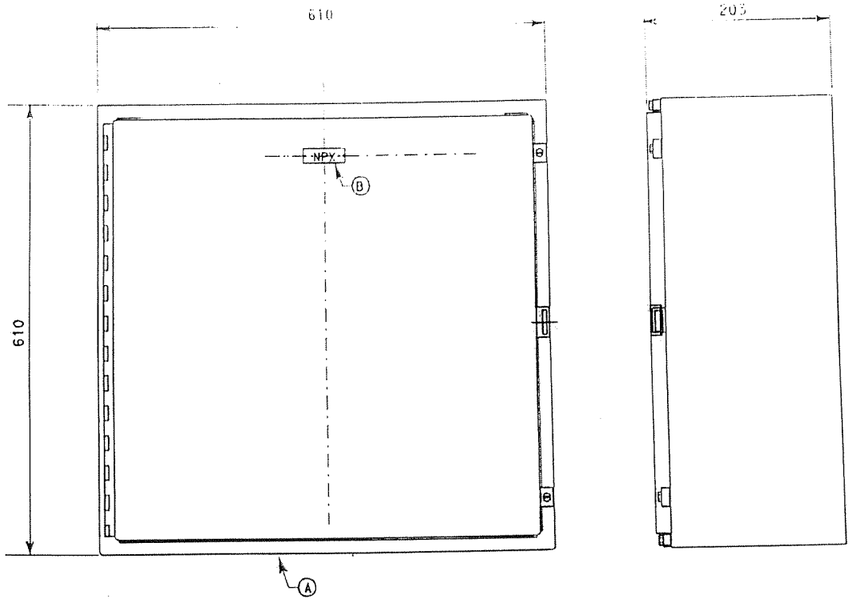

COMMUNICATION BOX / FIBER ENCLOSURE

Type 4X

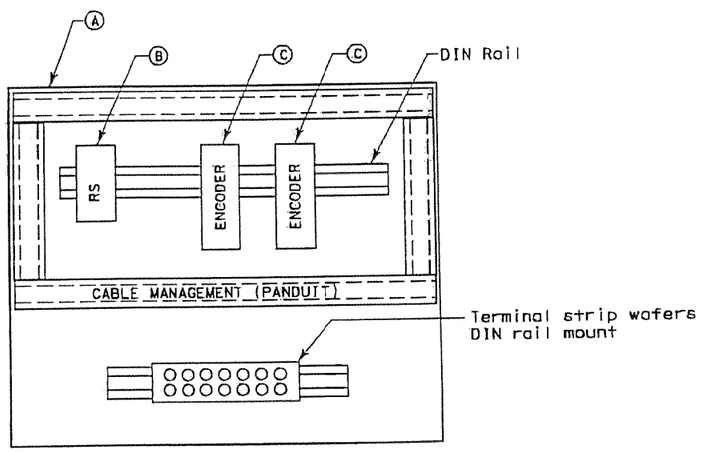

INSIDE COMM. PANEL LAYOUT

BLOCK DIAGRAM

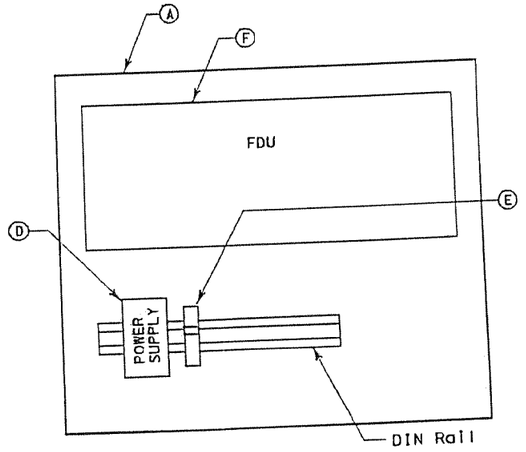

INSIDE FIBER PANEL LAYOUT

BLOCK DIAGRAM

MARK	DATE	DESCRIPTIONS	BY	CK
1	06/09/09	3SD CAMERA SYSTEM	BJ	IRV

REVISIONS

CONTRACT CHANGE ORDER NO. 203
SHEET 21 OF 22

CAROL LIGHT
No. 10145
Exp. 09/30/09
ELECTRICAL
STATE OF CALIFORNIA

Caltrans Metric

04/09/09
REGISTERED ELECTRICAL ENGINEER — DATE

PLANS APPROVED DATE

PB Americas, Inc.
303 Second St., Suite 700N
San Francisco, CA 94107-1317

SILVERMAN & LIGHT
1201 PARK AVENUE - SUITE 100
EMERYVILLE, CA 94608-3632

The State of California or its officers or agents shall not be responsible for the accuracy or completeness of electronic copies of this plan sheet.

Caltrans now has a web site! To get to the web site, go to http://www.dot.ca.gov

MATERIAL LIST

ITEM	DESCRIPTION
A	Enclosure, Fiberglass, NEMA type 4X, with interior panel. See Plans for location.
B	Rail Switch, (2) port 100M FX, (6) 10/100 TX RJ45 ethernet ports, multimode fiber.
C	Video encoder, see specs for more information
D	Rail power supply, see specs for more information.
E	15A-1P CB/120 V, DIN rail mount.
F	Wallmount Fiber Distribution Unit. See Sheet E-10 for more information.

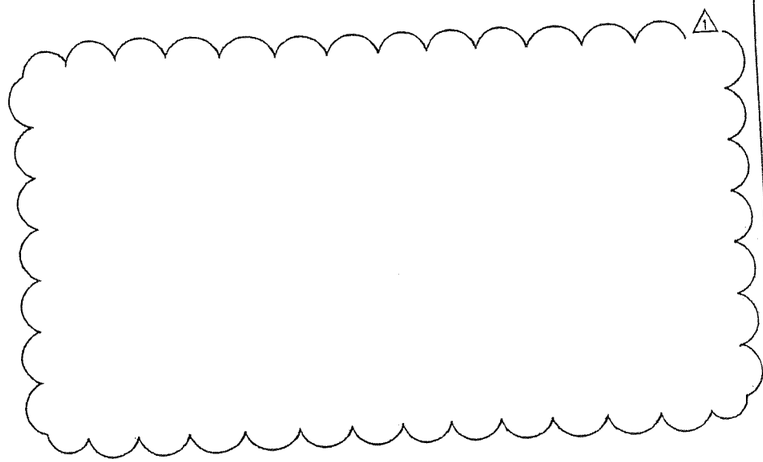

MISCELLANEOUS ELECTRICAL DETAILS

JUNCTION BOX

NO SCALE

E-13

DATE	REVISED BY	DATE REVISED
BJ	CL	

CALCULATED/DESIGNED BY
CHECKED BY

STATE OF CALIFORNIA - DEPARTMENT OF TRANSPORTATION
DESIGN OVERSIGHT

THIS PLAN ACCURATE FOR ELECTRICAL WORK ONLY

0 20 40 60 80

DGN FILE =>BASE_E13.mer
USERNAME =>bjud

CU 04251

EA 0120R3

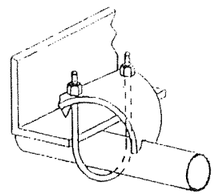

Conduit at right angles to the beam

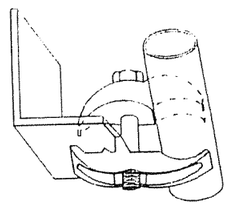

Conduit parallel to the beam

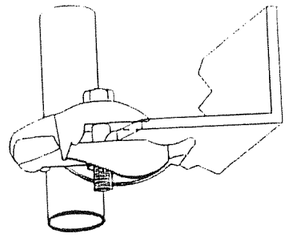

For mounting pipe or conduit vertically across beam edge

CONDUIT MOUNTING DETAILS

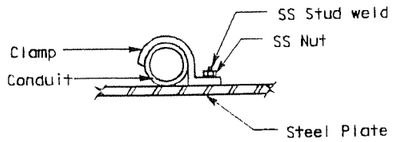

CONDUIT/CABLE MOUNTING DETAIL

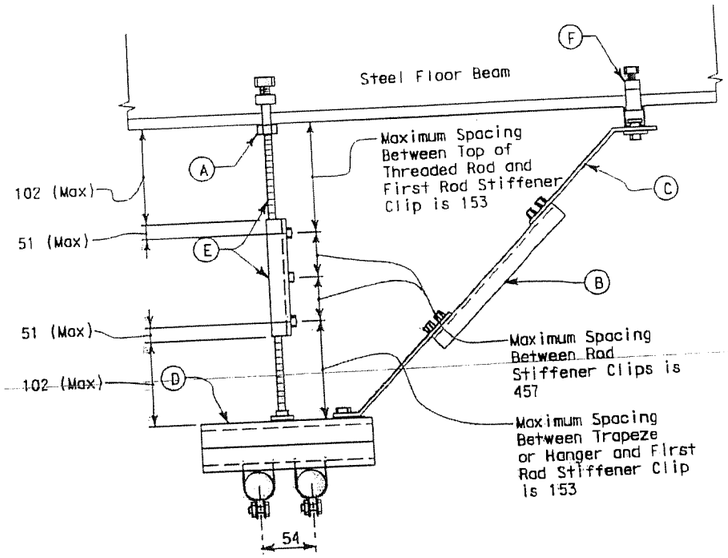

TYPICAL DETAIL
ARMORED CABLE MOUNTING DETAIL
BELOW LOWER DECK
NO SCALE

MATERIAL LIST	
Item No.	Description
A	Beam C-Clamp with Locknut and Set Screw
B	Strut transverse brace for seismic support
C	Hinged seismic bracket with retaining clip
D	Strut channel, 41 mm x 82 mm
E	Threaded rod (13 mm) with stiffener & stiffener clips
F	C-Clamp with Locknut .

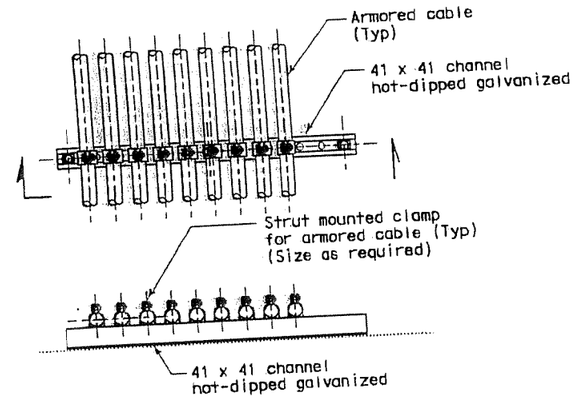

SECTION

TYPICAL DETAIL
ARMORED CABLE MOUNTING DETAIL
NO SCALE

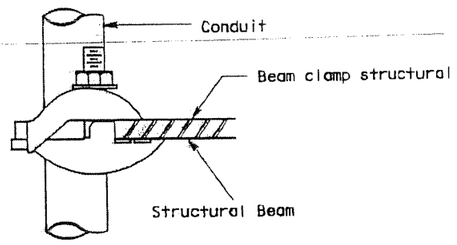

TYPICAL CONDUIT CLAMP MOUNTING

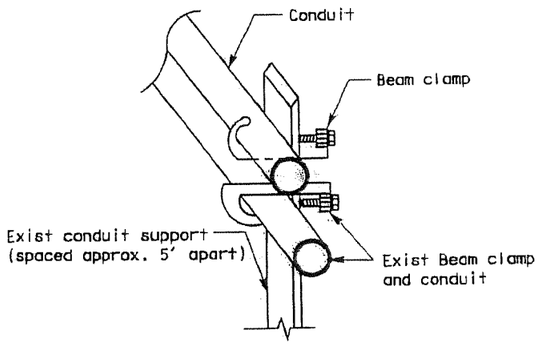

TYPICAL CONDUIT MOUNTING ON METAL STICK

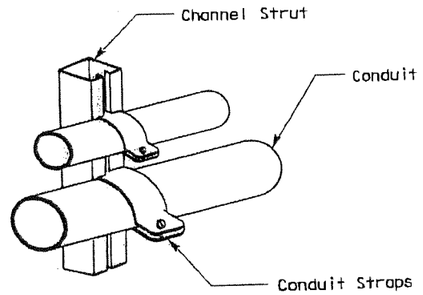

TYPICAL CONDUIT MOUNTING ON STRUT

CONTRACT NO. 04-0120R4

CONTRACT CHANGE ORDER NO 203

SHEET 22 -- 22

MISCELLANEOUS ELECTRICAL DETAILS
TYPICAL CONDUIT/CABLE SUPPORTS
NO SCALE

E-1

Caltrans Metric

04/09/09

CAROL LIGHT
No. 10145
EXP. 09/30/09
ELECTRICAL

PB Americas, Inc.
303 Second St., Suite 700N
San Francisco, CA 94107-1317

SILVERMAN & LIGHT
1201 PARK AVENUE SUITE 100
EMERYVILLE, CA 94608-3632

The State of California or its officers or agents shall not be responsible for the accuracy or completeness of electronic copies of this plan sheet.

Caltrans now has a web site! To get to this web site, go to http://www.dot.ca.gov

DESIGN OVERSIGHT

STATE OF CALIFORNIA - DEPARTMENT OF TRANSPORTATION

CALCULATED/ DESIGNED BY	DATE	REVISED BY	DATE REVISED
CHECKED BY	BJ	CL	

THIS PLAN ACCURATE FOR ELECTRICAL WORK ONLY

FOR REDUCED PLANS ORIGINAL SCALE IS IN MILLIMETERS 0 20 40 60 80

DGN FILE => BASE_E14.mer
USERNAME => bjud

CU 04251

EA 0120R3

STATE OF CALIFORNIA - DEPARTMENT OF TRANSPORTATION

CONTRACT CHANGE ORDER MEMORANDUM

DATE: 8/12/2009 Page 1 of 1

TO: MIKE FORNER / DEANNA VILCHECK

FROM: BILL CASEY

FILE: E.A. 04 - 0120R4
CO-RTE-PM SF-80-12.6/13.2
FED. NO. ACBRIM-080-1(097)N

CCO#: **203** | SUPPLEMENT#: **0** | Category Code: **CLPV**

CONTINGENCY BALANCE (incl. this change) **$17,668,667.59**

COST: **$196,883.90** INCREASE ☑ DECREASE ☐

HEADQUARTERS APPROVAL REQUIRED? ☐ YES ☑ NO

SUPPLEMENTAL FUNDS PROVIDED: **$0.00**

IS THIS REQUEST IN ACCORDANCE WITH ENVIRONMENTAL DOCUMENTS? ☑ YES ☐ NO

CCO DESCRIPTION:
SSD Security Cameras

PROJECT DESCRIPTION:
CONSTRUCT ROUTE 80 TEMP BYPASS STRUCTURE

Original Contract Time:	Time Adj. This Change:	Previously Approved CCO Time Adjustments:	Percentage Time Adjusted: (including this change)	Total # of Unreconciled Deferred Time CCO(s): (including this change)
475 Day(s)	**0** Day(s)	**1195** Day(s)	**252** %	**7**

THIS CHANGE ORDER PROVIDES FOR:

Furnish and install a camera security system for the Yerba Buena Island Detour (YBID) structure.

The YBID was awarded in March 2004 to construct a detour that will allow for the tie in of the new east span of the San Francisco Oakland Bay Bridge to Yerba Buena Island. The YBID encompasses three main structures, the East Tie-In to the existing bridge, the West Tie-In (WTI) to Yerba Buena Island, and the Viaduct structure between the two tie ins.

Two separate Department strategy memorandums, dated December 14, 2006 and December 25, 2006, approved by Tony Anziano - Toll Bridge Program Manager and Richard Land - Chief Engineer, recommended that the Department assume responsibility for the designs of the East Tie-In (ETI) and West Tie-In (WTI) portions of this contract, and incorporated seismic retrofit work of the permanent Yerba Buena Island Transition Structure (YBITS) onto this project. The approval of these strategy memorandums extended the project completion date approximately 5 years.

This change order is necessary to maintain the security of the YBID structure in conformance with the State's Homeland Security requirements.

Compensation for this work shall be paid for as extra work at an agreed lump sum price of $196,883.90, which shall be financed from the contract's contingency funds. A cost analysis is on file.

No adjustment of contract time is warranted as the work will not affect the controlling operation.

This change was concurred with by Alec Melkonians - Asst. Project Manager, Hong Wong - Project Engineer, and Lina Ellis - Maintenance.

Maintenance concurrence is not required as this change does not affect any permanent roadway features.

CONCURRED BY:

Construction Engineer:	Jeannie Balderramos JB	Date 8-14-09
Bridge Engineer:		Date
Project Engineer:	Hong Wong, PE	Date 7/20/09
Project Manager:	Alec Melkonians	Date 7/20/09
FHWA Rep.:		Date
Environmental:		Date
Other (specify):	Lina Ellis, Maintenance	Date
Other (specify):		Date
District Prior Approval By:		Date
HQ (Issue Approve) By:		Date
Resident Engineer's Signature:		Date 9-13-09

ESTIMATE OF COST

	THIS REQUEST	TOTAL TO DATE
ITEMS	$0.00	$0.00
FORCE ACCOUNT	$0.00	$0.00
AGREED PRICE	$196,883.90	$196,883.90
ADJUSTMENT	$0.00	$0.00
TOTAL	$196,883.90	$196,883.90

FEDERAL PARTICIPATION

☐ PARTICIPATING ☐ PARTICIPATING IN PART ☑ NONE
☐ NON-PARTICIPATING (MAINTENANCE) ☐ NON-PARTICIPATING

FEDERAL SEGREGATION (if more than one Funding Source or P.I.P. type)
☐ CCO FUNDED PER CONTRACT ☐ CCO FUNDED AS FOLLOWS

FEDERAL FUNDING SOURCE PERCENT

ADA Notice: For individuals with sensory disabilities, this document is available in alternate formats. For information call: (916) 654-6410 or TDD (916) 654-3880 or write Records and Forms Management, 1120 N Street, MS-89, Sacramento, CA 95814.

STATE OF CALIFORNIA - DEPARTMENT OF TRANSPORTATION

CONTRACT CHANGE ORDER

Change Requested by: Engineer

CCO: 204	Suppl. No. 1	Contract No. 04 - 0120R4	Road SF-80-12.6/13.2	FED. AID LOC.:

To: CC MYERS INC

You are directed to make the following changes from the plans and specifications or do the following described work not included in the plans and specifications for this contract. ***NOTE: This change order is not effective until approved by the Engineer.***

Description of work to be done, estimate of quantities and prices to be paid. (Segregate between additional work at contract price, agreed price and force account.) Unless otherwise stated, rates for rental of equipment cover only such time as equipment is actually used and no allowance will be made for idle time. This last percentage shown is the net accumulated increase or decrease from the original quantity in the Engineer's Estimate.

Extra Work at Force Account:

Provide additional funds for scope of work as approved on the original Change Order #204.

Estimated cost of Extra Work at Force Account $2,500,000.00

A determination of the delay in completion of the contract due to the work specified by Contract Change Order No. 204 has been made in accordance with the provisions of Section 8-1.07, "Liquidated Damages," of the Standard Specifications. There will be no adjustment of time as a result of the original Change Order No. 204 and this supplement.

RECEIVED
2010 JUN 23 AM 11:52

Estimated Cost: Increase ☑ Decrease ☐ **$2,500,000.00**

By reason of this order the time of completion will be adjusted as follows: 0 days

Submitted by

Signature	Resident Engineer	Date
Deanna Vilcheck	for JEANNIE BALDERRAMOS	4/9/10

Approval Recommended by

Signature	Area Construction Manager	Date
Deanna Vilcheck	DEANNA VILCHECK	4/9/10

Engineer Approved by

Signature	SFOBB Construction Manager	Date
Peter E. Siegenthaler	MIKE FORNER	4/14/10

We the undersigned contractor, have given careful consideration to the change proposed and agree, if this proposal is approved, that we will provide all equipment, furnish the materials, except as may otherwise be noted above, and perform all services necessary for the work above specified, and will accept as full payment therefor the prices shown above.

NOTE: If you, the contractor, do not sign acceptance of this order, your attention is directed to the requirements of the specifications as to proceeding with the ordered work and filing a written protest within the time therein specified.

Contractor Acceptance by

Signature	(Print name and title)	Date
C Clifford	C.S. Clifford, CFO	4.19.10

STATE OF CALIFORNIA - DEPARTMENT OF TRANSPORTATION

CONTRACT CHANGE ORDER MEMORANDUM

TO: MIKE FORNER / DEANNA VILCHECK	FILE: E.A. 04 - 0120R4
	CO-RTE-PM SF-80-12.6/13.2
FROM: JEANNIE BALDERRAMOS	FED. NO.
CCO#: 204 SUPPLEMENT#: 1 Category Code: CHPT	CONTINGENCY BALANCE (incl. this change) $38,401,164.59
COST: $2,500,000.00 INCREASE ☑ DECREASE ☐	HEADQUARTERS APPROVAL REQUIRED? ☑ YES ☐ NO
SUPPLEMENTAL FUNDS PROVIDED: $0.00	IS THIS REQUEST IN ACCORDANCE WITH ENVIRONMENTAL DOCUMENTS? ☑ YES ☐ NO
CCO DESCRIPTION: Labor Day Weekend Support Costs	PROJECT DESCRIPTION: CONSTRUCT ROUTE 80 TEMP BYPASS STRUCTURE

Original Contract Time:	Time Adj. This Change:	Previously Approved CCO Time Adjustments:	Percentage Time Adjusted: (including this change)	Total # of Unreconciled Deferred Time CCO(s): (including this change)
475 Day(s)	0 Day(s)	1660 Day(s)	349 %	0

THIS CHANGE ORDER PROVIDES FOR:

Additional funding for support costs pertaining to the traffic switch to the YBI Detour during the 2009 Labor Day Weekend closure of the San Francisco Oakland Bay Bridge (SFOBB).

This contract calls for the construction of a temporary detour for both eastbound and westbound I-80 traffic that allows for the tie in of the east span of the new San Francisco Oakland Bay Bridge (SFOBB) to Yerba Buena Island. The detour consist of three main structures, the east tie in (ETI) to the bridge, the west tie in (WTI) to the island and the viaduct structure between the two tie ins.

The original contract was awarded as a performance based contract with the contractor responsible for the design of the structures based upon meeting specified design criteria. The Department issued a December 14, 2006 memo entitled Strategy for South-South Detour Contract Completion which was approved by Tony Anziano (Toll Bridge Program Manager), Richard Land (Chief Engineer) and subsequently by the TBPOC. This memo recommended that the design of the ETI structure be assumed by the Department as opposed to the as-bid performance based contractor design.

The Department based design of the ETI structure required the roll out of an existing span of the SFOBB and the roll in of the new ETI span. This roll out / roll in required a full 3 to 4 day closure of the SFOBB. The actual roll out / roll in and traffic switch to the YBI Detour was performed during a full closure of the SFOBB over Labor Day Weekend 2009. The major work that took place over that weekend concerned the roll out of the existing steel truss span and the roll in of the new East Tie In Truss span. Each of these spans are double deck steel trusses approximately 90 meters long, 25 meters wide and weigh approximately 4,000 metric tons.

The original Change Order No. 204 provided compensation for (1) the installation of the expansion joints, bearings and barriers for the ETI truss (2) support costs associated with the roll out / roll in operations and (3) support costs associated with the actual Labor Day Weekend closure of the SFOBB.

The actual costs of the roll out / roll in operation performed during the closure of the SFOBB were consistent with the costs estimated for the original change order. However, the extent of the cost incurred both prior to and after the roll out / roll in operation significantly exceeded the original estimate. Extensive costs were incurred at Pier E1 prior to the closure related to surveying the as-built condition of that structure in order to insure the existing roll out span could be safety and efficiently removed and that the new roll in span would properly fit onto the existing structure. The extent of the coring required at the Pier E1 concrete deck was also more extensive than estimated.

Unanticipated costs were incurred after the detour was put in place due to numerous adjustments associated with the new expansion joints and isolation bearings and improvements made to the concrete deck to improve the profile of the new roadway. The extent of the costs associated with the mobilization and demobilization of the equipment required for the roll out / roll in event also exceeded the original estimate.

Due to these additional costs it is now anticipated that an additional $2,500,000.00 will be required to fund this work. Compensation shall be paid as extra work at force account at an estimated costs $2,500,000.00 which shall be financed from the contract's contingency funds. A cost analysis is on file. This change order was approved by the TBPOC on March

ADA Notice: For individuals with sensory disabilities, this document is available in alternate formats. For information call: (916) 654-6410 or TDD (916) 654-3880 or write Records and Forms Management, 1120 N Street, MS-89, Sacramento, CA 95814.

4, 2010.

A determination of the delay in completion of the contract due to the work specified by Contract Change Order No. 204 has been made in accordance with the provisions of Section 8-1.07, "Liquidated Damages," of the Standard Specifications. There will be no adjustment of time as a result of the original Change Order No. 204 and this supplement.

This change was concurred by Ken Terpstra - Project Manager, Lina Ellis - Maintenance, and Jaime Gutierrez - Project Engineer.

Maintenance concurrence is not required as the skid bent is a temporary structure that doesn't affect any permanent roadway features.

CONCURRED BY:		
Construction Engineer:	Jeannie Balderramos, RE	Date 4-19-10
Bridge Engineer:	Bill Casey, Bridge Engineer	Date 4/19/10
Project Engineer:	Jaime Gutierrez, PE	Date 4/19/10
Project Manager:	Ken Terpstra, PM	Date 4/8/10
FHWA Rep.:		Date
Environmental:	Mohan Ayadurai, Struct. Rep.	Date 3/15/10
Other (specify):	Lina Ellis, Maintenance	Date 3/8/10
Other (specify):	Patrick Treacy, HQ Asst.Const.Co	Date 3/8/10
District Prior Approval By:		Date
HQ (Issue Approve) By:	Larry Salhaney, HQ CCO Engine	Date 4/6/10
Resident Engineer's Signature:	Jeannie Balderramos	Date 4/19/10

ESTIMATE OF COST		
	THIS REQUEST	TOTAL TO DATE
ITEMS	$0.00	$0.00
FORCE ACCOUNT	$2,500,000.00	$6,000,000.00
AGREED PRICE	$0.00	$0.00
ADJUSTMENT	$0.00	$0.00
TOTAL	$2,500,000.00	$6,000,000.00

FEDERAL PARTICIPATION

☐ PARTICIPATING ☐ PARTICIPATING IN PART ☑ NONE
☐ NON-PARTICIPATING (MAINTENANCE) ☐ NON-PARTICIPATING

FEDERAL SEGREGATION (if more than one Funding Source or P.I.P. type)
☐ CCO FUNDED PER CONTRACT ☐ CCO FUNDED AS FOLLOWS

FEDERAL FUNDING SOURCE	PERCENT

ADA Notice: For individuals with sensory disabilities, this document is available in alternate formats. For information call: (916) 654-6410 or TDD (916) 654-3880 or write Records and Forms Management, 1120 N Street, MS-89, Sacramento, CA 95814.

STATE OF CALIFORNIA - DEPARTMENT OF TRANSPORTATION

CONTRACT CHANGE ORDER

Change Requested by: Engineer

CCO 206	Suppl. No. 0	Contract No. 04 - 0120R4	Road SF-80-12.6/13.2	FED. AID LOC.:

To: CC MYERS INC

You are directed to make the following changes from the plans and specifications or do the following described work not included in the plans and specifications for this contract. ***NOTE: This change order is not effective until approved by the Engineer.***

Description of work to be done, estimate of quantities and prices to be paid. (Segregate between additional work at contract price, agreed price and force account.) Unless otherwise stated, rates for rental of equipment cover only such time as equipment is actually used and no allowance will be made for idle time. This last percentage shown is the net accumulated increase or decrease from the original quantity in the Engineer's Estimate.

Extra Work at Lump Sum:

Provide compensation to the Contractor for additional costs associated with the erection of the steel skid bent system of the East Tie-In (ETI) portion of the Temporary Bypass Structure (Bridge No. 34-0006 (TEMP)).

For this work, the Contractor shall be compensated an agreed lump sum of $176,670.00. Except for outstanding costs pertaining to work specified to be performed at force account under previously issued change orders, this lump sum constitutes full and final compensation, including all markups, for all outstanding costs incurred by the Contractor's steel erection subcontractor, Danny's Construction Company, Inc. (DCCI), pertaining to the skid bent system of the ETI structure and the subsequent roll in of the truss into its final alignment.

Compensation provided under this change includes the cost of furnishing all shim plates required for the connection at the top beam of the skid bent towers and the bottom flange of the skid beam.

Compensation for outstanding costs incurred by the Contractor to support DCCI ETI operations, including providing welding inspection for quality control and providing access to the work, are excluded from this change order.

Total Cost of Extra Work at Lump Sum $176,670.00

Estimated Cost: Increase ☑ Decrease ☐ **$176,670.00**

By **reason of this order the time of completion will be adjusted as follows:** 0 days

Submitted by		
Signature	Resident Engineer BILL CASEY	Date 12-16-09
Approval Recommended by		
Signature Deanna Vilcheck	Area Construction Manager DEANNA VILCHECK	Date 12/16/09
Engineer Approval by		
Signature Deanna Vilcheck	Area Construction Manager DEANNA VILCHECK	Date 1/19/10

We the undersigned contractor, have given careful consideration to the change proposed and agree, if this proposal is approved, that we will provide all equipment, furnish the materials, except as may otherwise be noted above, and perform all services necessary for the work above specified, and will accept as full payment therefor the prices shown above.

NOTE: If you, the contractor, do not sign acceptance of this order, your attention is directed to the requirements of the specifications as to proceeding with the ordered work and filing a written protest within the time therein specified.

Contractor Acceptance by		
Signature	(Print name and title) DANIEL E. HUMIC, PRESIDENT	Date 1/11/10

STATE OF CALIFORNIA - DEPARTMENT OF TRANSPORTATION

CONTRACT CHANGE ORDER

Change Requested by: Engineer

CCO 207	Suppl. No. 0	Contract No. 04 - 0120R4	Road SF-80-12.6/13.2	FED. AID LOC.: ACBRIM-080-1(097)N

To: **CC MYERS INC**

You are directed to make the following changes from the plans and specifications or do the following described work not included in the plans and specifications for this contract. ***NOTE: This change order is not effective until approved by the Engineer.***

Description of work to be done, estimate of quantities and prices to be paid. (Segregate between additional work at contract price, agreed price and force account.) Unless otherwise stated, rates for rental of equipment cover only such time as equipment is actually used and no allowance will be made for idle time. This last percentage shown is the net accumulated increase or decrease from the original quantity in the Engineer's Estimate.

Incorporate the changes to the steel truss of the East Tie-In portion of the Temporary Bypass Structure (Bridge No. 34-0006 (TEMP)) as shown in the revised plan sheets of Sheets No. 2 through 9 of this change order.

Extra Work at Force Account:

Provide for the fabrication and delivery to the jobsite of all steel plates, brackets, stiffeners and bolts necessary to incorporate the changes to the steel truss provided for under this change order.

Estimated Cost of Extra Work at Force Account $400,000.00

Costs associated with the installation and erection of all steel plates, brackets, stiffeners and bolts and for performing all modifications to the steel truss necessary to incorporate the changes provided for under this change order are deferred.

Estimated Cost: **Increase** ☑ **Decrease** ☐ **$400,000.00**

By reason of this order the time of completion will be adjusted as follows: Deferred

Submitted by		
Signature	**Resident Engineer** BILL CASEY	**Date** 7-3-09
Approval Recommended by		
Signature Deanna Vilcheck	**Area Construction Manager** DEANNA VILCHECK	**Date** 7/7/09
Engineer Approval by		
Signature Deanna Vilcheck	**Area Construction Manager** DEANNA VILCHECK	**Date** 7/28/09

We the undersigned contractor, have given careful consideration to the change proposed and agree, if this proposal is approved, that we will provide all equipment, furnish the materials, except as may otherwise be noted above, and perform all services necessary for the work above specified, and will accept as full payment therefor the prices shown above.

NOTE: If you, the contractor, do not sign acceptance of this order, your attention is directed to the requirements of the specifications as to proceeding with the ordered work and filing a written protest within the time therein specified.

Contractor Acceptance by		
Signature	**(Print name and title)** DANIEL E. HAMICK, PRESIDENT	**Date** 7/24/09

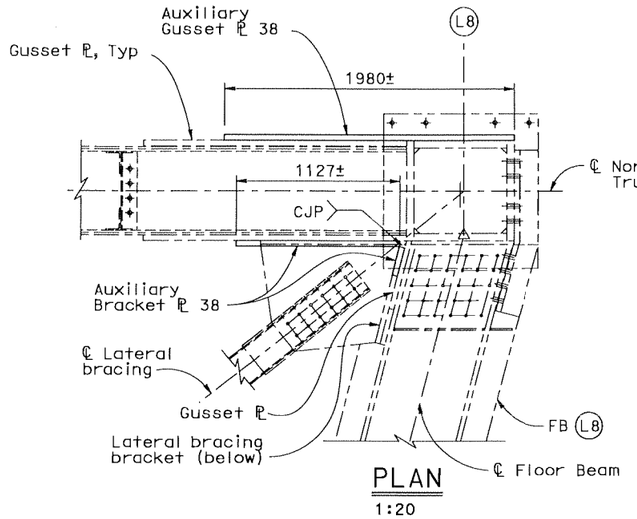

PLAN

1:20

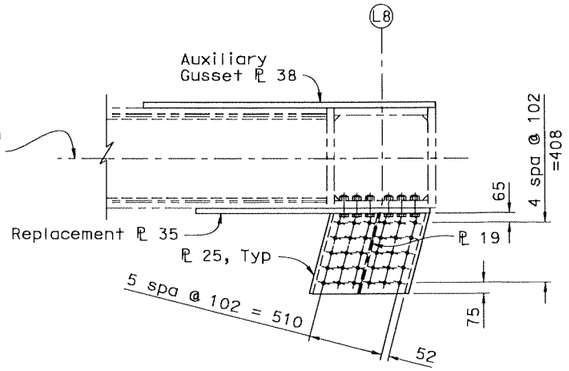

FLOOR BEAM LOWER BRACKET PLAN

1:20

FB not shown for clarity

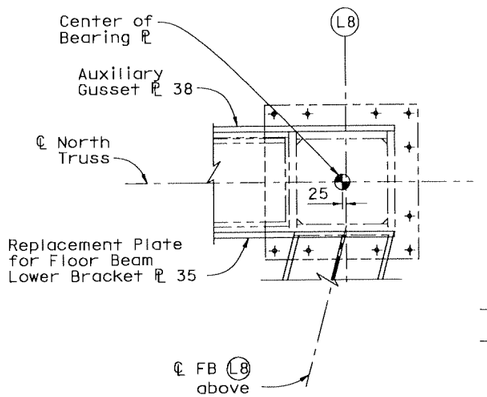

SECTION A-A

1:20

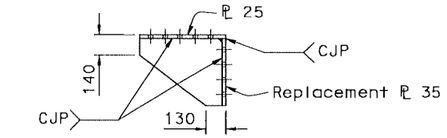

LOWER BRACKET DETAIL

1:20

Legend

+ Replace with longer bolts

+ New bolts 29 Dia

——— Existing structure

——— Auxiliary gusset and bracket plates

Notes:

1. All bolts are A490 with threads excluded from shear plane, unless noted otherwise.
2. All welds are CJP, unless noted otherwise.
3. For details not shown, see "Truss Joint Details No. 10" sheet.

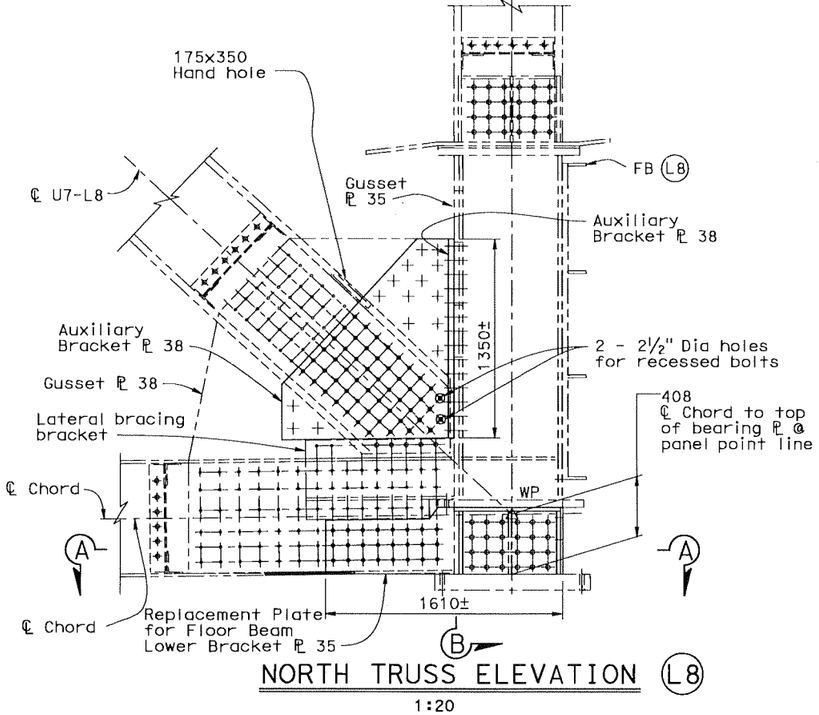

NORTH TRUSS ELEVATION L8

1:20

(Inside Face)

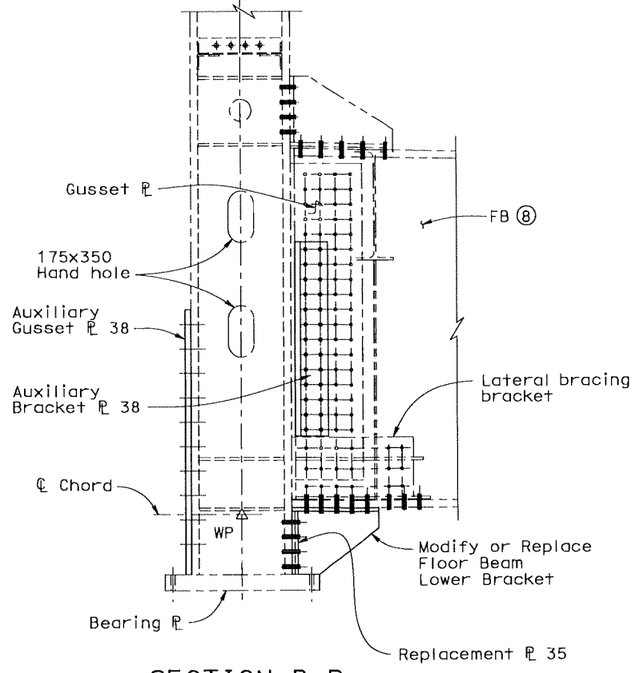

SECTION B-B

1:20

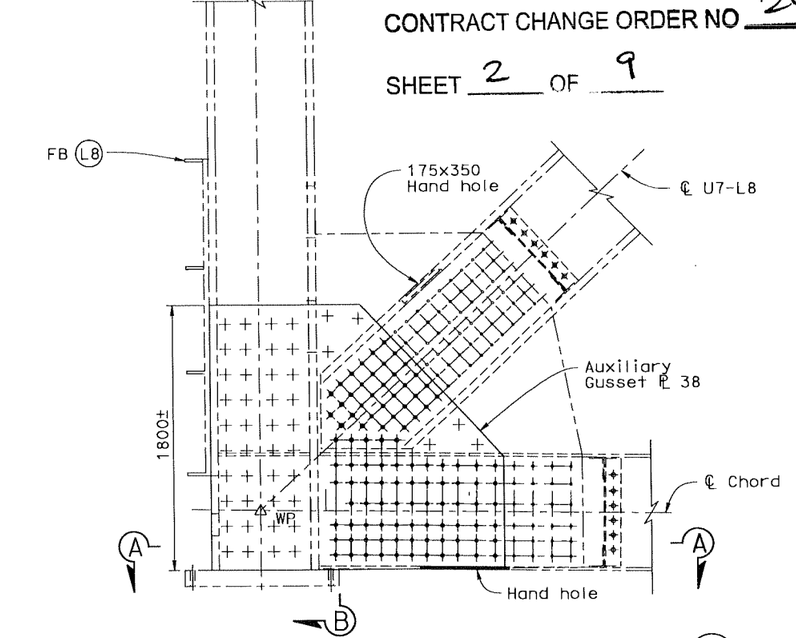

NORTH TRUSS ELEVATION L8

(Outside Face) 1:20

DIST	COUNTY	ROUTE	KILOMETER POST TOTAL PROJECT	SHEET No	TOTAL
04	SF	80	12.6/13.2		

REGISTERED CIVIL ENGINEER

6-03-09

PLANS APPROVAL DATE

REGISTERED PROFESSIONAL ENGINEER — David Griffith — No. C49125 — Exp. 9/30/10 — CIVIL — STATE OF CALIFORNIA

The State of California or its officers or agents shall not be responsible for the accuracy or completeness of electronic copies of this plan sheet.

T.Y. LIN / MOFFATT & NICHOL
Two Harrison Street, Suite 500
San Francisco, CA 94105

CONTRACT NO. 04-0120R4

CONTRACT CHANGE ORDER NO 207

SHEET 2 OF 9

T. Ostrom/M. Whiteside/A. Akinsanya
DESIGN OVERSIGHT

SIGN OFF DATE

	BY	CHECKED
DESIGN	D. Griffith, S. Singh	R. Nutt
DETAILS	P. Zhao	A. Lee
QUANTITIES	H. Nelson	A. Lee

PREPARED FOR THE STATE OF CALIFORNIA DEPARTMENT OF TRANSPORTATION

A.M. Lee
PROJECT ENGINEER
S. Abbas
PROJECT MANAGER

CU
EA 0120R4

BRIDGE NO. 34-0006 (TEMP)
KILOMETER POST 12.6

ALL DIMENSIONS ARE IN MILLIMETERS UNLESS OTHERWISE SHOWN

SAN FRANCISCO OAKLAND BAY BRIDGE
EAST SPAN SEISMIC SAFETY PROJECT

EAST TIE-IN

AUXILIARY GUSSETS AT L8, NORTH

DISREGARD PRINTS BEARING EARLIER REVISION DATES

REVISION DATES (PRELIMINARY STAGE ONLY): 6/03/09

SHEET 57A OF 214

DESIGN DETAIL SHEET (METRIC) (REV. 3/1/98)
●DATE● ●TIME● Pen Table File

ORIGINAL SCALE IN MILLIMETERS FOR REDUCED PLANS 0 10 20 30 40 50 60 70 80 90 100

FILE => p:\bb\04-012001\eti\trussretrofit\aktjd10.dgn

USERNAME => dzhao
DATE PLOTTED => 6/3/2009
TIME PLOTTED => 6:38:37 PM
FILE => p:\bb\04-012001\eti\trussretrofit\aktjd10.dgn

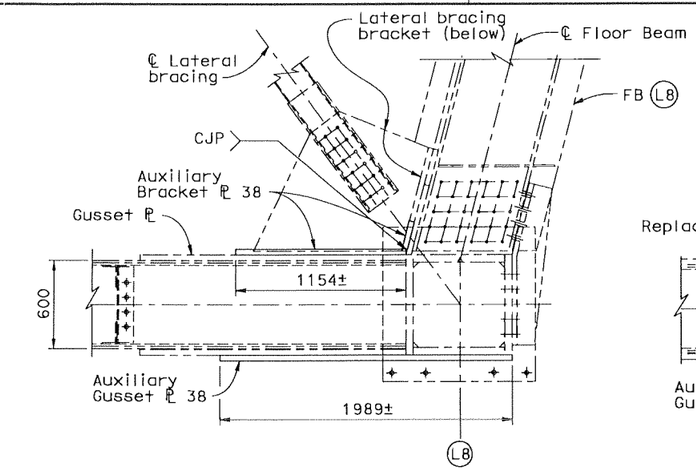

PLAN

1:20

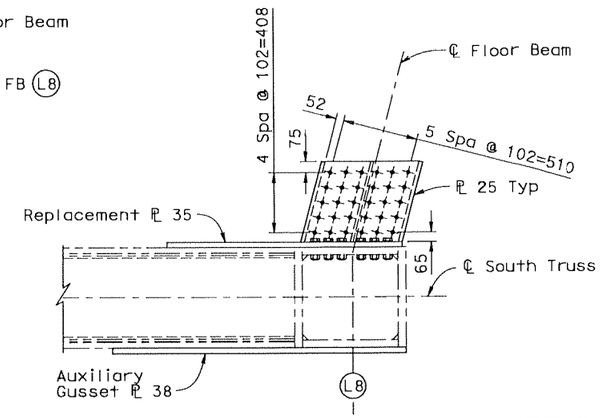

FLOOR BEAM LOWER BRACKET PLAN

1:20

FB not shown for clarity

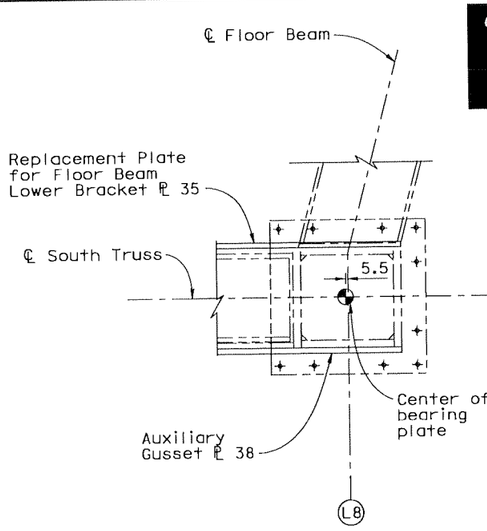

SECTION A-A

1:20

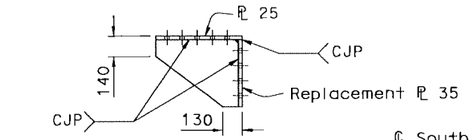

LOWER BRACKET DETAIL

1:20

Legend

- + Replace with longer bolts
- + New bolts 29 Dia
- ———— Existing structure
- ———— Auxiliary gusset and bracket plates

Notes:

1. All bolts are A490 with threads excluded from shear plane, unless noted otherwise.
2. All welds are CJP, unless noted otherwise.
3. For details not shown, see "Truss Joint Details No. 11" sheet.

CONTRACT NO. 04-0120R4

CONTRACT CHANGE ORDER NO 207

SHEET 3 OF 9

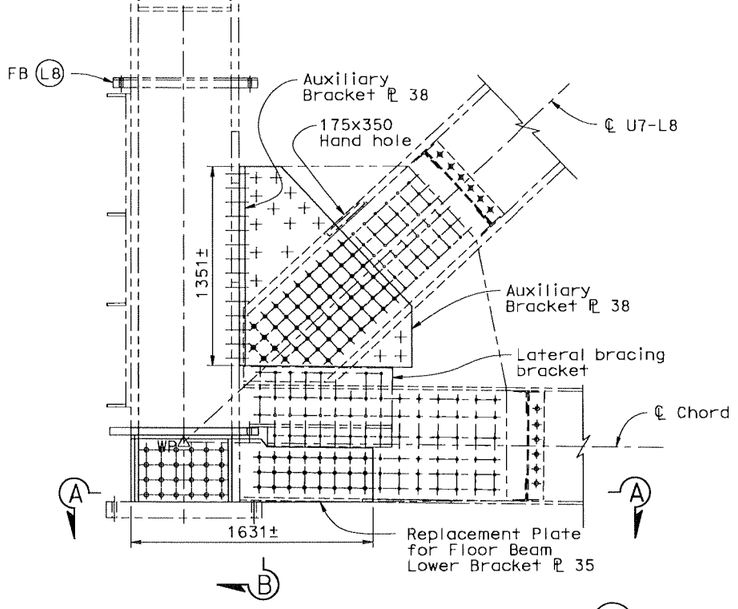

SOUTH TRUSS ELEVATION (L8)

1:20

(Inside Face)

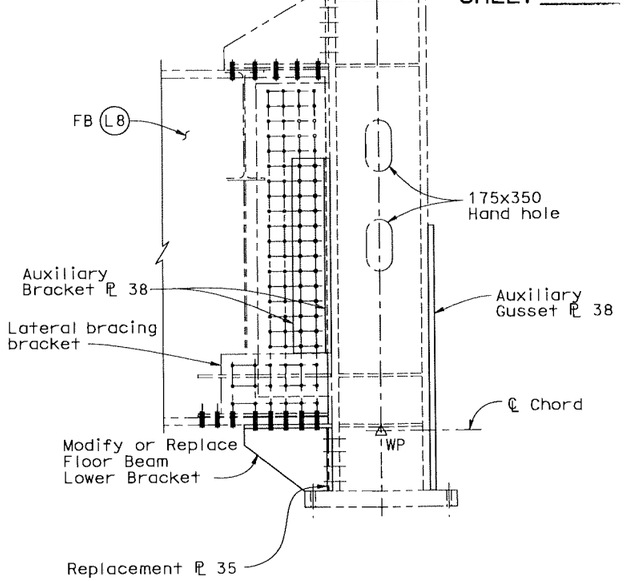

SECTION B-B

1:20

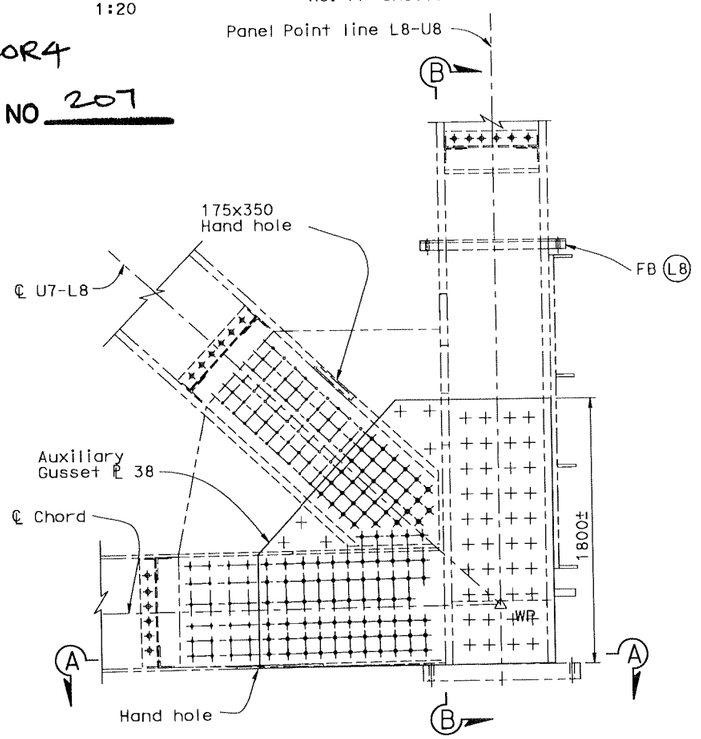

SOUTH TRUSS ELEVATION (L8)

(Outside Face) 1:20

ALL DIMENSIONS ARE IN MILLIMETERS UNLESS OTHERWISE SHOWN

SAN FRANCISCO OAKLAND BAY BRIDGE
EAST SPAN SEISMIC SAFETY PROJECT

EAST TIE-IN

AUXILIARY GUSSETS AT L8, SOUTH

DIST	COUNTY	ROUTE	KILOMETER POST TOTAL PROJECT	SHEET No	TOTAL
04	SF	80	12.6/13.2		

REGISTERED CIVIL ENGINEER

6-03-09
PLANS APPROVAL DATE

REGISTERED PROFESSIONAL ENGINEER — David Griffith — No. C49125 — Exp. 9/30/10 — CIVIL — STATE OF CALIFORNIA

The State of California or its officers or agents shall not be responsible for the accuracy or completeness of electronic copies of this plan sheet.

T.Y. LIN / MOFFATT & NICHOL
Two Harrison Street, Suite 500
San Francisco, CA 94105

	BY	CHECKED
DESIGN	D. Griffith, S. Singh	R. Nutt
DETAILS	P. Zhao	A. Lee
QUANTITIES	H. Nelson	A. Lee

PREPARED FOR THE STATE OF CALIFORNIA
DEPARTMENT OF TRANSPORTATION

T. Ostrom/M. Whiteside/A. Akinsanya
DESIGN OVERSIGHT

SIGN OFF DATE

A.M. Lee
PROJECT ENGINEER
S. Abbas
PROJECT MANAGER

CU 34-0006 (TEMP)
EA 0120R4

BRIDGE NO. 34-0006 (TEMP)
KILOMETER POST 12.6

DISREGARD PRINTS BEARING EARLIER REVISION DATES →

REVISION DATES (PRELIMINARY STAGE ONLY)
6/03/09

SHEET 57B OF 214

DESIGN DETAIL SHEET (METRIC) (REV. 3/1/98)
●DATE● ●TIME● Pen Table File

ORIGINAL SCALE IN MILLIMETERS FOR REDUCED PLANS 0 10 20 30 40 50 60 70 80 90 100

FILE => p:\bb\04-012001\eti\trussretrofit\aktjd11.dgn

FILE => p:\bb\04-012001\eti\trussretrofit\akjd11.dgn
TIME PLOTTED => 6:38:39 PM
DATE PLOTTED => 6/3/2009
USERNAME => pzhao

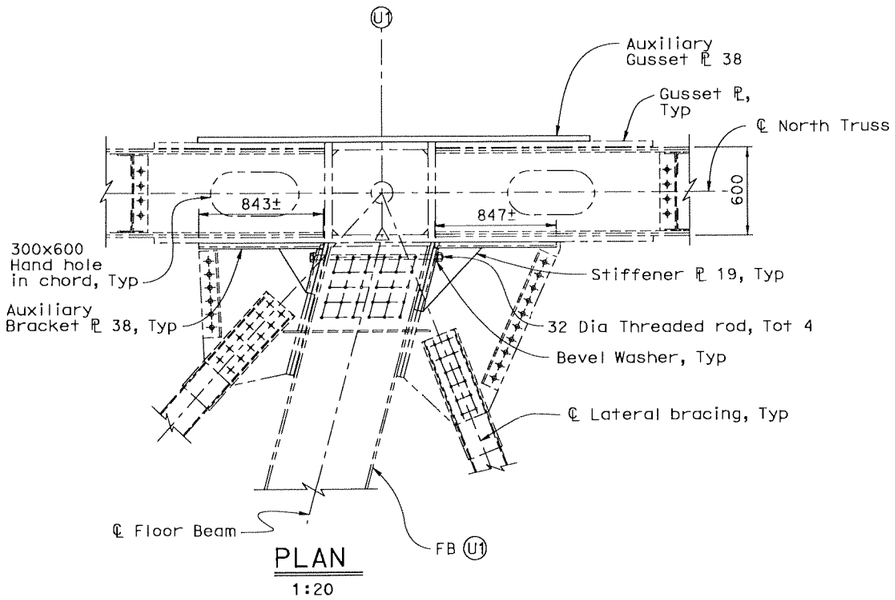

PLAN

1:20

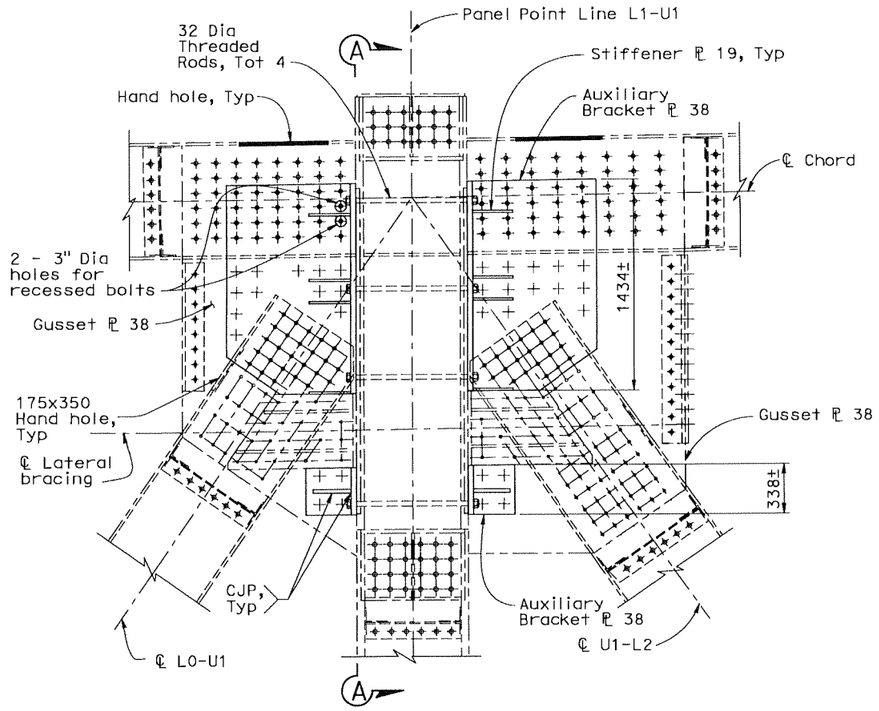

NORTH TRUSS ELEVATION U1

1:20

(Inside Face)

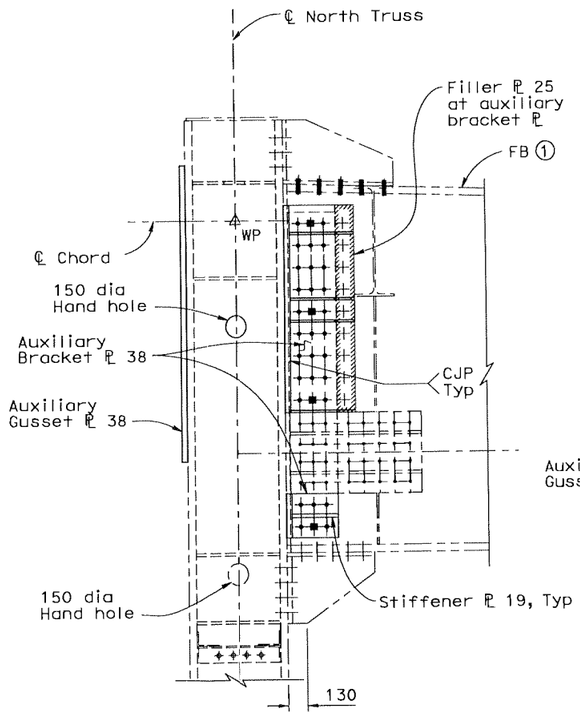

SECTION A-A

1:20

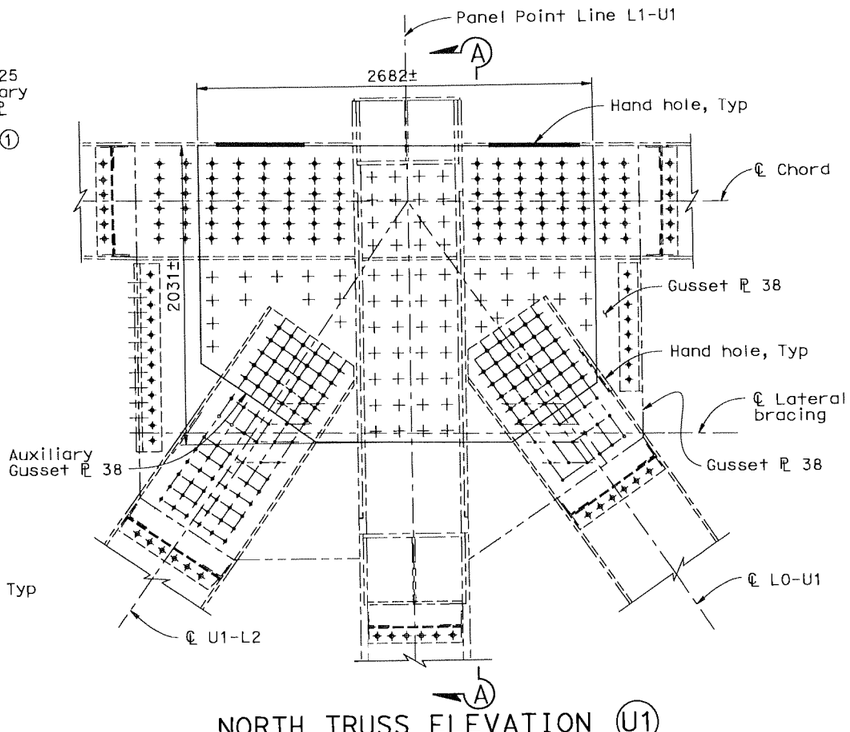

NORTH TRUSS ELEVATION U1

(Outside Face) 1:20

Legend

- Replace with longer bolts
- New bolts 29 Dia
- 32 Dia Threaded rods, A449
- Existing structure
- Auxiliary gusset and bracket plates

CONTRACT NO. 04-0120R4

CONTRACT CHANGE ORDER NO 207

SHEET 4 OF 9

Notes:

1. All bolts are A490 with threads excluded from shear plane, unless noted otherwise.
2. All welds are CJP, unless noted otherwise.
3. For details not shown, see "Truss Joint Details No. 13" sheet.

Caltrans Metric

DIST	COUNTY	ROUTE	KILOMETER POST TOTAL PROJECT	SHEET No	TOTAL
04	SF	80	12.6/13.2		

REGISTERED CIVIL ENGINEER

6-03-09

PLANS APPROVAL DATE

REGISTERED PROFESSIONAL ENGINEER — David Griffith, No. C49125, Exp. 9/30/10, CIVIL, STATE OF CALIFORNIA

The State of California or its officers or agents shall not be responsible for the accuracy or completeness of electronic copies of this plan sheet.

T.Y. LIN / MOFFATT & NICHOL
Two Harrison Street, Suite 500
San Francisco, CA 94105

ALL DIMENSIONS ARE IN MILLIMETERS UNLESS OTHERWISE SHOWN

SAN FRANCISCO OAKLAND BAY BRIDGE
EAST SPAN SEISMIC SAFETY PROJECT

EAST TIE-IN

AUXILIARY GUSSETS AT U1, NORTH

T. Ostrom/M. Whiteside/A. Akinsanya, DESIGN OVERSIGHT		DESIGN	BY D. Griffith, S. Singh	CHECKED R. Nutt	PREPARED FOR THE STATE OF CALIFORNIA DEPARTMENT OF TRANSPORTATION
SIGN OFF DATE		DETAILS	BY P. Zhao	CHECKED A. Lee	
		QUANTITIES	BY H. Nelson	CHECKED A. Lee	

A.M. Lee, PROJECT ENGINEER
S. Abbas, PROJECT MANAGER
CU EA 0120R4

BRIDGE NO. 34-0006 (TEMP)
KILOMETER POST 12.6

DISREGARD PRINTS BEARING EARLIER REVISION DATES →

REVISION DATES (PRELIMINARY STAGE ONLY): 6/03/09

SHEET 57C OF 214

DESIGN DETAIL SHEET (METRIC) (REV. 3/1/98)
●DATE● ●TIME● Pen Table File

ORIGINAL SCALE IN MILLIMETERS FOR REDUCED PLANS 0 10 20 30 40 50 60 70 80 90 100

FILE => p:\bb\04-012001\eti\trussretrofit\aktjd13.dgn

FILE => p:\bb\04-012001\eti\trussretrofit\aktjd13.dgn
TIME PLOTTED => 6:38:41 PM
DATE PLOTTED => 6/3/2009
USERNAME => pzhao

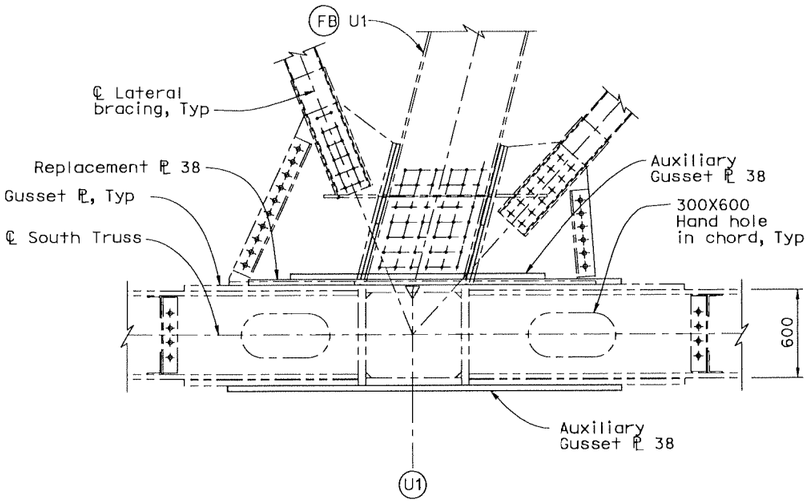

PLAN
1:20

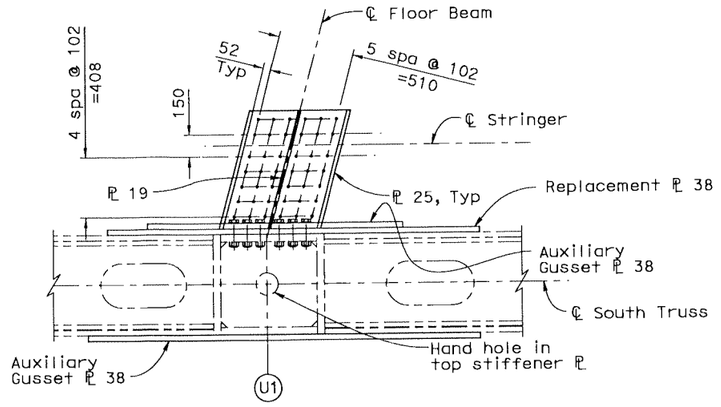

FLOOR BEAM UPPER BRACKET PLAN (AS SHOWN)
1:20

DIST	COUNTY	ROUTE	KILOMETER POST TOTAL PROJECT	SHEET No	TOTAL
04	SF	80	12.6/13.2		

REGISTERED CIVIL ENGINEER

6-03-09
PLANS APPROVAL DATE

REGISTERED PROFESSIONAL ENGINEER — David Griffith — No. C49125 — Exp. 9/30/10 — CIVIL — STATE OF CALIFORNIA

The State of California or its officers or agents shall not be responsible for the accuracy or completeness of electronic copies of this plan sheet.

T.Y. LIN / MOFFATT & NICHOL
Two Harrison Street, Suite 500
San Francisco, CA 94105

Legend

- ✦ Replace with longer bolts
- \+ New bolts 29 Dia
- – – – – Existing structure
- ——— Auxiliary gusset and bracket plates

Notes:

1. All bolts are A490 with threads excluded from shear plane, unless noted otherwise.
2. All welds are CJP, unless noted otherwise.
3. For details not shown, see "Truss Joint Details No. 14" sheet.

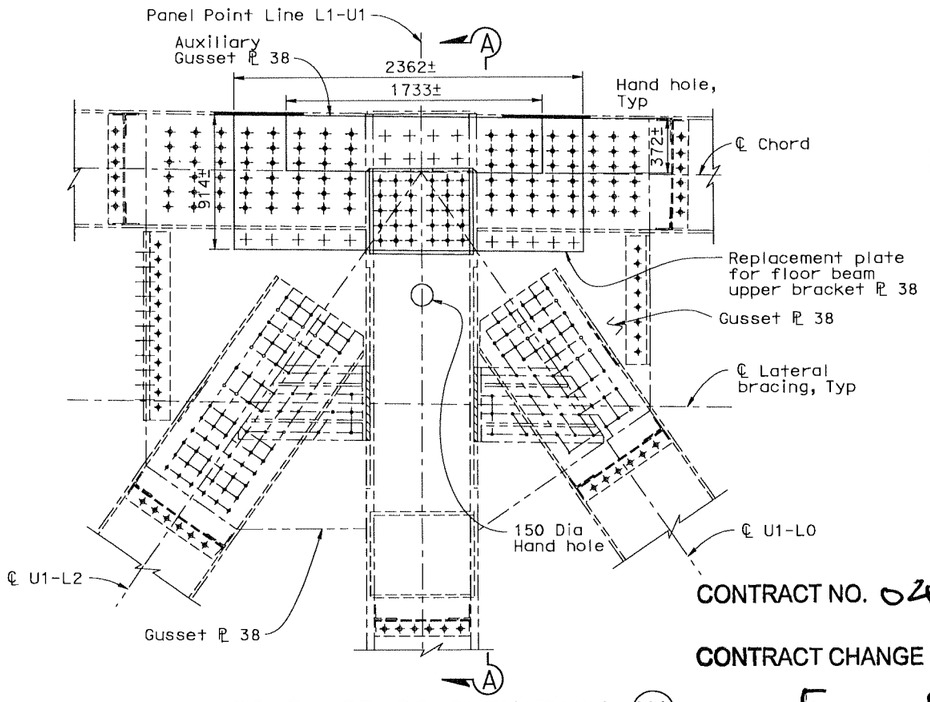

SOUTH TRUSS ELEVATION U1
1:20
(Inside Face)

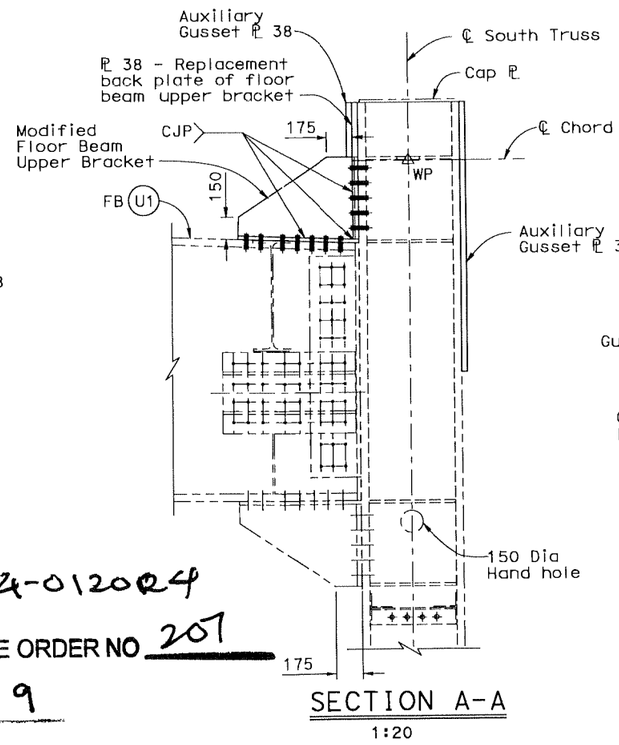

SECTION A-A
1:20

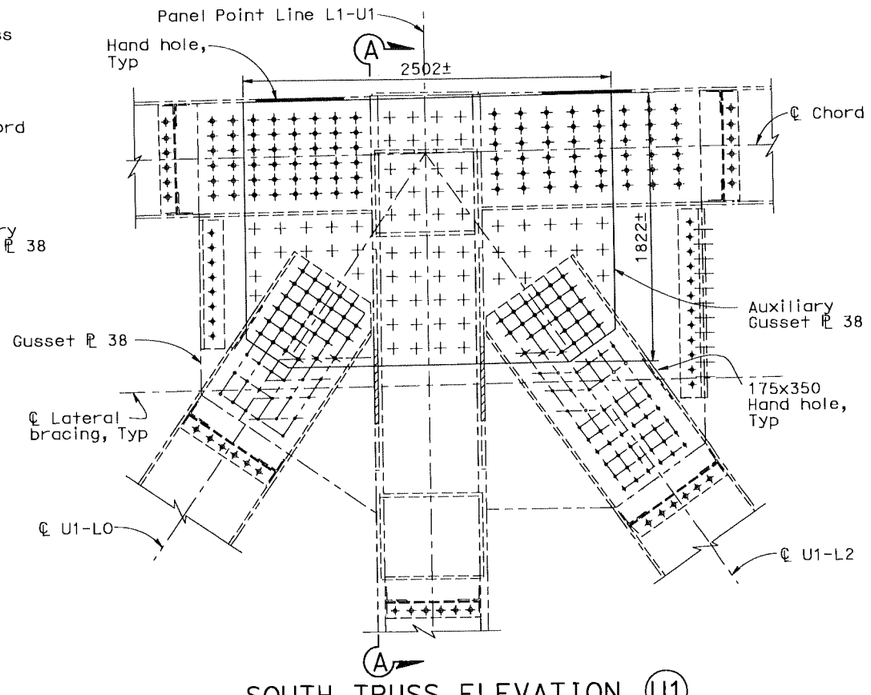

SOUTH TRUSS ELEVATION U1
(Outside Face) 1:20

CONTRACT NO. 04-012024

CONTRACT CHANGE ORDER NO 207

SHEET 5 OF 9

ALL DIMENSIONS ARE IN MILLIMETERS UNLESS OTHERWISE SHOWN

SAN FRANCISCO OAKLAND BAY BRIDGE
EAST SPAN SEISMIC SAFETY PROJECT

EAST TIE-IN

AUXILIARY GUSSETS AT U1, SOUTH

T. Ostrom/M. Whiteside/A. Akinsanya
DESIGN OVERSIGHT

SIGN OFF DATE

	BY	CHECKED
DESIGN	D. Griffith, S. Singh	R. Nutt
DETAILS	P. Zhao	A. Lee
QUANTITIES	H. Nelson	A. Lee

PREPARED FOR THE STATE OF CALIFORNIA DEPARTMENT OF TRANSPORTATION

A.M. Lee — PROJECT ENGINEER
S. Abbas — PROJECT MANAGER
CU 0120R4
EA 0120R4

BRIDGE NO. 34-0006 (TEMP)
KILOMETER POST 12.6

DISREGARD PRINTS BEARING EARLIER REVISION DATES → 6/03/09

REVISION DATES (PRELIMINARY STAGE ONLY)

SHEET 57D OF 214

DESIGN DETAIL SHEET (METRIC) (REV. 3/1/98)
●DATE● ●TIME● Pen Table File

ORIGINAL SCALE IN MILLIMETERS FOR REDUCED PLANS 0 10 20 30 40 50 60 70 80 90 100

FILE => p:\bb\04-012001\eti\trussretrofit\aktjd14.dgn

USERNAME => pzhao DATE PLOTTED => 6/3/2009 TIME PLOTTED => 6:38:42 PM FILE => p:\bb\04-012001\eti\trussretrofit\aktjd14.dgn

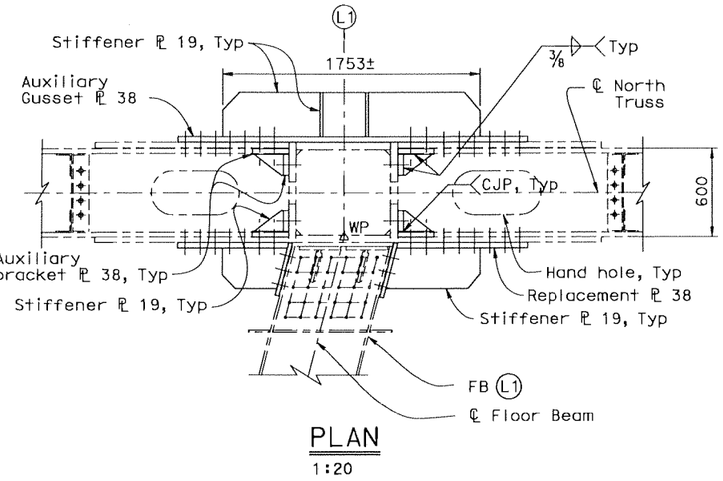

PLAN
1:20

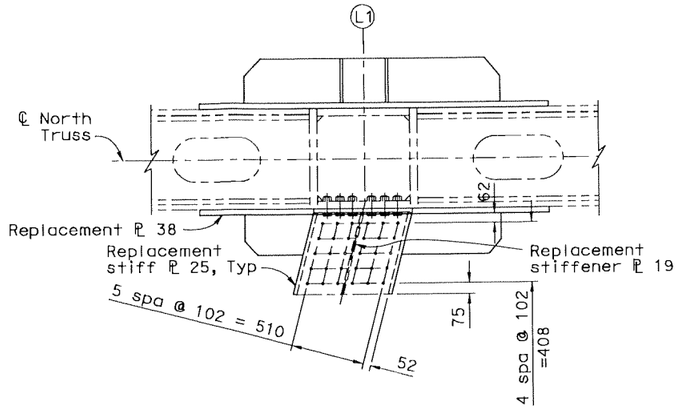

MODIFIED FLOOR BEAM LOWER BRACKET PLAN
1:20
FB not shown for clarity

Notes:

1. All bolts are A490 with threads excluded from shear plane, unless noted otherwise.
2. All welds are CJP, unless noted otherwise.
3. For details not shown, see "Truss Joint Details No. 2" sheet.

Legend

- + Replace with longer bolts
- + New bolts 29 Dia
- ——— Existing structure
- ——— Auxiliary gusset and bracket plates

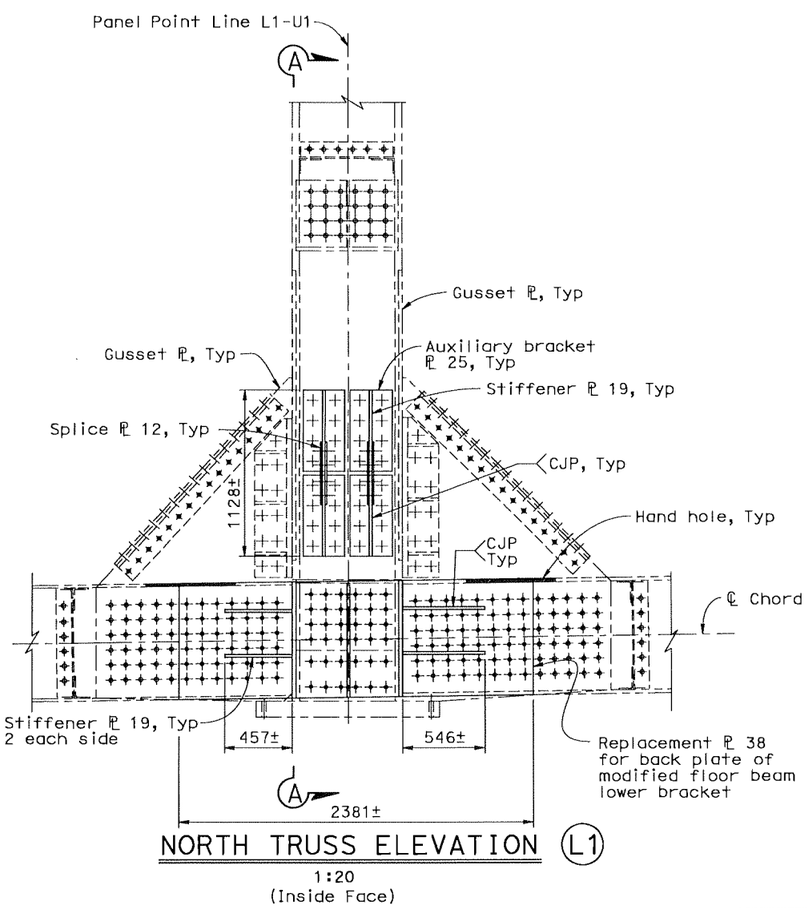

NORTH TRUSS ELEVATION L1
1:20
(Inside Face)

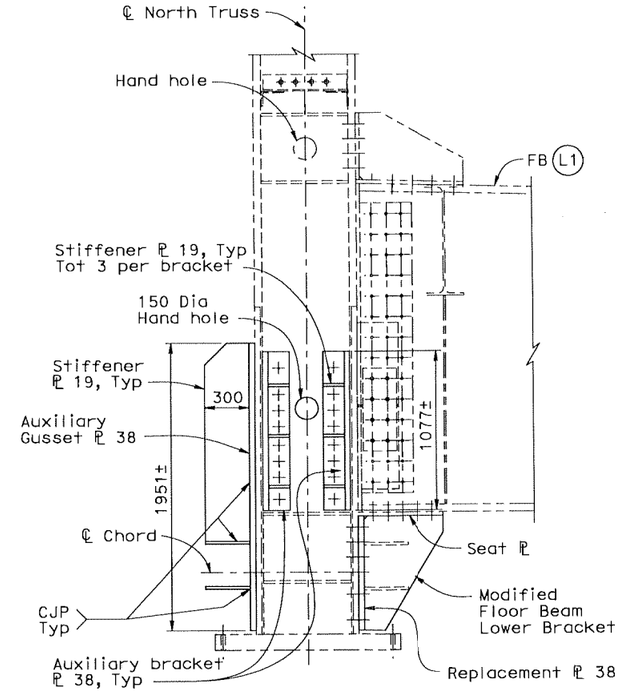

SECTION A-A
1:20

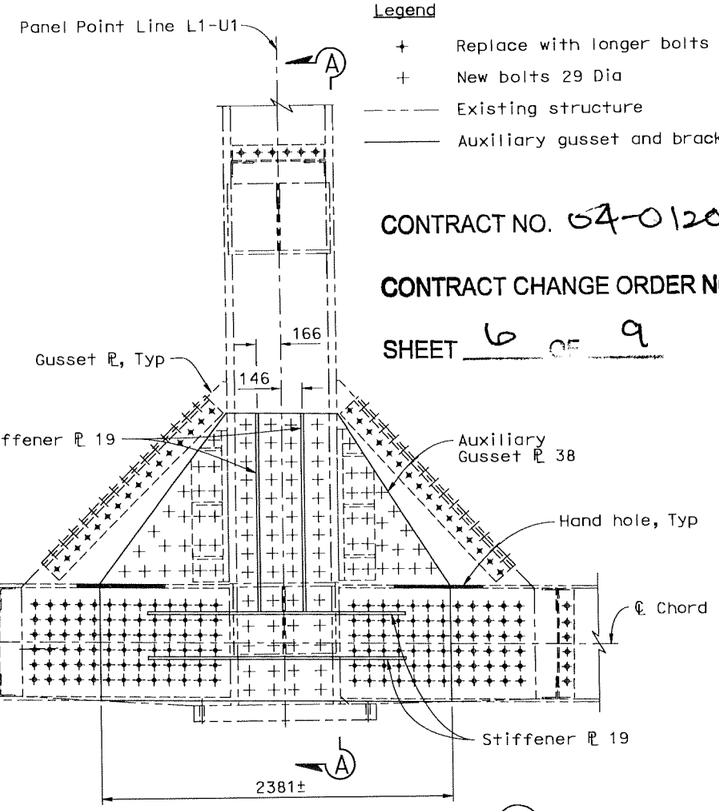

NORTH TRUSS ELEVATION L1
(Outside Face) 1:20

ALL DIMENSIONS ARE IN MILLIMETERS UNLESS OTHERWISE SHOWN

DIST	COUNTY	ROUTE	KILOMETER POST TOTAL PROJECT	SHEET No	TOTAL
04	SF	80	12.6/13.2		

REGISTERED CIVIL ENGINEER — David Griffith, No. C49125, Exp. 9/30/10, CIVIL, REGISTERED PROFESSIONAL ENGINEER, STATE OF CALIFORNIA

6-17-09
PLANS APPROVAL DATE

The State of California or its officers or agents shall not be responsible for the accuracy or completeness of electronic copies of this plan sheet.

T.Y. LIN / MOFFATT & NICHOL
Two Harrison Street, Suite 500
San Francisco, CA 94105

CONTRACT NO. 04-0120R4
CONTRACT CHANGE ORDER NO 207
SHEET 6 OF 9

SAN FRANCISCO OAKLAND BAY BRIDGE
EAST SPAN SEISMIC SAFETY PROJECT

EAST TIE-IN

AUXILIARY GUSSETS AT L1, NORTH

DESIGN	BY D. Griffith, S. Singh	CHECKED R. Nutt	PREPARED FOR THE STATE OF CALIFORNIA DEPARTMENT OF TRANSPORTATION
DETAILS	BY P. Zhao	CHECKED A. Lee	
QUANTITIES	BY H. Nelson	CHECKED A. Lee	

T. Ostrom/M. Whiteside/A. Akinsanya
DESIGN OVERSIGHT
SIGN OFF DATE

A.M. Lee
PROJECT ENGINEER
S. Abbas
PROJECT MANAGER

CU
EA 0120R4

BRIDGE NO. 34-0006 (TEMP)
KILOMETER POST 12.6

DISREGARD PRINTS BEARING EARLIER REVISION DATES →

REVISION DATES (PRELIMINARY STAGE ONLY): 6/17/09

SHEET 57E OF 214

DESIGN DETAIL SHEET (METRIC) (REV. 3/1/98)
DATE *TIME* Pen Table File

ORIGINAL SCALE IN MILLIMETERS FOR REDUCED PLANS 0 10 20 30 40 50 60 70 80 90 100

FILE => p:\bb\04-012001\eti\trussretrofit\aktjd02.dgn

USERNAME => pzhao DATE PLOTTED => 6/17/2009 TIME PLOTTED => 9:57:30 AM FILE => p:\bb\04-012001\eti\trussretrofit\aktjd02.dgn

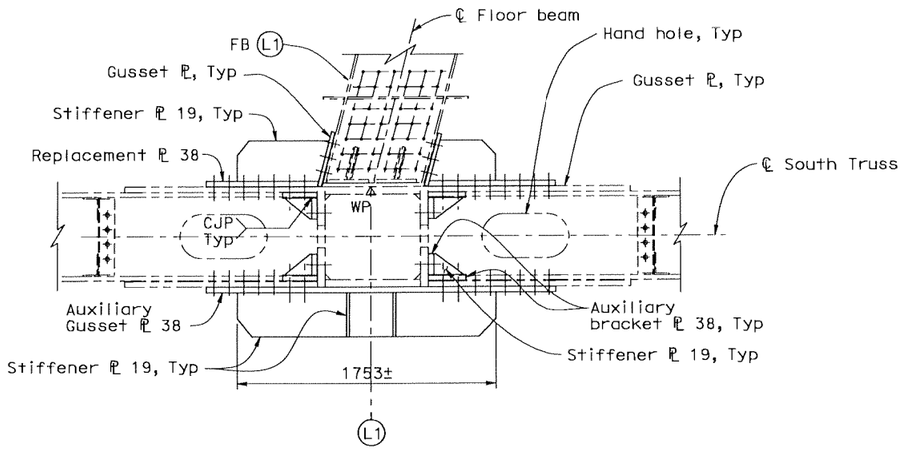

PLAN
1:20

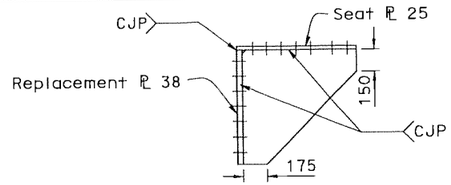

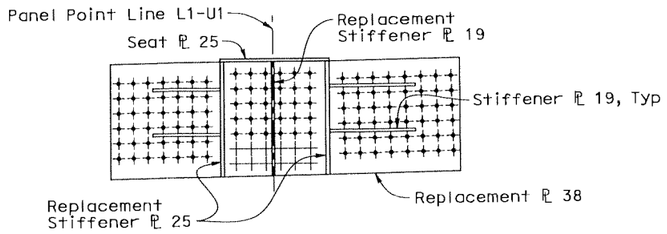

MODIFIED FLOOR BEAM LOWER BRACKET DETAIL
1:20

CONTRACT NO. 04-012024

CONTRACT CHANGE ORDER NO 207

SHEET 7 OF 9

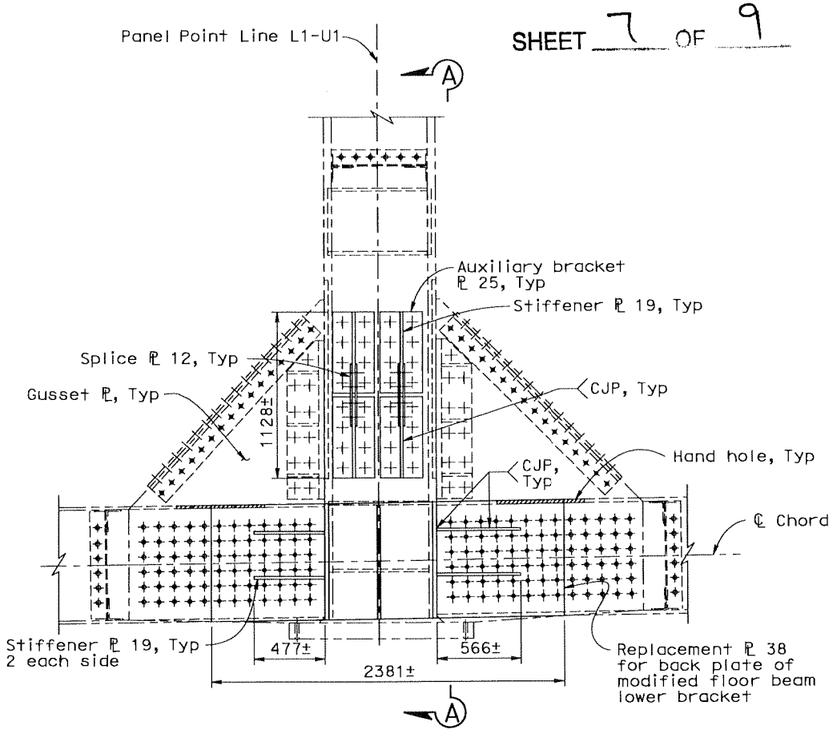

SOUTH TRUSS ELEVATION (L1)
1:20
(Inside Face)

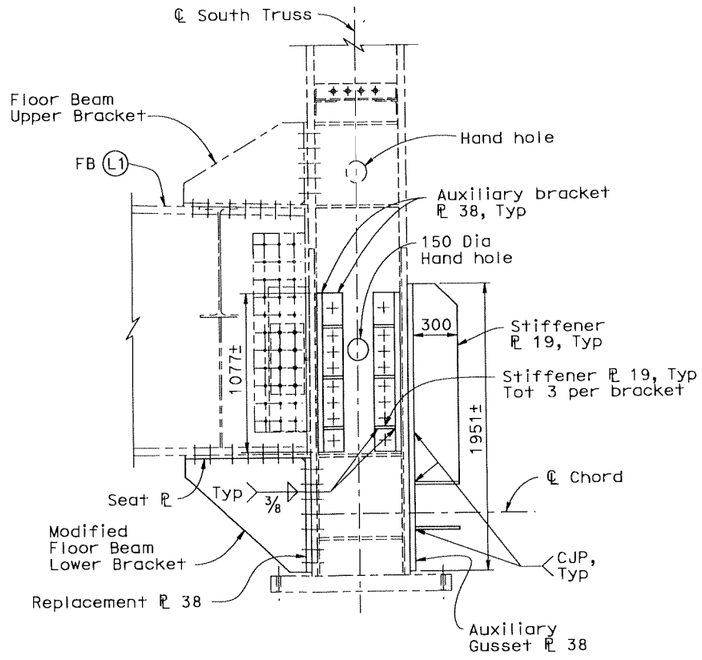

SECTION A-A
1:20

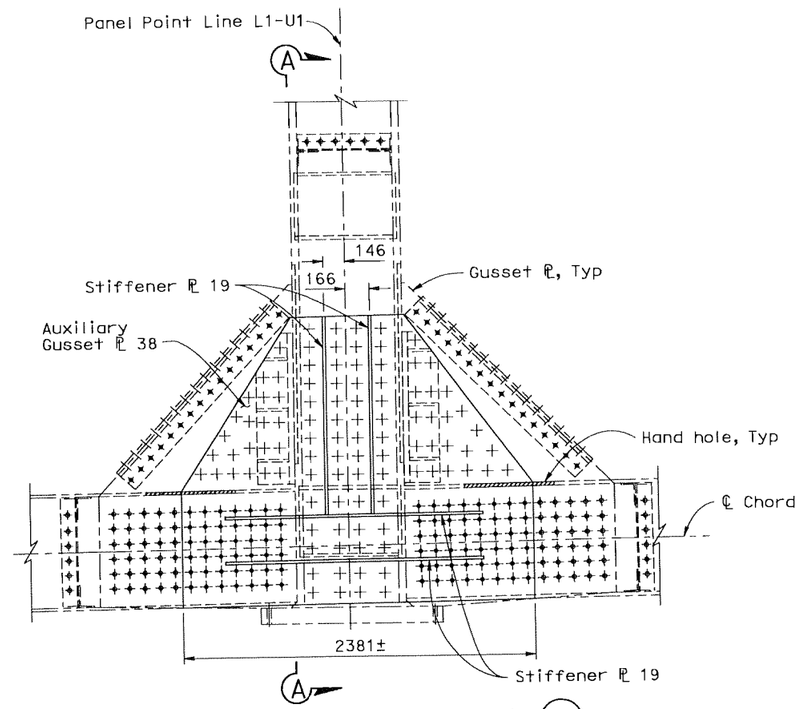

SOUTH TRUSS ELEVATION (L1)
(Outside Face) 1:20

Notes:

1. All bolts are A490 with threads excluded from shear plane, unless noted otherwise.
2. All welds are CJP, unless noted otherwise.
3. For details not shown, see "Truss Joint Details No. 3" sheet.

Legend

- + Replace with longer bolts
- + New bolts 29 Dia
- ----- Existing structure
- ——— Auxiliary gusset and bracket plates

Caltrans Metric

DIST	COUNTY	ROUTE	KILOMETER POST TOTAL PROJECT	SHEET No	TOTAL
04	SF	80	12.6/13.2		

David Griffith
REGISTERED CIVIL ENGINEER

6-17-09
PLANS APPROVAL DATE

REGISTERED PROFESSIONAL ENGINEER — David Griffith — No. C49125 — Exp. 9/30/10 — CIVIL — STATE OF CALIFORNIA

The State of California or its officers or agents shall not be responsible for the accuracy or completeness of electronic copies of this plan sheet.

T.Y. LIN / MOFFATT & NICHOL
Two Harrison Street, Suite 500
San Francisco, CA 94105

ALL DIMENSIONS ARE IN MILLIMETERS UNLESS OTHERWISE SHOWN

SAN FRANCISCO OAKLAND BAY BRIDGE
EAST SPAN SEISMIC SAFETY PROJECT

EAST TIE-IN

AUXILIARY GUSSETS AT L1, SOUTH

DESIGN	D. Griffith, S. Singh	R. Nutt	
DETAILS	P. Zhao	A. Lee	
QUANTITIES	H. Nelson	A. Lee	

T. Ostrom/M. Whiteside/A. Akinsanya
DESIGN OVERSIGHT

SIGN OFF DATE

PREPARED FOR THE STATE OF CALIFORNIA
DEPARTMENT OF TRANSPORTATION

A.M. Lee
PROJECT ENGINEER
S. Abbas
PROJECT MANAGER

BRIDGE NO. 34-0006 (TEMP)
KILOMETER POST 12.6

CU 0120R4
EA 0120R4

DISREGARD PRINTS BEARING EARLIER REVISION DATES

REVISION DATES (PRELIMINARY STAGE ONLY): 6/17/09

SHEET 57F OF 214

DESIGN DETAIL SHEET (METRIC) (REV. 3/1/98)
●DATE● ●TIME● Pen Table File

ORIGINAL SCALE IN MILLIMETERS FOR REDUCED PLANS 0 10 20 30 40 50 60 70 80 90 100

FILE => p:\bb\04-012001\efi\trussretrofit\aktjd03.dgn

FILE => p:\bb\04-012001\efi\trussretrofit\aktjd03.dgn
TIME PLOTTED => 9:57:41 AM
DATE PLOTTED => 6/17/2009
USERNAME => pzhao

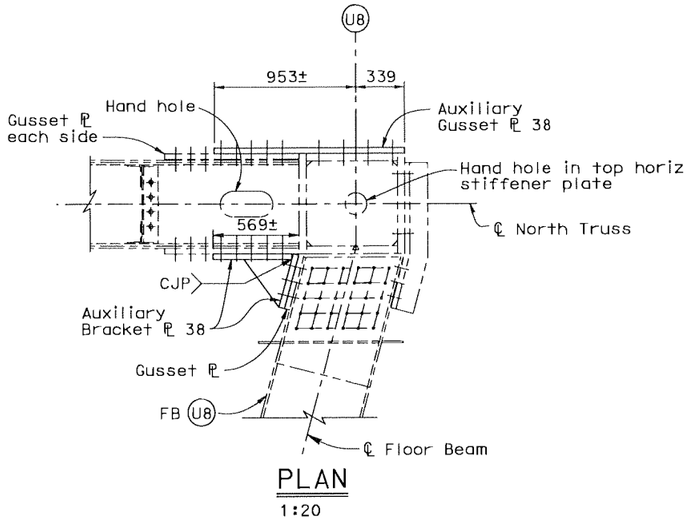

PLAN
1:20

Legend

+ Replace with longer bolts

+ New bolts 29 Dia

– – – – Existing structure

——— Auxiliary gusset and bracket plates

Notes:

1. All bolts are A490 with threads excluded from shear plane, unless noted otherwise.
2. All welds are CJP, unless noted otherwise.
3. For details not shown, see "Truss Joint Details No. 21" sheet.

DIST	COUNTY	ROUTE	KILOMETER POST TOTAL PROJECT	SHEET No	TOTAL
04	SF	80	12.6/13.2		

REGISTERED CIVIL ENGINEER

6-17-09
PLANS APPROVAL DATE

REGISTERED PROFESSIONAL ENGINEER — David Griffith — No. C49125 — Exp. 9/30/10 — CIVIL — STATE OF CALIFORNIA

The State of California or its officers or agents shall not be responsible for the accuracy or completeness of electronic copies of this plan sheet.

T.Y. LIN / MOFFATT & NICHOL
Two Harrison Street, Suite 500
San Francisco, CA 94105

CONTRACT NO. 64-0120R4

CONTRACT CHANGE ORDER NO 207

SHEET 8 OF 9

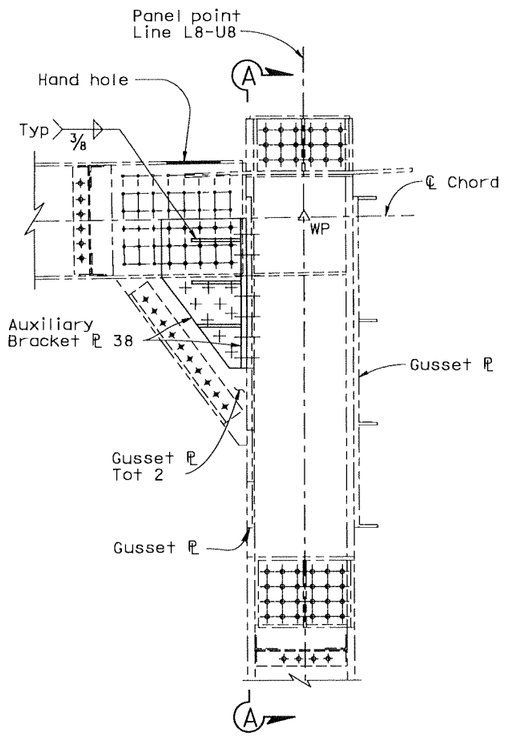

NORTH TRUSS ELEVATION U8
1:20
(Inside Face)

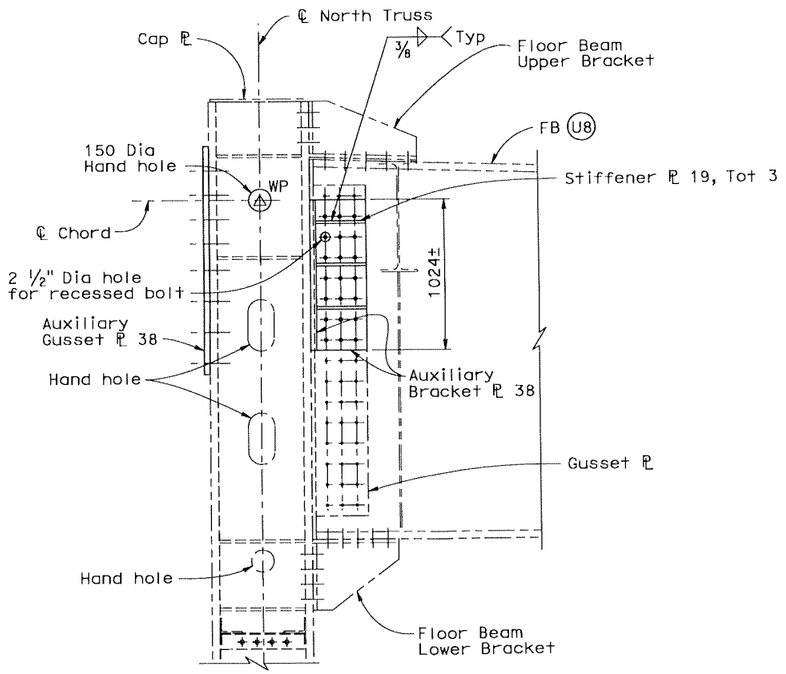

SECTION A-A
1:20

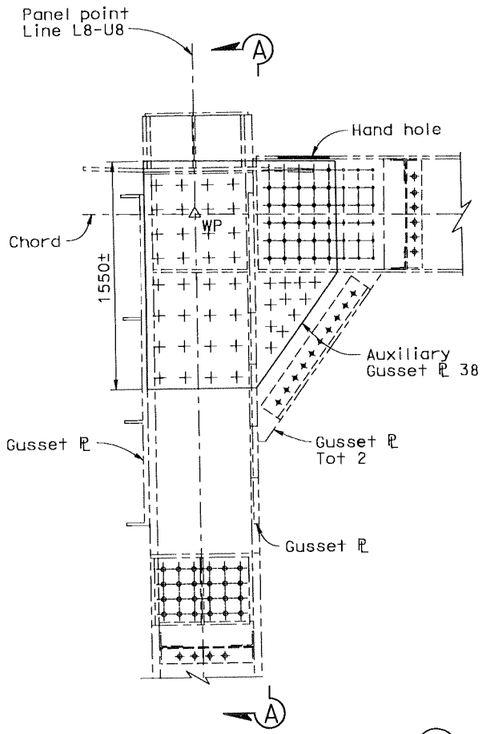

NORTH TRUSS ELEVATION U8
(Outside Face) 1:20

ALL DIMENSIONS ARE IN MILLIMETERS UNLESS OTHERWISE SHOWN

SAN FRANCISCO OAKLAND BAY BRIDGE
EAST SPAN SEISMIC SAFETY PROJECT

EAST TIE-IN

AUXILIARY GUSSETS AT U8, NORTH

DESIGN	BY D. Griffith, S. Singh	CHECKED R. Nutt	
DETAILS	BY P. Zhao	CHECKED A. Lee	
QUANTITIES	BY H. Nelson	CHECKED A. Lee	

T. Ostrom/M. Whiteside/A. Akinsanya
DESIGN OVERSIGHT

SIGN OFF DATE

PREPARED FOR THE STATE OF CALIFORNIA
DEPARTMENT OF TRANSPORTATION

A.M. Lee
PROJECT ENGINEER

S. Abbas
PROJECT MANAGER

CU
EA 0120R4

BRIDGE NO. 34-0006 (TEMP)
KILOMETER POST 12.6

DISREGARD PRINTS BEARING EARLIER REVISION DATES →

REVISION DATES (PRELIMINARY STAGE ONLY): 6/17/09

SHEET 57G OF 214

DESIGN DETAIL SHEET (METRIC) (REV. 3/1/98)
●DATE● ●TIME● Pen Table File

ORIGINAL SCALE IN MILLIMETERS FOR REDUCED PLANS 0 10 20 30 40 50 60 70 80 90 100

FILE => p:\bb\04-012001\eti\trussretrofit\aktjd21.dgn

USERNAME => pzhao
DATE PLOTTED => 6/17/2009
TIME PLOTTED => 9:57:42 AM
FILE => p:\bb\04-012001\eti\trussretrofit\aktjd21.dgn

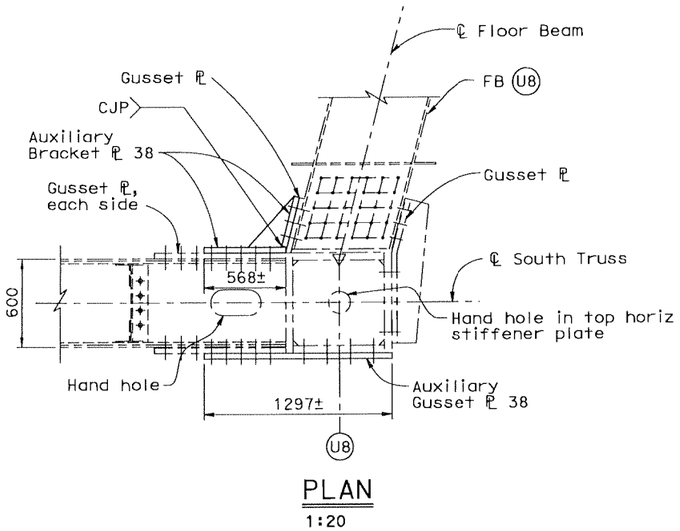

PLAN
1:20

Legend

- Replace with longer bolts
- New bolts 29 Dia
- Existing structure
- Auxiliary gusset and bracket plates

Notes:

1. All bolts are A490 with threads excluded from shear plane, unless noted otherwise.
2. All welds are CJP, unless noted otherwise.
3. For details not shown, see "Truss Joint Details No. 22" sheet.

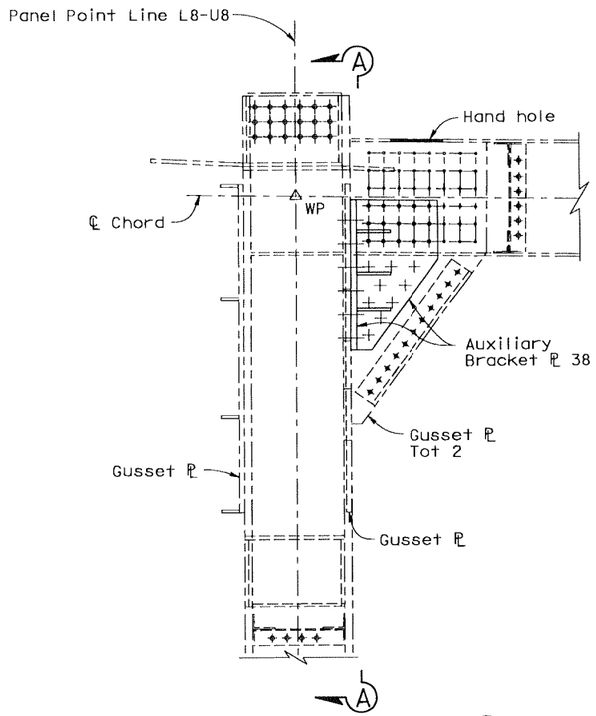

SOUTH TRUSS ELEVATION (U8)
1:20
(Inside Face)

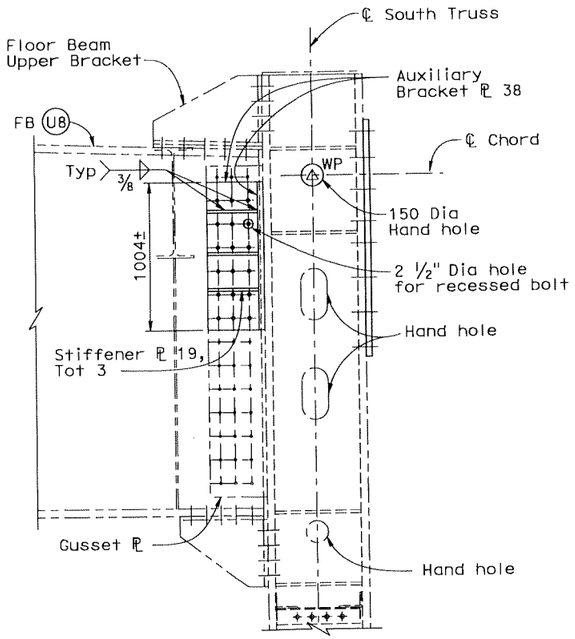

SECTION A-A
1:20

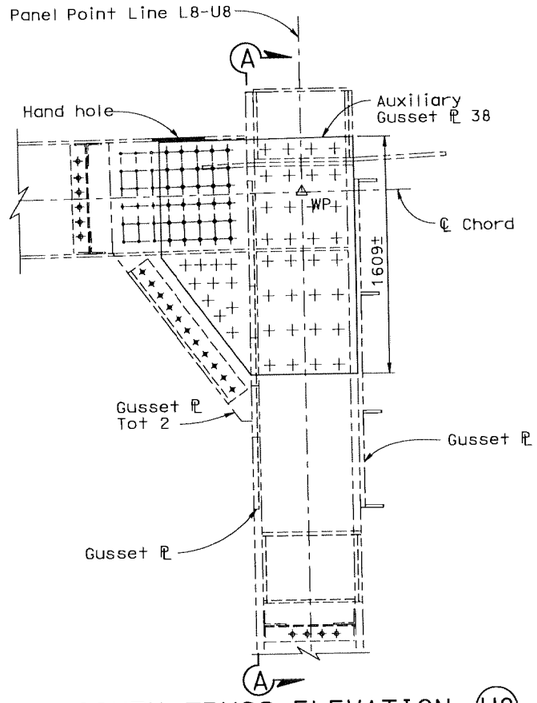

SOUTH TRUSS ELEVATION (U8)
(Outside Face) 1:20

DIST	COUNTY	ROUTE	KILOMETER POST TOTAL PROJECT	SHEET No	TOTAL
04	SF	80	12.6/13.2		

David Griffith
REGISTERED CIVIL ENGINEER

6-17-09
PLANS APPROVAL DATE

REGISTERED PROFESSIONAL ENGINEER — David Griffith, No. C49125, Exp. 9/30/10, CIVIL, STATE OF CALIFORNIA

The State of California or its officers or agents shall not be responsible for the accuracy or completeness of electronic copies of this plan sheet.

T.Y.LIN / MOFFATT & NICHOL
Two Harrison Street, Suite 500
San Francisco, CA 94105

CONTRACT NO. 04-0120R4

CONTRACT CHANGE ORDER NO 207

SHEET 9 OF 9

ALL DIMENSIONS ARE IN MILLIMETERS UNLESS OTHERWISE SHOWN

SAN FRANCISCO OAKLAND BAY BRIDGE
EAST SPAN SEISMIC SAFETY PROJECT

EAST TIE-IN

AUXILIARY GUSSETS AT U8, SOUTH

DESIGN	BY D. Griffith, S. Singh	CHECKED R. Nutt	
DETAILS	BY P. Zhao	CHECKED A. Lee	
QUANTITIES	BY H. Nelson	CHECKED A. Lee	

T. Ostrom/M. Whiteside/A. Akinsanya
DESIGN OVERSIGHT

SIGN OFF DATE

PREPARED FOR THE STATE OF CALIFORNIA
DEPARTMENT OF TRANSPORTATION

A.M. Lee
PROJECT ENGINEER
S. Abbas
PROJECT MANAGER

CU
EA 0120R4

BRIDGE NO. 34-0006 (TEMP)
KILOMETER POST 12.6

DISREGARD PRINTS BEARING EARLIER REVISION DATES → 6/17/09

REVISION DATES (PRELIMINARY STAGE ONLY)

SHEET 57H OF 214

DESIGN DETAIL SHEET (METRIC) (REV. 3/1/98)
●DATE● ●TIME● Pen Table File

ORIGINAL SCALE IN MILLIMETERS FOR REDUCED PLANS 0 10 20 30 40 50 60 70 80 90 100

FILE => p:\bb\04-012001\eti\trussretrofit\aktjd22.dgn

DATE PLOTTED => 6/17/2009 TIME PLOTTED => 9:57:43 AM
USERNAME => pzhao
FILE => p:\bb\04-012001\eti\trussretrofit\aktjd22.dgn

STATE OF CALIFORNIA - DEPARTMENT OF TRANSPORTATION

CONTRACT CHANGE ORDER MEMORANDUM

TO: MIKE FORNER / DEANNA VILCHECK	FILE: E.A. 04 - 0120R4
	CO-RTE-PM SF-80-12.6/13.2
FROM: BILL CASEY	FED. NO. ACBRIM-080-1(097)N
CCO#: 207 SUPPLEMENT#: 0 Category Code: CHPA	CONTINGENCY BALANCE (incl. this change) $34,579,005.59
COST: $400,000.00 INCREASE ☑ DECREASE ☐	HEADQUARTERS APPROVAL REQUIRED? ☑ YES ☐ NO
SUPPLEMENTAL FUNDS PROVIDED: $0.00	IS THIS REQUEST IN ACCORDANCE WITH ENVIRONMENTAL DOCUMENTS? ☑ YES ☐ NO
CCO DESCRIPTION: ETI Truss Added Gusset Plates	PROJECT DESCRIPTION: CONSTRUCT ROUTE 80 TEMP BYPASS STRUCTURE

Original Contract Time:	Time Adj. This Change:	Previously Approved CCO Time Adjustments:	Percentage Time Adjusted: (including this change)	Total # of Unreconciled Deferred Time CCO(s): (including this change)
475 Day(s)	DEF Day(s)	1195 Day(s)	252 %	8

THIS CHANGE ORDER PROVIDES FOR:

design revisions to the steel truss of the East Tie-In (ETI) structure.

This project, the Yerba Buena Island Detour (YBID), was awarded in March 2004 to construct a detour that will allow for the tie in of the new east span of the San Francisco Oakland Bay Bridge to Yerba Buena Island. The YBID encompasses three main structures, the East Tie-In to the existing bridge, the West Tie-In (WTI) to Yerba Buena Island, and the Viaduct structure between the two tie ins.

The original contract was awarded as a performance based contract with the contractor responsible for the design of the structures based upon meeting specified design criteria. The Department issued a December 14, 2006 memo entitled Strategy for South-South Detour Contract Completion which was approved by Tony Anziano (Toll Bridge Program Manager), Richard Land (Chief Engineer) and subsequently by the TBPOC. This memo recommended that the design of the ETI structure be assumed by the Department as opposed to the as-bid performance based contractor design.

Change Orders No. 129 and 140 provided for the fabrication and erection of the steel truss of the ETI structure. Toll Bridge Design has now issued additional plan sheets that provide design enhancements to the 2 panel points at both the upper and lower decks of the truss. These changes provide added gusset plates and various brackets at each connection in order to provide additional strength to those connections. The changes incorporate approximately 15 metric tons of additional steel and both the addition and the replacement of thousands of high strength bolts.

Compensation for the fabrication and delivery of the added plates and brackets shall be paid as extra work at force account at an estimated cost of $400,000.00 which shall be financed from the contract's contingency funds. A cost analysis is on file.

Compensation for the installation and erection of the added plates and brackets and the placement of all additional bolts will be addressed under separate contract change order.

Adjustment of contract time is deferred pending completion of the work specified in this change as it may become the controlling operation in accordance with Section 8-1.07 "Liquidated Damages", of the Standard Specifications and Section 10-1.20 "Time Related Overhead (TRO)" of the Special Provisions.

Compensation for delays resulting from this work will be made in accordance with Section 8-1.09 "Right of Way Delays" of the Standard Specifications and Section 10-1.20 "Time Related Overhead" of the Special Provisions.

This change was concurred with by Alec Melkonians - Asst. Project Manager, Hong Wong - Project Engineer, and Lina Ellis - Structure Maintenance.

ADA Notice: For individuals with sensory disabilities, this document is available in alternate formats. For information call: (916) 654-6410 or TDD (916) 654-3880 or write Records and Forms Management, 1120 N Street, MS-89, Sacramento, CA 95814.

CONCURRED BY:		
Construction Engineer:	Bill Casey, Resident Engineer	Date 7-3-09
Bridge Engineer:		Date
Project Engineer:	Hong Wong, PE	Date 7/1/09
Project Manager:	Alec Melkonians	Date 7/1/09
FHWA Rep.:		Date
Environmental:		Date
Other (specify):	Lina Ellis, Maintenance	Date 7/1/09
Other (specify):		Date
District Prior Approval By:		Date
HQ (Issue Approve) By:	Bob Molera, HQ CCO Engineer	Date 7/16/09
Resident Engineer's Signature:		Date 7-3-09

ESTIMATE OF COST

	THIS REQUEST	TOTAL TO DATE
ITEMS	$0.00	$0.00
FORCE ACCOUNT	$400,000.00	$400,000.00
AGREED PRICE	$0.00	$0.00
ADJUSTMENT	$0.00	$0.00
TOTAL	$400,000.00	$400,000.00

FEDERAL PARTICIPATION

☐ PARTICIPATING ☐ PARTICIPATING IN PART ☑ NONE
☐ NON-PARTICIPATING (MAINTENANCE) ☐ NON-PARTICIPATING

FEDERAL SEGREGATION (if more than one Funding Source or P.I.P. type)
☐ CCO FUNDED PER CONTRACT ☐ CCO FUNDED AS FOLLOWS

FEDERAL FUNDING SOURCE	PERCENT

ADA Notice: For individuals with sensory disabilities, this document is available in alternate formats. For information call: (916) 654-6410 or TDD (916) 654-3880 or write Records and Forms Management, 1120 N Street, MS-89, Sacramento, CA 95814.

STATE OF CALIFORNIA - DEPARTMENT OF TRANSPORTATION

CONTRACT CHANGE ORDER

Change Requested by: Engineer

CCO 207	Suppl. No. 1	Contract No. 04 - 0120R4	Road SF-80-12.6/13.2	FED. AID LOC.:

To: **CC MYERS INC**

You are directed to make the following changes from the plans and specifications or do the following described work not included in the plans and specifications for this contract. ***NOTE: This change order is not effective until approved by the Engineer.***

Description of work to be done, estimate of quantities and prices to be paid. (Segregate between additional work at contract price, agreed price and force account.) Unless otherwise stated, rates for rental of equipment cover only such time as equipment is actually used and no allowance will be made for idle time. This last percentage shown is the net accumulated increase or decrease from the original quantity in the Engineer's Estimate.

Extra Work at Force Account:

Provide additional funds.

Estimated Cost of Extra Work at Force Account $100,000.00

RECEIVED
NOV 18 09
01123

Estimated Cost: Increase ☑ **Decrease** ☐ **$100,000.00**

By **reason of this order the time of completion will be adjusted as follows:** 0 days

Submitted by

Signature	Resident Engineer BILL CASEY	Date 10-3-09

Approval Recommended by

Signature Deanna Vilcheck	Area Construction Manager DEANNA VILCHECK	Date 10/7/09

Engineer Approval by

Signature Deanna Vilcheck	Area Construction Manager DEANNA VILCHECK	Date 10/13/09

We the undersigned contractor, have given careful consideration to the change proposed and agree, if this proposal is approved, that we will provide all equipment, furnish the materials, except as may otherwise be noted above, and perform all services necessary for the work above specified, and will accept as full payment therefor the prices shown above.

NOTE: If you, the contractor, do not sign acceptance of this order, your attention is directed to the requirements of the specifications as to proceeding with the ordered work and filing a written protest within the time therein specified.

Contractor Acceptance by

Signature N/A	(Print name and title) N/A	Date N/A

STATE OF CALIFORNIA - DEPARTMENT OF TRANSPORTATION

CONTRACT CHANGE ORDER MEMORANDUM

DATE: 9/10/2009

TO: MIKE FORNER / DEANNA VILCHECK	FILE: E.A. 04 - 0120R4
FROM: BILL CASEY	CO-RTE-PM SF-80-12.6/13.2
	FED. NO.
CCO#: **207** SUPPLEMENT#: **1** Category Code: **CHXX**	CONTINGENCY BALANCE (incl. this change) **$54,815,400.59**
COST: **$100,000.00** INCREASE ☑ DECREASE ☐	HEADQUARTERS APPROVAL REQUIRED? ☑ YES ☐ NO
SUPPLEMENTAL FUNDS PROVIDED: **$0.00**	IS THIS REQUEST IN ACCORDANCE WITH ENVIRONMENTAL DOCUMENTS? ☑ YES ☐ NO
CCO DESCRIPTION: Steel Fab & Delivery-Addt'l Funds	**PROJECT DESCRIPTION:** CONSTRUCT ROUTE 80 TEMP BYPASS STRUCTURE

Original Contract Time:	Time Adj. This Change:	Previously Approved CCO Time Adjustments:	Percentage Time Adjusted: (including this change)	Total # of Unreconciled Deferred Time CCO(s): (including this change)
475 Day(s)	**0** Day(s)	**1195** Day(s)	**252** %	**7**

THIS CHANGE ORDER PROVIDES FOR:

additional funds.

This project, the Yerba Buena Island Detour (YBID), was awarded in March 2004 to construct a detour that will allow for the tie in of the new east span of the San Francisco Oakland Bay Bridge to Yerba Buena Island. The YBID encompasses three main structures, the East Tie-In to the existing bridge, the West Tie-In (WTI) to Yerba Buena Island, and the Viaduct structure between the two tie ins.

The original contract was awarded as a performance based contract with the contractor responsible for the design of the structures based upon meeting specified design criteria. The Department issued a December 14, 2006 memo entitled Strategy for South-South Detour Contract Completion which was approved by Tony Anziano (Toll Bridge Program Manager), Richard Land (Chief Engineer) and subsequently by the TBPOC. This memo recommended that the design of the ETI structure be assumed by the Department as opposed to the as-bid performance based contractor design.

The original contract change order calls for a design revisions to the steel truss of the East Tie-In (ETI) structure. These changes provide added gusset plates and various brackets at each connection in order to provide additional strength to those connections. The changes incorporate approximately 15 metric tons of additional steel and both the addition and the replacement of thousands of high strength bolts.

This change is necessary since fabrication work was more extensive than estimated and due to additional cost to expedite the material delivery. The existing funds is not enough to cover this change, therefore, a request for additional funds of $100,000.00 is needed, which can be financed by the contract's contingency funds.

Contractor's signature is not required on Extra Work at Force Account request for additional funds change orders, therefore, it is proposed to process this change unilaterally.

No adjustment of contract time is warranted as the work will not affect the controlling operation.

Alec Melkonians, Asst. Project Manager, and Hong Wong, Project Engineer, concurred on this change. Maintenance concurrence is not required since Lina Ellis - Structure Maintenance already concurred on the original CCO.

ADA Notice: For individuals with sensory disabilities, this document is available in alternate formats. For information call: (916) 654-6410 or TDD (916) 654-3880 or write Records and Forms Management, 1120 N Street, MS-89, Sacramento, CA 95814.

CONCURRED BY:		
Construction Engineer:	Bill Casey, Resident Engineer	Date 10-3-09
Bridge Engineer:		Date
Project Engineer:	Hong Wong, PE	Date 9/11/09
Project Manager:	Alec Melkonians	Date 9/10/09
FHWA Rep.:		Date
Environmental:		Date
Other (specify):	Lina Ellis, Maintenance	Date 7/1/09
Other (specify):		Date
District Prior Approval By:		Date
HQ (Issue .Approve) By:	Bob Molera, HQ CCO Engineer	Date 10/8/09
Resident Engineer's Signature:		Date 10-3-09

ESTIMATE OF COST

ITEMS	THIS REQUEST	TOTAL TO DATE
FORCE ACCOUNT	$0.00	$0.00
AGREED PRICE	$100,000.00	$500,000.00
ADJUSTMENT	$0.00	$0.00
TOTAL	$0.00	$0.00
	$100,000.00	$500,000.00

FEDERAL PARTICIPATION

☐ PARTICIPATING ☐ PARTICIPATING IN PART ☑ NONE
☐ NON-PARTICIPATING (MAINTENANCE) ☐ NON-PARTICIPATING

FEDERAL SEGREGATION (if more than one Funding Source or P.I.P. type)
☐ CCO FUNDED PER CONTRACT ☐ CCO FUNDED AS FOLLOWS

FEDERAL FUNDING SOURCE	PERCENT

ADA Notice: For individuals with sensory disabilities, this document is available in alternate formats. For information call: (916) 654-6410 or TDD
Records and Forms Management, 1120 N Street, MS-89, Sacramento, CA 95814

CONTRACT CHANGE ORDER

Change Requested by: Engineer

CCO: 208	Suppl. No. 0	Contract No. 04 - 0120R4	Road SF-80-12.6/13.2	FED. AID LOC.:

To: CC MYERS INC

You are directed to make the following changes from the plans and specifications or do the following described work not included in the plans and specifications for this contract. ***NOTE: This change order is not effective until approved by the Engineer.***

Description of work to be done, estimate of quantities and prices to be paid. (Segregate between additional work at contract price, agreed price and force account.) Unless otherwise stated, rates for rental of equipment cover only such time as equipment is actually used and no allowance will be made for idle time. This last percentage shown is the net accumulated increase or decrease from the original quantity in the Engineer's Estimate.

Incorporate the changes to the West Tie-In portion of the Temporary Bypass Structure (Bridge No. 34-0006 (TEMP)) as shown on Sheets No. 2 through 22 of this change order.

Adjustment of Compensation at Lump Sum:

For all costs associated with the changes incorporated into the West Tie-In structure under this change order, the Contractor shall be compensated an agreed lump sum of $131,600.00. This lump sum constitutes full compensation, including all markups, for all costs associated with this change.

Adjustment of Compensation at Lump Sum $131,600.00

Estimated Cost: **Increase** ☑ **Decrease** ☐ **$131,600.00**

By reason of this order the time of completion will be adjusted as follows: 0 days

Submitted by

Signature	Resident Engineer	Date
Jeannie Balderramos	JEANNIE BALDERRAMOS	3-23-10

Approval Recommended by

Signature	Area Construction Manager	Date
Deanna Vilcheck	DEANNA VILCHECK	3/30/10

Engineer Approval by

Signature	Area Construction Manager	Date
Deanna Vilcheck	DEANNA VILCHECK	5/4/10

We the undersigned contractor, have given careful consideration to the change proposed and agree, if this proposal is approved, that we will provide all equipment, furnish the materials, except as may otherwise be noted above, and perform all services necessary for the work above specified, and will accept as full payment therefor the prices shown above.

NOTE: If you, the contractor, do not sign acceptance of this order, your attention is directed to the requirements of the specifications as to proceeding with the ordered work and filing a written protest within the time therein specified.

Contractor Acceptance by

Signature	(Print name and title)	Date
	DANIEL E. Hamick, PRESIDENT	4/21/10

CONTRACT CHANGE ORDER

Change Requested by: Engineer

CCO: 208	Suppl. No. 0	Contract No. 04 - 0120R4	Road SF-80-12.6/13.2	FED. AID LOC.:

To: CC MYERS INC

You are directed to make the following changes from the plans and specifications or do the following described work not included in the plans and specifications for this contract. ***NOTE: This change order is not effective until approved by the Engineer.***

Description of work to be done, estimate of quantities and prices to be paid. (Segregate between additional work at contract price, agreed price and force account.) Unless otherwise stated, rates for rental of equipment cover only such time as equipment is actually used and no allowance will be made for idle time. This last percentage shown is the net accumulated increase or decrease from the original quantity in the Engineer's Estimate.

Incorporate the changes to the West Tie-In portion of the Temporary Bypass Structure (Bridge No. 34-0006 (TEMP)) as shown on Sheets No. 2 through 22 of this change order.

Adjustment of Compensation at Lump Sum:

For all costs associated with the changes incorporated into the West Tie-In structure under this change order, the Contractor shall be compensated an agreed lump sum of $131,600.00. This lump sum constitutes full compensation, including all markups, for all costs associated with this change.

Adjustment of Compensation at Lump Sum $131,600.00

Estimated Cost: **Increase** ☑ **Decrease** ☐ **$131,600.00**

By reason of this order the time of completion will be adjusted as follows: 0 days

Submitted by

Signature	Resident Engineer	Date
Jeannie Balderramos	JEANNIE BALDERRAMOS	3-23-10

Approval Recommended by

Signature	Area Construction Manager	Date
Deanna Vilcheck	DEANNA VILCHECK	3/30/10

Engineer Approval by

Signature	Area Construction Manager	Date
Deanna Vilcheck	DEANNA VILCHECK	5/4/10

We the undersigned contractor, have given careful consideration to the change proposed and agree, if this proposal is approved, that we will provide all equipment, furnish the materials, except as may otherwise be noted above, and perform all services necessary for the work above specified, and will accept as full payment therefor the prices shown above.

NOTE: If you, the contractor, do not sign acceptance of this order, your attention is directed to the requirements of the specifications as to proceeding with the ordered work and filing a written protest within the time therein specified.

Contractor Acceptance by

Signature	(Print name and title)	Date
	DANIEL E. Hamick, PRESIDENT	4/21/10

SUPERSTRUCTURE CONCRETE

Superstructure concrete including closure concrete, and cast-in-place deck joints shall conform to the following requirements:

The concrete mix for the superstructure concrete shall be designed to achieve the following additional properties:

A. Modulus of Elasticity: The modulus of elasticity of portland cement concrete shall be at least *31,000 MPa* at 28 days when tested in accordance with the requirements in California Test 522. The samples shall be moist-cured for 7 days, followed by air drying at 23oC and 50% relative humidity until test age. The modulus shall also be reported at 3, 7, 56 and 90 days. Test specimen size shall be same as compressive strengths. Test results shall be based on the average of three test specimens at each age.

B. Creep: The specific creep coefficient, as determined in accordance with the requirements in ASTM Designation: C 512, after 365 days of loading, shall not exceed 75 millionths/MPa. Test specimens shall be 152 x 305 mm cylinders and shall be moist-cured for 7 days, followed by air drying at 23oC and 50% relative humidity. Test cylinders shall be loaded at 28 days to a stress of 20% to 40% of the 56-day design compressive strength shown on the plans but not less than 20% nor greater than 40% of the measured strength at 28 days. For submittal of prequalification data, coefficients after 28, 56 and 90 days of loading shall be submitted and used to predict the coefficient at 365 day creep coefficient. The Contractor shall predict the coefficient at 365 days based on the procedures of CEB-FIP Model Code for Concrete Structures, by the Comite Euro-International de Beton. Mix design approval shall be contingent upon the 365 day creep coefficient satisfying the stated requirement. The Contractor shall report the 365 day creep coefficient determined from test results when available.

C. Shrinkage: The shrinkage strain of Portland cement concrete shall not exceed 0.045% after 180 days of drying in accordance with the requirements in ASTM Designation: C 157. Sample size shall be 100 x 100 x 285 mm. Samples shall be moist-cured for 7 days followed by air drying at 23oC and 50% relative humidity. Shrinkage strain shall be calculated as the change in strain from the beginning of drying at 7 days.

Concrete testing shall be performed by the Contractor's independent test laboratory. The laboratory shall be accredited or inspected for conformance to the requirements in ASTM Designation: C 1077 and approved by the Engineer. All testing shall be performed by ACI certified technicians. In addition to the requirements of Section 90-9, "Compressive Strength," of the Standard Specifications, concrete for the superstructure shall have the following additional testing performed by the Contractor's independent testing laboratory:

A. Modulus or Elasticity, Creep and Shrinkage test results shall be submitted to the Engineer for each proposed mix. The test results shall be submitted in both printed form and electronic media. The engineer will notify the Contractor in writing when the test results are determined to be complete. Once the Engineer has determined the test results to be complete, the Contractor shall all the Engineer 25

working days to review the test results. Superstructure Concrete shall not be placed until the Engineer has reviewed the test reports and responded in writing.

B. Three samples taken from the first placement shall be tested for modulus of elasticity in accordance with ASTM C 469, "Standard Test Method for Static Modulus of Elasticity and Poisson's Ratio of Concrete in Compression." The results shall be reported as an average of the three samples. Samples shall be moist-cured for 3 days and then tested to determine 3-day results.

C. Two samples taken from each placement shall be tested for creep in accordance with the requirements in ASTM Designation: C 512, "Standard Test Method for Creep of Concrete in Compression." Creep data shall be presented both as specific creep (creep strain/applied creep load) and creep coefficient (creep deformation as a ratio to initial elastic deformation). The test cylinders shall be loaded at 28 days to a stress of 20 to 40% of the 56-day design compressive strength shown on the plans but not less than 20% nor greater than 40% of the measured strength at 28 days. Coefficients after 28, 56 and 90 days under load shall be submitted and used to predict the coefficient at 365 days based on the procedures of CEB-FIP Model Code for Concrete Structures, by the Comite Euro-International de Beton.

D. Samples taken from each placement shall be tested for shrinkage in accordance with the requirements in ASTM Designation: C 157. Sample size shall be 100 x 100 x 285 mm. The samples shall be moist-cured for 7 days followed by air drying at 23oC and 50% relative humidity. Shrinkage strain shall be calculated as the change in strain from the beginning of drying at 7 days.

E. Three full size 150 x 300 mm and three 102 x 203 mm reserve cylinders shall be taken for each placement. The cylinders shall be stored near the placement and shall be kept for the duration of the project. Cylinders shall be stripped from their molds when formwork at the corresponding placement is stripped. Thereafter, specimens shall be stored and protected from rain and direct sunlight. Each cylinder shall be clearly identified as to the location and date cast using permanent markers and they shall be stored in such a way that specific cylinders are easily retrievable. At the completion of the project any cylinders not requested by the Engineer shall become the property of the Contractor and shall be removed and disposed of as provided in Section 7-1.13, "Disposal of Material Outside the Right of Way," of the Standard Specifications.

F. Superstructure camber values shown on the plans are calculated based on estimated modulus of elasticity and time-dependent creep and shrinkage values. After approval of the modulus of elasticity, creep and shrinkage test results, the Engineer reserves the right to modify the camber values for the superstructure during the 25 working day review period specified.

G. The Contractor shall measure the deflection of the superstructure to the nearest millimeter each working day from the time prestressing is completed until the closures are placed and shall report the measured values to the Engineer no less than once every 7 days.

As directed by the Engineer, concrete testing of production concrete shall be performed by the Contractor's independent test laboratory. The laboratory shall be accredited or inspected for conformance to the requirements in ASTM Designation: C 1077 and approved by the Engineer. All testing shall be performed by ACI certified technicians.

The superstructure concrete shall have the following testing performed by the Contractor's independent testing laboratory:

A. Compressive Strength required per ASTM C39

Test Age (days)	Test Cylinders
3	2
7	2
28	2
56	2
90	2
180	2
360	2

Total 12 compressive strength cylinders

B. Modulus of Elasticity Determinations required by ASTM C 469

Test Age (days)	Test Cylinders
3	3
7	3
28	3
56	3
90	3
180	3
360	3

The 3 day test specimens shall be moist cured for 3 days, the other test cylinders shall be moist cured for 7 days followed by air drying at 23 degrees C and at 50% relative humidity until the designated test age.

C. Creep of Concrete in Compression required by ASTM C 512.
Test specimens shall be 152 x 305 mm (6x12 in) cylinders and shall be moist-cured for 7 days, followed by air drying at 23° C and 50% relative humidity. Test cylinders shall be loaded at 28 days to a stress of 20% to 40% of the 28-day design compressive strength of the compressive strength test cylinders.

Both the creep coefficients and as well as the specific creep (creep strain/applied creep load) for the concrete mix shall be determined at 28,56,90,180, and 360 days. This data shall be used to predict the creep coefficient at 365 days.

Sufficient test cylinders shall be cast from the concrete mix to determine the compressive strength under the indicated curing periods - 3 and 7 day moist curing periods. The average of 2 additional test specimens required for shrinkage determinations and two to three specimens are required for shrinkage required for the creep frame apparatus. At a minimum twenty additional test cylinders will be required to complete the creep test requirements.

D. Length Change Determination required byASTM C157 Modified Shrinkage Tests

Shrinkage tests of the concrete mix shall be performed in accordance with the indicated test procedure.

Sample size shall be 100 x 100 x 285 mm. The average of 3 prisms shall be used to determine shrinkage at 3,7,28,90,180 and 360 days. The shrinkage shall not exceed 0.045% after 180 days of drying.

Samples shall be moist-cured for 7 days followed by air drying at 23° C and at 50% relative humidity. Shrinkage strain shall be calculated as the change in strain from the beginning of drying at 7 days.

Concrete test data of production concrete shall be submitted to the Engineer for information only.

CONTRACT NO.

CONTRACT CHANGE ORDER NO 208

SHEET 5 OF 22

Frame 1 CIP reinforced concrete slab with P/S bent caps (Upper Deck)
Frame 2 CIP reinforced concrete box girder with P/S bent caps (Upper Deck)
Frame 3 CIP reinforced concrete slab (Lower Deck)
For notes and Legend see "General Plan Notes" sheet

CONTRACT CHANGE ORDER NO. -
SHEET 1 OF ..

MARK	DATE	REVISION(S) DESCRIPTIONS	DES	CHK	DET
6	02-03-09	Remove Luminaire			
5	01-09-09	Revised Station			
4	01-09-09	Dimensions show normal distance from LOL to face of barrier	CD	MC	GS

REGISTERED CIVIL ENGINEER: DATE:

MARK	DATE	REVISION(S) DESCRIPTIONS	DES	CHK	DET
3	03-25-08	Begin concrete railing	CD	MC	GS
2	03-25-08	Deck Drainage	CD	MC	GS
1	03-25-08	Begin concrete railing	CD	MC	GS

REGISTERED CIVIL ENGINEER: DATE:

04	SF	80									12.6/13.2		

02-03-09
REGISTERED CIVIL ENGINEER DATE

PLANS APPROVAL DATE

The State of California or its officers or agents shall not be responsible for the accuracy or completeness of electronic copies of this plan sheet.

CONTRACT CHANGE ORDER NO. 208
SHEET 6 OF 22

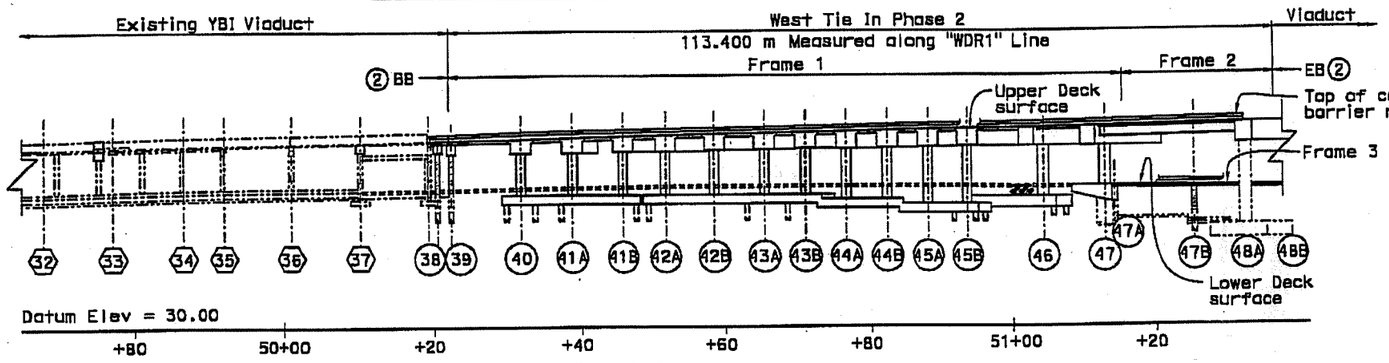

ELEVATION
1:400

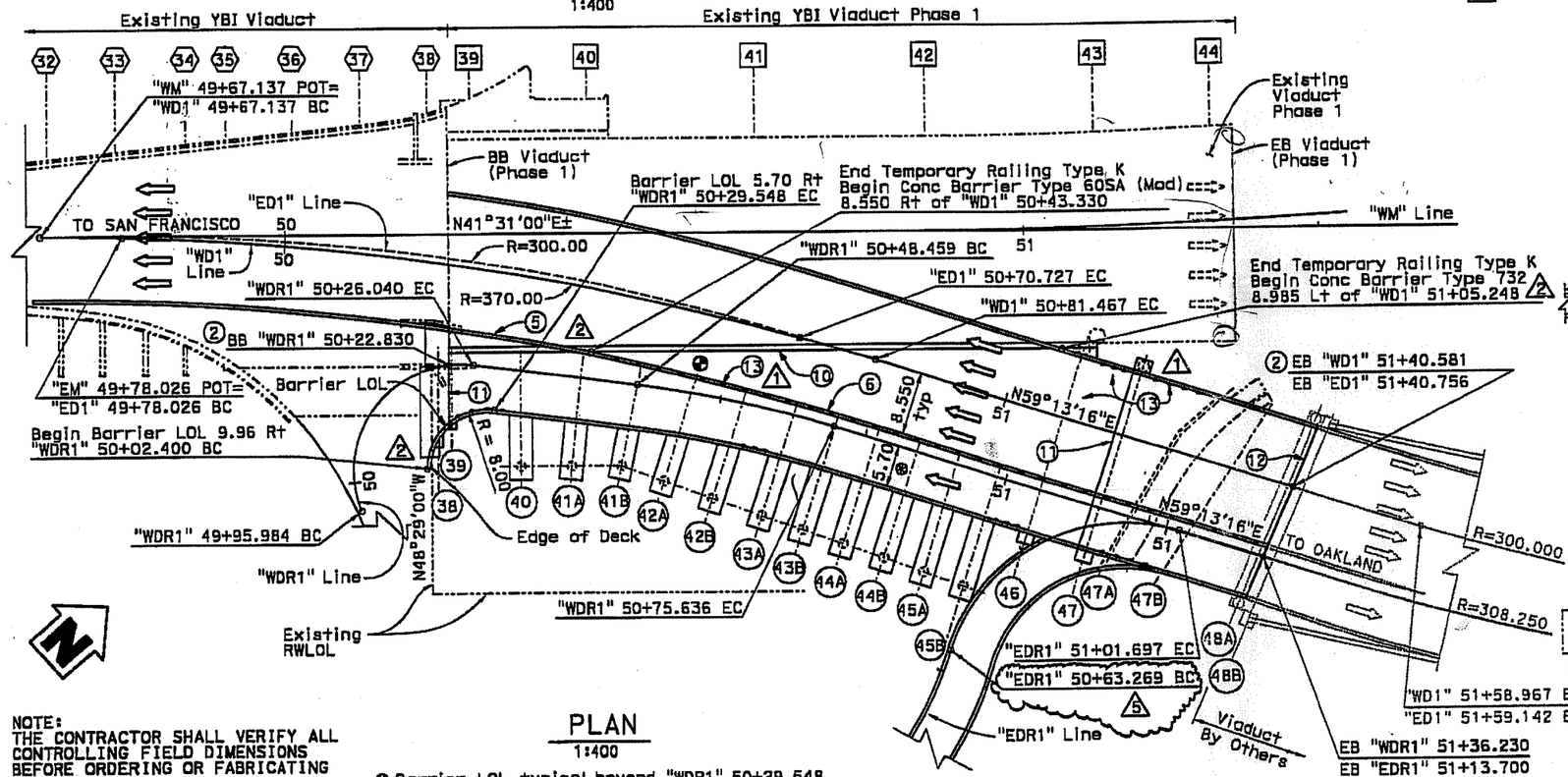

PLAN
1:400

NOTE:
THE CONTRACTOR SHALL VERIFY ALL CONTROLLING FIELD DIMENSIONS BEFORE ORDERING OR FABRICATING ANY MATERIAL.

⊛ Barrier LOL typical beyond "WDR1" 50+29.548

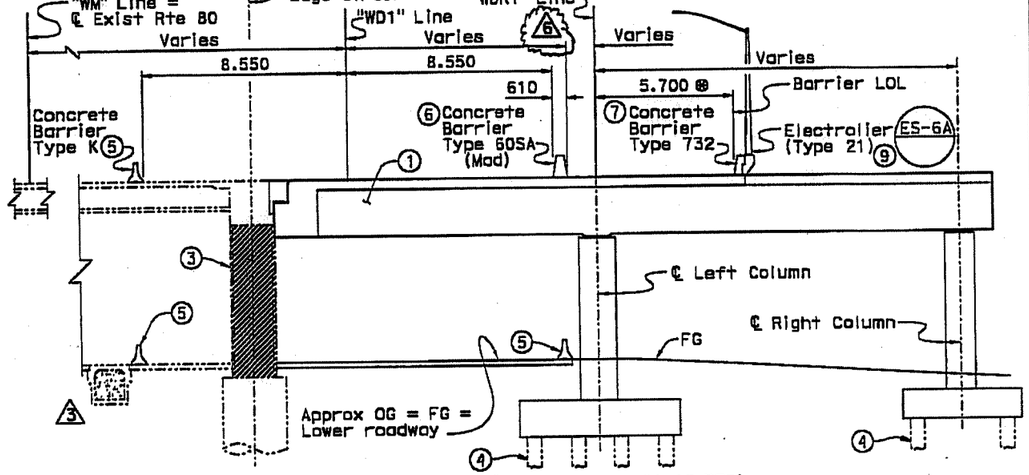

TYPICAL SECTION (FRAME 1)
1:125

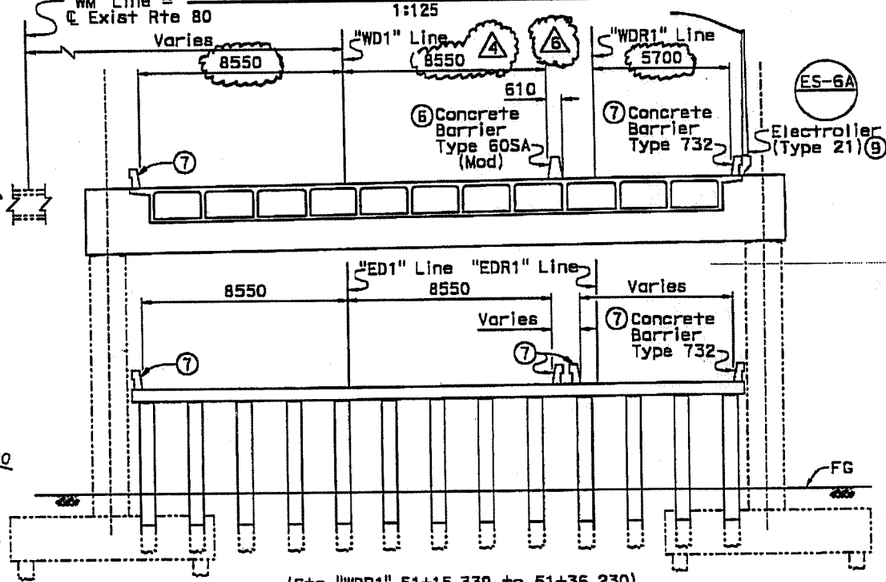

TYPICAL SECTION (FRAMES 2 & 3)
1:125

ALL DIMENSIONS ARE IN METERS UNLESS OTHERWISE SHOWN

ORIGINAL SCALE IN MILLIMETERS FOR REDUCED PLANS 0 10 20 30 40 50 60 70 80 90 100

DESIGN	BY C. M. Duan	CHECKED G.Schuster/M.Cullen	LOAD FACTOR DESIGN	LIVE LOADING: HS20-44 AND ALTERNATIVE AND PERMIT DESIGN LOAD	
DETAILS	BY G. M. Souza/SJ/TC	CHECKED M.Cullen/G.Schuster	LAYOUT	BY C. M. Duan	CHECKED M. J. Cullen
QUANTITIES	BY C. M. Duan	CHECKED M. J. Cullen	SPECIFICATIONS	BY S. Margaris	PLANS AND SPECS COMPARED S. Margaris

DESIGN ENGINEER

STATE OF CALIFORNIA
DEPARTMENT OF TRANSPORTATION

DIVISION OF ENGINEERING SERVICES
STRUCTURE DESIGN
DESIGN BRANCH 5

BRIDGE NO. 34-0006
KILOMETER POST 12.6

CU 04251
EA 0120P1

DISREGARD PRINTS BEARING EARLIER REVISION DATES

FILE => 34-0006-a-gp_r4.dgn

WEST TIE IN PHASE 2
SOUTH - SOUTH DETOUR
GENERAL PLAN

REVISION DATES										SHEET	OF
01-15-07	07-25-08	02-01-08	02-15-08	07-24-08	08-11-08	07-24-08	02-03-09		01-31-08	1R4	64

STRUCTURES DESIGN GENERAL PLAN SHEET (METRIC) (REV.07-24-08)

USERNAME => dbolzo DATE PLOTTED => 03-FEB-2009 TIME PLOTTED => 13:42

GENERAL NOTES
LOAD FACTOR DESIGN

DESIGN:
CALTRANS BRIDGE DESIGN SPECIFICATIONS
APRIL 2000 (LFD)
(1996 AASHTO with Interims and Revisions by CALTRANS)

SEISMIC DESIGN:
Caltrans Seismic Design Criteria
(Version 1.3 February 2004) and YBI Structures
Design Criteria (April 1 2002)

LIVE LOADING:
HS20-44 and alternative and permit design load.

SEISMIC LOADING:
Structure during West Tie-In Phases -
Design Evaluation Earthquake.
Also see "Design Criteria No. 1" thru "Design
Criteria No. 10" sheets of contract plans.

REINFORCED CONCRETE:
f_y = 420 MPa
f'_c = 25 MPa
n = 9

TRANSVERSE DECK SLABS
(Working Stress Design):
f_s = 140 MPa
f_c = 8 MPa
n = 10

PRESTRESSED CONCRETE
See Prestress Notes on each individual
Bent Layout sheet and "Footing Details No. 4" sheet.

STRUCTURAL STEEL:
X STRONG PIPE, XX STRONG PIPE AND BEARING PLATE
AASHTO M270M, GRADE 250
(ASTM A709M, GRADE 250)
f_y = 250 Mpa.

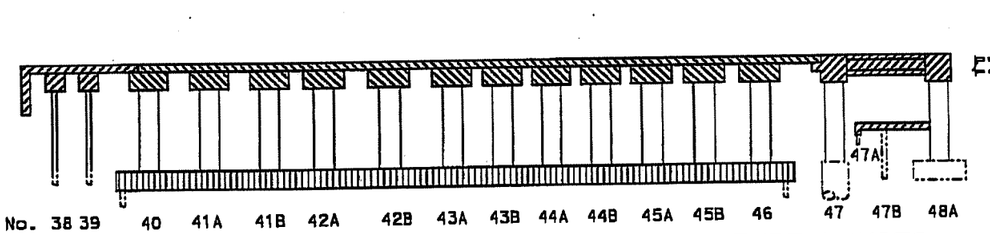

CONCRETE STRENGTH AND TYPE LIMITS
no scale

- STRUCTURAL CONCRETE BRIDGE FOOTINGS: f'c = 25 MPa @ 28 DAYS
- STRUCTURAL CONCRETE BRIDGE COLUMNS AND ABUTMENTS: f'c = 25 MPa @ 28 DAYS
- STRUCTURAL CONCRETE BRIDGE SUPERSTRUCTURE BETWEEN BENTS 38 & 40 AND BETWEEN BENTS 47 & 48: f'c = 28 MPa @ 28 DAYS
- STRUCTURAL CONCRETE BRIDGE SUPERSTRUCTURE BETWEEN BENTS 40 & 47: f'c = 45 MPa @ 28 DAYS
- STRUCTURAL CONCRETE HIGH EARLY STRENGTH, YBI VIADUCT SOUTH EDGE BEAM CORBEL f'c = 14 MPa IN 3 HOURS and f'c = 35 MPa @ 28 Days

NOTE:
THE CONTRACTOR SHALL VERIFY ALL
CONTROLLING FIELD DIMENSIONS
BEFORE ORDERING OR FABRICATING
ANY MATERIAL.

ARS CURVE
no scale

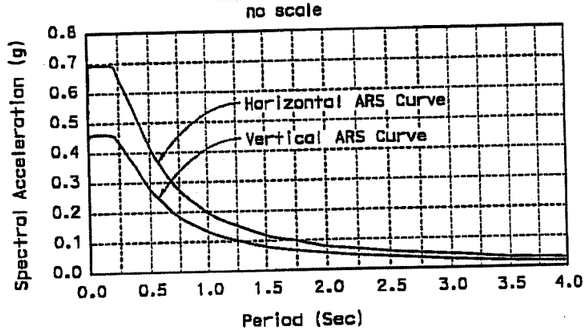

DESIGN EVALUATION EARTHQUAKE (DEE)

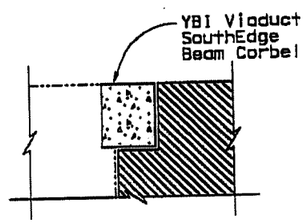

DETAIL A
no scale

LEGEND:
-------- Indicates Existing Structure

MARK	DATE	REVISION(S) DESCRIPTIONS	DES	CHK	DET
1	02-03-09	Revise Hinge Corbel concrete	CD	MC	TC

REGISTERED CIVIL ENGINEER: DATE:

M.J. Cullen 02-03-09
REGISTERED CIVIL ENGINEER DATE

PLANS APPROVAL DATE

The State of California or its officers or agents shall not be responsible for the accuracy or completeness of electronic copies of this plan sheet.

REGISTERED PROFESSIONAL ENGINEER M. J. CULLEN No. C 40620 Exp. 03-31-09 CIVIL STATE OF CALIFORNIA

CONTRACT CHANGE ORDER NO. 208
SHEET 7 OF 22

INDEX TO PLANS

1. GENERAL PLAN
2. GENERAL PLAN NOTES
3. INDEX TO PLANS
4. CONSTRUCTION STAGING PLAN NO. 1
5. CONSTRUCTION STAGING PLAN NO. 2
6. CONSTRUCTION DETAILS NO. 1
7. CONSTRUCTION DETAILS NO. 2
8. DECK CONTOURS - WESTBOUND
9. DECK CONTOURS - EASTBOUND
10. FOUNDATION PLAN
11. PILE DATA TABLES
12. BENT 47 PILE DETAILS
13. FOOTING DETAILS NO. 1
14. FOOTING DETAILS NO. 2
15. FOOTING DETAILS NO. 3
16. FOOTING DETAILS NO. 4
17. BENT 38 & 39 PLAN
18. BENT 38 &39 DETAILS
19. BENT 40 LAYOUT
20. BENT 41A LAYOUT
21. BENT 41B LAYOUT
22. BENT 42A LAYOUT
23. BENT 42B LAYOUT
24. BENT 43A LAYOUT
25. BENT 43B LAYOUT
26. BENT 44A LAYOUT
27. BENT 44B LAYOUT
28. BENT 45A LAYOUT
29. BENT 45B LAYOUT
30. BENT 46 LAYOUT
31. BENT 47 LAYOUT
32. ABUTMENT 47A LAYOUT
33. BENT 47B LAYOUT
34. BENT 48A LAYOUT
35. COLUMN DETAILS NO. 1
36. COLUMN DETAILS NO. 2
37. COLUMN MODIFICATIONS
38. BENT CAP DETAILS NO. 1
39. BENT CAP DETAILS NO. 2
40. BENT CAP DETAILS NO. 3
41. BENT CAP DETAILS NO. 4
42. BENT CAP DETAILS NO. 5
43. TYPICAL SECTION NO. 1
44. TYPICAL SECTION NO. 2
45. GIRDER LAYOUT - SPAN 47
46. SLAB REINFORCEMENT DETAILS NO. 1
47. SLAB REINFORCEMENT DETAILS NO. 2
48. SLAB REINFORCEMENT DETAILS NO. 3
49. BEARING PAD LAYOUT
50. EDGE BEAM DETAILS NO. 1
51. EDGE BEAM DETAILS NO. 2
52. EDGE BEAM DETAILS NO. 3
53. EDGE BEAM DETAILS NO. 4
54. RESTRAINER DETAILS
55. COLUMN REMOVAL DETAILS
56. DECK DRAINAGE LAYOUT
57. LUMINAIRE MOUNTING DETAILS
58. BARRIER RAIL TYPE 60SA (MOD)
59 LOG OF TEST BORING 1 OF 6
60 LOG OF TEST BORING 2 OF 6
61 LOG OF TEST BORING 3 OF 6
62 LOG OF TEST BORING 4 OF 6
63 LOG OF TEST BORING 5 OF 6
64 LOG OF TEST BORING 6 OF 6

Caltrans Metric

ALL DIMENSIONS ARE IN MILLIMETERS UNLESS OTHERWISE SHOWN

ORIGINAL SCALE IN MILLIMETERS FOR REDUCED PLANS 0 10 20 30 40 50 60 70 80 90 100

	BY	CHECKED
DESIGN	C. M. Duan	M. J. Cullen
DETAILS	G. M. Souza/S. Jiang	M. J. Cullen
QUANTITIES	C. M. Duan	M. J. Cullen

STATE OF CALIFORNIA
DEPARTMENT OF TRANSPORTATION

DIVISION OF ENGINEERING SERVICES
STRUCTURE DESIGN
DESIGN BRANCH 5

CU 04251
EA 0120P1
FILE => 34-0006-a-itp_r1.dgn

BRIDGE NO. 34-0006
KILOMETER POST 12.6

DISREGARD PRINTS BEARING EARLIER REVISION DATES

REVISION DATES

WEST TIE IN PHASE 2
SOUTH - SOUTH DETOUR
INDEX TO PLANS

SHEET 3R1 OF 64

STRUCTURES DESIGN DETAIL SHEET (METRIC) (REV.03-17-04)

USERNAME => GBOJZCO DATE PLOTTED => 03-FEB-2009 TIME PLOTTED => 12:55

04	SF	80	12.6/13.2

REGISTERED CIVIL ENGINEER 08-11-08 DATE

PLANS APPROVAL DATE

The State of California or its officers or agents shall not be responsible for the accuracy or completeness of electronic copies of this plan sheet.

REGISTERED PROFESSIONAL ENGINEER M. J. CULLEN No. C 40620 Exp. 03-31-09 CIVIL STATE OF CALIFORNIA

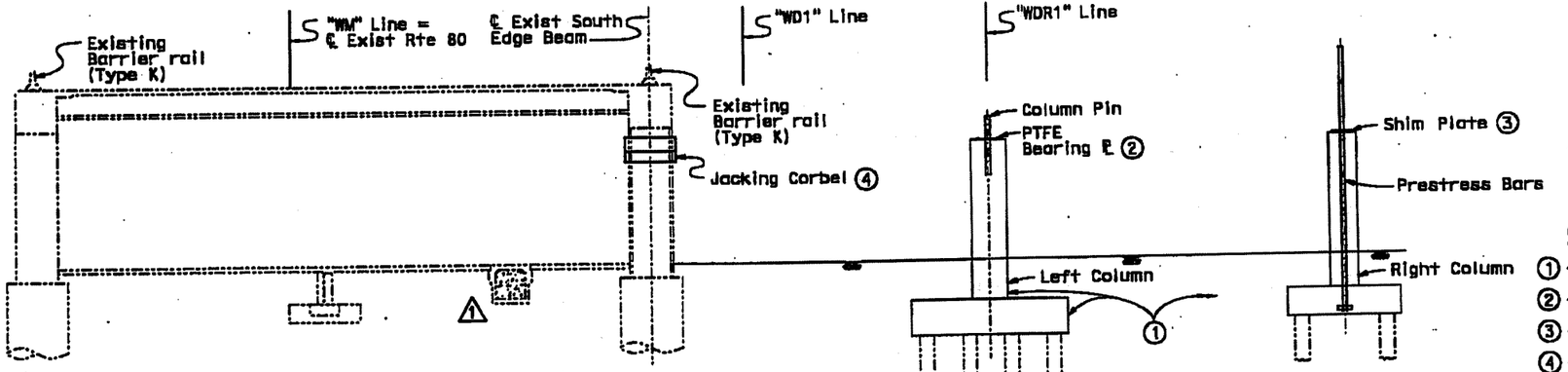

STAGE 1 SUBSTRUCTURE

no scale

STAGE 1: SUBSTRUCTURE

① - Construct Footings and Columns.

② - Place PTFE Bearing Plates on top of Left Column.

③ - Place Shim Plates on top of Right Column.

④ - Construct Jacking Corbels on Existing YBI Viaduct Columns 40, 41A, 41B and 42.

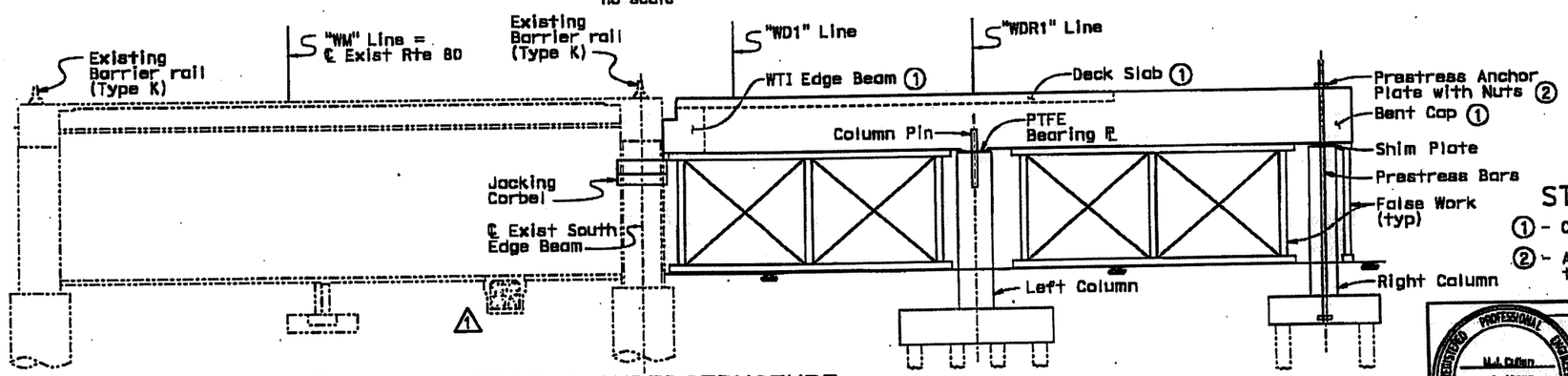

STAGE 2 SUPERSTRUCTURE

no scale

CONTRACT CHANGE ORDER NO. 208
SHEET 8 OF 22

STAGE 2: SUPERSTRUCTURE

① - Construct WTI Bent Caps, Deck Slabs and Edge Beam.

② - At right columns, place prestress anchor plates and tighten each nut to 425 N-m torque to remove slack.

REGISTERED PROFESSIONAL ENGINEER M.J. Cullen No. C 40620 Exp. 03-31-09 CIVIL STATE OF CALIFORNIA

MARK	DATE	REVISION(S) DESCRIPTIONS	DES	CHK	DET
△					
△					
△	08-11-08	Existing utility vault filled with conc	CD	MC	GS

REGISTERED CIVIL ENGINEER: DATE:

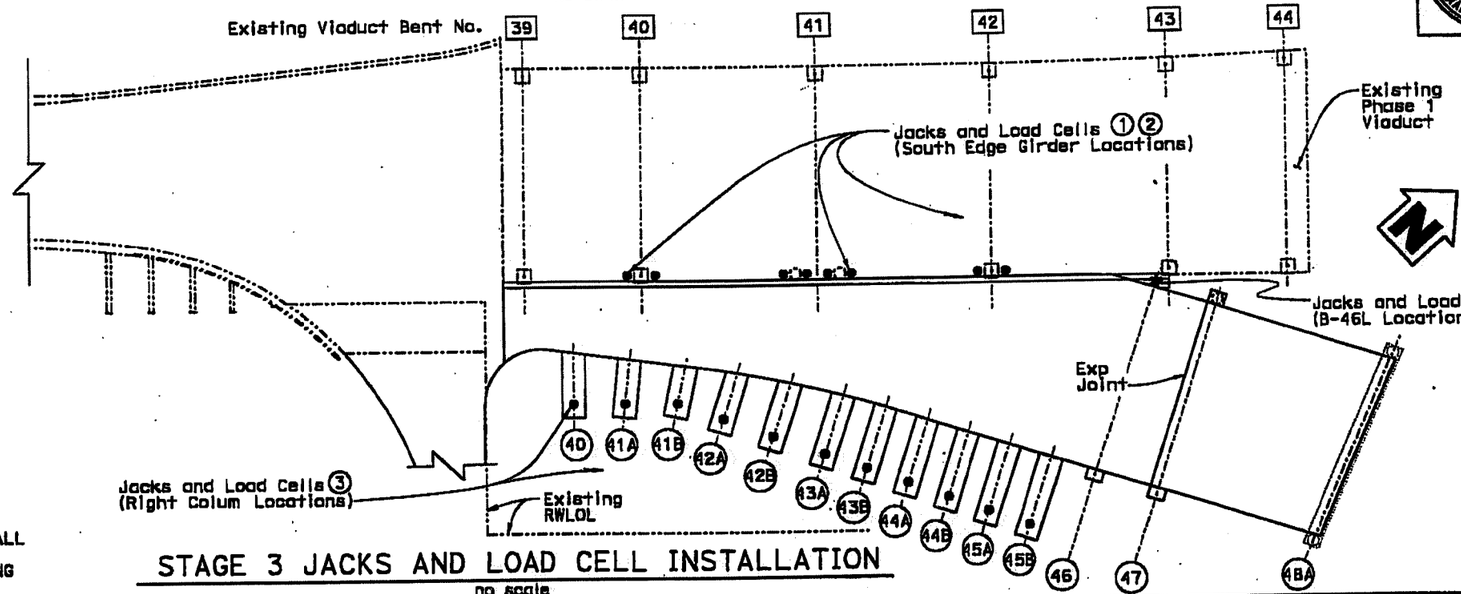

STAGE 3 JACKS AND LOAD CELL INSTALLATION

no scale

STAGE 3: JACKS AND LOAD CELL INSTALLATION

① - Install Jacks and Load Cells on Jacking Corbels at South Edge Beam locations.

② - Jack Up South Edge Beam in accordance with "Existing YBI Viaduct Jacking Plan" on "Construction Details No. 1" sheet. Install Shoring Towers.

③ - Install Jacks and Load Cells at WTI Right Column Locations. Jack 25 kN of Force onto Prestress Bars to remove Slack. Lock Jacks rigid. Retighten lower anchor nuts to 425 N-m torque. to reseat the anchor plates

④ - Install Jacks and Load Cells on Jacking Corbels on Column 46L at B-46L Location. Jack 25 kN of Force onto Jacking Corbels to adequatly seat the Jack. Lock Jacks rigid.

Note:

- Indicates location of Jacks and Load Cells

NOTE:
THE CONTRACTOR SHALL VERIFY ALL CONTROLLING FIELD DIMENSIONS BEFORE ORDERING OR FABRICATING ANY MATERIAL.

Caltrans Metric

ALL DIMENSIONS ARE IN MILLIMETERS UNLESS OTHERWISE SHOWN

	BY	CHECKED
DESIGN	C. M. Duan	M. J. Cullen
DETAILS	G. M. Souza	M. J. Cullen
QUANTITIES	C. M. Duan	M. J. Cullen

ORIGINAL SCALE IN MILLIMETERS FOR REDUCED PLANS 0 10 20 30 40 50 60 70 80 90 100

STATE OF CALIFORNIA
DEPARTMENT OF TRANSPORTATION

DIVISION OF ENGINEERING SERVICES
STRUCTURE DESIGN
DESIGN BRANCH 5

CU 04251
EA 0120P1

BRIDGE NO. 34-0006
KILOMETER POST 12.6

DISREGARD PRINTS BEARING EARLIER REVISION DATES

REVISION DATES

FILE => 34-0006-c-const_staging_plan01_r1.dgn

WEST TIE IN PHASE 2
SOUTH - SOUTH DETOUR
CONSTRUCTION STAGING PLAN NO. 1

SHEET 4R1 OF 64

STRUCTURES DESIGN DETAIL SHEET (METRIC) (REV.03-17-04)

USERNAME => gsouza DATE PLOTTED => 14-AUG-2008 TIME PLOTTED => 11:08

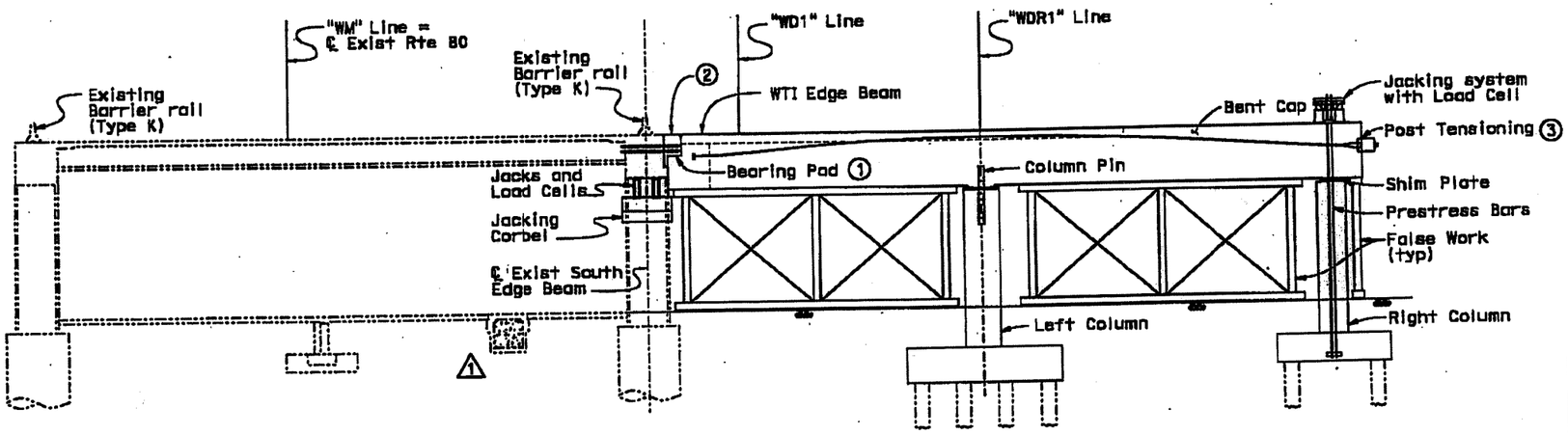

SEQUENCE 4 PRESTRESSING

no scale

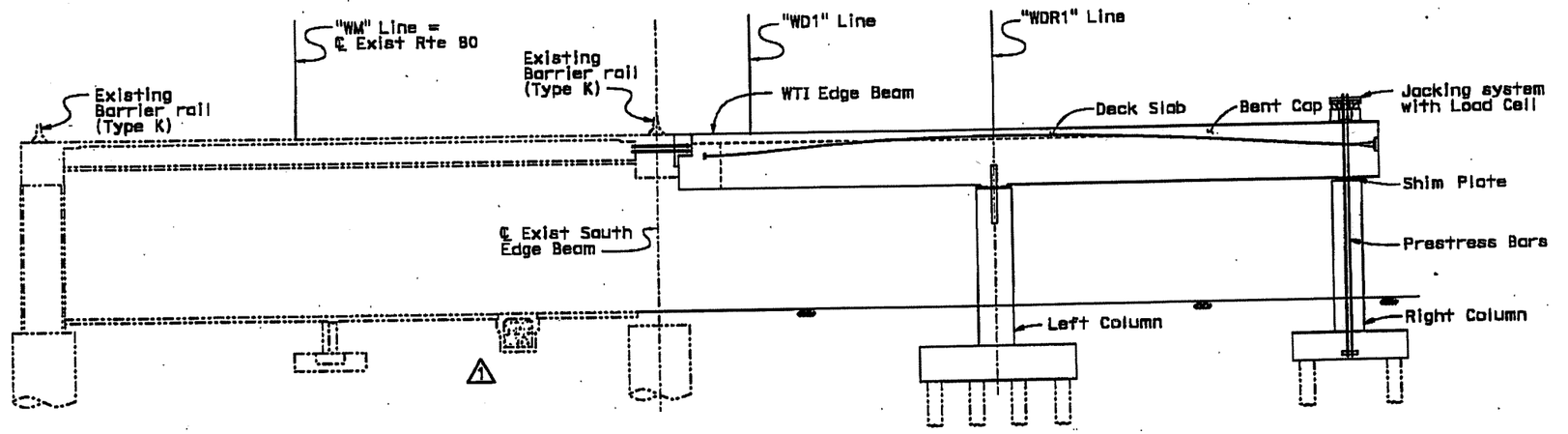

SEQUENCE 5 ADJUSTMENT

no scale

NOTE:
THE CONTRACTOR SHALL VERIFY ALL CONTROLLING FIELD DIMENSIONS BEFORE ORDERING OR FABRICATING ANY MATERIAL.

M. J. Cullen 08-11-08
REGISTERED CIVIL ENGINEER DATE

PLANS APPROVAL DATE

The State of California or its officers or agents shall not be responsible for the accuracy or completeness of electronic copies of this plan sheet.

REGISTERED PROFESSIONAL ENGINEER — M. J. CULLEN — No. C 40620 — Exp. 03-31-09 — CIVIL — STATE OF CALIFORNIA

STAGE 4: HINGE CORBEL CONSTRUCTION AND POST TENSIONING

① - Place Bearing Pads on WTI Edge Beam. If required adjust Grade of YBISEB as directed by the Engineer.

② - Construct South Edge Beam Hinge Corbel in accordance with "YBI Viaduct South Edge Beam Corbel Construction Plan" on "Construction Details No. 2" sheet. (Traffic Control Required)

③ - Perform Post-Tensioning of Bent Caps in accordance with "Post Tensioning Plan" on "Construction Details No. 2" sheet.

MARK	DATE	REVISION(S) DESCRIPTIONS	DES	CHK	DET
1	08-11-08	Existing utility vault filled with conc	CD	MC	GS

REGISTERED CIVIL ENGINEER: DATE:

CONTRACT CHANGE ORDER NO. 208
SHEET 9 OF 22

STAGE 5: BENT ADJUSTMENT

① - Remove Falsework.

② - Check Load Cell Readings. Check Edge Beam Grades. See "Load Transfer Assurance Plan" on "Construction Details No. 2" sheet.

③ - If required, Adjust Bents in accordance with "Bent Cap Adjustment Procedure" until Load Cell Readings and Edge Beam Grades are accepted by the Engineer. See "Column Details No. 2" sheet.

④ - Perform Final Post Tension Lock off of Right Column Prestress Bars. See "Column Details No. 2" sheet.

⑤ - Remove Existing Columns 40, 41A, 41B and 42 in YBI Viaduct Phase 1.

DESIGN	BY C. M. Duan	CHECKED M. J. Cullen	
DETAILS	BY G. M. Souza	CHECKED M. J. Cullen	
QUANTITIES	BY C. M. Duan	CHECKED M. J. Cullen	

STATE OF CALIFORNIA
DEPARTMENT OF TRANSPORTATION

DIVISION OF ENGINEERING SERVICES
STRUCTURE DESIGN
DESIGN BRANCH 5

CU 04251
EA 0120P1

BRIDGE NO. 34-0006
KILOMETER POST 12.6

Caltrans Metric

ALL DIMENSIONS ARE IN MILLIMETERS UNLESS OTHERWISE SHOWN

ORIGINAL SCALE IN MILLIMETERS FOR REDUCED PLANS 0 10 20 30 40 50 60 70 80 90 100

FILE => 34-0006-c-const_staging_plan02_r1.dgn

WEST TIE IN PHASE 2
SOUTH - SOUTH DETOUR
CONSTRUCTION STAGING PLAN NO. 2

DISREGARD PRINTS BEARING EARLIER REVISION DATES

REVISION DATES

SHEET 5R1 OF 64

STRUCTURES DESIGN DETAIL SHEET (METRIC) (REV.03-17-04)

USERNAME => qbouza DATE PLOTTED => 14-AUG-2008 TIME PLOTTED => 11:05

DIST	COUNTY	ROUTE	KILOMETER POST TOTAL PROJECT	SHEET No	TOTAL SHEETS
04	SF	80	12.6/13.2		

08-11-08
REGISTERED CIVIL ENGINEER DATE

PLANS APPROVAL DATE

The State of California or its officers or agents shall not be responsible for the accuracy or completeness of electronic copies of this plan sheet.

REGISTERED PROFESSIONAL ENGINEER — M. J. CULLEN — No. C 40620 — Exp. 03-31-09 — CIVIL — STATE OF CALIFORNIA

MARK	DATE	REVISION(S) DESCRIPTIONS	DES	CHK	DET
1	08-11-08	Existing utility vault filled with conc	CD	MC	GS

REGISTERED CIVIL ENGINEER: DATE:

CONTRACT CHANGE ORDER NO. 208
SHEET 10 OF 22

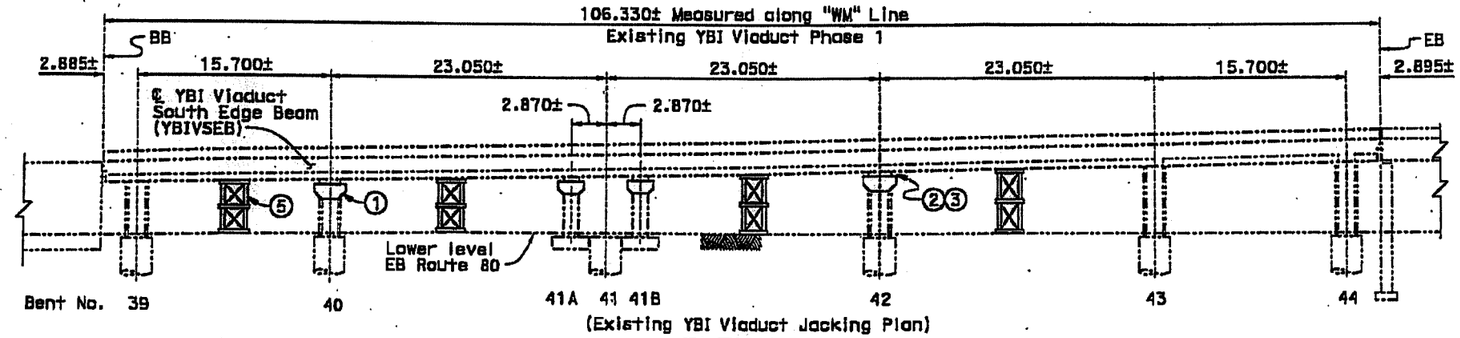

(Existing YBI Viaduct Jacking Plan)

ELEVATION
1:250

EXISTING YBI VIADUCT JACKING PLAN

Note:

Contractor shall submit a jacking and load monitoring plan to the Engineer for approval.

Jacking procedure shall be completed prior to construction of YBI Viaduct South Edge Beam Corbel and prior to post tensioning of WTI Bents 40 through 46.

① Construct Jacking Corbels, see "Column Modifications" sheet

② Place Jacks with load cells attached.

Each Jack shall be equipped with a Load Cell.

Load Cells shall be supplied by the Contractor and approved by Caltrans.

Load Cells shall be capable of continuously reporting loadings for the period the Jacks are in place.

Jacks shall be capable of being locked off and remain rigid (after desired load transfer has been accomplished) for the duration of the period they are in place. Jacks shall be approved by Caltrans.

③ Jacking Procedure, see "Jacking Load Table" for estimated dead load reactions at each jacking location

A) Bent 40

Jack YBI Viaduct South Edge Beam (YBIVSEB) until a 5 mm separation between YBIVSEB and Bearing Pads at Bent 40 has been achieved.

Assuming four Jacks per Column will be used;

Loads shall be applied in 400 kN intervals and the loads in each Jack shall never differ by more than 400 kN.

When the 5 mm separation has been achieved, the loadings in all four Jacks shall be similar within 5%. When the 5 mm separation and the balance loading has been achieved the Jacks shall be locked rigid.

B) Bent 42

Repeat jacking procedure as outlined for Bent 40.

C) Bent 41A and 41B

Bents 41A and 41B shall be jacked simultaneously.
Repeat jacking procedure as outlined for Bent 40 with the following differences:

Loads shall be applied in 200 kN intervals and the loads in each Jack shall never differ by more than 200 kN.

④ After all Jacks have been locked rigid, Load Cells and YBIVSEB profile shall be monitored daily to assure Jacks remain rigid and profile remains consistent. Adjustment of Jacks may be required to mitigate settlement or loss of hydraulic pressure as directed by the Engineer.

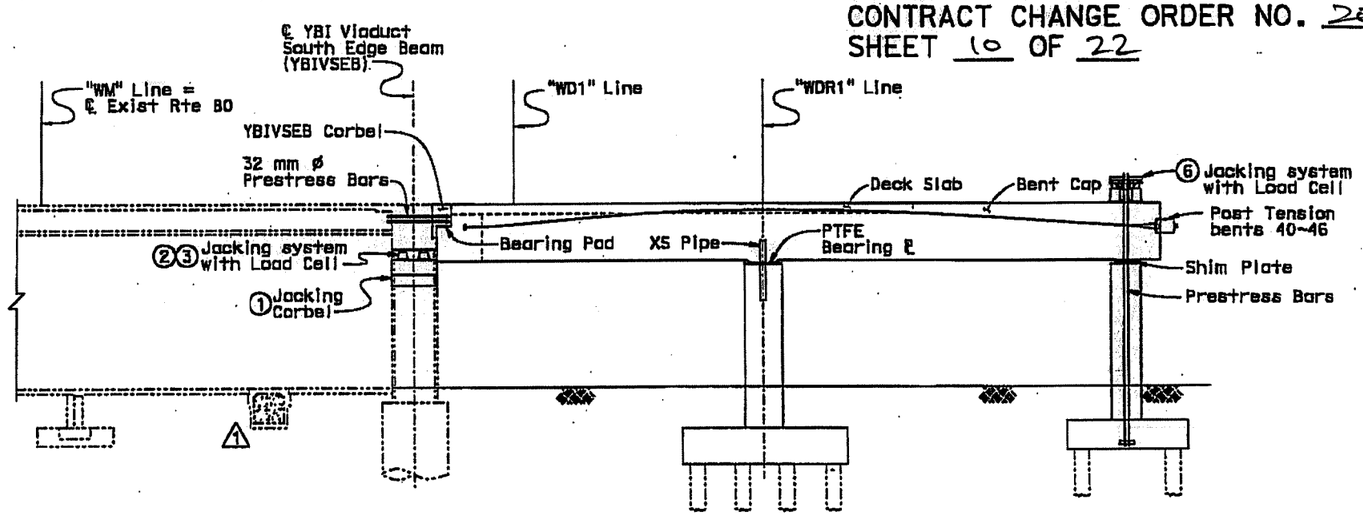

TYPICAL SECTION
no scale

⑤ Place Shoring Towers under YBIVSEB at midspan in spans shown on diagram.

Preload Shoring Tower as directed in Structure Specifications.

Place Shim Plates between Shoring Towers and YBIVSEB and shim tight. Remove Jacks on Shoring Towers.

Shoring Towers shall be designed to carry 450 kN loading with no more than 3 mm of deflection.

The Shoring Tower load capacity shall be greater than 1320 kN.

⑥ Place Jacks with Load Cells at WTI Right Column locations.
Jack 25 kN of force onto Prestress Bars to remove slack.
Lock Jacks rigid.
Retighten lower anchor nuts to 425 N-m of torque to reseat the anchor plates.

⑦ Place Jacks with Load Cells at Bent 46 Left Column Jacking Corbel.
Jack to 25 kN of force on Jacking Corbels.
Lock Jacks rigid.

JACKING LOAD TABLE	
YBI VIADUCT BENT	⊛ DEAD LOAD REACTION (kN)
40	4800
41A	2700
41B	2700
42	5400

⊛ Dead Load Reported is unfactored. Live Loads can be assumed to be as high as 40% of the Dead Load Reaction.

NOTE:
THE CONTRACTOR SHALL VERIFY ALL CONTROLLING FIELD DIMENSIONS BEFORE ORDERING OR FABRICATING ANY MATERIAL.

	BY	CHECKED
DESIGN	M. J. Cullen	C. M. Duon
DETAILS	C. M. Souza	C. M. Duon
QUANTITIES	C. M. Duon	M. J. Cullen

STATE OF CALIFORNIA
DEPARTMENT OF TRANSPORTATION

DIVISION OF ENGINEERING SERVICES
STRUCTURE DESIGN
DESIGN BRANCH 5

BRIDGE NO. 34-0006
KILOMETER POST 12.6

CU 04251
EA 0120P1

WEST TIE IN PHASE 2
SOUTH - SOUTH DETOUR
CONSTRUCTION DETAILS NO. 1

Caltrans Metric

ALL DIMENSIONS ARE IN MILLIMETERS UNLESS OTHERWISE SHOWN

ORIGINAL SCALE IN MILLIMETERS FOR REDUCED PLANS 0 10 20 30 40 50 60 70 80 90 100

DISREGARD PRINTS BEARING EARLIER REVISION DATES

REVISION DATES: 07-25-08 | 07-31-08 | 07-31-08 | 08-11-08

SHEET 6R1 OF 64

[FILE =]:34-0006-c-const-details01_r1.dgn

STRUCTURES DESIGN DETAIL SHEET (METRIC) (REV.03-17-04)

USERNAME =]: dbruzzi DATE PLOTTED =]: 14-AUG-2008 TIME PLOTTED =]: 11:10

MARK	DATE	REVISION(S) DESCRIPTIONS	DES	CHK	DET
1	08-11-08	Existing utility vault filled with conc	CD	MC	GS

REGISTERED CIVIL ENGINEER: DATE:

M. J. Cullen No. C 49620 Exp. 03-31-09 CIVIL STATE OF CALIFORNIA

CONTRACT CHANGE ORDER NO. 208
SHEET 11 OF 22

YBIVSEB TARGET LOADS	
LOAD CELL LOCATION	TARGET COMPRESSION LOAD (kN)
YBI Bent 40R	0
YBI Bent 41A	0
YBI Bent 41B	0
YBI Bent 42R	0

Note:

Target Loads indicate the total expected Dead Load Reaction at a particular location after post tensioning of Frame 1 has been completed.

04	5F	80	12.6/13.2		

08-11-08
REGISTERED CIVIL ENGINEER DATE

PLANS APPROVAL DATE

The State of California or its officers or agents shall not be responsible for the accuracy or completeness of electronic copies of this plan sheet.

M. J. CULLEN No. C 49620 Exp. 03-31-09 CIVIL STATE OF CALIFORNIA

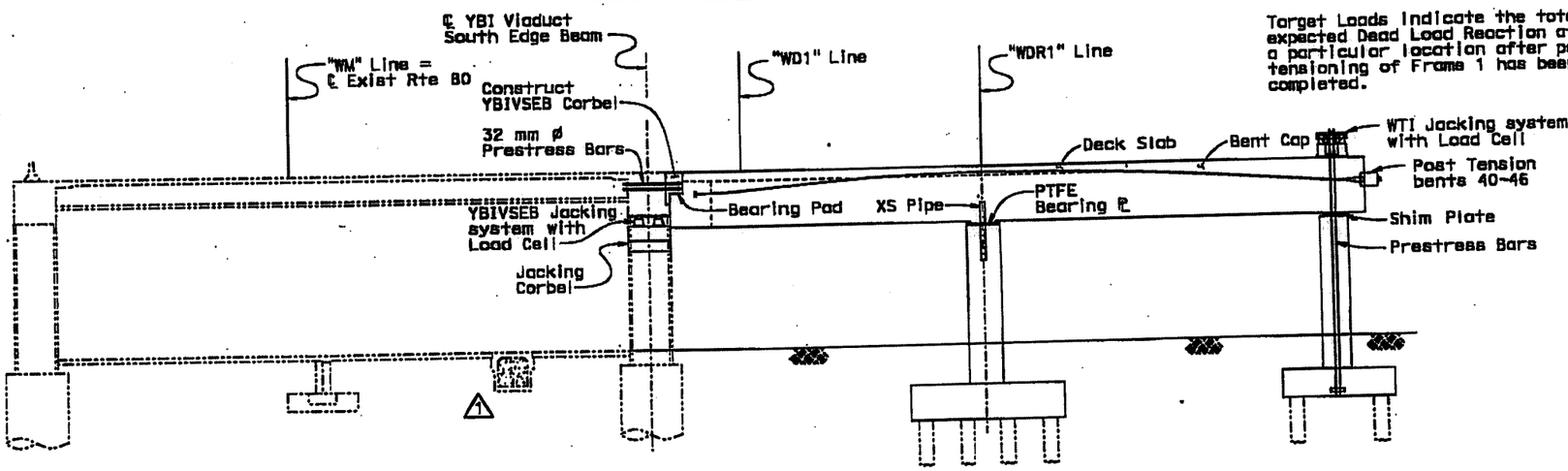

TYPICAL SECTION
no scale

TARGET LOADS		
LOAD CELL LOCATION	TARGET LOAD (kN)	Kips
WTI Bent 40R	450	
WTI Bent 41AR	950	
WTI Bent 41BR	730	
WTI Bent 42AR	860	
WTI Bent 42BR	660	
WTI Bent 43AR	860	
WTI Bent 43BR	790	
WTI Bent 44AR	1230	
WTI Bent 44BR	1340	
WTI Bent 45AR	1100	
WTI Bent 45BR	790	
WTI Bent 46L	2250	

Note:

Target Loads indicate the total expected Dead Load Reaction at a particular location after post tensioning of Frame 1 has been completed.

YBI VIADUCT SOUTH EDGE BEAM CORBEL CONSTRUCTION PLAN

Note:

See "Edge Beam Details" sheets

1. Place Bearing Pads, Hinge Reinforcing and Prestress Bars.
2. Concrete Placement Plan
   - A) Begin Traffic Control. Shift Westbound traffic to two north most lanes. (8 hour Traffic Control)
   - B) Place concrete for hinge Corbel, concrete shall be high early strength mix that is capable of achieving an f'_{ci}= 28 MPa or greater in three hours.
   - C) Let Hinge concrete set for one hour.
3. Remove slack from 32 mm ø Prestress Bars in Hinge Corbel. Tighten all Prestress Anchor Nuts to 300 N-m torque.
4. The Traffic Control may be lifted when all Prestress Anchor Nuts have been tightened and the concrete has been in place for at least three hours.
5. Post tension and grout all 32 mm ø Prestress Bars in Hinge Corbel.

POST TENSIONING PLAN (WTI BENT 40 THROUGH BENT 46)

Note:

See "Bent Layout" sheets.

WTI Bents shall be Post Tensioned by the following sequence:

1. Post Tension Bents 40 through 46 and Beam Footing 46L to 20% Pjack
2. Post Tension Bents 40 through 46 and Beam Footing 46L to 40% Pjack
3. Post Tension Bents 40 through 46 and Beam Footing 46L to 60% Pjack
4. Post Tension Bents 40 through 46 and Beam Footing 46L to 80% Pjack
5. Post Tension Bents 40 through 46 and Beam Footing 46L to 100% Pjack
6. Simultaneous Post tensioning of Bents is permissible within each sequence. After each sequence of post tensioning approval of the Engineer is required before proceeding to the next sequence.
7. Grout all Prestress Tendons
8. Remove all Falsework and Shoring Towers

LOAD TRANSFER ASSURANCE PLAN

1. Check Load Cells at all locations.
   - A) Compare load cell Data to target loads at each load cell location, see "Target Loads" Tables
   - B) If Load Cell readings indicate that loads are within 10% of target loads at the WTI locations and the loads on the YBIVSEB Jacks have been reduced by 90% then release and remove all YBIVSEB Jacks. Monitor the profile of YBIVSEB.
   - C) If target loads have not been achieved or if the profile of YBIVSEB is not within tolerance then adjustment of the affected WTI Bents as directed by the Engineer will be required. For bent adjustment details see "Column Details No. 2" sheet
2. Once load transfers have been achieved and accepted by the Engineer, the Load Cells and YBIVSEB shall be monitored for a period of 60 days.
3. If Load Cells and YBIVSEB indicate adequate stability after 60 day period the Contractor may proceed with the "Final Post Tensioning Procedure" of the Prestress Bars in the WTI Right Columns by adding 600 kN additional jacking force on each Tension Column, see "Column Details No. 2" sheet.
4. Grout Prestress Bars
5. Remove YBI Columns at Bents 40, 41A, 41B and 42.

NOTE:
THE CONTRACTOR SHALL VERIFY ALL CONTROLLING FIELD DIMENSIONS BEFORE ORDERING OR FABRICATING ANY MATERIAL.

	BY	CHECKED
DESIGN	M. J. Cullen	C. M. Duan
DETAILS	G. M. Souza	C. M. Duan
QUANTITIES	C. M. Duan	M. J. Cullen

STATE OF CALIFORNIA
DEPARTMENT OF TRANSPORTATION

DIVISION OF ENGINEERING SERVICES
STRUCTURE DESIGN
DESIGN BRANCH 5

BRIDGE NO. 34-0006
KILOMETER POST 12.6

CU 04251
EA 0120P1

DISREGARD PRINTS BEARING EARLIER REVISION DATES →

FILE => 34-0006-c-const-details02_r1.dgn

ORIGINAL SCALE IN MILLIMETERS FOR REDUCED PLANS 0 10 20 30 40 50 60 70 80 90 100

ALL DIMENSIONS ARE IN MILLIMETERS UNLESS OTHERWISE SHOWN

Caltrans Metric

WEST TIE IN PHASE 2
SOUTH - SOUTH DETOUR
CONSTRUCTION DETAILS NO. 2

REVISION DATES: 07-31-08 | 08-04-08 | 08-07-08 | 08-11-08

SHEET 7R1 OF 64

STRUCTURES DESIGN DETAIL SHEET (METRIC) (REV.03-17-04)

DATE PLOTTED => 14-AUG-2008 TIME PLOTTED => 11:11
USERNAME => dgouzes

04	SF	80	12.6/13.2		

08-11-08
REGISTERED CIVIL ENGINEER DATE

PLANS APPROVAL DATE

The State of California or its officers or agents shall not be responsible for the accuracy or completeness of electronic copies of this plan sheet.

REGISTERED PROFESSIONAL ENGINEER
M. J. CULLEN
No. C 40820
Exp. 03-31-09
CIVIL
STATE OF CALIFORNIA

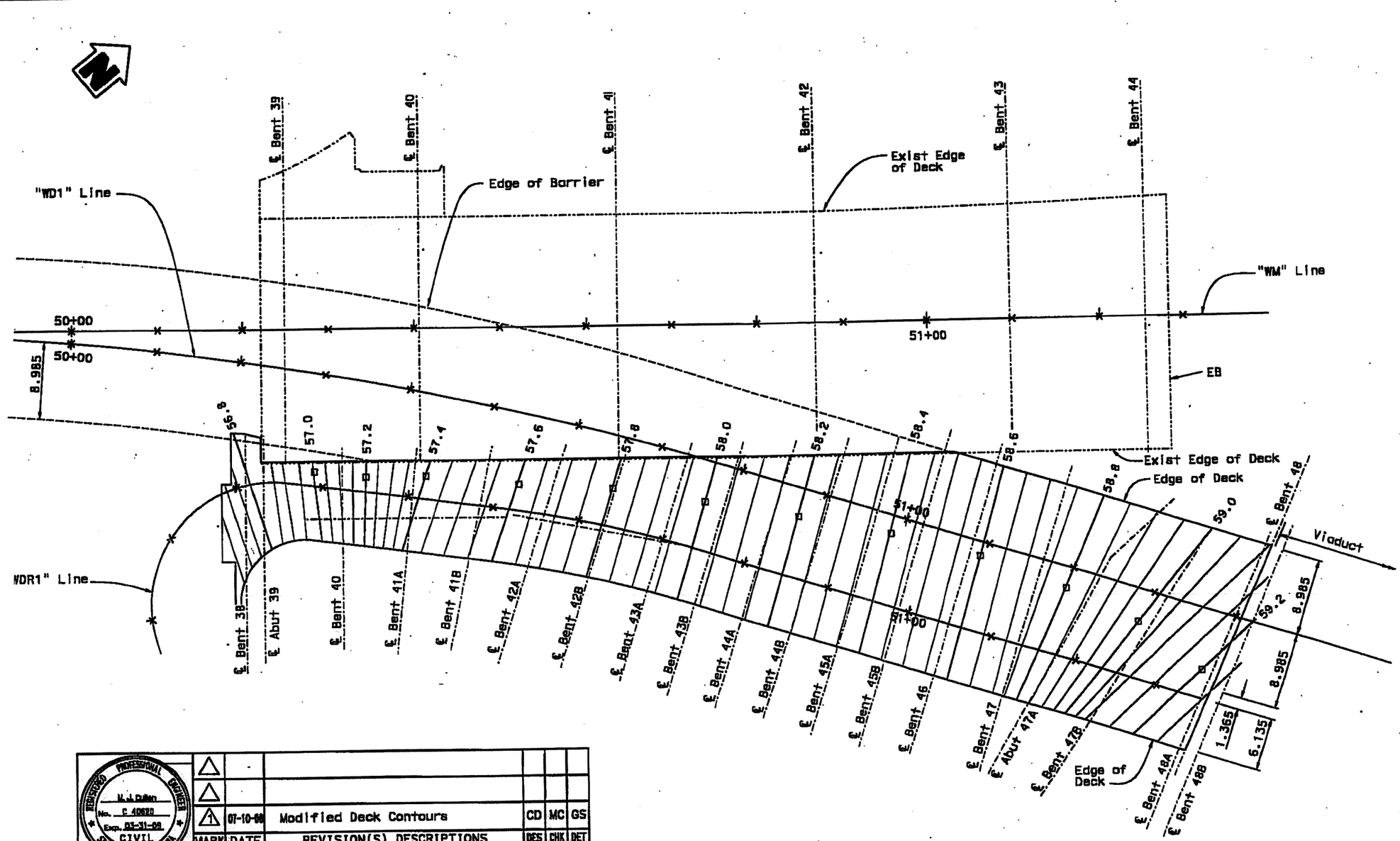

PLAN
1:250

MARK	DATE	REVISION(S) DESCRIPTIONS	DES	CHK	DET
1	07-10-08	Modified Deck Contours	CD	MC	GS

REGISTERED CIVIL ENGINEER: DATE:

CONTRACT CHANGE ORDER NO. 208
SHEET 12 OF 22

LENGEND:
- □ - Indicates 200 mm contours
- × = 10 m intervals along station line
- Contours do not include camber
- Contour Interval = 50 mm

NOTE:
THE CONTRACTOR SHALL VERIFY ALL CONTROLLING FIELD DIMENSIONS BEFORE ORDERING OR FABRICATING ANY MATERIAL.

Caltrans Metric

ALL DIMENSIONS ARE IN MILLIMETERS UNLESS OTHERWISE SHOWN

ORIGINAL SCALE IN MILLIMETERS FOR MEASURED PLANS 0 10 20 30 40 50 60 70 80 90 100

	BY	CHECKED
DESIGN	C. M. Duon	M. J. Cullen
DETAILS	G. M. Souza	M. J. Cullen
QUANTITIES	C. M. Duon	M. J. Cullen

STATE OF CALIFORNIA
DEPARTMENT OF TRANSPORTATION

DIVISION OF ENGINEERING SERVICES
STRUCTURE DESIGN
DESIGN BRANCH 5

CU 04251
EA 0120F1
FILE => 34-0006-d-deck-con_wb-r1.dgn

BRIDGE NO. 34-0006
KILOMETER POST 12.6
DISREGARD PRINTS BEARING EARLIER REVISION DATES

WEST TIE IN PHASE 2
SOUTH - SOUTH DETOUR
DECK CONTOURS-WESTBOUND

REVISION DATES | SHEET BR1 | OF 64

STRUCTURES DESIGN DETAIL SHEET (METRIC) (REV.03-17-04)

USERNAME => dbouza DATE PLOTTED => 14-AUG-2008 TIME PLOTTED => 07:58

04	SF	80	12.6/13.2			

Caltrans Metric

M. J. Cullen 01-09-09
REGISTERED CIVIL ENGINEER DATE

PLANS APPROVAL DATE

The State of California or its officers or agents shall not be responsible for the accuracy or completeness of electronic copies of this plan sheet.

REGISTERED PROFESSIONAL ENGINEER — M. J. CULLEN — No. C 40620 — Exp. 03-31-09 — CIVIL — STATE OF CALIFORNIA

MARK	DATE	REVISION(S) DESCRIPTIONS	DES	CHK	DET
1	01-09-09	-Change radius of "EDR1" Line	CD	MC	GS

REGISTERED CIVIL ENGINEER: DATE:

REGISTERED PROFESSIONAL ENGINEER — M. J. Cullen — No. C 40620 — Exp. 03-31-09 — CIVIL — STATE OF CALIFORNIA

CONTRACT CHANGE ORDER NO. 208
SHEET 13 OF 22

"WD1" Line
R1 = 370.000
Δ1 = 17°32'16"
T1 = 57.624
L1 = 114.330

"WDR1" Line
R = 79.400
Δ = 119°35'08"
T = 94.750
L = 165.730

"WDR1" Line
R = 149.400
Δ = 10°25'21"
T = 13.630
L = 27.177

"ED1" Line
R1 = 300.000
Δ1 = 17°42'17"
T1 = 46.723
L1 = 92.701

"EDR1" Line
R = 50.000
Δ = 30°53'49"
T = 13.818
L = 26.963

"EDR1" Line
R = 24.400
Δ = 90°14'13"
T = 24.501
L = 38.428

Existing Structure
Foundation Not Shown

TO SAN FRANCISCO

"WM" 49+67.137 POT
"WD1" 49+67.137 BC
"WM" Line
N41°31'00"E
EM 49+78.026 POT
"ED1" 49+78.026 BC

"ED1" Line
50+00
"WD1" Line
50+00
R=370

"WDR1" Line
R=14.4
50+00
"WDR1" 49+95.9844 BC

¢ 610 mm ø CIDH Pile
"WD1" 50+21.882
9.789 m Rt

610 mm ø CIDH pile spacing

6 @ 2.44 m

5 @ 1.83 m

¢ 610 mm ø CIDH Pile
"WD1" 50+24.473
12.490 m Rt

"WD1" 50+34.795
16.236 m Rt

"WD1" 50+42.873
14.717 m Rt

"WD1" 50+50.878
13.030 m Rt

"WD1" 50+58.497
11.639 m Rt

"WD1" 50+65.753
11.193 m Rt

"WD1" 50+72.990
10.608 m Rt

"WD1" 50+78.912
10.342 m Rt

"WD1" 50+84.733
10.350 m Rt

"WD1" 50+90.483
10.349 m Rt

"WD1" 50+96.233
10.349 m Rt

"WD1" 51+01.983
10.349 m Rt

"WD1" 51+08.143
9.749 m Lt
51+00

¢ Existing Pile
"WD1" 51+03.231
9.749 m Lt

¢ 2.13 m ø CIDH Pile
"WD1" 51+16.433
9.749 m Lt

¢ Existing CIDH Piles (Phase 1)

¢ 610 mm ø CIDH
"WD1" 51+27.288
8.035 m Lt

¢ Existing CIDH Piles (Phase 1)

Existing Structure
Foundation Not Shown
"WM" Line
N41°31'00"E

TO OAKLAND

47.900
48.675
47.800
48.400
47.600
48.400
47.800
48.400
47.800
47.100
47.800

¢ Bent 38 N48°29'00"W
¢ Bent 39 N48°29'00"W
¢ Bent 40 N48°29'00"W
¢ Bent 41A N42°25'00"W
¢ Bent 41B N36°29'00"W
¢ Bent 42A N30°46'44"W
¢ Bent 42B
¢ Bent 43A
¢ Bent 43B
¢ Bent 44A
¢ Bent 44B
¢ Bent 45A
¢ Bent 45B N36°46'44"W
¢ Bent 46 N30°46'44"W
¢ Bent 47 N30°46'44"W
¢ Bent 48 N30°46'44"W (See other contract)
¢ About 47A N18°04'46"W
¢ Bent 47B N18°04'46"W
¢ Bent 48A N24°32'52"W
¢ Bent 48B N24°32'52"W

Ftg No. 1 LOL N41°31'00"E
Ftg No. 2 LOL N52°35'45"E R=149.4
Ftg No. 3 LOL N39°19'15"E
Ftg No. 4 LOL
Ftg No. 5 LOL N41°31'00"E
Ftg No. 6 LOL N81°30'11"E
Ftg No. 7 LOL
Ftg No. 8 LOL

"WD1" 50+43.890
24.295 m Rt

"WD1" 50+51.054
22.814 m Rt

"WD1" 50+57.708
23.522 m Rt

"WD1" 50+65.163
24.180 m Rt

"WD1" 50+72.644
24.696 m Rt

"WD1" 50+78.803
25.015 m Rt

"WD1" 50+84.733
25.253 m Rt

"WD1" 50+90.483
25.482 m Rt

"WD1" 50+96.233
25.711 m Rt

"WD1" 51+01.983
25.940 m Rt

"WD1" 50+36.665
25.644 m Rt

Existing "RWLOL" (Phase 1)
N41°31'00"E

Angle Pt
"WM" 50+19.630
49.000 m Rt
(Phase 1)

End Ret Wall
"WM" 50+70.00
49.000 m Rt
(Phase 1)

¢ 2.13 m ø CIDH Pile
"WD1" 51+16.433
10.350 m Rt

"EDR1" Line
R=50

R=24.40

"WD1" 51+42.000
N59°13'16"E

"WD1" 51+40.581

"WD1" 51+39.887
N59°13'16"E

18.282

9.764

2 @ 3.30

5 @ 3.30

Notes:

All offsets given are normal or radial to the specified station.

Indicates existing footings

Indicates location of columns

Indicates existing piles

NOTE:
THE CONTRACTOR SHALL VERIFY ALL CONTROLLING FIELD DIMENSIONS BEFORE ORDERING OR FABRICATING ANY MATERIAL.

ALL DIMENSIONS ARE IN METERS UNLESS OTHERWISE SHOWN

WEST TIE IN PHASE 2
SOUTH - SOUTH DETOUR
FOUNDATION PLAN

PRELIMINARY INVESTIGATION SECTION

SCALE 1:250	VERT.DATUM NGVD29	PHOTOGRAMMETRY AS OF:			
	HORZ.DATUM NAD83	SURVEYED BY		DRAFTED BY	
	ALIGNMENT TIES DIST./TRAVERSE SHEET	FIELD CHECKED BY		CHECKED BY	

DESIGN	BY C. N. Duan	CHECKED M. J. Cullen/G. Schuster
DETAILS	BY G. Souzzo/A. Chen	CHECKED M. J. Cullen
QUANTITIES	BY C. N. Duan	CHECKED M. J. Cullen

STATE OF CALIFORNIA
DEPARTMENT OF TRANSPORTATION
DIVISION OF STRUCTURES
STRUCTURE DESIGN 5

BRIDGE NO. 34-0006
KILOMETER POST 12.6

CU 04
EA 0120R1

DISREGARD PRINTS BEARING EARLIER REVISION DATES →
REVISION DATES (PRELIMINARY STAGE ONLY) 01-29-09

SHEET 10R1 OF 64

ORIGINAL SCALE IN MILLIMETERS FOR REDUCED PLANS 0 10 20 30 40 50 60 70 80 90 100

FILE => 34-0006-s_fpr1.dgn

STRUCTURES FOUNDATION PLAN SHEET (METRIC) (REV. 4/20/00)

USERNAME => gsouzzo DATE PLOTTED => 06-JAN-2009 TIME PLOTTED => 15:24

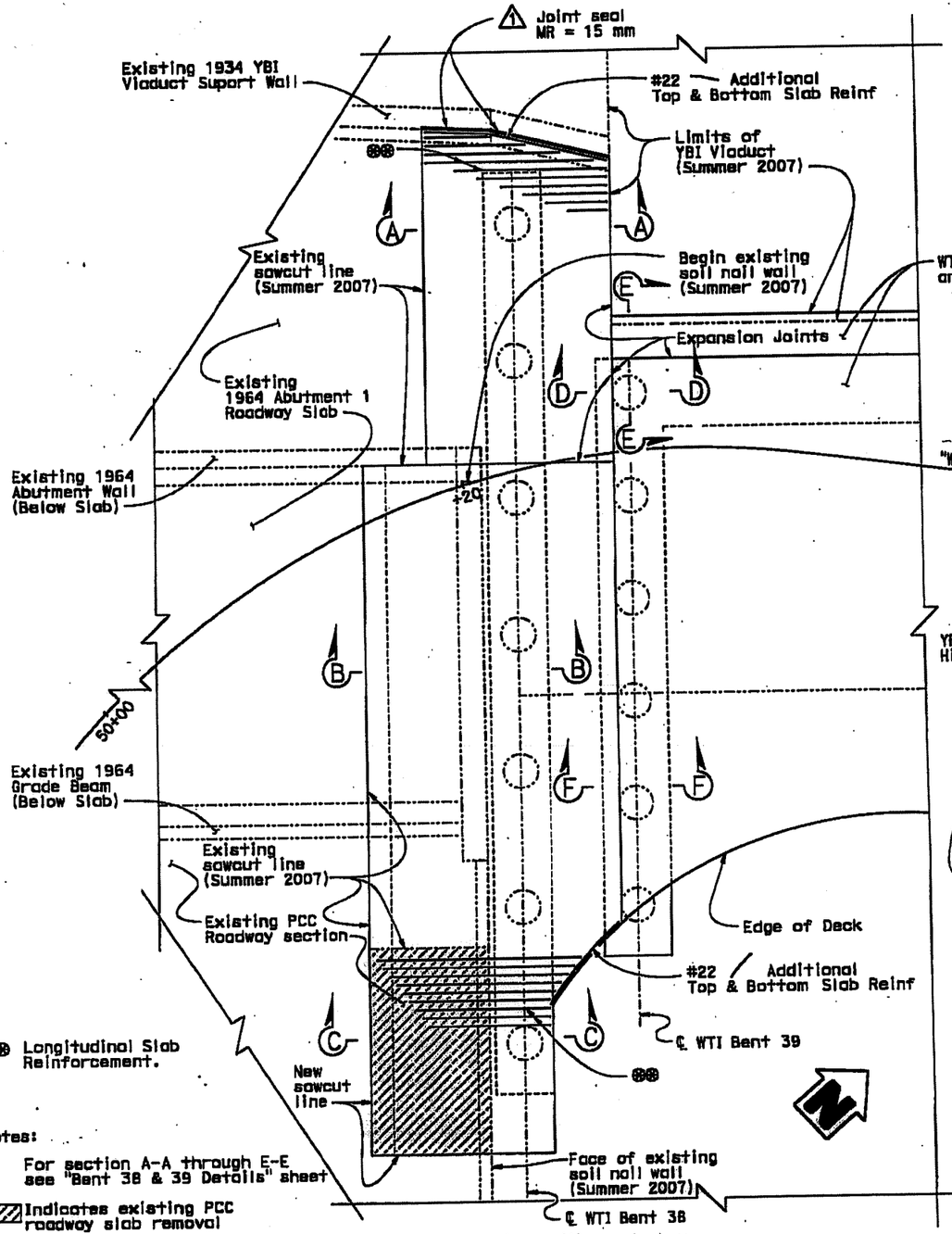

⊛⊛ Longitudinal Slab Reinforcement.

Notes:

For section A-A through E-E see "Bent 38 & 39 Details" sheet

Indicates existing PCC roadway slab removal

Note: Barrier Railing not shown

BENT 38 & 39 PLAN

1:50

NOTE:
THE CONTRACTOR SHALL VERIFY ALL CONTROLLING FIELD DIMENSIONS BEFORE ORDERING OR FABRICATING ANY MATERIAL.

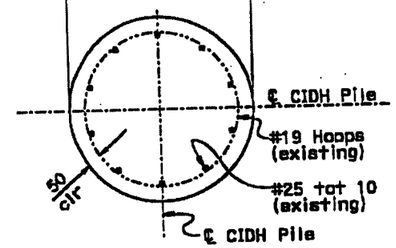

SECTION G-G

1:10

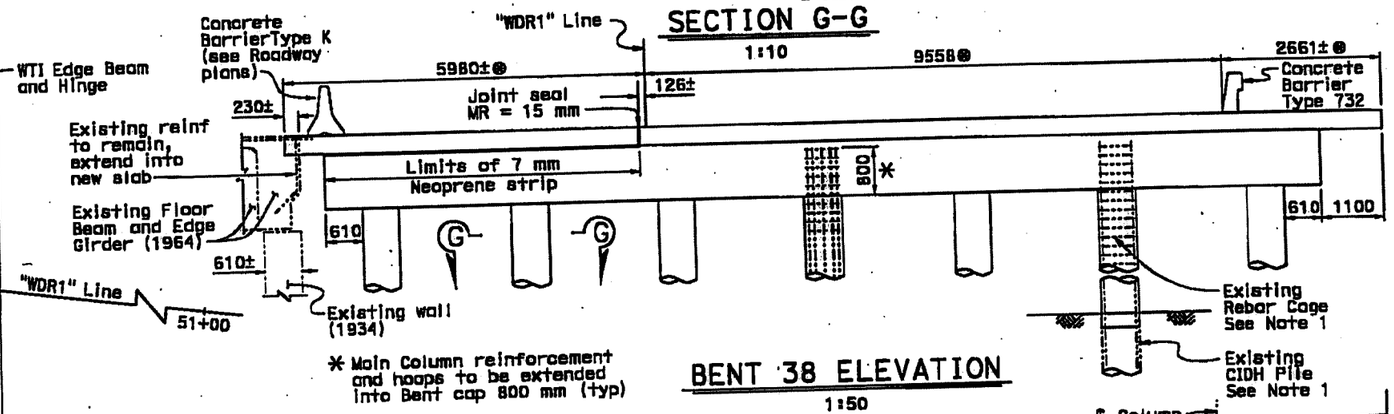

* Main Column reinforcement and hoops to be extended into Bent cap 800 mm (typ)

BENT 38 ELEVATION

1:50

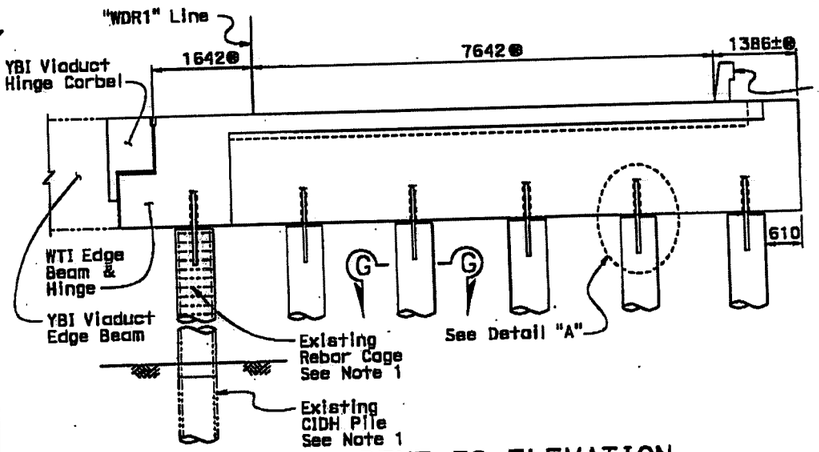

BENT 39 ELEVATION

1:50

Note 1:

All CIDH Piles were placed on a previous contract. See "West Tie In Phase 2 Foundation Submittal".

⊛ Indicates measurement along ℄ Bent.

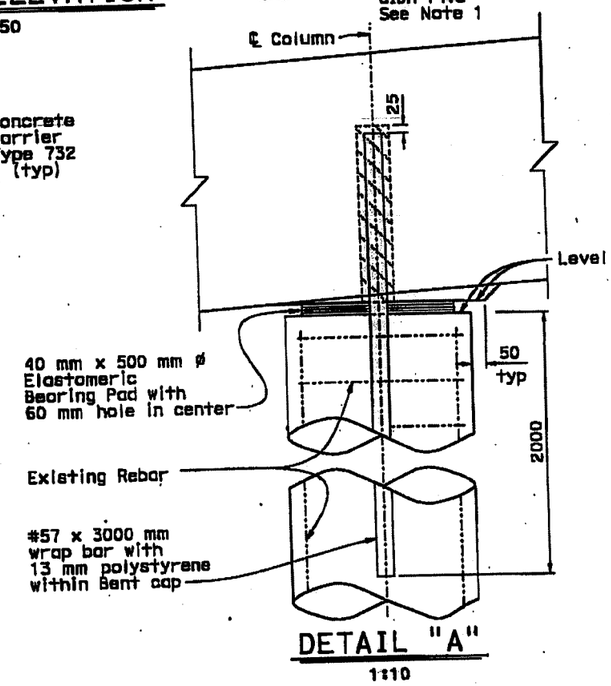

DETAIL "A"

1:10

REGISTERED CIVIL ENGINEER 08-11-08 DATE

PLANS APPROVAL DATE

The State of California or its officers or agents shall not be responsible for the accuracy or completeness of electronic copies of this plan sheet.

REGISTERED PROFESSIONAL ENGINEER M. J. CULLEN No. C 40620 Exp. 03-31-09 CIVIL STATE OF CALIFORNIA

MARK	DATE	REVISION(S) DESCRIPTIONS	DES	CHK	DET
1	07-09-08	Add Joint Seal MR = 15 mm			

REGISTERED CIVIL ENGINEER: DATE:

CONTRACT CHANGE ORDER NO. 208
SHEET 14 OF 22

WEST TIE IN PHASE 2
SOUTH - SOUTH DETOUR
BENT 38 & 39 PLAN

	BY	CHECKED
DESIGN	M. J. Cullen	C. M. Duan
DETAILS	G. M. Souza/S. Jiang	C. M. Duan
QUANTITIES	C. M. Duan	M. J. Cullen

STATE OF CALIFORNIA
DEPARTMENT OF TRANSPORTATION

DIVISION OF ENGINEERING SERVICES
STRUCTURE DESIGN
DESIGN BRANCH 5

BRIDGE NO. 34-0006
KILOMETER POST 12.6

CU 04251
EA 0120P1

SHEET 17R1 OF 64

ALL DIMENSIONS ARE IN MILLIMETERS UNLESS OTHERWISE SHOWN

ORIGINAL SCALE IN MILLIMETERS FOR REDUCED PLANS 0 10 20 30 40 50 60 70 80 90 100

FILE => 34-0006-q-bent38-39_plan_r1.dgn

DISREGARD PRINTS BEARING EARLIER REVISION DATES

STRUCTURES DESIGN DETAIL SHEET (METRIC) (REV.03-17-04)

USERNAME => cscuzo DATE PLOTTED => 13-AUG-2008 TIME PLOTTED => 16:43

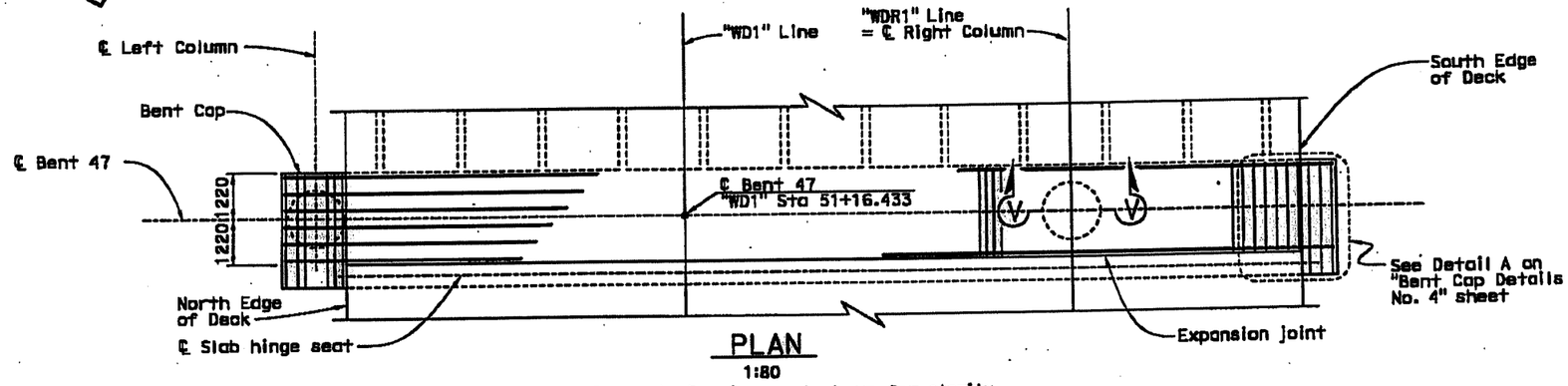

PLAN
1:80

Note: Concrete Barriers not shown for clarity

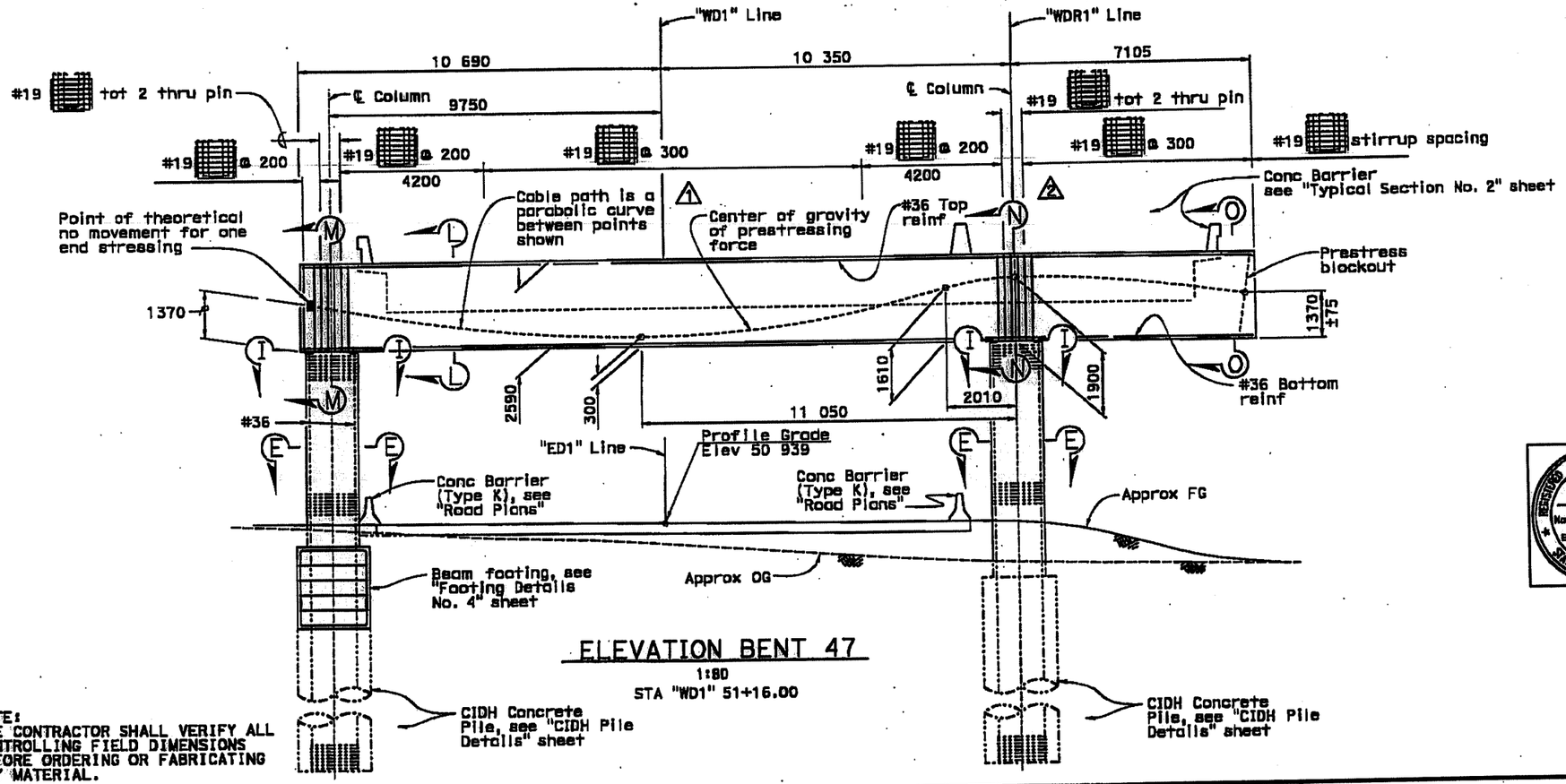

ELEVATION BENT 47
1:80
STA "WD1" 51+16.00

NOTE:
THE CONTRACTOR SHALL VERIFY ALL CONTROLLING FIELD DIMENSIONS BEFORE ORDERING OR FABRICATING ANY MATERIAL.

04	SF	80	12.6/13.2

08-11-08
REGISTERED CIVIL ENGINEER DATE

PLANS APPROVAL DATE

The State of California or its officers or agents shall not be responsible for the accuracy or completeness of electronic copies of this plan sheet.

REGISTERED PROFESSIONAL ENGINEER
M. J. CULLEN
No. C 40820
Exp. 03-31-09
CIVIL
STATE OF CALIFORNIA

BENT CAP PRESTRESSING NOTES

1860 MPa Low Relaxation Strand:

P_{jack} = 16 000 kN

Anchor Set = 10 mm

Friction Curvature Coefficient (μ) = 0.20
Friction Wobble Coefficient (K) = 6.6×10^{-7}/mm

Concrete: f'_c = 28.0 MPa @ 28 days
f'_{ci} = 25.0 MPa @ time of stressing

Contractor shall submit elongation calculations based on initial stress of
β = 0.700 times jacking stress.

One end stressing shall be performed from Southeast end.

Notes:

1. For Sections E-E & I-I, see "Column Details No. 1" sheet.
2. For Sections M-M, L-L, N-N, and O-O see "Bent Cap Details No. 4" sheet.
3. For Section V-V see "Bent Cap Details No. 2" sheet.

MARK	DATE	REVISION(S) DESCRIPTIONS	DES	CHK	DET
2	07-09-08	Eliminate Profile Grade at "WDR1" Line			
1	07-09-08	Eliminate Profile Grade at "WD1" Line			

REGISTERED CIVIL ENGINEER: DATE:

PROFESSIONAL ENGINEER M.J. Cullen No. C 40820 Exp. 03-31-09 CIVIL STATE OF CALIFORNIA

CONTRACT CHANGE ORDER NO. 208
SHEET 15 OF 22

DESIGN	BY C. M. Duan	CHECKED M. J. Cullen	
DETAILS	BY G. Souza/S. Jiang	CHECKED M. J. Cullen	
QUANTITIES	BY C. M. Duan	CHECKED M. J. Cullen	

STATE OF CALIFORNIA
DEPARTMENT OF TRANSPORTATION

DIVISION OF ENGINEERING SERVICES
STRUCTURE DESIGN
DESIGN BRANCH 5

CU 04251
EA 0120P1

BRIDGE NO. 34-0006
KILOMETER POST 12.6

WEST TIE IN PHASE 2
SOUTH - SOUTH DETOUR
BENT 47 LAYOUT

SHEET 31R1 OF 64

STRUCTURES DESIGN DETAIL SHEET (METRIC) (REV.03-17-04)

Caltrans Metric

ALL DIMENSIONS ARE IN MILLIMETERS UNLESS OTHERWISE SHOWN

ORIGINAL SCALE IN MILLIMETERS FOR REDUCED PLANS

FILE => 34-0006-h-b47_la_r1.dgn

USERNAME => dsouzes DATE PLOTTED => 13-AUG-2008 TIME PLOTTED => 18:43

MARK	DATE	REVISION(S) DESCRIPTIONS	DES	CHK	DET
2	07-09-08	Eliminate Profile Grade at "ED1" Line			
1	07-09-08	Eliminate Profile Grade at "EDR1" Line			

REGISTERED CIVIL ENGINEER: DATE:

M. J. Cullen No. C 40620 Exp. 03-31-09 CIVIL STATE OF CALIFORNIA

04	SF	88	12.6/13.2		

08-11-08
REGISTERED CIVIL ENGINEER DATE

PLANS APPROVAL DATE

The State of California or its officers or agents shall not be responsible for the accuracy or completeness of electronic copies of this plan sheet.

M. J. CULLEN No. C 40620 Exp. 03-31-09 CIVIL STATE OF CALIFORNIA

CONTRACT CHANGE ORDER NO. 208
SHEET 16 OF 22

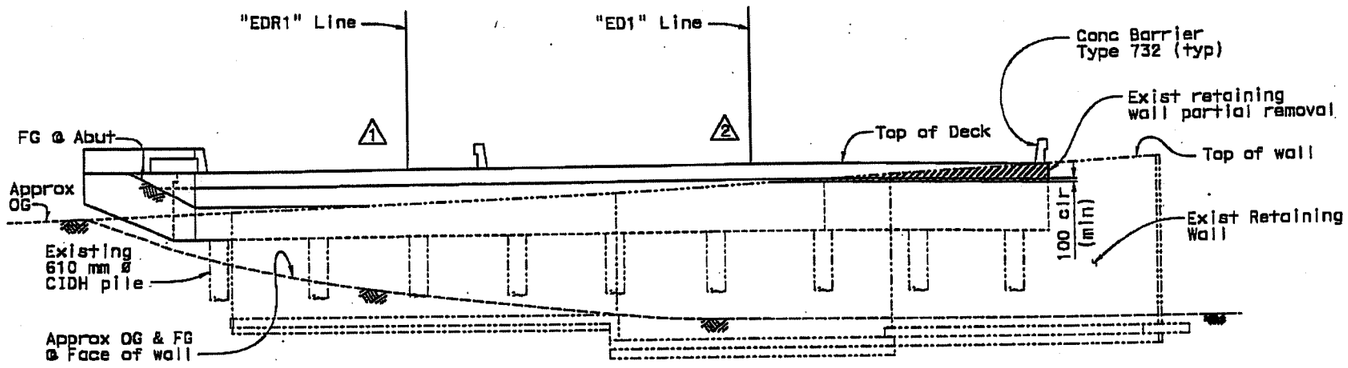

ELEVATION-ABUTMENT 47A
1:100
(Looking Downstation)

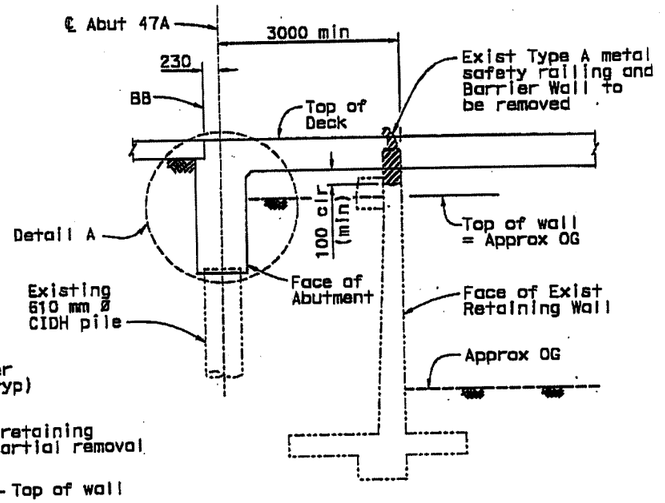

LEGEND:
Indicates Existing Structure
Indicates Bridge Removal (Portion)

SECTION A-A
1:50

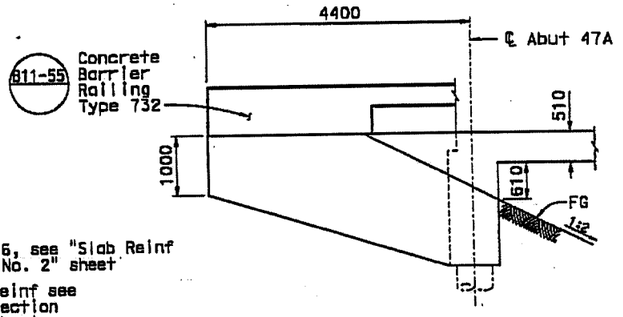

WINGWALL ELEVATION B0-1
1:50

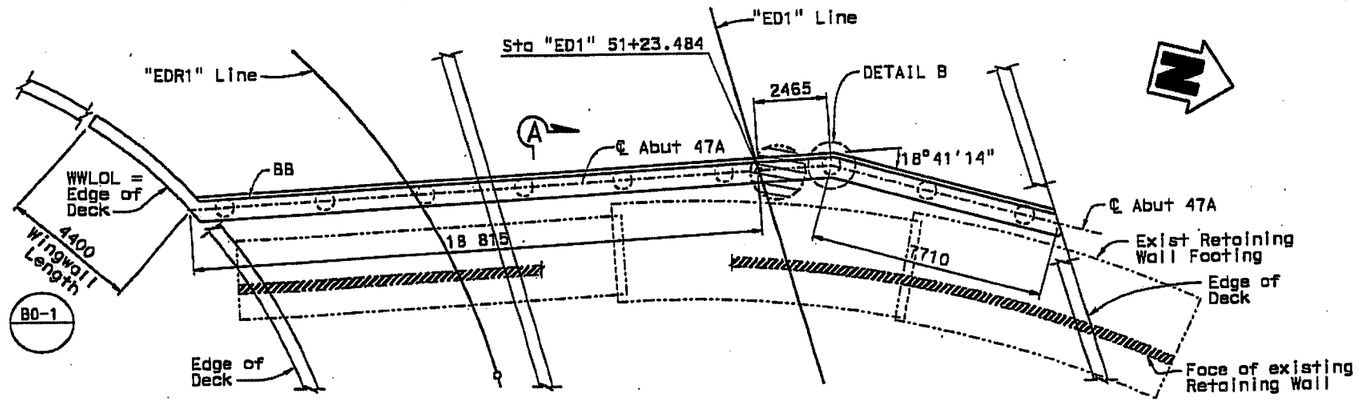

PLAN
1:100

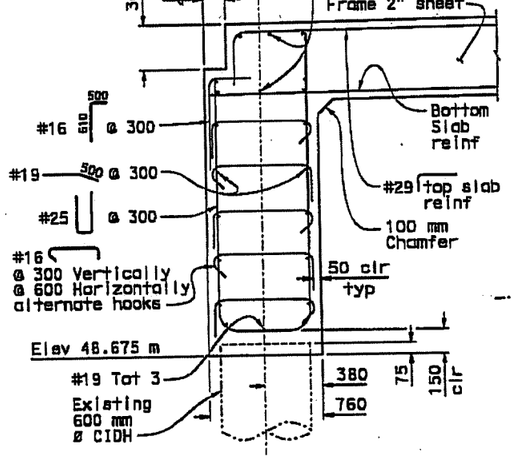

DETAIL A
1:20

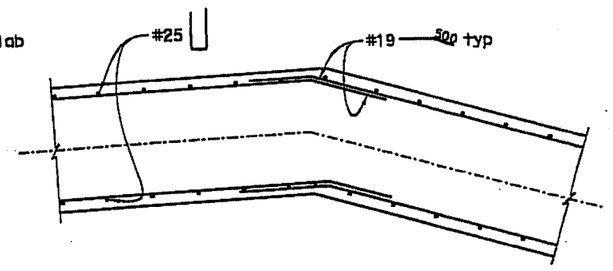

DETAIL B
1:20

NOTE:
THE CONTRACTOR SHALL VERIFY ALL CONTROLLING FIELD DIMENSIONS BEFORE ORDERING OR FABRICATING ANY MATERIAL.

DESIGN	BY C. M. Duan	CHECKED M. J. Cullen	
DETAILS	BY G. M. Souza/S. Jiang	CHECKED M. J. Cullen	
QUANTITIES	BY C. M. Duan	CHECKED M. J. Cullen	

Caltrans Metric

ALL DIMENSIONS ARE IN MILLIMETERS UNLESS OTHERWISE SHOWN

ORIGINAL SCALE IN MILLIMETERS FOR REDUCED PLANS 0 10 20 30 40 50 60 70 80 90 100

STATE OF CALIFORNIA
DEPARTMENT OF TRANSPORTATION

DIVISION OF ENGINEERING SERVICES
STRUCTURE DESIGN
DESIGN BRANCH 5

CU 04251
EA 0120P1

FILE => 34-0006-h-b47a-lo_r1.dgn

BRIDGE NO. 34-0006
KILOMETER POST 12.6

WEST TIE IN PHASE 2
SOUTH - SOUTH DETOUR
ABUTMENT 47A LAYOUT

DISREGARD PRINTS BEARING EARLIER REVISION DATES →

REVISION DATES								SHEET	OF
07-09-08	07-24-08	08-04-08	12-05-08	12-22-08	01-02-09	2-20-09		32R1	64

STRUCTURES DESIGN DETAIL SHEET (METRIC) (REV. 03-17-04)

USERNAME => sbaiza DATE PLOTTED => 13-AUG-2008 TIME PLOTTED => 16:43

DIST	COUNTY	ROUTE	KILOMETER POST TOTAL PROJECT	SHEET No	TOTAL SHEETS
04	SF	80	12.6/13.2		

08-11-08
REGISTERED CIVIL ENGINEER DATE

PLANS APPROVAL DATE.

REGISTERED PROFESSIONAL ENGINEER M. J. CULLEN No. C 40820 Exp. 03-31-09 CIVIL STATE OF CALIFORNIA

The State of California or its officers or agents shall not be responsible for the accuracy or completeness of electronic copies of this plan sheet.

Notes:

1. Cut off existing PP 610 x 12.7 at the level of O.G.
2. Soil shall be removed from PP 610 x 12.7 to a maximum elevation of 39.5 m, inside wall of PP610 x 12.7 shall be cleaned prior to placement of rebar cage and concrete.
3. All Hoops shall be Ultimate Butt Spliced

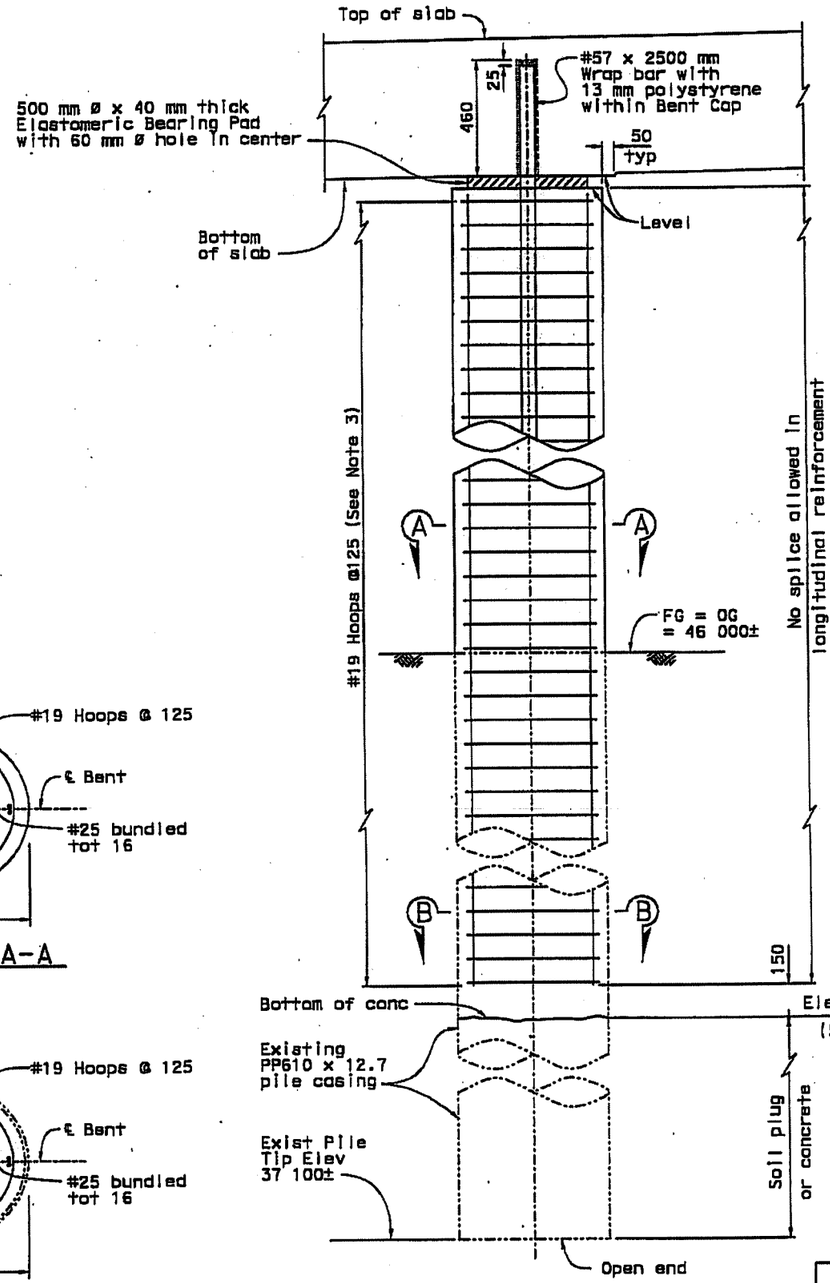

ELEVATION
no scale

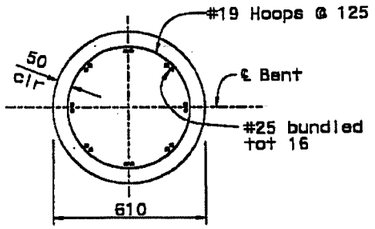

SECTION A-A
no scale

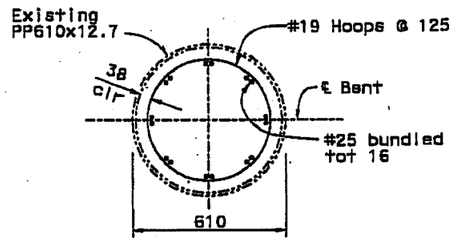

SECTION B-B
no scale

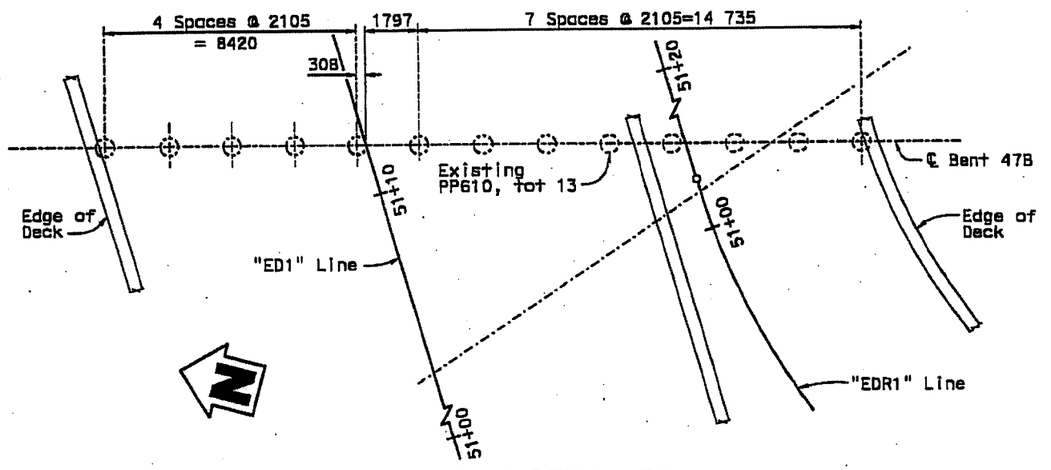

PLAN-BENT 47B
1:100

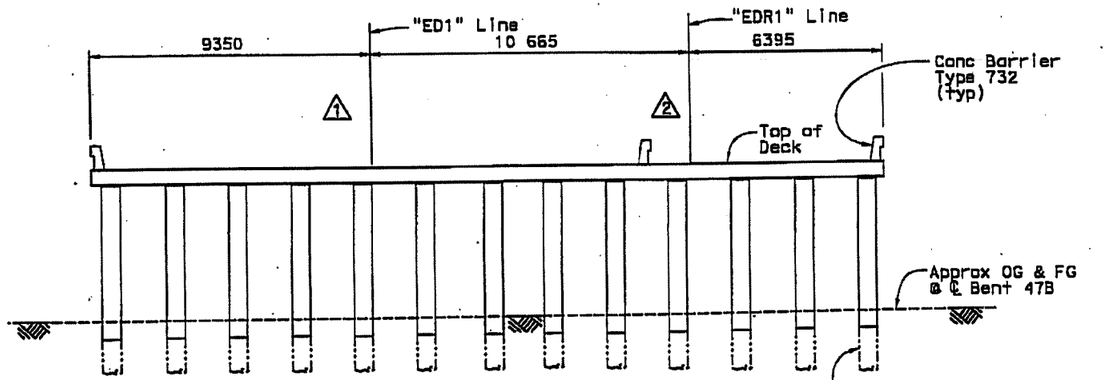

STA "ED1" 51+31.852
ELEVATION-BENT 47B
1:100

NOTE:
THE CONTRACTOR SHALL VERIFY ALL CONTROLLING FIELD DIMENSIONS BEFORE ORDERING OR FABRICATING ANY MATERIAL.

CISS PIPE PILE & EXTENSION
no scale

MARK	DATE	REVISION(S) DESCRIPTIONS	DES	CHK	DET
2	07-09-08	Eliminate Profile Grade at "EDR1" Line	CD	MC	SJ
1	07-09-08	Eliminate Profile Grade at "EDI" Line	CD	MC	SJ

REGISTERED CIVIL ENGINEER: DATE:

REGISTERED PROFESSIONAL ENGINEER M. J. Cullen No. C 40820 Exp. 03-31-09 CIVIL STATE OF CALIFORNIA

CONTRACT CHANGE ORDER NO. 208
SHEET 17 OF 22

Caltrans Metric

	BY	CHECKED
DESIGN	C. W. Duan	M. J. Cullen
DETAILS	G. M. Souza/S. Jiang	M. J. Cullen
QUANTITIES	C. W. Duan	M. J. Cullen

ALL DIMENSIONS ARE IN MILLIMETERS UNLESS OTHERWISE SHOWN

ORIGINAL SCALE IN MILLIMETERS FOR REDUCED PLANS 0 10 20 30 40 50 60 70 80 90 100

STATE OF CALIFORNIA
DEPARTMENT OF TRANSPORTATION

DIVISION OF ENGINEERING SERVICES
STRUCTURE DESIGN
DESIGN BRANCH 5

CU 04251
EA 0120P1

FILE => 34-0006-h-b47b-lo_r1.dgn

BRIDGE NO. 34-0006
KILOMETER POST 12.6

DISREGARD PRINTS BEARING EARLIER REVISION DATES

REVISION DATES: 07-09-08 | | | | | | | | | | | |

SHEET 33R1 OF 64

STRUCTURES DESIGN DETAIL SHEET (METRIC) (REV.03-17-04)

WEST TIE IN PHASE 2
SOUTH - SOUTH DETOUR
BENT 47B LAYOUT

USERNAME => GBOUZO DATE PLOTTED => 14-AUG-2008 TIME PLOTTED => 11:26

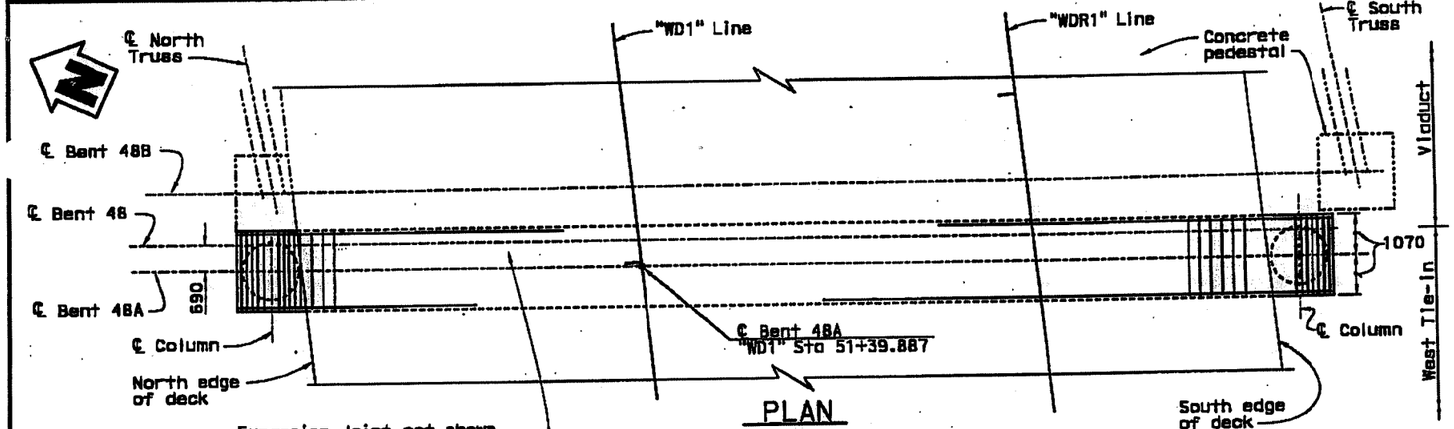

PLAN
1:80

Note: Concrete Barriers not shown for clarity.

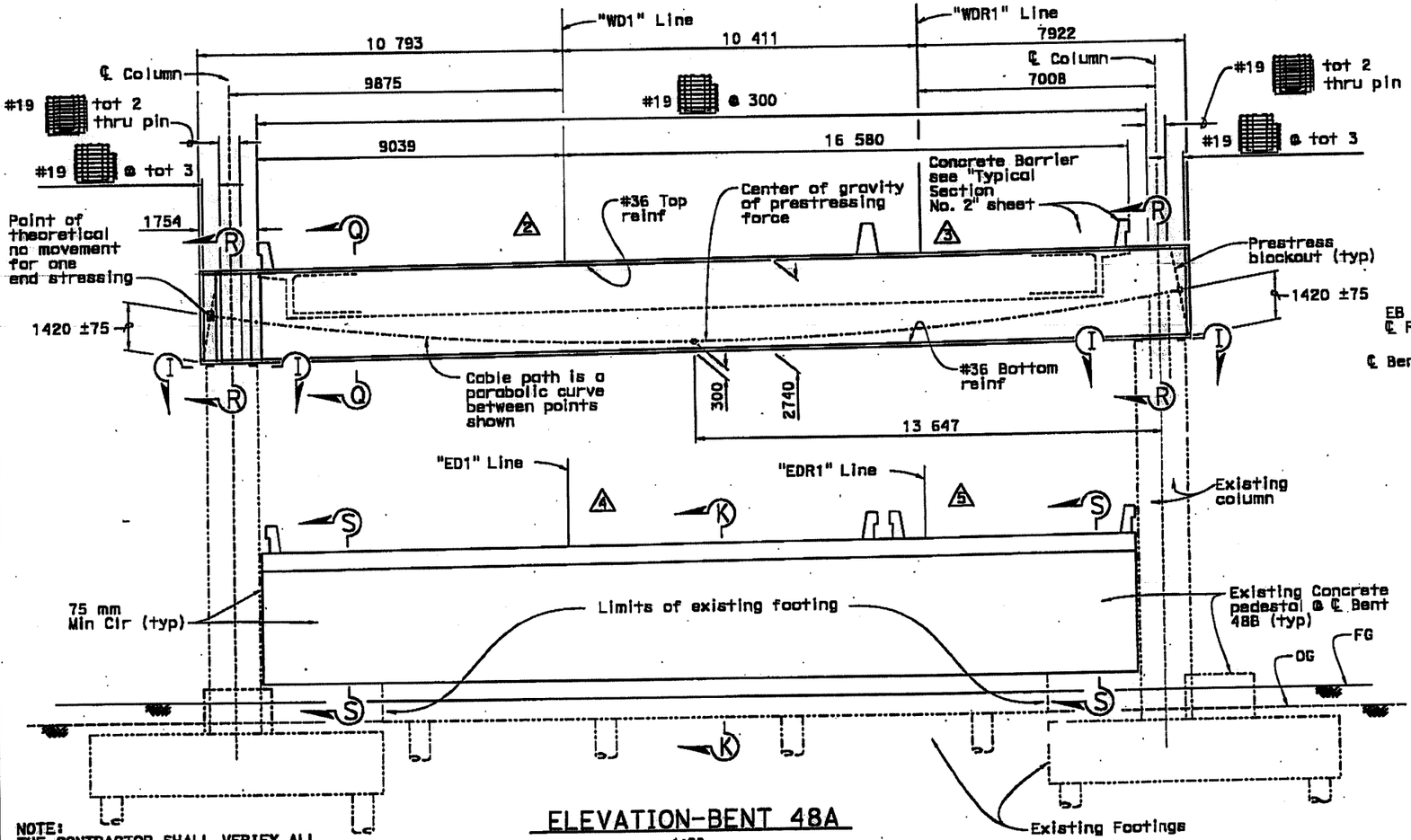

ELEVATION-BENT 48A
1:80
STA "WD1" 51+39.887

NOTE:
THE CONTRACTOR SHALL VERIFY ALL CONTROLLING FIELD DIMENSIONS BEFORE ORDERING OR FABRICATING ANY MATERIAL.

BENT CAP PRESTRESSING NOTES

1860 MPa Low Relaxation Strand:

P_{jack} = 27 500 kN

Anchor Set = 10 mm

Friction Curvature Coefficient (μ) = 0.20
Friction Wobble Coefficient (K) = 6.6x10⁻⁴/mm

Concrete: f'_c = 28.0 MPa @ 28 days

f'_{ci} = 25.0 MPa @ time of stressing

Contractor shall submit elongation calculations based on initial stress at
B = 0.730 times jacking stress.

One end stressing shall be performed from Southeast end.

Notes:
1. For Sections Q-Q & R-R, see "Bent Cap Details No. 5" sheet.
2. For Section I-I see "Column Details No. 1" sheet.

MARK	DATE	REVISION(S) DESCRIPTIONS	DES	CHK	DET
5	07-09-08	Eliminate Profile Grade at "EDR1" Line	CD	MC	TC
4	07-09-08	Eliminate Profile Grade at "ED1" Line	CD	MC	TC
3	07-09-08	Eliminate Profile Grade at "WDR1" Line	CD	MC	TC
2	07-09-08	Eliminate Profile Grade at "WD1" Line	CD	MC	TC
1	03-25-08	Revised EB Location	CD	MC	TC

REGISTERED CIVIL ENGINEER: DATE:

04 SF 80 12.6/13.2

08-11-08
REGISTERED CIVIL ENGINEER DATE

PLANS APPROVAL DATE

The State of California or its officers or agents shall not be responsible for the accuracy or completeness of electronic copies of this plan sheet.

REGISTERED PROFESSIONAL ENGINEER
M. J. CULLEN
No. C 40620
Exp. 03-31-09
CIVIL
STATE OF CALIFORNIA

CONTRACT CHANG
ORDER NO. 208
SHEET 18 OF 22

REGISTERED PROFESSIONAL ENGINEER
M.J. Cullen
No. C 40620
Exp. 03-30-09
CIVIL
STATE OF CALIFORNIA

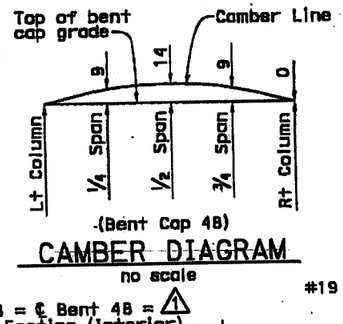

(Bent Cap 48)
CAMBER DIAGRAM
no scale

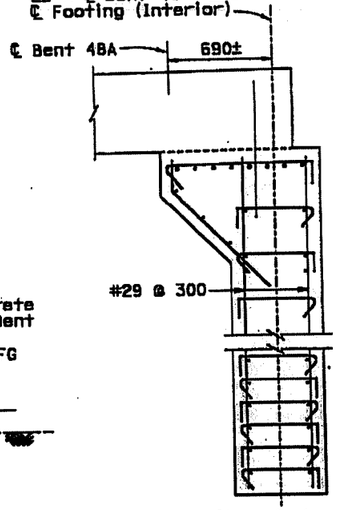

For details not shown see "Section K-K"

SECTION S-S
1:20

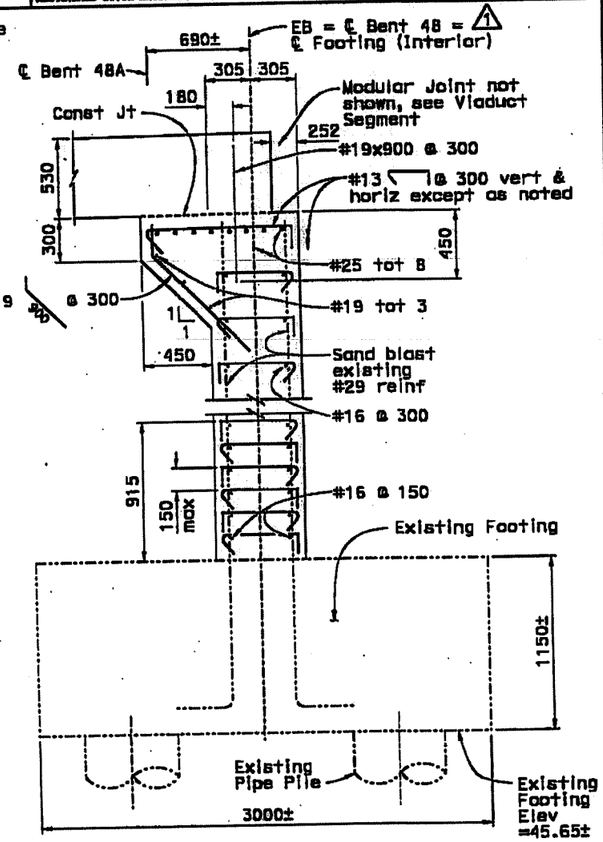

SECTION K-K
1:20

DESIGN	BY C. M. Duon	CHECKED M. J. Cullen	
DETAILS	BY G. M. Souza/SJ/TC	CHECKED M. J. Cullen	
QUANTITIES	BY C. M. Duon	CHECKED M. J. Cullen	

STATE OF CALIFORNIA
DEPARTMENT OF TRANSPORTATION

DIVISION OF ENGINEERING SERVICES
STRUCTURE DESIGN
DESIGN BRANCH 5

BRIDGE NO. 34-0006
KILOMETER POST 12.6

CU 04251
EA 0120F1

FILE => 34-0006-h-b48_1o_r1.dgn

ALL DIMENSIONS ARE IN MILLIMETERS UNLESS OTHERWISE SHOWN

ORIGINAL SCALE IN MILLIMETERS FOR REDUCED PLANS 0 10 20 30 40 50 60 70 80 90 100

DISREGARD PRINTS BEARING EARLIER REVISION DATES

REVISION DATES

SHEET 34R1 OF 64

STRUCTURES DESIGN DETAIL SHEET (METRIC) REV. 03-17-04

WEST TIE IN PHASE 2
SOUTH - SOUTH DETOUR
BENT 48A LAYOUT

USERNAME => cmduon DATE PLOTTED => 14-AUG-2008 TIME PLOTTED => 11:21

MARK	DATE	REVISION(S) DESCRIPTIONS	DES	CHK	DET
1	03-25-08	Revised EB Location	CD	MC	TC

REGISTERED CIVIL ENGINEER: DATE:

M.J. Cullen No. C 40820 Exp. 03-30-09 CIVIL STATE OF CALIFORNIA

04	SF	80	12.6/13.2	

08-11-08
REGISTERED CIVIL ENGINEER DATE

PLANS APPROVAL DATE

The State of California or its officers or agents shall not be responsible for the accuracy or completeness of electronic copies of this plan sheet.

M. J. CULLEN No. C 40820 Exp. 03-31-09 CIVIL STATE OF CALIFORNIA

CONTRACT CHANGE ORDER NO. 208
SHEET 19 OF 22

Note:
For Girder reinforcement, see "Typical Section No.2" sheet.

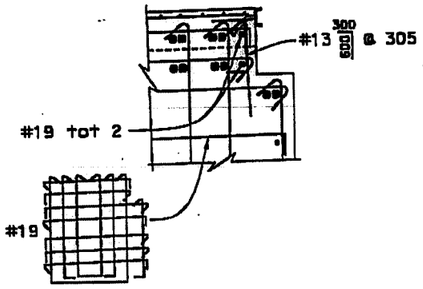

(Between Modular Joint Pivot Box, typ)

DETAIL 1
1:20

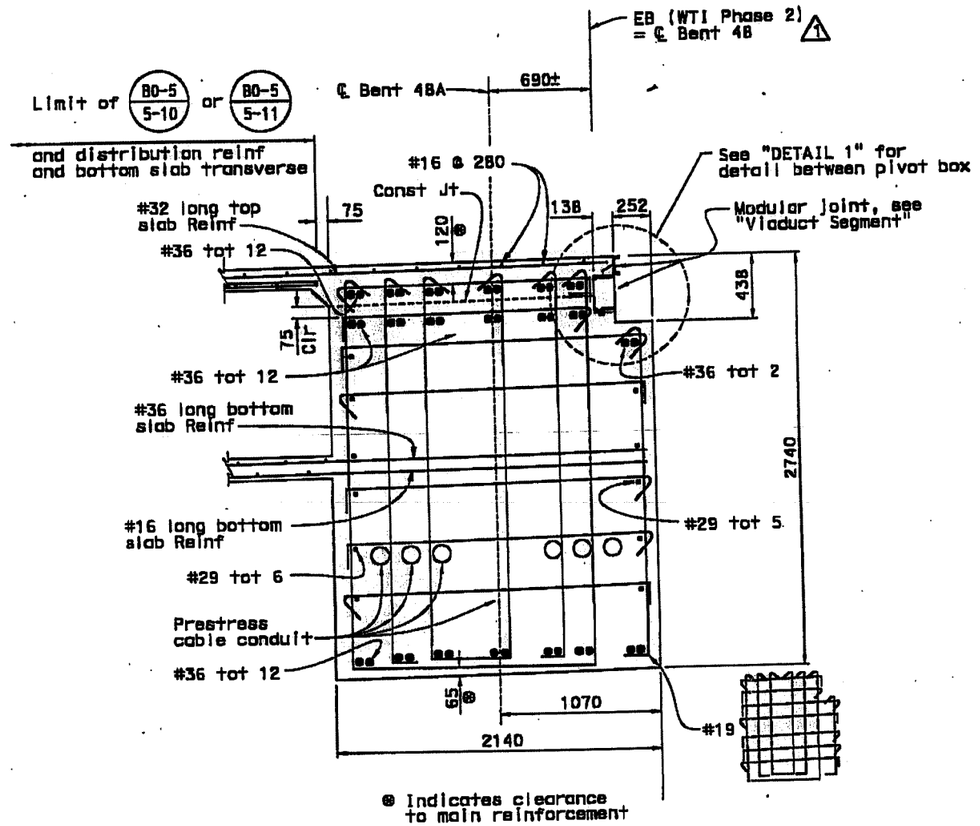

SECTION Q-Q
1:20

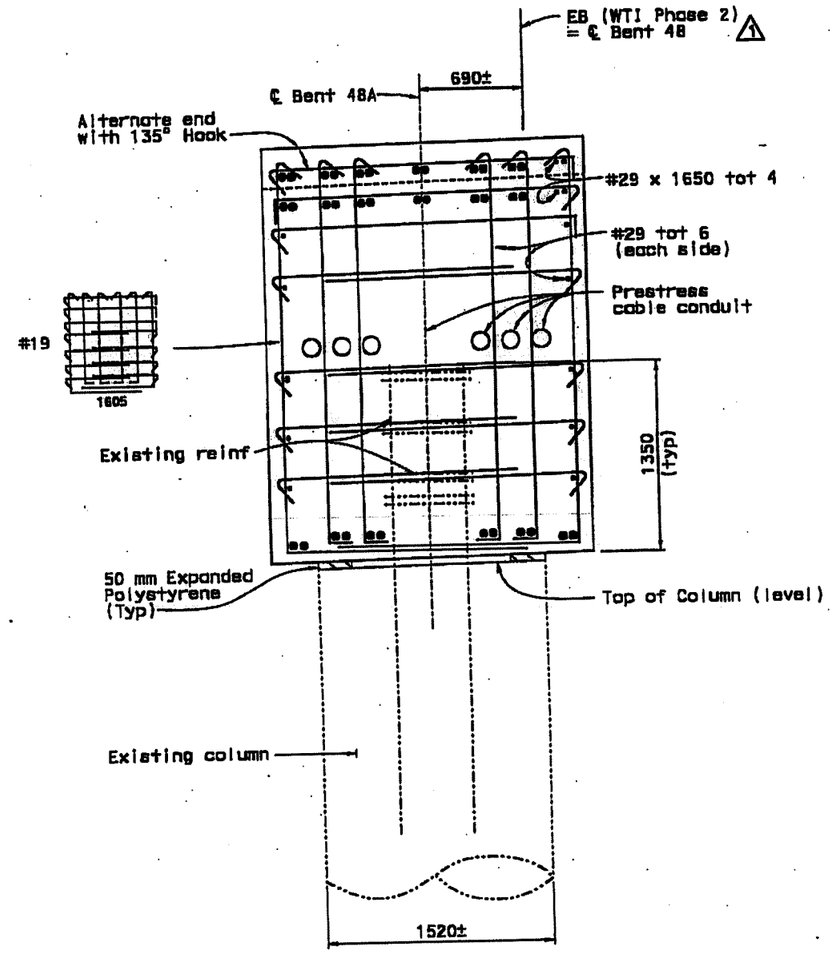

Note: For details not shown, see Section "Q-Q"

SECTION R-R
1:20

NOTE:
THE CONTRACTOR SHALL VERIFY ALL CONTROLLING FIELD DIMENSIONS BEFORE ORDERING OR FABRICATING ANY MATERIAL.

DESIGN	BY C. M. Duan	CHECKED M. J. Cullen	
DETAILS	BY G. Souza/S. Jiang	CHECKED M. J. Cullen	
QUANTITIES	BY C. M. Duan	CHECKED M. J. Cullen	

Caltrans Metric

ALL DIMENSIONS ARE IN MILLIMETERS UNLESS OTHERWISE SHOWN

ORIGINAL SCALE IN MILLIMETERS FOR REDUCED PLANS 0 10 20 30 40 50 60 70 80 90 100

STATE OF CALIFORNIA
DEPARTMENT OF TRANSPORTATION

DIVISION OF ENGINEERING SERVICES STRUCTURE DESIGN
DESIGN BRANCH 5

CU 04251
EA 0120P1

FILE => 34-0006-1-bent_det05r1.dgn

BRIDGE NO. 34-0006
KILOMETER POST 12.6

DISREGARD PRINTS BEARING EARLIER REVISION DATES.

WEST TIE IN PHASE 2
SOUTH - SOUTH DETOUR
BENT CAP DETAILS NO. 5

REVISION DATES										SHEET	OF
										42R1	64

STRUCTURES DESIGN DETAIL SHEET (METRIC) (REV.03-17-04)

USERNAME => dsouza
DATE PLOTTED => 14-AUG-2008
TIME PLOTTED => 11:20

04	SF	80	12.6/13.2		

08-11-08
REGISTERED CIVIL ENGINEER DATE

PLANS APPROVAL DATE

The State of California or its officers or agents shall not be responsible for the accuracy or completeness of electronic copies of this plan sheet.

REGISTERED PROFESSIONAL ENGINEER — M. J. CULLEN — No. C 40620 — Exp. 03-31-09 — CIVIL — STATE OF CALIFORNIA

Notes;
1. For Deck Drain Details, not shown, see B7-6
2. All pipes to be NPS 6 x 3.42 welded steel pipe.

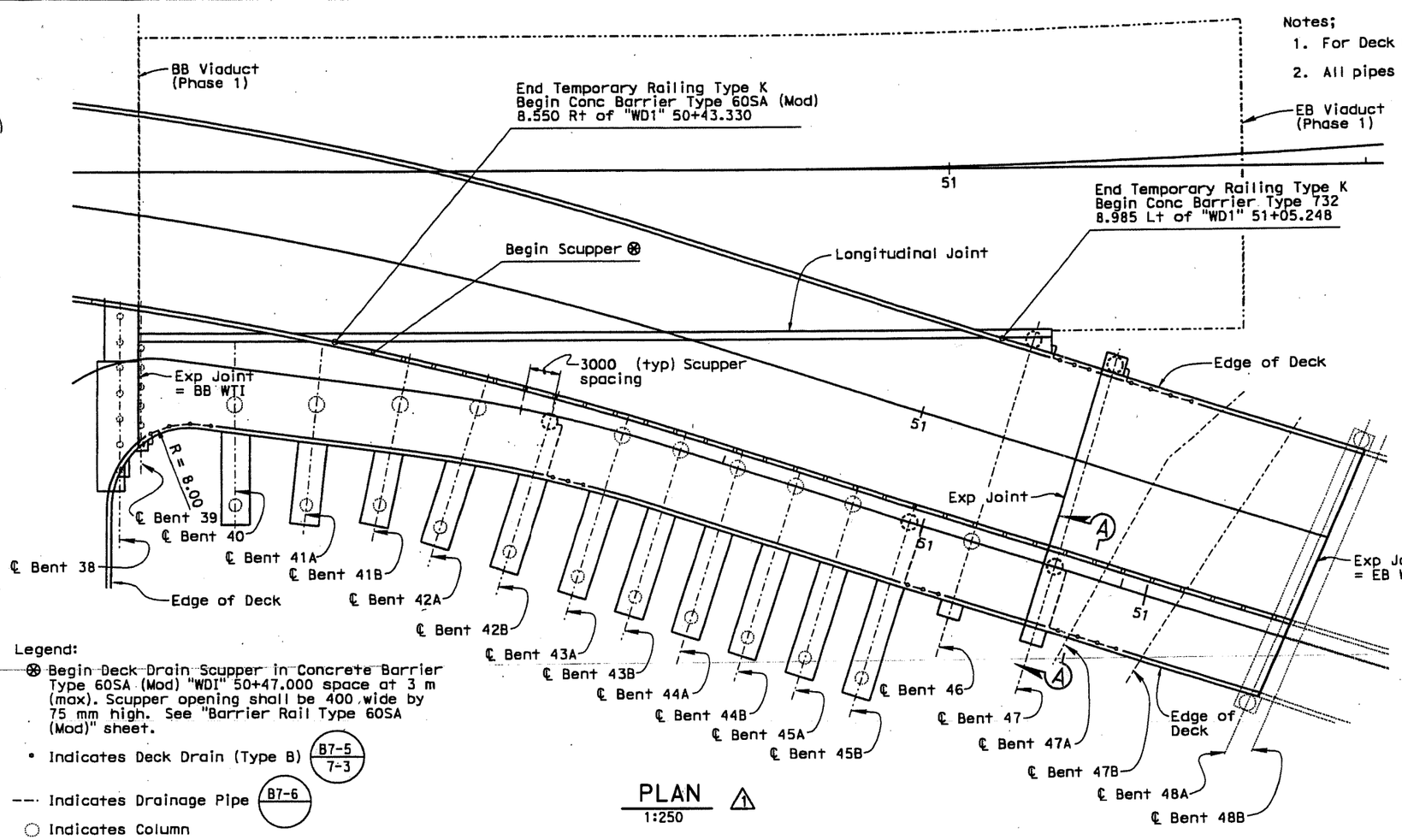

PLAN ⚠1
1:250

Legend:
⊛ Begin Deck Drain Scupper in Concrete Barrier Type 60SA (Mod) "WD1" 50+47.000 space at 3 m (max). Scupper opening shall be 400 wide by 75 mm high. See "Barrier Rail Type 60SA (Mod)" sheet.
• Indicates Deck Drain (Type B) B7-5 / 7-3
--- Indicates Drainage Pipe B7-6
○ Indicates Column

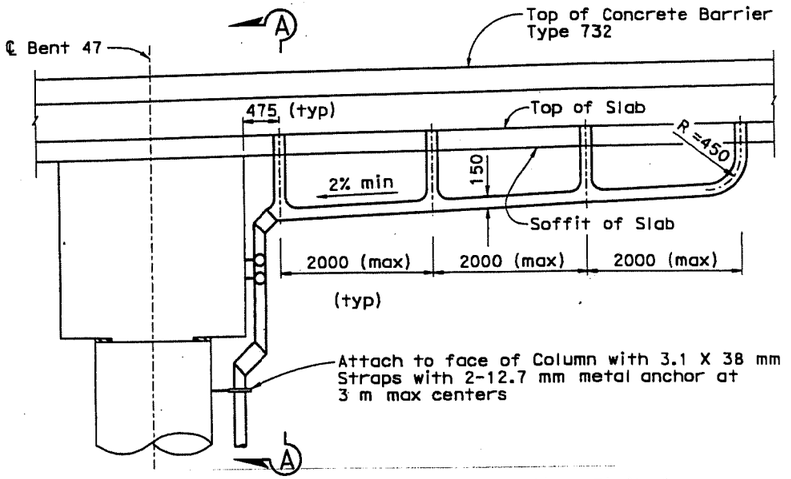

(Column 47R Shown, Other Locations Similar)

ELEVATION ⚠1
1:40

DETAIL A ⚠1
1:10

VIEW B-B ⚠1
1:10

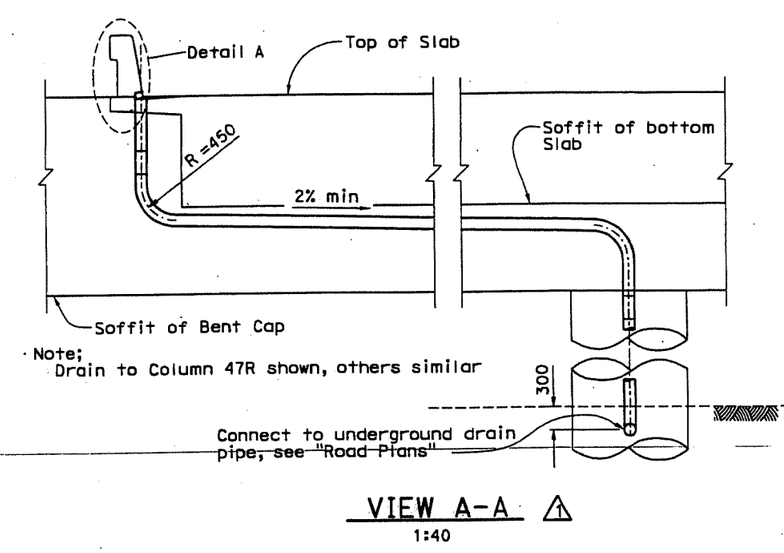

VIEW A-A ⚠1
1:40

MARK	DATE	REVISION(S) DESCRIPTIONS	DES	CHK	DET
⚠1	03-26-08	Added New Plan	CD	MC	TC

REGISTERED CIVIL ENGINEER: DATE:

REGISTERED PROFESSIONAL ENGINEER — M.J. Cullen — No. C 40620 — Exp. 03-30-09 — CIVIL — STATE OF CALIFORNIA

CONTRACT CHANGE ORDER NO. 208
SHEET 20 OF 22

NOTE:
THE CONTRACTOR SHALL VERIFY ALL CONTROLLING FIELD DIMENSIONS BEFORE ORDERING OR FABRICATING ANY MATERIAL.

Caltrans Metric

ALL DIMENSIONS ARE IN MILLIMETERS UNLESS OTHERWISE SHOWN

ORIGINAL SCALE IN MILLIMETERS FOR REDUCED PLANS 0 10 20 30 40 50 60 70 80 90 100

DESIGN	BY C. M. Duan	CHECKED M. J. Cullen	
DETAILS	BY T. Cotton	CHECKED M. J. Cullen	
QUANTITIES	BY C. M. Duan	CHECKED M. J. Cullen	

STATE OF CALIFORNIA
DEPARTMENT OF TRANSPORTATION

DIVISION OF ENGINEERING SERVICES
STRUCTURE DESIGN
DESIGN BRANCH 5

CU 04251
EA 0120P1

BRIDGE NO.	WEST TIE IN PHASE 2
34-0006	SOUTH - SOUTH DETOUR
KILOMETER POST 12.6	DECK DRAINAGE DETAILS

DISREGARD PRINTS BEARING EARLIER REVISION DATES

REVISION DATES: 02-01-04 03-17-04 03-19-04 03-22-04 04-02-04 09-11-08

SHEET 56R1 OF 64

DATE PLOTTED => 13-AUG-2008 TIME PLOTTED => 16:43

MARK	DATE	REVISION(S) DESCRIPTIONS	DES	CHK	DET
1	02-03-09	Luminaire on Type 60SA barrier detail removed	MC	CD	GS

REGISTERED CIVIL ENGINEER: DATE:

REGISTERED PROFESSIONAL ENGINEER M.J. Cullen No. C 40620 Exp. 03-30-09 CIVIL STATE OF CALIFORNIA

CONTRACT CHANGE ORDER NO. 208
SHEET 21 OF 22

04	SF	80	12.6/13.2

M J Cullen 02-03-09
REGISTERED CIVIL ENGINEER DATE

PLANS APPROVAL DATE

The State of California or its officers or agents shall not be responsible for the accuracy or completeness of electronic copies of this plan sheet.

REGISTERED PROFESSIONAL ENGINEER M. J. CULLEN No. C 40620 Exp. 03-31-09 CIVIL STATE OF CALIFORNIA

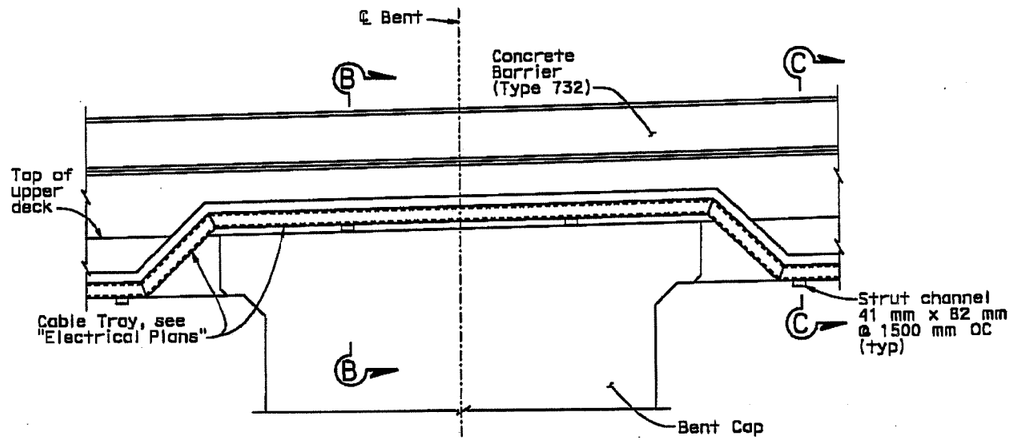

PART ELEVATION SPANS 39 TO 47

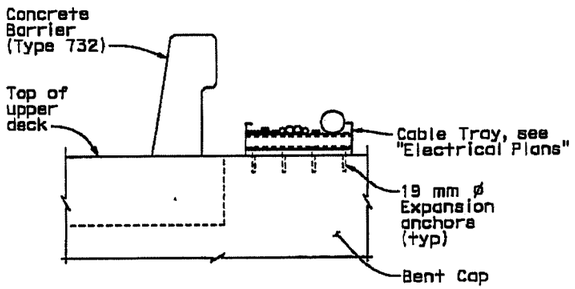

SECTION B-B

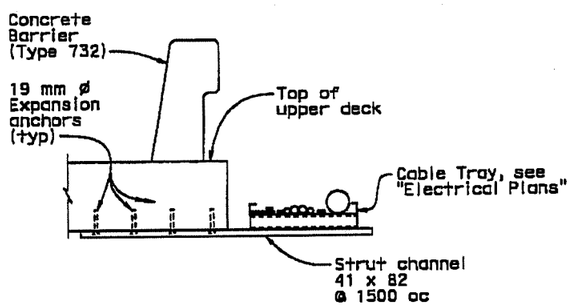

SECTION C-C

CABLE TRAY MOUNTING DETAILS
1:20

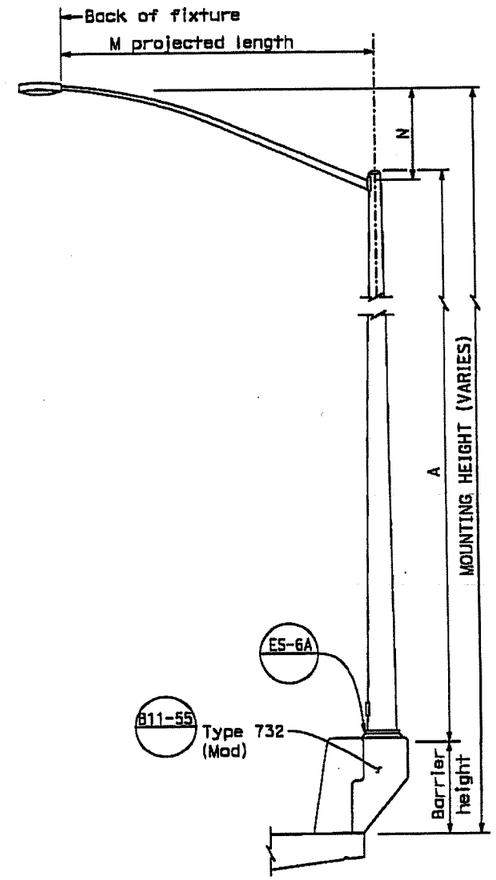

West Bound Traffic @ Right Edge of Deck
ELEVATION @ TYPE 21 BARRIER RAIL MOUNTED
1:25

NOTE:
THE CONTRACTOR SHALL VERIFY ALL CONTROLLING FIELD DIMENSIONS BEFORE ORDERING OR FABRICATING ANY MATERIAL.

Caltrans Metric

	BY	CHECKED
DESIGN	C. M. Duan	M. J. Cullen
DETAILS	G. M. Souza/S. Jiang	M. J. Cullen
QUANTITIES	C. M. Duan	M. J. Cullen

ALL DIMENSIONS ARE IN MILLIMETERS UNLESS OTHERWISE SHOWN

ORIGINAL SCALE IN MILLIMETERS FOR REDUCED PLANS 0 10 20 30 40 50 60 70 80 90 100

STATE OF CALIFORNIA
DEPARTMENT OF TRANSPORTATION

DIVISION OF ENGINEERING SERVICES
STRUCTURE DESIGN
DESIGN BRANCH 5

CU 04251
EA 0120P1

BRIDGE NO. 34-0006
KILOMETER POST 12.6

DISREGARD PRINTS BEARING EARLIER REVISION DATES

REVISION DATES 2-06-08 02-22-08 02-03-09

FILE => 34-0006-r-luminaire-dt101-r1.dgn

STRUCTURES DESIGN DETAIL SHEET (METRIC) (REV.03-17-04)

WEST TIE IN PHASE 2
SOUTH - SOUTH DETOUR
LUMINAIRE MOUNTING DETAILS

SHEET 57R1 OF 64

USERNAME => asouza DATE PLOTTED => 03-FEB-2009 TIME PLOTTED => 13:30

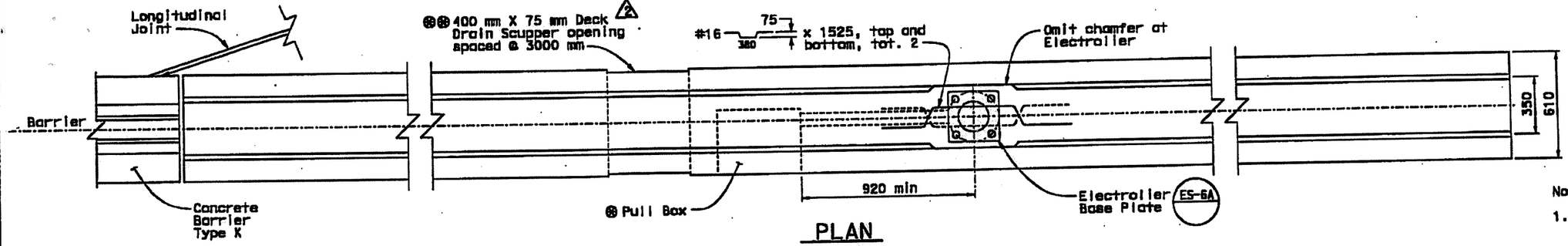

PLAN
no scale

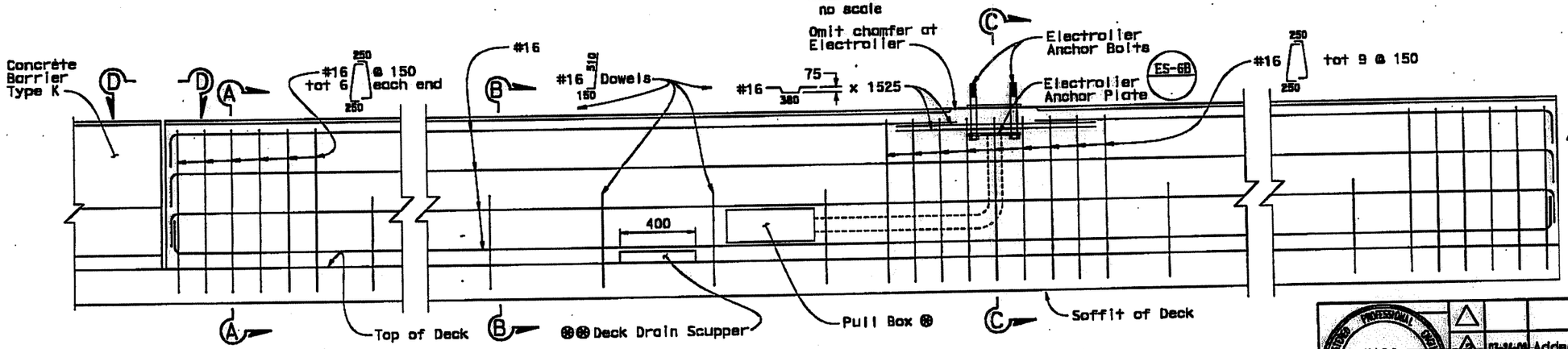

ELEVATION
no scale

Notes:

1. Modified Concrete Barrier Type 60SA should meet all specifications in Standard Plans except as noted.
2. Top Longitudinal Reinforcement discontinued within the limit of Electrolier Anchor Plate.

⊛ For location of Pull Boxes, see "Electrical Plans".

⊛⊛ For locations of Deck Drain Scuppers, see "Deck Drainage Details" sheet.

REGISTERED CIVIL ENGINEER 05-11-08 DATE

PLANS APPROVAL DATE

The State of California or its officers or agents shall not be responsible for the accuracy or completeness of electronic copies of this plan sheet.

REGISTERED PROFESSIONAL ENGINEER M. J. CULLEN No. C 40620 Exp. 03-31-09 CIVIL STATE OF CALIFORNIA

MARK	DATE	REVISION(S) DESCRIPTIONS	DES	CHK	DET
2	03-24-08	Added Note			
1	03-24-08	Added Deck Drain Scupper	CD	MC	TC

REGISTERED CIVIL ENGINEER: DATE:

CONTRACT CHANGE ORDER NO. 208
SHEET 22 OF 22

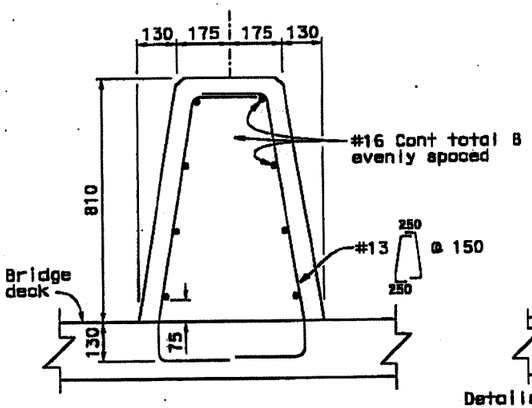

SECTION A-A
1:10

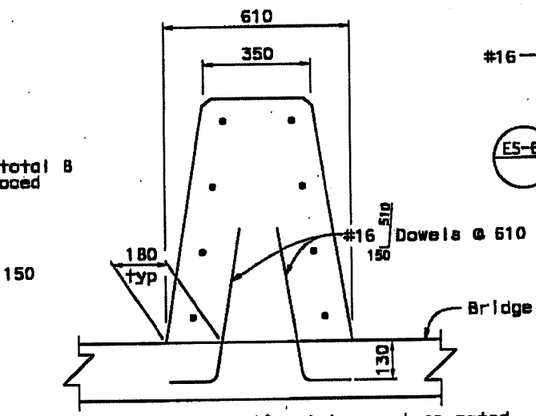

Details similar to Section A-A except as noted

SECTION B-B
1:10

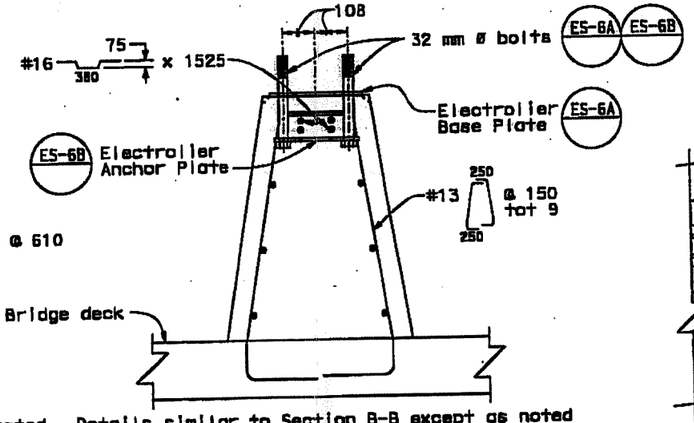

Details similar to Section B-B except as noted

SECTION C-C
1:10

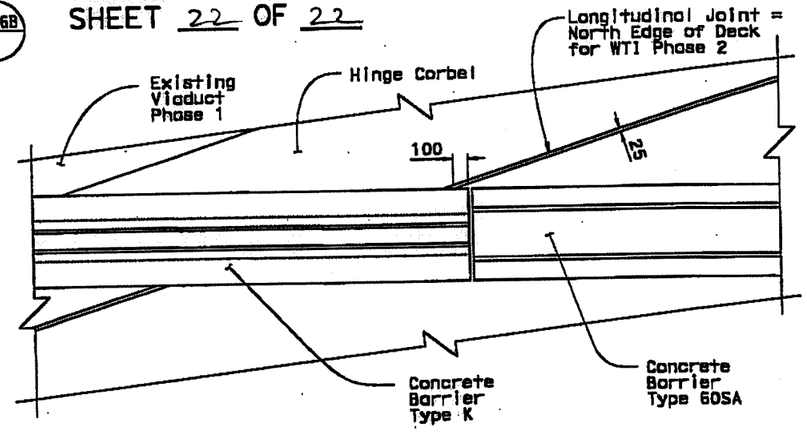

VIEW D-D
1:20

NOTE:
THE CONTRACTOR SHALL VERIFY ALL CONTROLLING FIELD DIMENSIONS BEFORE ORDERING OR FABRICATING ANY MATERIAL.

Caltrans Metric

	BY	CHECKED
DESIGN	C. M. Duan	M. Cullen
DETAILS	G. M. Souza/S. Jiang	M. Cullen
QUANTITIES	C. M. Duan	M. Cullen

ALL DIMENSIONS ARE IN MILLIMETERS UNLESS OTHERWISE SHOWN

ORIGINAL SCALE IN MILLIMETERS FOR REDUCED PLANS 0 10 20 30 40 50 60 70 80 90 100

STATE OF CALIFORNIA
DEPARTMENT OF TRANSPORTATION

DIVISION OF ENGINEERING SERVICES
STRUCTURE DESIGN
DESIGN BRANCH 5

CU 04251
EA 0120P1

FILE => 34-0006-r-type60samcdr1.dgn

BRIDGE NO. 34-0006
KILOMETER POST 12.6

DISREGARD PRINTS BEARING EARLIER REVISION DATES

REVISION DATES

STRUCTURES DESIGN DETAIL SHEET (METRIC) (REV.03-17-04)

WEST TIE IN PHASE 2
SOUTH - SOUTH DETOUR
MODIFIED CONCRETE BARRIER TYPE 60SA

SHEET 58R1 OF 64

USERNAME => qsouza DATE PLOTTED => 13-AUG-2008 TIME PLOTTED => 16:44

STATE OF CALIFORNIA - DEPARTMENT OF TRANSPORTATION

CONTRACT CHANGE ORDER MEMORANDUM

TO: MIKE FORNER / DEANNA VILCHECK	FILE: E.A. 04 - 0120R4 CO-RTE-PM SF-80-12.6/13.2 FED. NO.
FROM: JEANNIE BALDERRAMOS	
CCO#: 208 SUPPLEMENT#: 0 Category Code: CHPT	CONTINGENCY BALANCE (incl. this change) $38,269,564.59
COST: $131,600.00 INCREASE ☑ DECREASE ☐	HEADQUARTERS APPROVAL REQUIRED? ☐ YES ☑ NO
SUPPLEMENTAL FUNDS PROVIDED: $0.00	IS THIS REQUEST IN ACCORDANCE WITH ENVIRONMENTAL DOCUMENTS? ☑ YES ☐ NO
CCO DESCRIPTION: Miscellaneous WTI Changes	PROJECT DESCRIPTION: CONSTRUCT ROUTE 80 TEMP BYPASS STRUCTURE

Original Contract Time:	Time Adj. This Change:	Previously Approved CCO Time Adjustments:	Percentage Time Adjusted: (including this change)	Total # of Unreconciled Deferred Time CCO(s): (including this change)
475 Day(s)	0 Day(s)	1660 Day(s)	349 %	0

THIS CHANGE ORDER PROVIDES FOR:

Miscellaneous changes to the construction of the West Tie-In (WTI) structure.

This project was awarded in March 2004 to construct a detour that will allow for the tie in of the new east span of the San Francisco Oakland Bay Bridge (SFOBB) to Yerba Buena Island. The TBS encompasses three main structures, the East Tie-In (ETI) to the existing bridge, the West Tie-In (WTI) to Yerba Buena Island and the Viaduct structure between the two tie ins.

The original contract was awarded as a performance based contract with the contractor responsible for the design of the structures based upon certain design criteria. The Department issued a December 14, 2006 memo entitled Strategy for South-South Detour Contract Completion which was approved by Tony Anziano (Toll Bridge Program Manager), Richard Land (Chief Engineer) and subsequently the TBPOC that provided for the Department to assume control of the design of the West Tie-In structure from the contractor.

As requested by Toll Bridge Design, this change order provides for numerous changes to the structure's lighting, concrete bent caps and deck, alignment, joint seals and deck drains along with other miscellaneous revisions. Major costs associated with this change include additional concrete placement and testing costs and additional costs associated with the realignment of a concrete barrier.

Compensation for this work shall be paid as an adjustment of compensation at an agreed unit price of $131,600.00 which shall be financed from the contract's contingency funds. A cost analysis is on file.

No adjustment of contract time is warranted as the change will not affect the controlling operation.

Mike Whiteside - YBI Coordination Engineer requested this change per Memorandum on November 12, 2008 with concurrences by Ken Terpstra - Project Manager, Jaime Gutierrez - Project Engineer, and Lina Ellis - Structure Maintenance.

ADA Notice: For individuals with sensory disabilities, this document is available in alternate formats. For information call: (916) 654-6410 or TDD (916) 654-3880 or write Records and Forms Management, 1120 N Street, MS-89, Sacramento, CA 95814.

CONCURRED BY:		
Construction Engineer:	Jeannie Balderramos, RE	Date 5-4-10
Bridge Engineer:	Bill Casey, Bridge Engineer	Date 5/4/10
Project Engineer:	Jaime Gutierrez, PE	Date 4/9/10
Project Manager:	Ken Terpstra, PM	Date 5/4/10
FHWA Rep.:		Date
Environmental:		Date
Other (specify):	Lina Ellis, Maintenance	Date 3/8/10
Other (specify):	Mohan Ayadurai, Struct. Rep.	Date 4/4/10
District Prior Approval By:		Date
HQ (Issue Approve) By:		Date
Resident Engineer's Signature:	Jeannie Balderramos	Date 5-4-10

ESTIMATE OF COST	THIS REQUEST	TOTAL TO DATE
ITEMS	$0.00	$0.00
FORCE ACCOUNT	$0.00	$0.00
AGREED PRICE	$0.00	$0.00
ADJUSTMENT	$131,600.00	$131,600.00
TOTAL	$131,600.00	$131,600.00

FEDERAL PARTICIPATION

☐ PARTICIPATING ☐ PARTICIPATING IN PART ☑ NONE
☐ NON-PARTICIPATING (MAINTENANCE) ☐ NON-PARTICIPATING

FEDERAL SEGREGATION (if more than one Funding Source or P.I.P. type)
☐ CCO FUNDED PER CONTRACT ☐ CCO FUNDED AS FOLLOWS

FEDERAL FUNDING SOURCE	PERCENT

ADA Notice: For individuals with sensory disabilities, this document is available in alternate formats. For information call: (916) 654-6410 or TDD (916) 654-3880 or write Records and Forms Management, 1120 N Street, MS-89, Sacramento, CA 95814.

STATE OF CALIFORNIA - DEPARTMENT OF TRANSPORTATION

CONTRACT CHANGE ORDER

Change Requested by: Engineer

CCO 209	Suppl. No. 0	Contract No. 04 - 0120R4	Road SF-80-12.6/13.2	FED. AID LOC.: ACBRIM-080-1(097)N

To: **CC MYERS INC**

You are directed to make the following changes from the plans and specifications or do the following described work not included in the plans and specifications for this contract. ***NOTE: This change order is not effective until approved by the Engineer.***

Description of work to be done, estimate of quantities and prices to be paid. (Segregate between additional work at contract price, agreed price and force account.) Unless otherwise stated, rates for rental of equipment cover only such time as equipment is actually used and no allowance will be made for idle time. This last percentage shown is the net accumulated increase or decrease from the original quantity in the Engineer's Estimate.

Adjustment of Compensation at Lump Sum:

In accordance with Section 4-1.03 "Changes" of the contract Standard Specifications, provide compensation to the Contractor for additional costs incurred by the Contractor's subcontractor Danny's Construction Company, Inc pertaining to the requirement to allow U. S. Coast Guard traffic to pass through the work site on Macalla Road during the erection of the steel truss of the Viaduct of the Temporary Bypass Structure (Bridge No. 34-0006 (TEMP)).

For this work, the Contractor will be compensated a lump sum of $92,810.00. This sum constitutes full and final compensation for all additional costs, including all markups, associated with this work.

Total Cost of Adjustment of Compensation at Lump Sum $92,810.00

RECEIVED
011036 SEP 23 09

Estimated Cost: Increase ☑ Decrease ☐ **$92,810.00**

By reason of this order the time of completion will be adjusted as follows: 0 days

Submitted by		
Signature [signature]	Resident Engineer BILL CASEY	Date 7-18-09
Approval Recommended by		
Signature Deanna Vilcheck	Area Construction Manager DEANNA VILCHECK	Date 7/21/09
Engineer Approval by		
Signature Deanna Vilcheck	Area Construction Manager DEANNA VILCHECK	Date 8/13/09

We the undersigned contractor, have given careful consideration to the change proposed and agree, if this proposal is approved, that we will provide all equipment, furnish the materials, except as may otherwise be noted above, and perform all services necessary for the work above specified, and will accept as full payment therefor the prices shown above.

NOTE: If you, the contractor, do not sign acceptance of this order, your attention is directed to the requirements of the specifications as to proceeding with the ordered work and filing a written protest within the time therein specified.

Contractor Acceptance by		
Signature [signature]	(Print name and title) STEVE FRANCIS, CHIEF ESTIMATOR	Date 8-3-09

STATE OF CALIFORNIA - DEPARTMENT OF TRANSPORTATION

CONTRACT CHANGE ORDER MEMORANDUM

DATE: 7/2/2009

TO: MIKE FORNER / DEANNA VILCHECK	FILE: **E.A.** 04 - 0120R4
FROM: BILL CASEY	**CO-RTE-PM** SF-80-12.6/13.2
	FED. NO. ACBRIM-080-1(097)N
CCO#: **209** SUPPLEMENT#: **0** Category Code: **CHAB**	CONTINGENCY BALANCE (incl. this change) **$34,329,845.59**
COST: **$92,810.00** INCREASE ☑ DECREASE ☐	HEADQUARTERS APPROVAL REQUIRED? ☐ YES ☑ NO
SUPPLEMENTAL FUNDS PROVIDED: **$0.00**	IS THIS REQUEST IN ACCORDANCE WITH ENVIRONMENTAL DOCUMENTS? ☑ YES ☐ NO
CCO DESCRIPTION: VIA Steel Erection USCG Traffic Delays	**PROJECT DESCRIPTION:** CONSTRUCT ROUTE 80 TEMP BYPASS STRUCTURE

Original Contract Time:	Time Adj. This Change:	Previously Approved CCO Time Adjustments:	Percentage Time Adjusted: (including this change)	Total # of Unreconciled Deferred Time CCO(s): (including this change)
475 Day(s)	**0** Day(s)	**1195** Day(s)	**252** %	**7**

THIS CHANGE ORDER PROVIDES FOR:

compensation to the Contractor for delays and flagging costs associated with the need to allow United States Coast Guard (USCG) traffic to pass through the work site during the steel erection of the Viaduct structure.

This project, the Yerba Buena Island Detour (YBID), calls for the construction of a temporary detour for both eastbound and westbound I-80 traffic that will allow for the tie in of the new east span of the San Francisco Oakland Bay Bridge to Yerba Buena Island. The YBID encompasses three main structures, the East Tie-In to the existing bridge, the West Tie-In (WTI) to Yerba Buena Island, and the Viaduct structure between the two tie ins. The contract was awarded as a performance-based project with the contractor responsible for meeting the design criteria specified in the contract.

This change order concerns costs pertaining to delay and flagging costs associated with the USCG traffic affecting the steel erection of the Viaduct structure. The Viaduct consists of 4 spans of a double deck steel truss approximately 20 meters wide and 320 meters long with a weight of over 4,300 metric tons.

The newly erected Viaduct passes over Macalla Road that acts as the only land based access to the USCG base on Yerba Buena Island. The contract does not provide adequate provisions concerning maintaining access to the USCG during the actual steel erection of the Viaduct over the roadway. The Department initially directed the Contractor to provide flagging for this traffic and limited closures of this access to a maximum of 15 minute intervals. This change order compensates the Contractor for flagging and delay costs associated with this direction.

Eventually, Contract Change Order No. 136 was issued to construct alternative access to the Coast Guard and thus eliminate any future delays to the work.

Compensation shall be paid as an adjustment of compensation at an agreed lump sum of $92,810.00 which shall be financed from the contract's contingency funds. A detailed cost estimate is on file.

No adjustment of contract time is warranted as the work will not affect the controlling operation.

This change was concurred with by Alec Melkonians - Asst. Project Manager and Hong Wong - Project Engineer.

Maintenance concurrence is not required as this change doesn't affect any permanent roadway features.

ADA Notice: For individuals with sensory disabilities, this document is available in alternate formats. For information call: (916) 654-6410 or TDD (916) 654-3880 or write Records and Forms Management, 1120 N Street, MS-89, Sacramento, CA 95814.

CONCURRED BY:		
Construction Engineer:	Bill Casey, Resident Engineer	Date 7-18-09
Bridge Engineer:		Date
Project Engineer:	Hong Wong, PE	Date 7/13/09
Project Manager:	Alec Melkonians	Date 7/13/09
FHWA Rep.:		Date
Environmental:		Date
Other (specify):		Date
Other (specify):		Date
District Prior Approval By:		Date
HQ (Issue Approve) By:		Date
Resident Engineer's Signature:		Date 7-18-09

ESTIMATE OF COST

	THIS REQUEST	TOTAL TO DATE
ITEMS	$0.00	$0.00
FORCE ACCOUNT	$0.00	$0.00
AGREED PRICE	$0.00	$0.00
ADJUSTMENT	$92,810.00	$92,810.00
TOTAL	$92,810.00	$92,810.00

FEDERAL PARTICIPATION

☐ PARTICIPATING ☐ PARTICIPATING IN PART ☑ NONE
☐ NON-PARTICIPATING (MAINTENANCE) ☐ NON-PARTICIPATING

FEDERAL SEGREGATION (if more than one Funding Source or P.I.P. type)
☐ CCO FUNDED PER CONTRACT ☐ CCO FUNDED AS FOLLOWS

FEDERAL FUNDING SOURCE	PERCENT

ADA Notice: For individuals with sensory disabilities, this document is available in alternate formats. For information call: (916) 654-6410 or TDD (916) 654-3880 or write Records and Forms Management, 1120 N Street, MS-89, Sacramento, CA 95814.

STATE OF CALIFORNIA - DEPARTMENT OF TRANSPORTATION

CONTRACT CHANGE ORDER

Change Requested by: Engineer

CCO 210	Suppl. No. 0	Contract No. 04 - 0120R4	Road SF-80-12.6/13.2	FED. AID LOC.:

To: CC MYERS INC

You are directed to make the following changes from the plans and specifications or do the following described work not included in the plans and specifications for this contract. ***NOTE: This change order is not effective until approved by the Engineer.***

Description of work to be done, estimate of quantities and prices to be paid. (Segregate between additional work at contract price, agreed price and force account.) Unless otherwise stated, rates for rental of equipment cover only such time as equipment is actually used and no allowance will be made for idle time. This last percentage shown is the net accumulated increase or decrease from the original quantity in the Engineer's Estimate.

Extra Work at Lump Sum:

Provide compensation to the Contractor for additional costs associated with the erection of the Viaduct portion of the Temporary Bypass Structure (Bridge No. 34-0006 (TEMP)).

For this work, the Contractor shall be compensated an agreed lump sum of $147,230.00. Except any costs specifically excluded herein, this lump sum constitutes full and final compensation, including all markups, for all outstanding costs incurred by the Contractor's steel erection subcontractor, Danny's Construction Company, Inc. (DCCI), pertaining to the steel erection of the Viaduct structure.

Any outstanding DCCI costs associated with Viaduct steel erection work that is specified to be performed at force account under separate change orders are excluded from the compensation provided under this change order.

Total Cost of Extra Work at Lump Sum $147,230.00

Estimated Cost: Increase ☑ Decrease ☐ **$147,230.00**

By **reason of this order the time of completion will be adjusted as follows:** 0 days

Submitted by

Signature	Resident Engineer	Date
	BILL CASEY	12-11-09

Approval Recommended by

Signature	Area Construction Manager	Date
Deanna Vilcheck	DEANNA VILCHECK	12/16/09

Engineer Approval by

Signature	Area Construction Manager	Date
Deanna Vilcheck	DEANNA VILCHECK	1/19/10

We the undersigned contractor, have given careful consideration to the change proposed and agree, if this proposal is approved, that we will provide all equipment, furnish the materials, except as may otherwise be noted above, and perform all services necessary for the work above specified, and will accept as full payment therefor the prices shown above.

NOTE: **If you, the contractor, do not sign acceptance of this order, your attention is directed to the requirements of the specifications as to proceeding with the ordered work and filing a written protest within the time therein specified.**

Contractor Acceptance by

Signature	(Print name and title)	Date
	DANIEL E. HUMICK, PRESIDENT	1/11/10

STATE OF CALIFORNIA - DEPARTMENT OF TRANSPORTATION

CONTRACT CHANGE ORDER

Change Requested by: Engineer

CCO 211	Suppl. No. 0	Contract No. 04 - 0120R4	Road SF-80-12.6/13.2	FED. AID LOC.: ACBRIM-080-1(097)N

To: **CC MYERS INC**

You are directed to make the following changes from the plans and specifications or do the following described work not included in the plans and specifications for this contract. ***NOTE: This change order is not effective until approved by the Engineer.***

Description of work to be done, estimate of quantities and prices to be paid. (Segregate between additional work at contract price, agreed price and force account.) Unless otherwise stated, rates for rental of equipment cover only such time as equipment is actually used and no allowance will be made for idle time. This last percentage shown is the net accumulated increase or decrease from the original quantity in the Engineer's Estimate.

Extra Work at Lump Sum:

Perform all duct bank revision work as authorized by the Engineer and as shown on Sheets 2 through 5 of this change.

For this work, the Contractor will be paid the sum of $ 129,152.00, which constitutes full compensation, including all markups and incidentals for the work of this change.

Total Cost of Extra Work at Lump Sum $129,152.00

Flagging costs associated with this work shall be paid under Contract Change Order No. 1 with these costs being paid at 50% by the Department. The remaining flagging costs are considered to be included in the lump sum payments made under this change order.

The Underground Conduit Drain Detail as shown on Sheet 5 of 5 of this change is not applicable on this change.

RECEIVED
011037 SEP 23 09

Estimated Cost: Increase ☑ Decrease ☐ **$129,152.00**

By reason of this order the time of completion will be adjusted as follows: 0 days

Submitted by

Signature	Resident Engineer	Date
[signature]	BILL CASEY	7-9-09

Approval Recommended by

Signature	Area Construction Manager	Date
Deanna Vilcheck	DEANNA VILCHECK	7/9/09

Engineer Approval by

Signature	Area Construction Manager	Date
Deanna Vilcheck	DEANNA VILCHECK	8/13/09

We the undersigned contractor, have given careful consideration to the change proposed and agree, if this proposal is approved, that we will provide all equipment, furnish the materials, except as may otherwise be noted above, and perform all services necessary for the work above specified, and will accept as full payment therefor the prices shown above.

NOTE: If you, the contractor, do not sign acceptance of this order, your attention is directed to the requirements of the specifications as to proceeding with the ordered work and filing a written protest within the time therein specified.

Contractor Acceptance by

Signature	(Print name and title)	Date
[signature]	DANIEL E. HINICK, PRESIDENT	8/11/09

Dist	COUNTY	ROUTE	KILOMETER POST TOTAL PROJECT	SHEET No.	TOTAL SHEETS
04	SF	80	12.6/13.2		

Caltrans Metric

REGISTERED CIVIL ENGINEER DATE

T.T. Lai
No. 63630
Exp. 9-30-08
CIVIL
STATE OF CALIFORNIA

PLANS APPROVAL DATE

THE STATE OF CALIFORNIA OR ITS OFFICERS OR AGENTS SHALL NOT BE RESPONSIBLE FOR THE ACCURACY OR COMPLETENESS OF ELECTRONIC COPIES OF THIS PLAN SHEET.

REGISTERED PROFESSIONAL ENGINEER
ALEC MELKONIANS
C053452
Exp. 6/30/11
CIVIL
STATE OF CALIFORNIA

CONTRACT NO. 04-0120R4

CONTRACT CHANGE ORDER NO 211

SHEET 2 OF 5

MH-16
FINISH GRADE
ELEVATION = 7.654

ADVANCE CCO CONTRACT LIMIT
STATION D 1+63

D 1+63.000
Elev 5.788

Elev 5.772

Elev 5.775

Elev 5.779

D 2+41.000
Elev 5.783

D 2+45.459
Elev 6.191

D 2+49.614
Elev 6.190

OG

FG

Elev 5.098

Elev 5.101

S=0.02

Elev 5.105

Elev 5.109

S=7.42

S=1.11

600mm APC, FL=2.81 M

200mm DIP, FL=6.4 M

D 2+41.000
Elev 5.113

D 2+45.459
Elev 5.519

D 2+49.614
Elev 5.520

SEE SHEET UD-2

CONTRACT CHANGE ORDER NO. 64

SHEET --- OF ---

UTILITY DETAILS
DUCT BANK PROFILE

SCALE HORIZ 1:200
VERT 1:200

UD-1R1

ALL DIMENSIONS ARE IN METERS UNLESS OTHERWISE SHOWN

REVISED BY	DATE REVISED
A	A

CALCULATED-DESIGNED BY: A
CHECKED BY: A

FUNCTIONAL SUPERVISOR: BOB ZANDIPOUR

STATE OF CALIFORNIA - DEPARTMENT OF TRANSPORTATION
Caltrans DESIGN

Station 20 40 60 80 2+00 20 40 60
m3 Exc
m3 End

RELATIVE BORDER SCALE 0 20 40 60 80

USERNAME => $USER

BORDER LAST REVISED 3/1/2007

LAST REVISION DATE PLOTTED => $DATE
08-02-07 TIME PLOTTED => $TIME

CU 042561 EA 0120R4

UD-1R1.dgn 5/26/2009 2:17:47 PM

Dist	COUNTY	ROUTE	KILOMETER POST TOTAL PROJECT	SHEET No.	TOTAL SHEETS
04	SF	80	12.6/13.2		

REGISTERED CIVIL ENGINEER DATE

T.T. Lai
No. 63630
Exp. 9-30-08
CIVIL
REGISTERED PROFESSIONAL ENGINEER
STATE OF CALIFORNIA

PLANS APPROVAL DATE

THE STATE OF CALIFORNIA OR ITS OFFICERS OR AGENTS SHALL NOT BE RESPONSIBLE FOR THE ACCURACY OR COMPLETENESS OF ELECTRONIC COPIES OF THIS PLAN SHEET.

CONTRACT NO. 04-0120R4

CONTRACT CHANGE ORDER NO 211

SHEET 3 OF 5

REGISTERED PROFESSIONAL ENGINEER
ALEC MELKONIANS
CO53452
Exp. 6-30-11
CIVIL
STATE OF CALIFORNIA

MH - 19
FINISH GRADE
ELEVATION = 8.50

Exist 150mm FM
TOP Elev 7.2 M

D 3+39.881
Elev 5.191

D 3+43.027
Elev 4.112

D 3+57.718
Elev 6.349

D 3+73.819
Elev 9.175

FG

Elev 10.230

g=-1.11

g=7.82

g=17.59

g=10.91

SEE SHEET UD-1

SEE SHEET UD-3

D 3+39.881
Elev 3.521

D 3+43.027
Elev 4.422

D 3+55.000
Elev 5.622

D 3+57.718
Elev 5.801

D 3+73.819
Elev 8.501

Elev 9.560

450mm APC, FL=3.4 M

Exist ELECTRICAL CONCRETE DUCT BANK
12.0 KV, 4.1 KV, 2.4 KV
BOTTOM Elev 5.642 M

Exist 300mm VCP, TOP Elev 4.4 M

200mm DIP, FL 6.3 M

ALL DIMENSIONS ARE IN METERS UNLESS OTHERWISE SHOWN

UTILITY DETAILS
DUCT BANK PROFILE

SCALE HORIZ 1:200
VERT 1:200

UD-2R1

REVISED BY	DATE REVISED
A	A

CALCULATED-DESIGNED BY: A
CHECKED BY: A

FUNCTIONAL SUPERVISOR: BOB ZANDIPOUR

STATE OF CALIFORNIA - DEPARTMENT OF TRANSPORTATION
DESIGN

Station	
m^3	Exc
	Emb

CU 04251 EA 0120R4

RELATIVE BORDER SCALE IS IN MILLIMETERS 0 20 40 60 80

USERNAME => &USER
DGN FILE => &REQUEST

LAST REVISION DATE PLOTTED => &DATE
08-02-07 TIME PLOTTED => &TIME

BORDER LAST REVISED 3/1/2007

UD-2R1.dgn 5/26/2009 2:44:44 PM

DIST	COUNTY	ROUTE	KILOMETER POST TOTAL PROJECT	SHEET No.	TOTAL SHEETS
04	SF	80	12.6/13.2	27	137

Caltrans Metric

REGISTERED CIVIL ENGINEER DATE

PLANS APPROVAL DATE

THE STATE OF CALIFORNIA OR ITS OFFICERS OR AGENTS SHALL NOT BE RESPONSIBLE FOR THE ACCURACY OR COMPLETENESS OF ELECTRONIC COPIES OF THIS PLAN SHEET.

REGISTERED PROFESSIONAL ENGINEER T.T. Lai No. 63630 EXP. 9-30-08 CIVIL STATE OF CALIFORNIA

CONTRACT NO 04-0120R4

CONTRACT CHANGE ORDER NO 211

SHEET 4 OF 5

ADVANCE CCO CONTRACT LIMIT
STATION D 4+85

MH-22
TOP OF MANHOLE
ELEVATION= 18.156

200 mm WATER
200 mm WATER

SEE SHEET UD-2

Elev 12.031
Elev 11.357
Elev 14.213
Elev 13.539
Elev 14.654
Elev 13.975
Elev 16.719
Elev 16.048
Elev 17.246
Elev 16.576
Elev 17.528
Elev 16.858
Elev 17.887
Elev 17.217

D 4+33.461 Elev 16.547
D 4+33.461 Elev 15.362
D 4+36.607 Elev 16.540
D 4+36.607 Elev 15.870
D 4+24.000
D 4+24.000
D 4+50.000
D 4+50.000
D 4+74.536
D 4+74.536

FG
OG

g=10.91
g=19.92
g=5.06
g=2.61
g=0.00

Station 80 4+00 20 40 60 80 5+00

m³ Exc
m³ Emb

CONTRACT CHANGE ORDER NO. 64
SHEET ___ OF ___

UTILITY DETAILS
DUCT BANK PROFILE

SCALE HORIZ 1:200
VERT 1:200

UD-3R1

LAST REVISION 08-02-07
DATE PLOTTED => 02-AUG-2007
TIME PLOTTED => 15:33

STATE OF CALIFORNIA - DEPARTMENT OF TRANSPORTATION
Caltrans DESIGN -
FUNCTIONAL SUPERVISOR BOB ZANDIPOUR
CALCULATED-DESIGNED BY A
CHECKED BY A
REVISED BY A
DATE REVISED A

RELATIVE BORDER SCALE IS IN MILLIMETERS 0 20 40 60 80

USERNAME => tlai
DGN FILE => 40120r4b003.dgn

CU 04251 EA 0120R4

BORDER LAST REVISED 3/1/2007

Dist	COUNTY	ROUTE	KILOMETER POST TOTAL PROJECT	SHEET TOTAL No. SHEETS
04	SF	80	12.6/13.2	

REGISTERED CIVIL ENGINEER — DATE 2/14/08

REGISTERED PROFESSIONAL ENGINEER — JOHNNY KUO — No. E 60036 — Exp. 6/30/08 — CIVIL — STATE OF CALIFORNIA

PLANS APPROVAL DATE

THE STATE OF CALIFORNIA OR ITS OFFICERS OR AGENTS SHALL NOT BE RESPONSIBLE FOR THE ACCURACY OR COMPLETENESS OF ELECTRONIC COPIES OF THIS PLAN SHEET.

PB AMERICAS, Inc.
A Parsons Brinckerhoff Company
101 Second St., Suite 700
San Francisco, CA 94105-3917

CONTRACT NO. 04-0120R4

CONTRACT CHANGE ORDER NO 211

SHEET 5 OF 5

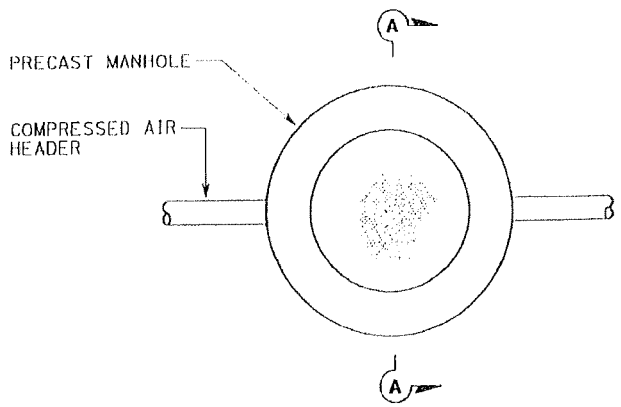

PLAN
NO SCALE

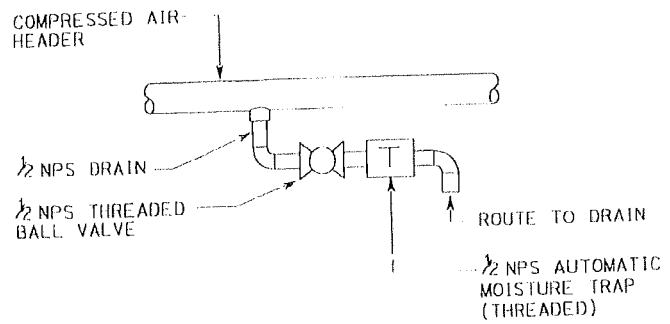

DETAIL 1
NO SCALE

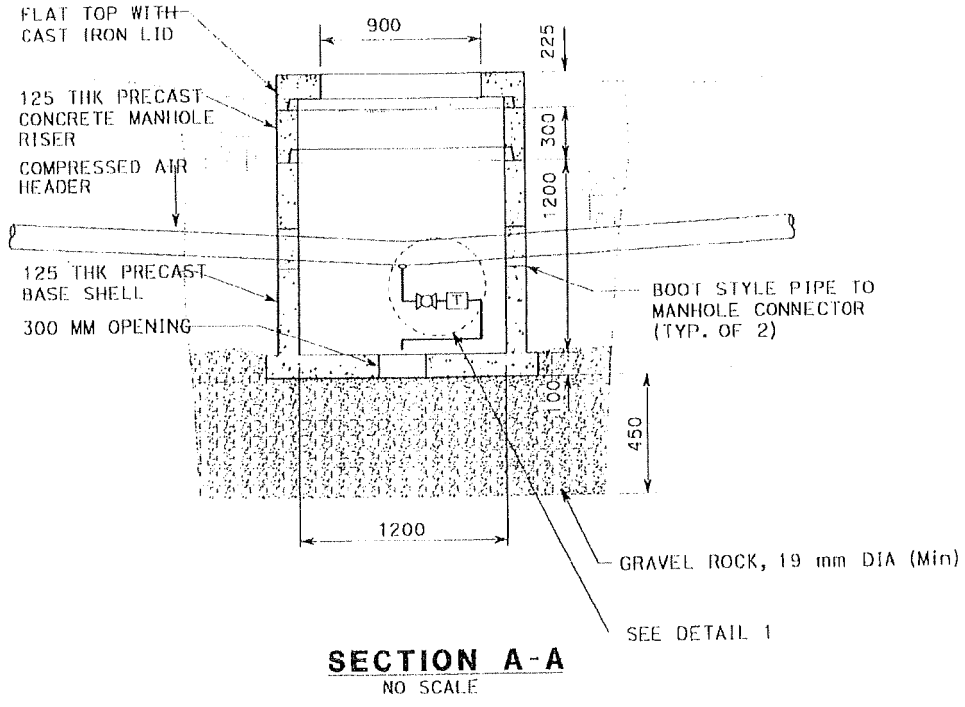

SECTION A-A
NO SCALE

COMPRESSED AIR LINE DRAIN DETAIL

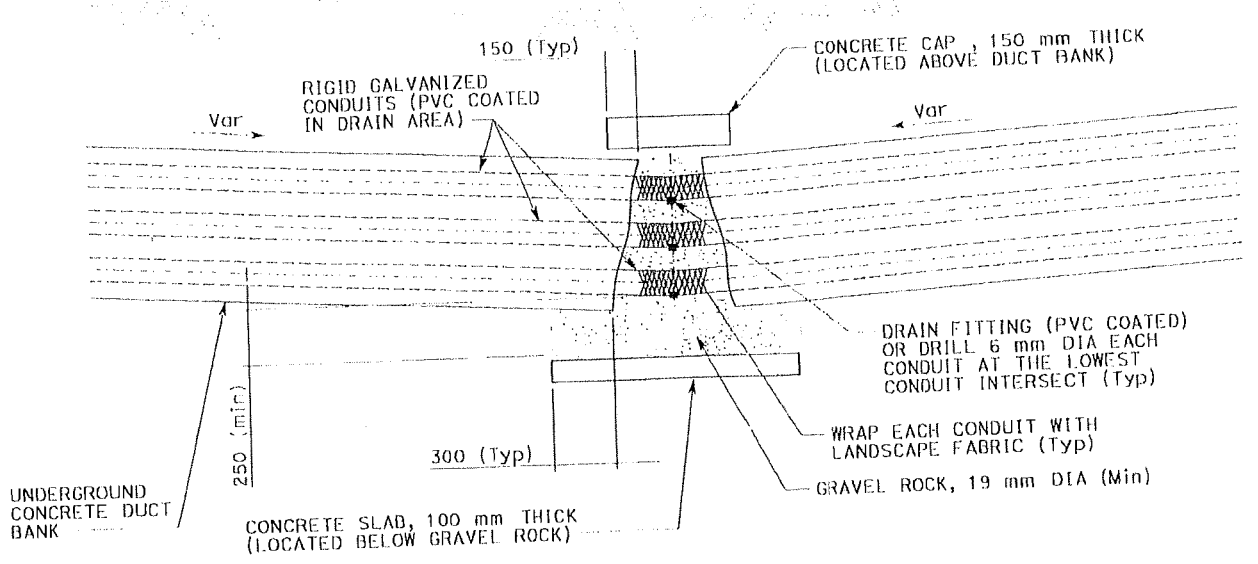

UNDERGROUND CONDUIT DRAIN DETAIL

CONTRACT CHANGE ORDER NO.
SHEET ___ OF ___

UTILITY DETAILS

NO SCALE

UD-8

ALL DIMENSIONS ARE IN MILLIMETERS UNLESS OTHERWISE SHOWN

CU 04251	EA 0120R4

LAST REVISION DATE PLOTTED => 07-APR-2008
03-20-08 TIME PLOTTED => 14:45

USERNAME => s1:1377
DGN FILE => 40120rkp008.dgn

RELATIVE BORDER SCALE IS IN MILLIMETERS 0 20 40 60 80

BORDER LAST REVISED 3/1/2007

STATE OF CALIFORNIA - DEPARTMENT OF TRANSPORTATION
Caltrans

CONSULTANT FUNCTIONAL SUPERVISOR: BOB ZANDIPOUR

CALCULATED-DESIGNED BY: H. NGUYEN
CHECKED BY: B. NADELL

REVISED BY
DATE REVISED

STATE OF CALIFORNIA - DEPARTMENT OF TRANSPORTATION

CONTRACT CHANGE ORDER MEMORANDUM

DATE: 6/30/2009 Page 1 of 1

TO: MIKE FORNER / DEANNA VILCHECK	FILE: E.A. 04 - 0120R4
FROM: BILL CASEY	CO-RTE-PM SF-80-12.6/13.2
	FED. NO. ACBRIM-080-1(097)N
CCO#: 211 SUPPLEMENT#: 0 Category Code: CCPV	CONTINGENCY BALANCE (incl. this change) $35,029,005.59
COST: $129,152.00 INCREASE ☑ DECREASE ☐	HEADQUARTERS APPROVAL REQUIRED? ☐ YES ☑ NO
SUPPLEMENTAL FUNDS PROVIDED: $0.00	IS THIS REQUEST IN ACCORDANCE WITH ENVIRONMENTAL DOCUMENTS? ☑ YES ☐ NO
CCO DESCRIPTION: Duct Bank Work	**PROJECT DESCRIPTION:** CONSTRUCT ROUTE 80 TEMP BYPASS STRUCTURE

Original Contract Time:	Time Adj. This Change:	Previously Approved CCO Time Adjustments:	Percentage Time Adjusted: (including this change)	Total # of Unreconciled Deferred Time CCO(s): (including this change)
475 Day(s)	0 Day(s)	1195 Day(s)	252 %	7

THIS CHANGE ORDER PROVIDES FOR:

compensating the Contractor for performing all duct bank revision work as shown on Sheets 2 through 5 of this change.

This project, the Yerba Buena Island Detour (YBID), was awarded in March 2004 to construct a detour that will allow for the tie in of the new east span of the San Francisco Oakland Bay Bridge to Yerba Buena Island. The YBID encompasses three main structures, the East Tie-In to the existing bridge, the West Tie-In (WTI) to Yerba Buena Island, and the Viaduct structure between the two tie ins.

The Department issued a December 25, 2006 strategy memo which was approved by Tony Anziano (Toll Bridge Program Manager), Richard Land (Chief Engineer), and subsequently by the Toll Bridge Oversight Committee (TBPOC) that called for the advance construction of foundation work for the Yerba Buena Island Transition Structure (YBITS) under this contract. The work included the construction of several footings, columns, miscellaneous drainage, roadway and electrical facilities.

This change order is necessary to provide details to the compressed air line drain, the underground conduit drain, and to correct the duct bank profile. This change was requested by Trinh Lai - Office of Toll Bridge Design, per memorandum dated April 7, 2008.

Compensation for this work shall be paid for as extra work at an agreed lump sum price of $129,152.00, which shall be financed from the contract's contingency funds. A cost analysis is on file.

No adjustment of contract time is warranted as the work will not affect the controlling operation.

This change was concurred with by Alec Melkonians - Asst. Project Manager, Hong Wong - Project Engineer, and Lina Ellis - Maintenance.

CONCURRED BY:		
Construction Engineer:	Jeannie Balderramos	Date 7/9/09
Bridge Engineer:		Date
Project Engineer:	Hong Wong, PE	Date 7/1/09
Project Manager:	Alec Melkonians	Date 6/30/09
FHWA Rep.:		Date
Environmental:		Date
Other (specify):	Lina Ellis, Maintenance	Date 7-15-09
Other (specify):		Date
District Prior Approval By:		Date
HQ (Issue Approve) By:		Date
Resident Engineer's Signature:		Date 7-9-09

ESTIMATE OF COST

	THIS REQUEST	TOTAL TO DATE
ITEMS	$0.00	$0.00
FORCE ACCOUNT	$0.00	$0.00
AGREED PRICE	$129,152.00	$129,152.00
ADJUSTMENT	$0.00	$0.00
TOTAL	$129,152.00	$129,152.00

FEDERAL PARTICIPATION

☐ PARTICIPATING ☐ PARTICIPATING IN PART ☑ NONE
☐ NON-PARTICIPATING (MAINTENANCE) ☐ NON-PARTICIPATING

FEDERAL SEGREGATION (if more than one Funding Source or P.I.P. type)
☐ CCO FUNDED PER CONTRACT ☐ CCO FUNDED AS FOLLOWS

FEDERAL FUNDING SOURCE	PERCENT

ADA Notice: For individuals with sensory disabilities, this document is available in alternate formats. For information call: (916) 654-6410 or TDD (916) 654-3880 or write Records and Forms Management, 1120 N Street, MS-89, Sacramento, CA 95814.

CONTRACT CHANGE ORDER

Change Requested by: Engineer

CCO 212	Suppl. No. 0	Contract No. 04 - 0120R4	Road SF-80-12.6/13.2	FED. AID LOC.: ACBRIM-080-1(097)N

To: **CC MYERS INC**

You are directed to make the following changes from the plans and specifications or do the following described work not included in the plans and specifications for this contract. ***NOTE: This change order is not effective until approved by the Engineer.***

Description of work to be done, estimate of quantities and prices to be paid. (Segregate between additional work at contract price, agreed price and force account.) Unless otherwise stated, rates for rental of equipment cover only such time as equipment is actually used and no allowance will be made for idle time. This last percentage shown is the net accumulated increase or decrease from the original quantity in the Engineer's Estimate.

Extra Work at Lump Sum:

Perform demolition of existing structure in preparation for the roll out and roll in of Span YB4 over the Labor Day Weekend 2009 bridge closure, as described here, in accordance with the attached Sheets 3 through 9 of this change order (Sheets 131C, 131D, 131E, 131F, 131G, 158R2, and 163R1 of 214).

1) Remove upper deck, joists and stringers at Pier E1 between floor beams U35 and U36 per sheet 131C and 131G. Remove lower deck, joists and stringers at Pier E1 between floor beams L35 and L36 per sheet 131E and 131G.
2) Remove the upper deck joint at Pier YB4 between floor beams U26 and U27. Remove the bracing on one side of the joint to provide minimum of 100 mm clearance per sheet 131C and 131G. Remove the lower deck joint at Pier YB4 between floor beams L26 and L27 (this Lower Deck work is not shown on these drawings). Remove the bracing on one side of the joint to provide minimum of 100 mm clearance (similar to that shown for the upper deck at Section C-C on sheet 131G).
3) Sawcut a transverse joint 25 mm wide at panel point L31 per sheet 131E and 131F.
4) At 8 locations on the upper deck, remove portion of the concrete deck per Detail 1 on Sheet 131D. This scope does not include cutting the flange (as shown in Detail 1). The locations included are at each end of floor beams U30, U31, U32 and U34 as shown on Sheet 131C. This scope does not include Detail 1 work at the 4 locations shown at floor beams U27 and U35.
5) At 2 locations (North and South ends of Floor Beam L31) on the lower deck, cut the existing steel curb and barrier (as shown in Detail 2 on sheet 131F). This scope does not include cutting the flange (as shown in Detail 2). This scope does not include any Detail 2 work at the 4 additional locations shown on drawing 131E at floor beams L27, L30, L32, and L35.

The following items of work are not specifically shown on these CCO drawings, but are included in the scope of work of this lump sum amount:

1) Remove existing concrete bolsters at Pier E1 to allow sufficient clearance for rollout. This work to be completed during regular work shifts prior to the rollout.
2) Perform exploratory chipping in the area of Pier E1 bearing pads. This work to be completed during regular work shifts prior to the rollout.
3) Remove and reinstall the existing pin restrainer nuts from Pier E1 and Bent YB4.
4) Cut the bearing shoes at Piers E1 and YB4 per Caltrans YB4 Roll Out Procedures.
5) Remove sufficient portions of the bearing shoes at Pier E1 to allow for installation of the new bearings.
6) Cut the existing piping, utilities, and miscellaneous items at Piers E1 and YB4 to allow roll out and roll in clearance.

The following items are not included in the scope of this lump sum amount:

1) Layout or verification of minimum gaps or clearances.
2) Work related to the actual lifting or rolling of Span YB4.
3) Installation or operation of localized jacks at the bearing shoes.
4) Steel plates over openings or providing handrails at edge of openings.
5) Providing platforms to access the work.
6) Providing protective covers or otherwise limiting access below the work area through the use of spotters, fencing, or other means.

The work being done under this lump sum agreement includes the cost to perform the work per the Contractor's (or Subcontractor's) approved Lead Compliance Plan.

CONTRACT CHANGE ORDER

Change Requested by: Engineer

CCO 212	Suppl. No. 0	Contract No. 04 - 0120R4	Road SF-80-12.6/13.2	FED. AID LOC.: ACBRIM-080-1(097)N

The lump sum agreed price anticipates starting at the beginning of the Labor Day shutdown, and working in an expedited manner with multiple crews continuously until the work is done, and includes the cost of any adverse impacts to productivity and efficiency, as well as all compensation for working nights, Saturdays, Sundays, and Holidays as necessary to perform this work.

The equipment provided for this work are to include (at a minimum):
4 each 70,000 pound (minimum) excavators with breakers (3 plus one backup unit)
4 each 50,000 pound (minimum) excavators with breakers
4 each bobcat loaders with attachments
1 each rubber tire loader
2 each water trucks
8 each end dump trucks

This change order price includes full compensation for any required testing and legal disposal of debris materials generated during the work.

For this extra work, the Contractor will be compensated $209,720. This lump sum constitutes full compensation, including markups, for furnishing all labor, material, tools, equipment, and incidentals for doing the work involved in this change.

Total Cost of Extra Work at Lump Sum $209,720.00

Any additional demolition work that is ordered by the Engineer (either on these drawings, or in addition to the work shown on these drawings) for the roll out or roll in that is not included in this lump sum, will be done under the force account

RECEIVED
2009 OCT -8 PM 1:09

Estimated Cost: Increase ☑ Decrease ☐ **$209,720.00**

By reason of this order the time of completion will be adjusted as follows: Deferred

Submitted by		
Signature	**Resident Engineer** BILL CASEY	**Date** 9-1-09
Approval Recommended by		
Signature Deanna Vilcheck	**Area Construction Manager** DEANNA VILCHECK	**Date** 9/1/09
Engineer Approval by		
Signature Deanna Vilcheck	**Area Construction Manager** DEANNA VILCHECK	**Date** 10/7/09

We the undersigned contractor, have given careful consideration to the change proposed and agree, if this proposal is approved, that we will provide all equipment, furnish the materials, except as may otherwise be noted above, and perform all services necessary for the work above specified, and will accept as full payment therefor the prices shown above.

NOTE: If you, the contractor, do not sign acceptance of this order, your attention is directed to the requirements of the specifications as to proceeding with the ordered work and filing a written protest within the time therein specified.

Contractor Acceptance by		
Signature	**(Print name and title)** DANIEL E. HANCK, PRESIDENT	**Date** 10/02/09

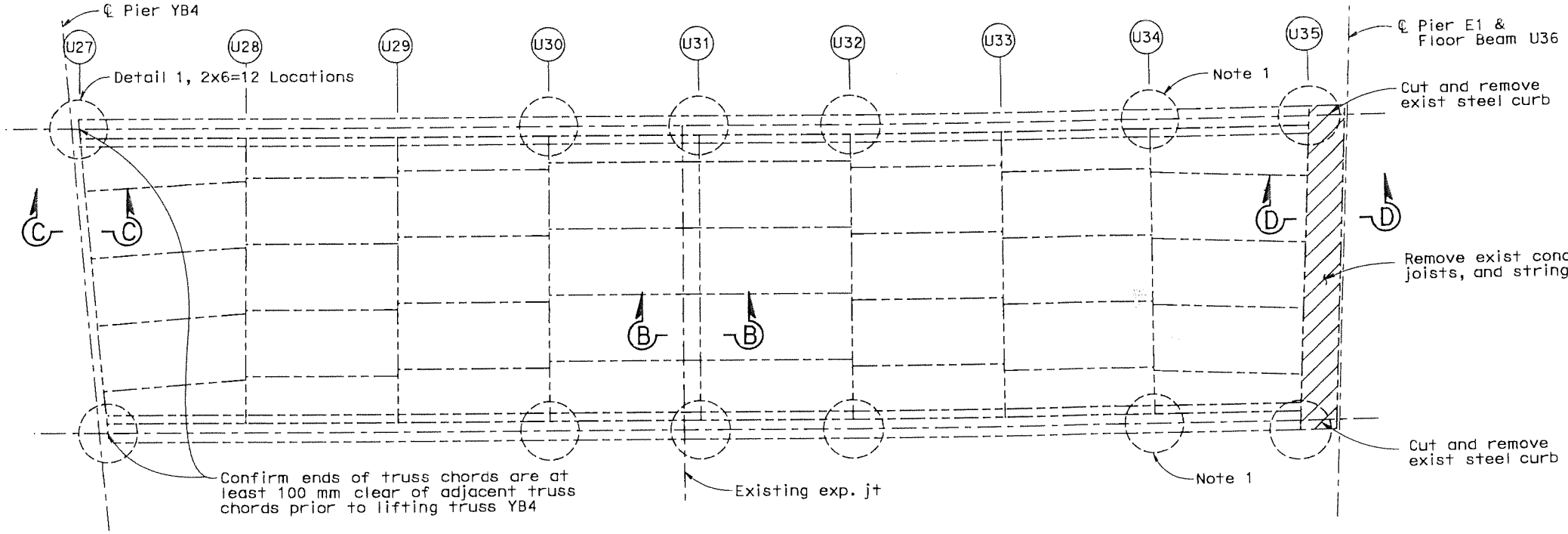

EXISTING YB4 TRUSS UPPER DECK WORK PRIOR TO LIFT (Joists not shown for clarity)

1:200

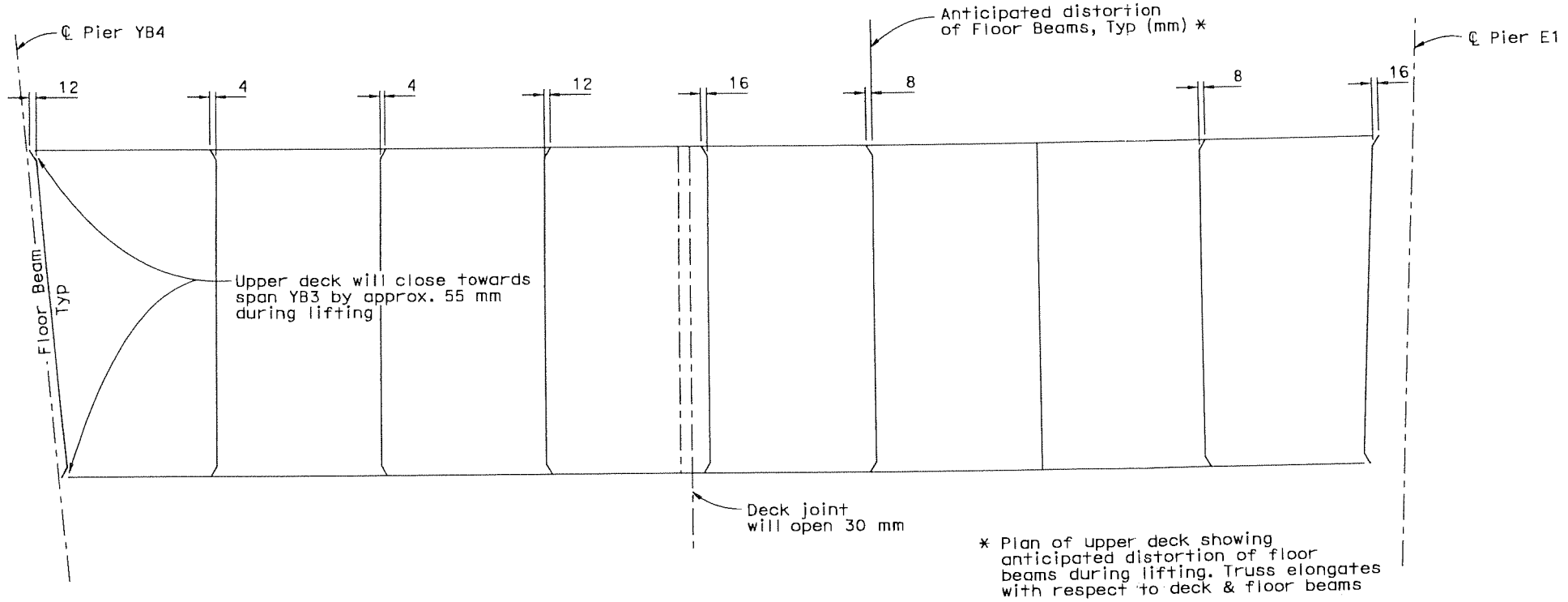

DEFLECTION DIAGRAM

1:200

DIST	COUNTY	ROUTE	KILOMETER POST TOTAL PROJECT	SHEET No	TOTAL
04	SF	80	12.6/13.2		

REGISTERED CIVIL ENGINEER

06-19-09
PLANS APPROVAL DATE

REGISTERED PROFESSIONAL ENGINEER — Richard V. Nutt — No. C 20665 — Exp. 9/30/09 — CIVIL — STATE OF CALIFORNIA

The State of California or its officers or agents shall not be responsible for the accuracy or completeness of electronic copies of this plan sheet.

T.Y. LIN / MOFFATT & NICHOL
Two Harrison Street, Suite 500
San Francisco, CA 94105

CONTRACT NO. 04-0120R4

CONTRACT CHANGE ORDER NO 212

SHEET 3 OF 9

Notes:

1. Local removal of steel curb is required to obtain access to deck concrete for breakout. See Detail 1 on "Existing Truss Details No. 14" sheet.
2. For Section B-B, see "Existing Truss Details No. 14" sheet.
3. For Section C-C & D-D, see "Existing Truss Details No. 17" sheet.

ALL DIMENSIONS ARE IN MILLIMETERS UNLESS OTHERWISE SHOWN

T. Ostrom/M. Whiteside/A. Akinsanya		
DESIGN OVERSIGHT		
SIGN OFF DATE		
DESIGN	BY J. Otter, R. Nutt	CHECKED M. Chen
DETAILS	BY P. Zhao, S. Lee	CHECKED A. Lee
QUANTITIES	BY H. Nelson	CHECKED A. Lee

PREPARED FOR THE STATE OF CALIFORNIA DEPARTMENT OF TRANSPORTATION

A.M. Lee — PROJECT ENGINEER
S. Abbas — PROJECT MANAGER

BRIDGE NO. 34-0006 (TEMP)
KILOMETER POST 12.6

SAN FRANCISCO OAKLAND BAY BRIDGE
EAST SPAN SEISMIC SAFETY PROJECT

EAST TIE-IN

EXISTING TRUSS DETAILS NO. 13

DESIGN DETAIL SHEET (METRIC) (REV. 3/1/98)
DATE *TIME* Pen Table File

ORIGINAL SCALE IN MILLIMETERS FOR REDUCED PLANS 0 10 20 30 40 50 60 70 80 90 100

CU
EA 0120R4

DISREGARD PRINTS BEARING EARLIER REVISION DATES

REVISION DATES (PRELIMINARY STAGE ONLY): 11/20/08 2/20/09 6/19/09

SHEET 131C OF 214

FILE => p:\bb\04-012001\etj\revision-6_19_09\dgn\etd13.dgn
TIME PLOTTED => 11:40:41 AM
DATE PLOTTED => 6/19/2009
USERNAME => ALee

100% PS&E

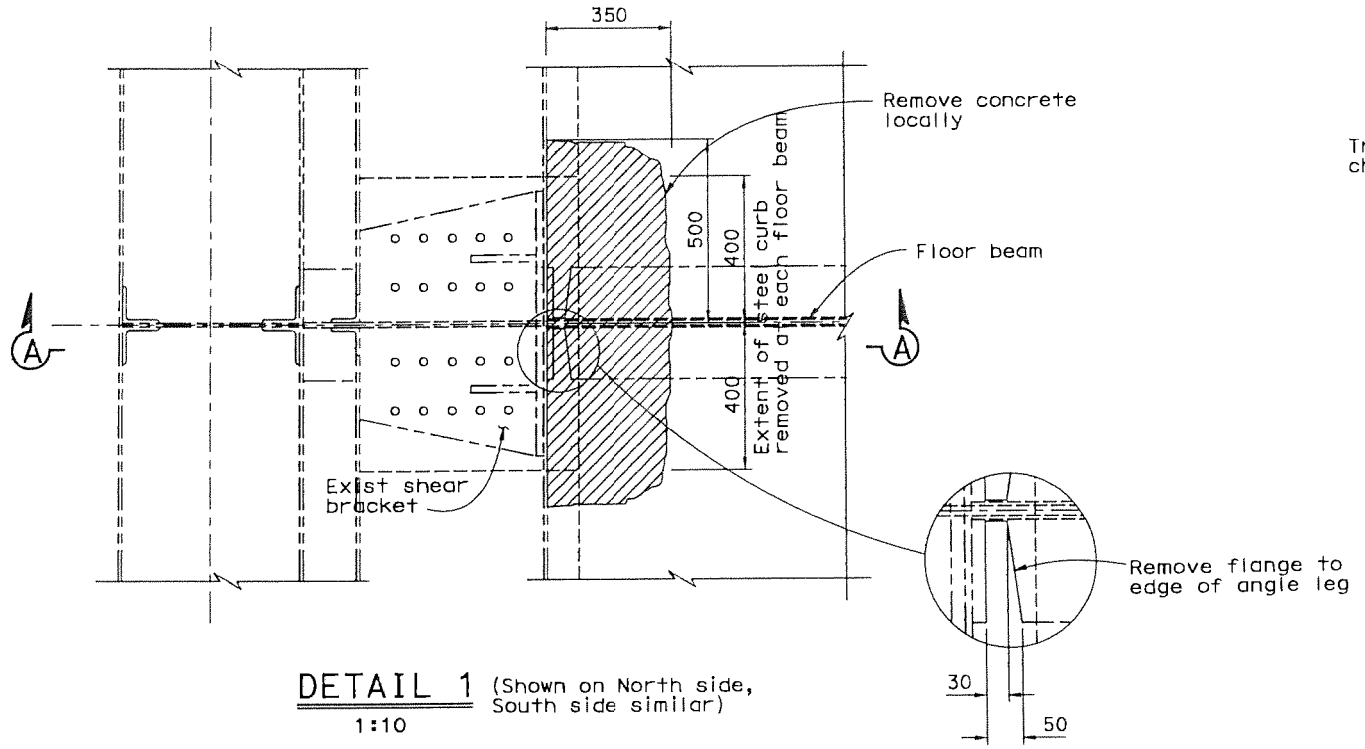

DETAIL 1 (Shown on North side, South side similar)

1:10

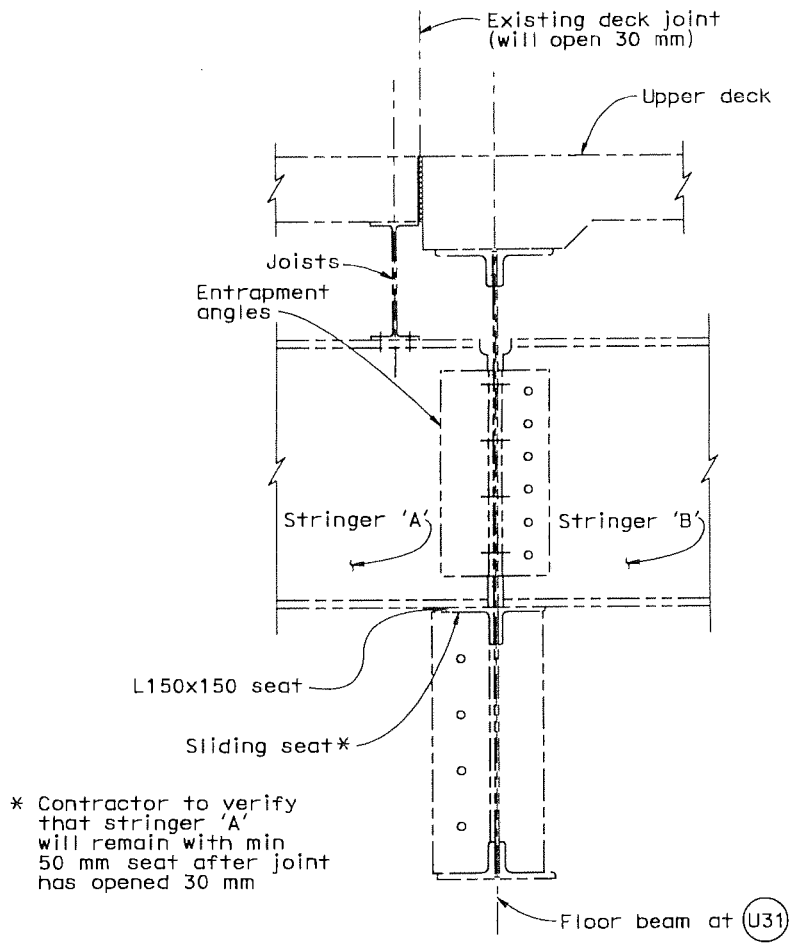

SECTION B-B

1:10

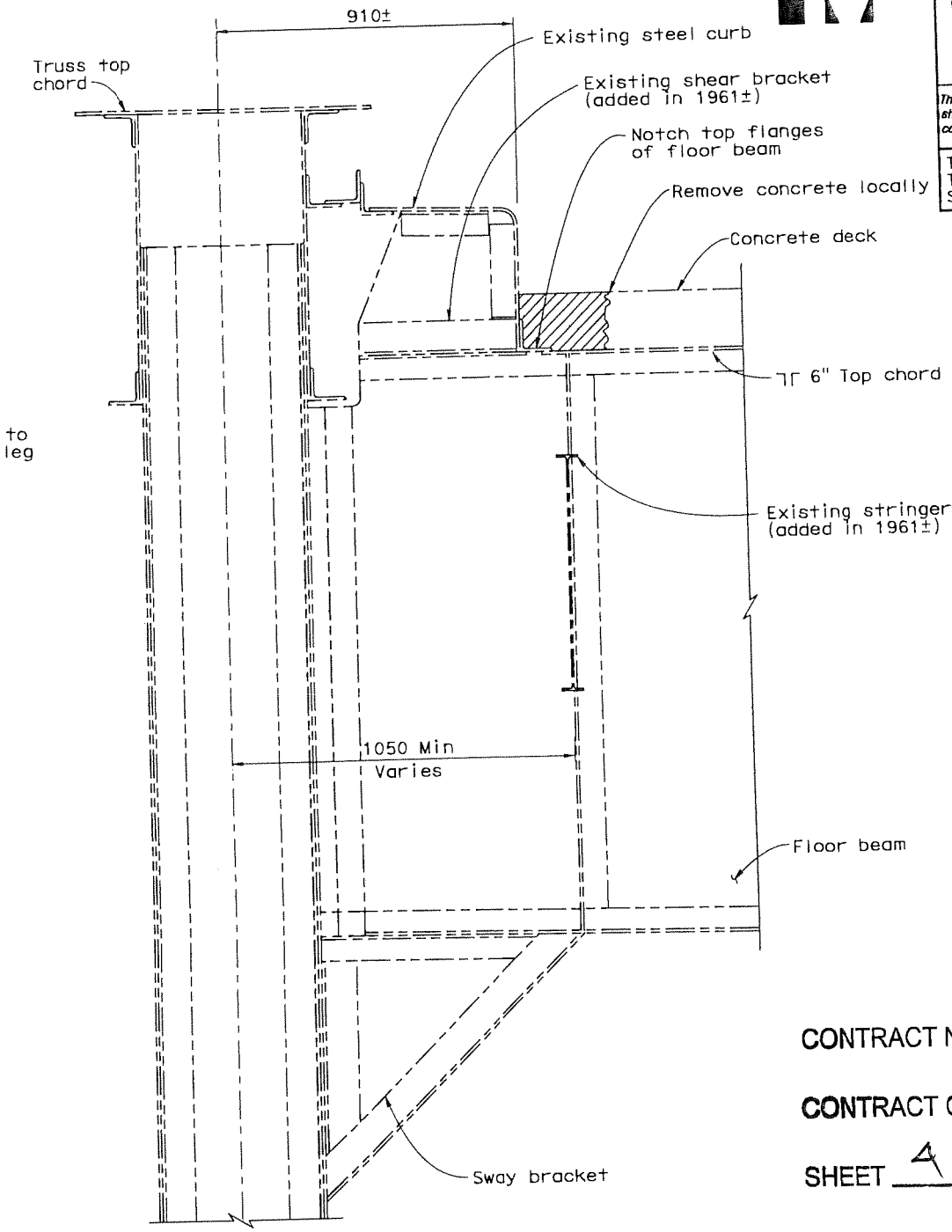

SECTION A-A (Shown on North side, South side similar)

1:10

DIST	COUNTY	ROUTE	KILOMETER POST TOTAL PROJECT	SHEET No	TOTAL
04	SF	80	12.6/13.2		

REGISTERED CIVIL ENGINEER

06-19-09

PLANS APPROVAL DATE

REGISTERED PROFESSIONAL ENGINEER — Richard Y. Nutt — No. C 20665 — Exp. 9/30/09 — CIVIL — STATE OF CALIFORNIA

The State of California or its officers or agents shall not be responsible for the accuracy or completeness of electronic copies of this plan sheet.

T.Y. LIN / MOFFATT & NICHOL
Two Harrison Street, Suite 500
San Francisco, CA 94105

100% PS&E

CONTRACT NO. 04-0120R4

CONTRACT CHANGE ORDER NO 212

SHEET 4 OF 9

FILE => p:\bb\04-012001\etl\revision-6_19_09\aletd20.dgn
TIME PLOTTED => 11:40:43 AM
DATE PLOTTED => 6/19/2009
USERNAME => ALee

ALL DIMENSIONS ARE IN MILLIMETERS UNLESS OTHERWISE SHOWN

SAN FRANCISCO OAKLAND BAY BRIDGE
EAST SPAN SEISMIC SAFETY PROJECT

EAST TIE-IN

EXISTING TRUSS DETAILS NO. 14

DESIGN OVERSIGHT	T. Ostrom/M. Whiteside/A. Akinsanya		
SIGN OFF DATE			
DESIGN	J. Otter, R. Nutt	CHECKED	M. Chen
DETAILS	P. Zhao, S. Lee	CHECKED	A. Lee
QUANTITIES	H. Nelson	CHECKED	A. Lee

PREPARED FOR THE STATE OF CALIFORNIA DEPARTMENT OF TRANSPORTATION

A.M. Lee — PROJECT ENGINEER
S. Abbas — PROJECT MANAGER

CU 04 EA 0120R4

BRIDGE NO. 34-0006 (TEMP)
KILOMETER POST 12.6

DISREGARD PRINTS BEARING EARLIER REVISION DATES

REVISION DATES (PRELIMINARY STAGE ONLY): 11/20/07 | 2/26/09 | 6/19/09

SHEET 131D OF 214

DESIGN DETAIL SHEET (METRIC) (REV. 3/1/98)
●DATE● ●TIME● Pen Table File

ORIGINAL SCALE IN MILLIMETERS FOR REDUCED PLANS 0 10 20 30 40 50 60 70 80 90 100

FILE => p:\bb\04-012001\etl\revision-6_19_09\aletd20.dgn

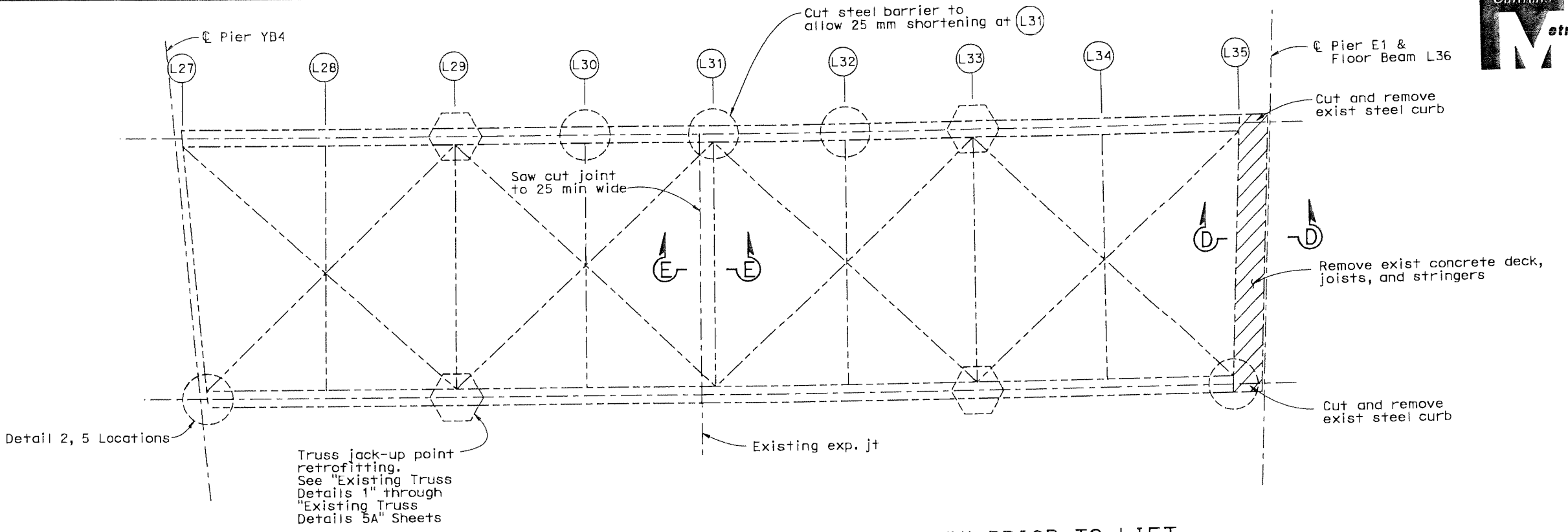

EXISTING YB4 TRUSS LOWER DECK WORK PRIOR TO LIFT

1:200

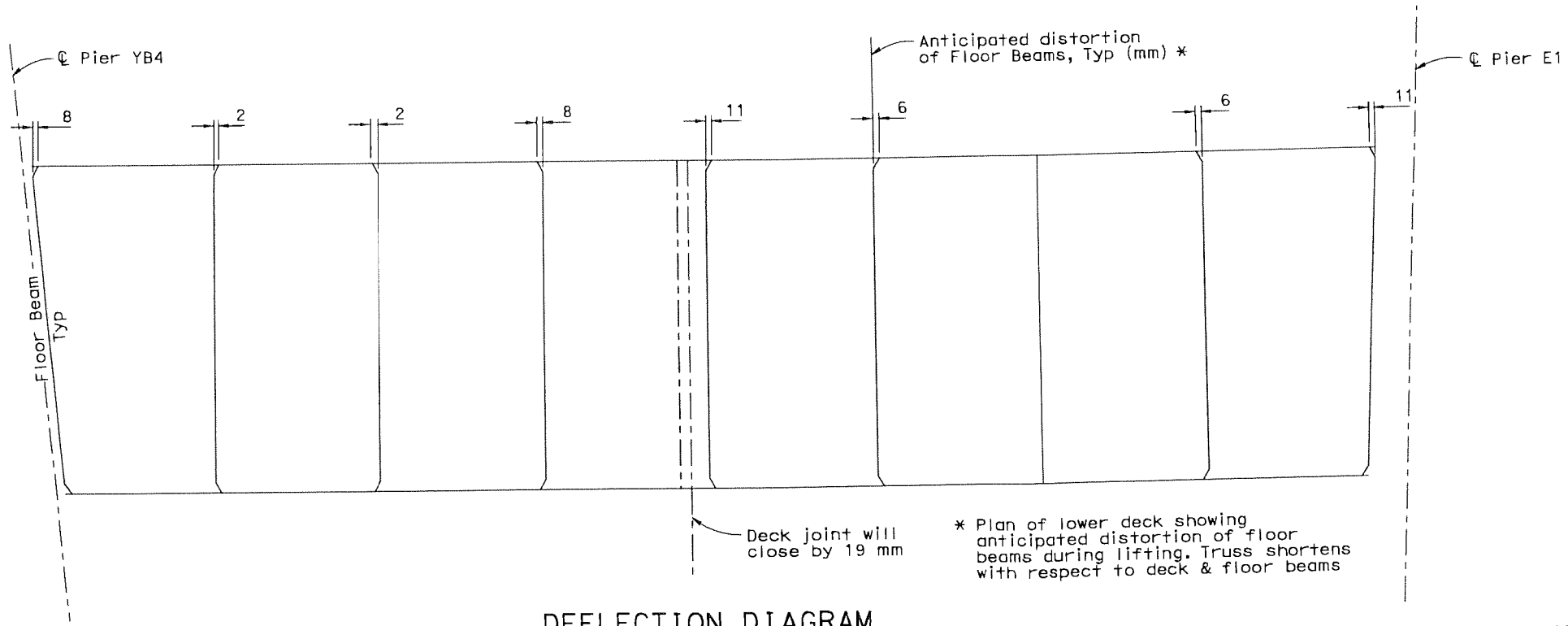

DEFLECTION DIAGRAM

1:200

DIST	COUNTY	ROUTE	KILOMETER POST TOTAL PROJECT	SHEET No	TOTAL
04	SF	80	12.6/13.2		

REGISTERED CIVIL ENGINEER

06-19-09
PLANS APPROVAL DATE

REGISTERED PROFESSIONAL ENGINEER — Richard V. Nutt — No. C 20665 — Exp. 9/30/09 — CIVIL — STATE OF CALIFORNIA

The State of California or its officers or agents shall not be responsible for the accuracy or completeness of electronic copies of this plan sheet.

T.Y. LIN / MOFFATT & NICHOL
Two Harrison Street, Suite 500
San Francisco, CA 94105

CONTRACT NO. 04-0120R4

CONTRACT CHANGE ORDER NO 212

SHEET 5 OF 9

Notes:

1. For Section D-D, see "Existing Truss Details No. 17" sheet.
2. For Detail 2 and Section E-E, see "Existing Truss Details No. 16" sheet.

100% PS&E

FILE => p:\bb\04-012001\eti\revision-6_19_09\aletd21.dgn
TIME PLOTTED => 11:40:40 AM
DATE PLOTTED => 6/19/2009
USERNAME => ALee

T. Ostrom/M. Whiteside/A. Akinsanya
DESIGN OVERSIGHT

SIGN OFF DATE

	BY	CHECKED
DESIGN	J. Otter, R. Nutt	M. Chen
DETAILS	P. Zhao, S. Lee	A. Lee
QUANTITIES	H. Nelson	A. Lee

PREPARED FOR THE STATE OF CALIFORNIA DEPARTMENT OF TRANSPORTATION

A.M. Lee
PROJECT ENGINEER
S. Abbas
PROJECT MANAGER

CU
EA 0120R4

ALL DIMENSIONS ARE IN MILLIMETERS UNLESS OTHERWISE SHOWN

ORIGINAL SCALE IN MILLIMETERS FOR REDUCED PLANS 0 10 20 30 40 50 60 70 80 90 100

DESIGN DETAIL SHEET (METRIC) (REV. 3/1/98)
●DATE● ●TIME● Pen Table File

FILE => p:\bb\04-012001\eti\revision-6_19_09\aletd21.dgn

BRIDGE NO. 34-0006 (TEMP)
KILOMETER POST 12.6

SAN FRANCISCO OAKLAND BAY BRIDGE
EAST SPAN SEISMIC SAFETY PROJECT

EAST TIE-IN

EXISTING TRUSS DETAILS NO. 15

DISREGARD PRINTS BEARING EARLIER REVISION DATES →

REVISION DATES (PRELIMINARY STAGE ONLY): 11/09/01 2/24/09 6/19/09

SHEET 131E OF 214

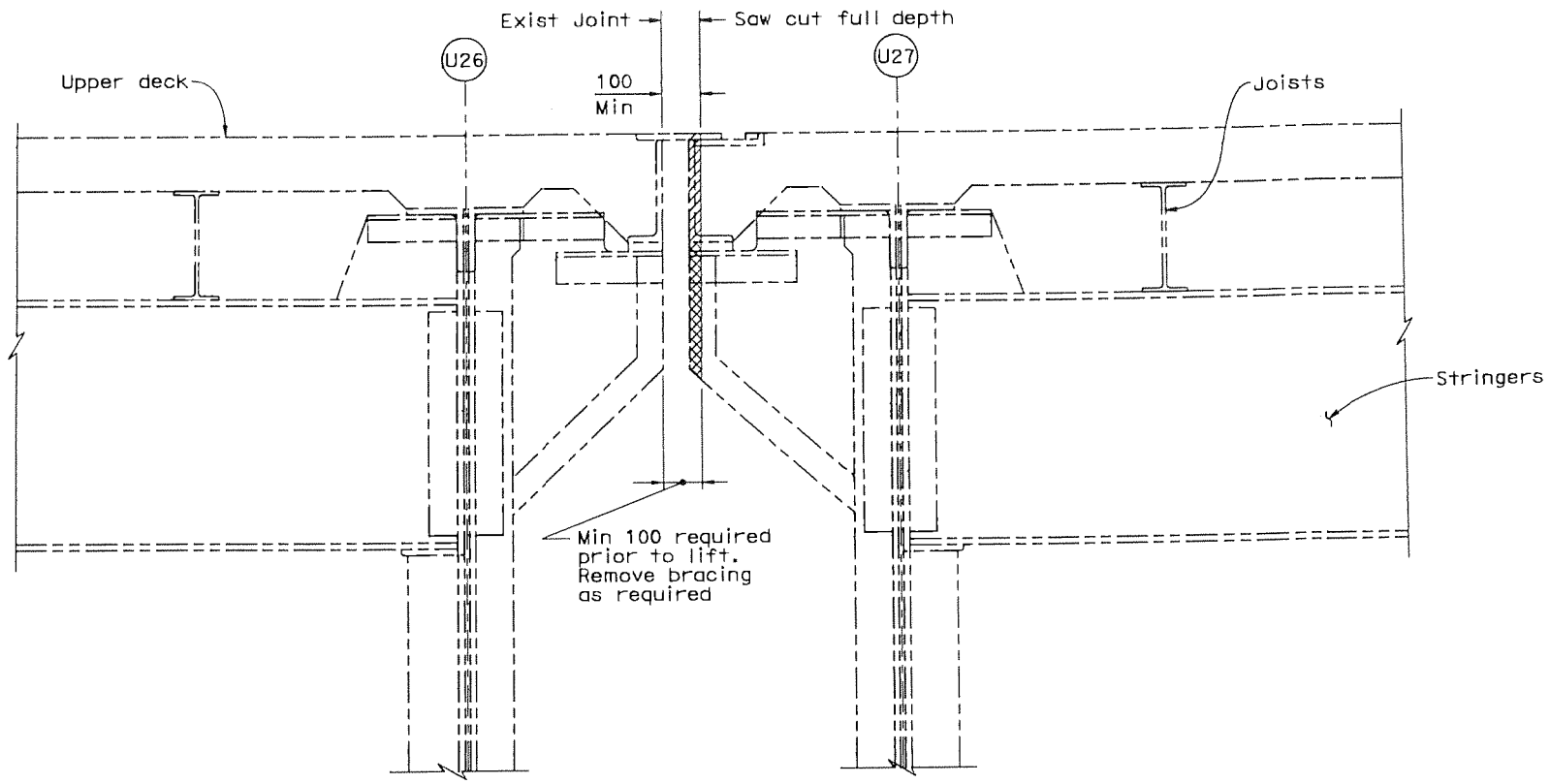

SECTION C-C

1:10

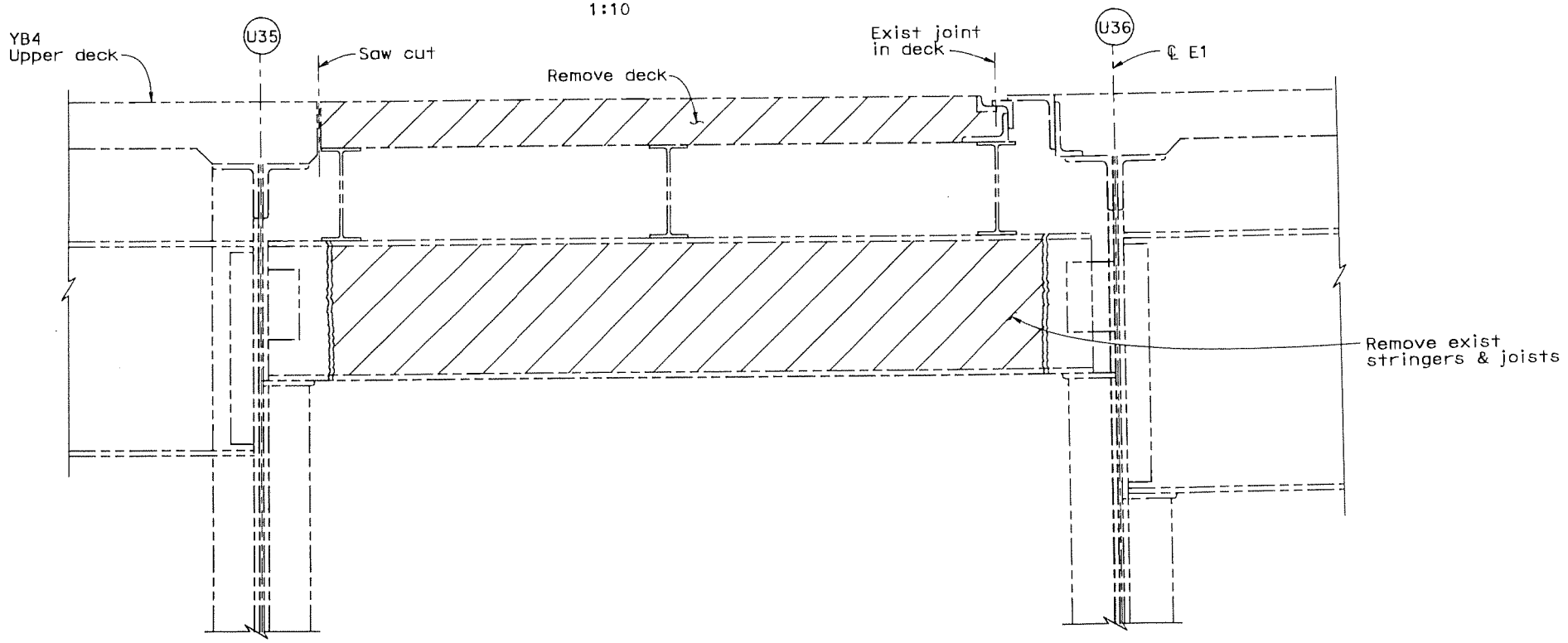

SECTION D-D (Upper deck shown, lower deck similar)

1:10

DIST	COUNTY	ROUTE	KILOMETER POST TOTAL PROJECT	SHEET No	TOTAL
04	SF	80	12.6/13.2		

Caltrans Metric

REGISTERED CIVIL ENGINEER

06-19-09
PLANS APPROVAL DATE

REGISTERED PROFESSIONAL ENGINEER
Richard V. Nutt
No. C 20665
Exp. 9/30/09
CIVIL
STATE OF CALIFORNIA

The State of California or its officers or agents shall not be responsible for the accuracy or completeness of electronic copies of this plan sheet.

T.Y. LIN / MOFFATT & NICHOL
Two Harrison Street, Suite 500
San Francisco, CA 94105

100% PS&E

FILE => p:\bb\04-012001\eti\revision-6_19_09\oletd27.dgn
TIME PLOTTED => 11:40:47 AM
DATE PLOTTED => 6/19/2009
USERNAME => ALee

CONTRACT NO. 04-0120R4

CONTRACT CHANGE ORDER NO 212

SHEET 7 OF 9

ALL DIMENSIONS ARE IN MILLIMETERS UNLESS OTHERWISE SHOWN

SAN FRANCISCO OAKLAND BAY BRIDGE
EAST SPAN SEISMIC SAFETY PROJECT

EAST TIE-IN

EXISTING TRUSS DETAILS NO. 17

DESIGN	BY J. Otter, R. Nutt	CHECKED M. Chen	PREPARED FOR THE STATE OF CALIFORNIA DEPARTMENT OF TRANSPORTATION
DETAILS	BY P. Zhao, S. Lee	CHECKED A. Lee	
QUANTITIES	BY H. Nelson	CHECKED A. Lee	

T. Ostrom/M. Whiteside/A. Akinsanya
DESIGN OVERSIGHT

SIGN OFF DATE

A.M. Lee
PROJECT ENGINEER

S. Abbas
PROJECT MANAGER

CU
EA 0120R4

BRIDGE NO. 34-0006 (TEMP)
KILOMETER POST 12.6

DISREGARD PRINTS BEARING EARLIER REVISION DATES →

REVISION DATES (PRELIMINARY STAGE ONLY) 2/26/09 6/19/09

SHEET 131G OF 214

DESIGN DETAIL SHEET (METRIC) (REV. 3/1/98)
●DATE● ●TIME● Pen Table File

ORIGINAL SCALE IN MILLIMETERS FOR REDUCED PLANS 0 10 20 30 40 50 60 70 80 90 100

FILE => p:\bb\04-012001\eti\revision-6_19_09\oletd27.dgn

DIST	COUNTY	ROUTE	KILOMETER POST TOTAL PROJECT	SHEET No	TOTAL
04	SF	80	12.6/13.2		

Caltrans Metric

Madan K. Sah
REGISTERED CIVIL ENGINEER

8-18-08
PLANS APPROVAL DATE

REGISTERED PROFESSIONAL ENGINEER — Madan Kumar Sah — No. C59203 — Exp. 06/30/09 — CIVIL — STATE OF CALIFORNIA

The State of California or its officers or agents shall not be responsible for the accuracy or completeness of electronic copies of this plan sheet.

T.Y. LIN / MOFFATT & NICHOL
Two Harrison Street, Suite 500
San Francisco, CA 94105

CONTRACT NO. 04-0120R4

CONTRACT CHANGE ORDER NO 212

SHEET 8 OF 9

Notes:

1. For work required to existing truss YB4, see "Existing Truss Details" sheets.
2. For pickup & movement steps for existing truss YB4 & for associated displacements, see "YB4 Truss Roll-Out Procedures" sheets.
3. Detailed operational procedures for lifting, moving & monitoring are to be developed by the Contractor & approved by the Engineer.
4. For Section B-B, see "Roll-Out Roll-In Operation Sequence No. 3" sheet.

SECTION D-D
1:100

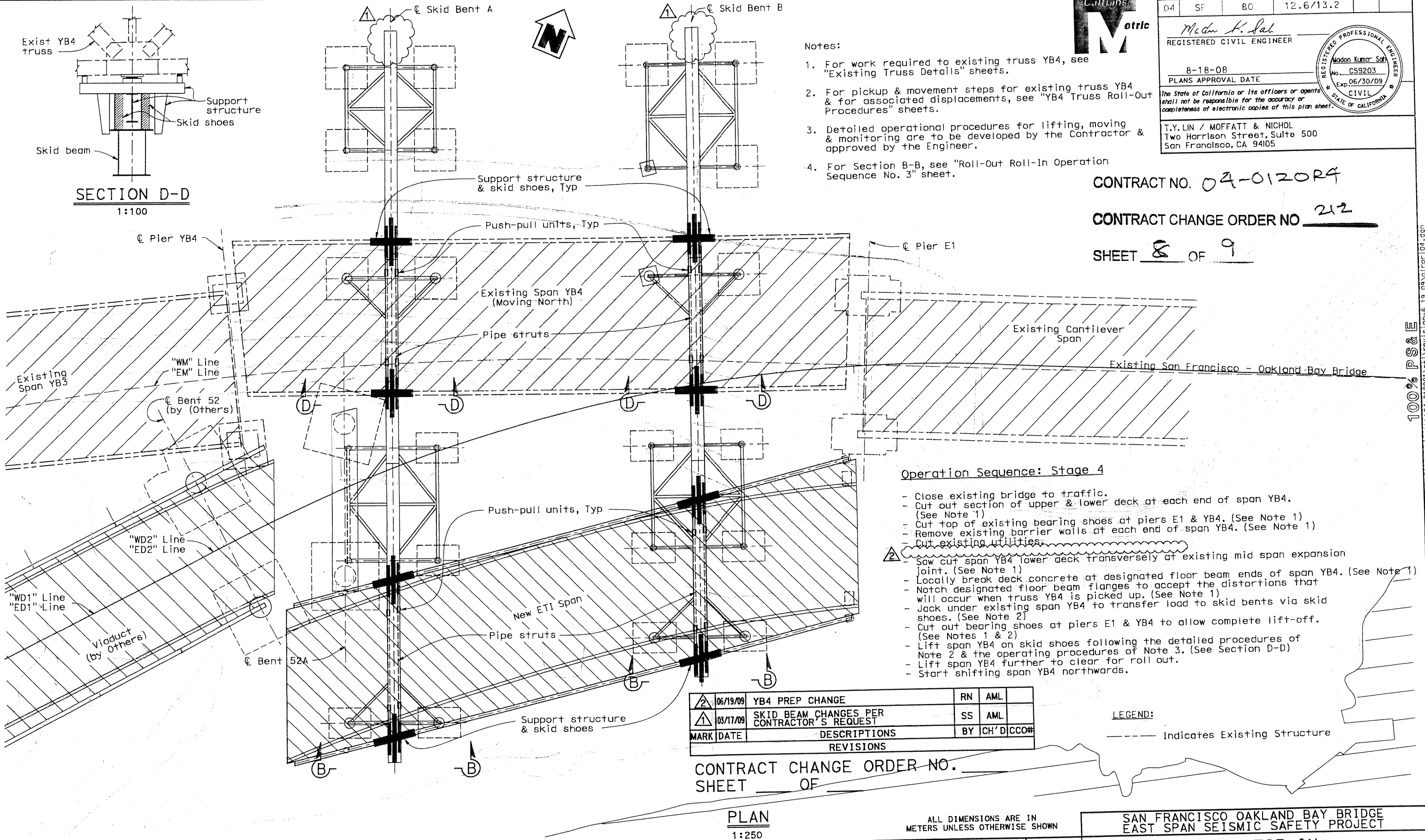

PLAN
1:250

Operation Sequence: Stage 4

- Close existing bridge to traffic.
- Cut out section of upper & lower deck at each end of span YB4. (See Note 1)
- Cut top of existing bearing shoes at piers E1 & YB4. (See Note 1)
- Remove existing barrier walls at each end of span YB4. (See Note 1)
- Cut existing utilities.
- (2) Saw cut span YB4 lower deck transversely at existing mid span expansion joint. (See Note 1)
- Locally break deck concrete at designated floor beam ends of span YB4. (See Note 1)
- Notch designated floor beam flanges to accept the distortions that will occur when truss YB4 is picked up. (See Note 1)
- Jack under existing span YB4 to transfer load to skid bents via skid shoes. (See Note 2)
- Cut out bearing shoes at piers E1 & YB4 to allow complete lift-off. (See Notes 1 & 2)
- Lift span YB4 on skid shoes following the detailed procedures of Note 2 & the operating procedures of Note 3. (See Section D-D)
- Lift span YB4 further to clear for roll out.
- Start shifting span YB4 northwards.

LEGEND:

——— Indicates Existing Structure

MARK	DATE	DESCRIPTIONS	BY	CH'D	CCO#
		REVISIONS			
2	06/19/09	YB4 PREP CHANGE	RN	AML	
1	03/17/09	SKID BEAM CHANGES PER CONTRACTOR'S REQUEST	SS	AML	

CONTRACT CHANGE ORDER NO. ____
SHEET ____ OF ____

ALL DIMENSIONS ARE IN METERS UNLESS OTHERWISE SHOWN

SAN FRANCISCO OAKLAND BAY BRIDGE
EAST SPAN SEISMIC SAFETY PROJECT

EAST TIE-IN

ROLL-OUT ROLL-IN OPERATION SEQUENCE NO. 4

DESIGN	BY J. Otter, M. Chen	CHECKED S. Cheng	
DETAILS	BY P. Zhao, S. Lee	CHECKED A. Lee	
QUANTITIES	BY H. Nelson	CHECKED A. Lee	

T. Ostrom/M. Whiteside/A. Akinsanya
DESIGN OVERSIGHT

SIGN OFF DATE

PREPARED FOR THE STATE OF CALIFORNIA
DEPARTMENT OF TRANSPORTATION

M. Sah
PROJECT ENGINEER
S. Abbas
PROJECT MANAGER

CU 34-0006 (TEMP)
EA 0120R4
KILOMETER POST 12.6

DISREGARD PRINTS BEARING EARLIER REVISION DATES → 11/09/01 | 8/18/08 | 3/17/09 | 6/19/09

SHEET 158R2 OF 214

DESIGN DETAIL SHEET (METRIC) (REV. 3/1/98)
●DATE● ●TIME● Pen Table File

ORIGINAL SCALE IN MILLIMETERS FOR REDUCED PLANS 0 10 20 30 40 50 60 70 80 90 100

FILE => p:\bb\04-012001\etl\revision-6_19_09\alrorl04.dgn

100% PS&E

DATE PLOTTED => 6/19/2009 TIME PLOTTED => 11:40:53 AM

USERNAME => Alee

DIST	COUNTY	ROUTE	KILOMETER POST TOTAL PROJECT	SHEET No	TOTAL
04	SF	80	12.6/13.2		

Caltrans Metric

Madan K. Sah
REGISTERED CIVIL ENGINEER

8-18-08
PLANS APPROVAL DATE

REGISTERED PROFESSIONAL ENGINEER — Madan Kumar Sah — No. C59203 — Exp. 06/30/09 — CIVIL — STATE OF CALIFORNIA

The State of California or its officers or agents shall not be responsible for the accuracy or completeness of electronic copies of this plan sheet.

T.Y.LIN / MOFFATT & NICHOL
Two Harrison Street, Suite 500
San Francisco, CA 94105

Loads & Reactions Are Based On:

TRUSS WEIGHT ESTIMATE
AT ROLL-OUT = 29,000 kN
= 6,600 kips

MARK	DATE	DESCRIPTIONS	BY	CH'D	CCO#
1	6/19/09	YB4 PREP CNANGES	RN	AML	

REVISIONS

CONTRACT CHANGE ORDER NO. __
SHEET ___ OF ___

Phase 1: (Prepare to jack-up)

- Initial position. All preparation work on span YB4 is completed. (See Note C)**
- Restraints at pier YB3 are installed with 50 mm slack, tie back of span YB1 to abutment is installed.

After road is closed:

A. Remove portions of upper & lower decks as noted. (See Note C)**
B. Cut tops of bearing shoes at pier E1 & pier YB4 to allow pins to lift out.
C. Break out concrete at top deck shear brackets. (See Note C)** 1
D. Notch flanges of floor beams. (See Note C)**
E. Saw cut or break out midspan joint in the bottom deck. (See Note C)**

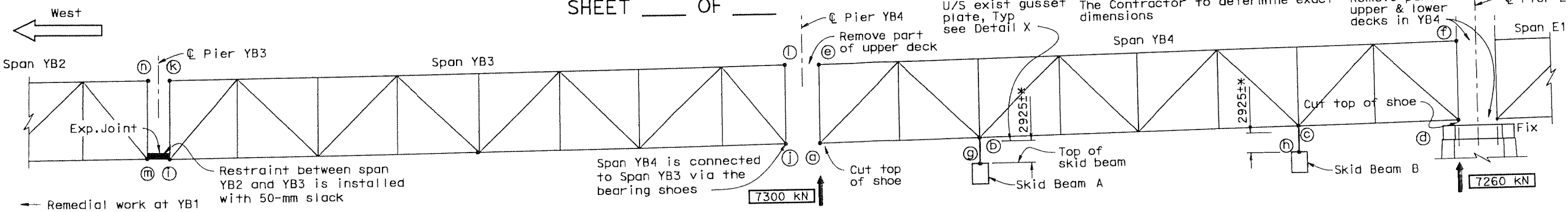

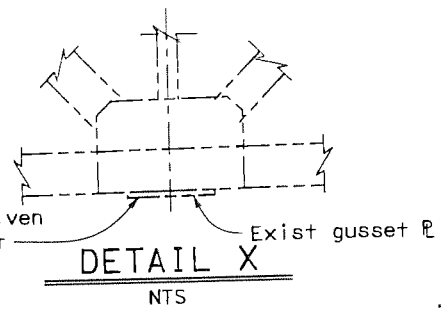

DETAIL X
NTS

* Dimensions are given for convenience only. Dimensions are derived from survey. The Contractor to determine exact dimensions

Phase 2: (Take-up 75% load)

A. Engage East & West skid units (can be done earlier). (See Note B)**
B. Fasten to Truss YB4. (See Note B)**
C. Pick up load on east & west skid units simultaneously until each unit is carrying 5500 KN (approximately 75% of its anticipated maximum load). (See Note 4 & Note B)**

Notes:

1. All displacements are with respect to the initial position of the truss nodes before any jacking operations have taken place.
2. The displacement notation is as following

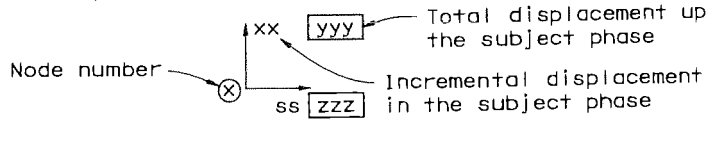

3. Point of east-west restraint is the bearing on Pier E1.
4. Maximum differential between loads at East & West Skid bents not to exceed 1800 KN during lifting.
5. Maximum differential extension of skid shoe jacks on any one skid beam not to exceed 50 mm.
6. Reactions are given per pick-up location and are as calculated. Add 5% contingency to all reactions.
7. Jacks will have to extend further than the displacements shown to accommodate skid beam and skid bent deflections. Allow maximum 50 mm for the total of the two.
8. Displacements given are as calculated. Allow ±33% variation on all displacements.
9. For the purpose of design of skidding system, increase all reactions by a further 8% to allow for the load redistributions that will occur due to skid beam deflections etc. while truss is being carried in four point mode.
10. It is presumed that the existing YB4 truss will be transported in a "four point support" mode, i.e. no hydraulic equalization between any of the four reaction points.

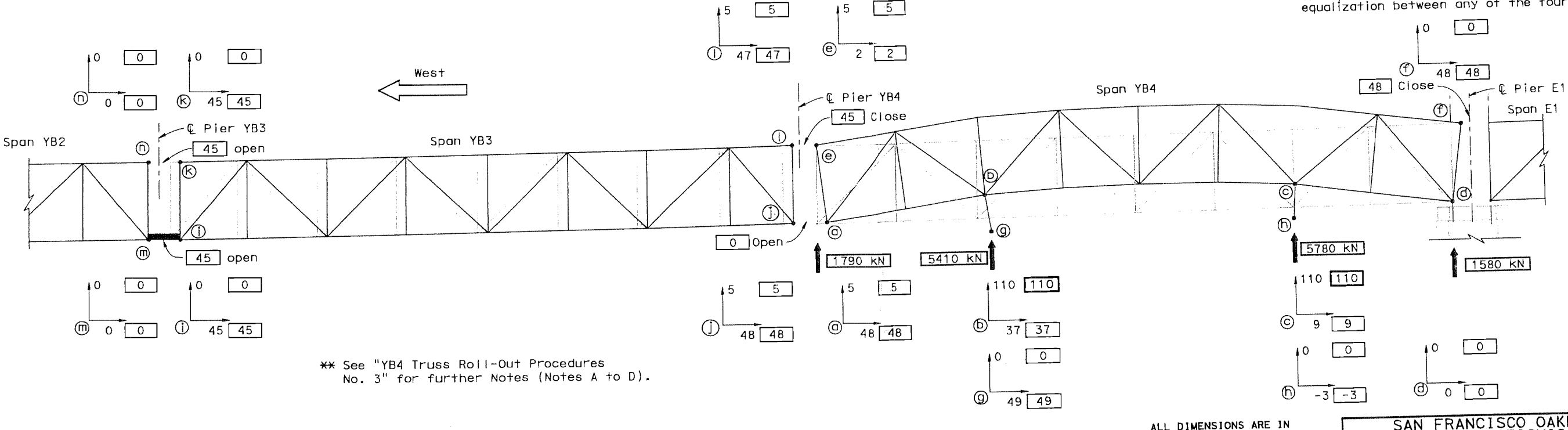

** See "YB4 Truss Roll-Out Procedures No. 3" for further Notes (Notes A to D).

CONTRACT NO. 04-0120R4
CONTRACT CHANGE ORDER NO 212
SHEET 9 OF 9

ALL DIMENSIONS ARE IN METERS UNLESS OTHERWISE SHOWN

SAN FRANCISCO OAKLAND BAY BRIDGE
EAST SPAN SEISMIC SAFETY PROJECT

EAST TIE-IN

YB4 TRUSS ROLL-OUT PROCEDURES NO. 1

T. Ostrom/M. Whiteside/A. Akinsanya, DESIGN OVERSIGHT	DESIGN	BY J. Otter, M. Chen	CHECKED S. Cheng
SIGN OFF DATE	DETAILS	BY P. Zhao, S. Lee	CHECKED A. Lee
	QUANTITIES	BY H. Nelson	CHECKED A. Lee

PREPARED FOR THE STATE OF CALIFORNIA DEPARTMENT OF TRANSPORTATION

M. Sah, PROJECT ENGINEER
S. Abbas, PROJECT MANAGER
CU EA 0120R4

34-0006 (TEMP)
KILOMETER POST 12.6

DISREGARD PRINTS BEARING EARLIER REVISION DATES → 11/09/07 | 8/18/08 | 3/13/09 | 6/19/09

SHEET 163R1 OF 214

DESIGN DETAIL SHEET (METRIC) (REV. 3/1/98) ●DATE● ●TIME● Pen Table File

ORIGINAL SCALE IN MILLIMETERS FOR REDUCED PLANS 0 10 20 30 40 50 60 70 80 90 100

FILE => p:\bb\04-012001\eti\revision-6_19_09\alyb4rop01.dgn

100% PS&E

FILE => p:\bb\04-01
TIME PLOTTED => 11:40:55 AM
DATE PLOTTED => 6/19/2009
USERNAME => Alee

STATE OF CALIFORNIA - DEPARTMENT OF TRANSPORTATION

CONTRACT CHANGE ORDER MEMORANDUM

TO: MIKE FORNER / DEANNA VILCHECK	FILE: E.A. 04 - 0120R4
FROM: BILL CASEY	CO-RTE-PM SF-80-12.6/13.2
	FED. NO. ACBRIM-080-1(097)N
CCO#: **212** SUPPLEMENT#: **0** Category Code: **CHPA**	CONTINGENCY BALANCE (incl. this change) **$67,356,714.59**
COST: **$209,720.00** INCREASE ☑ DECREASE ☐	HEADQUARTERS APPROVAL REQUIRED? ☑ YES ☐ NO
SUPPLEMENTAL FUNDS PROVIDED: **$0.00**	IS THIS REQUEST IN ACCORDANCE WITH ENVIRONMENTAL DOCUMENTS? ☑ YES ☐ NO
CCO DESCRIPTION: YB4 Roll Out Demolition	**PROJECT DESCRIPTION:** CONSTRUCT ROUTE 80 TEMP BYPASS STRUCTURE

Original Contract Time:	Time Adj. This Change:	Previously Approved CCO Time Adjustments:	Percentage Time Adjusted: (including this change)	Total # of Unreconciled Deferred Time CCO(s): (including this change)
475 Day(s)	**DEF** Day(s)	**1195** Day(s)	**252** %	**8**

THIS CHANGE ORDER PROVIDES FOR:

Demolition work of portions of the existing bridge Span YB4, in preparation for the roll out and roll in of Span YB4 over the Labor Day weekend 2009 shutdown, in accordance with Sheets 3 through 9 of the change order.

This project, the Yerba Buena Island Detour (YBID), was awarded in March 2004 to construct a detour that will allow for the tie in of the new east span of the San Francisco Oakland Bay Bridge to Yerba Buena Island. The YBID encompasses three main structures, the East Tie-In to the existing bridge, the West Tie-In (WTI) to Yerba Buena Island, and the Viaduct structure between the two tie ins.

Two separate Department strategy memorandums, dated December 14, 2006 and December 25, 2006, approved by Tony Anziano - Toll Bridge Program Manager and Richard Land - Chief Engineer, recommended that the Department assume responsibility for the designs of the East Tie-In (ETI) and West Tie-In (WTI) portions of this contract, and incorporated seismic retrofit work of the permanent Yerba Buena Island Transition Structure (YBITS) onto this project. Based on these memorandums, the design of the structure was changed from a design that incorporated the existing steel truss bridge with the new structure to a design that replaces the existing structure with a new structure (roll out / roll in). The approval of these strategy memorandums extended the project completion date approximately 5 years.

As a consequence of the change, the East Tie-In Roll Out / Roll In design includes demolition of portions of Span YB-4 (the section that will be rolled out) immediately prior to the roll out operation. Under this change order, the Contractor will perform this demolition work as authorized by the Engineer.

For this work, the Contractor will be compensated at the agreed lump sum of $209,720.00, which will be financed from the contract's contingency funds. A detailed cost analysis for this change is on file in the project records.

Adjustment of contract time is deferred pending completion of the work specified in this change as it may become the controlling operation in accordance with Section 8-1.07 "Liquidated Damages", of the Standard Specifications and Section 10-1.20 "Time Related Overhead (TRO)" of the Special Provisions.

Compensation for delays resulting from this work will be made in accordance with Section 8-1.09 "Right of Way Delays" of the Standard Specifications and Section 10-1.20 "Time Related Overhead" of the Special Provisions.

Mike Whiteside - YBI Coordination Engineer requested this change per Memorandum on June 19, 2009 with concurrences by Alec Melkonians - Asst. Project Manager and Hong Wong - Project Engineer.

Maintenance concurrence for this change order is not required, as this is not part of the permanent structure.

ADA Notice: For individuals with sensory disabilities, this document is available in alternate formats. For information call: (916) 654-6410 or TDD (916) 654-3880 or write Records and Forms Management, 1120 N Street, MS-89, Sacramento, CA 95814.

CONTRACT CHANGE ORDER MEMORANDUM

CONCURRED BY:		
Construction Engineer:	Bill Casey, Resident Engineer	Date 9-1-09
Bridge Engineer:		Date
Project Engineer:	Hong Wong, PE	Date 8/27/09
Project Manager:	Alec Melkonians	Date 8/28/09
FHWA Rep.:		Date
Environmental:		Date
Other (specify):		Date
Other (specify):		Date
District Prior Approval By:		Date
HQ (Issue Approve) By:	Bob Molera, HQ CCO Engineer	Date 9/2/09
Resident Engineer's Signature:		Date 9-1-09

ESTIMATE OF COST

	THIS REQUEST	TOTAL TO DATE
ITEMS	$0.00	$0.00
FORCE ACCOUNT	$0.00	$0.00
AGREED PRICE	$209,720.00	$209,720.00
ADJUSTMENT	$0.00	$0.00
TOTAL	$209,720.00	$209,720.00

FEDERAL PARTICIPATION

☐ PARTICIPATING ☐ PARTICIPATING IN PART ☑ NONE
☐ NON-PARTICIPATING (MAINTENANCE) ☐ NON-PARTICIPATING

FEDERAL SEGREGATION (if more than one Funding Source or P.I.P. type)
☐ CCO FUNDED PER CONTRACT ☐ CCO FUNDED AS FOLLOWS

FEDERAL FUNDING SOURCE	PERCENT

ADA Notice: For individuals with sensory disabilities, this document is available in alternate formats. For information call: (916) 654-6410 or TDD (916) 654-3880 or write Records and Forms Management, 1120 N Street, MS-89, Sacramento, CA 95814.

CONTRACT CHANGE ORDER

Change Requested by: Engineer

CCO 213	Suppl. No. 0	Contract No. 04 - 0120R4	Road SF-80-12.6/13.2	FED. AID LOC.: ACBRIM-080-1(097)N

To: **CC MYERS INC**

You are directed to make the following changes from the plans and specifications or do the following described work not included in the plans and specifications for this contract. ***NOTE: This change order is not effective until approved by the Engineer.***

Description of work to be done, estimate of quantities and prices to be paid. (Segregate between additional work at contract price, agreed price and force account.) Unless otherwise stated, rates for rental of equipment cover only such time as equipment is actually used and no allowance will be made for idle time. This last percentage shown is the net accumulated increase or decrease from the original quantity in the Engineer's Estimate.

Adjustment of Compensation at Lump Sum:

In accordance with Section 4-1.03 "Changes" of the contract Standard Specifications, provide compensation to the Contractor for all additional escalation costs to be incurred in furnishing and installing the Bent 48 expansion joints and barrier plates and in constructing the deck drainage system of the steel Viaduct of the Temporary Bypass Structure (Bridge No. 34-0006 (TEMP)) due to all Department delays to the work.

For this work, the Contractor will be compensated a lump sum of $488,100.00. This sum constitutes full and final compensation for all additional costs to be incurred, including all markups, due to all Department delays to the work.

Total Cost of Adjustment of Compensation at Lump Sum $488,100.00

This change order acts to resolve all outstanding costs associated with Notice of Potential Claim No. 9 and the construction of the approved Viaduct deck drainage system.

Estimated Cost: Increase ☑ Decrease ☐ **$488,100.00**

By reason of this order the time of completion will be adjusted as follows: 0 days

Submitted by

Signature	Resident Engineer	Date
	BILL CASEY	7-18-09

Approval Recommended by

Signature	Area Construction Manager	Date
Deanna Vilcheck	DEANNA VILCHECK	7/21/09

Engineer Approval by

Signature	Area Construction Manager	Date
Deanna Vilcheck	DEANNA VILCHECK	8/6/09

We the undersigned contractor, have given careful consideration to the change proposed and agree, if this proposal is approved, that we will provide all equipment, furnish the materials, except as may otherwise be noted above, and perform all services necessary for the work above specified, and will accept as full payment therefor the prices shown above.

NOTE: **If you, the contractor, do not sign acceptance of this order, your attention is directed to the requirements of the specifications as to proceeding with the ordered work and filing a written protest within the time therein specified.**

Contractor Acceptance by

Signature	(Print name and title)	Date
	DANIEL E. HUMICK, PRESIDENT	8/04/09

STATE OF CALIFORNIA - DEPARTMENT OF TRANSPORTATION

CONTRACT CHANGE ORDER MEMORANDUM

DATE: 7/9/2009

TO: MIKE FORNER / DEANNA VILCHECK	FILE: E.A. 04 - 0120R4
FROM: BILL CASEY	CO-RTE-PM SF-80-12.6/13.2
	FED. NO. ACBRIM-080-1(097)N
CCO#: 213 SUPPLEMENT#: 0 Category Code: EXBB	CONTINGENCY BALANCE (incl. this change) $32,617,001.59
COST: $488,100.00 INCREASE ☑ DECREASE ☐	HEADQUARTERS APPROVAL REQUIRED? ☑ YES ☐ NO
SUPPLEMENTAL FUNDS PROVIDED: $0.00	IS THIS REQUEST IN ACCORDANCE WITH ENVIRONMENTAL DOCUMENTS? ☑ YES ☐ NO
CCO DESCRIPTION: VIAExpansion Joint & Drainage Escalation	PROJECT DESCRIPTION: CONSTRUCT ROUTE 80 TEMP BYPASS STRUCTURE

Original Contract Time:	Time Adj. This Change:	Previously Approved CCO Time Adjustments:	Percentage Time Adjusted: (including this change)	Total # of Unreconciled Deferred Time CCO(s): (including this change)
475 Day(s)	0 Day(s)	1195 Day(s)	252 %	7

THIS CHANGE ORDER PROVIDES FOR:

Compensation to the contractor for escalation costs associated with the expansion joint and deck drainage system of the Viaduct.

This project, the Yerba Buena Island Detour (YBID), calls for the construction of a temporary detour for both eastbound and westbound I-80 traffic that will allow for the tie in of the new east span of the San Francisco Oakland Bay Bridge to Yerba Buena Island. The YBID encompasses three main structures, the East Tie-In to the existing bridge, the West Tie-In (WTI) to Yerba Buena Island, and the Viaduct structure between the two tie ins. The contract was awarded as a performance-based project with the contractor responsible for meeting the design criteria specified in the contract.

The Viaduct consists of 4 spans of a double deck steel truss approximately 20 meters wide and 320 meters long with a weight of over 4,300 metric tons. Due to extensive Department-ordered changes and delays to the project, the contract completion date has been extended by approximately 4 and a half years. Due to these delays, the Contractor has incurred considerable escalation costs associated with furnishing and installing the expansion joints at Bent 48 and in constructing the deck drainage system for the structure. This change order provides compensation for these additional costs.

The expansion joints at Bent 48 consist of 2 separate steel expansion joints, one for each the upper and lower deck, each approximately 24 meters long and 1 meter wide. These joints also require the installation of 4 steel barrier plates. Due to Department delays, the fabrication of these items realized unusual price increases due to the extraordinary global steel price escalation during the 2004 through 2006 period. Additional cost were incurred in both the fabrication and installation of the joints and plates due to more typical labor and equipment escalation realized. The deck drainage concerning the construction of scuppers in the bridge barrier rail has also incurred these more typical labor and equipment escalation costs.

Compensation provided under this change order is based on an as-planned verses actual costs analysis for the affected expansion joints, barrier plates and deck drainage.

Compensation shall be paid as an adjustment of compensation at an agreed lump sum of $488,100.00 which shall be financed from the contract's contingency funds. A cost estimate is on file.

This change order acts to resolve all outstanding costs associated with Notice of Potential Claim No. 9 and the construction of the approved Viaduct deck drainage system.

No adjustment of contract time is warranted as this change will not affect the controlling operation.

This change was concurred with by Alec Melkonians - Asst. Project Manager and Hong Wong - Project Engineer.

Maintenance concurrence is not required as this is an administrative change and doesn't affect any permanent roadway features.

ADA Notice: For individuals with sensory disabilities, this document is available in alternate formats. For information call: (916) 654-6410 or TDD (916) 654-3880 or write Records and Forms Management, 1120 N Street, MS-89, Sacramento, CA 95814.

CONCURRED BY:		
Construction Engineer:	Bill Casey, Resident Engineer	Date 7-18-09
Bridge Engineer:		Date
Project Engineer:	Hong Wong, PE	Date 7/13/09
Project Manager:	Alec Melkonians	Date 7/9/09
FHWA Rep.:		Date
Environmental:		Date
Other (specify):		Date
Other (specify):		Date
District Prior Approval By:		Date
HQ (Issue Approve) By:	Bob Molera, HQ CCO Engineer	Date 7-23-09
Resident Engineer's Signature:		Date 7-18-09

ESTIMATE OF COST

	THIS REQUEST	TOTAL TO DATE
ITEMS	$0.00	$0.00
FORCE ACCOUNT	$0.00	$0.00
AGREED PRICE	$0.00	$0.00
ADJUSTMENT	$488,100.00	$488,100.00
TOTAL	$488,100.00	$488,100.00

FEDERAL PARTICIPATION

☐ PARTICIPATING ☐ PARTICIPATING IN PART ☑ NONE
☐ NON-PARTICIPATING (MAINTENANCE) ☐ NON-PARTICIPATING

FEDERAL SEGREGATION (if more than one Funding Source or P.I.P. type)
☐ CCO FUNDED PER CONTRACT ☐ CCO FUNDED AS FOLLOWS

FEDERAL FUNDING SOURCE	PERCENT

ADA Notice: For individuals with sensory disabilities, this document is available in alternate formats. For information call: (916) 654-6410 or TDD (916) 654-3880 or write Records and Forms Management, 1120 N Street, MS-89, Sacramento, CA 95814.

CONTRACT CHANGE ORDER

Change Requested by: Engineer

CCO 214	Suppl. No. 0	Contract No. 04 - 0120R4	Road SF-80-12.6/13.2	FED. AID LOC.:

To: **CC MYERS INC**

You are directed to make the following changes from the plans and specifications or do the following described work not included in the plans and specifications for this contract. ***NOTE: This change order is not effective until approved by the Engineer.***

Description of work to be done, estimate of quantities and prices to be paid. (Segregate between additional work at contract price, agreed price and force account.) Unless otherwise stated, rates for rental of equipment cover only such time as equipment is actually used and no allowance will be made for idle time. This last percentage shown is the net accumulated increase or decrease from the original quantity in the Engineer's Estimate.

Extra Work at Lump Sum:

Provide compensation to the Contractor for additional costs associated with the erection of the steel truss of the East Tie-In (ETI) portion of the Temporary Bypass Structure (Bridge No. 34-0006 (TEMP)).

For this work, the Contractor shall be compensated an agreed lump sum of $645,210.00. Except for the 6 items of work specifically excluded herein, this lump sum constitutes full and final compensation, including all markups, for all outstanding costs incurred by the Contractor's steel erection subcontractor Danny's Construction Company, Inc. (DCCI) pertaining to the erection of the steel truss of the East Tie-In.

Compensation for the following 6 items of work pertaining to the steel erection of the steel truss of the East Tie-In is excluded from the resolution of costs associated with this change order:

1) Costs associated with the double handling of steel which had to be stored off site as defined under Change Order No. 225.
2) Costs associated with the mockup of the ETI expansion joints as defined under Change Order No. 144.
3) Costs associated with the falsework erection at tower L8 North incurred due to unanticipated pile depth at the falsework foundation.
4) Costs associated with the installation of the ETI metal decking incurred due to the elimination of the asphalt wearing surface.
5) Costs associated with the erection and installation of the ETI temporary bracing as defined under Change Order No. 187
6) Costs associated with the roll out of Span YB4, the roll in of the ETI truss and the installation of the ETI truss bearings, expansion joints and expansion joint barrier as defined under Change Order No. 204.

Excluding these 6 items of work, no additional compensation shall be paid pertaining to costs incurred by DCCI in the erection of the steel truss of the ETI.

Total Cost of Extra Work at Lump Sum $645,210.00

Outstanding costs associated with steel erection work pertaining to the ETI skid bent or the existing steel truss (Spans YB1 through YB4 and Pier E1) are not addressed under this change order.

CONTRACT CHANGE ORDER

Change Requested by: Engineer

CCO 214	Suppl. No. 0	Contract No. 04 - 0120R4	Road SF-80-12.6/13.2	FED. AID LOC.:

Estimated Cost: Increase ☑ Decrease ☐ $645,210.00

By reason of this order the time of completion will be adjusted as follows: 0 days

Submitted by

Signature	Resident Engineer	Date
	BILL CASEY	10-3-09

Approval Recommended by

Signature	Area Construction Manager	Date
Deanna Vilcheck	DEANNA VILCHECK	10/7/09

Engineer Approval by

Signature	Area Construction Manager	Date
Deanna Vilcheck	DEANNA VILCHECK	1/19/10

We the undersigned contractor, have given careful consideration to the change proposed and agree, if this proposal is approved, that we will provide all equipment, furnish the materials, except as may otherwise be noted above, and perform all services necessary for the work above specified, and will accept as full payment therefor the prices shown above.

NOTE: If you, the contractor, do not sign acceptance of this order, your attention is directed to the requirements of the specifications as to proceeding with the ordered work and filing a written protest within the time therein specified.

Contractor Acceptance by

Signature	(Print name and title)	Date
	DANIEL E. HIMICK, PRESIDENT	1/11/10

STATE OF CALIFORNIA - DEPARTMENT OF TRANSPORTATION

CONTRACT CHANGE ORDER

Change Requested by: Engineer

CCO 215	Suppl. No. 0	Contract No. 04 - 0120R4	Road SF-80-12.6/13.2	FED. AID LOC.: ACBRIM-080-1(097)N

To: CC MYERS INC

You are directed to make the following changes from the plans and specifications or do the following described work not included in the plans and specifications for this contract. ***NOTE: This change order is not effective until approved by the Engineer.***

Description of work to be done, estimate of quantities and prices to be paid. (Segregate between additional work at contract price, agreed price and force account.) Unless otherwise stated, rates for rental of equipment cover only such time as equipment is actually used and no allowance will be made for idle time. This last percentage shown is the net accumulated increase or decrease from the original quantity in the Engineer's Estimate.

Estimate of Decrease in Contract Item at Contract Price:

Item No. 79: 300 MM WATER MAIN
-73 M (–100.00%) $450.00 /M = –$32,850.00 (–200.00%)

Item No. 80: 100 MM WATER LINE
-74 M (–100.00%) $350.00 /M = –$25,900.00 (–200.00%)

Total Cost for Decrease in Contract Item.....($58,750.00)

In accordance with Section 4-1.03B(3), "Eliminated Items," of the Standard Specifications, the adjustment due to the elimination of Item #79, 300mm Water Main, and Item #80, 100mm Waterline, is zero.

Extra Work at Force Account:

As authorized by the Engineer, and in accordance with Section 10-1.65 Water Mains of the Contract Special Provisions, furnish and install a 100 mm and 300 mm waterline on Yerba Buena Island.

Estimated cost of Extra Work at Force Account $100,000.00

RECEIVED
011098 OCT -8 09

Estimated Cost: Increase ☑ Decrease ☐ **$41,250.00**

By reason of this order the time of completion will be adjusted as follows: 0 days

Submitted by		
Signature	Resident Engineer BILL CASEY	Date 9-18-09
Approval Recommended by		
Signature Deanna Vilcheck	Area Construction Manager DEANNA VILCHECK	Date 9/18/09
Engineer Approval by		
Signature Deanna Vilcheck	Area Construction Manager DEANNA VILCHECK	Date 10/7/09

We the undersigned contractor, have given careful consideration to the change proposed and agree, if this proposal is approved, that we will provide all equipment, furnish the materials, except as may otherwise be noted above, and perform all services necessary for the work above specified, and will accept as full payment therefor the prices shown above.

NOTE: If you, the contractor, do not sign acceptance of this order, your attention is directed to the requirements of the specifications as to proceeding with the ordered work and filing a written protest within the time therein specified.

Contractor Acceptance by		
Signature	(Print name and title) STEVE FRANCIS, CHIEF ESTIMATOR	Date 10·2·09

STATE OF CALIFORNIA - DEPARTMENT OF TRANSPORTATION

CONTRACT CHANGE ORDER MEMORANDUM

TO: MIKE FORNER / DEANNA VILCHECK	FILE: E.A. 04 - 0120R4
FROM: BILL CASEY	CO-RTE-PM SF-80-12.6/13.2
	FED. NO.
CCO#: 215 SUPPLEMENT#: 0 Category Code: CLXX	CONTINGENCY BALANCE (incl. this change) $17,627,417.59
COST: $41,250.00 INCREASE ☑ DECREASE ☐	HEADQUARTERS APPROVAL REQUIRED? ☐ YES ☑ NO
SUPPLEMENTAL FUNDS PROVIDED: $0.00	IS THIS REQUEST IN ACCORDANCE WITH ENVIRONMENTAL DOCUMENTS? ☑ YES ☐ NO
CCO DESCRIPTION: Waterline Ground Work	**PROJECT DESCRIPTION:** CONSTRUCT ROUTE 80 TEMP BYPASS STRUCTURE

Original Contract Time:	Time Adj. This Change:	Previously Approved CCO Time Adjustments:	Percentage Time Adjusted: (including this change)	Total # of Unreconciled Deferred Time CCO(s): (including this change)
475 Day(s)	0 Day(s)	1195 Day(s)	252 %	7

THIS CHANGE ORDER PROVIDES FOR:

Furnishing and installing a 100 mm and 300 mm ground waterline on Yerba Buena Island.

This project, the Yerba Buena Island Detour (YBID), was awarded in March 2004 to construct a detour that will allow for the tie in of the new east span of the San Francisco Oakland Bay Bridge to Yerba Buena Island. The YBID encompasses three main structures, the East Tie-In to the existing bridge, the West Tie-In (WTI) to Yerba Buena Island, and the Viaduct structure between the two tie ins.

Two separate Department strategy memorandums, dated December 14, 2006 and December 25, 2006, approved by Tony Anziano - Toll Bridge Program Manager and Richard Land - Chief Engineer, recommended that the Department assume responsibility for the designs of the East Tie-In (ETI) and West Tie-In (WTI) portions of this contract, and incorporated seismic retrofit work of the permanent Yerba Buena Island Transition Structure (YBITS) onto this project. The approval of these strategy memorandums extended the project completion date approximately 5 years.

Based on the approved strategy memorandums, the Department assumed responsibility for the ground waterline work and provided direction to the Contractor on what work was needed to accommodate the design changes on the Yerba Buena Island Detour. Due to the change in original scope of work on the waterline and the 5-year delay that has been incurred on the project, the original Contract Bid Item No. 79 - 300mm Water Main and Item No. 80 - 100mm Water Line, shall be eliminated as this work is no longer representative of the work as originally bid. Consequently, the work of this change order shall be compensated for under Extra Work at Force Account.

Contract Bid Item Nos. 79 and 80, for a total amount of $58,750.00 will be deleted from the contract. The Contractor will be compensated for the Department's revised waterline work at Extra Work at Force Account for $100,000.00. The net change order cost of $41,250.00 shall be financed from the projects contingency funds. A cost analysis is on file in the project records.

No adjustment of contract time is warranted as this change will not affect the controlling operation.

This change was concurred with by Alec Melkonians - Asst. Project Manager and Hong Wong - Project Engineer.

Maintenance concurrence is not required as this is an administrative change and doesn't affect any permanent roadway features.

ADA Notice: For individuals with sensory disabilities, this document is available in alternate formats. For information call: (916) 654-6410 or TDD (916) 654-3880 or write Records and Forms Management, 1120 N Street, MS-89, Sacramento, CA 95814.

CONTRACT CHANGE ORDER MEMORANDUM

CONCURRED BY:			
Construction Engineer:	Jeannie Balderramos JB	Date	9-18-09
Bridge Engineer:		Date	
Project Engineer:	Hong Wong, PE	Date	8/13/09
Project Manager:	Alec Melkonians	Date	8/13/09
FHWA Rep.:		Date	
Environmental:		Date	
Other (specify):		Date	
Other (specify):		Date	
District Prior Approval By:		Date	
HQ (Issue Approve) By:		Date	
Resident Engineer's Signature:		Date	
			9-18-09

ESTIMATE OF COST

	THIS REQUEST	TOTAL TO DATE
ITEMS	($58,750.00)	($58,750.00)
FORCE ACCOUNT	$100,000.00	$100,000.00
AGREED PRICE	$0.00	$0.00
ADJUSTMENT	$0.00	$0.00
TOTAL	$41,250.00	$41,250.00

FEDERAL PARTICIPATION

☐ PARTICIPATING ☐ PARTICIPATING IN PART ☑ NONE
☐ NON-PARTICIPATING (MAINTENANCE) ☐ NON-PARTICIPATING

FEDERAL SEGREGATION (if more than one Funding Source or P.I.P. type)
☐ CCO FUNDED PER CONTRACT ☐ CCO FUNDED AS FOLLOWS

FEDERAL FUNDING SOURCE	PERCENT

ADA Notice: For individuals with sensory disabilities, this document is available in alternate formats. For information call: (916) 654-6410 or TDD (916) 654-3880 or write Records and Forms Management, 1120 N Street, MS-89, Sacramento, CA 95814.

STATE OF CALIFORNIA - DEPARTMENT OF TRANSPORTATION

CONTRACT CHANGE ORDER

Change Requested by: Engineer

CCO: 215	Suppl. No. 1	Contract No. 04 - 0120R4	Road SF-80-12.6/13.2	FED. AID LOC.:

To: **CC MYERS INC**

You are directed to make the following changes from the plans and specifications or do the following described work not included in the plans and specifications for this contract. ***NOTE: This change order is not effective until approved by the Engineer.***

Description of work to be done, estimate of quantities and prices to be paid. (Segregate between additional work at contract price, agreed price and force account.) Unless otherwise stated, rates for rental of equipment cover only such time as equipment is actually used and no allowance will be made for idle time. This last percentage shown is the net accumulated increase or decrease from the original quantity in the Engineer's Estimate.

Extra Work at Force Account:

Provide additional funds for the work specified under the original Change Order No. 215.

Estimated cost of Extra Work at Force Account $110,000.00

Estimated Cost: Increase ☑ Decrease ☐ **$110,000.00**

By reason of this order the time of completion will be adjusted as follows: 0 days

Submitted by

Signature Jeannie Balderramos	Resident Engineer JEANNIE BALDERRAMOS	Date 7/2/10

Approval Recommended by

Signature Deanna Vilcheck	Area Construction Manager DEANNA VILCHECK	Date 7/2/10

Engineer Approval by

Signature Deanna Vilcheck	Area Construction Manager DEANNA VILCHECK	Date 7/7/10

We the undersigned contractor, have given careful consideration to the change proposed and agree, if this proposal is approved, that we will provide all equipment, furnish the materials, except as may otherwise be noted above, and perform all services necessary for the work above specified, and will accept as full payment therefor the prices shown above.

NOTE: If you, the contractor, do not sign acceptance of this order, your attention is directed to the requirements of the specifications as to proceeding with the ordered work and filing a written protest within the time therein specified.

Contractor Acceptance by

Signature N/A	(Print name and title)	Date

CONTRACT CHANGE ORDER

Change Requested by: Engineer

CCO 216	Suppl. No. 0	Contract No. 04 - 0120R4	Road SF-80-12.6/13.2	FED. AID LOC.: ACBRIM-080-1(097)N

To: **CC MYERS INC**

You are directed to make the following changes from the plans and specifications or do the following described work not included in the plans and specifications for this contract. ***NOTE: This change order is not effective until approved by the Engineer.***

Description of work to be done, estimate of quantities and prices to be paid. (Segregate between additional work at contract price, agreed price and force account.) Unless otherwise stated, rates for rental of equipment cover only such time as equipment is actually used and no allowance will be made for idle time. This last percentage shown is the net accumulated increase or decrease from the original quantity in the Engineer's Estimate.

Extra Work at Force Account:

As authorized by the Engineer, provide and construct steel supports for the East Tie In south truss lower deck barrier rail connection as shown on Sheets No. 2 through 3 of this change order.

Estimated Cost of Extra Work at Force Account $175,000.00

RECEIVED
OCT 08 2009

Estimated Cost: Increase ☑ Decrease ☐ **$175,000.00**

By reason of this order the time of completion will be adjusted as follows: 0 days

Submitted by

Signature	Resident Engineer	Date
	BILL CASEY	9-15-09

Approval Recommended by

Signature	Area Construction Manager	Date
Deanna Vilcheck	DEANNA VILCHECK	9/15/09

Engineer Approval by

Signature	Area Construction Manager	Date
Deanna Vilcheck	DEANNA VILCHECK	10/7/09

We the undersigned contractor, have given careful consideration to the change proposed and agree, if this proposal is approved, that we will provide all equipment, furnish the materials, except as may otherwise be noted above, and perform all services necessary for the work above specified, and will accept as full payment therefor the prices shown above.

NOTE: If you, the contractor, do not sign acceptance of this order, your attention is directed to the requirements of the specifications as to proceeding with the ordered work and filing a written protest within the time therein specified.

Contractor Acceptance by

Signature	(Print name and title)	Date
	DANIEL E. HUMICK, PRESIDENT	10/02/09

CONTRACT NO. 04-0120R4

CONTRACT CHANGE ORDER NO 216

SHEET 2 OF 3

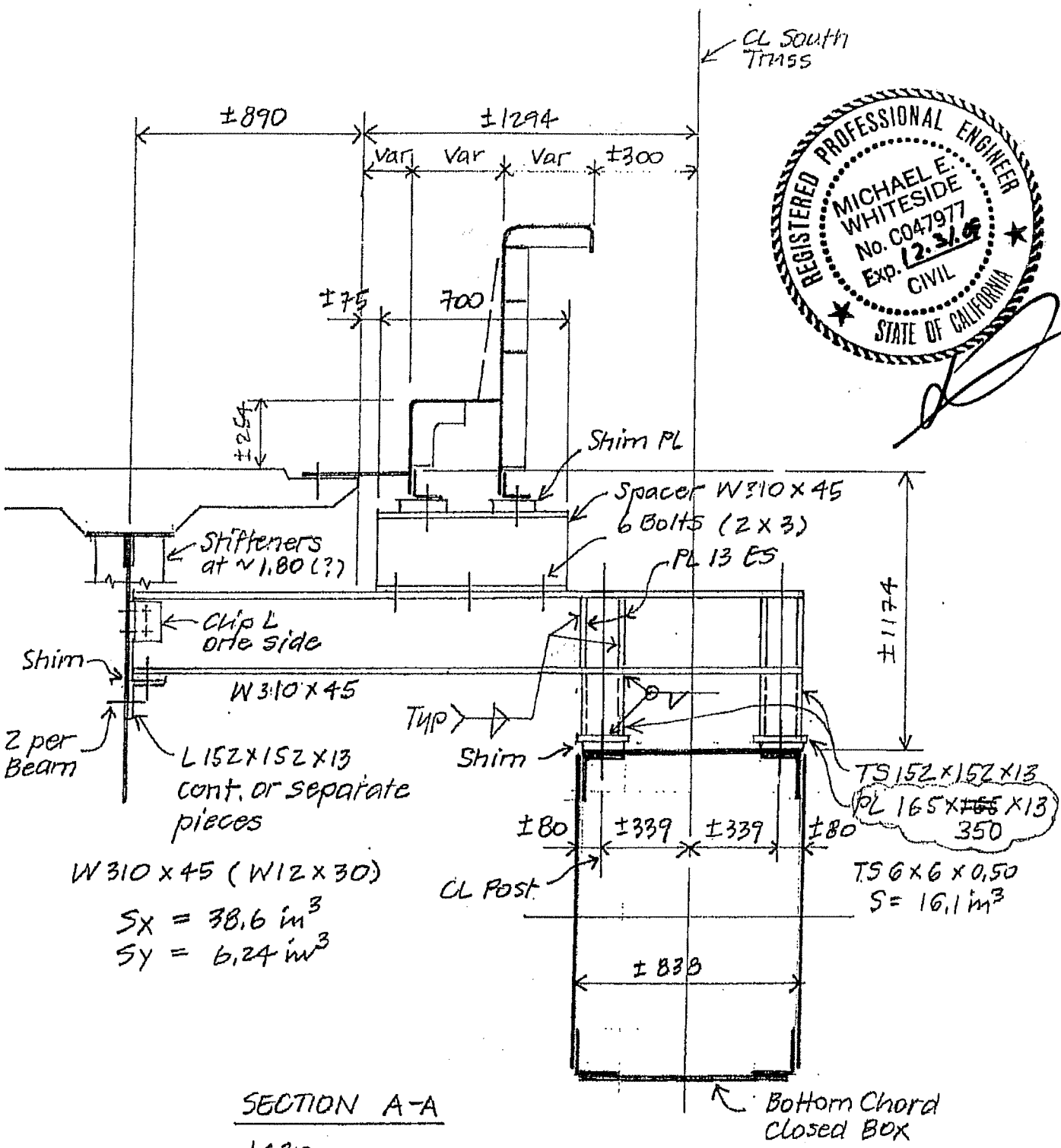

REGISTERED PROFESSIONAL ENGINEER
MICHAEL E. WHITESIDE
No. C047977
Exp. 12-31-09
CIVIL
STATE OF CALIFORNIA

SECTION A-A

1:20

All bolts in field ϕ19 unless noted otherwise, A325

Steel A36 or A50

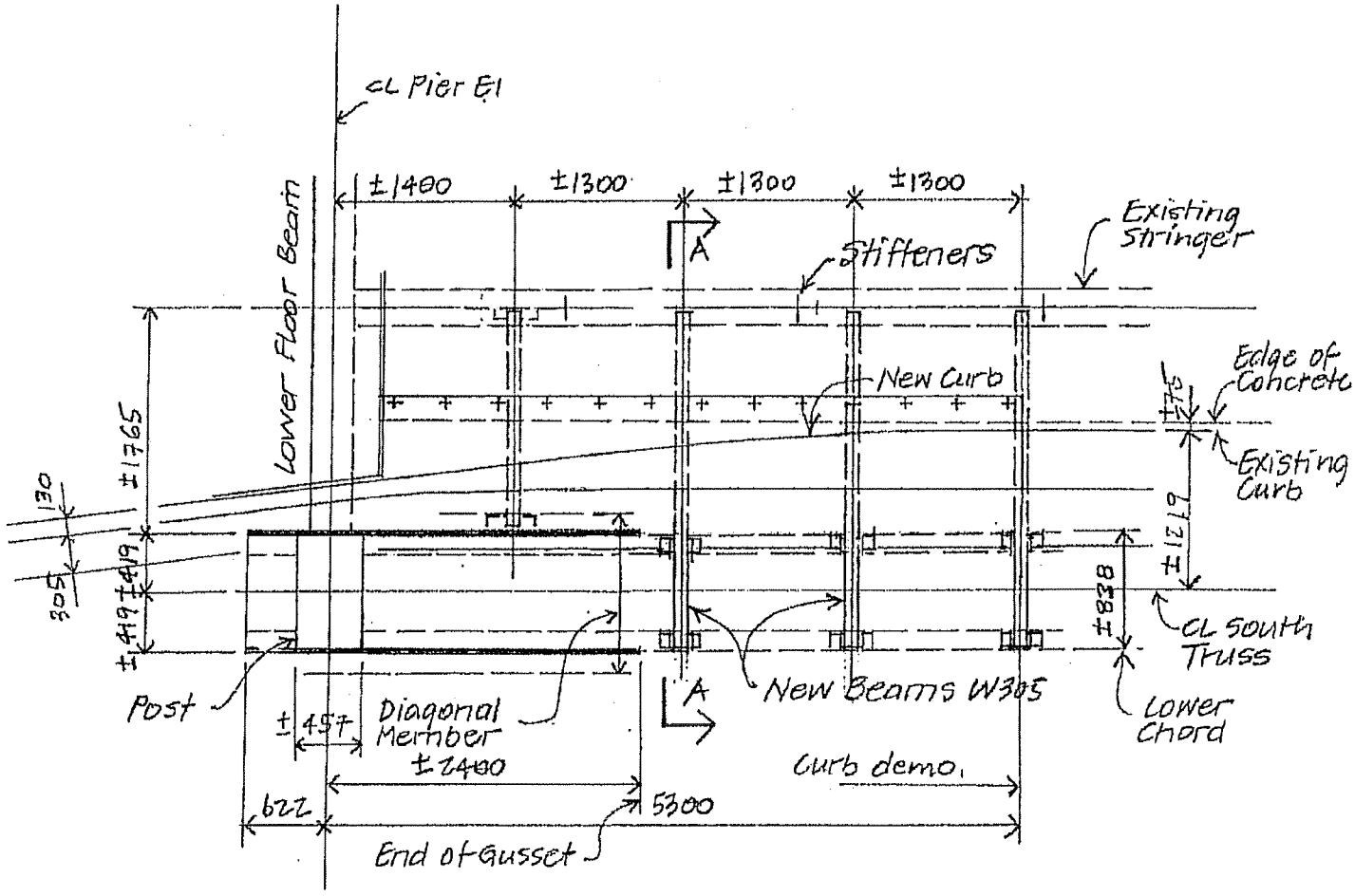

PLAN AT PIER E1
LOWER DECK/SOUTH TRUSS

1 : 50

REGISTERED PROFESSIONAL ENGINEER
MICHAEL E. WHITESIDE
No. C047977
Exp. 12-31-06
CIVIL
STATE OF CALIFORNIA

CONTRACT NO. 04-0120R4

CONTRACT CHANGE ORDER NO 216

SHEET 3 OF 3

STATE OF CALIFORNIA - DEPARTMENT OF TRANSPORTATION

CONTRACT CHANGE ORDER MEMORANDUM

TO: MIKE FORNER / DEANNA VILCHECK

FROM: BILL CASEY

FILE: **E.A.** 04 - 0120R4
CO-RTE-PM SF-80-12.6/13.2
FED. NO. ACBRIM-080-1(097)**N**

CCO#: **216** | SUPPLEMENT#: **0** | Category Code: **CHPA**

CONTINGENCY BALANCE (incl. this change) **$55,775,400.59**

COST: **$175,000.00** INCREASE ☑ DECREASE ☐

HEADQUARTERS APPROVAL REQUIRED? ☐ YES ☑ NO

SUPPLEMENTAL FUNDS PROVIDED: **$0.00**

IS THIS REQUEST IN ACCORDANCE WITH ENVIRONMENTAL DOCUMENTS? ☑ YES ☐ NO

CCO DESCRIPTION:
ETI Pier E1 Barrier Rail Supports

PROJECT DESCRIPTION:
CONSTRUCT ROUTE 80 TEMP BYPASS STRUCTURE

Original Contract Time:	Time Adj. This Change:	Previously Approved CCO Time Adjustments:	Percentage Time Adjusted: (including this change)	Total # of Unreconciled Deferred Time CCO(s): (including this change)
475 Day(s)	**0** Day(s)	**1195** Day(s)	**252** %	**8**

THIS CHANGE ORDER PROVIDES FOR:

Adding steel support members for the East Tie In, south truss, lower deck barrier rail connection to the existing structure.

This project, the Yerba Buena Island Detour (YBID), calls for the construction of a temporary detour for both eastbound and westbound I-80 traffic that will allow for the tie in of the new east span of the San Francisco Oakland Bay Bridge to Yerba Buena Island. The YBID encompasses three main structures, the East Tie-In to the existing bridge, the West Tie-In (WTI) to Yerba Buena Island, and the Viaduct structure between the two tie ins. The contract was awarded as a performance-based project with the contractor responsible for meeting the design criteria specified in the contract.

A December 14, 2006 Department strategy memorandum, approved by Tony Anziano, Toll Bridge Program Manager, and Richard Land, Chief Engineer, recommended that the Department assume the design responsibility for the East Tie-In (ETI) structure. Based on this memorandum, the design of the structure was changed from a design that incorporated the existing steel truss bridge with the new structure to a design that replaces the existing structure with a new structure (roll out / roll in).

Project Development along with Toll Bridge Design has previously issued plan sheets providing for the replacement of steel barrier rail along the existing structure at the location where existing structure meets the new East Tie-In roll in structure. These new design drawings add steel members as required to support the new barrier rail location. This change order incorporates these plan sheets into the contract.

Due to the expedited requirements of this change order to procure, fabricate, and install the steel, compensation for this work shall be paid as extra work at force account for an estimated cost of $175,000.00, which shall be financed from the contract's contingency funds. A cost estimate is on file. This work shall take place either prior to or during the 2009 Labor Day Weekend closure of the San Francisco-Oakland Bay Bridge.

No adjustment of contract time is warranted as this change will not affect the controlling operation.

Mike Whiteside - YBI Coordination Engineer requested this change per Memorandum on August 17, 2009 with concurrences by Alec Melkonians - Asst. Project Manager, Hong Wong - Project Engineer, and Lina Ellis - Maintenance.

ADA Notice: For individuals with sensory disabilities, this document is available in alternate formats. For information call: (916) 654-6410 or TDD (916) 654-3880 or write Records and Forms Management, 1120 N Street, MS-89, Sacramento, CA 95814.

CONTRACT CHANGE ORDER MEMORANDUM

CONCURRED BY:			
Construction Engineer:	Bill Casey, Resident Engineer	Date	9-15-09
Bridge Engineer:		Date	
Project Engineer:	Hong Wong, PE	Date	9/14/09
Project Manager:	Alec Melkonians	Date	9/15/09
FHWA Rep.:		Date	
Environmental:		Date	
Other (specify):	Lina Ellis, Maintenance	Date	9/2/09
Other (specify):		Date	
District Prior Approval By:		Date	
HQ (Issue Approve) By:		Date	
Resident Engineer's Signature:		Date	9-15-09

ESTIMATE OF COST

	THIS REQUEST	TOTAL TO DATE
ITEMS	$0.00	$0.00
FORCE ACCOUNT	$175,000.00	$175,000.00
AGREED PRICE	$0.00	$0.00
ADJUSTMENT	$0.00	$0.00
TOTAL	$175,000.00	$175,000.00

FEDERAL PARTICIPATION

☐ PARTICIPATING ☐ PARTICIPATING IN PART ☑ NONE
☐ NON-PARTICIPATING (MAINTENANCE) ☐ NON-PARTICIPATING

FEDERAL SEGREGATION (if more than one Funding Source or P.I.P. type)
☐ CCO FUNDED PER CONTRACT ☐ CCO FUNDED AS FOLLOWS

FEDERAL FUNDING SOURCE	PERCENT

ADA Notice: For individuals with sensory disabilities, this document is available in alternate formats. For information call: (916) 654-6410 or TDD (916) 654-3880 or write Records and Forms Management, 1120 N Street, MS-89, Sacramento, CA 95814.

CONTRACT CHANGE ORDER

Change Requested by: Engineer

CCO 217	Suppl. No. 0	Contract No. 04 - 0120R4	Road SF-80-12.6/13.2	FED. AID LOC.:

To: CC MYERS INC

You are directed to make the following changes from the plans and specifications or do the following described work not included in the plans and specifications for this contract. ***NOTE: This change order is not effective until approved by the Engineer.***

Description of work to be done, estimate of quantities and prices to be paid. (Segregate between additional work at contract price, agreed price and force account.) Unless otherwise stated, rates for rental of equipment cover only such time as equipment is actually used and no allowance will be made for idle time. This last percentage shown is the net accumulated increase or decrease from the original quantity in the Engineer's Estimate.

Extra Work at Lump Sum:

Perform all work as specified within this change order pertaining to the demolition and removal of the skid bent and beam of the East Tie-In portion of the Temporary Bypass Structure (Bridge No. 34-0006 (TEMP)).

Compensation paid under this change order includes all costs associated with the following 6 items of work:

1) Performing all bridge removal work associated with the demolition and disposal of the skid bent system, including all skid bents, beams, walkways and appurtenances, of the East Tie-In. This work includes the demolition and disposal of Skid Beam Segment A1 and Segment B1 after being lowered with the Span YB4 truss and the demolition and disposal of Bent 1 and Bent 2 towers of both Skid Bent A and Skid Bent B after they are transported to allow for the lowering of the Span YB4 truss.

2) Performing all bridge removal work associated with the demolition and disposal of the 8 structural steel supports installed between the bottom chord and the skid beam for both the YB4 and ETI trusses that were installed under Change Order No. 171.

3) Performing all bridge removal work associated with the demolition and disposal of skid bent foundation B2W.

4) Performing all bridge removal work associated with the demolition and disposal of the 4 concrete falsework foundations constructed to support the lowered Span YB4 truss. The 4 concrete foundations to be removed consist of the 2 eastern concrete pads of falsework Bent 8 and the 2 foundations for falsework Bent 9 that support the north and south truss falsework.

5) Performing all bridge removal work associated with the demolition and disposal of the 7 concrete foundations constructed to support the gantry system used to lower the Span YB4 truss onto falsework. The foundations to be removed include all foundations for the Skid Beam A gantry towers excluding the large foundation constructed above skid bent foundations A1W and A1E and the 2 minor foundations constructed between skid bent foundations A3W and A3E and all foundations for the Skid Beam B gantry towers excluding the 2 minor foundations constructed between skid bent foundations B1W and B1E.

6) Performing any repair work to the Bent W3R footing necessary due to any damage incurred during the demolition of the concrete foundations specified under Items No. 3 and No. 5 above.

For this work, the Contractor shall be compensated a lump sum of $3,152,900.00. Except for the items of work specifically excluded in this change order, this sum constitutes full and final compensation, including all markups, for all costs associated with the work of this change.

Under the terms of this change order, the Contractor assumes full ownership of all materials being removed.

Total Cost of Extra Work at Lump Sum $3,152,900.00

This change order excludes any costs associated with the backfill of the ETI area. Any costs associated with this work shall be paid under a separate change order.

CONTRACT CHANGE ORDER

Change Requested by: Engineer

CCO 217	Suppl. No. 0	Contract No. 04 - 0120R4	Road SF-80-12.6/13.2	FED. AID LOC.:

Flagging costs associated with the work of this change shall be paid under Change Order No. 1 with these costs being paid at 50% by the Department. The remaining flagging costs are considered to be included in the lump sum compensation provided under this change order.

The compensation paid under this change order includes all engineering and survey costs associated with the work of this change order and no additional compensation shall be paid.

Estimated Cost: Increase ☑ Decrease ☐ **$3,152,900.00**

By reason of this order the time of completion will be adjusted as follows: 0 days

Submitted by

Signature	Resident Engineer	Date
	BILL CASEY	10-3-09

Approval Recommended by

Signature	SFOBB Construction Manager	Date
Pete E. Siggenthal	MIKE FORNER	10-12-09

Engineer Approval by

Signature	SFOBB Construction Manager	Date
Michael Forner	MIKE FORNER	11/16/09

We the undersigned contractor, have given careful consideration to the change proposed and agree, if this proposal is approved, that we will provide all equipment, furnish the materials, except as may otherwise be noted above, and perform all services necessary for the work above specified, and will accept as full payment therefor the prices shown above.

NOTE: If you, the contractor, do not sign acceptance of this order, your attention is directed to the requirements of the specifications as to proceeding with the ordered work and filing a written protest within the time therein specified.

Contractor Acceptance by

Signature	(Print name and title)	Date
	DANIEL E. Hamick, PRESIDENT	11/06/09

STATE OF CALIFORNIA - DEPARTMENT OF TRANSPORTATION

CONTRACT CHANGE ORDER MEMORANDUM

TO: MIKE FORNER / DEANNA VILCHECK	FILE: E.A. 04 - 0120R4
	CO-RTE-PM SF-80-12.6/13.2
FROM: BILL CASEY	FED. NO.
CCO#: **217** SUPPLEMENT#: **0** Category Code: **CHPT**	CONTINGENCY BALANCE (incl. this change) **$48,731,483.59**
COST: **$3,152,900.00** INCREASE ☑ DECREASE ☐	HEADQUARTERS APPROVAL REQUIRED? ☑ YES ☐ NO
SUPPLEMENTAL FUNDS PROVIDED: **$0.00**	IS THIS REQUEST IN ACCORDANCE WITH ENVIRONMENTAL DOCUMENTS? ☑ YES ☐ NO
CCO DESCRIPTION: Skid Bent & ETI Foundation Demolition	**PROJECT DESCRIPTION:** CONSTRUCT ROUTE 80 TEMP BYPASS STRUCTURE

Original Contract Time:	Time Adj. This Change:	Previously Approved CCO Time Adjustments:	Percentage Time Adjusted: (including this change)	Total # of Unreconciled Deferred Time CCO(s): (including this change)
475 Day(s)	**0** Day(s)	**1195** Day(s)	**252** %	**7**

THIS CHANGE ORDER PROVIDES FOR:

the demolition and disposal of the East Tie-In skid bent system.

This project was awarded in March 2004 to construct a detour that will allow for the tie in of the new east span of the San Francisco Oakland Bay Bridge to Yerba Buena Island. The detour encompasses three main structures, the East Tie-In (ETI) to the existing bridge, the West Tie-In (WTI) to Yerba Buena Island and the Viaduct structure between the two tie ins.

The original contract was awarded as a performance based contract with the contractor responsible for the design of the structures based upon meeting specified design criteria. The Department issued a December 14, 2006 memo entitled Strategy for South-South Detour Contract Completion which was approved by Tony Anziano (Toll Bridge Program Manager), Richard Land (Chief Engineer) and subsequently by the TBPOC. This memo recommended that the design of the ETI structure be assumed by the Department as opposed to the as-bid performance based contractor design.

The new design of the ETI structure provides for a roll-out / roll-in concept with a new double deck steel truss span being erected adjacent to the existing span and then rolled into place after the existing span is rolled out. As part of this work, a skid bent system has been constructed to provide for the roll out of the existing truss and the roll in of the new truss. This change order provides for the demolition and disposal of the skid bent system.

The work encompassed under this change includes the demolition of over 3,000 metric tons of steel members including 24 steel tower legs up to 1.5 meters in diameter and 45 meters high and 2 approximately 100 meter long skid beams weighing over 4 metric tons per meter all being supported by extensive steel bracing and supports. The work also includes the demolition of 12 reinforced concrete foundations totaling to approximately 360 cubic meters of concrete and the demolition of 8 structural steel members that were installed to provide stability to the existing and new trusses during their roll out and roll in.

Compensation for the work of this change shall be paid as extra work at an agreed lump sum price of $3,152,900.00 which shall be financed from the contract's contingency funds. A cost analysis is on file.

Under the terms of this change order, the contractor assumes ownership of the structural steel associated with the skid bent removal. A commensurate credit for the salvage value of this steel, based on the current market value, is provided within the agreed lump sum compensation being paid.

No adjustment of contract time is warranted as the change does not affect the controlling operation.

This change was concurred with by Alec Melkonians - Asst. Project Manager and Hong Wong - Project Engineer. TBPOC Approval granted on 9/18/2009 for an amount not to exceed $4,500,000.00.

Maintenance concurrence is not required as the work will not affect and permanent roadway items.

ADA Notice: For individuals with sensory disabilities, this document is available in alternate formats. For information call: (916) 654-6410 or TDD (916) 654-3880 or write

CONTRACT CHANGE ORDER MEMORANDUM

CONCURRED BY:		
Construction Engineer:	Bill Casey, Resident Engineer	Date 10-3-09
Bridge Engineer:		Date
Project Engineer:	Hong Wong, PE	Date 9-29-09
Project Manager:	Alec Melkonians	Date 9-29-09
FHWA Rep.:		Date
Environmental:		Date
Other (specify):		Date
Other (specify):		Date
District Prior Approval By:		Date
HQ (Issue Approve) By:	Bob Molera, HQ CCO Engineer	Date 10-14-09
Resident Engineer's Signature:		Date 10-3-09

ESTIMATE OF COST

	THIS REQUEST	TOTAL TO DATE
ITEMS	$0.00	$0.00
FORCE ACCOUNT	$0.00	$0.00
AGREED PRICE	$3,152,900.00	$3,152,900.00
ADJUSTMENT	$0.00	$0.00
TOTAL	$3,152,900.00	$3,152,900.00

FEDERAL PARTICIPATION

☐ PARTICIPATING ☐ PARTICIPATING IN PART ☑ NONE
☐ NON-PARTICIPATING (MAINTENANCE) ☐ NON-PARTICIPATING

FEDERAL SEGREGATION (if more than one Funding Source or P.I.P. type)
☐ CCO FUNDED PER CONTRACT ☐ CCO FUNDED AS FOLLOWS

FEDERAL FUNDING SOURCE	PERCENT

ADA Notice: For individuals with sensory disabilities, this document is available in alternate formats. For information call: (916) 654-6410 or TDD (916) 654-3880 or write

CONTRACT CHANGE ORDER

Change Requested by: Engineer

CCO 219	Suppl. No. 0	Contract No. 04 - 0120R4	Road SF-80-12.6/13.2	FED. AID LOC.:

To: CC MYERS INC

You are directed to make the following changes from the plans and specifications or do the following described work not included in the plans and specifications for this contract. ***NOTE: This change order is not effective until approved by the Engineer.***

Description of work to be done, estimate of quantities and prices to be paid. (Segregate between additional work at contract price, agreed price and force account.) Unless otherwise stated, rates for rental of equipment cover only such time as equipment is actually used and no allowance will be made for idle time. This last percentage shown is the net accumulated increase or decrease from the original quantity in the Engineer's Estimate.

Extra Work at Lump Sum:

Provide compensation to the Contractor for all costs associated with the erection and installation of all steel plates, brackets, stiffeners and bolts necessary to incorporate the changes to the steel truss provided for under Change Order No. 207.

For this work, the Contractor shall be compensated an agreed lump sum of $625,410.00. This lump sum constitutes full and final compensation, including all markups, for all additional costs associated with this change.

Total Cost of Extra Work at Lump Sum $625,410.00

Costs associated with any rework required on the deck forms pertaining to pouring the ETI truss concrete deck incurred due to the erection and installation of all steel plates, brackets, stiffeners and bolts being performed under this change order are excluded from the compensation provided and will be compensated at force account under Change Order No. 207.

Estimated Cost: **Increase** ☑ **Decrease** ☐ **$625,410.00**

By reason of this order the time of completion will be adjusted as follows: 0 days

Submitted by

Signature	Resident Engineer BILL CASEY	Date 9-25-09

Approval Recommended by

Signature Deanna Vilcheck	Area Construction Manager DEANNA VILCHECK	Date 9/29/09

Engineer Approval by

Signature Michael Fraser	Area Construction Manager DEANNA VILCHECK	Date 11/17/09

We the undersigned contractor, have given careful consideration to the change proposed and agree, if this proposal is approved, that we will provide all equipment, furnish the materials, except as may otherwise be noted above, and perform all services necessary for the work above specified, and will accept as full payment therefor the prices shown above.

NOTE: If you, the contractor, do not sign acceptance of this order, your attention is directed to the requirements of the specifications as to proceeding with the ordered work and filing a written protest within the time therein specified.

Contractor Acceptance by

Signature	(Print name and title) DANIEL E. HUMICK, PRESIDENT	Date 11/6/09

STATE OF CALIFORNIA - DEPARTMENT OF TRANSPORTATION

CONTRACT CHANGE ORDER MEMORANDUM

TO: MIKE FORNER / DEANNA VILCHECK	FILE: E.A. 04 - 0120R4
FROM: BILL CASEY	CO-RTE-PM SF-80-12.6/13.2
	FED. NO.
CCO#: 219 SUPPLEMENT#: 0 Category Code: CHPA	CONTINGENCY BALANCE (incl. this change) $48,589,687.59
COST: $625,410.00 INCREASE ☑ DECREASE ☐	HEADQUARTERS APPROVAL REQUIRED? ☑ YES ☐ NO
SUPPLEMENTAL FUNDS PROVIDED: $0.00	IS THIS REQUEST IN ACCORDANCE WITH ENVIRONMENTAL DOCUMENTS? ☑ YES ☐ NO
CCO DESCRIPTION: ETI Truss Added Gusset Plate Erection	**PROJECT DESCRIPTION:** CONSTRUCT ROUTE 80 TEMP BYPASS STRUCTURE

Original Contract Time:	Time Adj. This Change:	Previously Approved CCO Time Adjustments:	Percentage Time Adjusted: (including this change)	Total # of Unreconciled Deferred Time CCO(s): (including this change)
475 Day(s)	0 Day(s)	1195 Day(s)	252 %	7

THIS CHANGE ORDER PROVIDES FOR:

providing for the erection of numerous added gusset plates to the East Tie-In truss.

This project, the Yerba Buena Island Detour (YBID), calls for the construction of a temporary detour for both eastbound and westbound I-80 traffic that will allow for the tie in of the new east span of the San Francisco Oakland Bay Bridge to Yerba Buena Island. The YBID encompasses three main structures, the East Tie-In to the existing bridge, the West Tie-In (WTI) to Yerba Buena Island, and the Viaduct structure between the two tie ins. The contract was awarded as a performance-based project with the contractor responsible for meeting the design criteria specified in the contract.

A December 14, 2006 Department strategy memorandum, approved by Tony Anziano, Toll Bridge Program Manager, and Richard Land, Chief Engineer, recommended that the Department assume the design responsibility for the East Tie-In (ETI) structure. Based on this memorandum, the design of the structure was changed from a design that incorporated the existing steel truss bridge with the new structure to a design that replaces the existing structure with a new structure (roll out / roll in).

Change Orders No. 129 and 140 provided for the fabrication and erection of the steel truss of the ETI structure. Toll Bridge Design has now issued additional plan sheets that provide design enhancements to the 2 panel points at both the upper and lower decks of the truss. These changes provide added gusset plates and various brackets at each connection in order to provide additional strength to those connections. The changes were incorporated under Change Order No. 207 and include approximately 15 metric tons of additional steel and both the addition and the replacement of thousands of high strength bolts. Change Order No. 207 deferred all costs associated with the installation and erection of this steel.

This change order shall provide compensation for the installation and erection of the added plates and brackets and the placement of all additional bolts. Considerable rework of the existing truss members shall also be required and compensated under this change order.

Compensation for the erection of the added plates and brackets shall be paid as extra work at an agreed lump sum of $625,410.00 which shall be financed from the contract's contingency funds. A cost analysis is on file.

Costs associated with any rework required on the deck forms pertaining to pouring the ETI truss concrete deck incurred due to the erection and installation of all steel plates, brackets, stiffeners and bolts being performed under this change order are excluded from the compensation provided and will be compensated at force account under Change Order No. 207. This work is estimated at approximately $10,000.00 and will be funded by the existing force account funds provided under that change order.

Authority to Proceed with this work was obtained from Headquarters Construction on August 27, 2009 for an amount not to exceed $750,000.00.

No adjustment of contract time is warranted as the change will not affect the controlling operation.

This change was concurred with by Alec Melkonians - Asst. Project Manager, Hong Wong - Project Engineer, and Lina Ellis - Structure Maintenance.

ADA Notice: For individuals with sensory disabilities, this document is available in alternate formats. For information call: (916) 654-6410 or TDD (916) 654-3880 or write Records and Forms Management, 1120 N Street, MS-89, Sacramento, CA 95814.

CONTRACT CHANGE ORDER MEMORANDUM

CONCURRED BY:		
Construction Engineer:	Bill Casey, Resident Engineer	Date 9/25/09
Bridge Engineer:		Date
Project Engineer:	Hong Wong, PE	Date 9/22/09
Project Manager:	Alec Melkonians	Date 9/22/09
FHWA Rep.:		Date
Environmental:		Date
Other (specify):	Lina Ellis, Maintenance	Date 9/22/09
Other (specify):		Date
District Prior Approval By:		Date
HQ (Issue Approve) By:	Bob Molera, HQ CCO Engineer	Date
Resident Engineer's Signature:		Date 9-25-09

ESTIMATE OF COST

	THIS REQUEST	TOTAL TO DATE
ITEMS	$0.00	$0.00
FORCE ACCOUNT	$0.00	$0.00
AGREED PRICE	$625,410.00	$625,410.00
ADJUSTMENT	$0.00	$0.00
TOTAL	$625,410.00	$625,410.00

FEDERAL PARTICIPATION

☐ PARTICIPATING ☐ PARTICIPATING IN PART ☑ NONE
☐ NON-PARTICIPATING (MAINTENANCE) ☐ NON-PARTICIPATING

FEDERAL SEGREGATION (if more than one Funding Source or P.I.P. type)
☐ CCO FUNDED PER CONTRACT ☐ CCO FUNDED AS FOLLOWS

FEDERAL FUNDING SOURCE	PERCENT

ADA Notice: For individuals with sensory disabilities, this document is available in alternate formats. For information call: (916) 654-6410 or TDD (916) 654-3880 or write Records and Forms Management, 1120 N Street, MS 89, Sacramento, CA 95814.

CONTRACT CHANGE ORDER

Change Requested by: Engineer

CCO 220	Suppl. No. 0	Contract No. 04 - 0120R4	Road SF-80-12.6/13.2	FED. AID LOC.:

To: **CC MYERS INC**

You are directed to make the following changes from the plans and specifications or do the following described work not included in the plans and specifications for this contract. ***NOTE: This change order is not effective until approved by the Engineer.***

Description of work to be done, estimate of quantities and prices to be paid. (Segregate between additional work at contract price, agreed price and force account.) Unless otherwise stated, rates for rental of equipment cover only such time as equipment is actually used and no allowance will be made for idle time. This last percentage shown is the net accumulated increase or decrease from the original quantity in the Engineer's Estimate.

Extra Work at Lump Sum:

As determined necessary by the Engineer and as shown on Sheets 2 to 11, furnish and install temporary lighting in the Temporary Bypass Structure to include the tunnel prior to the West Tie-In Structure.

For this work, the Contractor will be paid the sum of $198,000.00, which constitutes full compensation to include a temporary generator for the East Span lights on both the lower and upper deck during the Labor Day Weekend Roll in and all markups, for the work of this change.

Total Cost of Extra Work at Lump Sum $198,000.00

RECEIVED
2010 FEB 3
01-1503

Estimated Cost: Increase ☑ Decrease ☐ **$198,000.00**

By reason of this order the time of completion will be adjusted as follows: 0 days

Submitted by

Signature	Resident Engineer	Date
	BILL CASEY	10-20-09

Approval Recommended by

Signature	Area Construction Manager	Date
Deanna Vilcheck	DEANNA VILCHECK	10/26/09

Engineer Approval by

Signature	Area Construction Manager	Date
Deanna Vilcheck	DEANNA VILCHECK	11/17/09

We the undersigned contractor, have given careful consideration to the change proposed and agree, if this proposal is approved, that we will provide all equipment, furnish the materials, except as may otherwise be noted above, and perform all services necessary for the work above specified, and will accept as full payment therefor the prices shown above.

NOTE: If you, the contractor, do not sign acceptance of this order, your attention is directed to the requirements of the specifications as to proceeding with the ordered work and filing a written protest within the time therein specified.

Contractor Acceptance by

Signature	(Print name and title)	Date
	DANIEL E. HIMICK, PRESIDENT	11/06/09

DIST	COUNTY	ROUTE	KILOMETER POST TOTAL PROJECT	SHEET NO	TOTAL SHEETS
04	SF	80			

Caltrans Metric

Carol Light 08/19/09
REGISTERED ELECTRICAL ENGINEER DATE

REGISTERED PROFESSIONAL ENGINEER
CAROL LIGHT
No. 10145
Exp. 09/30/10
ELECTRICAL
STATE OF CALIFORNIA

PLANS APPROVAL DATE

PB Americas, Inc.
303 Second St., Suite 700N
San Francisco, CA 94107-1317

SILVERMAN & LIGHT
1201 PARK AVENUE - SUITE 100
EMERYVILLE, CA 94608-3632

The State of California or its officers or agents shall not be responsible for the accuracy or completeness of electronic copies of this plan sheet.

Caltrans now has a web site! To get to the web site, go to http://www.dot.ca.gov

GENERAL NOTES

1. All electrical work shall conform to (1999 and 2004) the latest issue of State of California Department of Transportation Standard Specifications and Standard Plans. These general notes and special provisions under this contract also apply. For any conflict of provisions, California State Guidelines apply.
2. All conduit routing is shown diagrammatically. Pull box locations are located and shown on plan drawings. The contractor shall provide additional pull boxes as required. Exact location of equipment and devices may be adjusted by field conditions or as directed by the Engineer.
3. Minimum conduit sizes shall be 21 mm. All conduits located outside shall be rigid galvanized steel, PVC coated.
4. All equipment and devices shall be provided with nameplate tags as shown in the drawings.
5. All feeders and branch circuits shall be provided with an equipment ground wire.
6. The Contractor shall label all conductors and cables per cable schedules.
7. The Contractor shall provide all conduits with permanent field markers and labels
8. The Contractor shall provide and install new armored cables on metal racks, troughs, in cable trays or secured to supports spaced not greater than 1500 mm apart.
9. The Contractor shall provide splice boxes for armored cables.
10. For other related work not shown on the plan sheets, see Electrical Special Provision.
11. Contractor to verify all controlling field dimensions before ordering or fabricating any material.
12. Provide and install new armored cables or conduit as shown, scheduled and as needed in construction. Support cables or conduit from surface using 41x41 channel, hot dipped galvanized and appropriate strut mounted clamps. See Detail. Support armored cables or conduit horizontally along Temporary Bypass Structure (TBS) using steel ladder cable trays.
13. New cable will be completely routed and tested before cutting existing circuits and/ or interconnecting new.
15. Contractor to provide expansion fittings or loops at bridge expansion joints or points of deflection. Provide stainless steel support grips to hold the weight of electrical cable as it loops or hangs in vertical, sloping or horizontal position.
16. All materials and equipment are subject to Engineers written approval.

ABBREVIATIONS

NOT LISTED IN CALTRANS STANDARD PLANS ES-1A AND ES-1B

CEC	California Electrical Code
Cont'd	Continued
EB	Eastbound
(E), Exist	Existing
G, GND, Gnd	Ground (ground cable)
GRS	Galvanized Rigid Steel
JB	Junction Box
kV	kilovolt
LD	Lower Deck
LPS	Low Pressure Sodium
mh	Man Hole
N.E.C.	National Electrical Code
PWR	Power
SFOBB	San Francisco Oakland Bay Bridge
UD	Upper Deck
V	Volt
W	Wire
WB	Westbound
YBI	Yerba Buena Island

SYMBOLS

NOT LISTED IN CALTRANS STANDARD PLANS ES-1A, ES-2B AND ES-1C

⟨1⟩	Sheet Notes, applicable only to the Drawing 1=Sequential number
[2]	Project notes, applicable for all drawings.
———	Conduit or Cable run, exposed
– – – –	Conduit run concealed in wall, concrete barrier, slab or routed underground duct bank

PROJECT NOTES

[1] Install new 3#6 + 1#8G armored cable on cable troy. Provide stainless steel cable clamp support every 1.5 meters.

[2] Provide fused splice connectors to each ungrounded conductors between line and ballast/transformer. Locate connectors inside splice box.

[3] Transition from tunnel wall to exposed face of retaining wall and rise to cable troy at south side of westbound roadway. Provide expansion fittings or loops at bridge expansion joints or point of deflection.

[4] Install new 1.0 kVA step-down transformer 480 V-120/240 V, 1-phase in Nema-4 enclosure adjacent to State furnished flashing beacon control panel. See sheet E-7 for more information. Provide 41 mm nipple between panels. Secure panels on the structure.

DRAWING No. / DRAWING TITLE

DRAWING No.	DRAWING TITLE
E-1	ELECTRICAL SYMBOLS, ABBREVIATIONS AND PROJECT NOTES TEMPORARY BYPASS STRUCTURE
E-2	TEMPORARY PORTAL LIGHTING TEMPORARY BYPASS STRUCTURE
E-3	FLASHING BEACONS-WESTBOUND TEMPORARY BYPASS STRUCTURE
E-4	FLASHING BEACONS-WESTBOUND TEMPORARY BYPASS STRUCTURE
E-5	FLASHING BEACONS-EASTBOUND TEMPORARY BYPASS STRUCTURE
E-6	FLASHING BEACON-EASTBOUND TEMPO RAY BYPASS STRUCTURE
E-7	FLASHING BEACON MOUNTING DETAILS TEMPORARY BYPASS STRUCTURE
E-8	DETAILS TEMPORARY PORTAL LIGHTING WIRING DIAGRAM TEMPORARY BYPASS STRUCTURE
E-9	DETAILS FLASHING BEACON WIRING DIAGRAM TEMPORARY BYPASS STRUCTURE
E-10	DETAILS TYPICAL CONDUIT/CABLE SUPPORT TEMPORARY BYPASS STRUCTURE

CONTRACT NO. 04-0120R4

CONTRACT CHANGE ORDER NO 220

SHEET 2 OF 11

ELECTRICAL SYMBOLS, ABBREVIATIONS AND PROJECT NOTES
TEMPORARY BYPASS STRUCTURE
NO SCALE

E-1

DESIGN OVERSIGHT	CALCULATED/ DESIGNED BY	CHECKED BY	DATE	REVISED BY	DATE REVISED
	BJ	CL			

STATE OF CALIFORNIA - DEPARTMENT OF TRANSPORTATION

Caltrans

LAST REVISION DATE PLOTTED => 8/20/2009

THIS PLAN ACCURATE FOR ELECTRICAL WORK ONLY

DGN FILE => G:\My projects\caltrans\2007\27000_2715-SSD FLASHING BEACONS\merged\SSD2_4120R3ug01.dgn

CU 04251 EA 0120R3

DIST	COUNTY	ROUTE	KILOMETER POST TOTAL PROJECT	SHEET NO.	TOTAL SHEETS
04	SF	80			

Carol Light — REGISTERED ELECTRICAL ENGINEER — 08/19/09 DATE

CAROL LIGHT No. 10145 EXP. 09/30/10 ELECTRICAL — REGISTERED PROFESSIONAL ENGINEER — STATE OF CALIFORNIA

PLANS APPROVAL DATE

PB Americas, Inc.
303 Second St., Suite 700N
San Francisco, CA 94107 1317

SILVERMAN & LIGHT
1201 PARK AVENUE - SUITE 100
EMERYVILLE, CA 94608-3632

The State of California or its officers or agents shall not be responsible for the accuracy or completeness of electronic copies of this plan sheet.

Caltrans now has a web site! To get to the web site, go to http://www.dot.ca.gov

Caltrans Metric

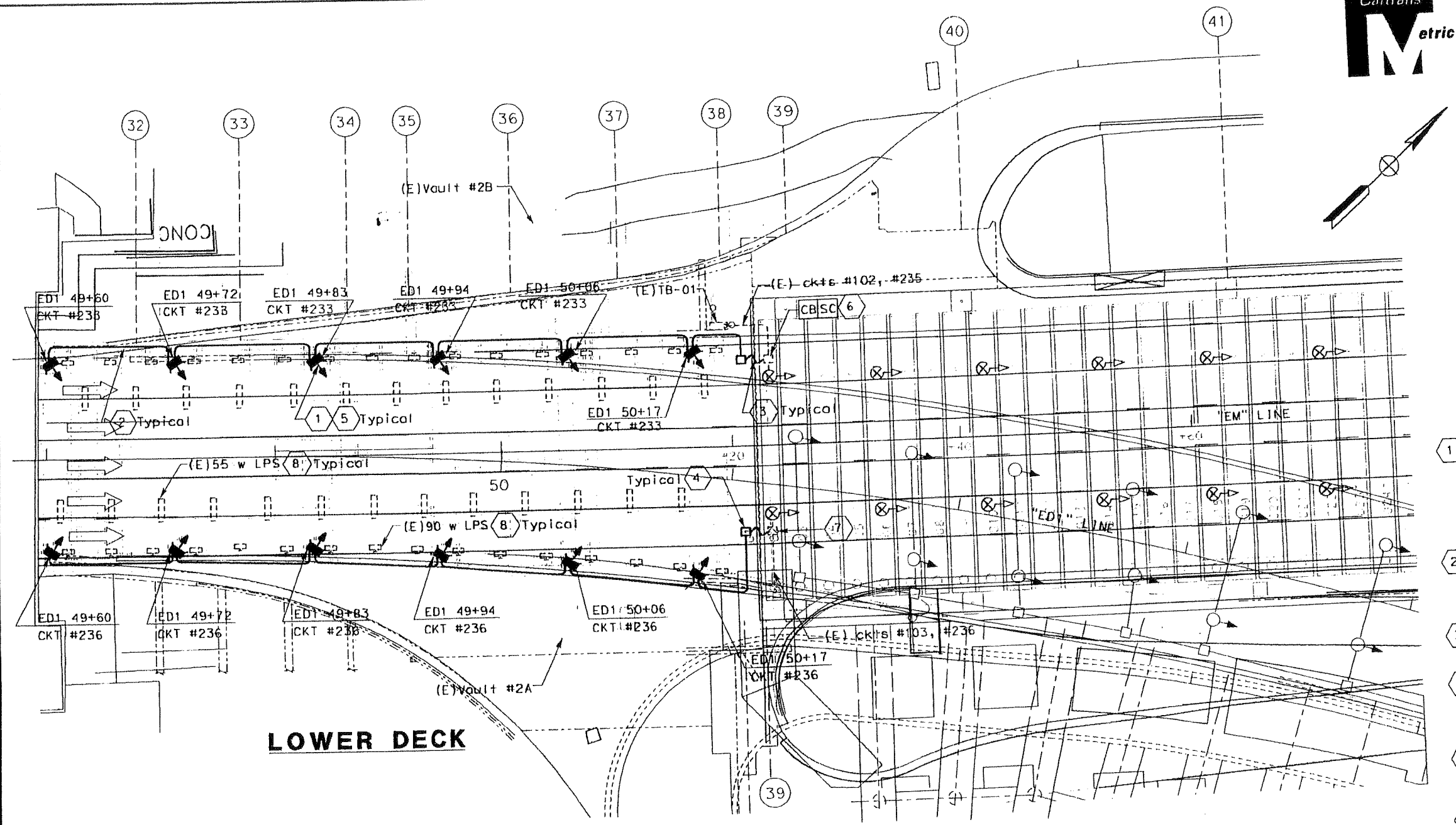

Direction of traffic

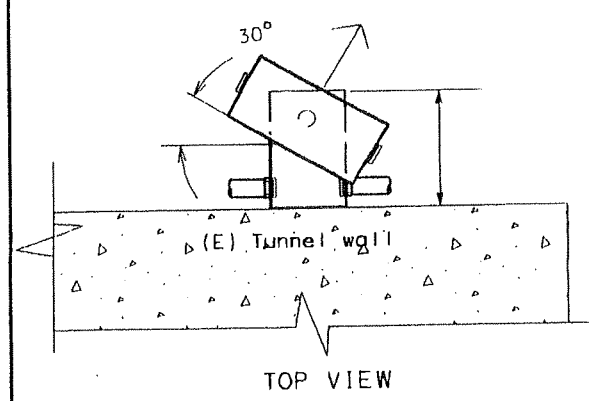

TOP VIEW

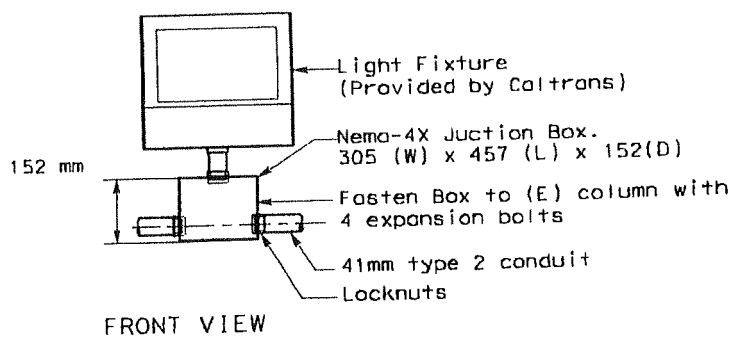

FRONT VIEW

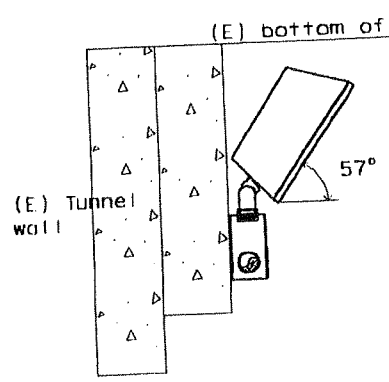

SIDE VIEW

TEMPORARY LIGHTING MUNTING DETAIL

SCALE: NONE

NOTES:

1. Reference:

   -for 600 V cable black diagram (Lighting), see Sheet E-8.

SHEET NOTES:

1. Install State furnished rugged die cast aluminum wide beam floodlight with 250 watts HPS with High power factor ballast, 480 volts. Mount fixture on the inside face of tunnel wall 0.153mm from top of fixture to the bottom of beam. See mounting Detail on this sheet.
2. Install new 41C-3 #6 + Gnd (CKT #235). Provide conduit support in every 3 meters. Route cable along the inside face existing structure. Provide unistrut and conduit clamps support every 1.5 meters.
3. Provide expansion joints or loops at bridge expansian joints or points of deflections.
4. Install new Nema type 4X splice box with minimum dimension of 305(L) x 305(W) x 152 (D). Fasten box on the ceiling with four (4) 10-24 concrete expansion anchars and hex head cap screws.
5. Provide fused splice connectors for each ungrounded conductors between the line and ballast. See Catrans standard ES-13B for fused connectors fuse ratings.
6. At (E) pull box, tap (E) circuit #233 and extend to new wall mounted light fixture.
7. At (E) pull box, tap (E) circuit #236 and extend to new wall mounted light fixture.
8. Existing light fixture to remain entact and funtional.

CONTRACT NO. 04-0120R4

CONTRACT CHANGE ORDER NO 220

SHEET 3 OF 11

TEMPORARY PORTAL LIGHTING
TEMPORARY BYPASS STRUCTURE

SCALE: 1:200

E-2

CALCULATED/ DESIGNED BY	DATE	REVISED BY	DATE REVISED
BJ			
CHECKED BY			
CL			

DESIGN OVERSIGHT

STATE OF CALIFORNIA - DEPARTMENT OF TRANSPORTATION

Caltrans

THIS PLAN ACCURATE FOR ELECTRICAL WORK ONLY

ALL DIMENSIONS ARE IN METERS UNLESS OTHERWISE SHOWN

0 20 40 60 80

DGN FILE => G:\My projects\caltrans\2007\27000_2715-SSD FLASHING BEACONS\merged\SSD2_4120R3sug02.dgn

CU 04251 EA 0120R3

LAST REVISION DATE PLOTTED => 8/20/2009

DIST	COUNTY	ROUTE	KILOMETER POST TOTAL PROJECT	SHEET NO	TOTAL SHEETS
04	SF	80			

Carol Light 08/19/09
REGISTERED ELECTRICAL ENGINEER DATE

PLANS APPROVAL DATE

CAROL LIGHT No. 10145 Exp. 09/30/10 ELECTRICAL — REGISTERED PROFESSIONAL ENGINEER — STATE OF CALIFORNIA

PB Americas, Inc.
303 Second St., Suite 700N
San Francisco, CA 94107 1317

SILVERMAN & LIGHT
1201 PARK AVENUE - SUITE 100
EMERYVILLE, CA 94608-3632

The State of California or its officers or agents shall not be responsible for the accuracy or completeness of electronic copies of this plan sheet.

Caltrans now has a web site! To get to the web site, go to http://www.dot.ca.gov

Caltrans Metric

DATE	REVISED BY
	DATE REVISED

CALCULATED/DESIGNED BY: BJ
CHECKED BY: CL
DESIGN OVERSIGHT

STATE OF CALIFORNIA - DEPARTMENT OF TRANSPORTATION
Caltrans

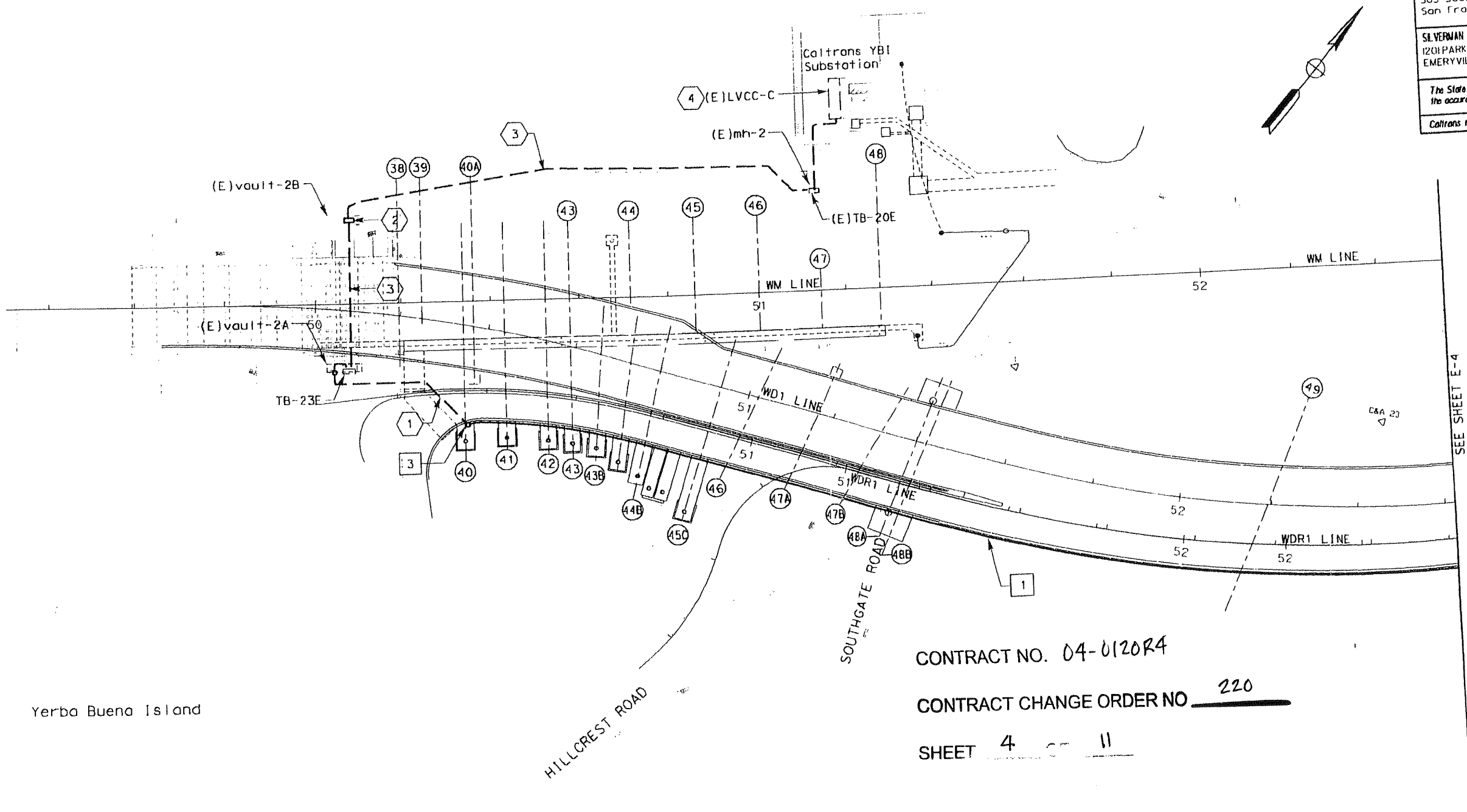

CONTRACT NO. 04-0120R4

CONTRACT CHANGE ORDER NO 220

SHEET 4 -- 11

PLAN-WESTBOUND

SHEET NOTES:

1. Mount the new 3#6 +1#8G armored cable on the inside face of existing retaining wall.
2. Install Nema 4X splice box, 305(L) x 305(W) x 152(D) minimum. Mount box inside (E) vault-2B. See sheet E-9 for more informatin.
3. Route 3#6 + 1#8G armored cable from (E) LVCC-C to TB-23E via (E) electrical duct, vault-2B and vault-2A.
4. Connect new 3#6 +1#8G armored cable to (E)50A/3P circuit breaker. Label circuit breaker "Temporary".

NOTES:

1. Contractor to verify all controlling dimensions and submit for engineer approval before ordering or fabricating any material.
2. See E-8 for flashing beacon block diagram.

FLASHING BEACONS
TEMPORARY BYPASS STRUCTURE

SCALE: 1:500

E-3

ALL DIMENSIONS ARE IN METERS UNLESS OTHERWISE SHOWN

THIS PLAN ACCURATE FOR ELECTRICAL WORK ONLY

DGN FILE => G:\My projects\caltrans\2007\27000_2715-SSD FLASHING BEACONS\merged\SSD2_4120R3ug03.dgn
CU 04251 EA 0120R3

LAST REVISION DATE PLOTTED => 8/20/2009

DIST	COUNTY	ROUTE	KILOMETER POST TOTAL PROJECT	SHEET No	TOTAL SHEETS
04	SF	80			

Caltrans Metric

Carol Light — 08/19/09
REGISTERED ELECTRICAL ENGINEER — DATE

REGISTERED PROFESSIONAL ENGINEER — CAROL LIGHT — No. 10145 — Exp. 09/30/10 ELECTRICAL — STATE OF CALIFORNIA

PLANS APPROVAL DATE

PB Americas, Inc.
303 Second St., Suite 700N
San Francisco, CA 94107-1317

SILVERMAN & LIGHT
1201 PARK AVENUE - SUITE 100
EMERYVILLE, CA 94608-3632

The State of California or its officers or agents shall not be responsible for the accuracy or completeness of electronic copies of this plan sheet.

Caltrans now has a web site! To get to the web site, go to http://www.dot.ca.gov

NOTES:

1. Contractor to verify all controlling dimensions and submit for engineer approval before ordering or fabricating any material.
2. See E-8 for flashing beacon block diagram.

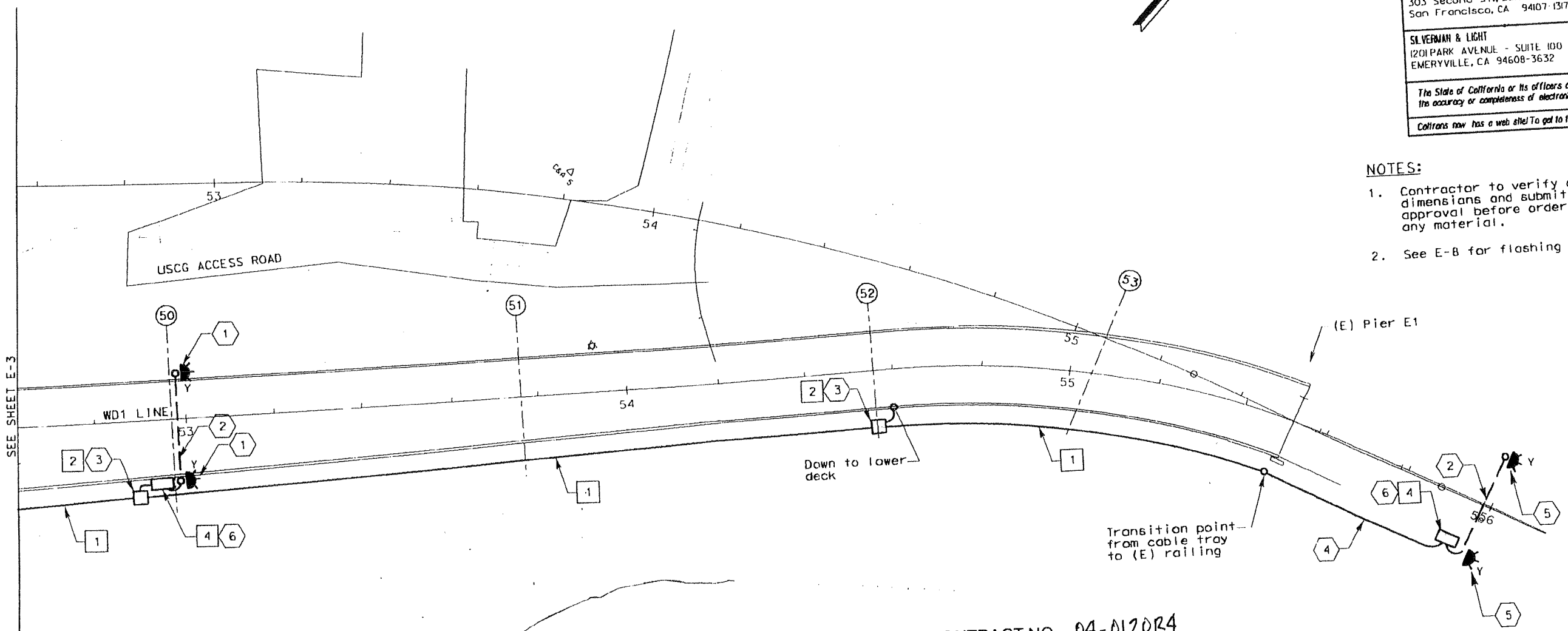

PLAN-WESTBOUND

CONTRACT NO. 04-0120R4

CONTRACT CHANGE ORDER NO 220

SHEET 5 of 11

SHEET NOTES:

1. Install State furnished flashing beacon assembly with two signal heads above sign at "WD1" 53+00. See detail E-7 for more information and standard drawing ES-7J.
2. Route 27 mm type 2 conduit with 3#10 + 1#12G below upper deck. Install unistrut and conduit clamps every 1.5 meters.
3. Install new Nema 4X splice box, 305(L) x 305(W) x 152(D) minimum. Secure box above cable tray using unistrut and cable fence bracket.
4. Route 3#6 +G armored cable from splice box to new 500VA transformer. Install cable on top of existing railing. Install unistrut and cable strap support every 1.5 meters.
5. Install State furnished flashing beacon assembly with two signal heads above sign at "WD1" 56+00. See detail E-7 for more information and standard drawing ES-7J.
6. Install State furnished flashing beacon control panel. See detail E-7 for more information and standard drawing ES-7J.

FLASHING BEACONS
TEMPORARY BYPASS STRUCTURE

SCALE: 1:500

E-4

ALL DIMENSIONS ARE IN METERS UNLESS OTHERWISE SHOWN

THIS PLAN ACCURATE FOR ELECTRICAL WORK ONLY

DGN FILE => G:\My projects\caltrans\2007\27000_2715-SSD FLASHING BEACONS\merged\SSD2_4120R3sup04.dgn

CU 04251 EA 0120R3

LAST REVISION DATE PLOTTED => 8/20/2009

STATE OF CALIFORNIA - DEPARTMENT OF TRANSPORTATION — DESIGN OVERSIGHT

CALCULATED/DESIGNED BY BJ — DATE

CHECKED BY CL — DATE REVISED

REVISED BY

DIST	COUNTY	ROUTE	KILOMETER POST TOTAL PROJECT	SHEET No	TOTAL SHEETS
04	SF	80			

Caltrans Metric

Carol Light 08/19/09
REGISTERED ELECTRICAL ENGINEER DATE

REGISTERED PROFESSIONAL ENGINEER CAROL LIGHT No. 10145 Exp. 09/30/10 ELECTRICAL STATE OF CALIFORNIA

PLANS APPROVAL DATE

PB Americas, Inc.
303 Second St., Suite 700N
San Francisco, CA 94107 1317

SILVERMAN & LIGHT
1201 PARK AVENUE - SUITE 100
EMERYVILLE, CA 94608-3632

The State of California or its officers or agents shall not be responsible for the accuracy or completeness of electronic copies of this plan sheet.

Caltrans now has a web site! To get to the web site, go to http://www.dot.ca.gov

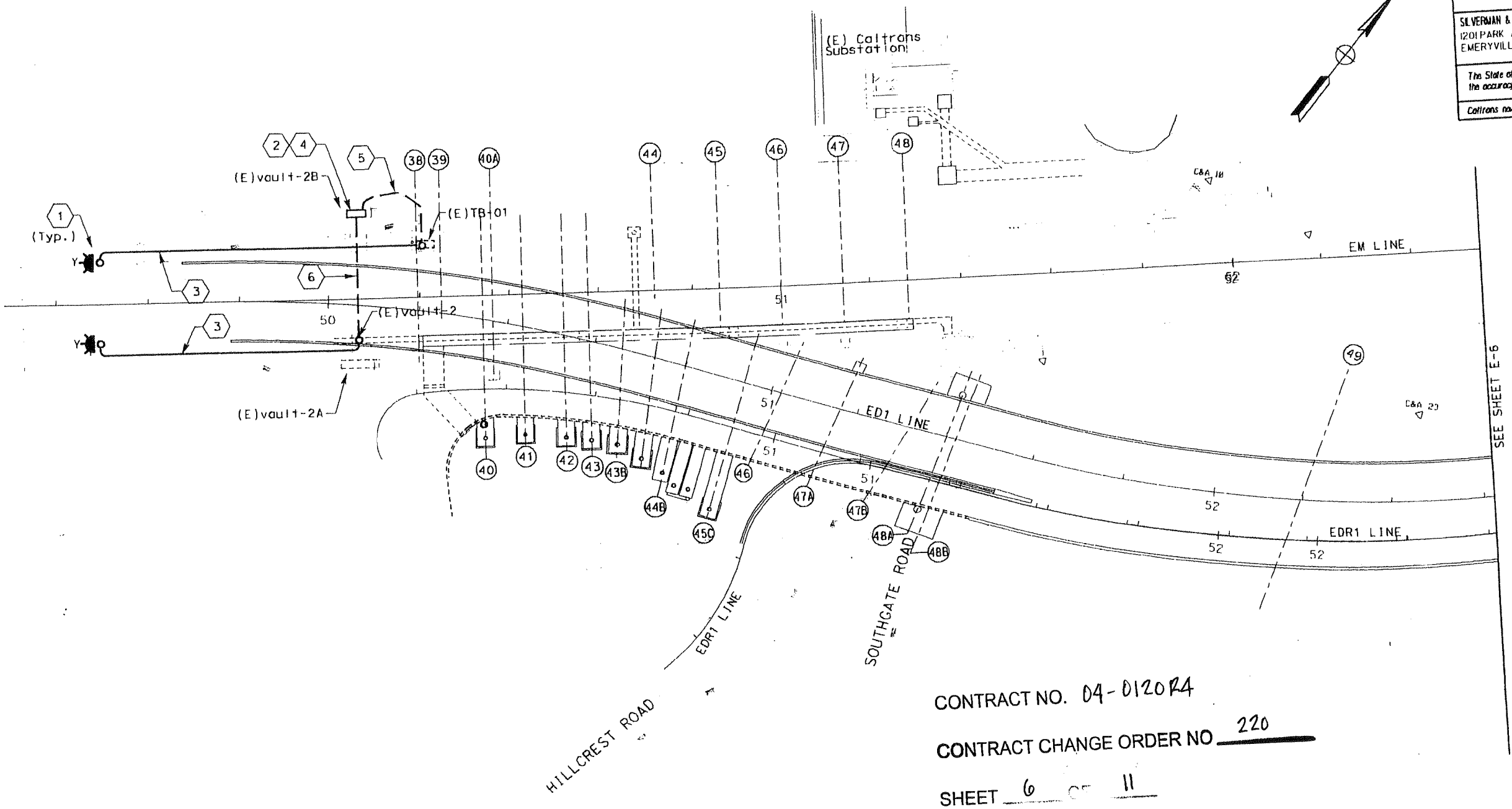

CONTRACT NO. 04-0120R4

CONTRACT CHANGE ORDER NO 220

SHEET 6 OF 11

PLAN-EASTBOUND

SHEET NOTES:

1. Install State furnished flashing beacon assembly with two signal heads above sign at "ED1" 54+50. See detail E-7 for more information and standard drawing ES-7J.
2. Install State furnished flashing beacon control panel inside vault-2B. Mount to (E) wall.
3. Install 27 mm type 2 conduit with 2#10 + 1#12G and secured to existing wall. Install unistrut and conduit clamps every 1.5 meters.
4. Install 500VA step-down transformer 480V-120V single phase in Nema 4X enclosure. Locate inside (E) vault adjacent to flashing beacon control. Provide 41 mm nipple between boxes.
5. Route cable from flashing beacon control panel to flashing beacon unit via existing vault, existing duct, to existing TB-01.
6. Route cable from flashing beacon control panel to flashing beacon unit on the south-side via existing vault, existing electrical duct and vault 2.

FLASHING BEACONS
TEMPORARY BYPASS STRUCTURE

SCALE: 1:500

E-5

ALL DIMENSIONS ARE IN METERS UNLESS OTHERWISE SHOWN

THIS PLAN ACCURATE FOR ELECTRICAL WORK ONLY

DGN FILE => G:\My projects\caltrans\2007\27000_2715-SSD FLASHING BEACONS\merged\SSD2_4120R3ug05.dgn

CU 04251 EA 0120R3

STATE OF CALIFORNIA - DEPARTMENT OF TRANSPORTATION

Caltrans

DESIGN OVERSIGHT

CALCULATED/DESIGNED BY BJ DATE REVISED BY

CHECKED BY CL DATE REVISED

LAST REVISION DATE PLOTTED => 8/20/2009

DIST	COUNTY	ROUTE	KILOMETER POST TOTAL PROJECT	SHEET No	TOTAL SHEETS
04	SF	80			

Caltrans Metric

Carol Light 08/19/09
REGISTERED ELECTRICAL ENGINEER DATE

REGISTERED PROFESSIONAL ENGINEER
CAROL LIGHT
No. 10145
Exp. 09/30/10
ELECTRICAL
STATE OF CALIFORNIA

PLANS APPROVAL DATE

PB Americas, Inc.
303 Second St., Suite 700N
San Francisco, CA 94107 1317

SILVERMAN & LIGHT
1201 PARK AVENUE - SUITE 100
EMERYVILLE, CA 94608-3632

The State of California or its officers or agents shall not be responsible for the accuracy or completeness of electronic copies of this plan sheet.

Caltrans now has a web site! To get to the web site, go to http://www.dot.ca.gov

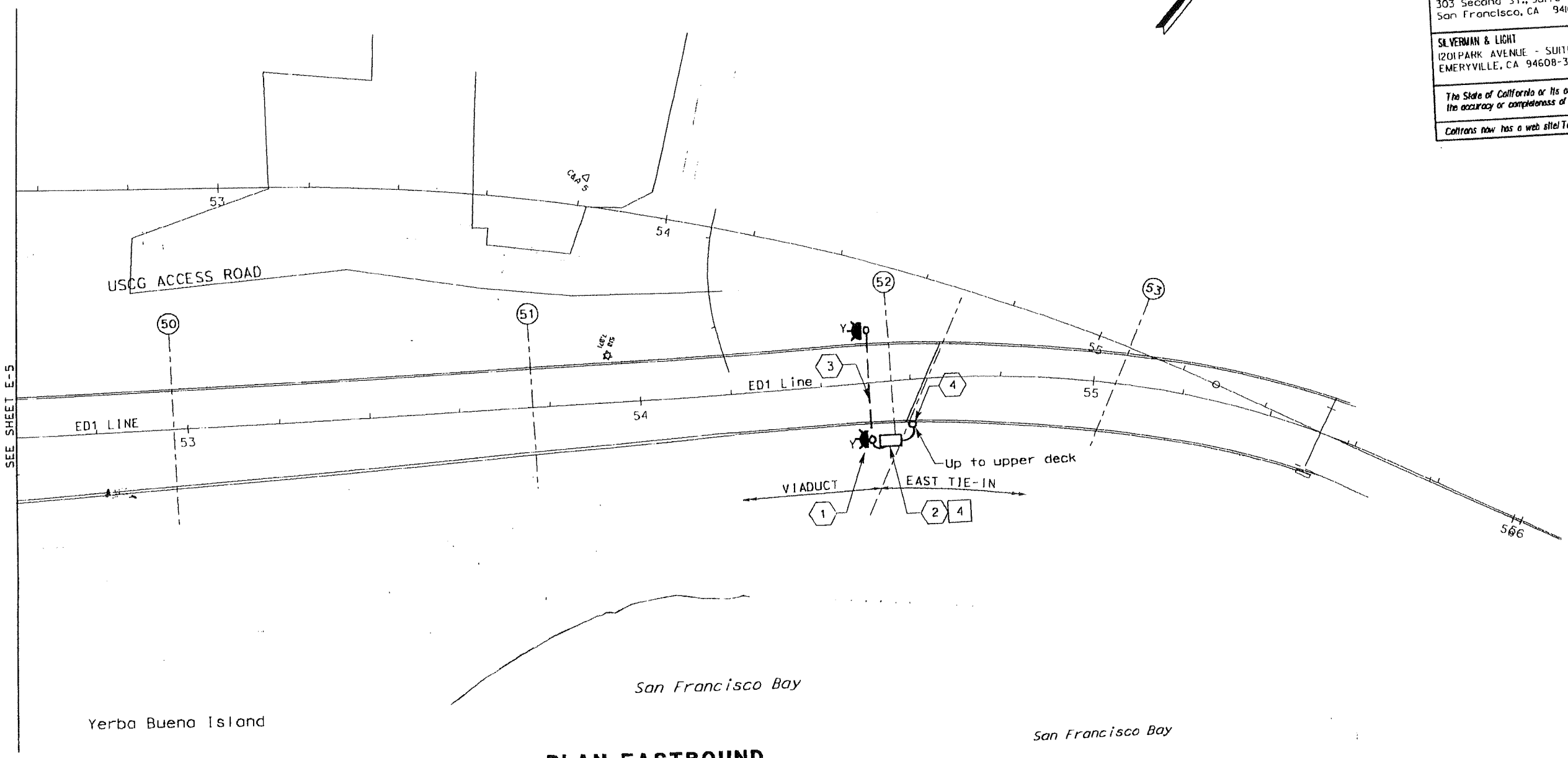

PLAN-EASTBOUND

SHEET NOTES:

1. Install State furnished flashing beacon assebly with two signal heads above sign at "ED1" 54+50. See detail E-7 for more information and standard drawing ES-7J.
2. Install State furnished flashing beacon control panel on the structure facing traffic. See detail E-7 for more information.
3. Route 27 mm type 2 conduit with 3#10 + 1#12G below upper deck. Install unistrut and conduit clamps every 1.5 meters.
4. Route 2#6 +G armored cable from transformer enclosure to new Nema 4X splice box on upper deck. Provide cable support (unistrut, cable clamp and beam clamps) every 1.5 meters.

CONTRACT NO. 04-0120R4

CONTRACT CHANGE ORDER NO 220

SHEET 7 OF 11

FLASHING BEACONS
TEMPORARY BYPASS STRUCTURE

SCALE: 1:500

E-6

ALL DIMENSIONS ARE IN METERS UNLESS OTHERWISE SHOWN

THIS PLAN ACCURATE FOR ELECTRICAL WORK ONLY

DGN FILE => G:\My projects\caltrans\2007\27000_2715-SSD FLASHING BEACONS\merged\SSD2_4120R3sup06.dgn

CU 04251 EA 0120R3

LAST REVISION DATE PLOTTED => 8/20/2009

STATE OF CALIFORNIA - DEPARTMENT OF TRANSPORTATION

DESIGN OVERSIGHT

CALCULATED/ DESIGNED BY

CHECKED BY

DATE	REVISED BY
	DATE REVISED
BJ	
CL	

DIST	COUNTY	ROUTE	KILOMETER POST TOTAL PROJECT	SHEET No	TOTAL SHEETS
04	SF	80			

Carol Light
REGISTERED ELECTRICAL ENGINEER — 08/19/09 DATE

REGISTERED PROFESSIONAL ENGINEER — CAROL LIGHT — No. 10145 — Exp. 09/30/10 — ELECTRICAL — STATE OF CALIFORNIA

PLANS APPROVAL DATE

PB Americas, Inc.
303 Second St., Suite 700N
San Francisco, CA 94107 1317

SILVERMAN & LIGHT
1201 PARK AVENUE - SUITE 100
EMERYVILLE, CA 94608-3632

The State of California or its officers or agents shall not be responsible for the accuracy or completeness of electronic copies of this plan sheet.

Caltrans now has a web site! To get to the web site, go to http://www.dot.ca.gov

Caltrans Metric

CONTRACT NO. 04-0120R4

CONTRACT CHANGE ORDER NO 220

SHEET 8 OF 11

STATE OF CALIFORNIA - DEPARTMENT OF TRANSPORTATION	DESIGN OVERSIGHT	CALCULATED/ DESIGNED BY	BJ	DATE	REVISED BY
Caltrans		CHECKED BY	CL		DATE REVISED

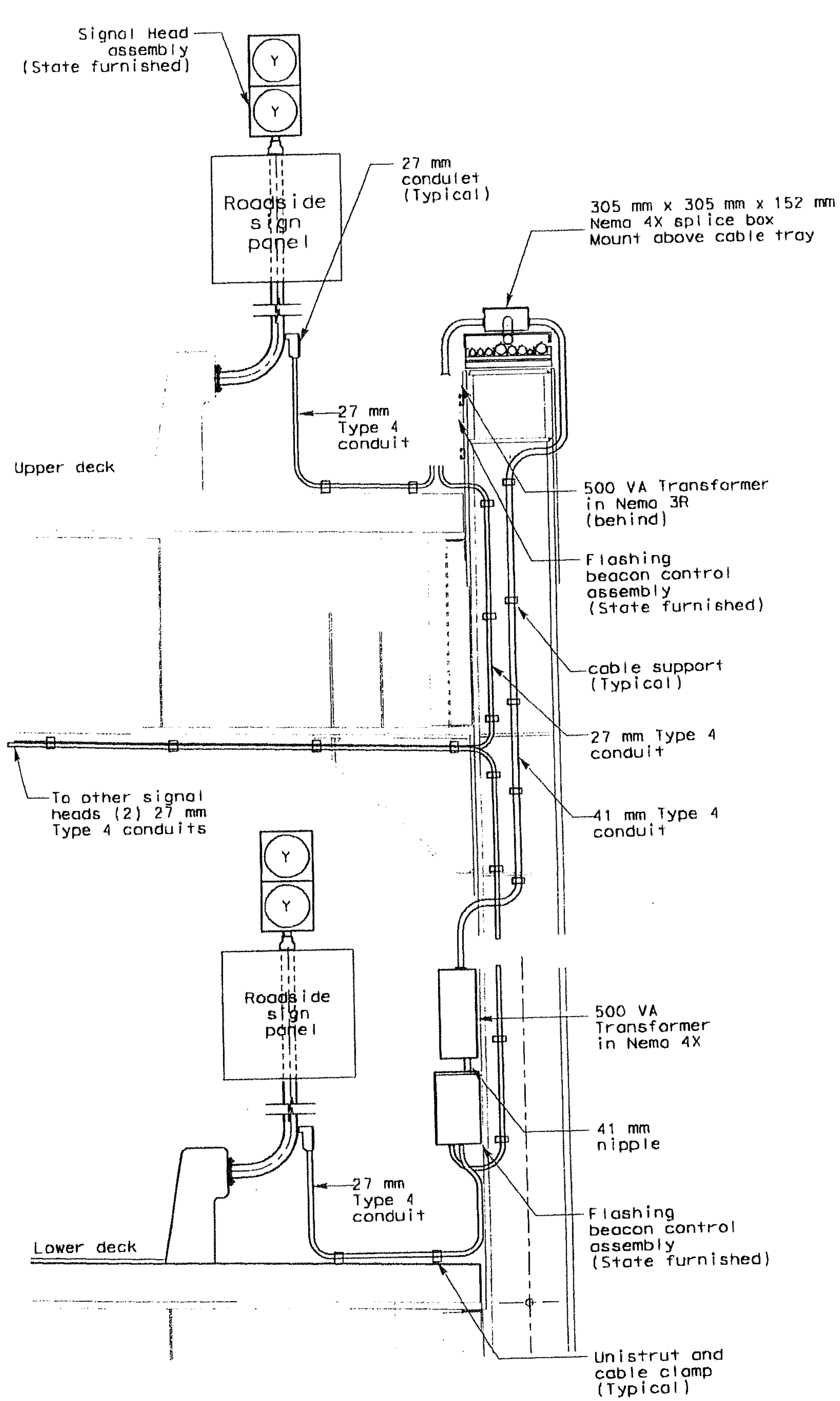

FLASHING BEACONS ON CONCRETE BARRIER

(VIADUCT)

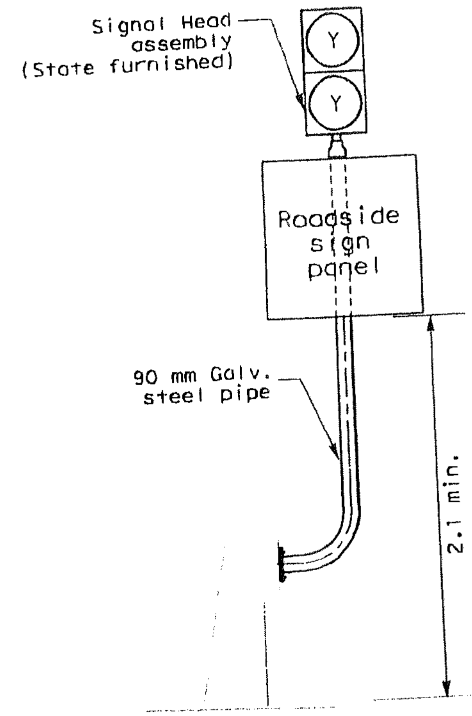

FLASHING BEACON CONNECTION TO BARRIER

SCALE: NONE

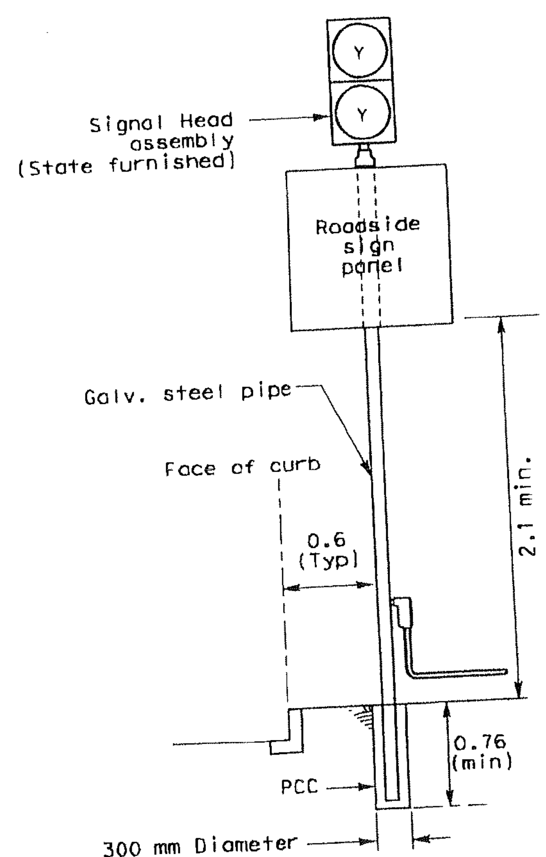

FLASHING BEACONS MOUNTED ON WALL

(AT "ED1" 49+50)

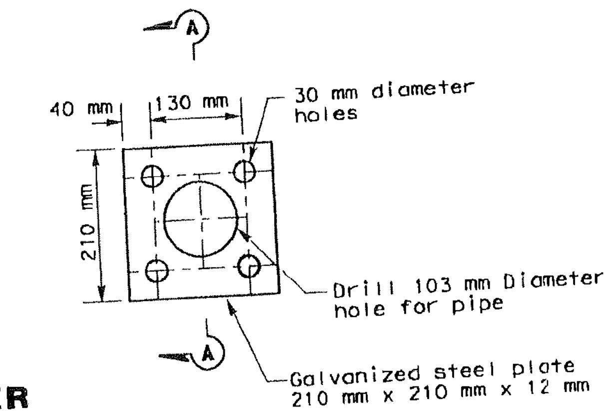

BASE PLATE DETAIL

SCALE: 1:5

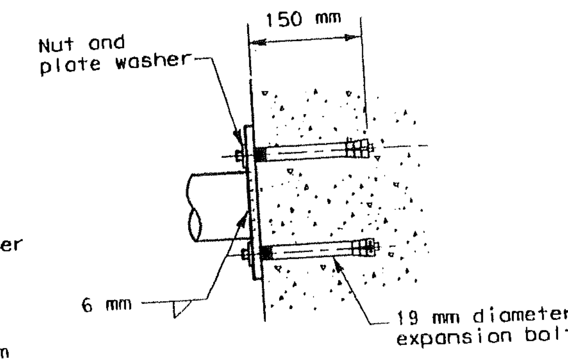

SECTION A-A

SCALE: 1:5

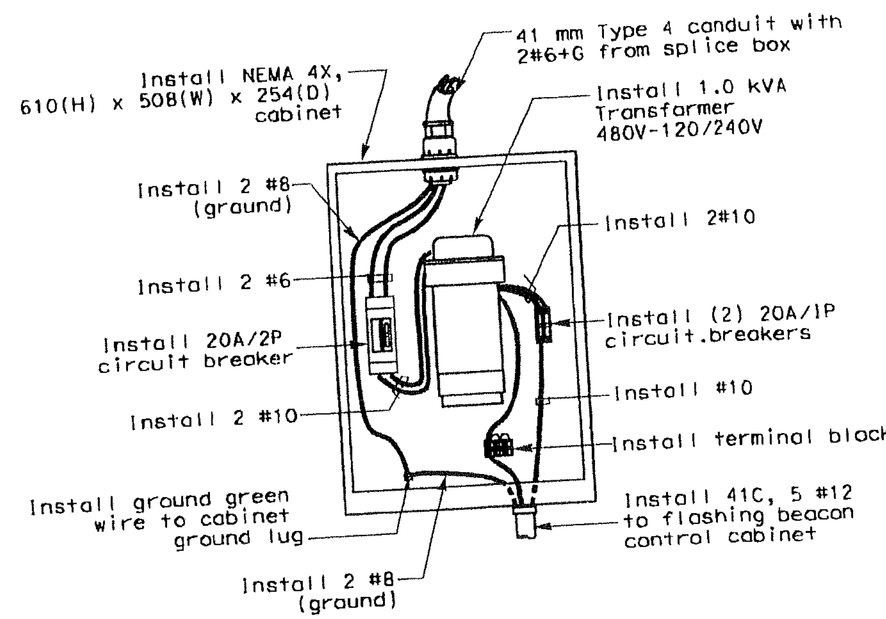

TRANSFORMER ENCLOSURE DETAIL

NO SCALE
(Front door not shown)

FLASHING BEACON MOUNTING DETAILS TEMPORARY BYPASS STRUCTURE

SCALE: 1:20

ALL DIMENSIONS ARE IN METERS UNLESS OTHERWISE SHOWN

THIS PLAN ACCURATE FOR ELECTRICAL WORK ONLY

DGN FILE => G:\My projects\caltrans\2007\27000_2715-SSD FLASHING BEACONS\merged\SSD2_4120R3ug07.dgn | CU 04251 | EA 0120R3

E-7

LAST REVISION | DATE PLOTTED => 8/20/2009

DIST	COUNTY	ROUTE	KILOMETER POST TOTAL PROJECT	SHEET No	TOTAL SHEETS
04	SF	80			

Carol Light — REGISTERED ELECTRICAL ENGINEER — 04/27/08 DATE

REGISTERED PROFESSIONAL ENGINEER — CAROL LIGHT — No. 10145 — Exp. 09/30/10 ELECTRICAL — STATE OF CALIFORNIA

PLANS APPROVAL DATE

PB Americas, Inc.
303 Second St., Suite 700N
San Francisco, CA 94107-1317

SILVERMAN & LIGHT
1201 PARK AVENUE - SUITE 100
EMERYVILLE, CA 94608-3632

The State of California or its officers or agents shall not be responsible for the accuracy or completeness of electronic copies of this plan sheet.

Caltrans now has a web site! To get to the web site, go to http://www.dot.ca.gov

Caltrans Metric

CONTRACT NO. 04-0120R4

CONTRACT CHANGE ORDER NO 220

SHEET 9 OF 11

(E)480 V LVCC-C Control Center
(Located at (E)YBI Substation Building)

480 V, 800 A, 42 kAIC, 3-phase, 3-wire + G

9 10 16 19 20

50 AT 100 AF — 60 A

ckt #102-A
ckt #103-A
ckt #233-A
ckt #235-A
ckt #236-A

(E) MH-2

(E) TB-20E

(E) TB-01

(E) Vault-2B

(E) Vault-2A

(E)PB

ckt #102-A
ckt #233-A
ckt #235-A

ckt #103-A
ckt #236-A

To temporary portal lighting

To existing viaduct lighting

"ED1" 49+60 / CKT #233
"ED1" 49+72 / CKT #233
"ED1" 49+83 / CKT #233
"ED1" 49+94 / CKT #233
"ED1" 50+06 / CKT #233
"ED1" 50+17 / CKT #233

(N)Pullbox

2 Typical

3 Typical

"ED1" 49+60 / CKT #236
"ED1" 49+72 / CKT #236
"ED1" 49+83 / CKT #236
"ED1" 49+94 / CKT #236
"ED1" 50+06 / CKT #236
"ED1" 50+17 / CKT #236

(N)Pullbox

NOTES:

1. Reference:
   - See plan E-2 for soffit light location

SHEET NOTES:

1. Intercept circuits #233 in (E) pullbox below upper deck structure. Provide type 4 conduit between (E) and (N) pull boxes.
2. Fused splice connectors to be used for each ungrounded conductors between line and ballast (Typical).
3. New armored Cables on (E) concrete wall.
4. Intercept circuits #236 in (E) pullbox below upper deck structure. Provide type 4 conduit between (E) and (N) pull boxes.

North side viaduct soffit lts.

(E)PB

To next soffit lighting

(F)PB

To next soffit lighting

North side viaduct soffit lts.

DETAILS
TEMPORARY PORTAL LIGHTING WIRING DIAGRAM
TEMPORARY BYPASS STRUCTURE

NO SCALE

E-8

DATE	REVISED BY	DATE REVISED
BJ		CL
CALCULATED/DESIGNED BY		CHECKED BY

DESIGN OVERSIGHT

STATE OF CALIFORNIA - DEPARTMENT OF TRANSPORTATION

Caltrans

THIS PLAN ACCURATE FOR ELECTRICAL WORK ONLY

DGN FILE =>G:\My projects\caltrans\2007\27000_2715-SSD FLASHING BEACONS\merged\SSD2_4120R3ug08.dgn

CU 04251 EA 0120R3

LAST REVISION DATE PLOTTED => 8/20/2009

DIST	COUNTY	ROUTE	KILOMETER POST TOTAL PROJECT	SHEET No	TOTAL SHEETS
04	SF	80			

Carol Light
REGISTERED ELECTRICAL ENGINEER
08/19/09
DATE

REGISTERED PROFESSIONAL ENGINEER
CAROL LIGHT
No. 10145
Exp. 09/30/10
ELECTRICAL
STATE OF CALIFORNIA

PLANS APPROVAL DATE

PB Americas, Inc.
303 Second St., Suite 700N
San Francisco, CA 94107-1317

SILVERMAN & LIGHT
1201 PARK AVENUE - SUITE 100
EMERYVILLE, CA 94608-3632

The State of California or its officers or agents shall not be responsible for the accuracy or completeness of electronic copies of this plan sheet.

Caltrans now has a web site! To get to the web site, go to http://www.dot.ca.gov

Caltrans Metric

SHEET NOTES:

1. At (E)LVCC-C, connect new 3#6 +1#8 armored cable to (E) spare 50A/3P circuit breaker. Route cable from LVCC-C to new flashing beacon control panel via (E) TB-23E, electrical duct and electrical vaults-22A and 2B.
2. Fused splice connectors to be used for each ungrounded conductors between line and ballast (Typical).
3. New armored Cables to Cable Tray to East Span.
4. Route new armored cable from splice box, to next splice box via (E) electrical duct, TB-2E and cable tray.
5. Route conduit from State furnished flashing control panel to State furnished flashing beacon unit via (E) electrical duct and (E)TB-01.
6. Existing TB-01 is located on the north retaining wall near Bent 38.

NOTES:

1. Reference:
   - For Cable routing, see plans E-3, E-4, E-5 and E-6

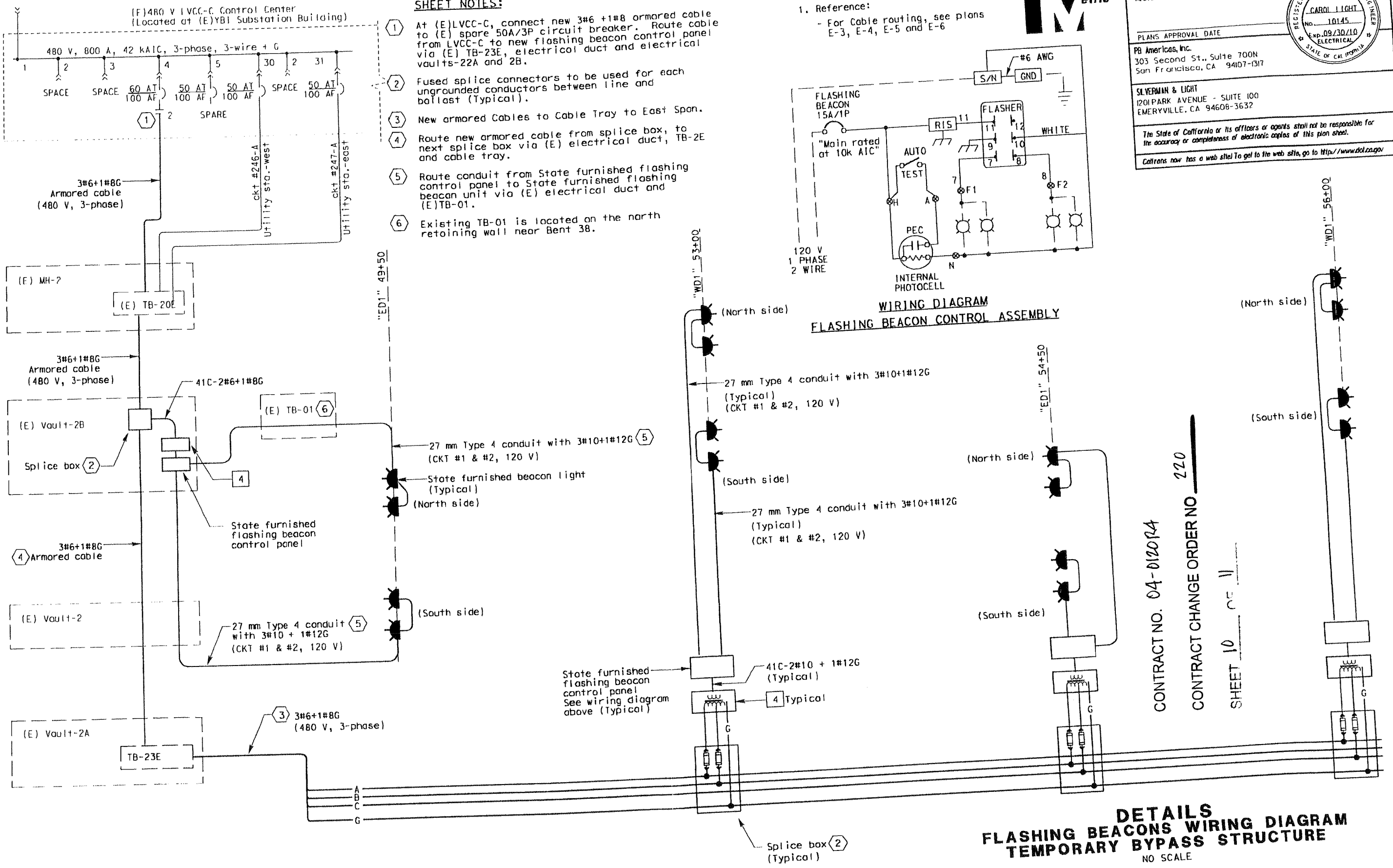

WIRING DIAGRAM
FLASHING BEACON CONTROL ASSEMBLY

CONTRACT NO. 04-0120R4
CONTRACT CHANGE ORDER NO 220
SHEET 10 OF 11

DETAILS
FLASHING BEACONS WIRING DIAGRAM
TEMPORARY BYPASS STRUCTURE
NO SCALE

E-9

STATE OF CALIFORNIA - DEPARTMENT OF TRANSPORTATION
Caltrans

CALCULATED/ DESIGNED BY	BJ	DATE	REVISED BY
CHECKED BY	CL		DATE REVISED

DESIGN OVERSIGHT

LAST REVISION | DATE PLOTTED => 8/20/2009

THIS PLAN ACCURATE FOR ELECTRICAL WORK ONLY

DGN FILE => G:\My projects\caltrans\2007\27000_2715-SSD FLASHING BEACONS\merged\SSD2_4120R3ug09.dgn

CU 04251 | EA 0120R3

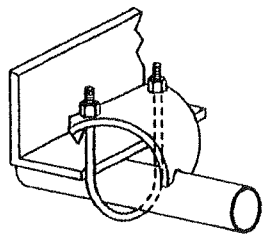

Conduit at right angles to the beam

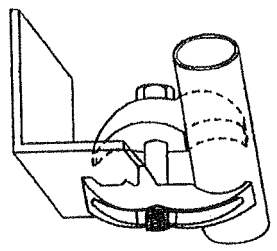

Conduit parallel to the beam

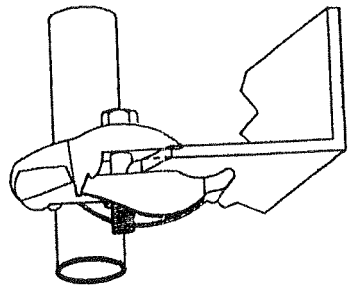

For mounting pipe or conduit vertically across beam edge

CONDUIT MOUNTING DETAILS

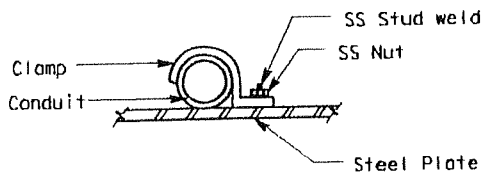

CONDUIT/CABLE MOUNTING DETAIL

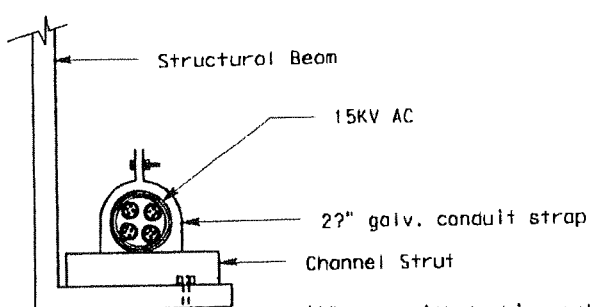

MOUNTING DETAIL FOR 15 kV AC UPPER DECK-SOUTH SIDE

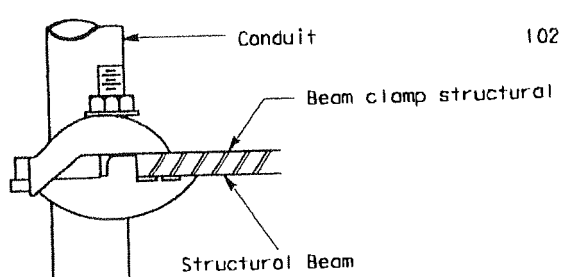

TYPICAL CONDUIT CLAMP MOUNTING

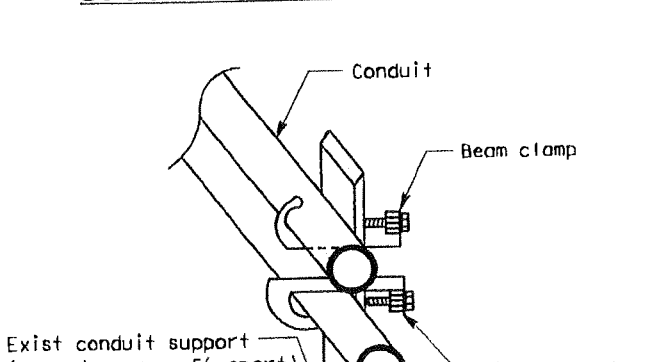

TYPICAL CONDUIT MOUNTING ON METAL STICK

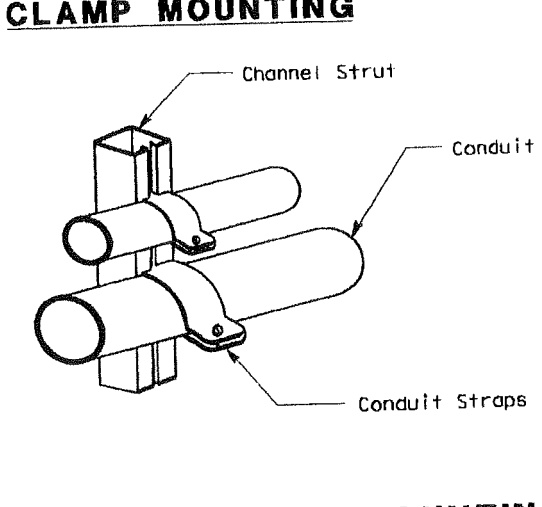

TYPICAL CONDUIT MOUNTING ON STRUT

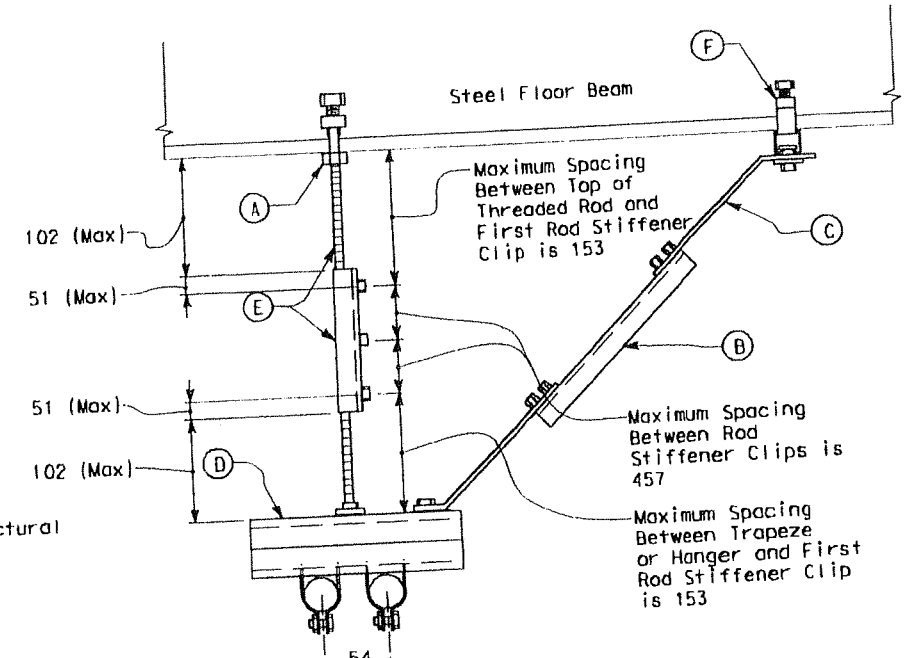

TYPICAL DETAIL

ARMORED CABLE MOUNTING DETAIL
BELOW LOWER DECK
NO SCALE

MATERIAL LIST

Item No.	Description
(A)	Beam C-Clamp with Locknut and Set Screw
(B)	Strut transverse brace for seismic support
(C)	Hinged seismic bracket with retaining clip
(D)	Strut channel, 41 mm x 82 mm
(E)	Threaded rod (13 mm) with stiffener & stiffener clips
(F)	C-Clamp with Locknut .

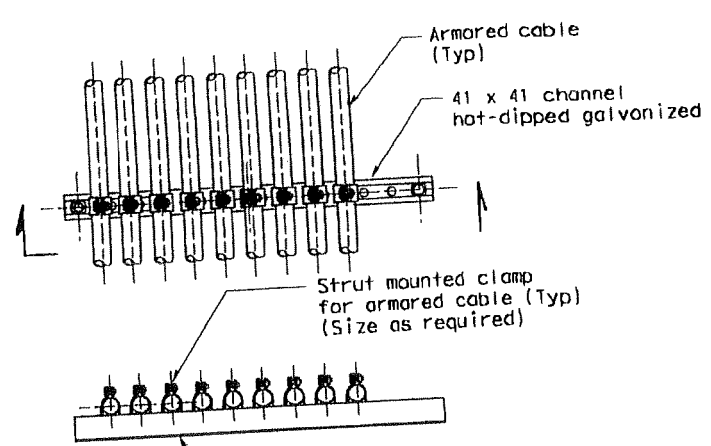

SECTION

TYPICAL DETAIL

ARMORED CABLE MOUNTING DETAIL
NO SCALE

CONTRACT NO. 04-0120R4

CONTRACT CHANGE ORDER NO 220

SHEET 11 OF 11

DETAILS
TYPICAL CONDUIT/CABLE SUPPORTS TEMPORARY BYPASS STRUCTURE

NO SCALE

E-10

DIST	COUNTY	ROUTE	KILOMETER POST TOTAL PROJECT	SHEET NO.	TOTAL SHEETS
04	SF	80			

Caltrans Metric

Carol Light 08/19/09
REGISTERED ELECTRICAL ENGINEER DATE

CAROL LIGHT No. 10145 Exp. 09/30/10 ELECTRICAL — REGISTERED PROFESSIONAL ENGINEER — STATE OF CALIFORNIA

PLANS APPROVAL DATE

PB Americas, Inc.
303 Second St., Suite 700N
San Francisco, CA 94107 1317

SILVERMAN & LIGHT
1201 PARK AVENUE - SUITE 100
EMERYVILLE, CA 94608-3632

The State of California or its officers or agents shall not be responsible for the accuracy or completeness of electronic copies of this plan sheet.

Caltrans now has a web site! To get to the web site, go to http://www.dot.ca.gov

DATE	REVISED BY	DATE REVISED

CALCULATED/DESIGNED BY BJ
CHECKED BY CL
DESIGN OVERSIGHT

STATE OF CALIFORNIA - DEPARTMENT OF TRANSPORTATION
Caltrans

THIS PLAN ACCURATE FOR ELECTRICAL WORK ONLY

DGN FILE = c:\My projects\caltrans\2007\27000_2715-SSD FLASHING BEACONS\merged\SSD2_4120R3ug10.dgn

CU 04251 EA 0120R3

LAST REVISION DATE PLOTTED = 8/20/2009

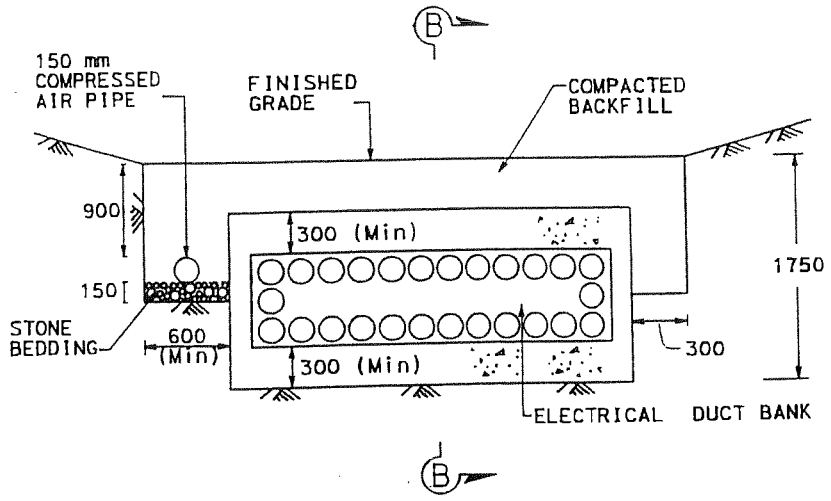

SECTION A-A

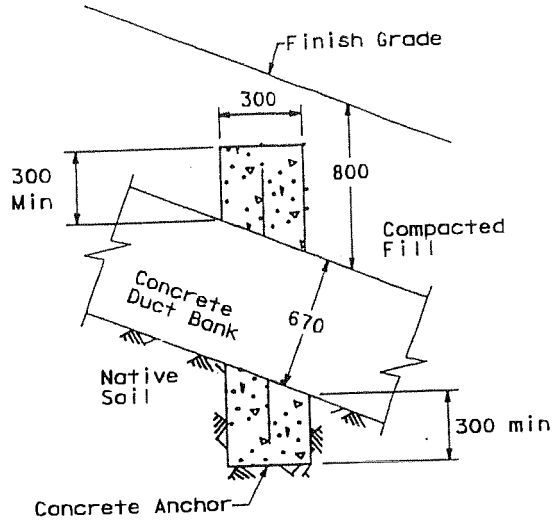

SECTION B-B

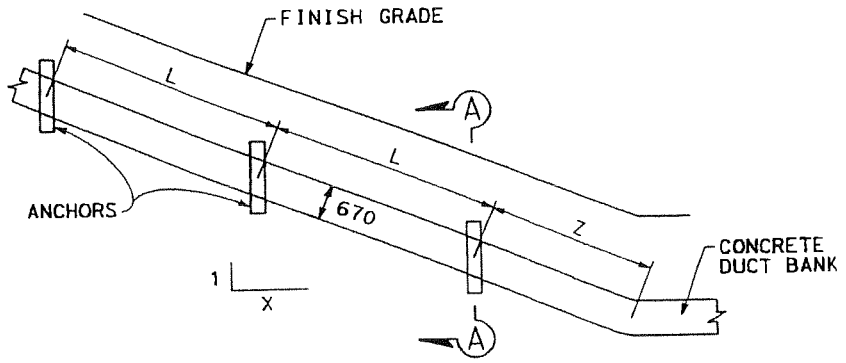

ELEVATION

CONCRETE DUCT BANK ANCHORS (3270mm (W) X 670mm (D))

TABLE A
(For 3270 X 670 DUCT BANK)

DUCT BANK SLOPE(1:X)	L (Max) (mm)	Z (Max) (mm)	Y (Max) (mm)
1:1	4570	1525	3000
1:1.5	5320	3000	4500
1:2	6140	4500	6000
1:2.5	6900	6000	7500
1:3	7500	7500	9000

TABLE B
(FOR 470 X 470 DUCT BANK)

DUCT BANK SLOPE(1:X)	LENGTH OF EXCAVATION IN STAGES (Max) (mm)	DUCT BANK ANCHOR SPACING (Max) (mm)
1:1	3000	5000
1:1.5	4500	6500
1:2	6000	8000
1:2.5	7500	9500
1:3	9000	11000

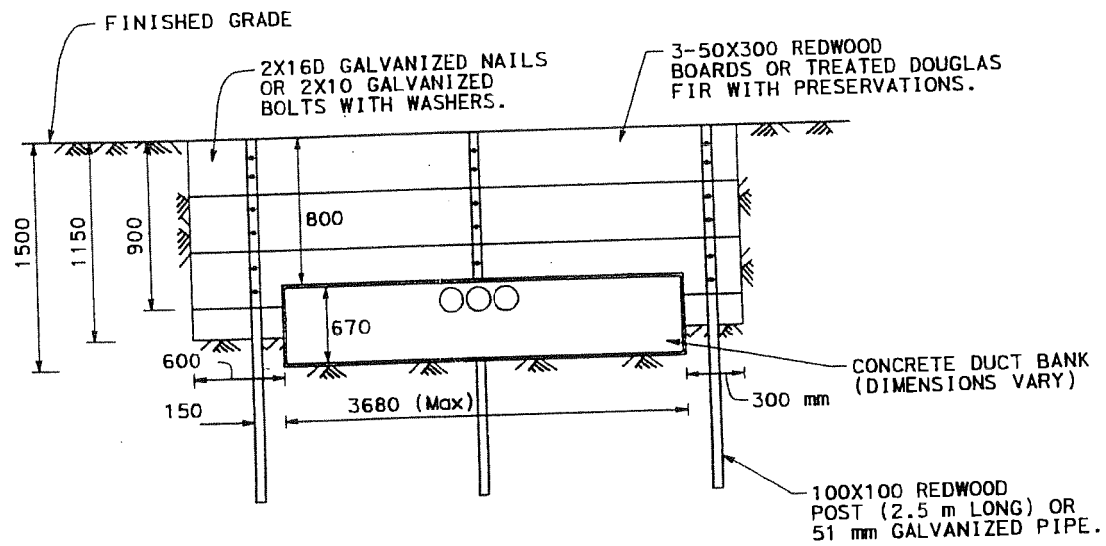

SECTION C-C

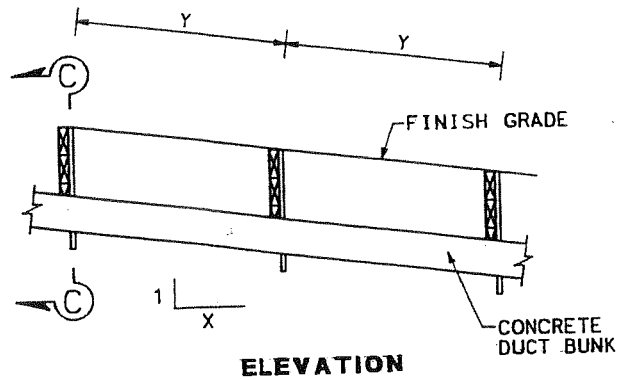

ELEVATION

SLOPE STABILIZER

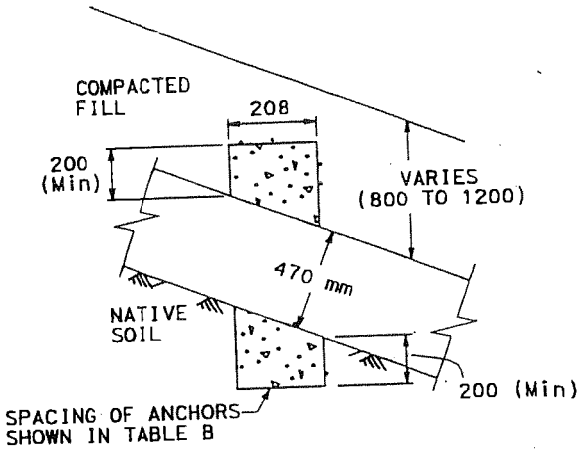

SPACING OF 470X470 DUCT BANK ANCHORS ON SLOPES

NOTES:

1. SPACING OF CONCRETE ANCHORS FOR DUCT BANK ON SLOPES BETWEEN VALVES SHOWN IN TABLE A MAY BE PROPORTIONED.
2. REDWOOD BOARDS SHALL BE PLACED ON THE HIGH GROUND SIDE OF THE POSTS.
3. TRENCH BACKFILL SHALL BE COMPACTED IN LIFTS. IN LIEU OF MECHANICAL COMPACTION, SOIL CEMENT MAY BE USED. HOWEVER, THE TOP 300MM OF BACKFILL SHALL BE NATIVE SOIL, MECHANICALLY COMPACTED.
4. SPACING OF GROUND STABILIZERS FOR SLOPES BETWEEN VALVES SHOWN IN TABLE A MAY BE PROPORTIONED.
5. FOR CONCRETE DUCT BANKS OF WIDTH SHORTER THAN 500MM, NO SHORING IS REQUIRED. HOWEVER, EXCAVATION SHALL BE CARRIED OUT IN STAGES WITH MAXIMUM LENGTH OF EXCAVATION SHOWN IN TABLE B.
6. TRENCH EXCAVATION PROPOSED HERE IN THIS DRAWING IS BASED UPON AN ASSUMPTION OF THE TRENCH BEING EXCAVATED IN DENSE SAND. SHOULD THE CONDITION OF SOIL DIFFER FROM WHAT IS ASSUMED HERE, THE CONTRACTOR SHALL STOP THE WORK AND NOTIFY THE ENGINEER IMMEDIATELY FOR INSTRUCTIONS.

ALL DIMENSIONS ARE IN MILLIMETERS UNLESS OTHERWISE SHOWN

DIST	COUNTY	ROUTE	KILOMETER POST TOTAL PROJECT	SHEET No	TOTAL SHEETS
04	SF	80	12.6/13.2	28	137

Caltrans Metric

11-27-06
REGISTERED CIVIL ENGINEER

REGISTERED PROFESSIONAL ENGINEER
T.T. Lai
No. 63630
Exp. 9-30-08
CIVIL
STATE OF CALIFORNIA

PLANS APPROVAL DATE

The State of California or its officers or agents shall not be responsible for the accuracy or completeness of electronic copies of this plan sheet.

To get to the Caltrans web site, go to: http://www.dot.ca.gov

CONTRACT NO. 04-0120Z4
CONTRACT CHANGE ORDER NO 232

SHEET 2 OF 2

UTILITY DETAILS

DUCT BANK & MANHOLES

NO SCALE

UD-4

DESIGNED BY T. T. LAI
CHECKED BY
DATE REVISED
LAST REVISION 11-06-06
DATE PLOTTED => 28-NOV-2006
TIME PLOTTED => 20:42

Caltrans PROJECT DEVELOPMENT

STATE OF CALIFORNIA - DEPARTMENT OF TRANSPORTATION

CONTRACT CHANGE ORDER MEMORANDUM

DATE: 9/21/2009 Page 1 of 1

TO: MIKE FORNER / DEANNA VILCHECK	FILE: E.A. 04 - 0120R4
	CO-RTE-PM SF-80-12.6/13.2
FROM: BILL CASEY	FED. NO.
CCO#: 220 SUPPLEMENT#: 0 Category Code: CBPC	CONTINGENCY BALANCE (incl. this change) $48,278,166.59
COST: $198,000.00 INCREASE ☑ DECREASE ☐	HEADQUARTERS APPROVAL REQUIRED? ☐ YES ☑ NO
SUPPLEMENTAL FUNDS PROVIDED: $0.00	IS THIS REQUEST IN ACCORDANCE WITH ENVIRONMENTAL DOCUMENTS? ☑ YES ☐ NO
CCO DESCRIPTION: Flashing Beacon and Tunnel Lighting	**PROJECT DESCRIPTION:** CONSTRUCT ROUTE 80 TEMP BYPASS STRUCTURE

Original Contract Time:	Time Adj. This Change:	Previously Approved CCO Time Adjustments:	Percentage Time Adjusted: (including this change)	Total # of Unreconciled Deferred Time CCO(s): (including this change)
475 Day(s)	0 Day(s)	1195 Day(s)	252 %	7

THIS CHANGE ORDER PROVIDES FOR:

Furnish and install temporary lighting in the Temporary Bypass Structure to include the tunnel prior to the West Tie-In Structure.

The YBID was awarded in March 2004 to construct a detour that will allow for the tie in of the new east span of the San Francisco Oakland Bay Bridge to Yerba Buena Island. The YBID encompasses three main structures, the East Tie-In to the existing bridge, the West Tie-In (WTI) to Yerba Buena Island, and the Viaduct structure between the two tie ins.

Two separate Department strategy memorandums, dated December 14, 2006 and December 25, 2006, approved by Tony Anziano - Toll Bridge Program Manager and Richard Land - Chief Engineer, recommended that the Department assume responsibility for the designs of the East Tie-In (ETI) and West Tie-In (WTI) portions of this contract, and incorporated seismic retrofit work of the permanent Yerba Buena Island Transition Structure (YBITS) onto this project. The approval of these strategy memorandums extended the project completion date approximately 5 years.

This change order is necessary to provide sufficient illumination inadvertently not placed in the original contract plans. In addition, it will further enhance public safety for the traveling public in the Temporary Bypass Structure.

Compensation for this work shall be paid for as extra work at an agreed lump sum price of $198,000.00, which shall be financed from the contract's contingency funds. A cost analysis is on file.

Alec Melkonians - Asst. Project Manager, Hong Wong - Project Engineer, and Lina Ellis - Maintenance concurred with this change.

No adjustment of contract time is warranted as the work will not affect the controlling operation.

CONCURRED BY:			
Construction Engineer:	Jeannie Balderramos	Date	10-23-09
Bridge Engineer:		Date	
Project Engineer:	Hong Wong, PE	Date	9/30/09
Project Manager:	Alec Melkonians	Date	9/22/09
FHWA Rep.:		Date	
Environmental:		Date	
Other (specify):	Lina Ellis, Maintenance	Date	10/22/09
Other (specify):		Date	
District Prior Approval By:		Date	
HQ (Issue Approve) By:		Date	
Resident Engineer's Signature:		Date	10-20-09

ESTIMATE OF COST

	THIS REQUEST	TOTAL TO DATE
ITEMS	$0.00	$0.00
FORCE ACCOUNT	$0.00	$0.00
AGREED PRICE	$198,000.00	$198,000.00
ADJUSTMENT	$0.00	$0.00
TOTAL	$198,000.00	$198,000.00

FEDERAL PARTICIPATION

☐ PARTICIPATING ☐ PARTICIPATING IN PART ☑ NONE
☐ NON-PARTICIPATING (MAINTENANCE) ☐ NON-PARTICIPATING

FEDERAL SEGREGATION (if more than one Funding Source or P.I.P. type)
☐ CCO FUNDED PER CONTRACT ☐ CCO FUNDED AS FOLLOWS

FEDERAL FUNDING SOURCE	PERCENT

ADA Notice: For individuals with sensory disabilities, this document is available in alternate formats. For information call: (916) 654-6410 or TDD (916) 654-3880 or write

STATE OF CALIFORNIA - DEPARTMENT OF TRANSPORTATION

CONTRACT CHANGE ORDER

Change Requested by: Engineer

CCO 221	Suppl. No. 0	Contract No. 04 - 0120R4	Road SF-80-12.6/13.2	FED. AID LOC.:

To: **CC MYERS INC**

You are directed to make the following changes from the plans and specifications or do the following described work not included in the plans and specifications for this contract. ***NOTE: This change order is not effective until approved by the Engineer.***

Description of work to be done, estimate of quantities and prices to be paid. (Segregate between additional work at contract price, agreed price and force account.) Unless otherwise stated, rates for rental of equipment cover only such time as equipment is actually used and no allowance will be made for idle time. This last percentage shown is the net accumulated increase or decrease from the original quantity in the Engineer's Estimate.

Extra Work at Force Account:

As authorized by the Engineer and as shown on Sheets 2 and 3 of this change, furnish and install a transition cover plate a Bent 47 column of the West Tie-In adjacent to the E/B 80 On-ramp.

Estimated Cost of Extra Work at Force Account $25,000.00

Estimated Cost: Increase ☑ Decrease ☐ **$25,000.00**

By reason of this order the time of completion will be adjusted as follows: 0 days

Submitted by

Signature	Resident Engineer	Date
	BILL CASEY	10-3-09

Approval Recommended by

Signature	Area Construction Manager	Date
Deanna Vilcheck	DEANNA VILCHECK	10/12/09

Engineer Approval by

Signature	Area Construction Manager	Date
Deanna Vilcheck	DEANNA VILCHECK	12/1/09

We the undersigned contractor, have given careful consideration to the change proposed and agree, if this proposal is approved, that we will provide all equipment, furnish the materials, except as may otherwise be noted above, and perform all services necessary for the work above specified, and will accept as full payment therefor the prices shown above.

NOTE: If you, the contractor, do not sign acceptance of this order, your attention is directed to the requirements of the specifications as to proceeding with the ordered work and filing a written protest within the time therein specified.

Contractor Acceptance by

Signature	(Print name and title)	Date
	STEVE FRANCIS, CMER ESTIMATOR	10.23.09

CONTRACT NO. 04-0120R4

CONTRACT CHANGE ORDER NO 221

SHEET 2 OF 3

DIST	COUNTY	ROUTE	KILOMETER POST TOTAL PROJECT	SHEET No	TOTAL SHEETS
04	SF	80	12.6/13.2		

REGISTERED CIVIL ENGINEER

PLANS APPROVAL DATE

REGISTERED PROFESSIONAL ENGINEER — No. — EXP. — CIVIL — STATE OF CALIFORNIA

PB AMERICAS INC.
303 Second St., Suite 700N
San Francisco, CA 94107-1317

The State of California or its officers or agents shall not be responsible for the accuracy or completeness of electronic copies of this plan sheet.

Caltrans now has a web site! To get to the web site, go to http://www.dot.ca.gov

REGISTERED PROFESSIONAL ENGINEER — C 60145 — EXP. 6/30/10 — CIVIL — STATE OF CALIFORNIA

DATE REVISED BY — DATE REVISED

CALCULATED/DESIGNED BY

CHECKED BY

DESIGN OVERSIGHT — C. Hong Wong

STATE OF CALIFORNIA - DEPARTMENT OF TRANSPORTATION — Caltrans

"EM" 49+78.026 POT=
"ED1" 49+78.026 BC

CRASH CUSHION ARRAY 'U14'

"ED1" 49+85.59 8.55 Lt
BEGIN CONCRETE BARRIER (TYPE K)

"ED1" 50+14.987 LIMIT OF AC OVERLAY

LIMIT OF AC OVERLAY CONFORM

"ED1" 50+72.870 LIMIT OF AC OVERLAY

"ED1" 50+91.595 END OF AC OVERLAY

"EM" LINE

N 41° 31' 00" E
408.620

"ED1" 51+27.576 8.55 Rt BB
END CONCRETE BARRIER (TYPE K)
BEGIN Conc BARRIER (TYPE 732)

"ED1" LINE

"ED1" 50+21.129 8.55 Rt
BEGIN CONCRETE BARRIER (TYPE K)
TIE TO EXISTING Conc BARRIER

LIMIT OF AC OVERLAY CONFORM TO EXIST PAVEMENT

REMOVE EXISTING CONCRETE BARRIER (TYPE K)

"ED1" 50+70.727 EC

REMOVE COLUMNS (Typ)
SEE STRUCTURE PLANS

"EDR1" 50+95.153 0.6 Lt BB
END CONCRETE BARRIER (TYPE K)
BEGIN Conc BARRIER (TYPE 732)

REMOVE EXISTING CONCRETE BARRIER

15:1 TAPER

"EDR1" 50+55.631, 1.84 Lt
BEGIN CONCRETE BARRIER (TYPE K)

"EDR1" 50+63.110 FCC

"EDR1" 50+54.327
END AC OVERLAY

"EDR1" 50+36.148 BC

BEGIN AC OVERLAY

"EDR1" 50+48.314 15.96 Rt
BEGIN CONCRETE BARRIER (TYPE K)

"ED1" 51+24.168 8.55 Rt BB
END CONCRETE BARRIER (TYPE K)
BEGIN Conc BARRIER (TYPE 732)

"ED1" 51+41.746 8.55 Rt EB

N 59° 13' 16" E
88.414

COVER PLATE

CONSTRUCTION LIMIT

TEMPORARY BYPASS STRUCTURE
Br No.34-0006 (Temp)

"EDR1" LINE

"ED1" 51+01.697 EC

"ED1" 51+59.142 BC

"EDR1" 51+12.972
5.7 Rt EB

"EDR1" 50+91.209 5.7 Rt BB
END CONCRETE BARRIER (TYPE K)
BEGIN Conc BARRIER (TYPE 732)

TCE

FROM

TO

CURVE DATA						
NO.	R	△	T	L	N	E
①	50	30°53'48"	13.818	26.962	647070.968	1835877.863
②	24.50	90°14'13"	24.602	38.586	647109.356	1835941.711
③	300	17°42'17"	46.723	92.701	646852.347	1836028.556
④	28.70	40°11'8"	10.495	20.122	647113.940	1835950.491
⑤	18.70	65°10'52"	11.955	21.274	647109.302	1835941.628
⑥	18.40	83°02'40"	16.292	26.669	647111.220	1835933.471

LAYOUT (EB)

SCALE: 1:250

L-2R1

RELATIVE BORDER SCALE IS IN MILLIMETERS — 0 20 40 60 80

DGN FILE => Autoturn eo002_V7.dgn
USERNAME => s129303

LAST REVISION 00-00-00 — DATE PLOTTED => 27-AUG-2009 — TIME PLOTTED => 13:07

CU 04251

EA 0120R1

DIST.	COUNTY	ROUTE	POST MILES TOTAL PROJECT	SHEET NO.	TOTAL SHEETS

REGISTERED ENGINEER - CIVIL

PLANS APPROVAL DATE

The State of California or its officers or agents shall not be responsible for the accuracy or completeness of electronic copies of this plan sheet.

REGISTERED PROFESSIONAL ENGINEER — No. ____ Exp. ____ CIVIL — STATE OF CALIFORNIA

REGISTERED PROFESSIONAL ENGINEER — CHEUK HONG WONG — C 60144 — EXP 6/30/10 — CIVIL — STATE OF CALIFORNIA

CONTRACT NO. 04-0120R4

CONTRACT CHANGE ORDER NO 221

SHEET 3 OF 3

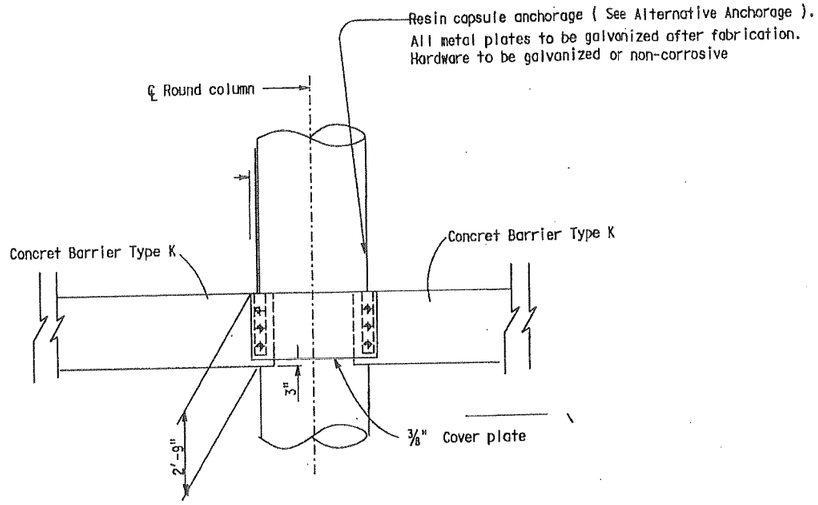

ELEVATION

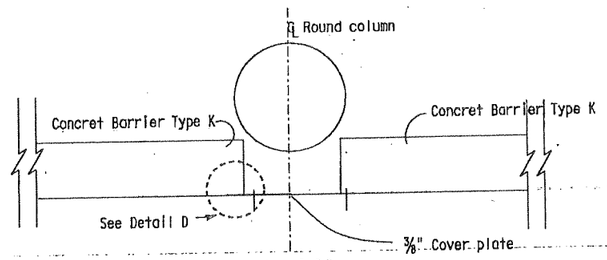

PLAN

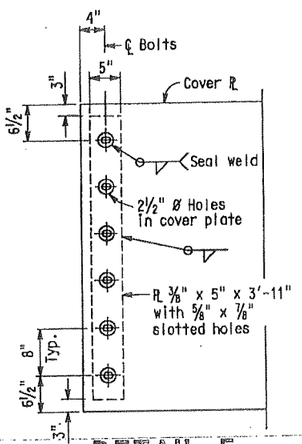

DETAIL F

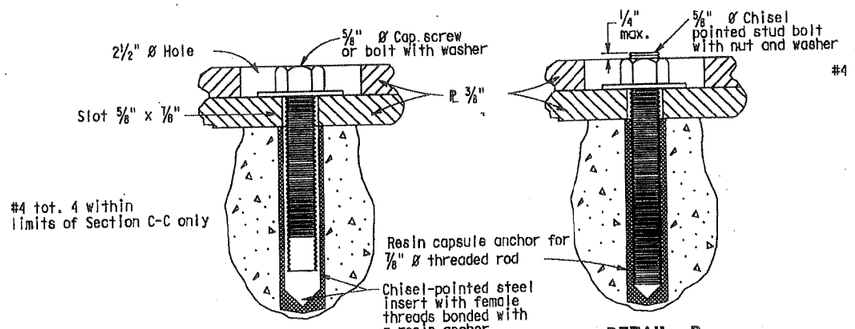

DETAIL A **DETAIL B**

ALTERNATIVE ANCHORAGE

NOTES: 1) Resin capsule anchorage is subject to approval of the Engineer. Installation procedures shall comply with manufacturer's instructions. 2) Detail B similar to Detail A except for anchorage devices.

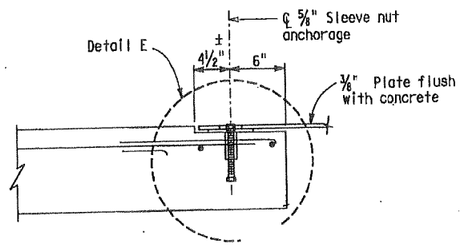

DETAIL D

NO SCALE

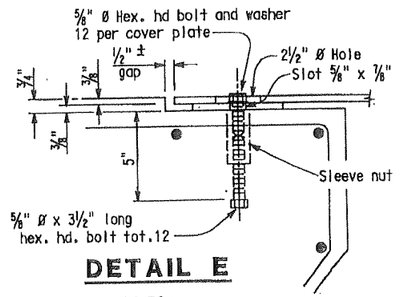

DETAIL E

NOTES:

1. Contractor options for fill between barrier walls.
   - (A) Place 2'-0" PCC at base between barrier walls.
   - (B) Place granular material from base to bottom of 4" cap.
2. Forming material for 4" cap may remain in place.
3. Enclose column with 4" expanded polystyrene at locations where concrete or cement treated base encases the column.
4. For Detail G, see Transition at Bridge Column sheet 2 of 2.

STANDARD DRAWING						
FILE NO. xs16-090-1e	APPROVED BY T SATTER (RESPONSIBLE TECHNICAL SPECIALIST)	RELEASED BY ROBERTO LACALLE (RESPONSIBLE OFFICE CHIEF)	STATE OF CALIFORNIA DEPARTMENT OF TRANSPORTATION	DIVISION OF ENGINEERING SERVICES	BRIDGE NO.	BARRIER-CONCRETE TYPE 60R
	APPROVAL DATE 4-15-08	RELEASE DATE 4-15-08			POST MILE	TRANSITION AT BRIDGE COLUMN
DS OSD 2147A (ENGLISH STANDARD DRAWING "XS" BORDER REV. 01/11/08)	ORIGINAL SCALE IN INCHES FOR REDUCED PLANS 0 1 2 3	CU EA	DISREGARD PRINTS BEARING EARLIER REVISION DATES →	REVISION DATES (PRELIMINARY STAGE ONLY)	SHEET 1	OF 2
			USERNAME => s129303		xs16-090-1e.dgn	

DATE PLOTTED => 27-AUG-2009 TIME PLOTTED => 13:05

STATE OF CALIFORNIA - DEPARTMENT OF TRANSPORTATION

CONTRACT CHANGE ORDER MEMORANDUM

TO: MIKE FORNER / DEANNA VILCHECK	FILE: E.A. 04 - 0120R4
FROM: BILL CASEY	CO-RTE-PM SF-80-12.6/13.2
	FED. NO. ACBRIM-080-1(097)N
CCO#: **224** SUPPLEMENT#: **0** Category Code: **BZZZ**	CONTINGENCY BALANCE (incl. this change) **$55,375,400.59**
COST: **$400,000.00** INCREASE ☑ DECREASE ☐	HEADQUARTERS APPROVAL REQUIRED? ☑ YES ☐ NO
SUPPLEMENTAL FUNDS PROVIDED: **$0.00**	IS THIS REQUEST IN ACCORDANCE WITH ENVIRONMENTAL DOCUMENTS? ☑ YES ☐ NO
CCO DESCRIPTION: Treasure Island Material Storage Yard	**PROJECT DESCRIPTION:** CONSTRUCT ROUTE 80 TEMP BYPASS STRUCTURE

Original Contract Time:	Time Adj. This Change:	Previously Approved CCO Time Adjustments:	Percentage Time Adjusted: (including this change)	Total # of Unreconciled Deferred Time CCO(s): (including this change)
475 Day(s)	**0** Day(s)	**1195** Day(s)	**252** %	**7**

THIS CHANGE ORDER PROVIDES FOR:

the lease of a stockpile site adjacent to the project.

This contract provides for the construction of a temporary detour for both eastbound and westbound I-80 traffic that allows for the tie in of the east span of the new San Francisco Oakland Bay Bridge (SFOBB) to Yerba Buena Island. The detour will allow for the construction of the permanent structure, the Yerba Buena Island Transition Structure, which connects the signature SAS structure to Yerba Buena Island.

The detour consist of three main structures, the East Tie-In (ETI) to the bridge, the West Tie-In (WTI) to the island and the Viaduct structure between the two tie ins. The contract was awarded as a performance-based project with the Contractor responsible for meeting the design criteria specified in the contract.

Two separate Department strategy memos, dated December 14, 2006 and December 25, 2006 and both approved by Tony Anziano, Toll Bridge Program Manager, Richard Land, Chief Engineer and subsequently the TBPOC, recommended that the Department assume the design responsibility for the ETI and WTI structures structure and recommended the advance construction, within this contract, of numerous foundation and columns from the Yerba Buena Island Transition Structure contract that will follow the completion of this project.

The assumption of the design responsibility and the added foundation work will result in consuming most of the Contractor's planned storage areas within the project limits. This change order will provide for the Contractor to lease a parcel of land adjacent to the project site that will allow them to store materials without adversely affecting their work.

The parcel shall provide approximately 2 acres of storage area and is anticipated to be leased through the Spring of 2010. The quoted monthly lease price has been determined to be in line with typical leased properties in the area.

The work shall be performed as extra work at force account for an estimated cost of $400,000.00 and shall be financed from the contract's contingency funds. A cost analysis is on file.

No adjustment of contract time is warranted as the work will not affect the controlling operation.

This change was concurred with by Alec Melkonians - Asst. Project Manager and Hong Wong - Project Engineer.

Maintenance concurrence is not required as this change order will not affect any permanent roadway features.

ADA Notice: For individuals with sensory disabilities, this document is available in alternate formats. For information call: (916) 654-6410 or TDD (916) 654-3880 or write Records and Forms Management, 1120 N Street, MS-89, Sacramento, CA 95814.

CONCURRED BY:			
Construction Engineer:		Date	
Bridge Engineer:		Date	
Project Engineer:	Hong Wong, PE	Date	9/15/09
Project Manager:	Alec Melkonians	Date	9/15/09
FHWA Rep.:		Date	
Environmental:		Date	
Other (specify):		Date	
Other (specify):		Date	
District Prior Approval By:		Date	
HQ (Issue Approve) By:	Bob Molera, HQ CCO Engineer	Date	9/17/09
Resident Engineer's Signature:		Date	9-15-09

ESTIMATE OF COST

	THIS REQUEST	TOTAL TO DATE
ITEMS	$0.00	$0.00
FORCE ACCOUNT	$400,000.00	$400,000.00
AGREED PRICE	$0.00	$0.00
ADJUSTMENT	$0.00	$0.00
TOTAL	$400,000.00	$400,000.00

FEDERAL PARTICIPATION

☐ PARTICIPATING ☐ PARTICIPATING IN PART ☑ NONE
☐ NON-PARTICIPATING (MAINTENANCE) ☐ NON-PARTICIPATING

FEDERAL SEGREGATION (if more than one Funding Source or P.I.P. type)
☐ CCO FUNDED PER CONTRACT ☐ CCO FUNDED AS FOLLOWS

FEDERAL FUNDING SOURCE	PERCENT

ADA Notice: For individuals with sensory disabilities, this document is available in alternate formats. For information call: (916) 654-6410 or TDD (916) 654-3880 or write Records and Forms Management, 1120 N Street, MS-89, Sacramento, CA 95814.

STATE OF CALIFORNIA - DEPARTMENT OF TRANSPORTATION

CONTRACT CHANGE ORDER

Change Requested by: Engineer

CCO: 224	Suppl. No. 1	Contract No. 04 - 0120R4	Road SF-80-12.6/13.2	FED. AID LOC.:

To: CC MYERS INC

You are directed to make the following changes from the plans and specifications or do the following described work not included in the plans and specifications for this contract. ***NOTE: This change order is not effective until approved by the Engineer.***

Description of work to be done, estimate of quantities and prices to be paid. (Segregate between additional work at contract price, agreed price and force account.) Unless otherwise stated, rates for rental of equipment cover only such time as equipment is actually used and no allowance will be made for idle time. This last percentage shown is the net accumulated increase or decrease from the original quantity in the Engineer's Estimate.

Extra Work at Force Account:

Provide additional funds for the work specified under the original Change Order No. 224 as determined by the Engineer.

Estimated cost of Extra Work at Force Account $300,000.00

Estimated Cost: Increase ☑ Decrease ☐ **$300,000.00**

By reason of this order the time of completion will be adjusted as follows: 0 days

Signature Jeannette J Balderramos	**Resident Engineer** JEANNIE BALDERRAMOS	**Date** 9-27-10
Signature Deanna Vilcheck	**Area Construction Manager** DEANNA VILCHECK	**Date** 9/28/10
Signature Deanna Vilcheck	**Area Construction Manager** DEANNA VILCHECK	**Date** 10/7/10

We the undersigned contractor, have given careful consideration to the change proposed and agree, if this proposal is approved, that we will provide all equipment, furnish the materials, except as may otherwise be noted above, and perform all services necessary for the work above specified, and will accept as full payment therefor the prices shown above.

NOTE: If you, the contractor, do not sign acceptance of this order, your attention is directed to the requirements of the specifications as to proceeding with the ordered work and filing a written protest within the time therein specified.

Signature NOT REQUIRED	**(Print name and title)**	**Date**

STATE OF CALIFORNIA - DEPARTMENT OF TRANSPORTATION

CONTRACT CHANGE ORDER

Change Requested by: Engineer

CCO: 225	Suppl. No. 0	Contract No. 04 - 0120R4	Road SF-80-12.6/13.2	FED. AID LOC.: ACBRIM-080-1(097)N

To: CC MYERS INC

You are directed to make the following changes from the plans and specifications or do the following described work not included in the plans and specifications for this contract. ***NOTE: This change order is not effective until approved by the Engineer.***

Description of work to be done, estimate of quantities and prices to be paid. (Segregate between additional work at contract price, agreed price and force account.) Unless otherwise stated, rates for rental of equipment cover only such time as equipment is actually used and no allowance will be made for idle time. This last percentage shown is the net accumulated increase or decrease from the original quantity in the Engineer's Estimate.

Adjustment of Compensation at Force Account:

Compensate the Contractor for the costs concerning the double handling of the fabricated steel from the Temporary Bypass Structure (Bridge No. 34-0006 (TEMP)) East Tie-In steel truss and skid bent structures that is stored off-site due to fabrication delays to both the steel truss and skid bents.

Compensation paid at force account shall include loading the steel at the storage site, transporting the steel from the storage site to the project site and unloading the steel at the project site.

The cost of unloading the steel at the storage site shall not be considered compensable under this change order.

Estimated cost of Adjustment of Compensation at Force Account $500,000.00

RECEIVED
OCT 8 09
011100

Estimated Cost: Increase ☑ Decrease ☐ **$500,000.00**

By reason of this order the time of completion will be adjusted as follows: 0 days

Submitted by

Signature	Resident Engineer	Date
	BILL CASEY	9-11-09

Approval Recommended by

Signature	Area Construction Manager	Date
Deanna Vilcheck	DEANNA VILCHECK	9/14/09

Engineer Approval by

Signature	Area Construction Manager	Date
Deanna Vilcheck	DEANNA VILCHECK	10/7/09

We the undersigned contractor, have given careful consideration to the change proposed and agree, if this proposal is approved, that we will provide all equipment, furnish the materials, except as may otherwise be noted above, and perform all services necessary for the work above specified, and will accept as full payment therefor the prices shown above.

NOTE: If you, the contractor, do not sign acceptance of this order, your attention is directed to the requirements of the specifications as to proceeding with the ordered work and filing a written protest within the time therein specified.

Contractor Acceptance by

Signature	(Print name and title)	Date
	DANIEL E. HIMICK, PRESIDENT	10/02/09

STATE OF CALIFORNIA - DEPARTMENT OF TRANSPORTATION

CONTRACT CHANGE ORDER MEMORANDUM

TO: MIKE FORNER / DEANNA VILCHECK

FROM: BILL CASEY

FILE: E.A. 04 - 0120R4
CO-RTE-PM SF-80-12.6/13.2
FED. NO. ACBRIM-080-1(097)N

CCO#: **225** SUPPLEMENT#: **0** Category Code: **CFXX**

CONTINGENCY BALANCE (incl. this change) **$54,315,400.59**

COST: **$500,000.00** INCREASE ☑ DECREASE ☐

HEADQUARTERS APPROVAL REQUIRED? ☑ YES ☐ NO

SUPPLEMENTAL FUNDS PROVIDED: **$0.00**

IS THIS REQUEST IN ACCORDANCE WITH ENVIRONMENTAL DOCUMENTS? ☑ YES ☐ NO

CCO DESCRIPTION:
ETI Steel Double Handling Cost

PROJECT DESCRIPTION:
CONSTRUCT ROUTE 80 TEMP BYPASS STRUCTURE

Original Contract Time:	Time Adj. This Change:	Previously Approved CCO Time Adjustments:	Percentage Time Adjusted: (including this change)	Total # of Unreconciled Deferred Time CCO(s): (including this change)
475 Day(s)	**0** Day(s)	**0** Day(s)	**0** %	**0**

THIS CHANGE ORDER PROVIDES FOR:
compensation to the contractor for additional steel handling costs incurred due to Department caused delays to the East Tie-In steel fabrication.

This contract was awarded on March 10, 2004 to construct a temporary detour for both eastbound and westbound I-80 traffic that allows for the tie in of the east span of the new San Francisco Oakland Bay Bridge (SFOBB) to Yerba Buena Island. The detour consist of three main structures, the east tie in to the bridge, the west tie in to the island and the viaduct structure between the two tie ins. The contract was awarded as a performance based project with the contractor responsible for meeting the design criteria specified in the contract.

Two separate Department strategy memos, dated December 14, 2006 and December 25, 2006 and both approved by Tony Anziano, Toll Bridge Program Manager, Richard Land, Chief Engineer and subsequently the TBPOC, recommended that the Department assume the design responsibility for the ETI and WTI structures and recommended the advance construction, within this contract, of numerous foundation and columns from the Yerba Buena Island Transition Structure contract that will follow the completion of this project.

This change order concerns additional costs associated with the double handling of fabricated steel to be erected for the East Tie-In (ETI) structure. The East Tie-In consists of a double deck steel truss approximately 20 meters wide and 80 meters long with a weight of approximately 1,270 metric tons and a steel skid bent support system with a weight of approximately 3,000 metric tons.

The fabrication and erection of the ETI truss and skid bent has been provided for under Change Orders No. 116, No. 129 and No. 140. These change orders provided for the delivery and unloading of the fabricated steel to the project site. Due to various Department caused delays to the fabrication of these structures, the contractor shall be forced to store the material at an off site location and then transport the steel to the jobsite as necessary to meet the contracted erection schedule. This change order provides for these additional costs associated with double handling the steel.

Compensation for the additional handling and transportation costs shall be paid as an adjustment of compensation at force account at an estimated cost of $500,000.00 which shall be financed from the contract's contingency funds. A cost estimate is on file.

No adjustment of contract time is warranted as the work will not affect the controlling operation.

This change was concurred with by Alec Melkonians - Asst. Project Manager and Hong Wong - Project Engineer

Maintenance concurrence is not required as this change doesn't affect any permanent roadway features.

ADA Notice: For individuals with sensory disabilities, this document is available in alternate formats. For information call: (916) 654-6410 or TDD (916) 654-3880 or write Records and Forms Management, 1120 N Street, MS-89, Sacramento, CA 95814.

CONCURRED BY:		
Construction Engineer:		Date
Bridge Engineer:	Bill Casey, Resident Engineer	Date 9-11-09
Project Engineer:	HONG WONG	Date 9-15-09
Project Manager:	ALEC MELKONIANS	Date 9-15-09
FHWA Rep.:		Date
Environmental:		Date
Other (specify):		Date
Other (specify):		Date
District Prior Approval By:		Date
HQ (Issue Approve) By:	BOB MOLERA	Date 9/17/09
Resident Engineer's Signature:		Date
		9-11-09

ESTIMATE OF COST

	THIS REQUEST	TOTAL TO DATE
ITEMS	$0.00	$0.00
FORCE ACCOUNT	$0.00	$0.00
AGREED PRICE	$0.00	$0.00
ADJUSTMENT	$500,000.00	$500,000.00
TOTAL	$500,000.00	$500,000.00

FEDERAL PARTICIPATION

☐ PARTICIPATING ☐ PARTICIPATING IN PART ☑ NONE
☐ NON-PARTICIPATING (MAINTENANCE) ☐ NON-PARTICIPATING

FEDERAL SEGREGATION (if more than one Funding Source or P.I.P. type)
☐ CCO FUNDED PER CONTRACT ☐ CCO FUNDED AS FOLLOWS

FEDERAL FUNDING SOURCE	PERCENT

ADA Notice: For individuals with sensory disabilities, this document is available in alternate formats. For information call: (916) 654-6410 or TDD (916) 654-3880 or write Records and Forms Management, 1120 N Street, MS-89, Sacramento, CA 95814.

CONTRACT CHANGE ORDER

Change Requested by: Engineer

CCO: 225	Suppl. No. 1	Contract No. 04 - 0120R4	Road SF-80-12.6/13.2	FED. AID LOC.:

To: **CC MYERS INC**

You are directed to make the following changes from the plans and specifications or do the following described work not included in the plans and specifications for this contract. ***NOTE: This change order is not effective until approved by the Engineer.***

Description of work to be done, estimate of quantities and prices to be paid. (Segregate between additional work at contract price, agreed price and force account.) Unless otherwise stated, rates for rental of equipment cover only such time as equipment is actually used and no allowance will be made for idle time. This last percentage shown is the net accumulated increase or decrease from the original quantity in the Engineer's Estimate.

Adjustment of Compensation at Force Account:

Provide additional funds for the work specified under the original Change Order No. 225.

Cost of Adjustment of Compensation at Force Account $100,000.00

Estimated Cost: Increase ☑ Decrease ☐ **$100,000.00**

By reason of this order the time of completion will be adjusted as follows: 0 days

Submitted by		
Signature Jeannie Balderrama	**Resident Engineer** JEANNIE BALDERRAMOS	**Date** 6/28/10
Approved / Recommended by		
Signature Deanna Vilcheck	**Area Construction Manager** DEANNA VILCHECK	**Date** 6/28/10
Engineer Approved by		
Signature Deanna Vilcheck	**Area Construction Manager** DEANNA VILCHECK	**Date** 7/2/10

We the undersigned contractor, have given careful consideration to the change proposed and agree, if this proposal is approved, that we will provide all equipment, furnish the materials, except as may otherwise be noted above, and perform all services necessary for the work above specified, and will accept as full payment therefor the prices shown above.

NOTE: If you, the contractor, do not sign acceptance of this order, your attention is directed to the requirements of the specifications as to proceeding with the ordered work and filing a written protest within the time therein specified.

Contractor Acceptance by		
Signature N/A	**(Print name and title)**	**Date**

STATE OF CALIFORNIA - DEPARTMENT OF TRANSPORTATION

CONTRACT CHANGE ORDER

Change Requested by: Engineer

CCO 226	Suppl. No. 0	Contract No. 04 - 0120R4	Road SF-80-12.6/13.2	FED. AID LOC.:

To: **CC MYERS INC**

You are directed to make the following changes from the plans and specifications or do the following described work not included in the plans and specifications for this contract. ***NOTE: This change order is not effective until approved by the Engineer.***

Description of work to be done, estimate of quantities and prices to be paid. (Segregate between additional work at contract price, agreed price and force account.) Unless otherwise stated, rates for rental of equipment cover only such time as equipment is actually used and no allowance will be made for idle time. This last percentage shown is the net accumulated increase or decrease from the original quantity in the Engineer's Estimate.

Incorporate into the plan sheets the addition of manhole cover plates for the manhole openings on the portal struts on Span 48 through Span 51 of the steel Viaduct of the Temporary Bypass Structure (Bridge No. 34-0006 (TEMP)) as authorized by the Engineer.

Extra Work at Force Account:

Provide for the design modifications of the Viaduct portal strut manhole openings called for under this change order and furnish all materials, labor and equipment to provide for the installation of the manhole cover plates as required by these design modifications.

Estimated Cost of Extra Work at Force Account $30,000.00

RECEIVED
011674 APR 13 10

Estimated Cost: Increase ☑ Decrease ☐ **$30,000.00**

By reason of this order the time of completion will be adjusted as follows: 0 days

Submitted by

Signature	Resident Engineer	Date
[signature]	BILL CASEY	1-5-09

Approval Recommended by

Signature	Area Construction Manager	Date
Deanna Vilcheck	DEANNA VILCHECK	1/7/10

Engineer Approval by

Signature	Area Construction Manager	Date
Deanna Vilcheck	DEANNA VILCHECK	2/8/10

We the undersigned contractor, have given careful consideration to the change proposed and agree, if this proposal is approved, that we will provide all equipment, furnish the materials, except as may otherwise be noted above, and perform all services necessary for the work above specified, and will accept as full payment therefor the prices shown above.

NOTE: If you, the contractor, do not sign acceptance of this order, your attention is directed to the requirements of the specifications as to proceeding with the ordered work and filing a written protest within the time therein specified.

Contractor Acceptance by

Signature	(Print name and title)	Date
[signature]	STEVE FRANCIS, CHIEF ESTIMATOR	1.26.10

STATE OF CALIFORNIA - DEPARTMENT OF TRANSPORTATION

CONTRACT CHANGE ORDER MEMORANDUM

TO: MIKE FORNER / DEANNA VILCHECK	FILE: **E.A.** 04 - 0120R4
FROM: BILL CASEY	**CO-RTE-PM** SF-80-12.6/13.2
	FED. NO.
CCO#: **226** SUPPLEMENT#: **0** Category Code: **CHPA**	CONTINGENCY BALANCE (incl. this change) **$43,984,346.59**
COST: **$30,000.00** INCREASE ☑ DECREASE ☐	HEADQUARTERS APPROVAL REQUIRED? ☐ YES ☑ NO
SUPPLEMENTAL FUNDS PROVIDED: **$0.00**	IS THIS REQUEST IN ACCORDANCE WITH ENVIRONMENTAL DOCUMENTS? ☑ YES ☐ NO
CCO DESCRIPTION: Viaduct Manhole Cover Plates	**PROJECT DESCRIPTION:** CONSTRUCT ROUTE 80 TEMP BYPASS STRUCTURE

Original Contract Time:	Time Adj. This Change:	Previously Approved CCO Time Adjustments:	Percentage Time Adjusted: (including this change)	Total # of Unreconciled Deferred Time CCO(s): (including this change)
475 Day(s)	**0** Day(s)	**1660** Day(s)	**349** %	**0**

THIS CHANGE ORDER PROVIDES FOR:

modifications to the manhole openings of the portal struts of the of the Viaduct structure.

This contract calls for the construction of a temporary detour for both eastbound and westbound I-80 traffic that allows for the tie in of the east span of the new San Francisco Oakland Bay Bridge (SFOBB) to Yerba Buena Island. The detour consist of three main structures, the east tie-in (ETI) to the bridge, the west tie-in (WTI) to the island and the Viaduct structure between the two. The contract was awarded as a performance based project with the contractor responsible for meeting the design criteria specified in the contract.

In order to satisfy the Department that the safety of the traveling public would be fully addressed, the Office of Structures Design requested several design enhancements to the steel truss. It was also determined in the Department's December 14, 2006 strategy memo that the Viaduct should be designed as a stand alone structure due to the anticipated lag in the completion of the ETI and WTI structures. This memo was approved by Tony Anziano - Toll Bridge Program Manager, Richard Land - Chief Engineer, and subsequently by the Toll Bridge Program Oversight Committee (TBPOC).

The Viaduct consists of 4 spans of a double deck steel truss approximately 20 meters wide and 320 meters long with a weight of over 4,300 metric tons. This change order provides for the addition of manhole cover plates on the manhole openings of the portal struts of the Viaduct in order to eliminate the potential hazard of debris falling onto the travel way from animals that may nest in these openings. These changes have been requested by Project Development.

As the Viaduct remains a performance based structure with the contractor responsible for the design, the contractor shall modify the design by adding cover plates to the manhole openings as requested and as approved by the Engineer. The contractor will then implement the approved design modifications by incorporating them into the existing structure. The approved existing design includes 4 manhole openings in each of the 8 portal struts located on the structure with no requirement to cover these openings.

Compensation for incorporating the design modifications into the contract and furnishing and installing the manhole cover plates shall be paid as extra work at force account at an estimated cost of $30,000.00 which shall be funded by the contract's contingency funds. A cost estimate is on file.

No adjustment of contract time is warranted as the change will not affect the controlling operation.

This change was concurred with by Alec Melkonians - Asst. Project Manager, Minh B. Nguyen - Project Engineer, and Lina Ellis - Maintenance.

ADA Notice: For individuals with sensory disabilities, this document is available in alternate formats. For information call: (916) 654-6410 or TDD (916) 654-3880 or write Records and Forms Management, 1120 N Street, MS-89, Sacramento, CA 95814.

CONCURRED BY:		
Construction Engineer:	Bill Casey, Resident Engineer	Date 1-7-10
Bridge Engineer:		Date
Project Engineer:	Minh B. Nguyen, PE	Date 12-29-09
Project Manager:	Alec Melkonians	Date 12-24-09
FHWA Rep.:		Date
Environmental:		Date
Other (specify):	Lina Ellis, Maintenance	Date 2/4/10
Other (specify):		Date
District Prior Approval By:		Date
HQ (Issue Approve) By:		Date
Resident Engineer's Signature:		Date
		1-7-10

ESTIMATE OF COST

	THIS REQUEST	TOTAL TO DATE
ITEMS	$0.00	$0.00
FORCE ACCOUNT	$30,000.00	$30,000.00
AGREED PRICE	$0.00	$0.00
ADJUSTMENT	$0.00	$0.00
TOTAL	$30,000.00	$30,000.00

FEDERAL PARTICIPATION

☐ PARTICIPATING ☐ PARTICIPATING IN PART ☑ NONE
☐ NON-PARTICIPATING (MAINTENANCE) ☐ NON-PARTICIPATING

FEDERAL SEGREGATION (if more than one Funding Source or P.I.P. type)
☐ CCO FUNDED PER CONTRACT ☐ CCO FUNDED AS FOLLOWS

FEDERAL FUNDING SOURCE PERCENT

ADA Notice: For individuals with sensory disabilities, this document is available in alternate formats. For information call: (916) 654-6410 or TDD (916) 654-3880 or write Records and Forms Management, 1120 N Street, MS-89, Sacramento, CA 95814.

CONTRACT CHANGE ORDER

Change Requested by: Engineer

CCO: 227	Suppl. No. 0	Contract No. 04 - 0120R4	Road SF-80-12.6/13.2	FED. AID LOC.:

To: CC MYERS INC

You are directed to make the following changes from the plans and specifications or do the following described work not included in the plans and specifications for this contract. ***NOTE: This change order is not effective until approved by the Engineer.***

Description of work to be done, estimate of quantities and prices to be paid. (Segregate between additional work at contract price, agreed price and force account.) Unless otherwise stated, rates for rental of equipment cover only such time as equipment is actually used and no allowance will be made for idle time. This last percentage shown is the net accumulated increase or decrease from the original quantity in the Engineer's Estimate.

Extra Work at Force Account:

Perform final grading and implement permanent erosion control measures to the areas backfilled under this change order as determined by the Engineer.

Estimated cost of Extra Work at Force Account $50,000.00

Extra Work at Lump Sum:

Perform the following 2 items of work:

1) Transport, place and compact all excess soil from the Treasure Island storage yard at the corner of Avenue H and 9th St. to The project site. The soil shall be placed as backfill in the areas under the East Tie-In and Viaduct portions of the Temporary Bypass Structure as determined by the Engineer. All soil shall be placed in accordance with Section 19-5 of the Contract Standard Specifiations.

2) Perform the removal of the temporary soil nail wall, placed for the construction of the East Tie-In skid bent foundations, to a minimum of 0.9 meters below the top of the wall and where necessary to construct the electrical duck bank and compressed air line to D Line Sta. 4+85. All concrete removed may be incorporated as backfill into the East Tie-In area.

For these 2 items of work, the Contractor shall be compensated a lump sum of $391,040.00. Except for the items of work specifically excluded below, this sum constitutes full and final compensation, including all markups, for all costs associated with the work of this change.

All work associated with the implementation and maintenance of the Contractor's Storm Water Pollution Prevention Plan shall be paid by the Department separately from this change order.

Flagging costs associated with this work shall be paid under Change Order No. 1 with these costs being paid at 50% by the Department. The remaining flagging costs are considered to be included in the lump sum compensation provided under this change order.

Extra Work at Lump Sum $391,040.00

In the event a portion of the soil from the Treasure Island storage yard at the corner of Avenue H and 9th St. cannot be incorporated back into the project site and needs to be off-hauled, the Contractor shall credit the Department an agreed unit price of $55.00 per cubic meter of soil that is off-hauled. Any credit owed the Department shall be provided for under a supplemental change order. Costs associated with any actual off-haul of soil from the project, if incurred, shall be paid under Change Order No. 155.

CONTRACT CHANGE ORDER

RECEIVED Change Requested by: Engineer

CCO: 227	Suppl. No. 0	Contract No. 04 - 0120R4	Road SF-80-12.6/13.2	FED. AID LOC.:

011839 JUN 23 10

RECEIVED
011839 JUN 23 10

Estimated Cost: Increase ☑ Decrease ☐ $441,040.00

By reason of this order the time of completion will be adjusted as follows: 0 days

Submitted by

Signature	Resident Engineer	Date
	BILL CASEY	3-5-10

Approval Recommended by

Signature	Area Construction Manager	Date
Deanna Vilcheck	DEANNA VILCHECK	3/9/10

Engineer Approval by

Signature	Area Construction Manager	Date
Deanna Vilcheck	DEANNA VILCHECK	4/19/10

We the undersigned contractor, have given careful consideration to the change proposed and agree, if this proposal is approved, that we will provide all equipment, furnish the materials, except as may otherwise be noted above, and perform all services necessary for the work above specified, and will accept as full payment therefor the prices shown above.

NOTE: If you, the contractor, do not sign acceptance of this order, your attention is directed to the requirements of the specifications as to proceeding with the ordered work and filing a written protest within the time therein specified.

Contractor Acceptance by

Signature	(Print name and title)	Date
	DANIEL E. HUMICK, PRESIDENT	4/13/10

STATE OF CALIFORNIA - DEPARTMENT OF TRANSPORTATION

CONTRACT CHANGE ORDER MEMORANDUM

TO: MIKE FORNER / DEANNA VILCHECK	FILE: E.A. 04 - 0120R4
	CO-RTE-PM SF-80-12.6/13.2
FROM: BILL CASEY	FED. NO.
CCO#: 227 SUPPLEMENT#: 0 Category Code: CDPR	CONTINGENCY BALANCE (incl. this change) $40,901,164.59
COST: $441,040.00 INCREASE ☑ DECREASE ☐	HEADQUARTERS APPROVAL REQUIRED? ☑ YES ☐ NO
SUPPLEMENTAL FUNDS PROVIDED: $0.00	IS THIS REQUEST IN ACCORDANCE WITH ENVIRONMENTAL DOCUMENTS? ☑ YES ☐ NO
CCO DESCRIPTION: ETI Backfill & Restoration	**PROJECT DESCRIPTION:** CONSTRUCT ROUTE 80 TEMP BYPASS STRUCTURE

Original Contract Time:	Time Adj. This Change:	Previously Approved CCO Time Adjustments:	Percentage Time Adjusted: (including this change)	Total # of Unreconciled Deferred Time CCO(s): (including this change)
475 Day(s)	0 Day(s)	1660 Day(s)	349 %	0

THIS CHANGE ORDER PROVIDES FOR:
backfill of the East Tie-In area.

This project, the Transitional Bypass Structure (TBS), was awarded in March 2004 to construct a detour that will allow for the tie in of the new east span of the San Francisco Oakland Bay Bridge to Yerba Buena Island. The TBS encompasses three main structures, the East Tie-In (ETI) to the existing bridge, the West Tie-In to Yerba Buena Island and the Viaduct structure between the two tie ins.

The original contract was awarded as a performance based contract with the contractor responsible for the design of the structures based upon meeting specified design criteria. The Department issued a December 14, 2006 memo entitled Strategy for South-South Detour Contract Completion which was approved by Tony Anziano (Toll Bridge Program Manager), Richard Land (Chief Engineer) and subsequently by the TBPOC. This memo recommended that the design of the ETI structure be assumed by the Department as opposed to the as-bid performance based contractor design.

The new design of the ETI structure provided for the mass excavation of the area under the structure to allow for the construction of 20 foundations that where required to support a skid bent system. The contract provided for the excavation and the transport of the soil to a storage site approximately 1 mile from the project site. This change order provides for the stored soil to be transported back to the jobsite and incorporated into the work as backfill of the ETI area.

The work encompassed under this change includes the transport and backfill of approximately 6,750 cubic meters of soil. Additionally, the change order provides for the removal of the top 0.9 meters of a soil nail wall that was constructed to allow for the construction of the ETI skid bent footings. Areas where the wall conflicts with the construction of a planned electrical duct bank will also be removed.

Compensation for the soil backfill and wall removal shall be paid as extra work at an agreed lump sum price of $391,040.00. Compensation for any final grading and erosion control measures shall be paid as extra work at force account at an estimated cost of $50,000.00. The total estimated change order cost of $441,040.00 shall be financed from the contract's contingency funds. A cost analysis is on file.

It is anticipated that all of the stored soil shall be incorporated back into the project site. In the event soil needs to be off-hauled from the project, the contractor shall provide a credit to the Department for backfill work not performed. Any credit, if required, shall be provided under a supplement to this change order.

No adjustment of contract time warranted as the work shall not affect the controlling operation.

This change was concurred with by Ken Terpstra - Project Manager, Jaime Gutierrez - Project Engineer, and Lina Ellis - Maintenance.

ADA Notice: For individuals with sensory disabilities, this document is available in alternate formats. For information call: (916) 654-6410 or TDD (916) 654-3880 or write Records and Forms Management, 1120 N Street, MS-89, Sacramento, CA 95814.

CONCURRED BY:		
Construction Engineer:	Bill Casey, Resident Engineer	Date 3-5-10
Bridge Engineer:		Date
Project Engineer:	~~Minh B. Nguyen, PE~~ JASMINE ANTEEBER	Date 4/9/10
Project Manager:	Ken Terpstra	Date 3/8/10
FHWA Rep.:		Date
Environmental:		Date
Other (specify):	Jeannie Balderramos, SR TE	Date 3-5-10
Other (specify):	Lina Ellis, Maintenance	Date 3/8/10
District Prior Approval By:		Date
HQ (Issue Approve) By:	Larry Salhaney, HQ CCO Engine	Date 3/15/10
Resident Engineer's Signature:		Date
		3-5-10

ESTIMATE OF COST

	THIS REQUEST	TOTAL TO DATE
ITEMS	$0.00	$0.00
FORCE ACCOUNT	$50,000.00	$50,000.00
AGREED PRICE	$391,040.00	$391,040.00
ADJUSTMENT	$0.00	$0.00
TOTAL	$441,040.00	$441,040.00

FEDERAL PARTICIPATION

☐ PARTICIPATING ☐ PARTICIPATING IN PART ☑ NONE
☐ NON-PARTICIPATING (MAINTENANCE) ☐ NON-PARTICIPATING

FEDERAL SEGREGATION (if more than one Funding Source or P.I.P. type)
☐ CCO FUNDED PER CONTRACT ☐ CCO FUNDED AS FOLLOWS

FEDERAL FUNDING SOURCE	PERCENT

ADA Notice: For individuals with sensory disabilities, this document is available in alternate formats. For information call: (916) 654-6410 or TDD (916) 654-3880 or write Records and Forms Management, 1120 N Street, MS-89, Sacramento, CA 95814.

STATE OF CALIFORNIA - DEPARTMENT OF TRANSPORTATION

CONTRACT CHANGE ORDER

Change Requested by: Engineer

CCO: 228	Suppl. No. 0	Contract No. 04 - 0120R4	Road SF-80-12.6/13.2	FED. AID LOC.:

To: CC MYERS INC

You are directed to make the following changes from the plans and specifications or do the following described work not included in the plans and specifications for this contract. ***NOTE: This change order is not effective until approved by the Engineer.***

Description of work to be done, estimate of quantities and prices to be paid. (Segregate between additional work at contract price, agreed price and force account.) Unless otherwise stated, rates for rental of equipment cover only such time as equipment is actually used and no allowance will be made for idle time. This last percentage shown is the net accumulated increase or decrease from the original quantity in the Engineer's Estimate.

Extra Work at Lump Sum:

Furnish and install the call boxes and SCADA system, including all appurtenances, on the upper and lower decks of the Temporary Bypass Structure (Bridge No. 34-0006 (TEMP)) as shown on Sheet No. 2 and 3 of this change order.

For this work, the Contractor shall be compensated an agreed lump sum of $15,980.00. Excluding the cost of providing lane closures, this lump sum constitutes full and final compensation, including all markups, for all costs associated with this work.

Any lane closures required for the work of this change shall be provided under Change Order No. 240. These costs are excluded from this change order.

Cost of Extra Work at Lump Sum $15,980.00

Estimated Cost: Increase ☑ Decrease ☐ **$15,980.00**

By reason of this order the time of completion will be adjusted as follows: 0 days

Submitted by		
Signature Jeannie Balderramos	Resident Engineer JEANNIE BALDERRAMOS	Date 5-4-10
Approval Recommended by		
Signature Jeannie Balderramos	Construction Engineer JEANNIE BALDERRAMOS	Date 5-4-10
Engineer Approval by		
Signature Jeannie Balderramos	Construction Engineer JEANNIE BALDERRAMOS	Date 5-19-10

We the undersigned contractor, have given careful consideration to the change proposed and agree, if this proposal is approved, that we will provide all equipment, furnish the materials, except as may otherwise be noted above, and perform all services necessary for the work above specified, and will accept as full payment therefor the prices shown above.

NOTE: If you, the contractor, do not sign acceptance of this order, your attention is directed to the requirements of the specifications as to proceeding with the ordered work and filing a written protest within the time therein specified.

Contractor Acceptance by		
Signature [signature]	(Print name and title), STEVE FRANCIS, CHIEF ESTIMATOR	Date 5.18.10

SCADA CONNECTIONS FROM RTU 8 TO
CB 139, 239, 339, 439;
CB 140, 240, 340, 440

□ = 12X12X6 4X55 30X

REGISTERED PROFESSIONAL ENGINEER
Nicholas N Chreng
No. E 17075
Exp. 9/30/11
ELECTRICAL
STATE OF CALIFORNIA

Nicholas N Chreng
4/8/10

CONTRACT NO. 04-0120R4
CONTRACT CHANGE ORDER NO. 228
SHEET 2 OF 3

Caltrans Metric

MARK	DATE	DESCRIPTIONS / REVISIONS	BY	CH'D	CCO#

CONTRACT CHANGE ORDER NO. _____
SHEET ____ OF ____

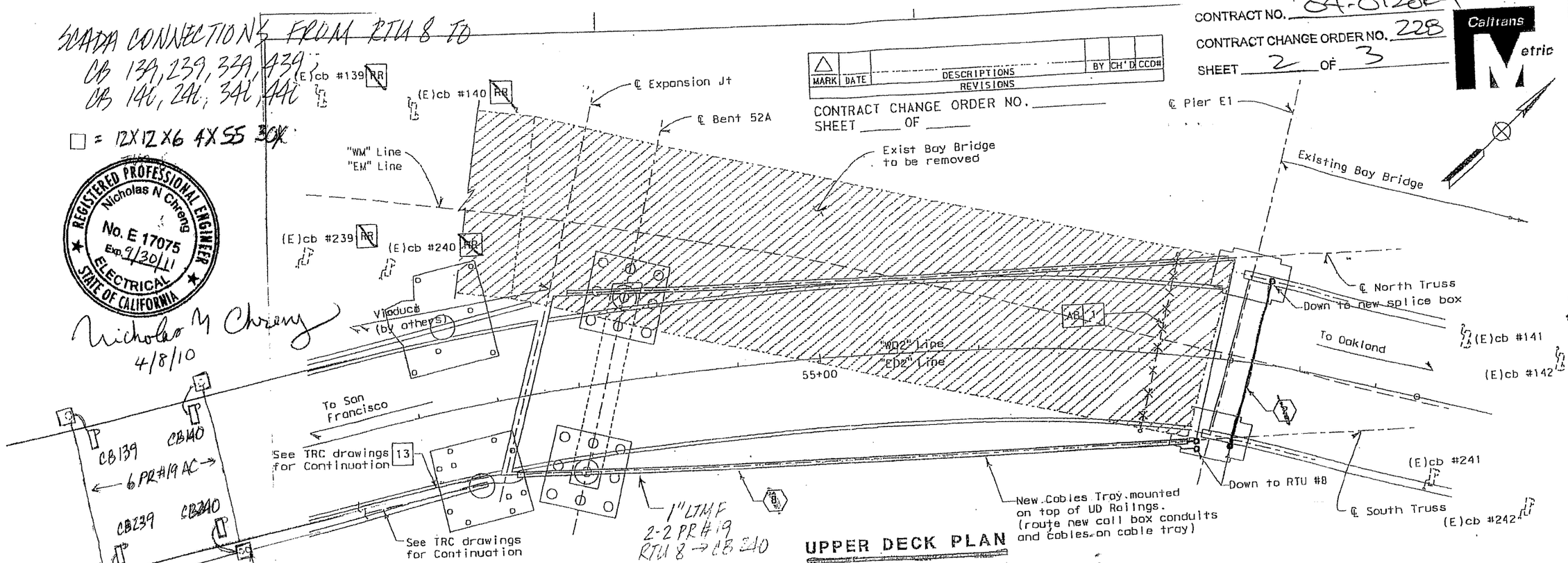

UPPER DECK PLAN
1:250

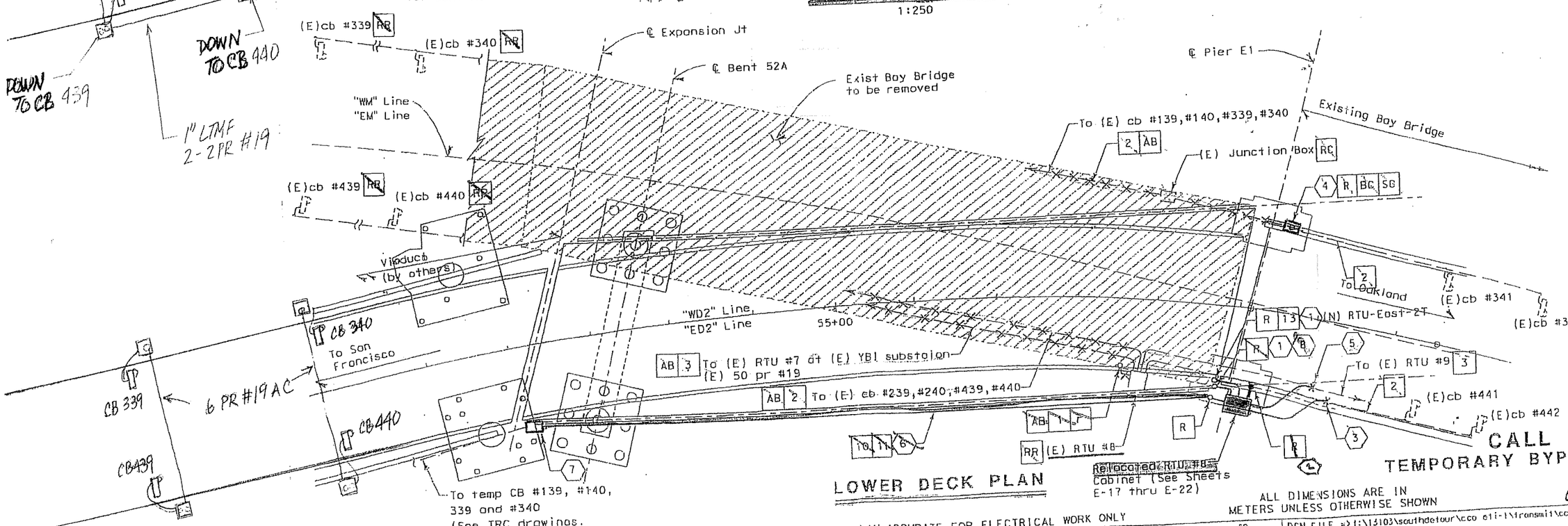

LOWER DECK PLAN

SHEET NOTES:

1. Transition to cabl of upper deck stru
2. Install new 53C wi 4-6 #16 conductor conduit on floor b with conduit strop or beam clamps.
3. Locate and interce 53c with 3 #8 (480 conductor cables (#442). Extend (E) conductors to new location and conne
4. Locate and interce conduit from cb #1 and #342 and exten location. Install box, 508(L) x 508(splice box on top railing.
5. Locate and interce cable (RTU-East) f Extend (E) armored location and conne
6. Install new 53C, conductor cables f boxes #339, #340, Route conduit on f railing. Provide 1.5 meters interv
7. Install new Nemo 508(L) x 508(W) x Splice box to the Provide 600V Term Call boxes termin
8. Install new 53C, conductor cable f #140, #239 and #2 on new cable tray

NOTES:

1. Reference:
-for new cabl see E-9.
-for New relo location, se

CALL BOX INSTALL
TEMPORARY BYPASS STRUCTURE
SCALE: 1:250

E-3

ALL DIMENSIONS ARE IN METERS UNLESS OTHERWISE SHOWN

ACCURATE FOR ELECTRICAL WORK ONLY

DGN FILE =>I:\13103\southdetour\cco eli-1\transmit\cco submittal 20080502\roadway\4120r4u
CU 04251

1"=50'
X1.0482

SCADA CONNECTION FROM RTU 7 @ 4B1 TO CB 238, 338, 438, 138

REGISTERED PROFESSIONAL ENGINEER
Nicholas N Cheng
No. E 17075
Exp. 9/30/11
ELECTRICAL
STATE OF CALIFORNIA

Nicholas N Cheng
4/8/10

Caltrans Metric

CONTRACT NO. 04-0120R4
CONTRACT CHANGE ORDER NO. 228
SHEET 2 OF 3

Caltrans now has a web site! To get to the web site, go to http://www.dot.ca.gov

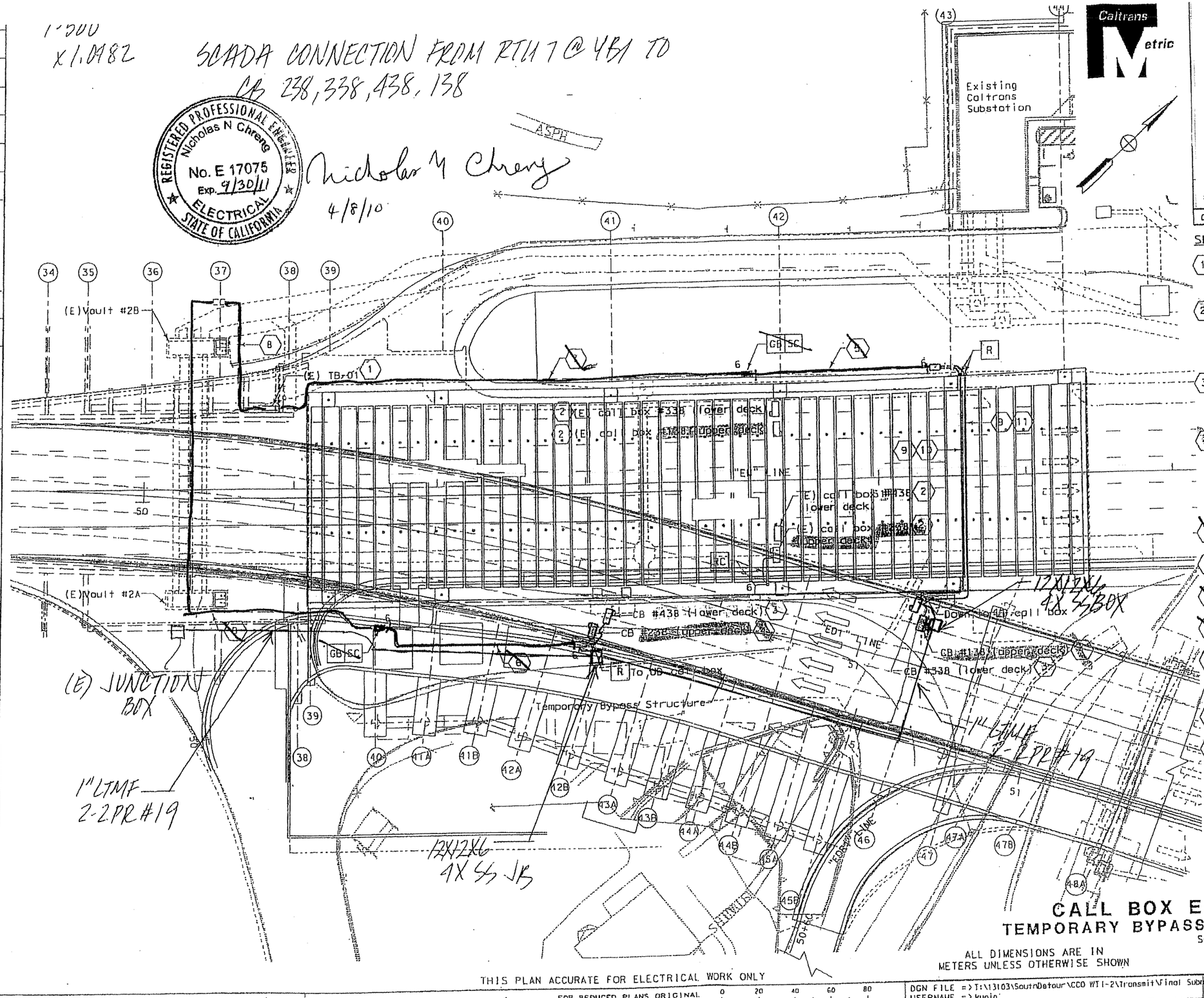

SHEET NOTES:

1. Existing Terminal Box TB-01 is located on the north retaining wall near Bent #38.
2. Remove existing call box and keeping 9-pin straight plug connection intact with one (1) meter length of cable pigtail gfor splicing at temporary location.
3. Temporary install relocated call box on LD temporary concrete barrier at this location. Secure call box on top of barrier.
4. Temporary install relocated call box on UD temporary concrete barrier at this location. Secure call box on top of barrier. Provide temporary flexible conduit with 3 #8, 1-6 #16 conductor cable and route down to lower deck and connect.
5. Install 5~~3~~C, 3 #8, 2~~-~~6 #16 conductor cable for CB #138 and CB #338.
6. Install 5~~3~~C, 3 #8, 2~~-~~6 #16 conductor cable for CB #238 and CB #438.
7. Existing 5~~3~~c, 3 #8, 2~~-~~6 #16 conductor cable for CB #138 and CB #338.
8. Existing 5~~3~~c, 3 #8, 2~~-~~6 #16 conductor cable for CB #238 and CB #438.
9. Route conduit below Upper Deck floor beam. Secure conduit with conduit clamps and channel strut. See detail on E-18.
10. Install 41C, 3 #8, 1-6 #16 conductor cable for CB #138.
11. Install 41C, 3 #8, 1-6 #16 conductor cable for CB #338.

CALL BOX ELECTRICAL WORK
TEMPORARY BYPASS STRUCTURE-WEST TIE IN

SCALE: 1:250

ALL DIMENSIONS ARE IN METERS UNLESS OTHERWISE SHOWN

E-24

THIS PLAN ACCURATE FOR ELECTRICAL WORK ONLY

FOR REDUCED PLANS ORIGINAL SCALE IS IN MILLIMETERS 0 20 40 60 80

DGN FILE => T:\13103\SouthDetour\CCO WTI-2\Transmit\Final Submittal 20080303\4120R3UA024.dgn
USERNAME => kuojo

CU 04251 EA 0120R3

LAST REVISION 00-00-00 DATE PLOTTED => 3/6/2008 TIME PLOTTED => 11:07:09 AM

CALCULATED/ DESIGNED BY		DATE	REVISED BY	DATE REVISED
CHECKED BY	CL	BJ		

STATE OF CALIFORNIA - DEPARTMENT OF TRANSPORTATION
Caltrans
DESIGN OVERSIGHT

1:500
X1.0482

SCADA CONNECTION FROM RTU 7 @ YB1 TO CB 238, 338, 438, 138

REGISTERED PROFESSIONAL ENGINEER
Nicholas N Chreng
No. E 17075
Exp. 9/30/11
ELECTRICAL
STATE OF CALIFORNIA

Nicholas N Chreng
4/8/10

Caltrans Metric

CONTRACT NO. 04-0120R4
CONTRACT CHANGE ORDER NO. 228
SHEET 3 OF 3

Caltrans now has a web site! To get to the web site, go to http://www.dot.ca.gov

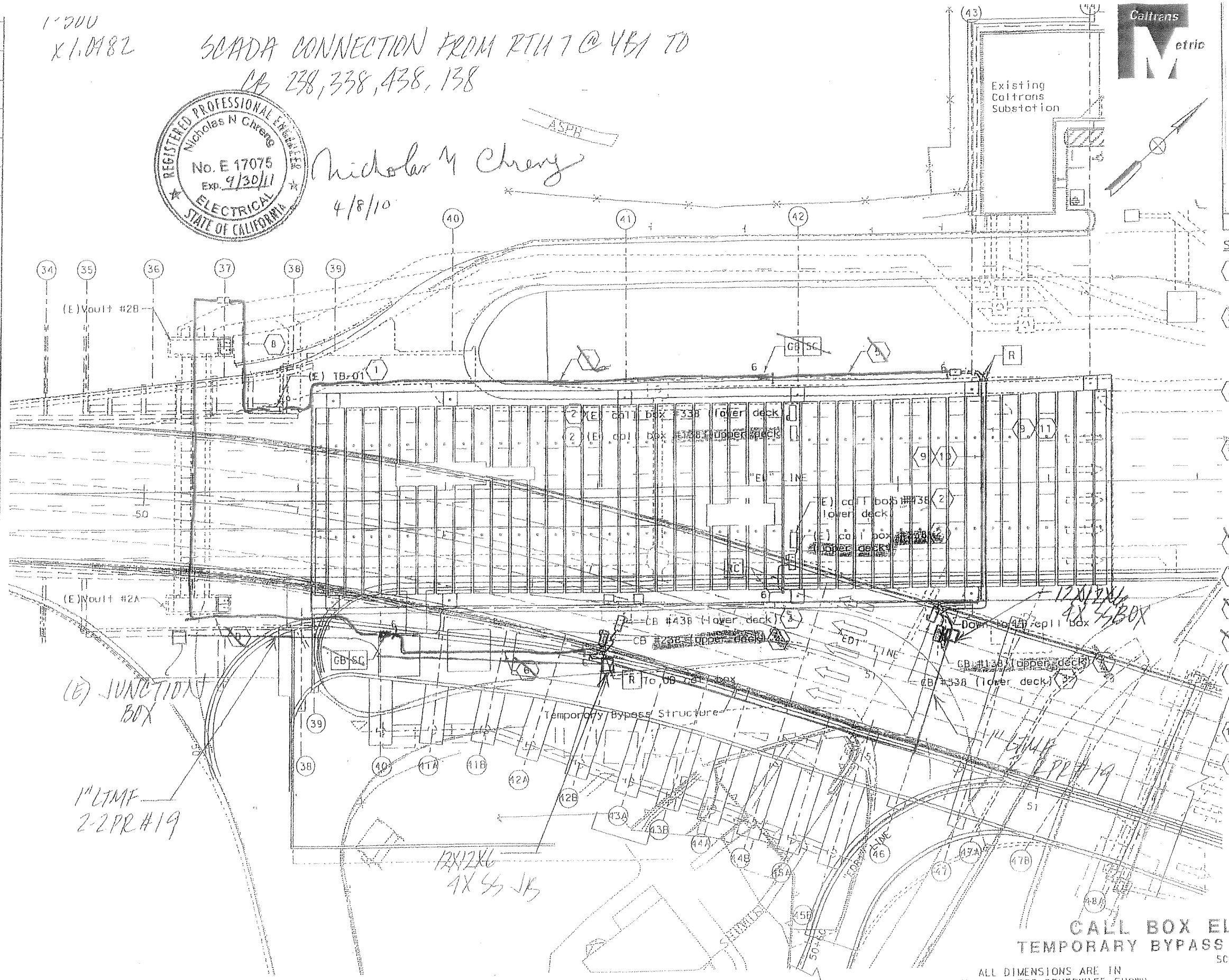

SHEET NOTES:

1. Existing Terminal Box TB-01 is located on the north retaining wall near Bent #38.
2. Remove existing call box and keeping 9-pin straight plug connection intact with one (1) meter length of cable pigtail gfor splicing at temporary location.
3. Temporary install relocated call box on LD temporary concrete barrier at this location. Secure call box on top of barrier.
4. Temporary install relocated call box on UD temporary concrete barrier at this location. Secure call box on top of barrier. Provide temporary flexible conduit with 3 #8, 1-6 #16 conductor cable and route down to lower deck and connect.
5. Install 53C, 3 #8, 2-6 #16 conductor cable for CB #138 and CB #338.
6. Install 53C, 3 #8, 2-6 #16 conductor cable for CB #238 and CB #438.
7. Existing 53c, 3 #8, 2-6 #16 conductor cable for CB #138 and CB #338.
8. Existing 53c, 3 #8, 2-6 #16 conductor cable for CB #238 and CB #438.
9. Route conduit below Upper Deck floor beam. Secure conduit with conduit clamps and channel strut. See detail on E-18.
10. Install 41C, 3 #8, 1-6 #16 conductor cable for CB #138.
11. Install 41C, 3 #8, 1-6 #16 conductor cable for CB #338.

CALL BOX ELECTRICAL WORK
TEMPORARY BYPASS STRUCTURE-WEST TIE IN

SCALE: 1:250

ALL DIMENSIONS ARE IN METERS UNLESS OTHERWISE SHOWN

E-24

THIS PLAN ACCURATE FOR ELECTRICAL WORK ONLY

FOR REDUCED PLANS ORIGINAL SCALE IS IN MILLIMETERS 0 20 40 60 80

DGN FILE => T:\13103\SouthDetour\CCO WTI-2\Transmit\Final Submittal 20080303\4120R3UA024.dgn
USERNAME => kuojo

CU 04251 | EA 0120R3

LAST REVISION 00-00-00 | DATE PLOTTED => 3/6/2008 TIME PLOTTED => 11:07:09 AM

STATE OF CALIFORNIA - DEPARTMENT OF TRANSPORTATION
Caltrans

DESIGN OVERSIGHT

CALCULATED/DESIGNED BY BJ | DATE | REVISED BY
CHECKED BY CL | DATE REVISED

STATE OF CALIFORNIA - DEPARTMENT OF TRANSPORTATION

CONTRACT CHANGE ORDER MEMORANDUM

TO: MIKE FORNER / DEANNA VILCHECK	FILE: E.A. 04 - 0120R4 CO-RTE-PM SF-80-12.6/13.2 FED. NO.
FROM: JEANNIE BALDERRAMOS	
CCO#: 228 SUPPLEMENT#: 0 Category Code: CBPC	CONTINGENCY BALANCE (incl. this change) $35,641,264.59
COST: $15,980.00 INCREASE ☑ DECREASE ☐	HEADQUARTERS APPROVAL REQUIRED? ☐ YES ☑ NO
SUPPLEMENTAL FUNDS PROVIDED: $0.00	IS THIS REQUEST IN ACCORDANCE WITH ENVIRONMENTAL DOCUMENTS? ☑ YES ☐ NO
CCO DESCRIPTION: Install call boxes and SCADA system	PROJECT DESCRIPTION: CONSTRUCT ROUTE 80 TEMP BYPASS STRUCTURE

Original Contract Time:	Time Adj. This Change:	Previously Approved CCO Time Adjustments:	Percentage Time Adjusted: (including this change)	Total # of Unreconciled Deferred Time CCO(s): (including this change)
475 Day(s)	0 Day(s)	1660 Day(s)	349 %	7

THIS CHANGE ORDER PROVIDES FOR:

Furnishing and installing call boxes and SCADA system components on the upper and lower decks of the San Francisco Oakland Bay Bridge (SFOBB).

This project provides for the construction of a detour of the mainline eastbound and westbound I-80 traffic that will allow for the tie in of the new east span of the San Francisco Oakland Bay Bridge to Yerba Buena Island. The detour, which spans approximately 650 meters, is comprised of a double deck steel truss bridge which transitions to a concrete and roadway structure as it approaches the Yerba Buena Island tunnel.

A separate contract (EA 04-010904) is concurrently installing new call boxes and components of a SCADA system on the SFOBB. Those contract plans mistakenly call for new call boxes and components to be installed on the portion of the bridge that is being replaced by the detour under this contract. This change order provides revised plan sheets that install these components on the new detour structure. In order to avoid construction conflicts between this work and the on-going work being performed on this contract, Project Development has requested that this work be removed from the existing contract (EA 04-010904) and placed into this contract. This change order provides for this added work. Similarly, a credit for the deleted work shall be taken under the other contract.

Compensation for this work shall paid as extra work at an agreed lump sum of $15,980.00 which shall be financed from the contract's contingency funds. A cost analysis is on file.

Lane closures for the work of this change shall be compensated separately from this change order under previously approved Change Order No. 240.

No adjustment of contract time is warranted as the work will not affect the controlling operation.

This change was concurred with by Ken Terpstra - Project Manager, Jaime Gutierrez - Project Engineer, and Lina Ellis - Maintenance.

ADA Notice: For individuals with sensory disabilities, this document is available in alternate formats. For information call: (916) 654-6410 or TDD (916) 654-3880 or write

CONCURRED BY:		
Construction Engineer:	Jeannie Balderramos, RE	Date 5/19/10
Bridge Engineer:	Bill Casey, Bridge Engineer	Date 5/19/10
Project Engineer:	Jaime Gutierrez, PE	Date 5/19/10
Project Manager:	Ken Terpstra, PM	Date 5/19/10
FHWA Rep.:		Date
Environmental:		Date
Other (specify):	Lina Ellis, Maintenance	Date 5/19/10
Other (specify):	Mohan Ayadurai, Struct. Rep.	Date 4/4/10
District Prior Approval By:		Date
HQ (Issue Approve) By.		Date
Resident Engineer's Signature:	Jeannie Balderramos	Date 5-19-10

ESTIMATE OF COST		
	THIS REQUEST	TOTAL TO DATE
ITEMS	$0.00	$0.00
FORCE ACCOUNT	$0.00	$0.00
AGREED PRICE	$15,980.00	$15,980.00
ADJUSTMENT	$0.00	$0.00
TOTAL	$15,980.00	$15,980.00

FEDERAL PARTICIPATION

☐ PARTICIPATING ☐ PARTICIPATING IN PART ☑ NONE
☐ NON-PARTICIPATING (MAINTENANCE) ☐ NON-PARTICIPATING

FEDERAL SEGREGATION (if more than one Funding Source or P.I.P. type)
☐ CCO FUNDED PER CONTRACT ☐ CCO FUNDED AS FOLLOWS

FEDERAL FUNDING SOURCE	PERCENT

ADA Notice: For individuals with sensory disabilities, this document is available in alternate formats. For information call: (916) 654-6410 or TDD (916) 654-3880 or write

STATE OF CALIFORNIA - DEPARTMENT OF TRANSPORTATION

CONTRACT CHANGE ORDER

Change Requested by: Engineer

CCO 229	Suppl. No. 0	Contract No. 04 - 0120R4	Road SF-80-12.6/13.2	FED. AID LOC.:

To: CC MYERS INC

You are directed to make the following changes from the plans and specifications or do the following described work not included in the plans and specifications for this contract. ***NOTE: This change order is not effective until approved by the Engineer.***

Description of work to be done, estimate of quantities and prices to be paid. (Segregate between additional work at contract price, agreed price and force account.) Unless otherwise stated, rates for rental of equipment cover only such time as equipment is actually used and no allowance will be made for idle time. This last percentage shown is the net accumulated increase or decrease from the original quantity in the Engineer's Estimate.

Extra Work at Force Account:

In accordance with Section 10-1.38, "Existing Highway Facilities" of the contract Special Provisions, provide for the salvage of maintenance traveler motors, trolleys and appurtenances during the removal of Spans YB1, YB2, YB3 and YB4 of Bridge No. 34-0025 as authorized by the Engineer.

Estimated Cost of Extra Work at Force Account $100,000.00

RECEIVED
OCT 6 2009
10

Estimated Cost: **Increase** ☑ **Decrease** ☐ **$100,000.00**

By reason of this order the time of completion will be adjusted as follows: 0 days

Submitted by		
Signature	**Resident Engineer** BILL CASEY	**Date** 10-3-09
Approval Recommended by		
Signature Deanna Vilcheck	**Area Construction Manager** DEANNA VILCHECK	**Date** 10/7/09
Engineer Approval by		
Signature Deanna Vilcheck	**Area Construction Manager** DEANNA VILCHECK	**Date** 10/14/09

We the undersigned contractor, have given careful consideration to the change proposed and agree, if this proposal is approved, that we will provide all equipment, furnish the materials, except as may otherwise be noted above, and perform all services necessary for the work above specified, and will accept as full payment therefor the prices shown above.

NOTE: If you, the contractor, do not sign acceptance of this order, your attention is directed to the requirements of the specifications as to proceeding with the ordered work and filing a written protest within the time therein specified.

Contractor Acceptance by		
Signature	**(Print name and title)** STEVE FRANCIS, CHIEF ESTIMATOR	**Date** 11.24.09

STATE OF CALIFORNIA - DEPARTMENT OF TRANSPORTATION

CONTRACT CHANGE ORDER MEMORANDUM

DATE: 9/30/2009 Page 1 of 1

TO: MIKE FORNER / DEANNA VILCHECK	FILE: E.A. 04 - 0120R4
	CO-RTE-PM SF-80-12.6/13.2
FROM: BILL CASEY	FED. NO.
CCO#: 229 SUPPLEMENT#: 0 Category Code: AXZZ	CONTINGENCY BALANCE (incl. this change) $48,631,483.59
COST: $100,000.00 INCREASE ☑ DECREASE ☐	HEADQUARTERS APPROVAL REQUIRED? ☐ YES ☑ NO
SUPPLEMENTAL FUNDS PROVIDED: $0.00	IS THIS REQUEST IN ACCORDANCE WITH ENVIRONMENTAL DOCUMENTS? ☑ YES ☐ NO
CCO DESCRIPTION: Maintenance Traveler Salvage	**PROJECT DESCRIPTION:** CONSTRUCT ROUTE 80 TEMP BYPASS STRUCTURE

Original Contract Time:	Time Adj. This Change:	Previously Approved CCO Time Adjustments:	Percentage Time Adjusted: (including this change)	Total # of Unreconciled Deferred Time CCO(s): (including this change)
475 Day(s)	0 Day(s)	1195 Day(s)	252 %	7

THIS CHANGE ORDER PROVIDES FOR:

The salvage of maintenance traveler motors and trolleys during the removal of the existing bridge.

This project, the Yerba Buena Island Detour (YBID), calls for the construction of a temporary detour for both eastbound and westbound I-80 traffic that will allow for the tie in of the new east span of the San Francisco Oakland Bay Bridge to Yerba Buena Island. The YBID encompasses three main structures, the East Tie-In to the existing bridge, the West Tie-In (WTI) to Yerba Buena Island, and the Viaduct structure between the two tie ins. The contract also calls for the bridge removal of 330 meters of the existing SFOBB after traffic is placed on the new detour and the existing bridge is abandoned.

This change order provides for the salvage of existing maintenance traveler motors and trolleys during the removal of the abandoned bridge and delivery of these salvaged items to the Department SFOBB maintenance yard. This work was specified under Section 10-1.38, "Existing Highway Facilities" of the contract Special Provisions to be performed as extra work.

Compensation for the cost of the salvage and delivery of the motors and trolleys shall be paid as an extra work at force account at an estimated cost of $100,000.00 which shall be financed from the contract's contingency funds. A cost estimate is on file.

No adjustment of contract time is warranted as the work will not affect the controlling operation.

This change was concurred with by Alec Melkonians - Asst. Project Manager and Hong Wong - Project Engineer.

Maintenance concurrence is not required as this change doesn't affect any permanent roadway features.

CONCURRED BY:		
Construction Engineer:	Bill Casey, Resident Engineer	Date 10-3-09
Bridge Engineer:		Date
Project Engineer:	Hong Wong, PE	Date 10-1-09
Project Manager:	Alec Melkonians	Date 10-1-09
FHWA Rep.:		Date
Environmental:		Date
Other (specify):		Date
Other (specify):		Date
District Prior Approval By:		Date
HQ (Issue Approve) By:		Date
Resident Engineer's Signature:		Date 10-3-09

ESTIMATE OF COST	THIS REQUEST	TOTAL TO DATE
ITEMS	$0.00	$0.00
FORCE ACCOUNT	$100,000.00	$100,000.00
AGREED PRICE	$0.00	$0.00
ADJUSTMENT	$0.00	$0.00
TOTAL	$100,000.00	$100,000.00

FEDERAL PARTICIPATION

☐ PARTICIPATING ☐ PARTICIPATING IN PART ☑ NONE
☐ NON-PARTICIPATING (MAINTENANCE) ☐ NON-PARTICIPATING

FEDERAL SEGREGATION (if more than one Funding Source or P.I.P. type)
☐ CCO FUNDED PER CONTRACT ☐ CCO FUNDED AS FOLLOWS

FEDERAL FUNDING SOURCE	PERCENT

ADA Notice: For individuals with sensory disabilities, this document is available in alternate formats. For information call: (916) 654-6410 or TDD (916) 654-3880 or write Records and Forms Management, 1120 N Street, MS-89, Sacramento, CA 95814.

CONTRACT CHANGE ORDER

Change Requested by: Engineer

CCO 230	Suppl. No. 0	Contract No. 04 - 0120R4	Road SF-80-12.6/13.2	FED. AID LOC.:

To: **CC MYERS INC**

You are directed to make the following changes from the plans and specifications or do the following described work not included in the plans and specifications for this contract. ***NOTE: This change order is not effective until approved by the Engineer.***

Description of work to be done, estimate of quantities and prices to be paid. (Segregate between additional work at contract price, agreed price and force account.) Unless otherwise stated, rates for rental of equipment cover only such time as equipment is actually used and no allowance will be made for idle time. This last percentage shown is the net accumulated increase or decrease from the original quantity in the Engineer's Estimate.

Extra Work at Force Account:

Provide temporary shuttle van service in order to mitigate disruptions to the San Francisco Municipal Transportation Agency bus service to Treasure Island and Yerba Buena Island due to the temporary closure of the Yerba Buena Island westbound on ramp to I-80. Shuttle service shall conform to Section 10-1.135 "Temporary Shuttle Van Service" of the contract Special Provisions and as authorized by the Engineer.

Estimated Cost of Extra Work at Force Account $600,000.00

Estimated Cost: **Increase** ☑ **Decrease** ☐ **$600,000.00**

By reason of this order the time of completion will be adjusted as follows: 0 days

Submitted by

Signature	Resident Engineer	Date
	BILL CASEY	10-20-09

Approval Recommended by

Signature	Area Construction Manager	Date
Deanna Vilcheck	DEANNA VILCHECK	10/26/09

Engineer Approval by

Signature	Area Construction Manager	Date
Deanna Vilcheck	DEANNA VILCHECK	11/17/09

We the undersigned contractor, have given careful consideration to the change proposed and agree, if this proposal is approved, that we will provide all equipment, furnish the materials, except as may otherwise be noted above, and perform all services necessary for the work above specified, and will accept as full payment therefor the prices shown above.

NOTE: **If you, the contractor, do not sign acceptance of this order, your attention is directed to the requirements of the specifications as to proceeding with the ordered work and filing a written protest within the time therein specified.**

Contractor Acceptance by

Signature	(Print name and title)	Date
	DANIEL E. HUNCK, PRESIDENT	11/6/09

STATE OF CALIFORNIA - DEPARTMENT OF TRANSPORTATION

CONTRACT CHANGE ORDER MEMORANDUM

TO: MIKE FORNER / DEANNA VILCHECK	FILE: E.A. 04 - 0120R4
FROM: BILL CASEY	CO-RTE-PM SF-80-12.6/13.2
	FED. NO.
CCO#: 230 SUPPLEMENT#: 0 Category Code: CXAX	CONTINGENCY BALANCE (incl. this change) $47,678,166.59
COST: $600,000.00 INCREASE ☑ DECREASE ☐	HEADQUARTERS APPROVAL REQUIRED? ☑ YES ☐ NO
SUPPLEMENTAL FUNDS PROVIDED: $0.00	IS THIS REQUEST IN ACCORDANCE WITH ENVIRONMENTAL DOCUMENTS? ☑ YES ☐ NO
CCO DESCRIPTION: MUNI Shuttle for WB On Ramp Closure	**PROJECT DESCRIPTION:** CONSTRUCT ROUTE 80 TEMP BYPASS STRUCTURE

Original Contract Time:	Time Adj. This Change:	Previously Approved CCO Time Adjustments:	Percentage Time Adjusted: (including this change)	Total # of Unreconciled Deferred Time CCO(s): (including this change)
475 Day(s)	0 Day(s)	1660 Day(s)	349 %	7

THIS CHANGE ORDER PROVIDES FOR:

Shuttle service to mitigate disruptions to bus service due to the temporary closure of the Yerba Buena Island (YBI) westbound on ramp.

This project, the Yerba Buena Island Detour (YBID), calls for the construction of a temporary detour for both eastbound and westbound I-80 traffic that will allow for the tie in of the new east span of the San Francisco Oakland Bay Bridge to Yerba Buena Island. The YBID encompasses three main structures, the East Tie-In to the existing bridge, the West Tie-In (WTI) to Yerba Buena Island, and the Viaduct structure between the two tie ins.

Two separate Department strategy memorandums, dated December 14, 2006 and December 25, 2006, approved by Tony Anziano - Toll Bridge Program Manager and Richard Land - Chief Engineer, recommended that the Department assume responsibility for the designs of the East Tie-In (ETI) and West Tie-In (WTI) portions of this contract, and incorporated seismic retrofit work of the permanent Yerba Buena Island Transition Structure (YBITS) onto this project.

Toll Bridge Program Management has made the determination to provide for the temporary closure of the existing YBI on ramp to westbound I-80. This closure will allow for the demolition of the abandoned concrete viaduct of the east span of the San Francisco Oakland Bay Bridge where it ties into the island. It was determined that the limited access to the structure being demolished and the close proximity of the structure to the YBI on ramp presented potential safety concerns. Upon the completion of the demolition, the on ramp will be reopened to public traffic.

The closure of the on ramp has a detrimental effect on the MUNI bus service provided to both YBI and Treasure Island by the San Francisco Municipal Transportation Agency (SFMTA). Without mitigating these effects, the buses would be forced to detour to the on ramp on the opposite side of the island which would severely impact service. It has been agreed with the SFMTA and the Treasure Island Development Authority that the Department will mitigate this disruption by providing private shuttle service to the community located near the closed on ramp therefore eliminating the buses needed to retrace its route to the opposite side of the island.

Similar shuttle service was provided for under Section 10-1.135 "Temporary Shuttle Van Service" of the contract Special Provisions pertaining to the temporary closure of Southgate Road and the eastbound I-80 off ramp. This closure of the westbound I-80 on ramp was not anticipated under the original contract.

The contractor shall provide for this private shuttle service on a force account basis. It is anticipated that the service will be required for approximately 10 to 12 months. No other costs are anticipated due to the closure of the on ramp at this time.

Compensation for the cost of providing the shuttle service shall be paid as an extra work at force account for an estimated cost of $600,000.00 which shall be financed from the contract's contingency funds. A cost estimate is on file.

No adjustment of contract time is warranted as the work will not affect the controlling operation.

This change was concurred with by Alec Melkonians - Asst. Project Manager and Minh B. Nguyen - Project Engineer.

Maintenance concurrence is not required as this change doesn't affect any permanent roadway features.

ADA Notice: For individuals with sensory disabilities, this document is available in alternate formats. For information call: (916) 654-6410 or TDD (916) 654-3880 or write Records and Forms Management, 1120 N Street, MS 89, Sacramento, CA 95814

CONCURRED BY:		
Construction Engineer:	Jeannie Balderramos	Date 10-25-09
Bridge Engineer:		Date
Project Engineer:	Minh B. Nguyen, PE	Date 10-28-09
Project Manager:	Alec Melkonians	Date 10-20-09
FHWA Rep.:		Date
Environmental:		Date
Other (specify):		Date
Other (specify):		Date
District Prior Approval By:		Date
HQ (Issue Approve) By:	Bob Molera, HQ CCO Engineer	Date 10-29-09
Resident Engineer's Signature:		Date 10-20-09

ESTIMATE OF COST

	THIS REQUEST	TOTAL TO DATE
ITEMS	$0.00	$0.00
FORCE ACCOUNT	$600,000.00	$600,000.00
AGREED PRICE	$0.00	$0.00
ADJUSTMENT	$0.00	$0.00
TOTAL	$600,000.00	$600,000.00

FEDERAL PARTICIPATION

☐ PARTICIPATING ☐ PARTICIPATING IN PART ☑ NONE
☐ NON-PARTICIPATING (MAINTENANCE) ☐ NON-PARTICIPATING

FEDERAL SEGREGATION (if more than one Funding Source or P.I.P. type)
☐ CCO FUNDED PER CONTRACT ☐ CCO FUNDED AS FOLLOWS

FEDERAL FUNDING SOURCE	PERCENT

ADA Notice: For individuals with sensory disabilities, this document is available in alternate formats. For information call: (916) 654-6410 or TDD (916) 654-3880 or write Records and Forms Management, 1120 N Street, MS-89, Sacramento, CA 95814.

STATE OF CALIFORNIA - DEPARTMENT OF TRANSPORTATION

CONTRACT CHANGE ORDER

Change Requested by: Engineer

CCO 231	Suppl. No. 0	Contract No. 04 - 0120R4	Road SF-80-12.6/13.2	FED. AID LOC.:

To: **CC MYERS INC**

You are directed to make the following changes from the plans and specifications or do the following described work not included in the plans and specifications for this contract. ***NOTE: This change order is not effective until approved by the Engineer.***

Description of work to be done, estimate of quantities and prices to be paid. (Segregate between additional work at contract price, agreed price and force account.) Unless otherwise stated, rates for rental of equipment cover only such time as equipment is actually used and no allowance will be made for idle time. This last percentage shown is the net accumulated increase or decrease from the original quantity in the Engineer's Estimate.

Extra Work at Force Account:

Provide for the fabrication and transport of steel plate test specimens with surface texturing as determined by the Engineer

All plate fabrication shall conform to Section 75-1.03 "Miscellaneous Bridge Metal" of the Standard Specifications.

Estimated Cost of Extra Work at Force Account $100,000.00

Estimated Cost: Increase ☑ Decrease ☐ **$100,000.00**

By reason of this order the time of completion will be adjusted as follows: 0 days

Submitted by

Signature	Resident Engineer	Date
	BILL CASEY	10-3-09

Approval Recommended by

Signature	Area Construction Manager	Date
Deanna Vilcheck	DEANNA VILCHECK	10/7/09

Engineer Approval by

Signature	Area Construction Manager	Date
Deanna Vilcheck	DEANNA VILCHECK	12/1/09

We the undersigned contractor, have given careful consideration to the change proposed and agree, if this proposal is approved, that we will provide all equipment, furnish the materials, except as may otherwise be noted above, and perform all services necessary for the work above specified, and will accept as full payment therefor the prices shown above.

NOTE: If you, the contractor, do not sign acceptance of this order, your attention is directed to the requirements of the specifications as to proceeding with the ordered work and filing a written protest within the time therein specified.

Contractor Acceptance by

Signature	(Print name and title)	Date
	STEVE PHANIS, CHIEF ESTIMATOR	10-29-09

STATE OF CALIFORNIA - DEPARTMENT OF TRANSPORTATION

CONTRACT CHANGE ORDER MEMORANDUM

DATE: 10/1/2009

TO: MIKE FORNER / DEANNA VILCHECK	FILE: E.A. 04 - 0120R4
	CO-RTE-PM SF-80-12.6/13.2
FROM: BILL CASEY	FED. NO.
CCO#: **231** SUPPLEMENT#: **0** Category Code: **CHXX**	CONTINGENCY BALANCE (incl. this change) **$48,531,483.59**
COST: **$100,000.00** INCREASE ☑ DECREASE ☐	HEADQUARTERS APPROVAL REQUIRED? ☐ YES ☑ NO
SUPPLEMENTAL FUNDS PROVIDED: **$0.00**	IS THIS REQUEST IN ACCORDANCE WITH ENVIRONMENTAL DOCUMENTS? . ☑ YES ☐ NO
CCO DESCRIPTION: Joint Plate Fabrication for Skid Testing	**PROJECT DESCRIPTION:** CONSTRUCT ROUTE 80 TEMP BYPASS STRUCTURE

Original Contract Time:	Time Adj. This Change:	Previously Approved CCO Time Adjustments:	Percentage Time Adjusted: (including this change)	Total # of Unreconciled Deferred Time CCO(s): (including this change)
475 Day(s)	**0** Day(s)	**1195** Day(s)	**252** %	**7**

THIS CHANGE ORDER PROVIDES FOR:

The fabrication of steel plate test specimens to be used for skid resistance testing by the Department.

This project, the Yerba Buena Island Detour (YBID), calls for the construction of a temporary detour for both eastbound and westbound I-80 traffic that will allow for the tie in of the new east span of the San Francisco Oakland Bay Bridge to Yerba Buena Island. The YBID encompasses three main structures, the East Tie-In to the existing bridge, the West Tie-In (WTI) to Yerba Buena Island, and the Viaduct structure between the two tie ins.

A December 14, 2006 Department strategy memorandum, approved by Tony Anziano, Toll Bridge Program Manager, and Richard Land, Chief Engineer, recommended that the Department assume the design responsibility for the East Tie-In (ETI) structure. Based on this memorandum, the design of the structure was changed from a design that incorporated the existing steel truss bridge with the new structure to a design that replaces the existing structure with a new structure (roll out / roll in).

The fabrication of these plates has been requested by Mike Whiteside - Yerba Buena Island (YBI) Coordination Engineer, in order to evaluate the skid resistance of the as-designed and various alternative surface treatments for the YBI Detour that was constructed under this contract.

The work will include the fabrication of up to 12 steel plates with minimum dimensions of 30" by 60" and with surface texturing applied as determined by the Department. The delivery of the plates to the Department's test facility will also be compensated under this change order.

Compensation for the work of this change shall be paid as an extra work at force account at an estimated cost of $100,000.00 which shall be financed from the contract's contingency funds. A cost estimate is on file.

No adjustment of contract time is warranted as the work will not affect the controlling operation.

This change was concurred with by Alec Melkonians - Asst. Project Manager and Hong Wong - Project Engineer.

Maintenance concurrence is not required as this change doesn't affect any permanent roadway features.

ADA Notice: For individuals with sensory disabilities, this document is available in alternate formats. For information call: (916) 654-6410 or TDD (916) 654-3880

CONCURRED BY:			
Construction Engineer:	Bill Casey, Resident Engineer	Date	10-3-09
Bridge Engineer:	Mike Whiteside, Toll Bridge Design	Date	9/30/09
Project Engineer:	Hong Wong, PE	Date	10/1/09
Project Manager:	Alec Melkonians	Date	10/1/09
FHWA Rep.:		Date	
Environmental:		Date	
Other (specify):		Date	
Other (specify):		Date	
District Prior Approval By:		Date	
HQ (Issue Approve) By:		Date	
Resident Engineer's Signature:		Date	10-3-09

ESTIMATE OF COST

	THIS REQUEST	TOTAL TO DATE
ITEMS	$0.00	$0.00
FORCE ACCOUNT	$100,000.00	$100,000.00
AGREED PRICE	$0.00	$0.00
ADJUSTMENT	$0.00	$0.00
TOTAL	$100,000.00	$100,000.00

FEDERAL PARTICIPATION

☐ PARTICIPATING ☐ PARTICIPATING IN PART ☑ NONE
☐ NON-PARTICIPATING (MAINTENANCE) ☐ NON-PARTICIPATING

FEDERAL SEGREGATION (if more than one Funding Source or P.I.P. type)
☐ CCO FUNDED PER CONTRACT ☐ CCO FUNDED AS FOLLOWS

FEDERAL FUNDING SOURCE	PERCENT

ADA Notice: For individuals with sensory disabilities, this document is available in alternate formats. For information call: (916) 654-6410 or TDD (916) 654-3880 or write Records and Forms Management, 1120 N Street, MS-89, Sacramento, CA 95814.

STATE OF CALIFORNIA - DEPARTMENT OF TRANSPORTATION

CONTRACT CHANGE ORDER

Change Requested by: Engineer

CCO 232	Suppl. No. 0	Contract No. 04 - 0120R4	Road SF-80-12.6/13.2	FED. AID LOC.:

To: CC MYERS INC

You are directed to make the following changes from the plans and specifications or do the following described work not included in the plans and specifications for this contract. ***NOTE: This change order is not effective until approved by the Engineer.***

Description of work to be done, estimate of quantities and prices to be paid. (Segregate between additional work at contract price, agreed price and force account.) Unless otherwise stated, rates for rental of equipment cover only such time as equipment is actually used and no allowance will be made for idle time. This last percentage shown is the net accumulated increase or decrease from the original quantity in the Engineer's Estimate.

Extra Work at Lump Sum:

Perform the following 2 items of work pertaining to the construction of the electrical duck bank and compressed air line from D Line Sta. 1+63 to 4+85:

1) Install stone bedding under the entire length of the 150 mm compressed airline. Stone bedding shall be placed in accordance with Section A-A of the duct bank utility detail plan sheet UD-4 (Sheet 2 of 2 of this change).

2) Remove and dispose of skid bent foundations A2W, A2E, B1W and B1E of the East Tie-In structure. All foundations shall be removed to the bottom of footing. Removal of the A2W footing will include the removal of the footing's CIDH piles to a depth of 1.5 meters below the bottom of that footing.

For this work, the Contractor shall be compensated a lump sum of $105,620.00. Except for the items of work specifically excluded in this change order, this sum constitutes full and final compensation, including all markups, for all costs associated with the work of this change.

Flagging costs associated with the work of this change shall be paid under Change Order No. 1 with these costs being paic at 50% by the Department. The remaining flagging costs are considered to be included in the lump sum compensation provided under this change order.

Total Cost of Extra Work at Lump Sum $105,620.00

RECEIVED 011507 FEB -3 10

Estimated Cost: Increase ☑ Decrease ☐ **$105,620.00**

By reason of this order the time of completion will be adjusted as follows: 0 days

Submitted by		
Signature [signature]	Resident Engineer BILL CASEY	Date 10-20-09
Approval Recommended by		
Signature Deanna Vilcheck	Area Construction Manager DEANNA VILCHECK	Date 10/20/09
Engineer Approval by		
Signature Deanna Vilcheck	Area Construction Manager DEANNA VILCHECK	Date 11/17/09

We the undersigned contractor, have given careful consideration to the change proposed and agree, if this proposal is approved, that we will provide all equipment, furnish the materials, except as may otherwise be noted above, and perform all services necessary for the work above specified, and will accept as full payment therefor the prices shown above.

NOTE: If you, the contractor, do not sign acceptance of this order, your attention is directed to the requirements of the specifications as to proceeding with the ordered work and filing a written protest within the time therein specified.

Contractor Acceptance by		
Signature [signature]	(Print name and title) DANIEL E. HIMICK, PRESIDENT	Date 11/6/09

DIST	COUNTY	ROUTE	KILOMETER POST TOTAL PROJECT	SHEET No	TOTAL SHEETS
04	SF	80	12.6/13.2	28	137

Caltrans Metric

11-27-06
REGISTERED CIVIL ENGINEER

PLANS APPROVAL DATE

T.T. Lai
No. 63630
Exp. 9-30-08
CIVIL
STATE OF CALIFORNIA

The State of California or its officers or agents shall not be responsible for the accuracy or completeness of electronic copies of this plan sheet.

To get to the Caltrans web site, go to: http://www.dot.ca.gov

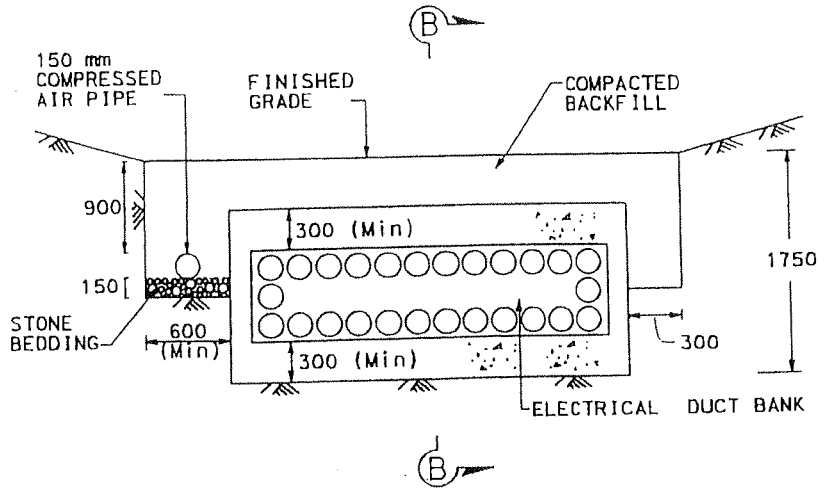

SECTION A-A

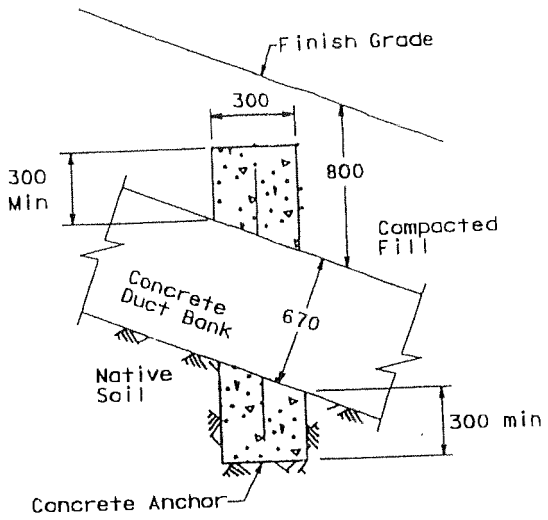

SECTION B-B

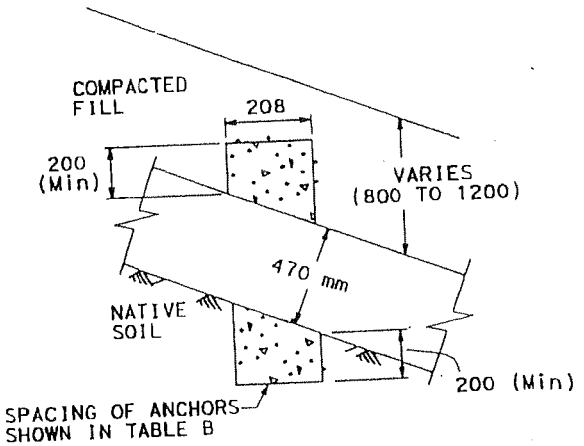

SPACING OF 470X470 DUCT BANK ANCHORS ON SLOPES

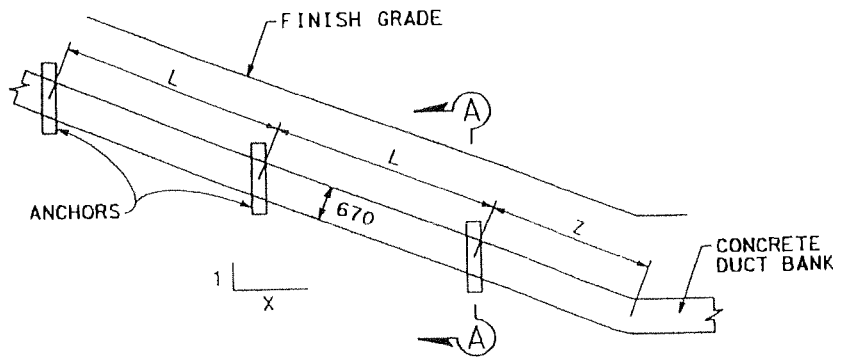

ELEVATION

CONCRETE DUCT BANK ANCHORS (3270mm (W) X 670mm (D))

TABLE A
(For 3270 X 670 DUCT BANK)

DUCT BANK SLOPE(1:X)	L (Max) (mm)	Z (Max) (mm)	Y (Max) (mm)
1:1	4570	1525	3000
1:1.5	5320	3000	4500
1:2	6140	4500	6000
1:2.5	6900	6000	7500
1:3	7500	7500	9000

TABLE B
(FOR 470 X 470 DUCT BANK)

DUCT BANK SLOPE(1:X)	LENGTH OF EXCAVATION IN STAGES (Max) (mm)	DUCT BANK ANCHOR SPACING (Max) (mm)
1:1	3000	5000
1:1.5	4500	6500
1:2	6000	8000
1:2.5	7500	9500
1:3	9000	11000

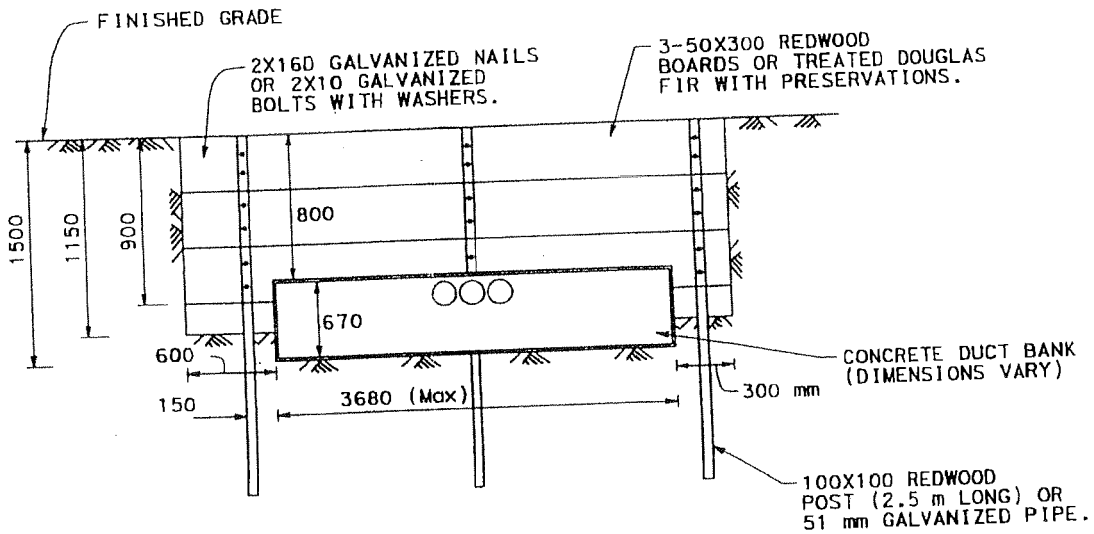

SECTION C-C

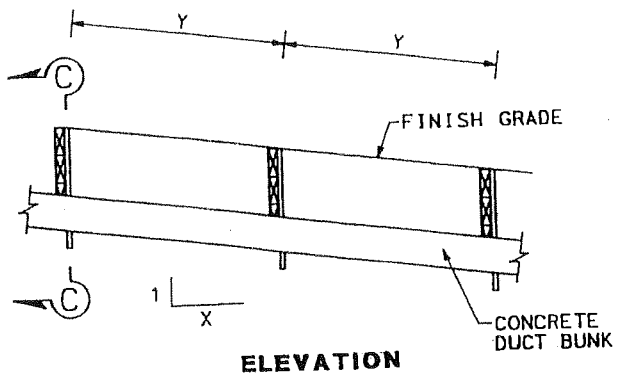

ELEVATION

SLOPE STABILIZER

NOTES:

1. SPACING OF CONCRETE ANCHORS FOR DUCT BANK ON SLOPES BETWEEN VALVES SHOWN IN TABLE A MAY BE PROPORTIONED.
2. REDWOOD BOARDS SHALL BE PLACED ON THE HIGH GROUND SIDE OF THE POSTS.
3. TRENCH BACKFILL SHALL BE COMPACTED IN LIFTS. IN LIEU OF MECHANICAL COMPACTION, SOIL CEMENT MAY BE USED. HOWEVER, THE TOP 300MM OF BACKFILL SHALL BE NATIVE SOIL, MECHANICALLY COMPACTED.
4. SPACING OF GROUND STABILIZERS FOR SLOPES BETWEEN VALVES SHOWN IN TABLE A MAY BE PROPORTIONED.
5. FOR CONCRETE DUCT BANKS OF WIDTH SHORTER THAN 500MM, NO SHORING IS REQUIRED. HOWEVER, EXCAVATION SHALL BE CARRIED OUT IN STAGES WITH MAXIMUM LENGTH OF EXCAVATION SHOWN IN TABLE B.
6. TRENCH EXCAVATION PROPOSED HERE IN THIS DRAWING IS BASED UPON AN ASSUMPTION OF THE TRENCH BEING EXCAVATED IN DENSE SAND. SHOULD THE CONDITION OF SOIL DIFFER FROM WHAT IS ASSUMED HERE, THE CONTRACTOR SHALL STOP THE WORK AND NOTIFY THE ENGINEER IMMEDIATELY FOR INSTRUCTIONS.

CONTRACT NO. 04-0120R4
CONTRACT CHANGE ORDER NO 232
SHEET 2 OF 2

UTILITY DETAILS

DUCT BANK & MANHOLES

NO SCALE

UD-4

ALL DIMENSIONS ARE IN MILLIMETERS UNLESS OTHERWISE SHOWN

DESIGNED BY T. T. LAI
CHECKED BY
DATE REVISED

STATE OF CALIFORNIA - DEPARTMENT OF TRANSPORTATION
Caltrans PROJECT DEVELOPMENT

LAST REVISION DATE PLOTTED => 28-NOV-2006
11-06-06 TIME PLOTTED => 20:42

STATE OF CALIFORNIA - DEPARTMENT OF TRANSPORTATION

CONTRACT CHANGE ORDER MEMORANDUM

TO: MIKE FORNER / DEANNA VILCHECK	FILE: E.A. 04 - 0120R4
	CO-RTE-PM SF-80-12.6/13.2
FROM: BILL CASEY	FED. NO.
CCO#: 232 SUPPLEMENT#: 0 Category Code: CBPA	CONTINGENCY BALANCE (incl. this change) $48,275,221.59
COST: $105,620.00 INCREASE ☑ DECREASE ☐	HEADQUARTERS APPROVAL REQUIRED? ☐ YES ☑ NO
SUPPLEMENTAL FUNDS PROVIDED: $0.00	IS THIS REQUEST IN ACCORDANCE WITH ENVIRONMENTAL DOCUMENTS? ☑ YES ☐ NO
CCO DESCRIPTION: Duct Bank Footing Removal & Drain Rock	**PROJECT DESCRIPTION:** CONSTRUCT ROUTE 80 TEMP BYPASS STRUCTURE

Original Contract Time:	Time Adj. This Change:	Previously Approved CCO Time Adjustments:	Percentage Time Adjusted: (including this change)	Total # of Unreconciled Deferred Time CCO(s): (including this change)
475 Day(s)	0 Day(s)	1660 Day(s)	349 %	7

THIS CHANGE ORDER PROVIDES FOR:

The demolition of skid bent footings and the placement of stone bedding pertaining to the projects electrical duct bank and compressed air line.

This project, the Yerba Buena Island Detour (YBID), was awarded in March 2004 to construct a detour that will allow for the tie in of the new east span of the San Francisco Oakland Bay Bridge to Yerba Buena Island. The YBID encompasses three main structures, the East Tie-In to the existing bridge, the West Tie-In (WTI) to Yerba Buena Island, and the Viaduct structure between the two tie ins.

Two separate Department strategy memorandums issued on December 14, 2006 entitled 'Strategy for South-South Detour Contract Completion' and December 25, 2006 entitled 'Recommendation to Construct Select Yerba Buena Island Transition Structure Foundations by Contract Change Order' were approved by Tony Anziano - Toll Bridge Program Manager, Richard Land - Chief Engineer, and the Toll Bridge Program Oversight Committee (TBPOC), which recommended the design of the ETI and WTI structures and enhancement of the Viaduct be assumed by the Department as opposed to the as-bid performance based contractor design and that a portion of the YBITS foundation work be performed under this contract by change order.

This project provides for the construction of an approximately 320 meter long electrical duct bank and adjacent compressed air line. The plans call for the placement of stone bedding under the air line but only in locations where the slope exceeds a 1:3 grade. None of the air line meets this criteria. Project Development has now requested that the entire length of the air line be placed on the stone bedding previously specified for slopes exceeding the 1:3 grade. This change order provides for furnishing and placing this stone bedding.

In addition, this change order provides for the removal and disposal of 4 large reinforced concrete footings. These footings, which conflict with the duct bank alignment, were added by change order to support the temporary skid bent system associated with the East Tie-In structure and were not included in the original scope of work pertaining to the construction of the duct bank. The work includes the removal of approximately 250 cubic meters of reinforced concrete and the top 1.5 meters of the 4 CIDH piles of footing A2W.

Compensation for the work of this change shall be paid as extra work at an agreed lump sum price of $105,620.00 which shall be financed from the contract's contingency funds. A cost analysis is on file.

No adjustment of contract time is warranted as the change will not affect the controlling operation.

This change was concurred with by Alec Melkonians - Asst. Project Manager, Minh B. Nguyen - Project Engineer, and Lina Ellis - Maintenance.

ADA Notice: For individuals with sensory disabilities, this document is available in alternate formats. For information call: (916) 654-6410 or TDD (916) 654-3880 or write

CONCURRED BY:		
Construction Engineer:	Bill Casey, Resident Engineer	Date 10/20/09
Bridge Engineer:		Date
Project Engineer:	Minh B. Nguyen, PE	Date 10/28/09
Project Manager:	Alec Melkonians	Date 10/20/09
FHWA Rep.:		Date
Environmental:		Date
Other (specify):	Lina Ellis, Maintenance	Date 10/22/09
Other (specify):		Date
District Prior Approval By:		Date
HQ (Issue Approve) By:		Date
Resident Engineer's Signature:		Date 10-20-09

ESTIMATE OF COST

	THIS REQUEST	TOTAL TO DATE
ITEMS	$0.00	$0.00
FORCE ACCOUNT	$0.00	$0.00
AGREED PRICE	$105,620.00	$105,620.00
ADJUSTMENT	$0.00	$0.00
TOTAL	$105,620.00	$105,620.00

FEDERAL PARTICIPATION

☐ PARTICIPATING ☐ PARTICIPATING IN PART ☑ NONE
☐ NON-PARTICIPATING (MAINTENANCE) ☐ NON-PARTICIPATING

FEDERAL SEGREGATION (if more than one Funding Source or P.I.P. type)
☐ CCO FUNDED PER CONTRACT ☐ CCO FUNDED AS FOLLOWS

FEDERAL FUNDING SOURCE	PERCENT

ADA Notice: For individuals with sensory disabilities, this document is available in alternate formats. For information call: (916) 654-6410 or TDD (916) 654-3880 or write Records and Forms Management, 1120 N Street, MS-89, Sacramento, CA 95814.

STATE OF CALIFORNIA - DEPARTMENT OF TRANSPORTATION

CONTRACT CHANGE ORDER

Change Requested by: Engineer

CCO 233	Suppl. No. 0	Contract No. 04 - 0120R4	Road SF-80-12.6/13.2	FED. AID LOC.:

To: CC MYERS INC

You are directed to make the following changes from the plans and specifications or do the following described work not included in the plans and specifications for this contract. ***NOTE: This change order is not effective until approved by the Engineer.***

Description of work to be done, estimate of quantities and prices to be paid. (Segregate between additional work at contract price, agreed price and force account.) Unless otherwise stated, rates for rental of equipment cover only such time as equipment is actually used and no allowance will be made for idle time. This last percentage shown is the net accumulated increase or decrease from the original quantity in the Engineer's Estimate.

Extra Work at Force Account:

In addition to the agreed lump sum, the Contractor will be paid on a Force Account basis for providing traffic control and construction area lighting as required to perform this work. The Contractor shall provide traffic control system for lane closures, and shall conform to the provisions in Sections 10-1.31, "Traffic Control System for Lane Closure," and 10-1.30, "Closure Requirements and Conditions" of the Special Provisions. Except as authorized by the Engineer, lanes shall be closed only during the hours as allowed in Special Provision section 10-1.29, "Maintaining Traffic".

Estimated Cost of Extra Work at Force Account $35,000.00

Extra Work at Lump Sum:

Perform the following items of work pertaining to the construction of a high friction surface treatment of the exposed steel roadway driving surfaces at the East Tie In expansion joints at Pier E1 (upper and lower deck) and Bent 52A (upper and lower deck):

Prepare surfaces, install high friction surface treatment in accordance with attached specification (Sheets 2 through 3 of this change order). Work that interferes with public traffic shall be performed only during the hours allowed in the Special Provisions for lane closures. The Lump Sum price anticipates that this work is to be done at night, with multiple lane closures, and with construction staged over four different nights.

For this work, the Contractor shall be compensated a lump sum of $71,915.00. Except for the items of work specifically noted as paid for under the Force Account portion of this change order, this lump sum constitutes full compensation, including markups, for furnishing all labor, material, tools, equipment, and incidentals for doing the work involved in this change.

Total Cost of Extra Work at Lump Sum $71,915.00

RECEIVED 08 FEB 10

Estimated Cost: Increase ☑ Decrease ☐ **$106,915.00**

By reason of this order the time of completion will be adjusted as follows: 0 days

Submitted by

Signature	Resident Engineer	Date
Deanna Vilcheck for	BILL CASEY	10/26/09

Approval Recommended by

Signature	Area Construction Manager	Date
Deanna Vilcheck	DEANNA VILCHECK	10/26/09

Engineer Approval by

Signature	Area Construction Manager	Date
Deanna Vilcheck	DEANNA VILCHECK	11/17/09

We the undersigned contractor, have given careful consideration to the change proposed and agree, if this proposal is approved, that we will provide all equipment, furnish the materials, except as may otherwise be noted above, and perform all services necessary for the work above specified, and will accept as full payment therefor the prices shown above.

NOTE: If you, the contractor, do not sign acceptance of this order, your attention is directed to the requirements of the specifications as to proceeding with the ordered work and filing a written protest within the time therein specified.

Contractor Acceptance by

Signature	(Print name and title)	Date
[signature]	DANIEL E. HAMICK, PRESIDENT	11/06/09

Preparation:

Surfaces shall be clean, dry, and free of all dust, oil, debris and any other material that might interfere with the bond between the epoxy resin binder material and existing surfaces. Adequate cleaning of all surfaces will be determined by the engineer. Utilities, drainage structures, curbs and any other structure within or adjacent to the treatment location shall be protected from the application of the surface treatment materials. Cover and protect all existing pavement markings that are adjacent to the application as directed by the Engineer.

Pre-treat joints and cracks greater than 1/4 inch in width and depth with the mixed epoxy specified herein. Once the epoxy in the pre-treated areas has gelled, the epoxy binder and aggregate topping installation may proceed.

Mixing and Application of Epoxy Binder:

Option (A) Hand mixing of the two–part modified epoxy base binder.
The two part modified epoxy base binder components Part (A) and Part (B) shall be proportioned to the correct ratio (50:50 +/- 4% by weight), mixed using a low speed high torque drill fitted with a helical stirrer. This application may be used when installing low application volume areas such as intersections or areas less than 300 linear feet in length or where truck mounted application machines are not applicable to the specified locations because of logistical restrictions.
The mixed components shall be hand applied onto a prepared surface at a minimum application coverage rate of 2.5lb +/- 0.5 per square yard coverage. Hand applied base binder shall be uniformly spread onto the substrate surface by means of a serrated edged squeegee. Immediately spread the high friction surfacing aggregate onto the installed two part modified epoxy base binder, at a rate of 13lb +/- 2lbs per square yard coverage.
Option (B) Mechanical mixing of the two-part modified epoxy base binder components.
The two-part modified epoxy base binder shall be applied, by a truck mounted apportioning device onto the section to be treated within the specified temperature range. The truck mounted applicator shall be capable of applying the binder and aggregate in varying widths of up to 8 feet at a uniform application thickness.
The mixed components shall be applied mechanically onto the prepared pavement surface at a minimum coverage rate of 15 gal/per minute with a uniform thickness of 60 mils onto the pavement surface.

Application of Aggregate Wearing Course:

Immediately spread the high friction aggregate onto the installed base binder, at a rate of 13lb +/- 2lbs per square yard onto the applied epoxy binder prior to the epoxy binder reaching its gel time coverage. Installer shall spread aggregate to provide complete coverage of the wet epoxy binder with aggregate as necessary to achieve a uniform surface. No exposed wet spots shall be visible once the aggregate is placed.

After the epoxy has set up, excess aggregate shall be removed by a suction sweeper.

A manufacturer's representative shall be on site to provide technical assistance during the start up operations.

CONTRACT NO. 04-0120R4

CONTRACT CHANGE ORDER NO 233

SHEET 3 OF 3

HIGH FRICTION SURFACE TREATMENT

Description:

This work consists of furnishing and applying a high friction surfacing system.

Materials:

The system shall consist of a two part exothermic epoxy resin binder.

EPOXY BINDER REQUIREMENTS		
Property	**Requirement**	**Test Method**
Ultimate Tensile Strength	2,800 psi min.	ASTM D638
Compressive Strength	1600 psi min.	ASTM D695
Gel Time	10 minutes min.	ASTM D2471
Peek Exothermic Temperature	150°F min.	ASTM D2471
Water Absorption	Less than 0.25%	ASTM D570
Shore Hardness	70 min.	ASTM D2240
Viscosity	3,000 cps min.	ASTM D2169
Bleed Test	Little trace	Swab test visual 7 days @ RT
Cure Rate	3 hours max	Thin Film @ 75°F
Mixing Ratio	1:1	n/a

The epoxy binder materials which are not exothermic in curing and do not meet the viscosity requirements, will not be allowed. Independent laboratory report documents shall be provided documenting that the epoxy binder meets the requirements of this section.

Aggregate Surface Topping:

The bauxite aggregate shall be as per the manufacture's specification. The aggregate shall be clean, dry, and free from foreign matter.

Aggregate materials shall meet these requirements:

SFC	Sideway Force Coefficient 0.7 ASTM E670
SRV/SRT	Skid Resistance Value Test 65 70 ASTM E303
PSV	Polished Stone Value 70 75 ASTM E660
Texture Depth	Sand Patch Method 1 min 1.2 ASTM E965
AAV	Aggregate Abrasion Value 20 max 4 LA Abrasion Test
Aggregate grading No 6 Sieve Size 5% max +/	0.5%
No 16 Sieve Size 5% max +/	0.5%

Application Conditions:

Do not apply the epoxy binder on a wet surface or when the ambient temperature is below 40°F or when the anticipated weather conditions would prevent the proper application of the surface treatment as determined by the manufacturer's representative.

STATE OF CALIFORNIA - DEPARTMENT OF TRANSPORTATION

CONTRACT CHANGE ORDER MEMORANDUM

TO: MIKE FORNER / DEANNA VILCHECK	FILE: E.A. 04 - 0120R4
FROM: BILL CASEY	CO-RTE-PM SF-80-12.6/13.2
	FED. NO.
CCO#: 233 SUPPLEMENT#: 0 Category Code: CXXX	CONTINGENCY BALANCE (incl. this change) $47,571,251.59
COST: $106,915.00 INCREASE ☑ DECREASE ☐	HEADQUARTERS APPROVAL REQUIRED? ☐ YES ☑ NO
SUPPLEMENTAL FUNDS PROVIDED: $0.00	IS THIS REQUEST IN ACCORDANCE WITH ENVIRONMENTAL DOCUMENTS? ☑ YES ☐ NO
CCO DESCRIPTION: Surface Treatment for ETI Joints	**PROJECT DESCRIPTION:** CONSTRUCT ROUTE 80 TEMP BYPASS STRUCTURE

Original Contract Time:	Time Adj. This Change:	Previously Approved CCO Time Adjustments:	Percentage Time Adjusted: (including this change)	Total # of Unreconciled Deferred Time CCO(s): (including this change)
475 Day(s)	0 Day(s)	1660 Day(s)	349 %	7

THIS CHANGE ORDER PROVIDES FOR:

This change provides for compensating the Contractor for all costs associated with furnishing and installing a high friction surface treatment on the roadway at each of the four (4) expansion joints plates for Bent 52A and Pier E1.

This project, the Yerba Buena Island Detour (YBID), was awarded in March 2004 to construct a detour that will allow for the tie in of the new east span of the San Francisco Oakland Bay Bridge to Yerba Buena Island. The YBID encompasses three main structures, the East Tie-In to the existing bridge, the West Tie-In (WTI) to Yerba Buena Island, and the Viaduct structure between the two tie ins.

A December 14, 2006 Department strategy memorandum, approved by Tony Anziano, Toll Bridge Program Manager, and Richard Land, Chief Engineer, recommended that the Department assume the design responsibility for the East Tie-In (ETI) structure. Based on this memorandum, the design of the structure was completed and the work has proceeded. The now-in-service ETI has new expansion joints at each end that include a steel plate roadway driving surface. The steel plate surface at each location is approximately 3 meters long x 18 meters wide, covering the full five lane width of the roadway. There are two joints on the top deck, about 75 meters apart, with two similar joint on the bottom deck at these locations.

Project Design has requested that these steel plate driving surfaces be coated with a high friction surface treatment consisting of an epoxy resin with an aggregate surface topping. This change order provides for furnishing and placing the surface treatment.

For this work the Contractor will be compensated at the agreed lump sum of $71,915.00. The agreed lump sum will cover the installation of the surface treatment. In addition to the agreed lump sum, the Contractor will be paid on a Force Account basis for the associated required traffic control and lighting work required, as directed by the Engineer. The additional Force Account Amount of this change order will be $35,000.00.

The total CCO amount of $106,915.00 shall be financed from the contract's contingency funds. A cost analysis is on file.

No adjustment of contract time is warranted as the change will not affect the controlling operation.

This change was requested by Alec Melkonians, Project Manager, in memoranda dated October 21, 2009, and concurred with by Minh B. Nguyen - Project Engineer and Lina Ellis - Maintenance.

ADA Notice: For individuals with sensory disabilities, this document is available in alternate formats. For information call: (916) 654-6410 or TDD (916) 654-3880 or write Records and Forms Management, 1120 N Street, MS-89, Sacramento, CA 95814.

CONCURRED BY:		
Construction Engineer:	Bill Casey, Resident Engineer	Date 10/26/09
Bridge Engineer:		Date
Project Engineer:	Minh B. Nguyen, PE	Date 10-19-09
Project Manager:	Alec Melkonians	Date 10/21/09
FHWA Rep.:		Date
Environmental:		Date
Other (specify):	Lina Ellis, Maintenance	Date
Other (specify):		Date
District Prior Approval By:		Date
HQ (Issue Approve) By:		Date
Resident Engineer's Signature:	Deanna Vilchede	Date 10/26/09

ESTIMATE OF COST

ITEMS	THIS REQUEST	TOTAL TO DATE
	$0.00	$0.00
FORCE ACCOUNT	$35,000.00	$35,000.00
AGREED PRICE	$71,915.00	$71,915.00
ADJUSTMENT	$0.00	$0.00
TOTAL	$106,915.00	$106,915.00

FEDERAL PARTICIPATION

☐ PARTICIPATING ☐ PARTICIPATING IN PART ☑ NONE
☐ NON-PARTICIPATING (MAINTENANCE) ☐ NON-PARTICIPATING

FEDERAL SEGREGATION (if more than one Funding Source or P.I.P. type)
☐ CCO FUNDED PER CONTRACT ☐ CCO FUNDED AS FOLLOWS

FEDERAL FUNDING SOURCE	PERCENT

ADA Notice: For individuals with sensory disabilities, this document is available in alternate formats. For information call: (916) 654-6410 or TDD (916) 654-3880 or write Records and Forms Management, 1120 N Street, MS-89, Sacramento, CA 95814.

CONTRACT CHANGE ORDER

Change Requested by: Engineer

CCO 234	Suppl. No. 0	Contract No. 04 - 0120R4	Road SF-80-12.6/13.2	FED. AID LOC.:

To: CC MYERS INC

You are directed to make the following changes from the plans and specifications or do the following described work not included in the plans and specifications for this contract. ***NOTE: This change order is not effective until approved by the Engineer.***

Description of work to be done, estimate of quantities and prices to be paid. (Segregate between additional work at contract price, agreed price and force account.) Unless otherwise stated, rates for rental of equipment cover only such time as equipment is actually used and no allowance will be made for idle time. This last percentage shown is the net accumulated increase or decrease from the original quantity in the Engineer's Estimate.

Adjustment of Compensation at Lump Sum:

Provide compensation to the Contractor for additional costs, incurred by the Contractor's steel erection subcontractor Danny's Construction Company, Inc. (DCCI), associated with the following items of work pertaining to the East Tie-In (ETI) portion of the Temporary Bypass Structure (Bridge No. 34-0006 (TEMP)):

1) Provide for the removal of the existing Span YB4 maintenance traveler trolley and water line in order to allow for the installation of the skid bent distribution and stability beam assembly for the Span YB4 roll out.

2) Furnish and install additional guy cables to the two legged ETI skid bents at Bent A3, A6, B3 and B6 as approved by the Engineer.

For this work, the Contractor shall be compensated an agreed lump sum of $54,120.00 which constitutes full and final compensation, including all markups, for all outstanding costs incurred by DCCI pertaining to the 2 items of work listed above.

Total Cost of Adjustment of Compensation at Lump Sum $54,120.00

Estimated Cost: Increase ☑ Decrease ☐ **$54,120.00**

By reason of this order the time of completion will be adjusted as follows: 0 days

Submitted by

Signature	Resident Engineer	Date
	BILL CASEY	11-19-09

Approval Recommended by

Signature	Area Construction Manager	Date
Deanna Vilcheck	DEANNA VILCHECK	11/20/09

Engineer Approval by

Signature	Area Construction Manager	Date
Deanna Vilcheck	DEANNA VILCHECK	1/11/10

We the undersigned contractor, have given careful consideration to the change proposed and agree, if this proposal is approved, that we will provide all equipment, furnish the materials, except as may otherwise be noted above, and perform all services necessary for the work above specified, and will accept as full payment therefor the prices shown above.

NOTE: If you, the contractor, do not sign acceptance of this order, your attention is directed to the requirements of the specifications as to proceeding with the ordered work and filing a written protest within the time therein specified.

Contractor Acceptance by

Signature	(Print name and title)	Date
	STEVE FRANCIS, CHIEF ESTIMATOR	12-24-09

STATE OF CALIFORNIA - DEPARTMENT OF TRANSPORTATION

CONTRACT CHANGE ORDER MEMORANDUM

TO: MIKE FORNER / DEANNA VILCHECK	FILE: E.A. 04 - 0120R4
	CO-RTE-PM SF-80-12.6/13.2
FROM: BILL CASEY	FED. NO.

CCO#: **234**	SUPPLEMENT#: **0**	Category Code: **CHPA**	CONTINGENCY BALANCE (incl. this change) **$46,337,131.59**
COST: **$54,120.00**	INCREASE ☑ DECREASE ☐		HEADQUARTERS APPROVAL REQUIRED? ☐ YES ☑ NO
SUPPLEMENTAL FUNDS PROVIDED: **$0.00**			IS THIS REQUEST IN ACCORDANCE WITH ENVIRONMENTAL DOCUMENTS? ☑ YES ☐ NO

CCO DESCRIPTION:
ETI F/W Redesign & Skid Bent Guy Cables

PROJECT DESCRIPTION:
CONSTRUCT ROUTE 80 TEMP BYPASS STRUCTURE

Original Contract Time:	Time Adj. This Change:	Previously Approved CCO Time Adjustments:	Percentage Time Adjusted: (including this change)	Total # of Unreconciled Deferred Time CCO(s): (including this change)
475 Day(s)	**0** Day(s)	**1660** Day(s)	**349** %	**7**

THIS CHANGE ORDER PROVIDES FOR:

Compensation to the contractor's steel erection subcontractor for additional costs incurred in the erection of the skid bent of the East Tie-In structure.

This project was awarded in March 2004 to construct a detour that will allow for the tie in of the new east span of the San Francisco Oakland Bay Bridge to Yerba Buena Island. The detour encompasses three main structures, the East Tie-In to the existing bridge, the West Tie-In (WTI) to Yerba Buena Island and the Viaduct structure between the two tie ins.

The original contract was awarded as a performance based contract with the contractor responsible for the design of the structures based upon meeting specified design criteria. The Department issued a December 14, 2006 memo entitled Strategy for South-South Detour Contract Completion which was approved by Tony Anziano (Toll Bridge Program Manager), Richard Land (Chief Engineer) and subsequently by the TBPOC.

The strategy memo recommended that the design of the ETI structure be assumed by the Department as opposed to the as-bid performance based contractor design. The new design of the ETI structure provides for a roll-out / roll-in concept with a new double deck steel truss span being erected adjacent to the existing span and then rolled into place after the existing span is rolled out.

As part of the ETI work, the contract provides for the construction of a skid bent system that will support the roll out of the existing span and the roll in of the new span. This change order provides compensation for additional costs incurred by the contractor's steel erection subcontractor associated with addition guy cables that were required at several bents of the skid bent towers in order to provide additional resistance to lateral movement during the erection of the bents. These additional cables were not required under the contract specifications.

Additionally, the contractor was ordered to remove the existing maintenance traveler trolley and water line on the Span YB4 truss prior to the roll out of the truss. These existing items conflicted with the installation of the skid bent distribution and stability beam assembly that were required for the roll out of the truss.

Compensation for these costs shall be paid as an adjustment of compensation at an agreed lump sum of $54,120.00 which shall be financed from the contract's contingency funds. A cost analysis is on file.

No adjustment of contract time is warranted as the change will not affect the controlling operation.

This change was concurred with by Alec Melkonians - Asst. Project Manager and Minh B. Nguyen - Project Engineer.

Maintenance concurrence is not required as this change doesn't affect any permanent roadway features.

ADA Notice: For individuals with sensory disabilities, this document is available in alternate formats. For information call: (916) 654-6410 or TDD (916) 654-3880 or write Records and Forms Management, 1120 N Street, MS-89, Sacramento, CA 95814

CONTRACT CHANGE ORDER MEMORANDUM

CONCURRED BY:		
Construction Engineer:	Bill Casey, Resident Engineer	Date 11-19-09
Bridge Engineer:		Date
Project Engineer:	Minh B. Nguyen, PE	Date 11-18-09
Project Manager:	Alec Melkonians	Date 11-19-09
FHWA Rep.:		Date
Environmental:		Date
Other (specify):		Date
Other (specify):		Date
District Prior Approval By:		Date
HQ (Issue Approve) By:		Date
Resident Engineer's Signature:		Date
		11-19-09

ESTIMATE OF COST

	THIS REQUEST	TOTAL TO DATE
ITEMS	$0.00	$0.00
FORCE ACCOUNT	$0.00	$0.00
AGREED PRICE	$0.00	$0.00
ADJUSTMENT	$54,120.00	$54,120.00
TOTAL	$54,120.00	$54,120.00

FEDERAL PARTICIPATION

☐ PARTICIPATING ☐ PARTICIPATING IN PART ☐ NONE
☐ NON-PARTICIPATING (MAINTENANCE) ☐ NON-PARTICIPATING

FEDERAL SEGREGATION (if more than one Funding Source or P.I.P. type)
☐ CCO FUNDED PER CONTRACT ☐ CCO FUNDED AS FOLLOWS

FEDERAL FUNDING SOURCE	PERCENT

ADA Notice: For individuals with sensory disabilities, this document is available in alternate formats. For information call: (916) 654-6410 or TDD (916) 654-3880 or write Records and Forms Management, 1120 N Street, MS-89, Sacramento, CA 95814.

STATE OF CALIFORNIA - DEPARTMENT OF TRANSPORTATION

CONTRACT CHANGE ORDER

Change Requested by: Engineer

CCO: 235	Suppl. No. 0	Contract No. 04 - 0120R4	Road SF-80-12.6/13.2	FED. AID LOC.:

To: CC MYERS INC

You are directed to make the following changes from the plans and specifications or do the following described work not included in the plans and specifications for this contract. ***NOTE: This change order is not effective until approved by the Engineer.***

Description of work to be done, estimate of quantities and prices to be paid. (Segregate between additional work at contract price, agreed price and force account.) Unless otherwise stated, rates for rental of equipment cover only such time as equipment is actually used and no allowance will be made for idle time. This last percentage shown is the net accumulated increase or decrease from the original quantity in the Engineer's Estimate.

Extra Work at Force Account:

Furnish and install additional advisory, curve warning, and speed radar signing; furnish and install additional lighting; furnish and install CMS mounting brackets and place additional pavement delineation on the ED1 Line and WD1 Line as shown on Sheets No. 2 through 23 of this change order and as authorized by the Engineer.

Estimated Cost of Extra Work at Force Account $300,000.00

RECEIVED
011624 MAR 16 10

Estimated Cost: Increase ☑ Decrease ☐ **$300,000.00**

By reason of this order the time of completion will be adjusted as follows: 0 days

Submitted by

Signature	Resident Engineer	Date
[signature]	BILL CASEY	12-30-09

Approval Recommended by

Signature	Area Construction Manager	Date
Deanna Vilcheck	DEANNA VILCHECK	1/29/10

Engineer Approval by

Signature	Area Construction Manager	Date
Pete E. Rosenthal	DEANNA VILCHECK	2/18/10

We the undersigned contractor, have given careful consideration to the change proposed and agree, if this proposal is approved, that we will provide all equipment, furnish the materials, except as may otherwise be noted above, and perform all services necessary for the work above specified, and will accept as full payment therefor the prices shown above.

NOTE: If you, the contractor, do not sign acceptance of this order, your attention is directed to the requirements of the specifications as to proceeding with the ordered work and filing a written protest within the time therein specified.

Contractor Acceptance by

Signature	(Print name and title)	Date
[signature]	DANIEL E. HIMICK, PRESIDENT	2/1/10

2-22-82	

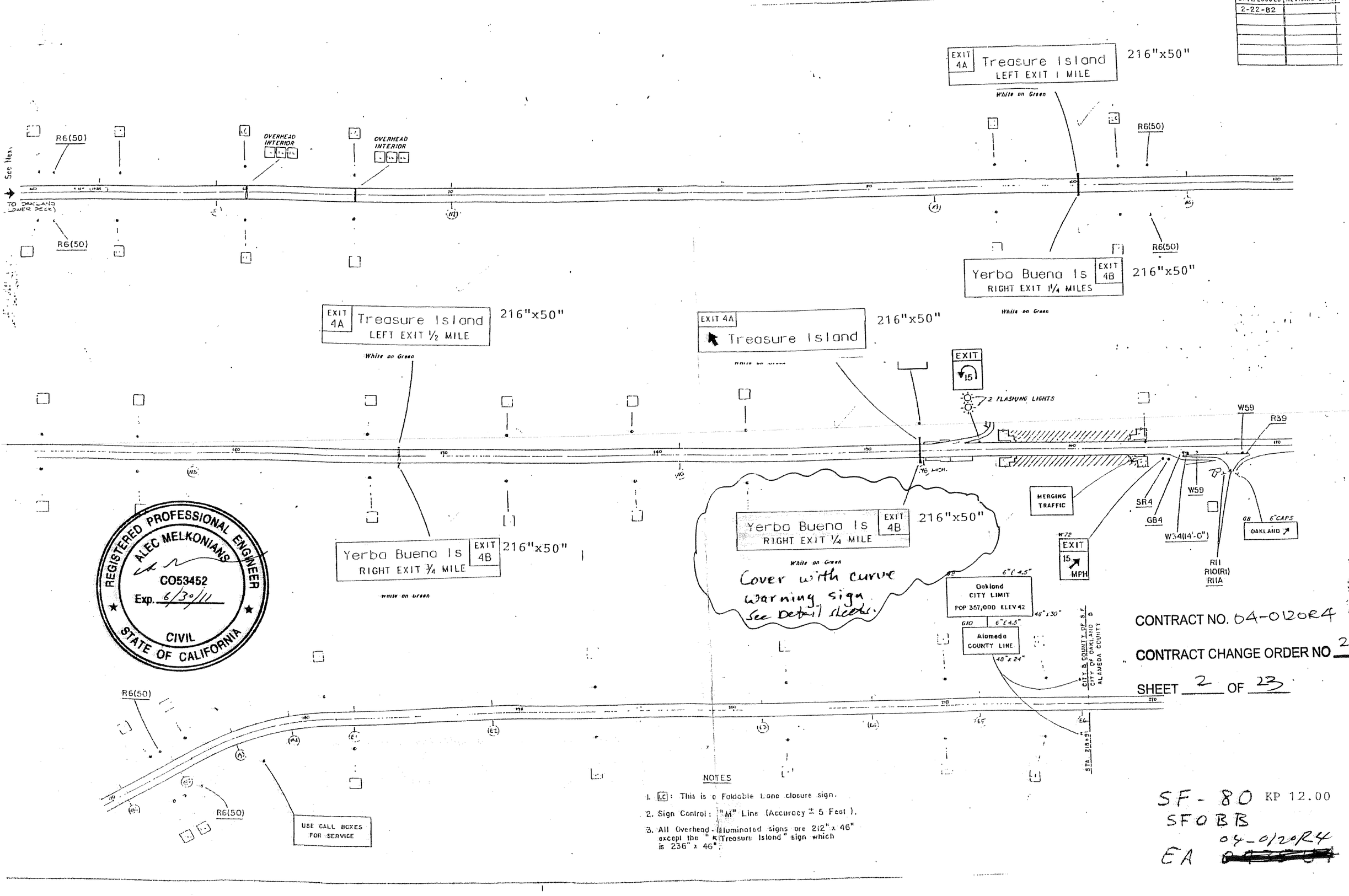

REGISTERED PROFESSIONAL ENGINEER
ALEC MELKONIANS
CO53452
Exp. 6/30/11
CIVIL
STATE OF CALIFORNIA

NOTES

1. [LC]: This is a Foldable Lane closure sign.
2. Sign Control: "M" Line (Accuracy ± 5 Feet).
3. All Overhead-Illuminated signs are 212" x 46" except the "Treasure Island" sign which is 236" x 46".

CONTRACT NO. 04-0120R4

CONTRACT CHANGE ORDER NO 235

SHEET 2 OF 23

SF-80 KP 12.00
SFOBB
04-0120R4
EA [redacted]

REGISTERED PROFESSIONAL ENGINEER
ALEC MELKONIANS
C053452
Exp. 6/30/11
CIVIL
STATE OF CALIFORNIA

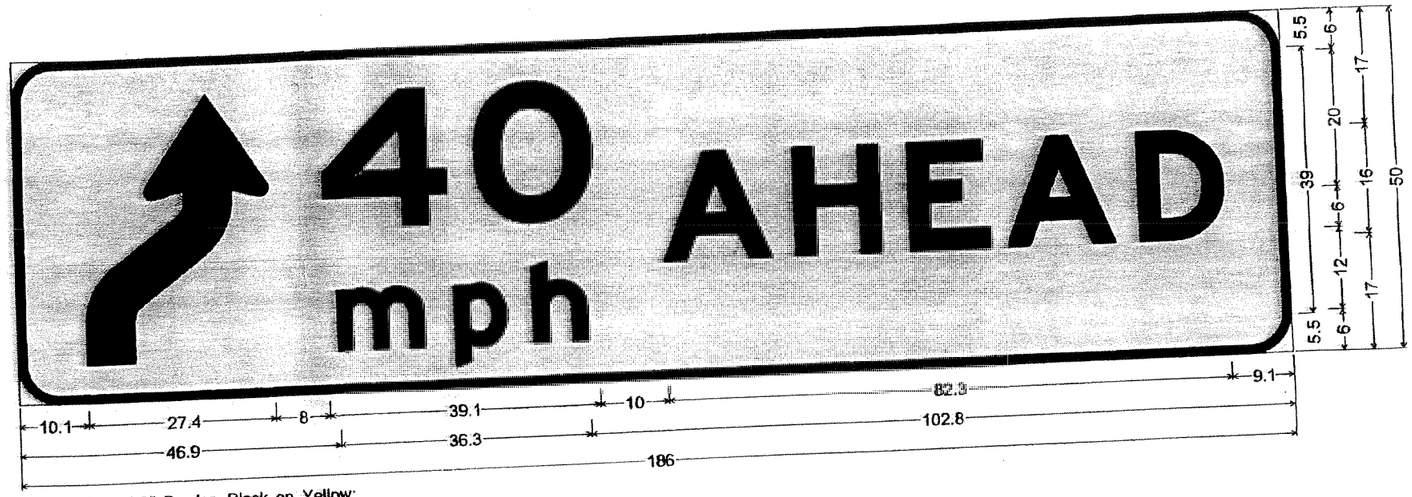

6.0" Radius, 1.3" Border, Black on Yellow;
W1-4_48x48; "40" E Mod; "mph" E Mod; "AHEAD" E Mod; " " E Mod;

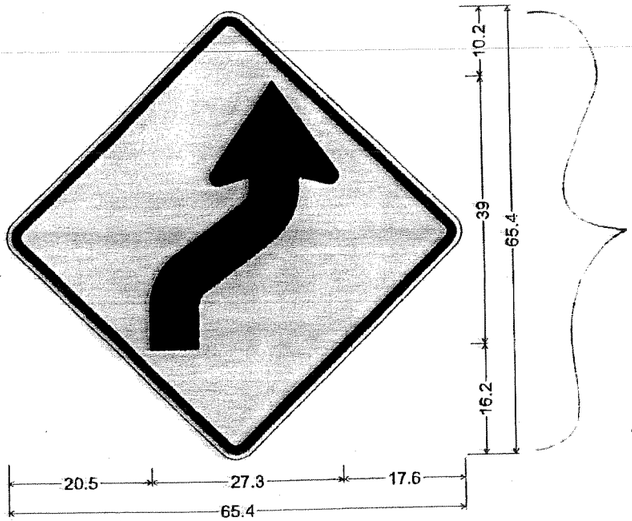

W1-4_48x48;
48.0" across sides 3.0" Radius, 1.3" Border, 0.8" Indent, Black on Yellow;
W1-4_48x48;

Option A

Arrow design is based on a standard curve warning sign.

The dimension of the "Yerba Buena Is" are 216" x 50".

As seen in the photo, this sign was covered by solid green.
The curve sign above would fit on the solid green. If necessary (to fit mounting brackets), use option B, which is the same size as the original sign (just more yellow).

CONTRACT NO. 04-0120R4

CONTRACT CHANGE ORDER NO 235

SHEET 3 OF 23

6.0" Radius, 1.3" Border, Black on Yellow;
W1-4_48x48; "40" E Mod; "mph" E Mod; "AHEAD" E Mod; " " E Mod;

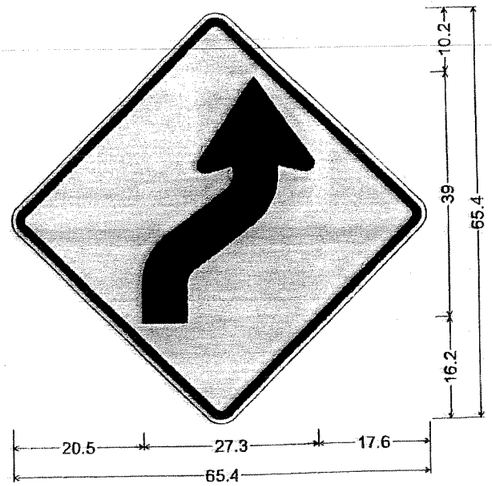

W1-4_48x48;
48.0" across sides 3.0" Radius, 1.3" Border, 0.8" Indent, Black on Yellow;
W1-4_48x48;

Option B

REGISTERED PROFESSIONAL ENGINEER
ALEC MELKONIANS
C059452
Exp. 6/30/11
CIVIL
STATE OF CALIFORNIA

CONTRACT NO. 04-0120R4

CONTRACT CHANGE ORDER NO 235

SHEET 4 OF 23

DATE ENTERED	REVISION DATE	BY
11-01-1982		
	06-02-05	H.H

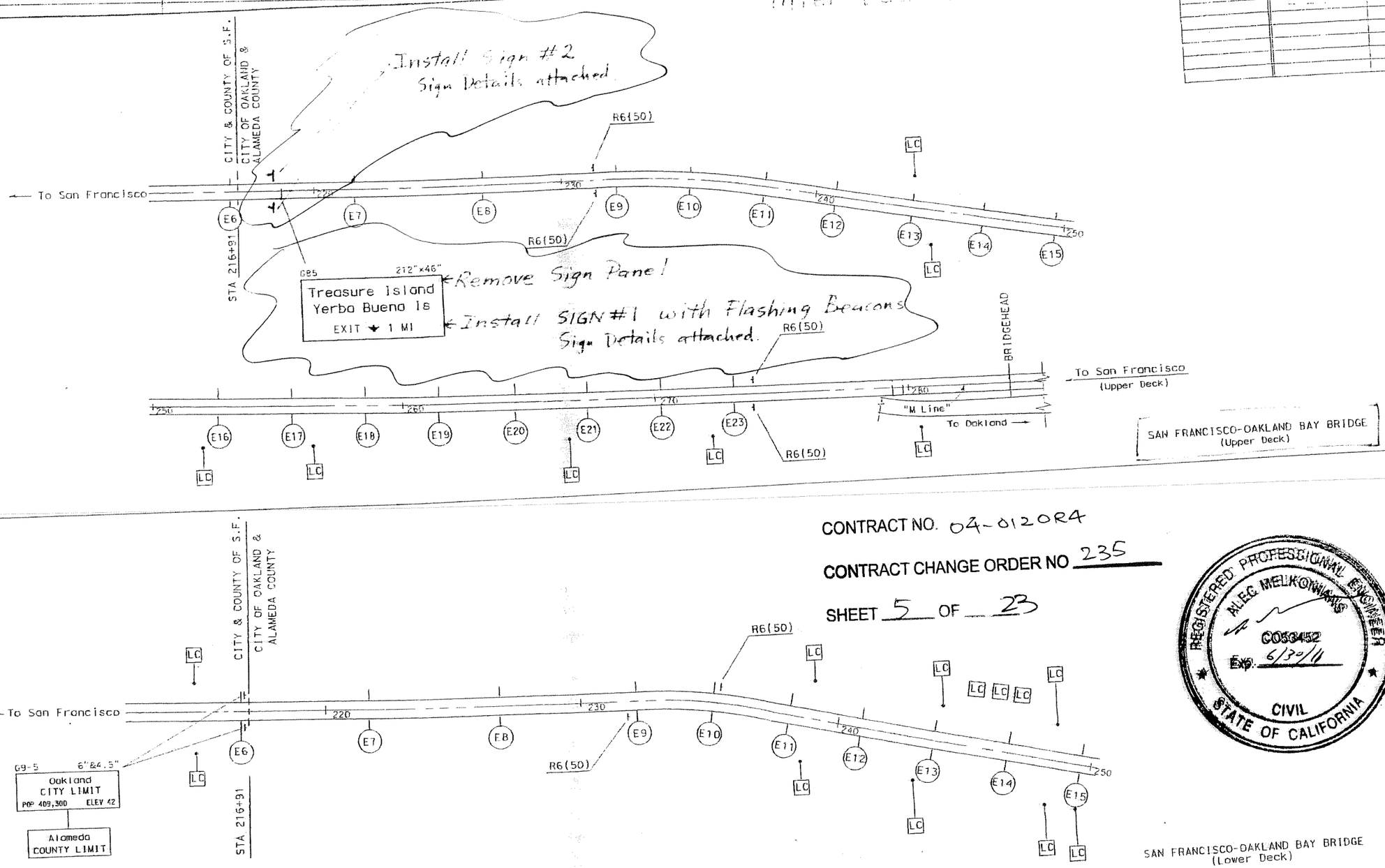

CONTRACT NO. 04-0120R4

CONTRACT CHANGE ORDER NO 235

SHEET 5 OF 23

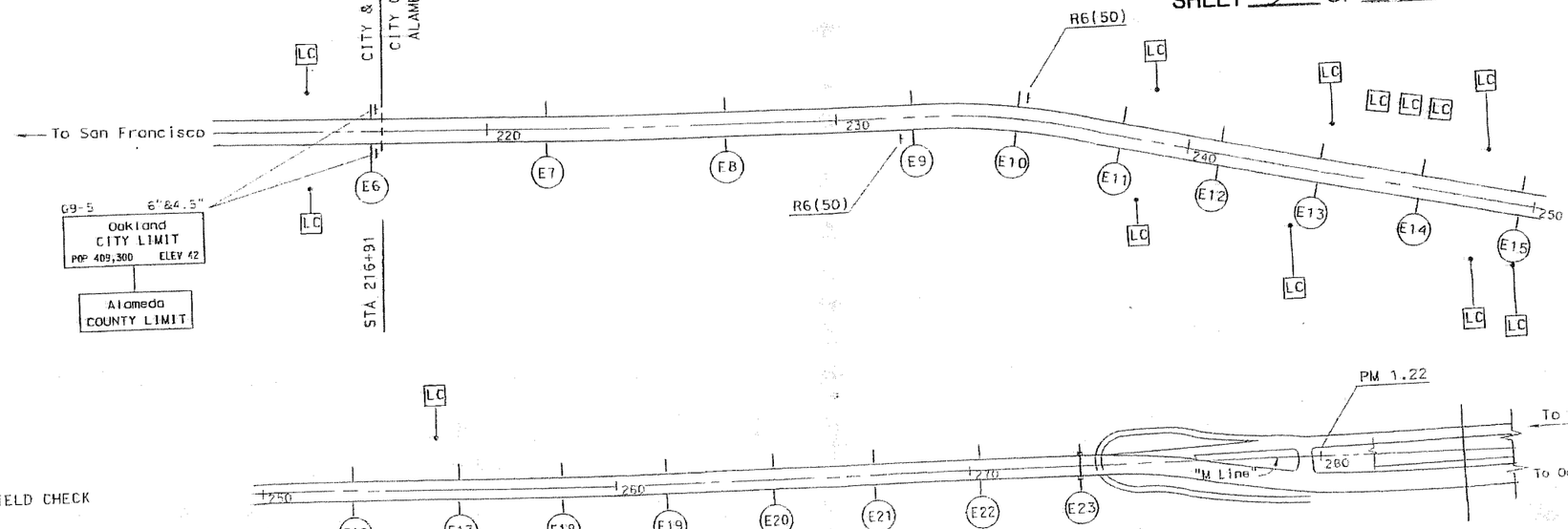

NOTE: NEED FIELD CHECK

SIGN RECORDS
ALA 080.01

REGISTERED PROFESSIONAL ENGINEER
ALEC MELKONIAN
C056452
Exp. 6/30/11
CIVIL
STATE OF CALIFORNIA

FOR REDUCED PLANS ORIGINAL SCALE IS IN INCHES 0 1 2 3

USERNAME = mescobar
DGN FILE = 01a08001.dgn

PM 0.00/1.35

DATE PLOTTED = 03-JUN-2005

SIGN #1 : Remove existing guide sign panel (size 212" x 46") and install new warning sign panel (size 180" x 46"). Install Flashing Beacons on the left and right sides of SIGN #1.

6.0" Radius, 1.3' Border, Black on Yellow;
arrow W1-4L; "35" E Mod; "mph" E Mod; "AHEAD" E Mod;

Existing Sign Panel Near (E6 (County Line) is 212" wide. SIGN #1 sign panel is 180" wide, which leaves 32" (16" each side) for the installation of flashing beacons.

REGISTERED PROFESSIONAL ENGINEER
ALEC MELKONIANS
C053452
Exp. 6/30/11
CIVIL
STATE OF CALIFORNIA

CONTRACT NO. 04-012084
CONTRACT CHANGE ORDER NO. 235
SHEET 6 OF 22

SIGN #2 : Install two signs - one sign on the right side of the bridge and one sign on the left side of the bridge - at (or as close a possible) to the existing OH sign.

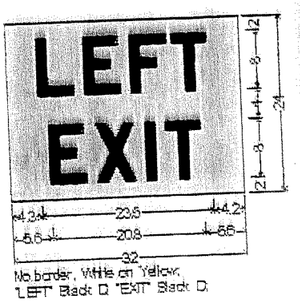

CONTRACT NO. 04-0120R4

CONTRACT CHANGE ORDER NO 235

SHEET 7 OF 23

DATE	REVISED BY	DATE REVISED
CALCULATED/ DESIGNED BY	BJ	
CHECKED BY	CL	

DESIGN OVERSIGHT

STATE OF CALIFORNIA - DEPARTMENT OF TRANSPORTATION

GENERAL NOTES

1. All electrical work shall conform to the latest issue of State of California Department of Transportation Standard Specifications and Standard Plans. These general notes and special provisions under this contract also apply. For any conflict of provisions, California State Guidelines apply.
2. All conduit routing is shown diagrammatically. Pull box locations are located and shown on plan drawings. The contractor shall provide additional pull boxes as required. Exact location of equipment and devices may be adjusted by field conditions or as directed by the Engineer.
3. Minimum conduit sizes shall be 21 mm. All conduits located outside shall be rigid galvanized steel, PVC coated.
4. All equipment and devices shall be provided with nameplate tags as shown in the drawings.
5. All feeders and branch circuits shall be provided with an equipment ground wire.
6. The Contractor shall label all conductors and cables per cable schedules.
7. The Contractor shall provide all conduits with permanent field markers and labels
8. The Contractor shall provide and install new armored cables on metal racks, troughs, in cable trays or secured to supports spaced not greater than 1500 mm apart.
9. The Contractor shall provide splice boxes for armored cables.
10. For other related work not shown on the plan sheets, see Electrical Special Provision.
11. Contractor to verify all controlling field dimensions before ordering or fabricating any material.
12. Provide and install new armored cables or conduit as shown, scheduled and as needed in construction. Support cables or conduit from surface using 41x41 channel, hot dipped galvanized and appropriate strut mounted clamps. See Detail. Support armored cables or conduit horizontally along Temporary Bypass Structure (TBS) using steel ladder cable trays.
13. New cable will be completely routed and tested before cutting existing circuits and/ or interconnecting new.
15. Contractor to provide expansion fittings or loops at bridge expansion joints or points of deflection. Provide stainless steel support grips to hold the weight of electrical cable as it loops or hangs in vertical, sloping or horizontal position.
16. All materials and equipment are subject to Engineers written approval.

ABBREVIATIONS

NOT LISTED IN CALTRANS STANDARD PLANS ES-1A AND ES-1B

CEC	California Electrical Code
Cont'd	Continued
EB	Eastbound
(E), Exist	Existing
G, GND, Gnd	Ground (ground cable)
GRS	Galvanized Rigid Steel
JB	Junction Box
kV	kilovolt
LD	Lower Deck
LPS	Low Pressure Sodium
mh	Man Hole
N.E.C.	National Electrical Code
PWR	Power
SFOBB	San Francisco Oakland Bay Bridge
UD	Upper Deck
V	Volt
W	Wire
WB	Westbound
YBI	Yerba Bueno Island

SYMBOLS

NOT LISTED IN CALTRANS STANDARD PLANS ES-1A, ES-2B AND ES-1C

⟨1⟩	Sheet Notes, applicable only to the Drawing 1=Sequential number
———	Conduit or Cable run, exposed
– – – –	Conduit run concealed in wall, concrete barrier, slab or routed underground duct bank

Dist	COUNTY	ROUTE	KILOMETER POST TOTAL PROJECT	SHEET No.	TOTAL SHEETS
04	SF	80			

Carol Light 11/05/09
REGISTERED ELECTRICAL ENGINEER

PLANS APPROVAL DATE

REGISTERED PROFESSIONAL ENGINEER — CAROL LIGHT — No. 10145 — Exp. 09/30/11 — ELECTRICAL — STATE OF CALIFORNIA

THE STATE OF CALIFORNIA OR ITS OFFICERS OR AGENTS SHALL NOT BE RESPONSIBLE FOR THE ACCURACY OR COMPLETENESS OF ELECTRONIC COPIES OF THIS PLAN SHEET.

SILVERMAN & LIGHT
1201 PARK AVENUE - SUITE 100
EMERYVILLE, CA 94608-3632

The State of California or its officers or agents shall not be responsible for the accuracy or completeness of electronic copies of this plan sheet.

Caltrans now has a web site! To get to the web site, go to http://www.dot.ca.gov

DRAWING No.	DRAWING TITLE
E-1	ELECTRICAL SYMBOLS, ABBREVIATIONS AND PROJECT NOTES TEMPORARY BYPASS STRUCTURE
E-2	SPEED RADAR SIGN-WESTBOUND TEMPORARY BYPASS STRUCTURE
E-3	SPEED RADAR SIGN-EASTBOUND TEMPORARY BYPASS STRUCTURE
E-4	SPEED RADAR SIGN MOUNTING DETAILS TEMPORARY BYPASS STRUCTURE
E-5	SPEED RADAR SIGN BLOCK DIAGRAM TEMPORARY BYPASS STRUCTURE
E-6	DETAILS TYPICAL CONDUIT/CABLE SUPPORT TEMPORARY BYPASS STRUCTURE

CONTRACT NO. 04-0120R4

CONTRACT CHANGE ORDER NO 235

SHEET 8 OF 23

ELECTRICAL SYMBOLS, ABBREVIATIONS AND PROJECT NOTES
TEMPORARY BYPASS STRUCTURE
NO SCALE

E-1

LAST REVISION DATE PLOTTED => 00-00-00 TIME PLOTTED =>

BORDER LAST REVISED 10/07/2009

RELATIVE BORDER SCALE 0 20 40 60 80

USERNAME => &USER

CU 04251

4120R3uaE01.dgn 11/6/2009 8:40:39 AM

Dist	COUNTY	ROUTE	KILOMETER POST TOTAL PROJECT	SHEET No.	TOTAL SHEETS
04	SF	80			

Carol Light 11/05/09
REGISTERED ELECTRICAL ENGINEER

PLANS APPROVAL DATE

REGISTERED PROFESSIONAL ENGINEER CAROL LIGHT No. 10145 Exp. 09/30/11 ELECTRICAL STATE OF CALIFORNIA

THE STATE OF CALIFORNIA OR ITS OFFICERS OR AGENTS SHALL NOT BE RESPONSIBLE FOR THE ACCURACY OR COMPLETENESS OF ELECTRONIC COPIES OF THIS PLAN SHEET.

SILVERMAN & LIGHT
1201 PARK AVENUE - SUITE 100
EMERYVILLE, CA 94608-3632

The State of California or its officers or agents shall not be responsible for the accuracy or completeness of electronic copies of this plan sheet.

Caltrans now has a web site! To get to the web site, go to http://www.dot.ca.gov

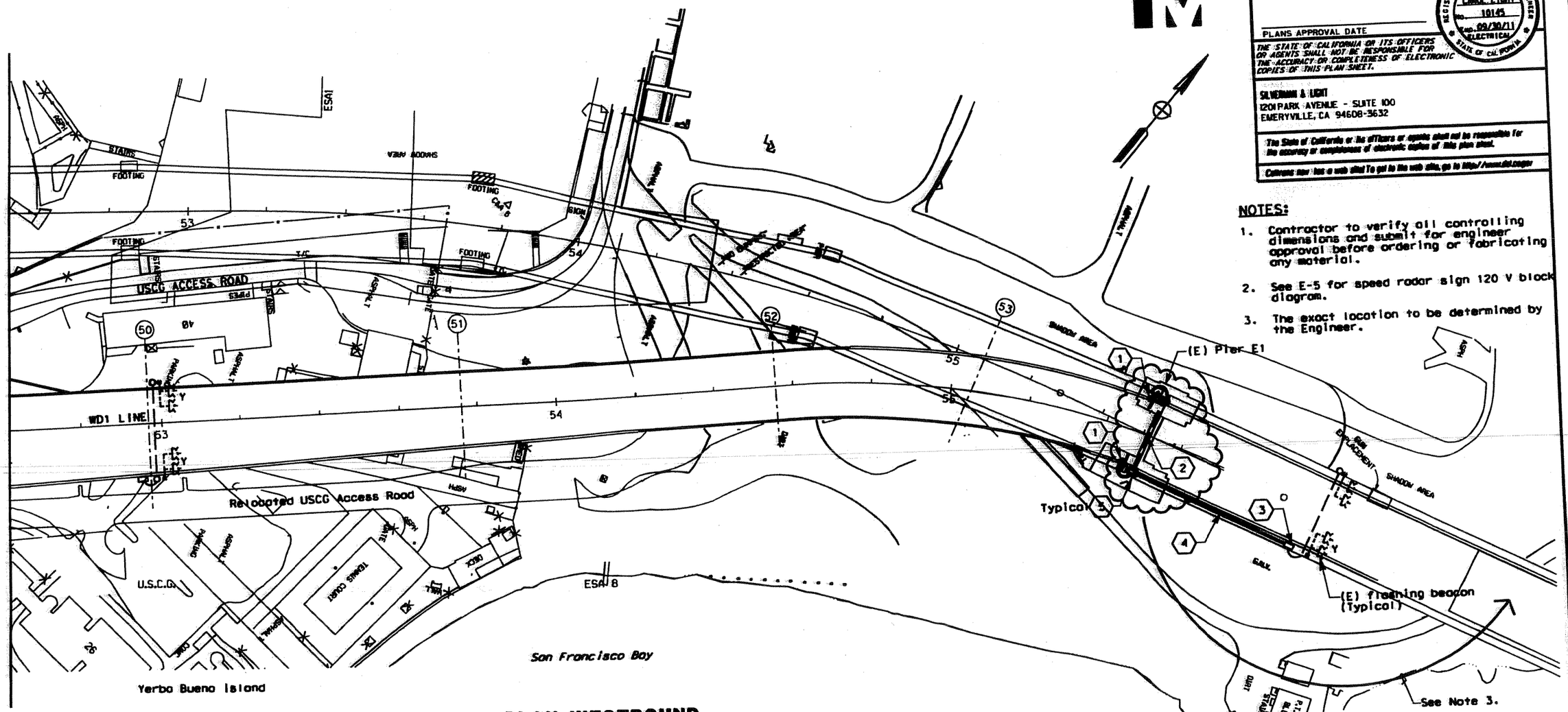

PLAN-WESTBOUND

NOTES:

1. Contractor to verify all controlling dimensions and submit for engineer approval before ordering or fabricating any material.
2. See E-5 for speed radar sign 120 V block diagram.
3. The exact location to be determined by the Engineer.

SHEET NOTES:

1. Install new pole mounted Speed Radar Sign with 2 digits, super bright amber LEDs display characters. (Coordinate with the State for digit size before ordering or fabricating the equipment), Type K Band, single direction Doppler radar, FCC part 15 compliant, 12 degrees, +/- 2 degrees beam width with +/- 1.5 mph accuracy. 120 V, in NEMA 3R self contained enclosure and with 6 mm thick shatter resistant GE Lexan display cover to protect LEDs. See sheet E-4 for more information.
2. Route 27 mm type 2 conduit with 3#12 + 1#12G below upper deck. Install unistrut and conduit clamps every 1.5 meters.
3. Install new 5 amp -2 pole circuit breaker in existing transformer box for 120 V, supply to new speed radar sign unit.
4. Install new 2#12 +G armored cable from (E) transformer box to new speed radar sign and connect. Route cable on (E) cable tray and provide unistut and cable clamps support every 1.5 meters.
5. Install new NEMA type 4 slice box. Splice box to have minimum dimension of 305(L) x 305(W) x 152(D). Fasten box on the existing concrete barrier with (4) 10-24 concrete expansion anchors and head hex screws.

CONTRACT NO. 04-0120R4

CONTRACT CHANGE ORDER NO 235

SHEET 9 OF 23

SPEED RADAR SIGN
TEMPORARY BYPASS STRUCTURE

SCALE: 1:500

E-2

ALL DIMENSIONS ARE IN METERS UNLESS OTHERWISE SHOWN

THIS PLAN ACCURATE FOR ELECTRICAL WORK ONLY

RELATIVE BORDER SCALE 0 20 40 60 80

USERNAME => $USER

CU 04251

EA 0120R3

LAST REVISION 00-00-00 DATE PLOTTED => $DATE TIME PLOTTED => $TIME

STATE OF CALIFORNIA - DEPARTMENT OF TRANSPORTATION

DESIGN OVERSIGHT

CALCULATED/DESIGNED BY BJ DATE REVISED BY

CHECKED BY CL DATE REVISED

BORDER LAST REVISED 10/07/2009

4120R3uaE02.dgn 11/6/2009 8:43:29 AM

Dist	COUNTY	ROUTE	KILOMETER POST TOTAL PROJECT	SHEET NO.	TOTAL SHEETS
04	SF	80			

Carol Light 11/05/09
REGISTERED ELECTRICAL ENGINEER

REGISTERED PROFESSIONAL ENGINEER CAROL LIGHT No. 10145 Exp. 09/30/11 ELECTRICAL STATE OF CALIFORNIA

PLANS APPROVAL DATE

THE STATE OF CALIFORNIA OR ITS OFFICERS OR AGENTS SHALL NOT BE RESPONSIBLE FOR THE ACCURACY OR COMPLETENESS OF ELECTRONIC COPIES OF THIS PLAN SHEET.

SILVERMAN & LIGHT
1201 PARK AVENUE - SUITE 100
EMERYVILLE, CA 94608-3632

The State of California or its officers or agents shall not be responsible for the accuracy or completeness of electronic copies of this plan sheet.

Caltrans now has a web site! To get to the web site, go to http://www.dot.ca.gov

CALCULATED/ DESIGNED BY BJ
CHECKED BY CL
DATE
REVISED BY
DATE REVISED
DIVISION OVERSIGHT

STATE OF CALIFORNIA - DEPARTMENT OF TRANSPORTATION

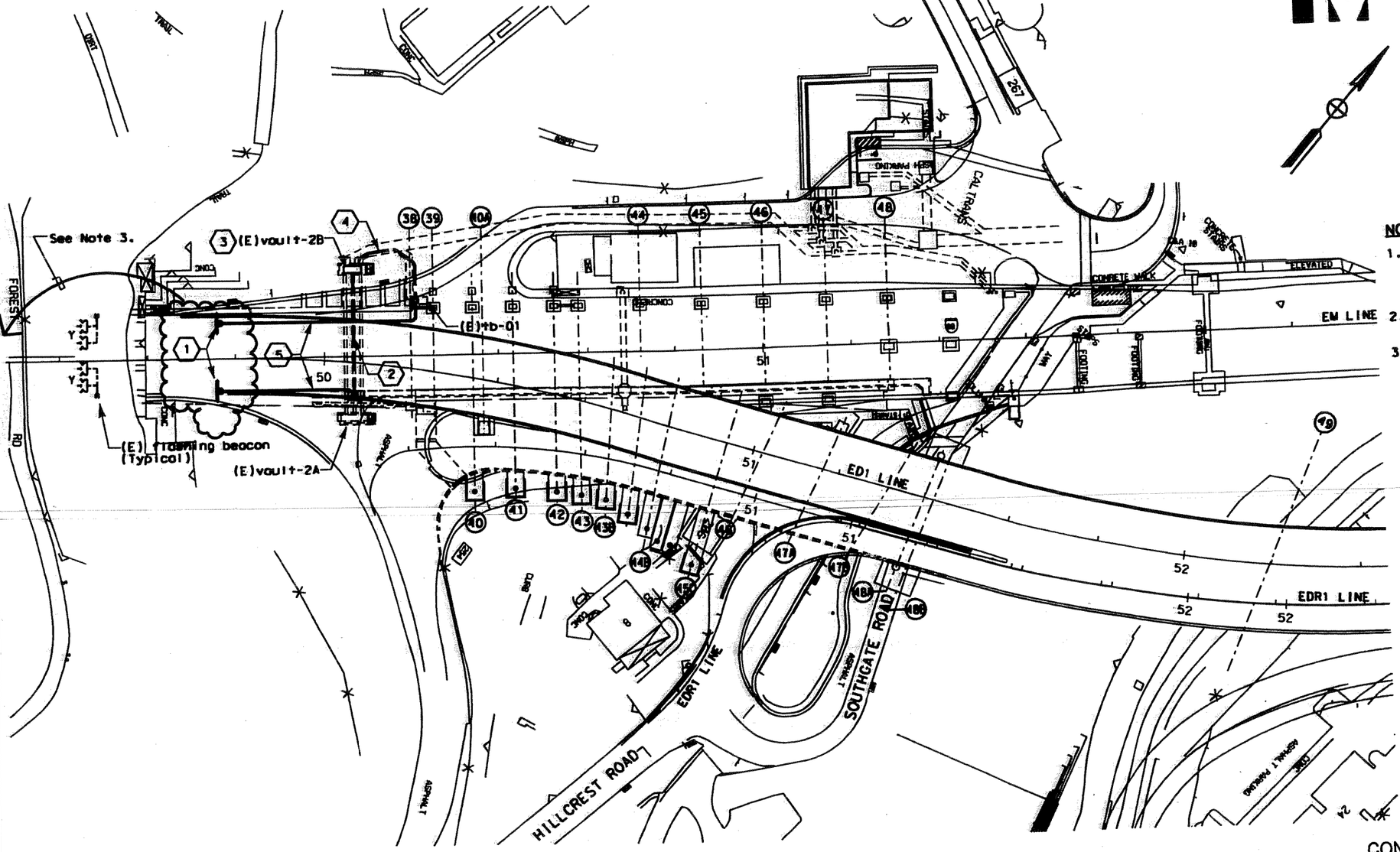

PLAN-EASTBOUND

NOTES:

1. Contractor to verify all controlling dimensions and submit for engineer approval before ordering or fabricating any material.
2. See E-5 for speed radar sign 120 V block diagram.
3. The exact location to be determined by the Engineer.

SHEET NOTES:

(1) Install new pole mounted Speed Radar Sign with 2 digits, super bright amber LEDs display characters. (Coordinate with the State for digit size before ordering or fabricating the equipment), Type K Band , single direction Doppler radar, FCC part 15 compliant, 12 degrees, +/- 2 degrees beam width with +/- 1.5 mph accuracy. 120 V, in NEMA 3R self contained enclosure and with 6 mm thick shatter resistant GE Lexan display cover to protect LEDs. See sheet E-4 for more information.

(2) Route 27 mm type 2 conduit with 3#12 + 1#12G from speed radar sign to (E) transformer box located in (E) vault-2B via (E) electrical duct.

(3) Install new 5 amp -2 pole circuit breaker in existing transformer box located in (E) vault 2B for 120 V, supply to new speed radar sign unit.

(4) Route new 2#12 +G armored cable from (E) transformer box located in (E) vault-2B via (E) electrical duct, (E) TB-01 to south-side speed radar sign.

(5) Install and secure armored cable to existing tunnel wall. Provide cable support using unistrut and cable clamps every 1.5 meter.

CONTRACT NO. 04-0120R4

CONTRACT CHANGE ORDER NO 235

SHEET 10 OF 23

SPEED RADAR SIGN
TEMPORARY BYPASS STRUCTURE

SCALE: 1:500

E-3

THIS PLAN ACCURATE FOR ELECTRICAL WORK ONLY

ALL DIMENSIONS ARE IN METERS UNLESS OTHERWISE SHOWN

RELATIVE BORDER SCALE 0 20 40 60 80

USERNAME => %USER

CU 04251

EA 0120R4

LAST REVISION DATE PLOTTED => %DATE
00-00-00 TIME PLOTTED => %TIME

BORDER LAST REVISED 10/07/2009

4120R3uaE03.dgn 11/6/2009 8:46:09 AM

CONTRACT NO. 04-0120R4

CONTRACT CHANGE ORDER NO 235

SHEET 11 OF 23

Dist	COUNTY	ROUTE	KILOMETER POST TOTAL PROJECT	SHEET NO.	TOTAL SHEETS
04	SF	80			

REGISTERED ELECTRICAL ENGINEER — Carol Light — 11/03/09

CAROL LIGHT — No. 16145 — Exp. 09/30/11 — ELECTRICAL — REGISTERED PROFESSIONAL ENGINEER — STATE OF CALIFORNIA

PLANS APPROVAL DATE

THE STATE OF CALIFORNIA OR ITS OFFICERS OR AGENTS SHALL NOT BE RESPONSIBLE FOR THE ACCURACY OR COMPLETENESS OF ELECTRONIC COPIES OF THIS PLAN SHEET.

SILVERMAN & LIGHT
1201 PARK AVENUE - SUITE 100
EMERYVILLE, CA 94608-3632

The State of California or its officers or agents shall not be responsible for the accuracy or completeness of electronic copies of this plan sheet.

Caltrans now has a web site! To get to the web site, go to http://www.dot.ca.gov

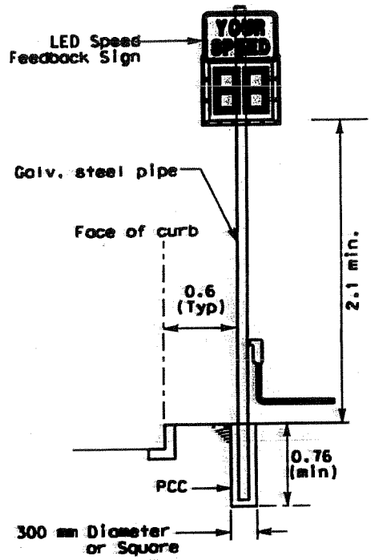

TYPICAL SPEED RADAR SIGN POST INSTALLATION
(AT "ED1" 49+50)

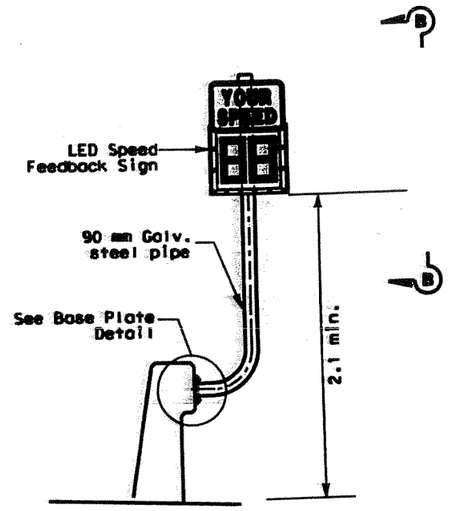

TYPICAL SPEED RADAR SIGN CONNECTION TO BARRIER
SCALE: NONE

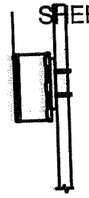

SECTION B-B
SCALE: NONE

NOTE:
1. Exact mounting detail to be determined by the Engineer.

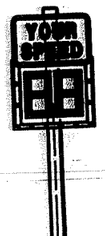

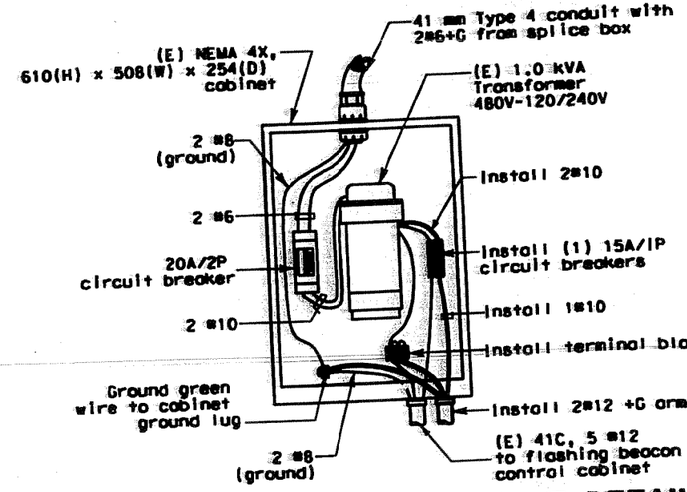

(E) TRANSFORMER ENCLOSURE DETAIL
NO SCALE
(Front door not shown)

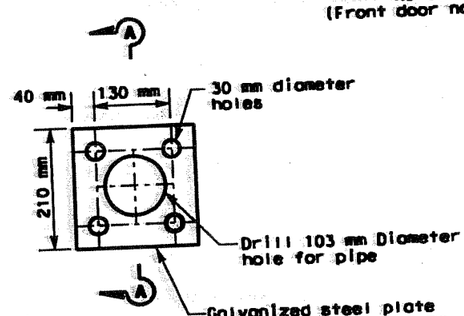

BASE PLATE DETAIL
SCALE: 1:5

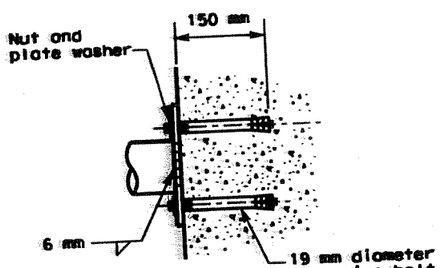

SECTION A-A
SCALE: 1:5

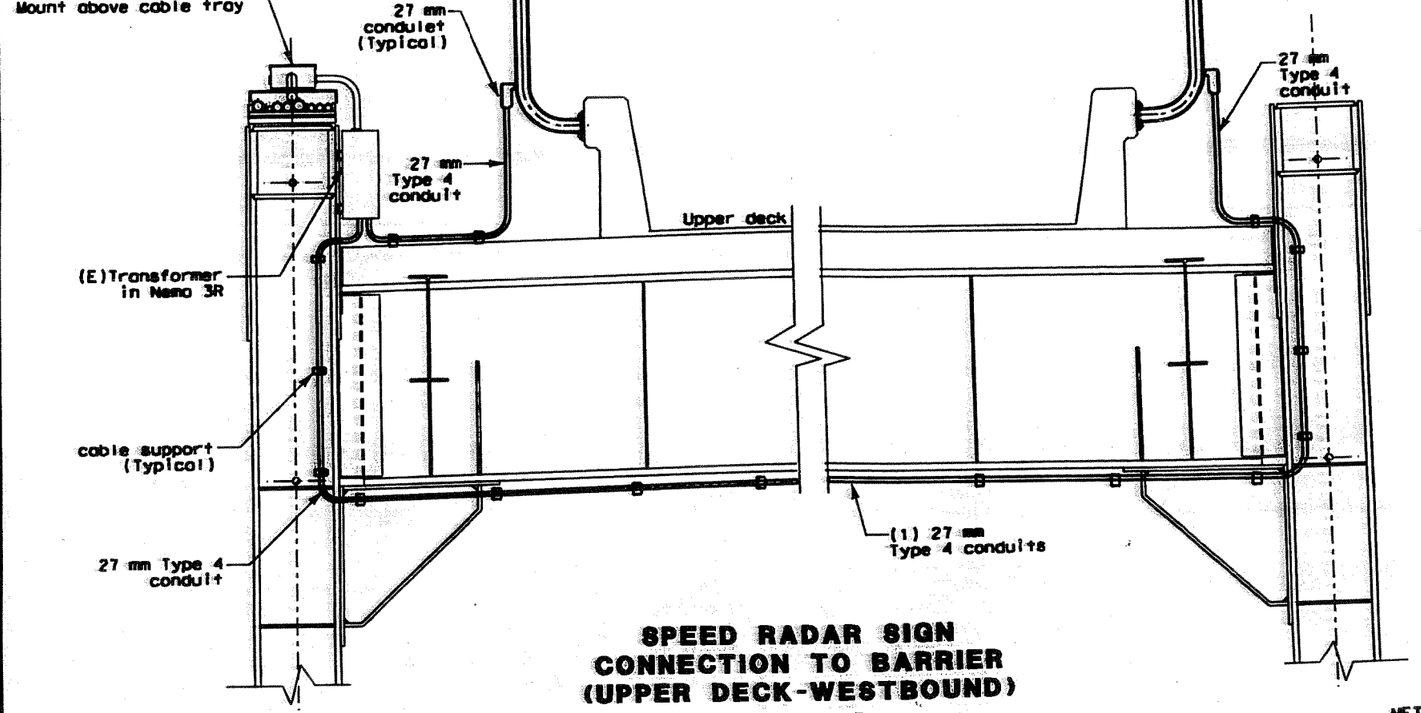

SPEED RADAR SIGN CONNECTION TO BARRIER (UPPER DECK-WESTBOUND)
SCALE: NONE

SPEED RADAR SIGN MOUNTING DETAILS TEMPORARY BYPASS STRUCTURE
SCALE: 1:20

ALL DIMENSIONS ARE IN METERS UNLESS OTHERWISE SHOWN

E-4

CALCULATED/ DESIGNED BY	DATE	REVISED BY	DATE REVISED
CHECKED BY	CL		

DESIGN OVERSIGHT

STATE OF CALIFORNIA - DEPARTMENT OF TRANSPORTATION

LAST REVISION DATE PLOTTED => 00-00-00 TIME PLOTTED => 0TIME

RELATIVE BORDER SCALE 0 20 40 60 80 USERNAME => %USER

CU 04251

BORDER LAST REVISED 10/07/2009

4120R3ueE04.dgn 11/6/2009 8:47:57 AM

Dist	COUNTY	ROUTE	KILOMETER POST TOTAL PROJECT	SHEET No.	TOTAL SHEETS
04	SF	80			

Carol Light 11/05/09
REGISTERED ELECTRICAL ENGINEER

PLANS APPROVAL DATE

REGISTERED PROFESSIONAL ENGINEER CAROL LIGHT No. 10145 Exp. 09/30/11 ELECTRICAL STATE OF CALIFORNIA

THE STATE OF CALIFORNIA OR ITS OFFICERS OR AGENTS SHALL NOT BE RESPONSIBLE FOR THE ACCURACY OR COMPLETENESS OF ELECTRONIC COPIES OF THIS PLAN SHEET.

SILVERMAN & LIGHT
1201 PARK AVENUE - SUITE 100
EMERYVILLE, CA 94608-3632

The State of California or its officers or agents shall not be responsible for the accuracy or completeness of electronic copies of this plan sheet.

Caltrans now has a web site! To get to the web site, go to http://www.dot.ca.gov

CONTRACT NO. 04-0120R4

CONTRACT CHANGE ORDER NO 235

SHEET 12 OF 23

NOTES:

1. Reference:
   - For Cable routing and sign location, see plans E-2, and E-3

SHEET NOTES:

1. In (E) transformer box, install one 15 A, 1-pole circuit breaker to feed 120 V speed radar signs.
2. Existing tb-01 is located on the north retaining wall near Bent 38.

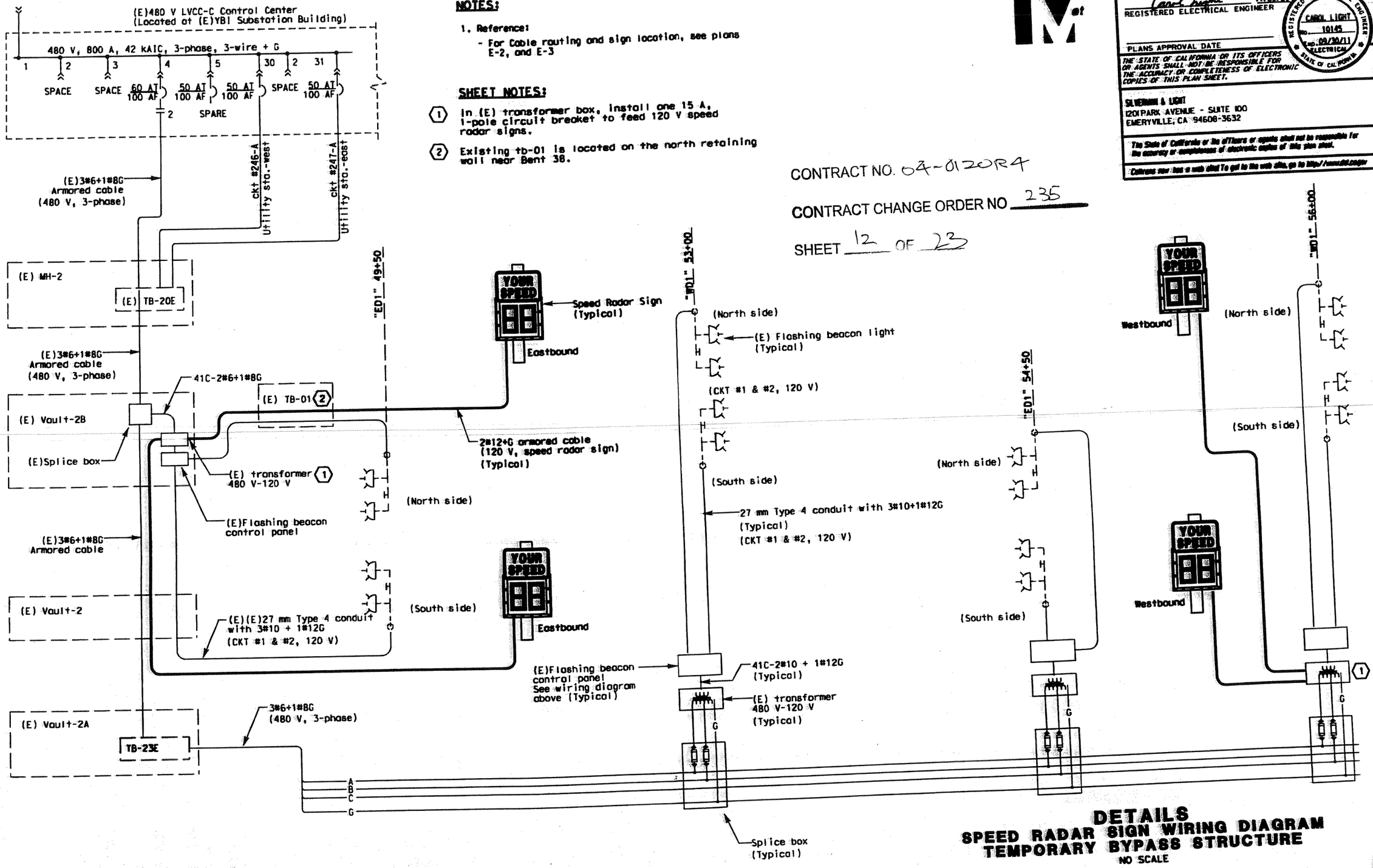

DETAILS
SPEED RADAR SIGN WIRING DIAGRAM TEMPORARY BYPASS STRUCTURE
NO SCALE

E-5

ALL DIMENSIONS ARE IN MILLIMETERS UNLESS OTHERWISE SHOWN

RELATIVE BORDER SCALE 0 20 40 60 80

USERNAME => $USER

CU 04251

EA 0120R3

STATE OF CALIFORNIA - DEPARTMENT OF TRANSPORTATION

DESIGN OVERSIGHT

CALCULATED/DESIGNED BY BJ DATE REVISED BY

CHECKED BY CL DATE REVISED

LAST REVISION 00-00-00 DATE PLOTTED => $DATE TIME PLOTTED => $TIME

BORDER LAST REVISED 10/07/2009

4120R3ucE05.dgn 11/6/2009 8:50:24 AM

Dist	COUNTY	ROUTE	KILOMETER POST TOTAL PROJECT	SHEET No.	TOTAL SHEETS
04	SF	80			

Carol Light 11/05/09
REGISTERED ELECTRICAL ENGINEER

PLANS APPROVAL DATE

REGISTERED PROFESSIONAL ENGINEER CAROL LIGHT No. 10145 Exp. 09/30/11 ELECTRICAL STATE OF CALIFORNIA

THE STATE OF CALIFORNIA OR ITS OFFICERS OR AGENTS SHALL NOT BE RESPONSIBLE FOR THE ACCURACY OR COMPLETENESS OF ELECTRONIC COPIES OF THIS PLAN SHEET.

SILVERMAN & LIGHT
1201 PARK AVENUE - SUITE 100
EMERYVILLE, CA 94608-3632

The State of California or its officers or agents shall not be responsible for the accuracy or completeness of electronic copies of this plan sheet.

Caltrans now has a web site! To get to the web site, go to http://www.dot.ca.gov

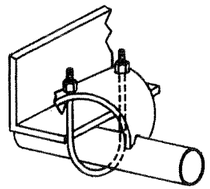

Conduit at right angles to the beam

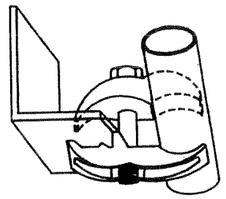

Conduit parallel to the beam

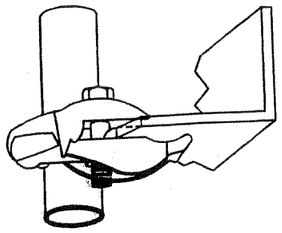

For mounting pipe or conduit vertically across beam edge

CONDUIT MOUNTING DETAILS

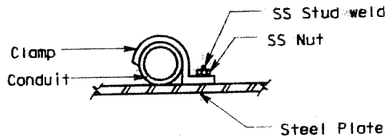

CONDUIT/CABLE MOUNTING DETAIL

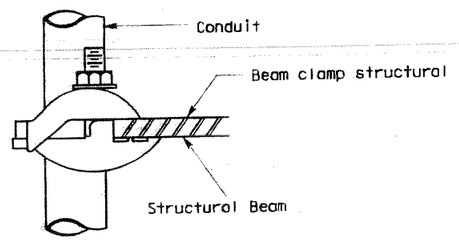

TYPICAL CONDUIT CLAMP MOUNTING

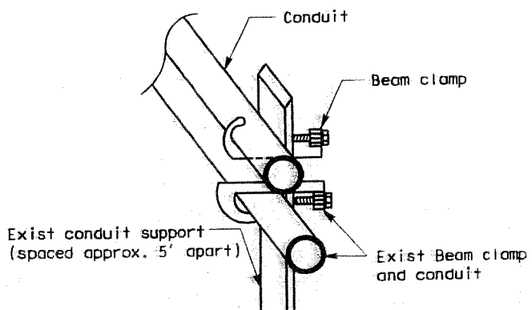

TYPICAL CONDUIT MOUNTING ON METAL STICK

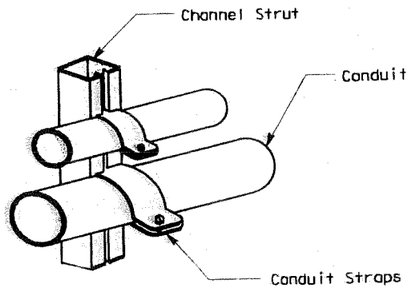

TYPICAL CONDUIT MOUNTING ON STRUT

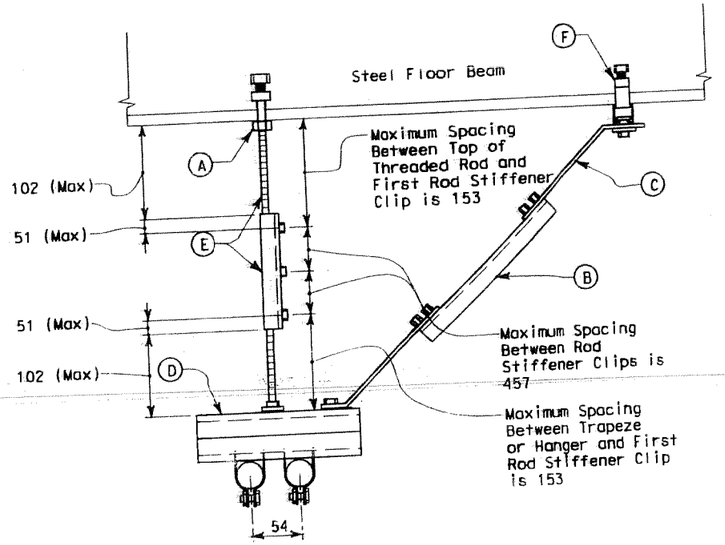

TYPICAL DETAIL

ARMORED CABLE MOUNTING DETAIL
BELOW LOWER DECK
NO SCALE

MATERIAL LIST

Item No.	Description
A	Beam C-Clamp with Locknut and Set Screw
B	Strut transverse brace for seismic support
C	Hinged seismic bracket with retaining clip
D	Strut channel, 41 mm x 82 mm
E	Threaded rod (13 mm) with stiffener & stiffener clips
F	C-Clamp with Locknut .

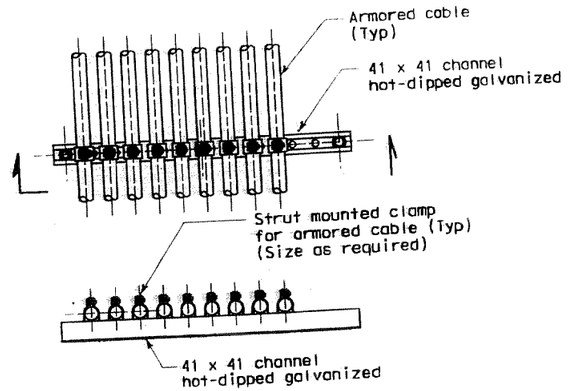

SECTION

TYPICAL DETAIL

ARMORED CABLE MOUNTING DETAIL
NO SCALE

CONTRACT NO. 04-0120R4

CONTRACT CHANGE ORDER NO 235

SHEET 13 OF 23

DETAILS
TYPICAL CONDUIT/CABLE SUPPORTS TEMPORARY BYPASS STRUCTURE
NO SCALE

E-6

STATE OF CALIFORNIA - DEPARTMENT OF TRANSPORTATION
Caltrans

CALCULATED/DESIGNED BY	DATE	REVISED BY	DATE REVISED
BJ			
CHECKED BY	CL		

DESIGN OVERSIGHT

THIS PLAN ACCURATE FOR ELECTRICAL WORK ONLY

RELATIVE BORDER SCALE IS IN MILLIMETERS 0 20 40 60 80

USERNAME => bjud
DGN FILE => C:\My projects\caltrans\2007\27000_2716-SSD Speed check sign\2716 speed sign_E06.dgn

CU 04251 EA 0120R3

LAST REVISION 00-00-00 DATE PLOTTED => 11/5/2009 TIME PLOTTED => 8:36:32 AM

BORDER LAST REVISED 10/07/2009

DIST	COUNTY	ROUTE	KILOMETER POST TOTAL PROJECT	SHEET No	TOTAL SHEETS
04	SF	80			

Carol Light 06-30-09
REGISTERED ELECTRICAL ENGINEER DATE

REGISTERED PROFESSIONAL ENGINEER CAROL LIGHT No. 10145 Exp. 09/30/09 ELECTRICAL STATE OF CALIFORNIA

PLANS APPROVAL DATE

PB Americas, Inc.
303 Second St., Suite 700N
San Francisco, CA 94107-1317

SILVERMAN & LIGHT
1201 PARK AVENUE - SUITE 100
EMERYVILLE, CA 94608-3632

The State of California or its officers or agents shall not be responsible for the accuracy or completeness of electronic copies of this plan sheet.

Caltrans now has a web site! To get to the web site, go to http://www.dot.ca.gov

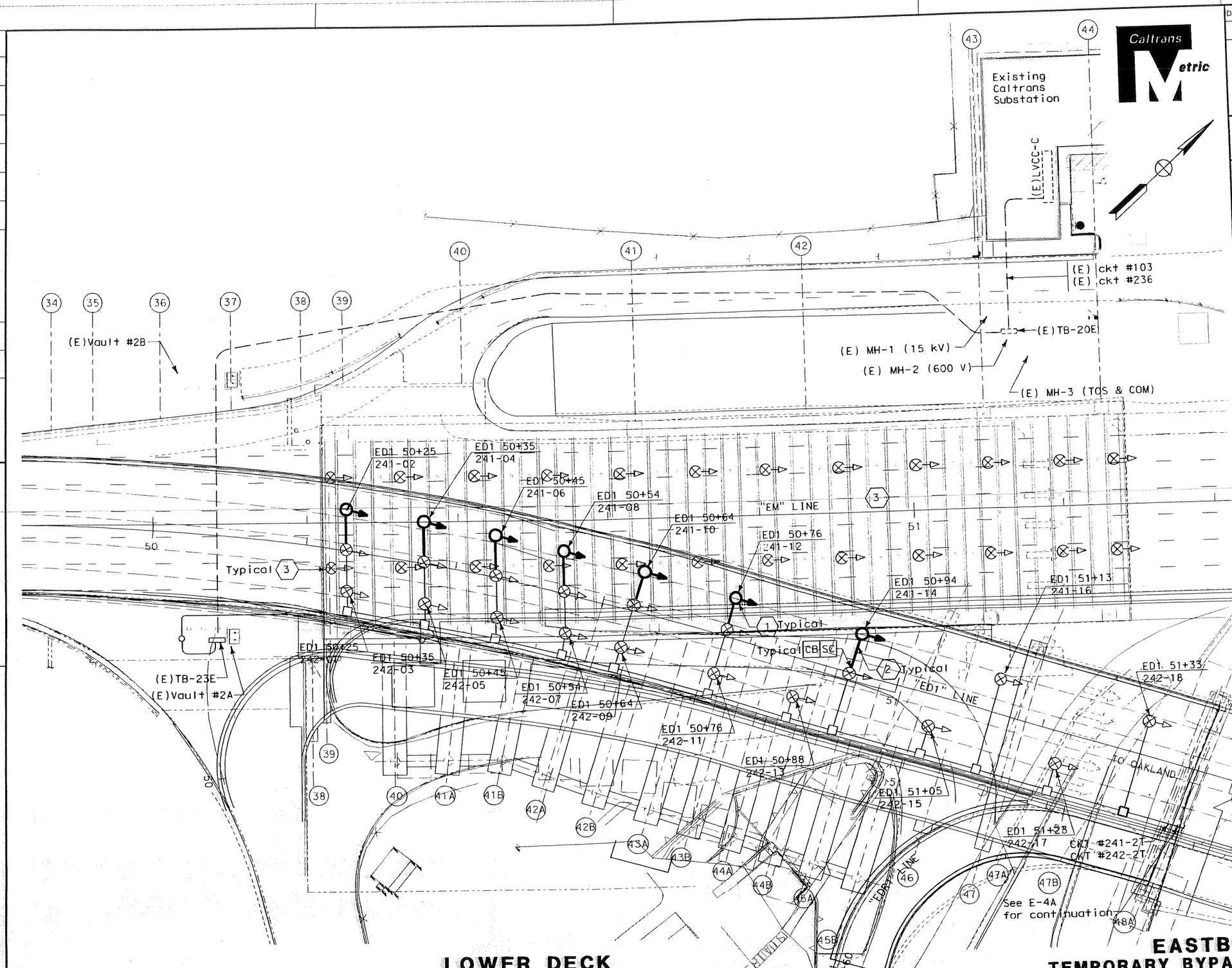

LOWER DECK

SHEET NOTES:

1. Install new type III soffit fixture "HOLOPHANE TFP series luminaire" with 175 watts MH, 480 V, double fusing and with provision of special bracket. Mount fixture on concrete structure of westbound deck between bent caps.
2. Install 21C type 4 conduit with 2#12 and 1#12G (CKT #241). Provide conduit support every 1.5 meter.
3. Disconnect all (E) soffit lighting fixtures on permanent viaduct between bent #38 thru 48.

CONTRACT NO. 04-0120R4

CONTRACT CHANGE ORDER NO 235

SHEET 14 OF 23

EASTBOUND LIGHTING
TEMPORARY BYPASS STRUCTURE-WEST TIE IN

SCALE: 1:250

ALL DIMENSIONS ARE IN METERS UNLESS OTHERWISE SHOWN

E-4R4A

THIS PLAN ACCURATE FOR ELECTRICAL WORK ONLY

FOR REDUCED PLANS ORIGINAL 0 20 40 60 80

DGN FILE => C:\My projects\caltrans\2007\27000-2702_SSD-west tie in phase-2\WTI2-E04R4_CCO.dgn
USERNAME => bjud
CU 04251
EA 0120R3

STATE OF CALIFORNIA - DEPARTMENT OF TRANSPORTATION
Caltrans

DESIGN OVERSIGHT

CALCULATED/DESIGNED BY BJ DATE
CHECKED BY CL
REVISED BY
DATE REVISED

LAST REVISION 00-00-00
DATE PLOTTED => 11/13/2009
TIME PLOTTED => 8:32:10 AM

DIST	COUNTY	ROUTE	POST MILES TOTAL PROJECT	SHEET No	TOTAL SHEETS
04	SF	80	12.6/13.2	----	----

K. C. Lin
REGISTERED CIVIL ENGINEER DATE

PLANS APPROVAL DATE

REGISTERED PROFESSIONAL ENGINEER — K. C. LIU — No. C 50291 — Exp. 6-30-11 — CIVIL — STATE OF CALIFORNIA

The State of California or its officers or agents shall not be responsible for the accuracy or completeness of electronic copies of this plan sheet.

To get to the Caltrans web site, go to: http://www.dot.ca.gov

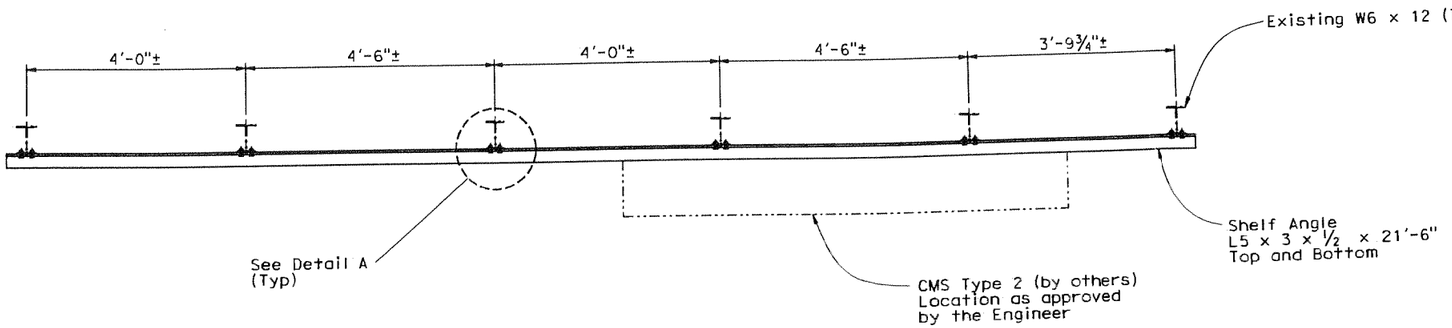

PLAN

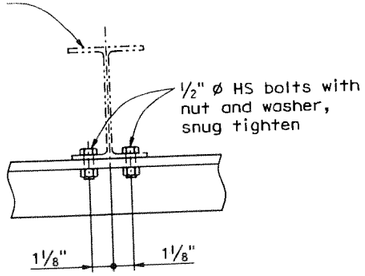

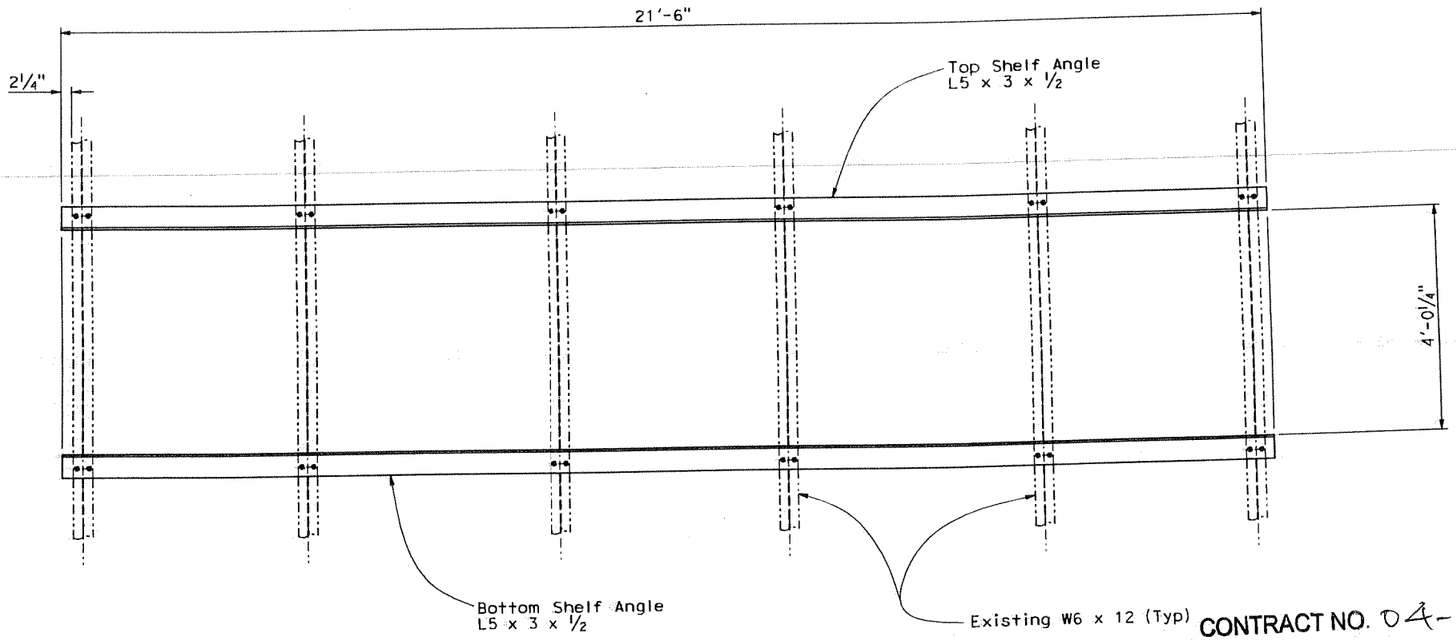

ELEVATION

DETAIL A

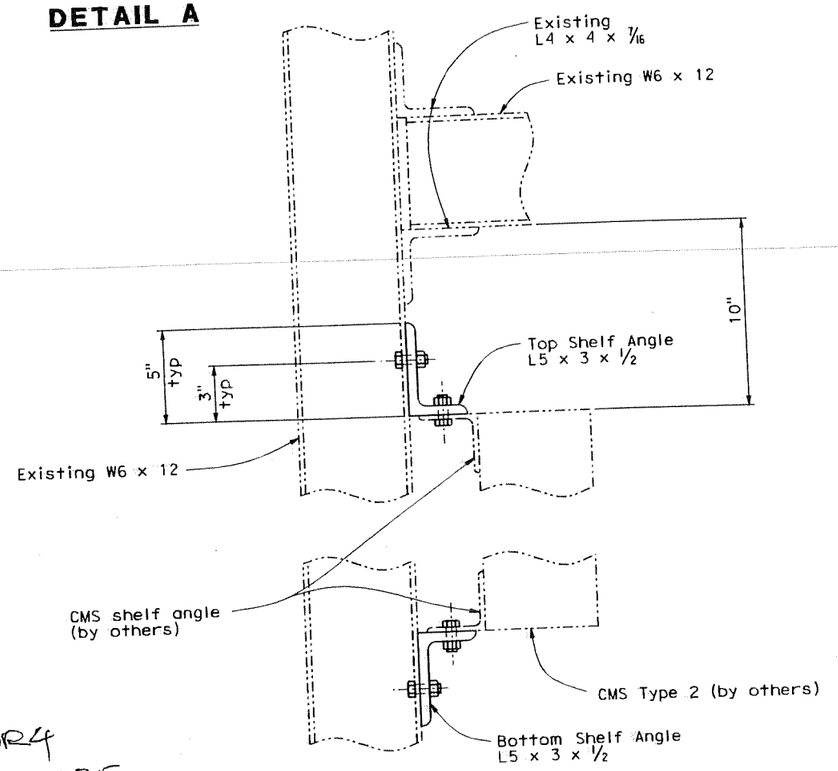

TYPICAL SECTION

CONTRACT NO. 04-0120R4

CONTRACT CHANGE ORDER NO 235

SHEET 15 OF 23

NOTE:
THE CONTRACTOR SHALL VERIFY ALL CONTROLLING FIELD DIMENSIONS BEFORE ORDERING OR FABRICATING ANY MATERIAL.

No Scale

BRANCH CHIEF Jeffrey S Woody

	BY	CHECKED
DESIGN	K.C. LIU	ELISEO LOPEZ
DETAILS	D W JUSTICE Jr	K.C. LIU
QUANTITIES	K.C. LIU	ELISEO LOPEZ

STATE OF CALIFORNIA
DEPARTMENT OF TRANSPORTATION

DIVISION OF ENGINEERING SERVICES
DESIGN AND TECHNICAL SERVICES
SPECIAL DESIGNS BRANCH A

BRIDGE NO. —
POST MILE —

CU 04251
EA 0120R1

SFOBB
UPPER DECK TRUSS MOUNTED SIGN

SD-1

DISREGARD PRINTS BEARING EARLIER REVISION DATES

REVISION DATES							SHEET	OF
11-18-09	11-30-09	12-1-09					—	—

ORIGINAL SCALE IN INCHES FOR REDUCED PLANS 0 1 2 3

(ENGLISH) SPECIAL DESIGNS BRANCH BORDER SHEET (REV. 7-1-09)

FILE => spec_des_br_prj/2009sd/04-0120R1/$REQUEST

USERNAME => $USER DATE PLOTTED => $DATE TIME PLOTTED => $TIME

DIST	COUNTY	ROUTE	KILOMETER POST TOTAL PROJECT	SHEET NO	TOTAL SHEETS
04	SF	80	12.6/13.2		

REGISTERED CIVIL ENGINEER

PLANS APPROVAL DATE

REGISTERED PROFESSIONAL ENGINEER — NO. — END. — CIVIL — STATE OF CALIFORNIA

The State of California or its officers or agents shall not be responsible for the accuracy or completeness of electronic copies of this plan sheet.

Caltrans now has a web site! To get to the web site, go to: http://www.dot.ca.gov

Metric

DATE	REVISED BY	DATE REVISED

CALCULATED/ DESIGNED BY

CHECKED BY

STATE OF CALIFORNIA - DEPARTMENT OF TRANSPORTATION

Caltrans

NOTES:

1) Plan sheets PD-8A through PD-8H complement plan sheets PD-1 through PD-8.

2) Exact locations of the signs and limits of striping to be determined by the Engineer.

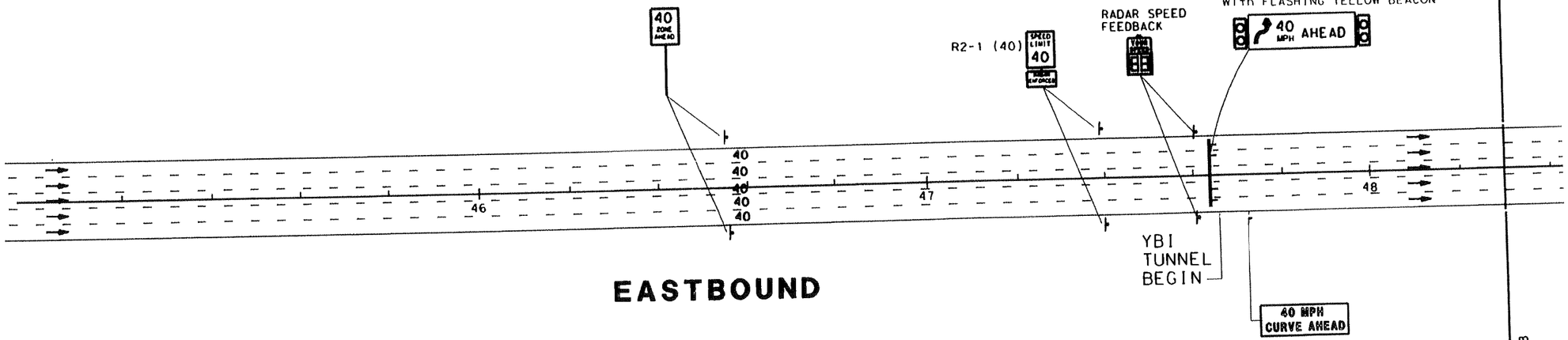

EASTBOUND

REGISTERED PROFESSIONAL ENGINEER — ALEC MELKONIANS — CO53452 — Exp. 6/30/11 — CIVIL — STATE OF CALIFORNIA

CONTRACT NO.

CONTRACT CHANGE ORDER NO 235

SHEET 16 OF 23

ALL DIMENSIONS ARE IN METERS UNLESS OTHERWISE SHOWN

PD - 8A

LAST REVISION 00-00-00 DATE PLOTTED =>>DATE TIME PLOTTED =>>TIME

RELATIVE BORDER SCALE IS IN MILLIMETERS 0 20 40 60 80

DGN FILE =>$REQUEST
USERNAME =>$USER

CU

EA

DIST	COUNTY	ROUTE	KILOMETER POST TOTAL PROJECT	SHEET NO	TOTAL SHEETS
04	SF	80	12.6/13.2		

REGISTERED CIVIL ENGINEER

PLANS APPROVAL DATE

The State of California or its officers or agents shall not be responsible for the accuracy or completeness of electronic copies of this plan sheet.

Caltrans now has a web site! To get to the web site, go to: http://www.dot.ca.gov

CONTRACT NO.

CONTRACT CHANGE ORDER NO 235

SHEET 17 OF 23

DATE	REVISED BY
	DATE REVISED

CALCULATED/ DESIGNED BY

CHECKED BY

STATE OF CALIFORNIA - DEPARTMENT OF TRANSPORTATION

Caltrans

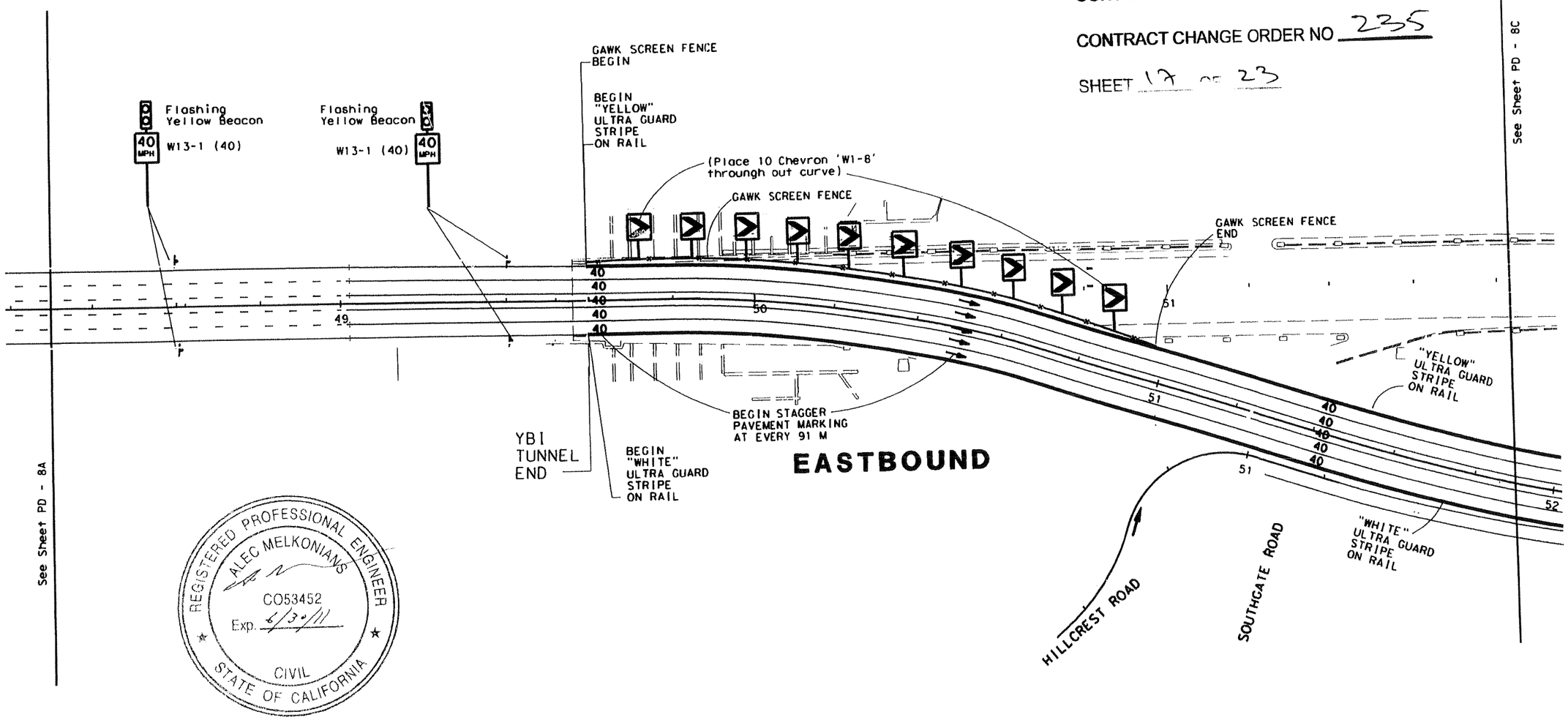

REGISTERED PROFESSIONAL ENGINEER
ALEC MELKONIANS
CO53452
Exp. 6/30/11
CIVIL
STATE OF CALIFORNIA

ALL DIMENSIONS ARE IN METERS UNLESS OTHERWISE SHOWN

PD - 8B

LAST REVISION 00-00-00
DATE PLOTTED => &DATE
TIME PLOTTED => &TIME

RELATIVE BORDER SCALE IS IN MILLIMETERS 0 20 40 60 80

DGN FILE => &REQUEST
USERNAME => &USER

CU

EA

DIST	COUNTY	ROUTE	KILOMETER POST TOTAL PROJECT	SHEET NO	TOTAL SHEETS
04	SF	80	12.6/13.2		

REGISTERED CIVIL ENGINEER

PLANS APPROVAL DATE

The State of California or its officers or agents shall not be responsible for the accuracy or completeness of electronic copies of this plan sheet.

Caltrans now has a web site! To get to the web site, go to: http://www.dot.ca.gov

REGISTERED PROFESSIONAL ENGINEER
ALEC MELKONIANS
CO53452
Exp. 6/30/11
CIVIL
STATE OF CALIFORNIA

CONTRACT NO.

CONTRACT CHANGE ORDER NO 235

SHEET 18 OF 23

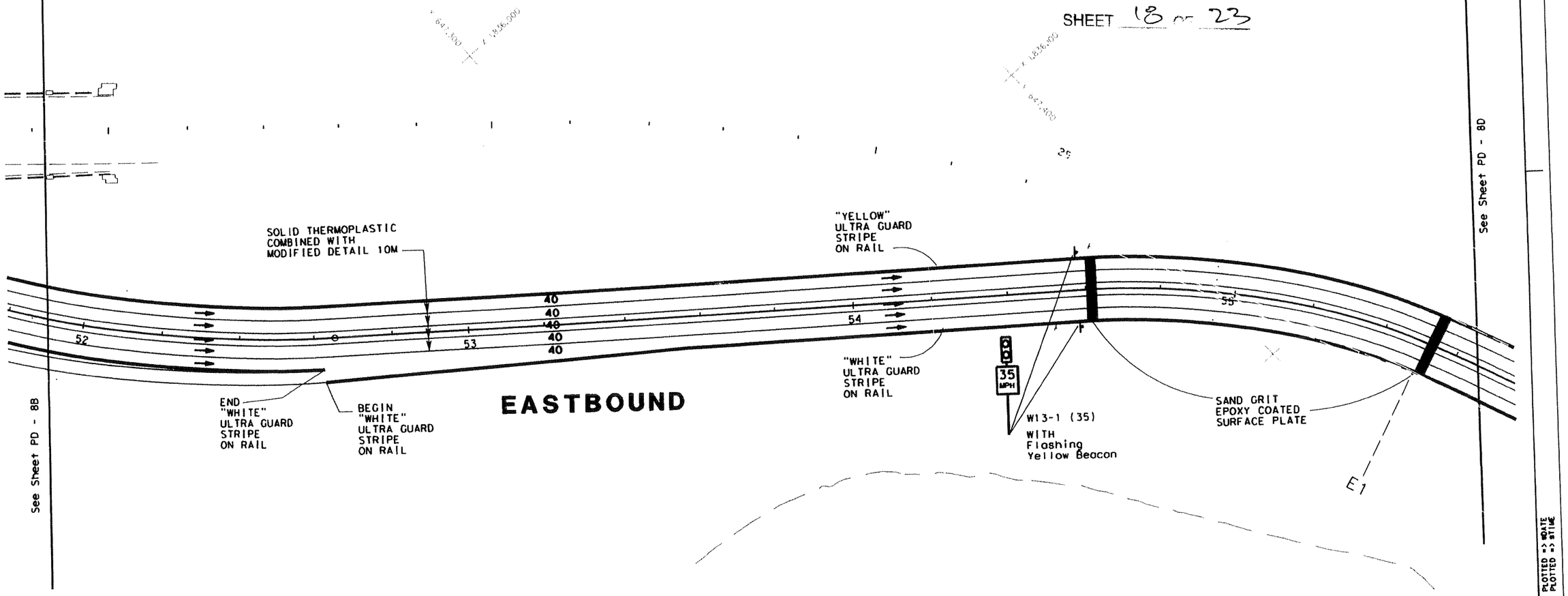

ALL DIMENSIONS ARE IN METERS UNLESS OTHERWISE SHOWN

PD - 8C

STATE OF CALIFORNIA - DEPARTMENT OF TRANSPORTATION

Caltrans

DATE	REVISED BY	DATE REVISED
CALCULATED/ DESIGNED BY	CHECKED BY	

LAST REVISION 00-00-00 DATE PLOTTED => $DATE TIME PLOTTED => $TIME

RELATIVE BORDER SCALE IS IN MILLIMETERS 0 20 40 60 80

DGN FILE => $REQUEST USERNAME => $USER

CU

EA

DIST	COUNTY	ROUTE	KILOMETER POST TOTAL PROJECT	SHEET NO.	TOTAL SHEETS
04	SF	80	12.6/13.2		

REGISTERED CIVIL ENGINEER

PLANS APPROVAL DATE

The State of California or its officers or agents shall not be responsible for the accuracy or completeness of electronic copies of this plan sheet.

Caltrans now has a web site! To get to the web site, go to: http://www.dot.ca.gov

REGISTERED PROFESSIONAL ENGINEER
ALEC MELKONIANS
C053452
Exp. 6/30/11
CIVIL
STATE OF CALIFORNIA

CONTRACT NO.

CONTRACT CHANGE ORDER NO 235

SHEET 19 OF 23

DATE	REVISED BY	DATE REVISED

CALCULATED/ DESIGNED BY

CHECKED BY

STATE OF CALIFORNIA - DEPARTMENT OF TRANSPORTATION

Caltrans

EASTBOUND

See Sheet PD - 8C

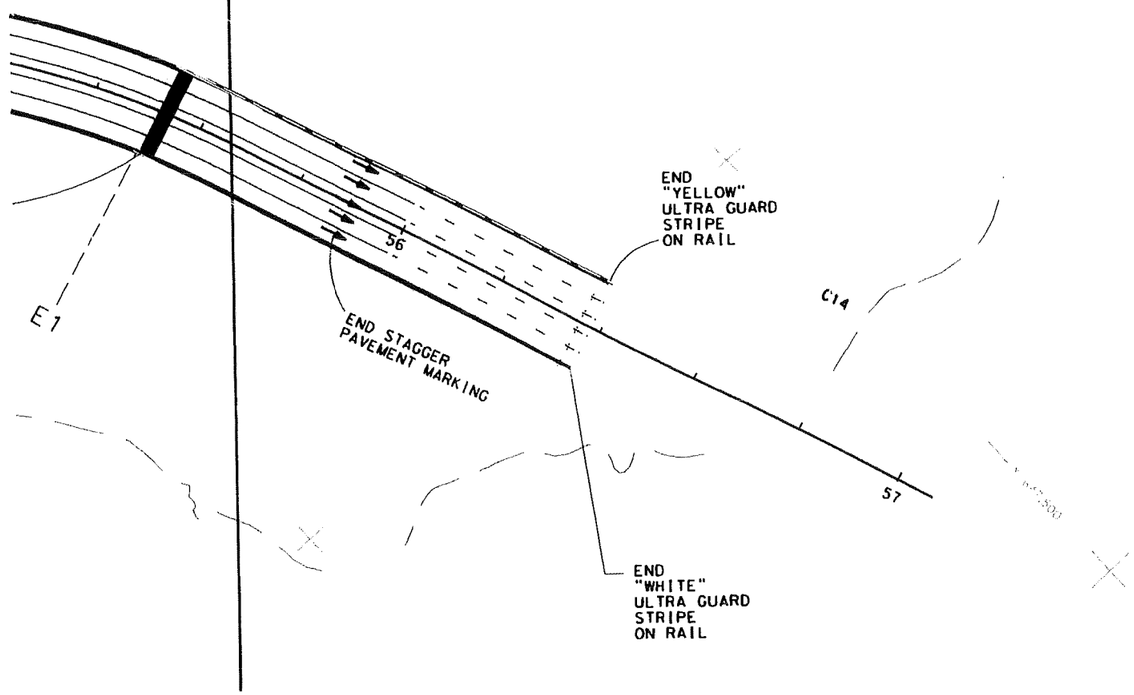

ALL DIMENSIONS ARE IN METERS UNLESS OTHERWISE SHOWN

PD - 8D

LAST REVISION 00-00-00
DATE PLOTTED => >>DATE
TIME PLOTTED => >>TIME

RELATIVE BORDER SCALE IS IN MILLIMETERS 0 20 40 60 80

DGN FILE => >>REQUEST
USERNAME => >>USER

CU

EA

10/7/2009 12:51:59 PM

DIST	COUNTY	ROUTE	KILOMETER POST TOTAL PROJECT	SHEET NO.	TOTAL SHEETS
04	SF	80	12.6/13.2		

REGISTERED CIVIL ENGINEER

PLANS APPROVAL DATE

The State of California or its officers or agents shall not be responsible for the accuracy or completeness of electronic copies of this plan sheet.

Caltrans now has a web site! To get to the web site, go to: http://www.dot.ca.gov

REGISTERED PROFESSIONAL ENGINEER — ALEC MELKONIANS — C053452 Exp. 6/30/11 — CIVIL — STATE OF CALIFORNIA

CONTRACT NO.

CONTRACT CHANGE ORDER NO 235

SHEET 20 OF 23

DATE	REVISED BY	DATE REVISED

CALCULATED/ DESIGNED BY

CHECKED BY

STATE OF CALIFORNIA - DEPARTMENT OF TRANSPORTATION

Caltrans

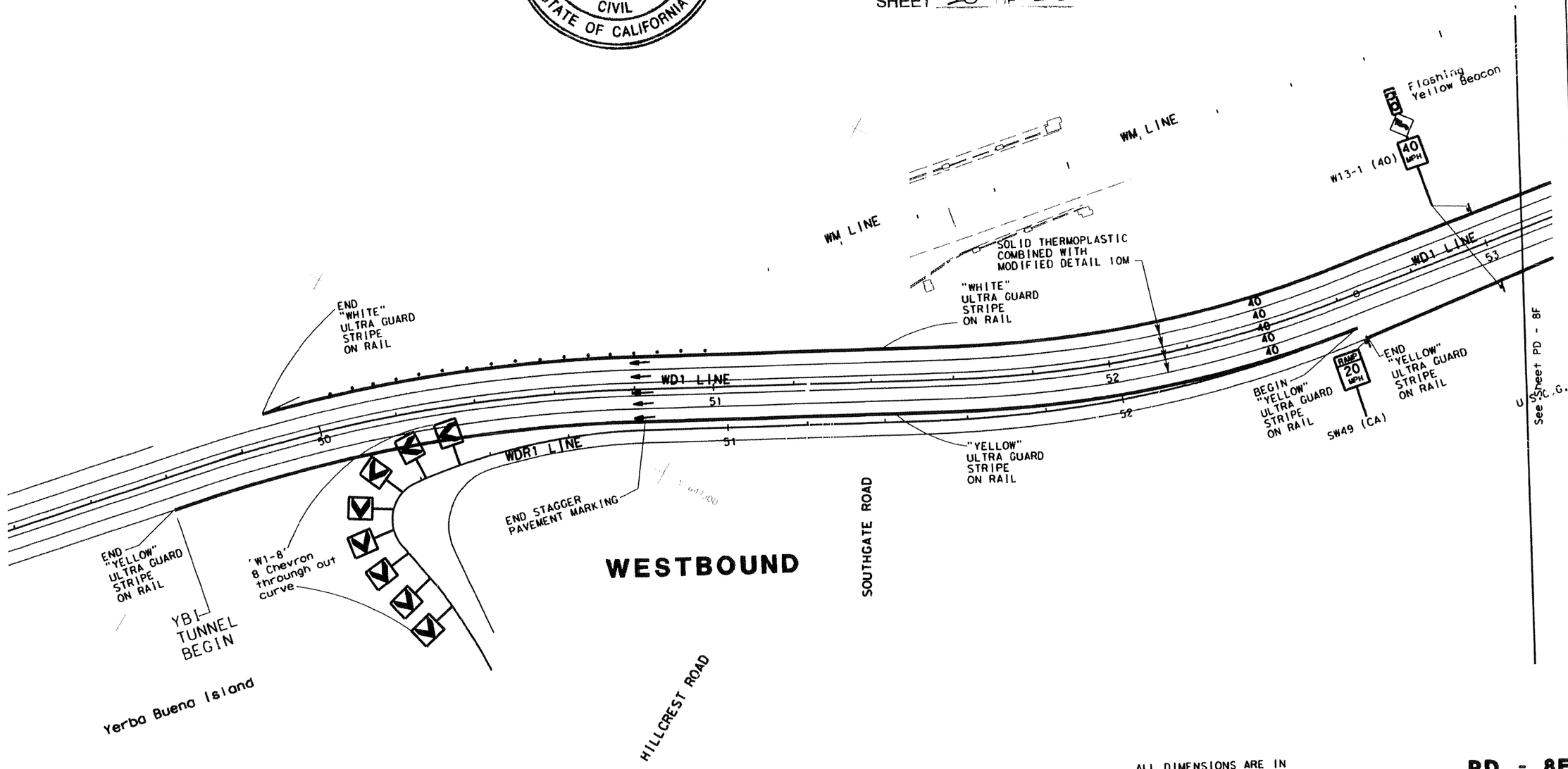

ALL DIMENSIONS ARE IN METERS UNLESS OTHERWISE SHOWN

PD - 8E

LAST REVISION 00-00-00

DATE PLOTTED => #DATE
TIME PLOTTED => #TIME

RELATIVE BORDER SCALE IS IN MILLIMETERS 0 20 40 60 80

DGN FILE => #REQUEST
USERNAME => #USER

CU

EA

DIST	COUNTY	ROUTE	KILOMETER POST TOTAL PROJECT	SHEET NO	TOTAL SHEETS
04	SF	80	12.6/13.2		

REGISTERED CIVIL ENGINEER

PLANS APPROVAL DATE

The State of California or its officers or agents shall not be responsible for the accuracy or completeness of electronic copies of this plan sheet.

Caltrans now has a web site! To get to the web site, go to: http://www.dot.ca.gov

REGISTERED PROFESSIONAL ENGINEER
ALEC MELKONIANS
C053452
Exp. 6/30/11
CIVIL
STATE OF CALIFORNIA

DATE	REVISED BY	DATE REVISED

CALCULATED/ DESIGNED BY

CHECKED BY

STATE OF CALIFORNIA - DEPARTMENT OF TRANSPORTATION

Caltrans

To Be Installed in December, 2009
Exact CMS Message To Be Determined
By the Engineer.

35 MPH
CURVE AHEAD
Overhead CMS

Flashing
Yellow Beacon
W13-1 (35)

35 MPH

Place 10 Chevron 'W1-8'
throughout curve

"WHITE"
ULTRA GUARD
STRIPE
ON RAIL

60 M

BEGIN
"WHITE"
ULTRA GUARD
STRIPE
ON RAIL

Flashing
Yellow Beacon
W13-1 (35)

35 MPH

55

56

57

SAND GRIT
EPOXY COATED
SURFACE PLATE

61 M

46 M

SPEED LIMIT 40

R2-1 (40)

54

53

"YELLOW"
ULTRA GUARD
STRIPE
ON RAIL

E1

BEGIN
"YELLOW"
ULTRA GUARD
STRIPE
ON RAIL

155 M

E2

See Sheet PD - 8E

See Sheet PD- 8G

WESTBOUND

CONTRACT NO.

CONTRACT CHANGE ORDER NO 235

SHEET 21 OF 23

ALL DIMENSIONS ARE IN
METERS UNLESS OTHERWISE SHOWN

PD - 8F

LAST REVISION	DATE PLOTTED => #DATE
00-00-00	TIME PLOTTED => #TIME

RELATIVE BORDER SCALE
IS IN MILLIMETERS
0 20 40 60 80

DGN FILE => #REQUEST
USERNAME => #USER

CU

EA

DIST	COUNTY	ROUTE	KILOMETER POST TOTAL PROJECT	SHEET NO	TOTAL SHEETS
04	SF	80	12.6/13.2		

REGISTERED CIVIL ENGINEER

PLANS APPROVAL DATE

The State of California or its officers or agents shall not be responsible for the accuracy or completeness of electronic copies of this plan sheet.

Caltrans now has a web site! To get to the web site, go to: http://www.dot.ca.gov

REGISTERED PROFESSIONAL ENGINEER
ALEC MELKONIANS
C053452
Exp. 6/30/11
CIVIL
STATE OF CALIFORNIA

CONTRACT NO.

CONTRACT CHANGE ORDER NO 235

SHEET 22 OF 23

DATE	REVISED BY
	DATE REVISED

CALCULATED/DESIGNED BY

CHECKED BY

STATE OF CALIFORNIA - DEPARTMENT OF TRANSPORTATION

Caltrans

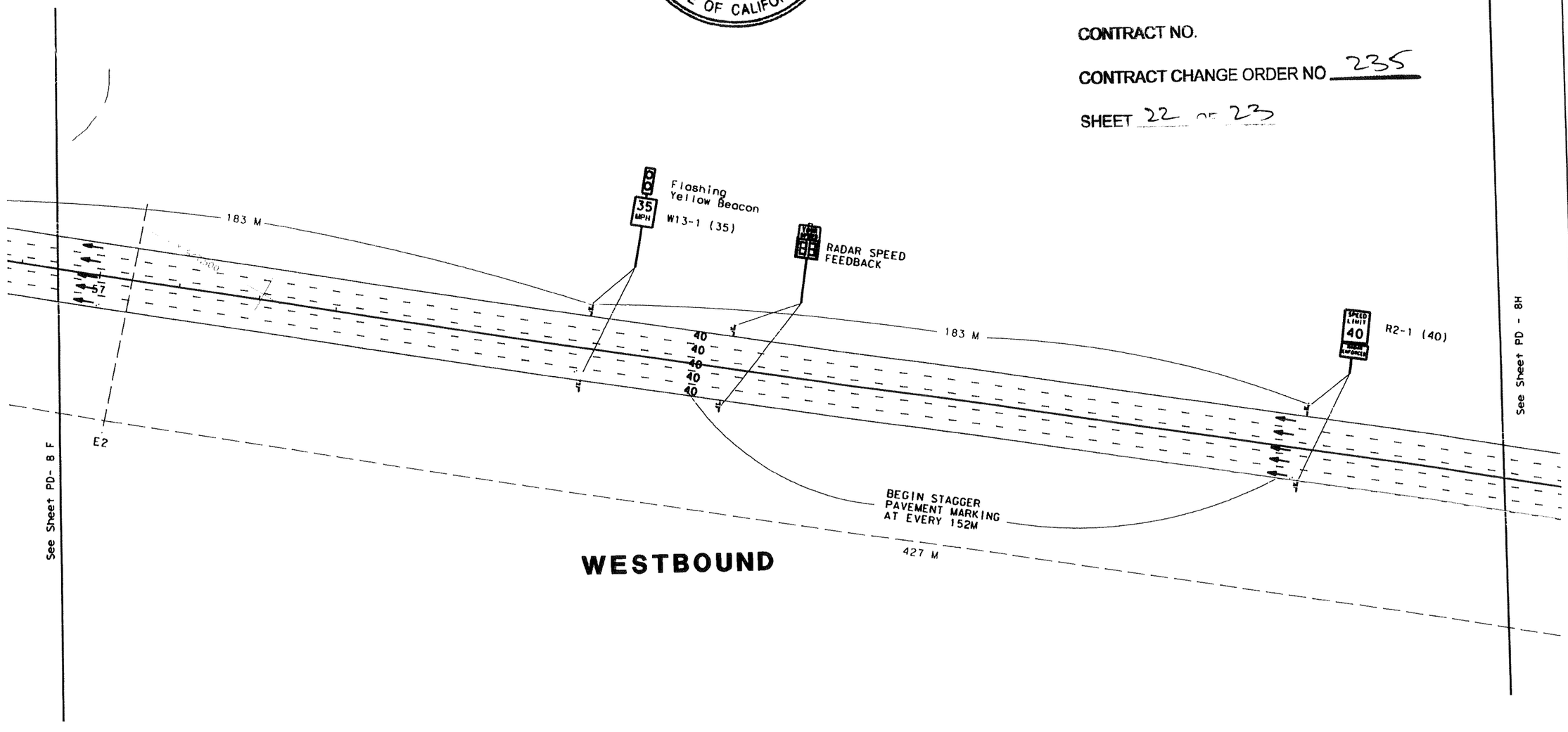

ALL DIMENSIONS ARE IN METERS UNLESS OTHERWISE SHOWN

PD - 8G

LAST REVISION 00-00-00 | DATE PLOTTED => &DATE | TIME PLOTTED => &TIME

RELATIVE BORDER SCALE IS IN MILLIMETERS 0 20 40 60 80

DGN FILE => &REQUEST
USERNAME => &USER

CU

EA

40120rp01R1 SCurve 2.dgn 12/7/2009 11:21:29 AM

DIST	COUNTY	ROUTE	KILOMETER POST TOTAL PROJECT	SHEET No	TOTAL SHEETS
04	SF	80	12.6/13.2		

REGISTERED CIVIL ENGINEER

PLANS APPROVAL DATE

The State of California or its officers or agents shall not be responsible for the accuracy or completeness of electronic copies of this plan sheet.

Caltrans now has a web site! To get to the web site, go to: http://www.dot.ca.gov

REGISTERED PROFESSIONAL ENGINEER
ALEC MELKONIANS
CO53452
Exp. 6/30/11
CIVIL
STATE OF CALIFORNIA

CONTRACT NO.

CONTRACT CHANGE ORDER NO 235

SHEET 23 OF 23

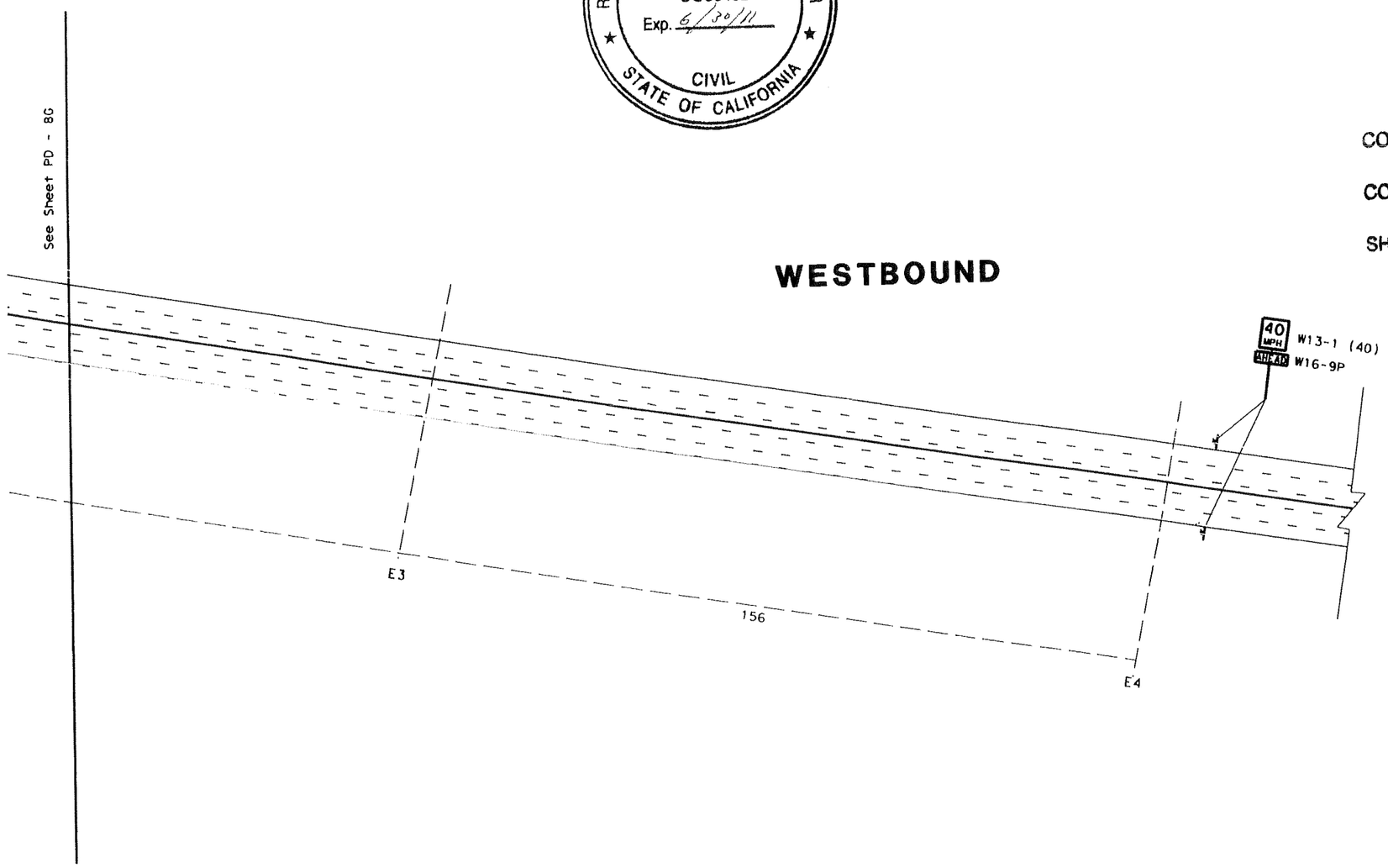

ALL DIMENSIONS ARE IN METERS UNLESS OTHERWISE SHOWN

PD - 8H

STATE OF CALIFORNIA - DEPARTMENT OF TRANSPORTATION

Caltrans

CALCULATED/ DESIGNED BY	DATE	REVISED BY
CHECKED BY		DATE REVISED

RELATIVE BORDER SCALE IS IN MILLIMETERS 0 20 40 60 80

DGN FILE => $REQUEST
USERNAME => $USER

CU

EA

LAST REVISION 00-00-00

DATE PLOTTED => $DATE
TIME PLOTTED => $TIME

40120rn01R1 SCurve 2.dgn 12/7/2009 11:12:01 AM

STATE OF CALIFORNIA - DEPARTMENT OF TRANSPORTATION

CONTRACT CHANGE ORDER MEMORANDUM

TO: MIKE FORNER / DEANNA VILCHECK	FILE: **E.A.** 04 - 0120R4
	CO-RTE-PM SF-80-12.6/13.2
FROM: BILL CASEY	**FED. NO.**
CCO#: **235** SUPPLEMENT#: **0** Category Code: **CKXX**	CONTINGENCY BALANCE (incl. this change) **$44,159,346.59**
COST: **$300,000.00** INCREASE ☑ DECREASE ☐	HEADQUARTERS APPROVAL REQUIRED? ☑ YES ☐ NO
SUPPLEMENTAL FUNDS PROVIDED: **$0.00**	IS THIS REQUEST IN ACCORDANCE WITH ENVIRONMENTAL DOCUMENTS? ☑ YES ☐ NO
CCO DESCRIPTION: Traffic Improvements to Mainline Detour	**PROJECT DESCRIPTION:** CONSTRUCT ROUTE 80 TEMP BYPASS STRUCTURE

Original Contract Time:	Time Adj. This Change:	Previously Approved CCO Time Adjustments:	Percentage Time Adjusted: (including this change)	Total # of Unreconciled Deferred Time CCO(s): (including this change)
475 Day(s)	**0** Day(s)	**0** Day(s)	**0** %	**0**

THIS CHANGE ORDER PROVIDES FOR:

Providing for numerous traffic enhancements on the mainline detour.

This project provides for the construction of a detour of the mainline eastbound and westbound I-80 traffic that will allow for the tie in of the new east span of the San Francisco Oakland Bay Bridge to Yerba Buena Island. The detour, which spans approximately 650 meters, is comprised of a double deck steel truss bridge which transitions to a concrete and roadway structure as it approaches the Yerba Buena Island tunnel.

Two separate Department strategy memorandums, dated December 14, 2006 and December 25, 2006, approved by Tony Anziano - Toll Bridge Program Manager and Richard Land - Chief Engineer, recommended that the Department assume responsibility for the designs of the East Tie-In (ETI) and West Tie-In (WTI) portions of this contract, and incorporated seismic retrofit work of the permanent Yerba Buena Island Transition Structure (YBITS) onto this project. The approval of these strategy memorandums extended the project completion date approximately 5 years.

The detour opened to traffic on September 8, 2009. Project Development has now begun issuing changes to enhance the safety of the detour to public traffic. Changes now being issued include the addition of radar warning signs, additional pavement delineation, additional advisory and warning signing and additional lighting. The change order also provides for the contractor to furnish and install mounting brackets for a planned changeable message sign. This change order shall provide for these traffic improvements.

The cost associated with this work shall be compensated as extra work at force account at an estimated cost of $300,000.00 which shall be financed from the contract's contingency funds.

No adjustment of contract time is warranted as the work will not affect the controlling operation.

This change was requested by Alec Melkonians - Asst. Project Manager per Memorandum dated November 6, 2009 and concurred with by Minh B. Nguyen - Project Engineer and Lina Ellis - Maintenance. Authorization to Proceed with this work was issued by Headquarters Construction on November 24, 2009.

ADA Notice: For individuals with sensory disabilities, this document is available in alternate formats. For information call: (916) 654-6410 or TDD (916) 654-3880 or write Records and Forms Management, 1120 N Street, MS-89, Sacramento, CA 95814.

CONCURRED BY:		
Construction Engineer:	Jeannie Balderramos JB	Date 1/7/10
Bridge Engineer:		Date
Project Engineer:	Minh B. Nguyen, PE	Date 1/7/10
Project Manager:	Alec Melkonians	Date 11/6/09
FHWA Rep.:		Date
Environmental:		Date
Other (specify):	Lina Ellis - MAINTENANCE	Date 1/7/10
Other (specify):		Date
District Prior Approval By:	CARRY SALHANEN	Date
HQ (Issue Approve) By:	~~Bob Molera~~, HQ CCO Engineer	Date 1/19/10
Resident Engineer's Signature:		Date 1-7-10

ESTIMATE OF COST

	THIS REQUEST	TOTAL TO DATE
ITEMS	$0.00	$0.00
FORCE ACCOUNT	$300,000.00	$300,000.00
AGREED PRICE	$0.00	$0.00
ADJUSTMENT	$0.00	$0.00
TOTAL	$300,000.00	$300,000.00

FEDERAL PARTICIPATION

☐ PARTICIPATING ☐ PARTICIPATING IN PART ☑ NONE
☐ NON-PARTICIPATING (MAINTENANCE) ☐ NON-PARTICIPATING

FEDERAL SEGREGATION (if more than one Funding Source or P.I.P. type)
☐ CCO FUNDED PER CONTRACT ☐ CCO FUNDED AS FOLLOWS

FEDERAL FUNDING SOURCE	PERCENT

ADA Notice: For individuals with sensory disabilities, this document is available in alternate formats. For information call: (916) 654-6410 or TDD (916) 654-3880 or write Records and Forms Management, 1120 N Street, MS-89, Sacramento, CA 95814.

CONTRACT CHANGE ORDER

Change Requested by: Engineer

CCO: 235	Suppl. No. 1	Contract No. 04 - 0120R4	Road SF-80-12.6/13.2	FED. AID LOC.:

To: **CC MYERS INC**

You are directed to make the following changes from the plans and specifications or do the following described work not included in the plans and specifications for this contract. ***NOTE: This change order is not effective until approved by the Engineer.***

Description of work to be done, estimate of quantities and prices to be paid. (Segregate between additional work at contract price, agreed price and force account.) Unless otherwise stated, rates for rental of equipment cover only such time as equipment is actually used and no allowance will be made for idle time. This last percentage shown is the net accumulated increase or decrease from the original quantity in the Engineer's Estimate.

Extra Work at Force Account:

Furnish and install mounting hardware and install flashing beacon assemblies as shown on Sheets 2 through 3 of this change order and as determined by the Engineer.

Furnish and install modified chain link railing (Type 7) and mounting hardware on the WD1 Line as shown on Sheets No. 4 through 12 of this change order and as determined by the Engineer.

Estimated cost of Extra Work at Force Account $200,000.00

Estimated Cost: **Increase** ☑ **Decrease** ☐ **$200,000.00**

By reason of this order the time of completion will be adjusted as follows: 0 days

Submitted by

Signature	Resident Engineer	Date
Leonnie Balderramos	JEANNIE BALDERRAMOS	3-8-10

Approval Recommended by

Signature	Area Construction Manager	Date
Deanna Vilcheck	DEANNA VILCHECK	3/9/10

Engineer Approval by

Signature	Area Construction Manager	Date
Deanna Vilcheck	DEANNA VILCHECK	3/22/10

We the undersigned contractor, have given careful consideration to the change proposed and agree, if this proposal is approved, that we will provide all equipment, furnish the materials, except as may otherwise be noted above, and perform all services necessary for the work above specified, and will accept as full payment therefor the prices shown above.

NOTE: If you, the contractor, do not sign acceptance of this order, your attention is directed to the requirements of the specifications as to proceeding with the ordered work and filing a written protest within the time therein specified.

Contractor Acceptance by

Signature	(Print name and title)	Date
[signature]	DANIEL E. HANICK, PRESIDENT	3/18/10

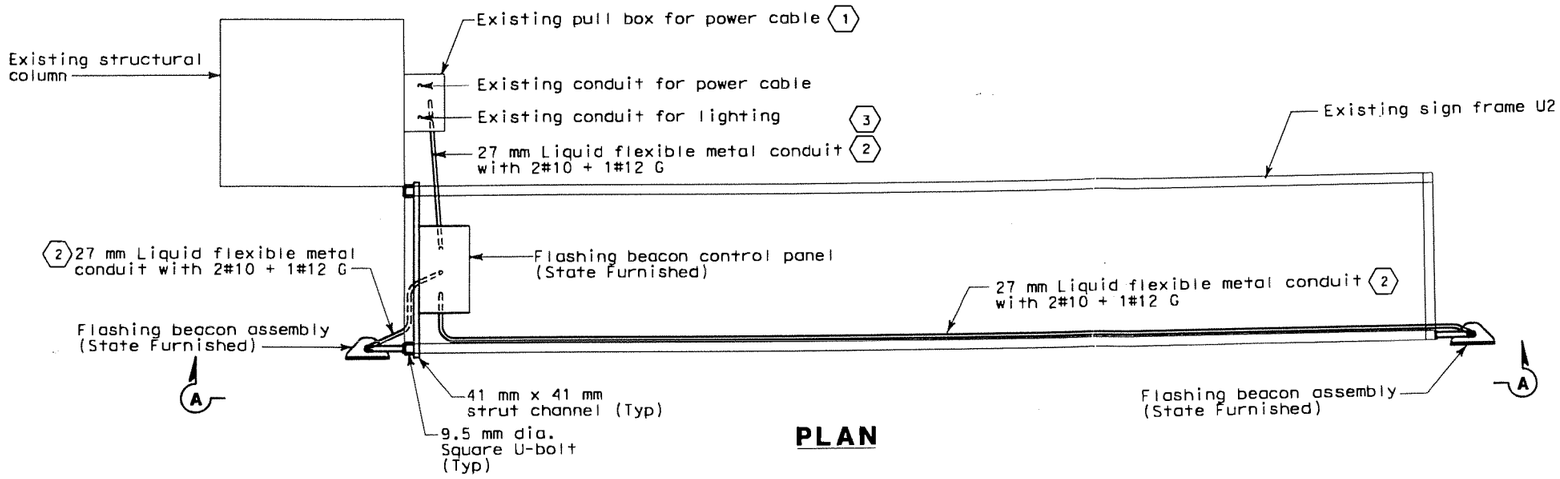

PLAN

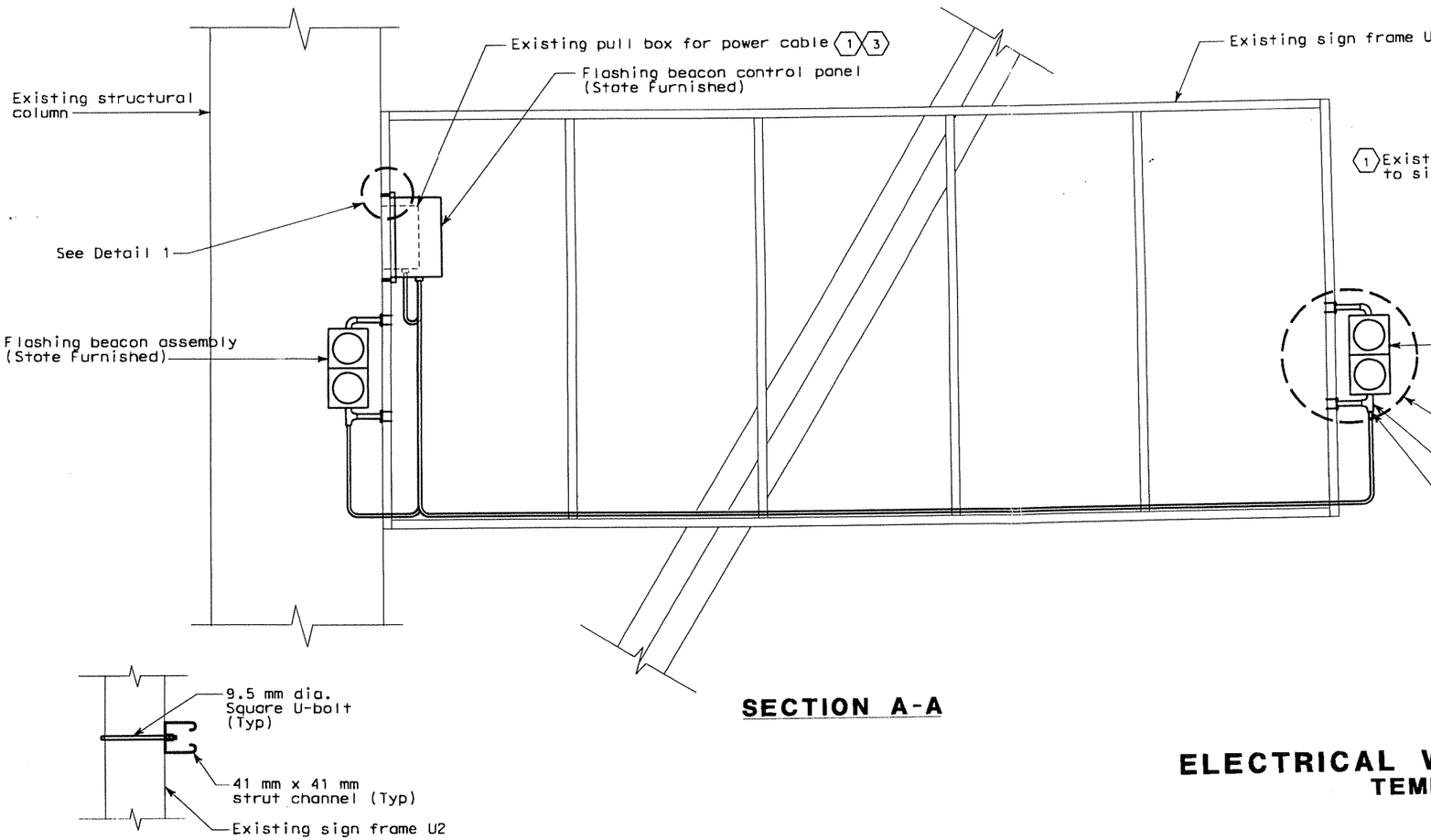

SECTION A-A

DETAIL 1

SHEET NOTES:

(1) De-energize existing power lighting circuit prior to connecting the power to flashing beacon control panel. Power wiring to flashing beacon control assembly shall be made by splicing the existing lighting wires inside the existing power cable pull box.

(2) Attach and secure conduits to sign frame using conduit clamps or stainless steel conduit band.

(3) All conduit connections to flashing beacon control panel, flashing beacon housings and existing pull box shall be watertighted.

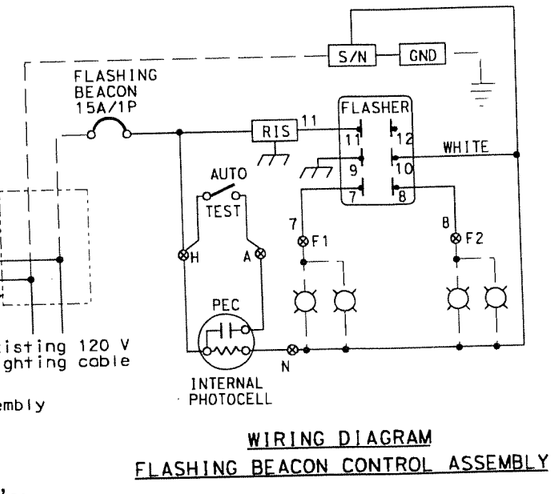

WIRING DIAGRAM
FLASHING BEACON CONTROL ASSEMBLY

DIST	COUNTY	ROUTE	KILOMETER POST TOTAL PROJECT	SHEET No	TOTAL SHEETS
04	SF	80			

Caltrans Metric

01-29-10
REGISTERED ELECTRICAL ENGINEER DATE

FADI WALIEDDINE No. 11465 Exp. 12/31/2011 ELECTRICAL — REGISTERED PROFESSIONAL ENGINEER — STATE OF CALIFORNIA

PLANS APPROVAL DATE

PB AMERICAS, Inc.
A Parsons Brinckerhoff Company
303 Second St., Suite 700N
San Francisco, CA 94107-1317

The State of California or its officers or agents shall not be responsible for the accuracy or completeness of electronic copies of this plan sheet.

Caltrans now has a web site! To get to the web site, go to http://www.dot.ca.gov

CONTRACT NO. 04-0120R4

CONTRACT CHANGE ORDER NO 23551

SHEET 2 OF 12

ELECTRICAL WORK (ROADWAY FLASHING BEACONS)
TEMPORARY WESTBOUND SIGN AT E-6
NO SCALE

SKETCH TEMP-E-001

DATE	REVISED BY	DATE REVISED
01/10	RGG	

CALCULATED/DESIGNED BY
CHECKED BY

DESIGN OVERSIGHT
BEHZAD GOLEMOHAMMADI

STATE OF CALIFORNIA - DEPARTMENT OF TRANSPORTATION
Caltrans

LAST REVISION DATE PLOTTED => 1/29/2010 14:41 AM

DGN FILE =>C:\Documents and Settings\garciaR\My Documents\SAS Files\South Side Detour\YBI Sign Replacement.dgn

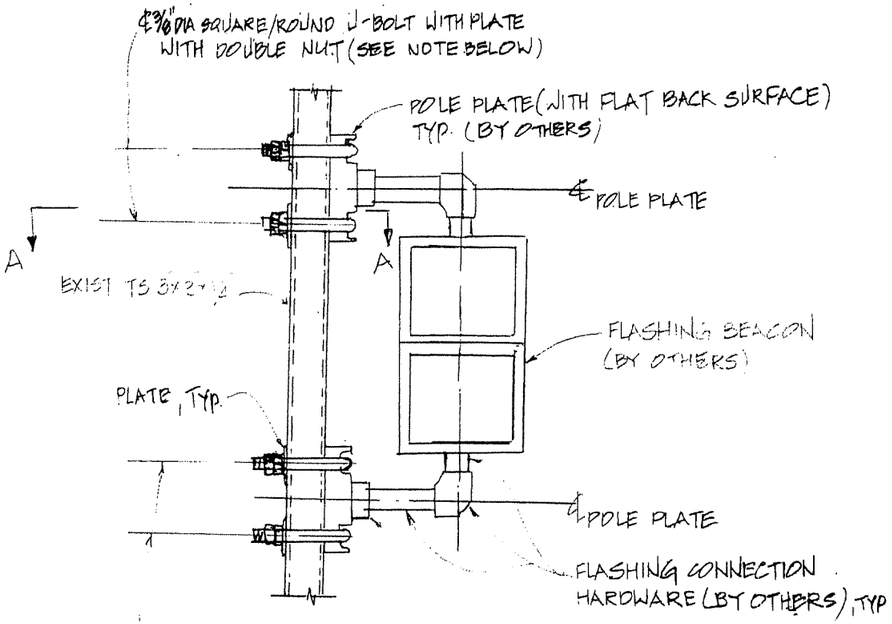

ELEVATION

TYP. FLASHING BEACON CONNECTION DETAIL

NO SCALE

NOTE:

ALL 3/8" DIA U-BOLTS SHALL CONFORM TO SPECIFICATION FOR LOW CARBON STEEL AND SHALL BE "GRAINGER" TYPE OR EQUAL.

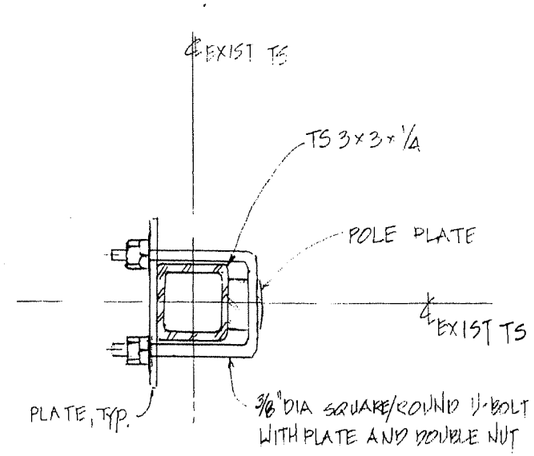

SECTION A-A

TEMPORARY WESTBOUND SIGN AT E-6

SKETCH TEMP-AS-001

REGISTERED PROFESSIONAL ENGINEER
ALEC MELKONIANS
C053452
Exp. 6/30/11
CIVIL
STATE OF CALIFORNIA

CONTRACT NO. 04-0120R4

CONTRACT CHANGE ORDER NO 235 S1

SHEET 3 OF 12

DIST	COUNTY	ROUTE	KILOMETER POST TOTAL PROJECT	SHEET No	TOTAL SHEETS
04	SF	80	12.6/13.2		

REGISTERED CIVIL ENGINEER

PLANS APPROVAL DATE

The State of California or its officers or agents shall not be responsible for the accuracy or completeness of electronic copies of this plan sheet.

Caltrans now has a web site! To get to the web site, go to: http://www.dot.ca.gov

DATE	REVISED BY	DATE REVISED
2/03		2/03

CALCULATED/DESIGNED BY

CHECKED BY

DESIGN OVERSIGHT

STATE OF CALIFORNIA - DEPARTMENT OF TRANSPORTATION

Caltrans

NOTES:

1. Install modified chain link railing (Type 7) with a total height of 2680 mm, measured from top of deck, adjacent to the temporary railing (Type K), from Sta WD2 54+67 ± to 55+50 ± . Chain link fabric to extend to deck level.
2. Install chain link railing (Type 7) atop the Type 732 (Mod) concrete barrier from Sta WD2 54+30 ± to 54+65 ± . Gap between Sta WD2 54+65 ± to 54+67 ± to be covered by chain link fabric.
3. Post for the modified chain link railing shall not be located on top of the expansion joint.
4. Exact limits of chain link railing to be determined by the Engineer.
5. See details for attaching modified chain link railing (Type 7) post to the deck.

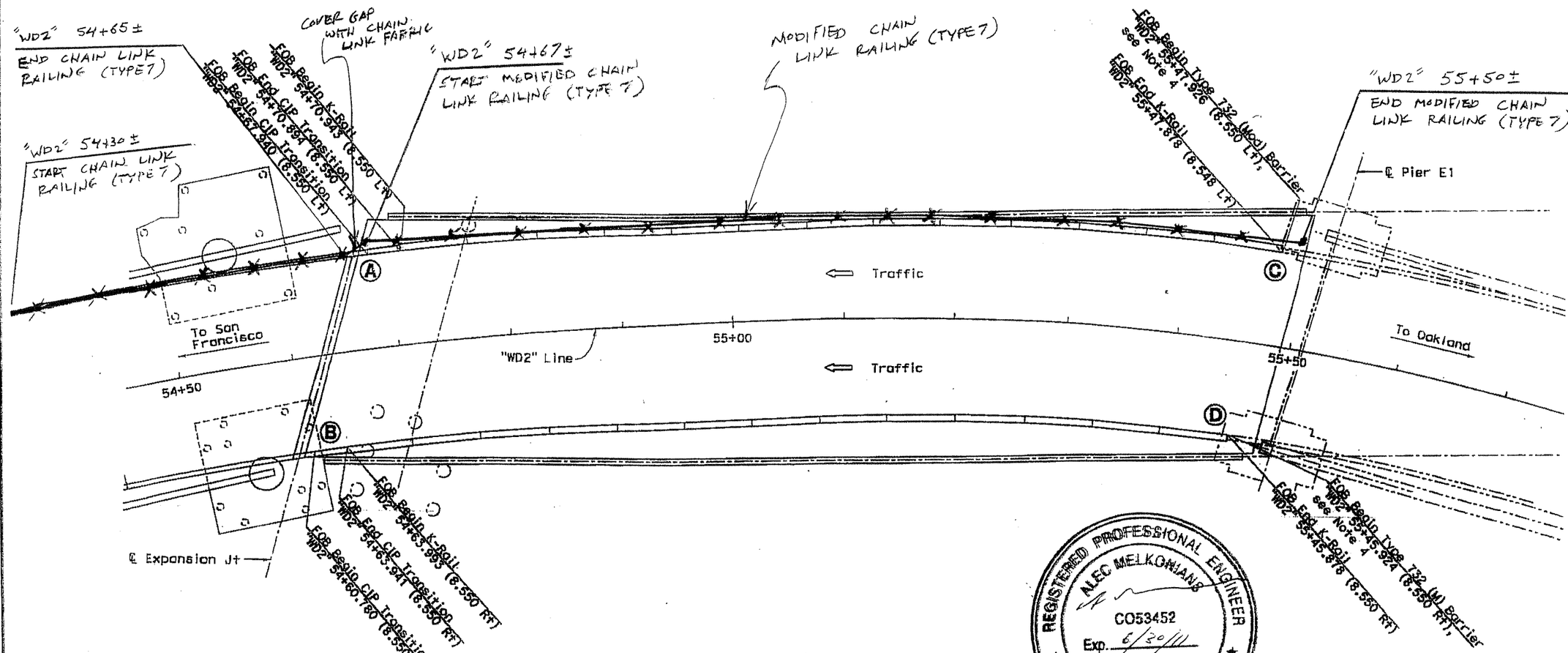

UPPER DECK ("WD2" Line)

No Scale

REGISTERED PROFESSIONAL ENGINEER
ALEC MELKONIANS
CO53452
Exp. 6/30/11
CIVIL
STATE OF CALIFORNIA

ALL DIMENSIONS ARE IN METERS UNLESS OTHERWISE SHOWN

CONTRACT NO. 04-0120R4

CONTRACT CHANGE ORDER NO 235 S1

SHEET 4 OF 12

RELATIVE BORDER SCALE 0 20 40 60 80

DGN FILE => #REQUEST
USERNAME => #USER

CU

EA 0120R1

LAST REVISION 00-00-00 DATE PLOTTED => #DATE TIME PLOTTED => #TIME

DIST	COUNTY	LOCATION CODE	KILOMETER POST TOTAL PROJECT	SHEET No.	TOTAL SHEETS

REGISTERED CIVIL ENGINEER

PLANS APPROVAL DATE

The State of California or its officers or agents shall not be responsible for the accuracy or completeness of electronic copies of this plan sheet.

To get to the Caltrans web site, go to: http://www.dot.ca.gov

Metric

* APPROXIMATE, FIELD TO ADJUST POST SPACING.

REGISTERED PROFESSIONAL ENGINEER
CARLOS MARY TONGSON
No. C67509
EXP: 6/30/01
CIVIL
STATE OF CALIFORNIA

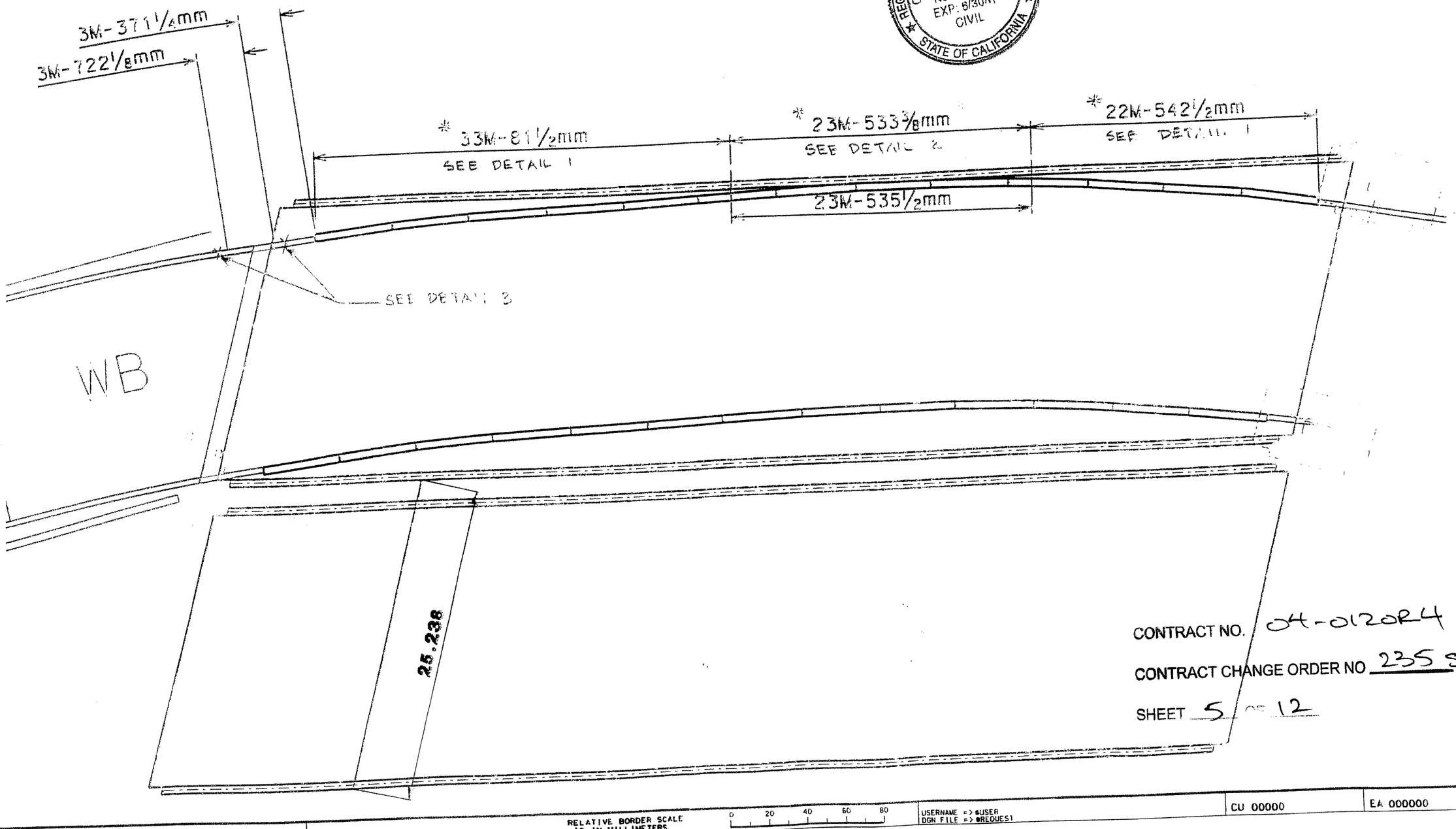

CONTRACT NO. 04-0120R4

CONTRACT CHANGE ORDER NO 235 S1

SHEET 5 OF 12

DATE	REVISED BY	DATE REVISED
1/18	C. Tongson	1/18

CALCULATED/DESIGNED BY: C. Tongson
CHECKED BY: M. Whitsitt

PROJECT ENGINEER

STATE OF CALIFORNIA - DEPARTMENT OF TRANSPORTATION
Caltrans

RELATIVE BORDER SCALE IS IN MILLIMETERS 0 20 40 60 80

USERNAME => $USER
DGN FILE => $REQUEST1

CU 00000 EA 000000

LAST REVISION 00-00-00 DATE PLOTTED => $DATE TIME PLOTTED => $TIME

$REQUEST

DIST	COUNTY	ROUTE	POST MILES TOTAL PROJECT	SHEET NO.	TOTAL SHEETS

REGISTERED CIVIL ENGINEER

PLANS APPROVAL DATE

The State of California or its officers or agents shall not be responsible for the accuracy or completeness of electronic copies of this plan sheet.

To get to the Caltrans web site, go to: http://www.dot.ca.gov

REGISTERED PROFESSIONAL ENGINEER
CARLOS MARY TONGSON
No. C87509
EXP: 5/30/01
CIVIL
STATE OF CALIFORNIA

REGISTERED PROFESSIONAL ENGINEER
CIVIL
STATE OF CALIFORNIA

	DATE	REVISED BY
CALCULATED/ DESIGNED BY	C. Tongson	1/0
CHECKED BY	M. Whiteside	1/0
	DATE REVISED	

PROJECT ENGINEER

STATE OF CALIFORNIA - DEPARTMENT OF TRANSPORTATION

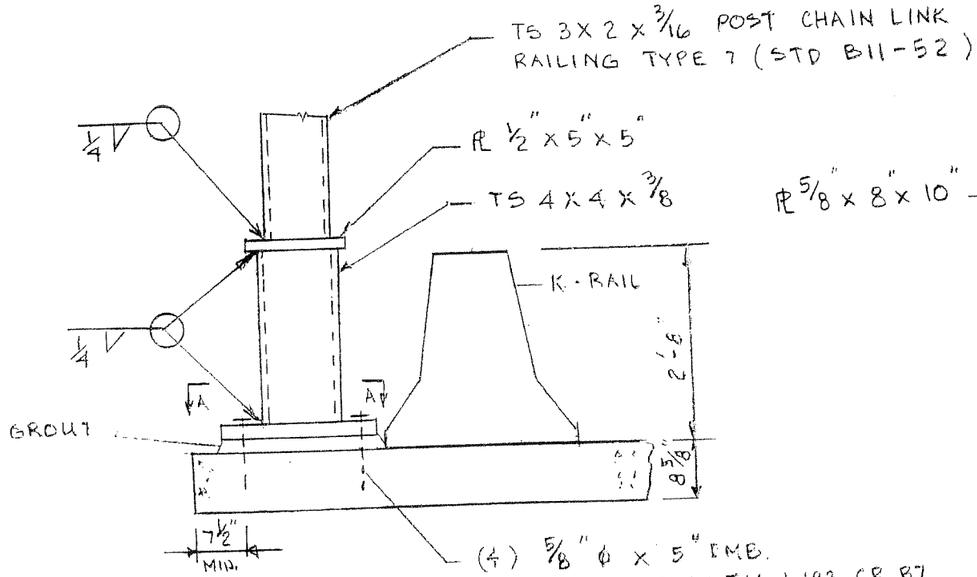

ELEV. VIEW

(MAX. POST SPACING = 8'-0")

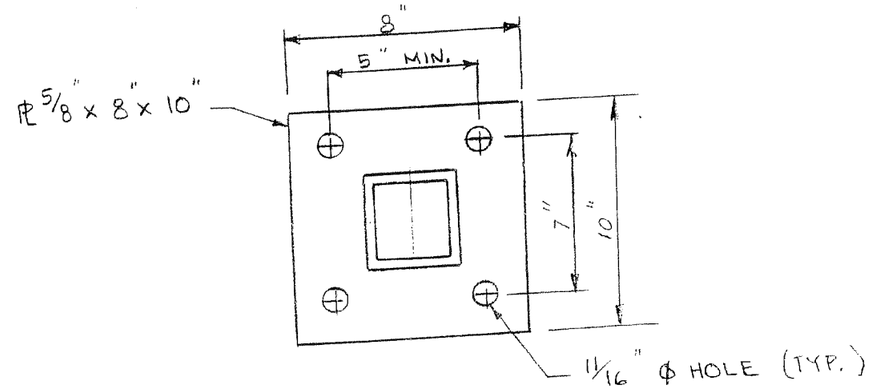

SECT. A-A

NOTES: 1) INSTALL CONCRETE ANCHOR PER MANUFACTURER'S (HILTI) PRODUCT LITERATURE. PROVIDE NUTS AS REQUIRED.

2) ALL OTHER NOTES PER STD. B11-52

CONTRACT NO. 04-012024

CONTRACT CHANGE ORDER NO 235 S1

SHEET 6 OF 12

CHAIN LINK FENCE DETAIL 1

LAST REVISION => DATE PLOTTED => DATE
00-00-00 TIME PLOTTED => TIME

RELATIVE BORDER SCALE IS IN INCHES 0 1 2 3

USERNAME => $USER
DGN FILE => $REQUEST

CU 00000

EA 000000

DIST	COUNTY	ROUTE	POST MILES TOTAL PROJECT	SHEET NO.	TOTAL SHEETS

REGISTERED CIVIL ENGINEER

PLANS APPROVAL DATE

The State of California or its officers or agents shall not be responsible for the accuracy or completeness of electronic copies of this plan sheet.

To get to the Caltrans web site, go to: http://www.dot.ca.gov

REGISTERED PROFESSIONAL ENGINEER
CARLOS MARY TONGSON
No. C67500
EXP. 6/30/11
CIVIL
STATE OF CALIFORNIA

DATE	REVISED BY
1/10	
DATE REVISED	

CALCULATED/DESIGNED BY: C. Tongson 1/10
CHECKED BY: M. Whiteside 1/10

PROJECT ENGINEER

STATE OF CALIFORNIA - DEPARTMENT OF TRANSPORTATION

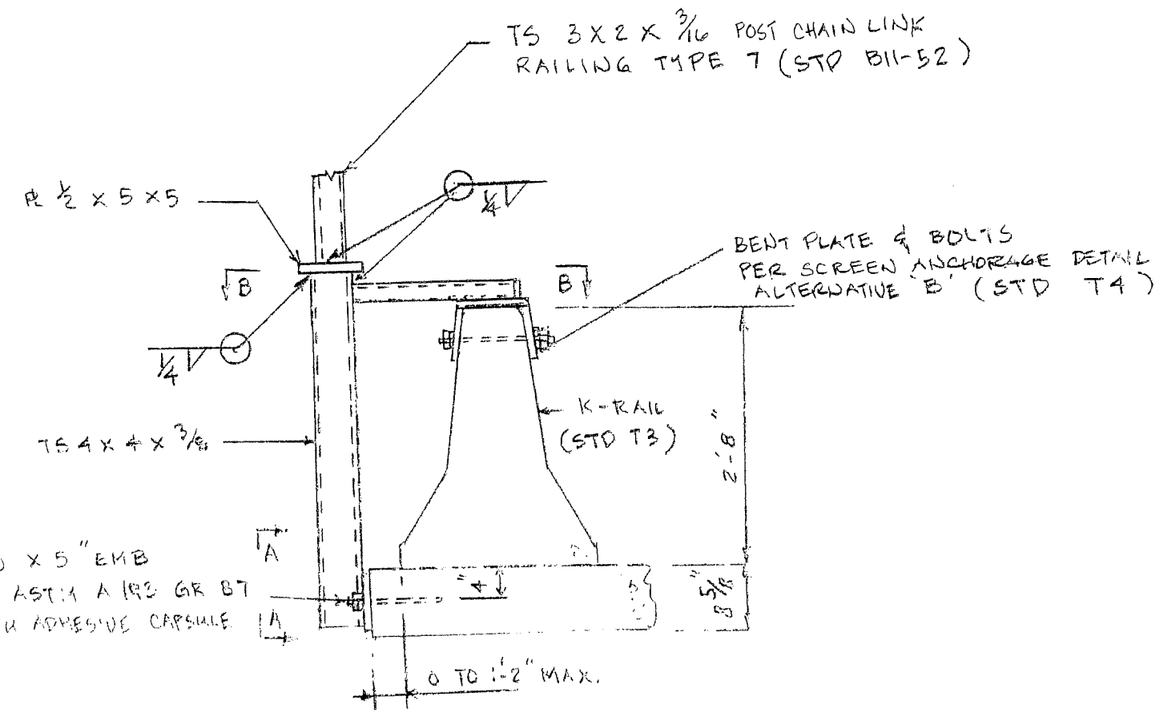

ELEV. VIEW
(MAX. POST SPACING = 8'-0")

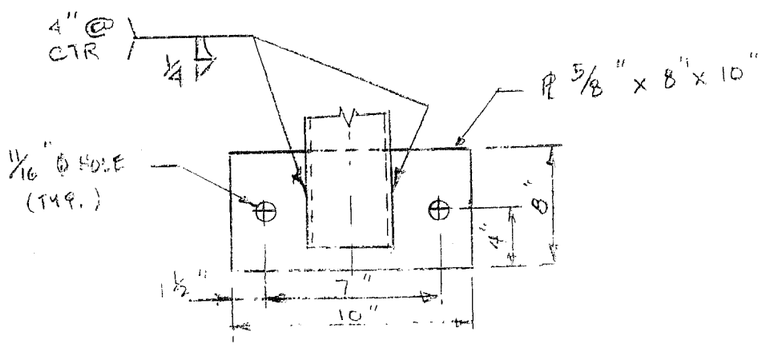

SECT. A-A

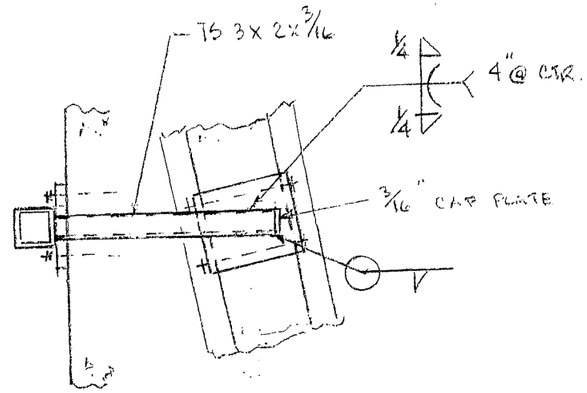

SECT. B-B

NOTES: 1) INSTALL CONCRETE ANCHOR PER MANUFACTURER'S (HILTI) PRODUCT LITERATURE. PROVIDE NUTS AS REQUIRED
2) ALL OTHER NOTES PER STD. B11-52 AND STD. T4

CONTRACT NO. 04-0120R4

CONTRACT CHANGE ORDER NO 235 S1

SHEET 7 OF 12

CHAIN LINK FENCE DETAIL 2

RELATIVE BORDER SCALE IS IN INCHES 0 1 2 3

USERNAME => @USER
DGN FILE => @REQUEST

CU 00000

EA 000000

LAST REVISION => DATE PLOTTED
00-00-00 TIME PLOTTED => TIME

Lawton House.dgn 12/29/2009 8:22:09 AM

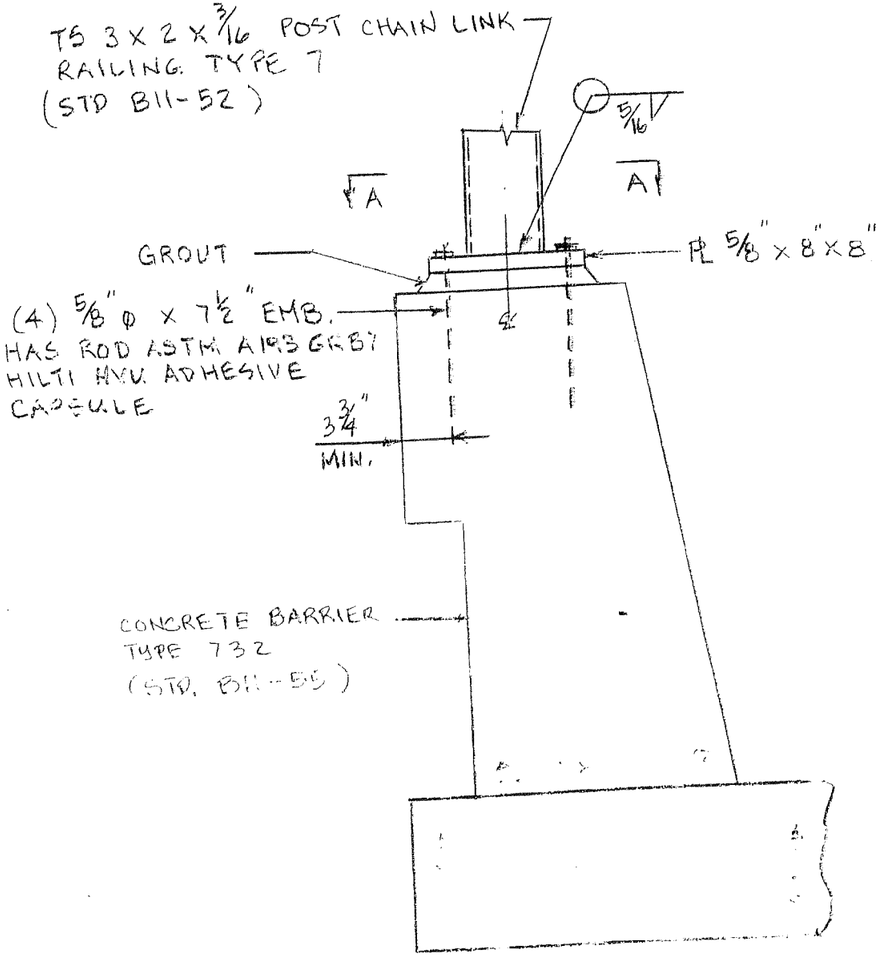

ELEV. VIEW

(MAX. POST SPACING = 10'-0")

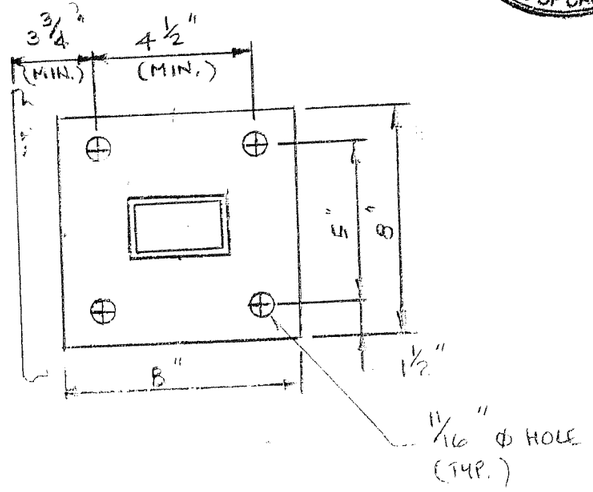

SECT. A-A

NOTES: 1) INSTALL CONCRETE ANCHOR PER MANUFACTURER'S (HILTI) PRODUCT LITERATURE. PROVIDE NUTS AS REQ'D.

2) ALL OTHER NOTES PER STD. B11-52

REGISTERED PROFESSIONAL ENGINEER
CARLOS MARY TONGSON
No. C67509
EXP: 6/30/11
CIVIL
STATE OF CALIFORNIA

DIST	COUNTY	ROUTE	POST MILES TOTAL PROJECT	SHEET NO.	TOTAL SHEETS

REGISTERED CIVIL ENGINEER

PLANS APPROVAL DATE

REGISTERED PROFESSIONAL ENGINEER — No. C67509 — CIVIL — STATE OF CALIFORNIA

The State of California or its officers or agents shall not be responsible for the accuracy or completeness of electronic copies of this plan sheet.

To get to the Caltrans web site, go to: http://www.dot.ca.gov

CONTRACT NO. 04-0120R4

CONTRACT CHANGE ORDER NO 235 S1

SHEET 8 OF 12

CHAIN LINK FENCE DETAIL 3

DATE	REVISED BY	DATE	REVISED
1/10		1/10	

CALCULATED/DESIGNED BY: C. Tongson

CHECKED BY: M. Whitsitt

PROJECT ENGINEER

STATE OF CALIFORNIA - DEPARTMENT OF TRANSPORTATION

RELATIVE BORDER SCALE IS IN INCHES 0 1 2 3

USERNAME => $USER
DGN FILE => $REQUES1

CU 00000 EA 000000

LAST REVISION DATE PLOTTED => $DATE
00-00-00 TIME PLOTTED => $TIME

CONTRACT NO. 04-0120R4

CONTRACT CHANGE ORDER NO 235 S1

SHEET 9 - 12

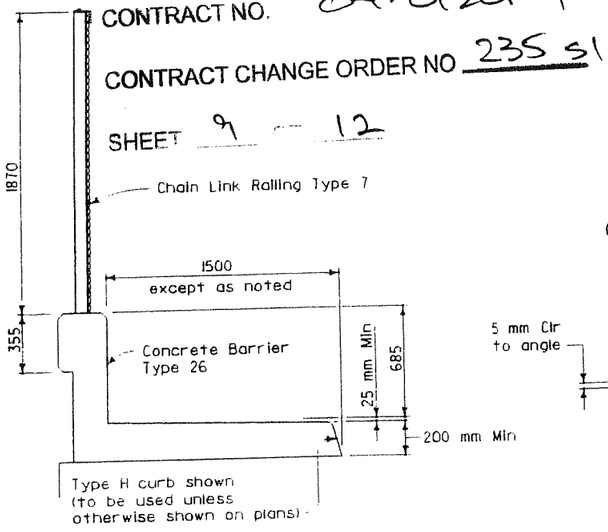

TYPICAL SECTION

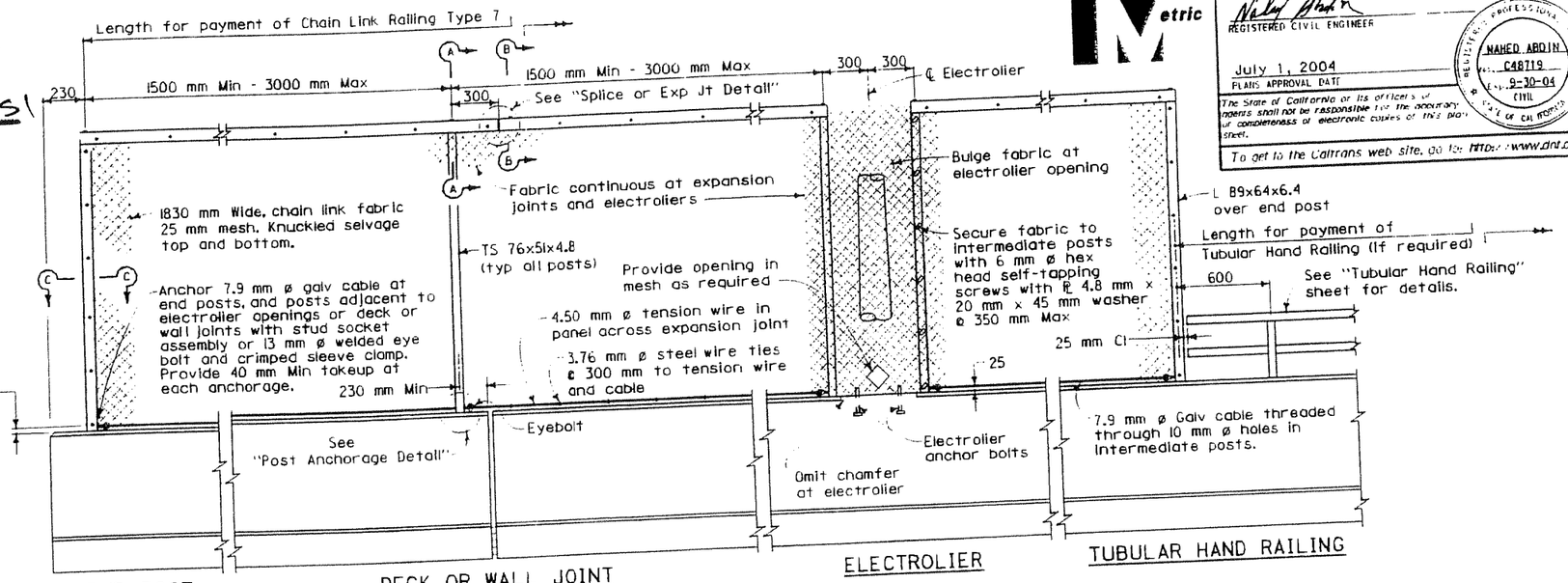

END POST — DECK OR WALL JOINT — ELECTROLIER — TUBULAR HAND RAILING

ELEVATION

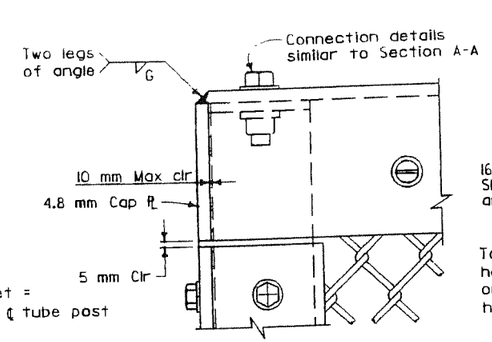

END POST ELEVATION

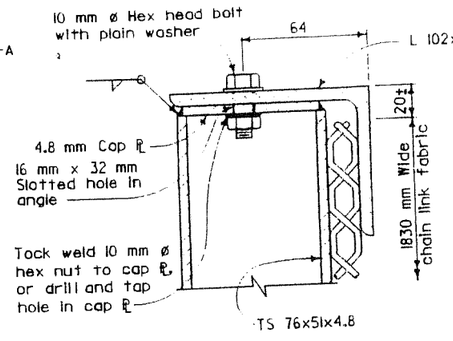

SECTION A-A

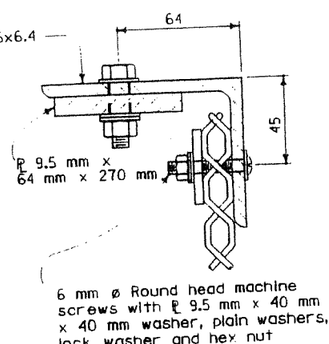

SECTION B-B

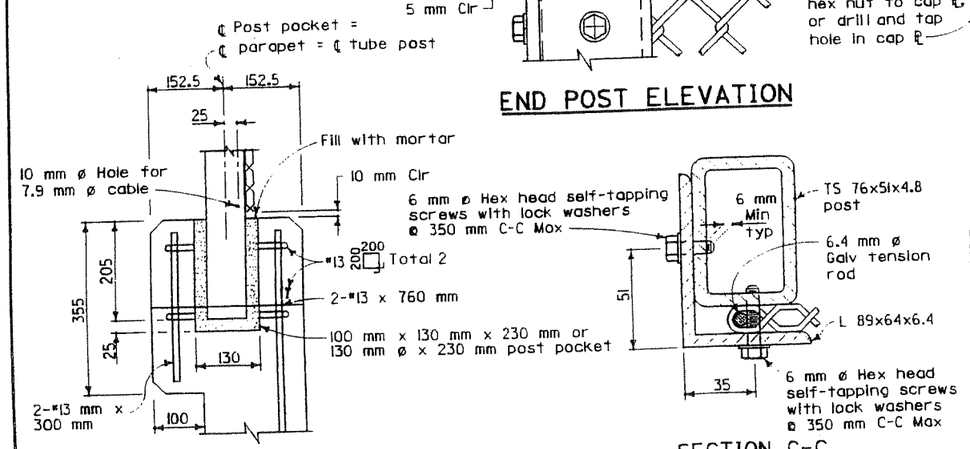

POST ANCHORAGE DETAIL — SECTION C-C

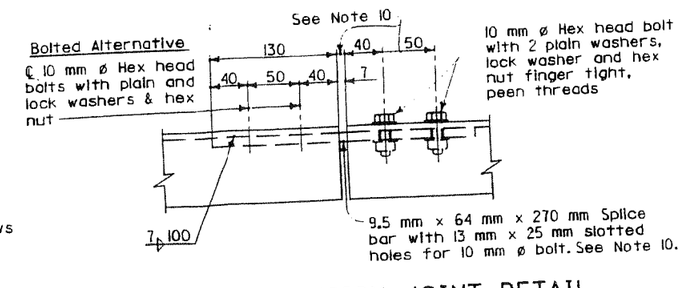

SPLICE OR EXPANSION JOINT DETAIL

NOTES

1. Railing assembly except chain link fabric to be galvanized after fabrication.
2. Posts shall be vertical.
3. Railing shall conform to horizontal and vertical alignment. When railing is placed on a curved horizontal alignment with radius of 45 m or less, thread the 7.9 mm ø cable through 10 mm ø welded eye rods embedded 100 mm into the top of the concrete parapet and equally spaced to limit the midordinate distance between the 7.9 mm ø cable and the curve to 25 mm maximum. Horizontal angle shall be bent to conform to horizontal alignment if radius is 45 m or less and may be on 3 m chords if radius is over 45 m.
4. Horizontal angle shall be continuous over not less than two intermediate posts, except that a shorter length is permitted at expansion joints, electroliers and other rail discontinuities.
5. When rail is on slope, place fabric parallel to slope.
6. Alternative details may be submitted by Contractor for Engineer's approval.
7. For details and reinforcement not shown see Standard Plan B11-54.
8. See Project Plans for limits of Chain Link Railing Type 7.
9. Provide thimbles at all cable loops.
10. Expansion joint same dimension as expansion joint in deck or wall. Increase slotted hole length and splice bar length correspondingly.

DIST	COUNTY	ROUTE	KILOMETER POST TOTAL PROJECT	SHEET NO.	TOTAL SHEETS

REGISTERED CIVIL ENGINEER

July 1, 2004
PLANS APPROVAL DATE

NAHED ABDIN
C48719
9-30-04
CIVIL

The State of California or its officers or agents shall not be responsible for the accuracy or completeness of electronic copies of this plan sheet.

To get to the Caltrans web site, go to: http://www.dot.ca.gov/

Caltrans Metric

STATE OF CALIFORNIA
DEPARTMENT OF TRANSPORTATION

CHAIN LINK RAILING TYPE 7

NO SCALE

ALL DIMENSIONS ARE IN MILLIMETERS UNLESS OTHERWISE SHOWN

B11-52

2004 Std PLAN B11-52

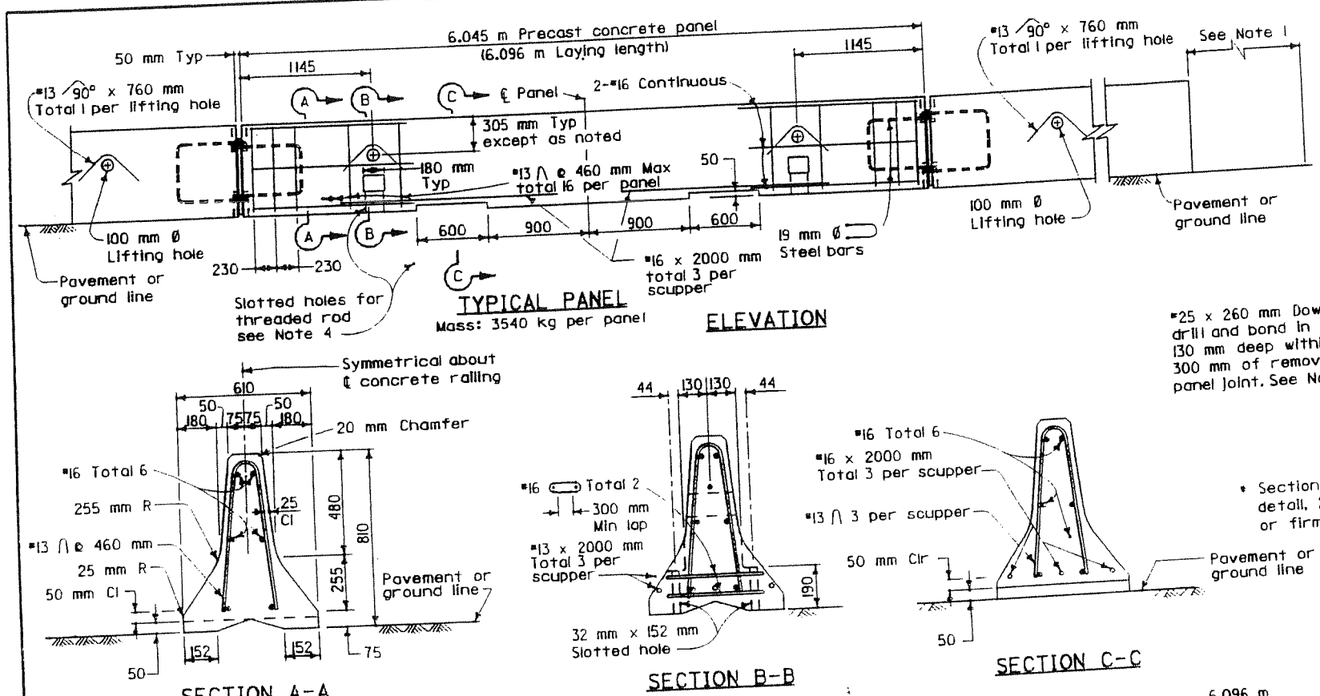

TYPICAL PANEL
Mass: 3540 kg per panel

ELEVATION

MINIMUM EDGE DISTANCE
See Note 4

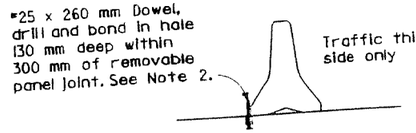

SECTION G-G *

* Section G-G is for PCC pavement. Alternative detail, 25.4 mm Ø pins 610 mm long driven in AC or firm soil permitted, minimum 460 mm deep.

NOTES

1. For end treatment, layout and crash cushions, where needed, see Project Plans or Special Provisions.
2. All 90 mm gaps at removable panels are to be backed at the base with #25 x 260 mm dowel or 25.4 mm Ø pin each side of joint. See Section G-G.
3. Where Temporary Railing (Type K) is placed on curves and radii that are too severe to connect panels with bolted joints, the railing is to be backed continuously with earth fill. See Section F-F.
4. Where the offset distance from the exposed edge of deck to the closest edge of the temporary railing is less than 610 mm, attach each panel to deck slab with 25 mm diameter threaded rods (total four per panel) inserted through the slotted holes of the panel and bond in drilled holes 150 mm deep in the deck slabs. See "Bridge Memo to Designers" Manual.

SECTION A-A

SECTION B-B

SECTION C-C

CONTRACT NO. 04-012RH

CONTRACT CHANGE ORDER NO 23551-

SHEET 10 OF 12

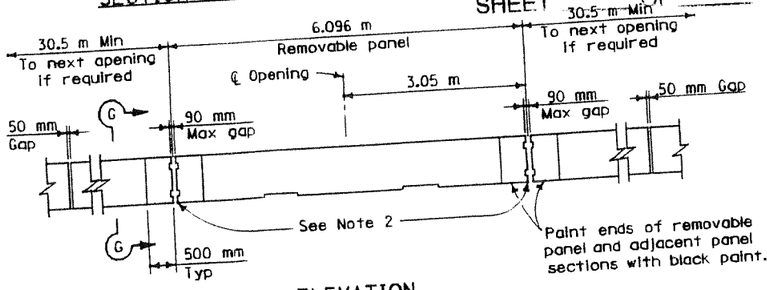

ELEVATION
TYPICAL OPENING DETAIL

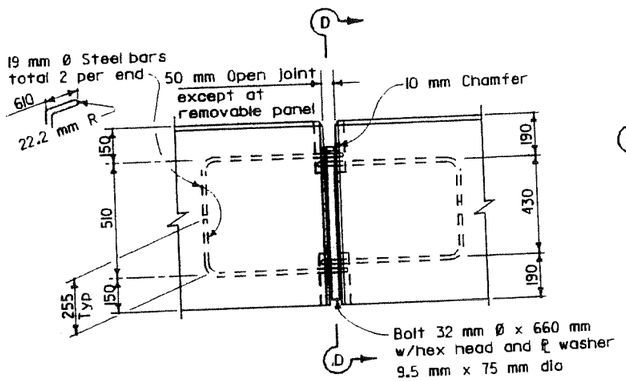

ELEVATION

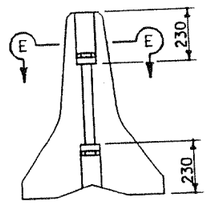

VIEW D-D

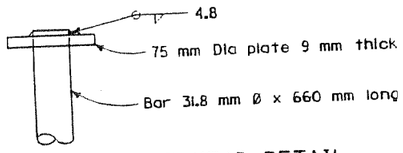

ALTERNATIVE HEAD DETAIL

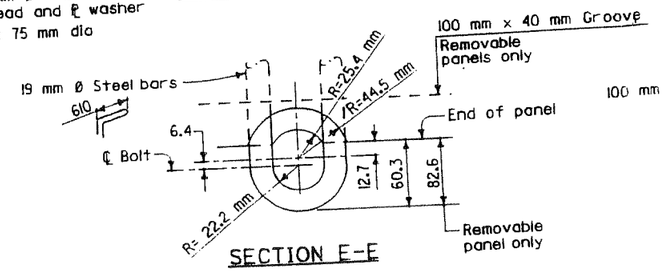

SECTION E-E

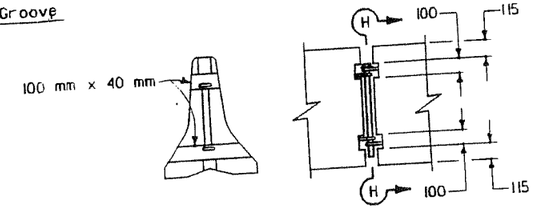

SECTION H-H ELEVATION

REMOVABLE PANEL GROOVE DETAILS

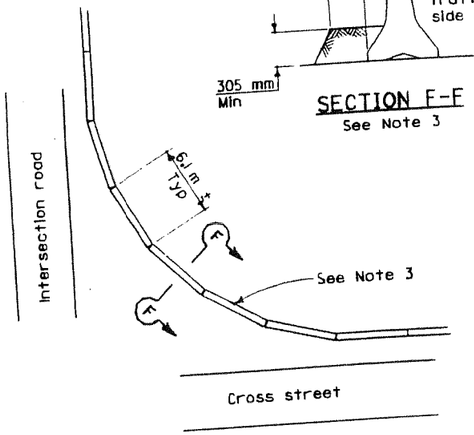

SECTION F-F
See Note 3

CURVED LAYOUT

STATE OF CALIFORNIA
DEPARTMENT OF TRANSPORTATION

TEMPORARY RAILING (TYPE K)

NO SCALE

ALL DIMENSIONS ARE IN MILLIMETERS UNLESS OTHERWISE SHOWN

T3

DIST | COUNTY | ROUTE | KILOMETER POST TOTAL PROJECT | SHEET NO. | TOTAL SHEETS

REGISTERED CIVIL ENGINEER

July 1, 2004
PLANS APPROVAL DATE

Ellis K. Wirst
No. C17926
Exp. 6-30-05
CIVIL
STATE OF CALIFORNIA

The State of California or its officers or agents shall not be responsible for the accuracy or completeness of electronic copies of this plan sheet.

To get to the Caltrans web site, go to: http://www.dot.ca.gov

Metric

2004 Std PLAN T3

CONTRACT NO. 04-0120R4

CONTRACT CHANGE ORDER NO. 235 S1

SHEET 11 OF 12

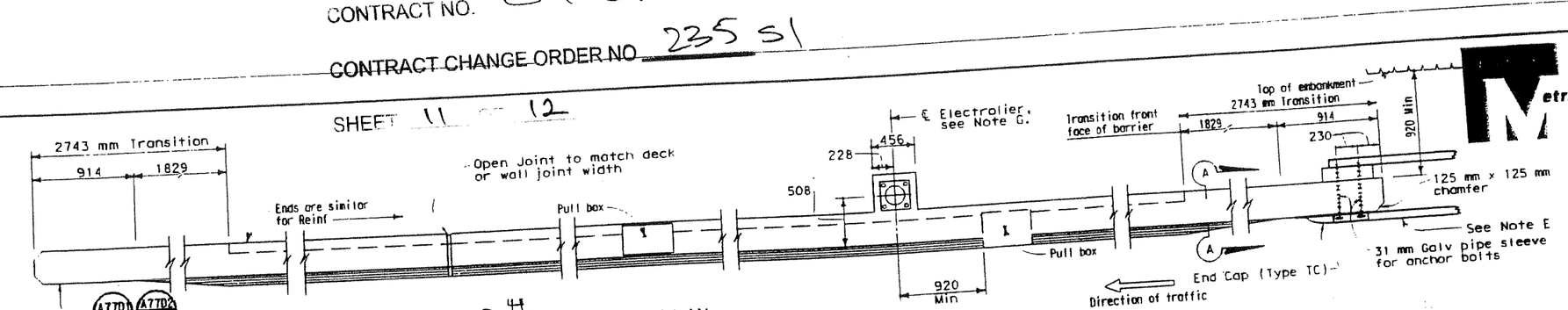

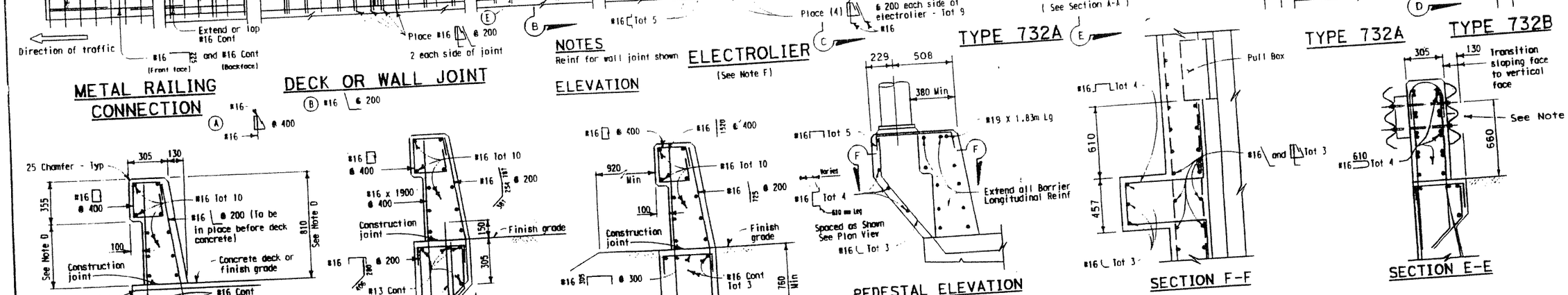

NOTES

A. Walls are to be backfilled before barrier is placed.

B. Clearance to reinforcing steel in barrier to be 25 mm, except as noted. Longitudinal reinforcement to stop at all expansion joints.

C. See project plans for locations of electroliers and pull boxes.

D. Dimensions may vary with roadway cross slope and with certain thickness of surfacing. See Project Plans.

E. For typical metal railing connection details not shown, see Standard Plans A77J1 and A77J2.

F. For electrical details, See Standard Plans ES-9A, ES-9B, ES-9C, ES-9D and ES-9E. The maximum number of conduits in the barrier is limited to two (2) 50 mm conduits along with one (1) 75 mm conduit. When a 75 mm conduit is used, it is restricted to the base of the barrier.

G. For electrolier mounting details, See Standard Plans ES-6A and ES-6B.

H. Minimum concrete edge distance, to the reinforcing shown, shall be maintained. Edge distance may be adjusted to accommodate increase in concrete cover for

STATE OF CALIFORNIA
DEPARTMENT OF TRANSPORTATION

CONCRETE BARRIER TYPE 732

NO SCALE

ALL DIMENSIONS ARE IN MILLIMETERS UNLESS OTHERWISE SHOWN

B11-55

DIST	COUNTY	ROUTE	KILOMETER POST TOTAL PROJECT	SHEET NO.	TOTAL SHEETS

REGISTERED CIVIL ENGINEER

NAHED ARDIN
C48719
Exp. 9-30-04
CIVIL
STATE OF CALIFORNIA

July 1, 2004
PLANS APPROVAL DATE

The State of California or its officers or agents shall not be responsible for the accuracy or completeness of electronic copies of this sheet.

To get to the Caltrans web site, go to: http://www.dot.ca.gov

2004 Std PLAN B11-55

273

Metric

DIST	COUNTY	ROUTE	KILOMETER POST TOTAL PROJECT	SHEET NO.	TOTAL SHEETS

Ellis K. Hirst
REGISTERED CIVIL ENGINEER

July 1, 2004
PLANS APPROVAL DATE

REGISTERED PROFESSIONAL ENGINEER — Ellis K Hirst — No. C17926 — Exp. 6-30-05 — CIVIL — STATE OF CALIFORNIA

The State of California or its officers or agents shall not be responsible for the accuracy or completeness of electronic copies of this plan sheet.

To get to the Caltrans web site, go to: http://www.dot.ca.gov

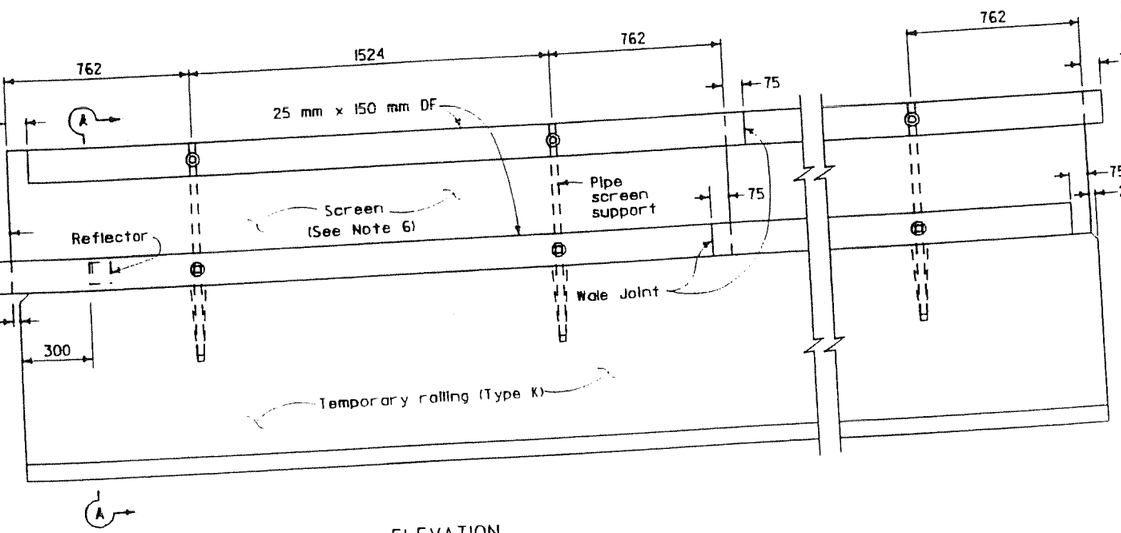

ELEVATION

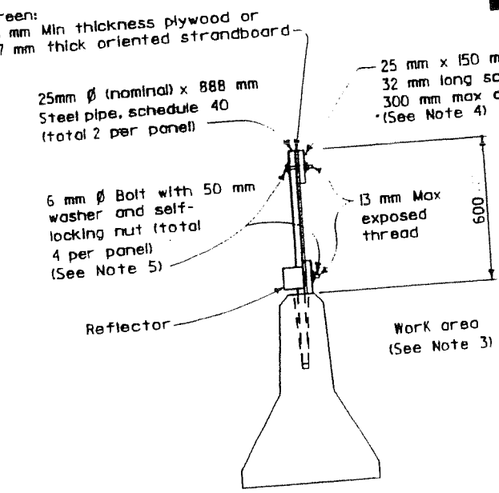

SECTION A-A

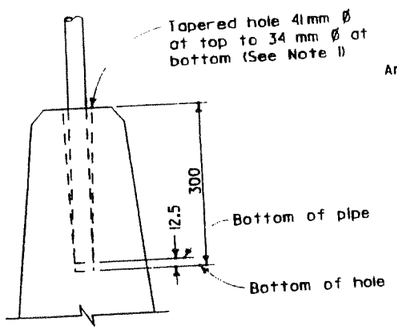

SCREEN ANCHORAGE DETAIL

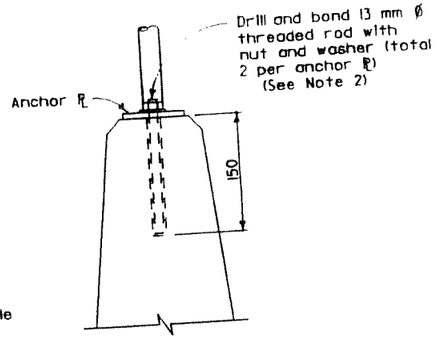

SCREEN ANCHORAGE DETAIL
ALTERNATIVE 'A'

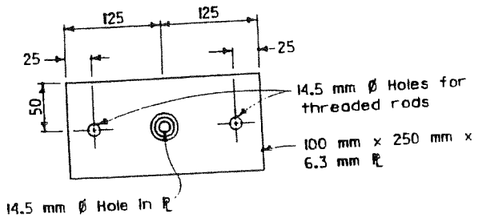

PLAN

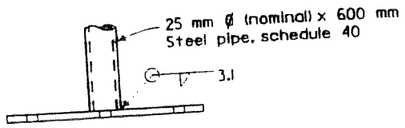

ELEVATION

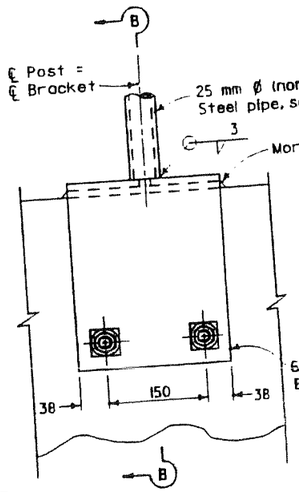

ELEVATION

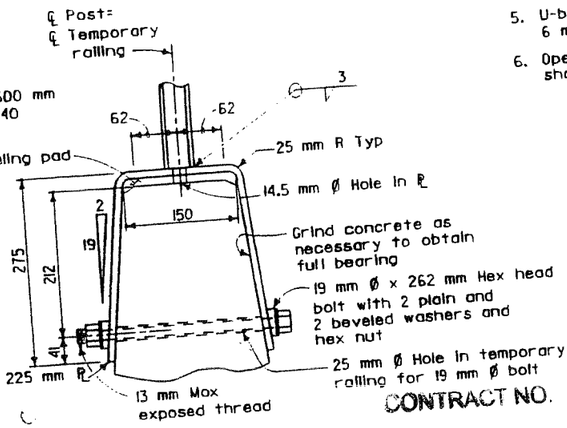

SECTION B-B

SCREEN ANCHORAGE DETAIL
ALTERNATIVE 'B'

NOTE

1. Straight holes 38 mm Ø of the depth shown may be used in lieu of the tapered holes.
2. Resin capsule-type anchorage devices may be substituted for threaded rods.
3. Place screen on work area side of the temporary railing where traffic will only be on one side of the temporary railing.
4. Clinched 8d box nails may be substituted for screws. The nails shall be clinched on the work area side of the screen where traffic will only be on one side of the temporary railing.
5. U-bolts may be substituted for 6 mm Ø bolts.
6. Openings in the screen of 1.0 m length shall be provided at 60 m intervals.

CONTRACT NO. 04-0120R4

CONTRACT CHANGE ORDER NO 235 S1

SHEET 12 OF 12

STATE OF CALIFORNIA
DEPARTMENT OF TRANSPORTATION

TEMPORARY TRAFFIC SCREEN

NO SCALE

ALL DIMENSIONS ARE IN MILLIMETERS UNLESS OTHERWISE SHOWN

T4

2004 Std PLAN T4

215

STATE OF CALIFORNIA - DEPARTMENT OF TRANSPORTATION

CONTRACT CHANGE ORDER MEMORANDUM

TO: MIKE FORNER / DEANNA VILCHECK DV	FILE: E.A. 04 - 0120R4
FROM: JEANNIE BALDERRAMOS	CO-RTE-PM SF-80-12.6/13.2
	FED. NO.

CCO#: 235	SUPPLEMENT#: 2	Category Code: CKTJ	CONTINGENCY BALANCE (incl. this change) $35,657,244.59
COST: $350,000.00	INCREASE ☑ DECREASE ☐		HEADQUARTERS APPROVAL REQUIRED? ☑ YES ☐ NO
SUPPLEMENTAL FUNDS PROVIDED: $0.00			IS THIS REQUEST IN ACCORDANCE WITH ENVIRONMENTAL DOCUMENTS? ☑ YES ☐ NO

CCO DESCRIPTION:
Mainline Traffic Enhancements

PROJECT DESCRIPTION:
CONSTRUCT ROUTE 80 TEMP BYPASS STRUCTURE

Original Contract Time:	Time Adj. This Change:	Previously Approved CCO Time Adjustments:	Percentage Time Adjusted: (including this change)	Total # of Unreconciled Deferred Time CCO(s): (including this change)
475 Day(s)	0 Day(s)	1660 Day(s)	349 %	7

THIS CHANGE ORDER PROVIDES FOR:
Furnishing and installing a dynamic message sign.

This project provides for the construction of a detour of the mainline eastbound and westbound I-80 traffic that will allow for the tie in of the new east span of the San Francisco Oakland Bay Bridge to Yerba Buena Island. The detour, which spans approximately 650 meters, is comprised of a double deck steel truss bridge which transitions to a concrete and roadway structure as it approaches the Yerba Buena Island tunnel.

The detour opened to traffic on September 8, 2009. The original Change Order No. 235, along with Supplement No. 1, provided for the contractor to furnish and install additional radar warning signs, additional pavement delineation, additional advisory and warning signing, additional lighting, flashing beacons and chain link railing. Project Development has now requested additional safety enhancements concerning the installation of a large dynamic message sign to provide advance warning to westbound traffic approaching the detour. This change order shall provide for furnishing and installing this sign.

The work includes furnishing, mounting and powering a message sign with an approximate size of 280" wide by 84" tall which will provide dynamic imaging to the traveling public. The sign will be mounted on an existing overhead sign structure with additional mounting hardware. The removal of the existing changeable message sign that will be replaced by this new sign is also included under this change order.

Additional funding is also anticipated to be required for the scope of work provided under the original Change Order No. 235 and Supplement No. 1 as the costs of furnishing and installing the additional signing and fencing has exceeded the original cost estimates.

Compensation for this work shall be paid as extra work at force account at an estimated cost of $350,000.00 which shall be financed from the contract's contingency funds. A cost analysis is on file.

No adjustment of contract time is warranted as the work will not affect the controlling operation.

This change was concurred with by Ken Terpstra - Project Manager, Jaime Gutierrez - Project Engineer, and Lina Ellis - Maintenance.

ADA Notice: For individuals with sensory disabilities, this document is available in alternate formats. For information call: (916) 654-6410 or TDD (916) 654-3880 or write Records and Forms Management, 1120 N Street, MS-89, Sacramento, CA 95814.

CONCURRED BY:			
Construction Engineer:	Jeannie Balderramos, RE	Date	5-17-10
Bridge Engineer:	Bill Casey, Bridge Engineer	Date	5/17/10
Project Engineer:	Jaime Gutierrez, PE	Date	5/14/10
Project Manager:	Ken Terpstra, PM	Date	5/13/10
FHWA Rep.:		Date	
Environmental:		Date	
Other (specify):	Lina Ellis, Maintenance	Date	5/13/10
Other (specify):	Mohan Ayadurai, Struct. Rep.	Date	4/19/10
District Prior Approval By:		Date	
HQ (Issue Approve) By:	Larry Salhaney, HQ CCO Engine	Date	4/29/10
Resident Engineer's Signature: Jeannie Balderramos		Date	5-17-10

ESTIMATE OF COST

	THIS REQUEST	TOTAL TO DATE
ITEMS	$0.00	$0.00
FORCE ACCOUNT	$350,000.00	$850,000.00
AGREED PRICE	$0.00	$0.00
ADJUSTMENT	$0.00	$0.00
TOTAL	$350,000.00	$850,000.00

FEDERAL PARTICIPATION

☐ PARTICIPATING ☐ PARTICIPATING IN PART ☑ NONE
☐ NON-PARTICIPATING (MAINTENANCE) ☐ NON-PARTICIPATING

FEDERAL SEGREGATION (if more than one Funding Source or P.I.P. type)
☐ CCO FUNDED PER CONTRACT ☐ CCO FUNDED AS FOLLOWS

FEDERAL FUNDING SOURCE	PERCENT

ADA Notice: For individuals with sensory disabilities, this document is available in alternate formats. For information call: (916) 654-6410 or TDD (916) 654-3880 or write Records and Forms Management, 1120 N Street, MS-89, Sacramento, CA 95814.

STATE OF CALIFORNIA - DEPARTMENT OF TRANSPORTATION

CONTRACT CHANGE ORDER

Change Requested by: Engineer

CCO: 235	Suppl. No. 3	Contract No. 04 - 0120R4	Road SF-80-12.6/13.2	FED. AID LOC.:

To: CC MYERS INC

You are directed to make the following changes from the plans and specifications or do the following described work not included in the plans and specifications for this contract. ***NOTE: This change order is not effective until approved by the Engineer.***

Description of work to be done, estimate of quantities and prices to be paid. (Segregate between additional work at contract price, agreed price and force account.) Unless otherwise stated, rates for rental of equipment cover only such time as equipment is actually used and no allowance will be made for idle time. This last percentage shown is the net accumulated increase or decrease from the original quantity in the Engineer's Estimate.

Extra Work at Force Account:

Provide additional funds for the work specified under the original Change Order No. 235, Change Order No. 235, Supplement No. 1 and Change Order No. 235 Supplement No. 2 as determined by the Engineer.

Estimated cost of Extra Work at Force Account $130,000.00

Estimated Cost: **Increase** ☑ **Decrease** ☐ **$130,000.00**

By reason of this order the time of completion will be adjusted as follows: 0 days

Signature Jeannie Balderrama	**Resident Engineer** JEANNIE BALDERRAMOS	**Date** 9-27-10
Signature Michael Thomas	**Area Construction Manager** for DEANNA VILCHECK	**Date** 9-27-10
Signature Deanna Vilcheck	**Area Construction Manager** DEANNA VILCHECK	**Date** 10/7/10

We the undersigned contractor, have given careful consideration to the change proposed and agree, if this proposal is approved, that we will provide all equipment, furnish the materials, except as may otherwise be noted above, and perform all services necessary for the work above specified, and will accept as full payment therefor the prices shown above.

NOTE: If you, the contractor, do not sign acceptance of this order, your attention is directed to the requirements of the specifications as to proceeding with the ordered work and filing a written protest within the time therein specified.

Signature NOT REQUIRED	**(Print name and title)**	**Date**

STATE OF CALIFORNIA - DEPARTMENT OF TRANSPORTATION

CONTRACT CHANGE ORDER

Change Requested by: Engineer

CCO: 237	Suppl. No. 0	Contract No. 04 - 0120R4	Road SF-80-12.6/13.2	FED. AID LOC.:

To: **CC MYERS INC**

You are directed to make the following changes from the plans and specifications or do the following described work not included in the plans and specifications for this contract. ***NOTE: This change order is not effective until approved by the Engineer.***

Description of work to be done, estimate of quantities and prices to be paid. (Segregate between additional work at contract price, agreed price and force account.) Unless otherwise stated, rates for rental of equipment cover only such time as equipment is actually used and no allowance will be made for idle time. This last percentage shown is the net accumulated increase or decrease from the original quantity in the Engineer's Estimate.

Adjustment of Compensation at Lump Sum:

In accordance with Section 4-1.03 "Changes" of the contract Standard Specifications, provide compensation to the Contractor for all additional costs incurred due to the extended operation and delayed removal of the temporary construction marine access trestle located south of Pier E1 due to all Department delays to the work.

For this work, the Contractor will be compensated a lump sum of $267,510.00. This sum constitutes full and final compensation for all additional costs incurred due to the extended operation of the trestle, including all markups, due to all Department delays and changes to the work.

Estimated cost of Adjustment of Compensation at Lump Sum $267,510.00

Compensation for delays resulting from this work will be made in accordance with Section 8-1.09 "Right of Way Delays" of the Standard Specifications.

RECEIVED 01 8 40 JUN 23 01

RECEIVED 01 8 39 JUN 23 10

Estimated Cost: Increase ☑ Decrease ☐ **$267,510.00**

By reason of this order the time of completion will be adjusted as follows: 0 days

Submitted by

Signature	Resident Engineer	Date
Deanna Vilcheck	for BILL CASEY	2/9/10

Approval Recommended by

Signature	Area Construction Manager	Date
Deanna Vilcheck	DEANNA VILCHECK	2/9/10

Engineer Approval by

Signature	Area Construction Manager	Date
Deanna Vilcheck	DEANNA VILCHECK	3/22/10

We the undersigned contractor, have given careful consideration to the change proposed and agree, if this proposal is approved, that we will provide all equipment, furnish the materials, except as may otherwise be noted above, and perform all services necessary for the work above specified, and will accept as full payment therefor the prices shown above.

NOTE: If you, the contractor, do not sign acceptance of this order, your attention is directed to the requirements of the specifications as to proceeding with the ordered work and filing a written protest within the time therein specified.

Contractor Acceptance by

Signature	(Print name and title)	Date
	DANIEL E. HUNICK, PRESIDENT	3/2/10

STATE OF CALIFORNIA - DEPARTMENT OF TRANSPORTATION

CONTRACT CHANGE ORDER MEMORANDUM

TO: MIKE FORNER / DEANNA VILCHECK	FILE: E.A. 04 - 0120R4
	CO-RTE-PM SF-80-12.6/13.2
FROM: BILL CASEY	FED. NO.
CCO#: 237 SUPPLEMENT#: 0 Category Code: AGZZ	CONTINGENCY BALANCE (incl. this change) $42,201,293.59
COST: $267,510.00 INCREASE ☑ DECREASE ☐	HEADQUARTERS APPROVAL REQUIRED? ☑ YES ☐ NO
SUPPLEMENTAL FUNDS PROVIDED: $0.00	IS THIS REQUEST IN ACCORDANCE WITH ENVIRONMENTAL DOCUMENTS? ☑ YES ☐ NO
CCO DESCRIPTION: Temp Trestle Extended Rental Costs	**PROJECT DESCRIPTION:** CONSTRUCT ROUTE 80 TEMP BYPASS STRUCTURE

Original Contract Time:	Time Adj. This Change:	Previously Approved CCO Time Adjustments:	Percentage Time Adjusted: (including this change)	Total # of Unreconciled Deferred Time CCO(s): (including this change)
475 Day(s)	0 Day(s)	1660 Day(s)	349 %	0

THIS CHANGE ORDER PROVIDES FOR:

Compensation to the contractor for extended equipment rental costs and escalation costs associated with their temporary marine access trestle.

This contract calls for the construction of a temporary detour for both eastbound and westbound I-80 traffic that allows for the tie in of the east span of the new San Francisco Oakland Bay Bridge (SFOBB) to Yerba Buena Island. The detour consist of three main structures, the East Tie-In (ETI) to the bridge, the West Tie-In (WTI) to the island and the Viaduct structure between the two.

Two separate Department strategy memorandums, dated December 14, 2006 and December 25, 2006, approved by Tony Anziano - Toll Bridge Program Manager and Richard Land - Chief Engineer, recommended that the Department assume responsibility for the designs of the East Tie-In (ETI) and West Tie-In (WTI) portions of this contract for the direct enhancement to the Viaduct, and incorporated seismic retrofit work of the permanent Yerba Buena Island Transition Structure (YBITS) onto this project.

As part of the contract work, the contractor constructed a temporary marine access trestle that allowed for the marine delivery of structural steel directly to the project site. The trestle is approximately 50 meters long and 10 meters wide and is comprised mainly of steel piles and beams along with 12x12 wooden timbers. Due to extensive Department ordered changes and delays to the project, the contract completion date has been extended by approximately 5 years. Due to these delays, the contractor has incurred extended non-operating equipment rental costs for the trestle's extended use and escalation costs associated with the removal of the trestle. This change order provides compensation for these additional costs.

The contract baseline schedule showed the temporary trestle was to be removed in June of 2005. Due to the Department delays to the contract, the trestle was required to remain in place through September of 2009. The trestle was used to receive structural steel deliveries for both the Viaduct and East-Tie In structures. Compensation for the extended rental of the trestle is based on the daily rental rates provided by the Department for non-operated equipment. Compensation for labor and equipment escalation costs for the removal of the trestle is based on an as-planned verses actual cost basis.

Compensation shall be paid as an adjustment of compensation at an agreed lump sum of $267,510.00 which shall be financed from the contract's contingency funds. A cost estimate is on file.

Compensation for delays resulting from this work will be made in accordance with Section 8-1.09 "Right of Way Delays" of the Standard Specifications.

No adjustment of contract time is warranted as this change will not affect the controlling operation.

This change was concurred with by Alec Melkonians - Project Manager and Jaime Gutierrez - Project Engineer.

Maintenance concurrence is not required as this change doesn't affect any permanent roadway features.

ADA Notice: For individuals with sensory disabilities, this document is available in alternate formats. For information call: (916) 654-6410 or TDD (916) 654-3880 or write Records and Forms Management, 1120 N Street, MS-89, Sacramento, CA 95814.

CONCURRED BY:		
Construction Engineer:	Bill Casey, Resident Engineer	Date 1-29-10
Bridge Engineer:		Date
Project Engineer:	~~Minh B. Nguyen, PE~~ JAIME GUTIERREZ	Date ~~1/29/10~~ 4/9/10
Project Manager:	Alec Melkonians	Date 1/29/10
FHWA Rep.:		Date
Environmental:		Date
Other (specify):		Date
Other (specify):		Date
District Prior Approval By:		Date
HQ (Issue Approve) By:	Larry Salhaney, HQ CCO Engine	Date 2/1/10
Resident Engineer's Signature:		Date

1-29-10

ESTIMATE OF COST

	THIS REQUEST	TOTAL TO DATE
ITEMS	$0.00	$0.00
FORCE ACCOUNT	$0.00	$0.00
AGREED PRICE	$0.00	$0.00
ADJUSTMENT	$267,510.00	$267,510.00
TOTAL	$267,510.00	$267,510.00

FEDERAL PARTICIPATION

☐ PARTICIPATING ☐ PARTICIPATING IN PART ☑ NONE
☐ NON-PARTICIPATING (MAINTENANCE) ☐ NON-PARTICIPATING

FEDERAL SEGREGATION (if more than one Funding Source or P.I.P. type)
☐ CCO FUNDED PER CONTRACT ☐ CCO FUNDED AS FOLLOWS

FEDERAL FUNDING SOURCE	PERCENT

ADA Notice: For individuals with sensory disabilities, this document is available in alternate formats. For information call: (916) 654-6410 or TDD (916) 654-3880 or write Records and Forms Management, 1120 N Street, MS-89, Sacramento, CA 95814.

STATE OF CALIFORNIA - DEPARTMENT OF TRANSPORTATION

CONTRACT CHANGE ORDER

Change Requested by: Engineer

CCO 238	Suppl. No. 0	Contract No. 04 - 0120R4	Road SF-80-12.6/13.2	FED. AID LOC.:

To: **CC MYERS INC**

You are directed to make the following changes from the plans and specifications or do the following described work not included in the plans and specifications for this contract. ***NOTE: This change order is not effective until approved by the Engineer.***

Description of work to be done, estimate of quantities and prices to be paid. (Segregate between additional work at contract price, agreed price and force account.) Unless otherwise stated, rates for rental of equipment cover only such time as equipment is actually used and no allowance will be made for idle time. This last percentage shown is the net accumulated increase or decrease from the original quantity in the Engineer's Estimate.

Incorporate the following drainage modifications to the steel Viaduct of the Temporary Bypass Structure (Bridge No. 34-0006 (TEMP)):

1) Eliminate the 8% depression in the OGAC wearing surface at the barrier scuppers for both the upper and lower decks (WD1 and ED1 Lines).

2) Provide for additional scuppers on the upper deck (WD1 Line) as determined by the Engineer.

Extra Work at Force Account:

Provide for the design modifications of the Viaduct drainage system called for under this change order and as authorized by the Engineer and provide for the construction of the additional scuppers at the upper deck concrete barrier as required by these design modifications.

Estimated Cost of Extra Work at Force Account $100,000.00

Estimated Cost: Increase ☑ Decrease ☐ **$100,000.00**

By reason of this order the time of completion will be adjusted as follows: 0 days

Submitted by

Signature	Resident Engineer	Date
	BILL CASEY	12/23/09

Approval Recommended by

Signature	Area Construction Manager	Date
Deanna Vilcheck	DEANNA VILCHECK	1/5/10

Engineer Approval by

Signature	Area Construction Manager	Date
Deanna Vilcheck	DEANNA VILCHECK	1/19/10

We the undersigned contractor, have given careful consideration to the change proposed and agree, if this proposal is approved, that we will provide all equipment, furnish the materials, except as may otherwise be noted above, and perform all services necessary for the work above specified, and will accept as full payment therefor the prices shown above.

NOTE: If you, the contractor, do not sign acceptance of this order, your attention is directed to the requirements of the specifications as to proceeding with the ordered work and filing a written protest within the time therein specified.

Contractor Acceptance by

Signature	(Print name and title)	Date
	STEVE FRANCIS, CHIEF ESTIMATOR	1.13.10

CONTRACT CHANGE ORDER

Change Requested by: Engineer

CCO: 239	Suppl. No. 0	Contract No. 04 - 0120R4	Road SF-80-12.6/13.2	FED. AID LOC.:

To: **CC MYERS INC**

You are directed to make the following changes from the plans and specifications or do the following described work not included in the plans and specifications for this contract. ***NOTE: This change order is not effective until approved by the Engineer.***

Description of work to be done, estimate of quantities and prices to be paid. (Segregate between additional work at contract price, agreed price and force account.) Unless otherwise stated, rates for rental of equipment cover only such time as equipment is actually used and no allowance will be made for idle time. This last percentage shown is the net accumulated increase or decrease from the original quantity in the Engineer's Estimate.

The following adjustments shall be made due to the November 9, 2009 and November 10, 2009 ordered suspension of the Span YB1 through Span YB3 bridge removal work due to the truck accident which occurred within the project limits:

1) The lump sum price for Contract Bid Item No. 8, "Time-Related Overhead" shall be adjusted by 2 working days. These 2 compensable days shall replace 2 of the 30 non-compensable days provided under Change Order No. 91, Supplement No. 2. The remaining 28 non-compensable working days shall be defined as the last 28 working days of the contract from November 13 through December 10, 2010.

2) The date the Contractor shall complete all Contract work within the area defined as Area PRA, as defined under Change Order No. 91, Supplement No. 2, shall be extended by 2 working days from July 31, 2010 to August 2, 2010.

No contract time extension shall be provided due to the suspension of work specified under this change order.

Extra Work at Force Account:

Provide compensation to the Contractor for all costs associated with the cleanup of the November 9, 2009 truck accident and any ensuing structural inspection and repair of damage to the Viaduct structure as determined by the Engineer.

Estimated cost of Extra Work at Force Account $30,000.00

Adjustment of Compensation at Unit Price:

In accordance with Section 10-1.20 "Time-Related Overhead" of the contract Special Provisions, the lump sum price for Contract Bid Item No. 8, "Time-Related Overhead" shall be adjusted by $12,631.58 per working day for each of the 2 compensable working days that are provided under this change order.

Cost of Adjustment of Compensation at Agreed Unit Price:

2 working days @ $12,631.58 per working day = $25,263.16

This lump sum shall be adjusted for time-related overhead payments in excess of 149 percent of the Contractor's lump sum price bid for Contract Bid Item No. 8 "Time Related Overhead". This adjustment shall be performed in accordance with Section 10-1.20 "Time-Related Overhead" of the contract Special Provisions.

Estimated cost of Adjustment of Compensation at Agreed Unit Price $25,263.16

CONTRACT CHANGE ORDER

Change Requested by: Engineer

CCO: 239	Suppl. No. 0	Contract No. 04 - 0120R4	Road SF-80-12.6/13.2	FED. AID LOC.:

RECEIVED
2010 APR 13 P 1:57

Estimated Cost: Increase ☑ Decrease ☐ **$55,263.16**

By reason of this order the time of completion will be adjusted as follows: 0 days

Submitted by

Signature	Resident Engineer	Date
	BILL CASEY	1-19-10

Approval Recommended by

Signature	Area Construction Manager	Date
Deanna Vilcheck	DEANNA VILCHECK	1/14/10

Engineer Approval by

Signature	Acting Area Construction Manager	Date
Deanna Vilcheck	DEANNA VILCHECK	2/3/10

We the undersigned contractor, have given careful consideration to the change proposed and agree, if this proposal is approved, that we will provide all equipment, furnish the materials, except as may otherwise be noted above, and perform all services necessary for the work above specified, and will accept as full payment therefor the prices shown above.

NOTE: If you, the contractor, do not sign acceptance of this order, your attention is directed to the requirements of the specifications as to proceeding with the ordered work and filing a written protest within the time therein specified.

Contractor Acceptance by

Signature	(Print name and title)	Date
	STEVE FRANCIS, CHIEF ESTIMATOR	1.25.10

STATE OF CALIFORNIA - DEPARTMENT OF TRANSPORTATION

CONTRACT CHANGE ORDER MEMORANDUM

TO: MIKE FORNER / DEANNA VILCHECK	FILE: **E.A.** 04 - 0120R4
	CO-RTE-PM SF-80-12.6/13.2
FROM: BILL CASEY	**FED. NO.**
CCO#: **239** SUPPLEMENT#: **0** Category Code: **CXXX**	CONTINGENCY BALANCE (incl. this change) **$43,929,083.59**
COST: **$55,263.16** INCREASE ☑ DECREASE ☐	HEADQUARTERS APPROVAL REQUIRED? ☐ YES ☑ NO
SUPPLEMENTAL FUNDS PROVIDED: **$0.00**	IS THIS REQUEST IN ACCORDANCE WITH ENVIRONMENTAL DOCUMENTS? ☐ YES ☑ NO
CCO DESCRIPTION: Truck Accident ROW Delay	**PROJECT DESCRIPTION:** CONSTRUCT ROUTE 80 TEMP BYPASS STRUCTURE

Original Contract Time:	Time Adj. This Change:	Previously Approved CCO Time Adjustments:	Percentage Time Adjusted: (including this change)	Total # of Unreconciled Deferred Time CCO(s): (including this change)
475 Day(s)	**0** Day(s)	**1600** Day(s)	**337** %	**0**

THIS CHANGE ORDER PROVIDES FOR:

Compensation and an adjustment of an internal contract milestone resulting from a truck accident within the project limits.

This contract calls for the construction of a temporary detour for both eastbound and westbound I-80 traffic that allows for the tie in of the east span of the new San Francisco Oakland Bay Bridge (SFOBB) to Yerba Buena Island. The detour consist of three main structures, the east tie in (ETI) to the bridge, the west tie in (WTI) to the island and the viaduct structure between the two tie ins. Once traffic is placed on the detour, the contract provides for the removal of the existing structure. The contract was awarded as a performance based project, with the contractor responsible for meeting the design criteria specified in the contract

Two separate Department strategy memorandums, dated December 14, 2006 and December 25, 2006, approved by Tony Anziano - Toll Bridge Program Manager and Richard Land - Chief Engineer, recommended that the Department assume responsibility for the designs of the East Tie-In (ETI) and West Tie-In (WTI) portions of this contract, and incorporated seismic retrofit work of the permanent Yerba Buena Island Transition Structure (YBITS) onto this project. The approval of these strategy memorandums extended the project completion date approximately 5 years.

The temporary detour was opened to traffic in September 2009 at which time the work pertaining to the removal of the existing bridge began. On the morning of November 9, 2009, a semi-trailer truck lost control while driving on the upper deck of the detour and fell 150 feet into the worksite below. This incident resulted in a 2-day suspension of the bridge removal work on the abandoned structure while the accident investigate was performed and the site was cleaned up.

The suspension directly impacted the controlling bridge removal operation and a time impact analysis shows a 2 working day time extension should be granted to the contract. The suspension also resulted in a 2 day impact to the internal milestone of completing work within a specified area of the project site (Area PRA) that was established under Change Order No. 91, Supplement No. 2.

Change Order No. 91, Supplement No. 2 provided a 465 working day time extension to the contract with 30 days specified as non-compensable delays. The contractor has agreed to accept 2 additional days of compensable time (time-related overhead) for the impacts resulting from the suspension of work with no extension of the contract time. This will result in 2 compensable days replacing 2 of the 30 non-compensable days specified under Change Order No. 91, Supplement No. 2.

The contractor has agreed to accept this replacement of non-compensable days with compensable days in lieu of an actual time extension at the request of the Department. This will alleviate potential conflicts with the Yerba Buena Island Transition Structure contract (04-0120S4) which has a specified move-in date after the completion of this contract. The change order also provides a 2 day extension to the Area PRA internal milestone.

This change order also provides for the cleanup of the accident site within the project limits and for the contractor to provide for the inspection and repair of the damage caused by the truck impacting one of the concrete columns of the Viaduct structure. The Viaduct structure was designed by the contractor under the performance based design criteria and the inspection and repair shall satisfy the designer that the structure has no adverse structural impacts.

ADA Notice: For individuals with sensory disabilities, this document is available in alternate formats. For information call: (916) 654-6410 or TDD (916) 654-3880 or write Records and Forms Management, 1120 N Street, MS-89, Sacramento, CA 95814.

Compensation for time related overhead costs shall be paid as an adjustment of compensation at an agreed unit price at a cost of $25,263.16. This sum is based upon a rate of $12,631.58 per working day as calculated from Contract Bid Item No. 8 "Time-Related Overhead" in accordance with Section 10-1.20 "Time-Related Overhead" of the contract Special Provisions. The costs of the actual accident cleanup and inspection and repair shall be paid as extra work at force account at an estimated cost of $30,000.00. The total estimated change order cost of $55,263.16 shall be financed from the contract's contingency funds.

This change order also requires the adjustment of time related overhead payments in excess of 149 percent of the Contractor's lump sum price bid for Contract Bid Item No. 8. This adjustment shall be performed through a separate change order based upon documented costs incurred in accordance with Section 10-1.20 of the contract Special Provisions.

This change was concurred with by Alec Melkonians - Asst. Project Manager, and Minh B. Nguyen - Project Engineer.

Maintenance concurrence is not required as this change doesn't affect any permanent roadway features.

CONCURRED BY:		
Construction Engineer:	Bill Casey, Resident Engineer	Date 1-14-10
Bridge Engineer:		Date
Project Engineer:	Minh B. Nguyen, PE	Date 1/11/10
Project Manager:	Alec Melkonians	Date 1/8/10
FHWA Rep.:		Date
Environmental:		Date
Other (specify):		Date
Other (specify):		Date
District Prior Approval By:		Date
HQ (Issue Approve) By:		Date
Resident Engineer's Signature:		Date 1-14-10

ESTIMATE OF COST

	THIS REQUEST	TOTAL TO DATE
ITEMS	$0.00	$0.00
FORCE ACCOUNT	$30,000.00	$30,000.00
AGREED PRICE	$0.00	$0.00
ADJUSTMENT	$25,263.16	$25,263.16
TOTAL	$55,263.16	$55,263.16

FEDERAL PARTICIPATION

☐ PARTICIPATING ☐ PARTICIPATING IN PART ☑ NONE
☐ NON-PARTICIPATING (MAINTENANCE) ☐ NON-PARTICIPATING

FEDERAL SEGREGATION (if more than one Funding Source or P.I.P. type)
☐ CCO FUNDED PER CONTRACT ☐ CCO FUNDED AS FOLLOWS

FEDERAL FUNDING SOURCE	PERCENT

ADA Notice: For individuals with sensory disabilities, this document is available in alternate formats. For information call: (916) 654-6410 or TDD (916) 654-3880 or write Records and Forms Management, 1120 N Street, MS-89, Sacramento, CA 95814.

STATE OF CALIFORNIA - DEPARTMENT OF TRANSPORTATION

CONTRACT CHANGE ORDER

Change Requested by: Engineer

CCO: 240	Suppl. No. 0	Contract No. 04 - 0120R4	Road SF-80-12.6/13.2	FED. AID LOC.:

To: **CC MYERS INC**

You are directed to make the following changes from the plans and specifications or do the following described work not included in the plans and specifications for this contract. ***NOTE: This change order is not effective until approved by the Engineer.***

Description of work to be done, estimate of quantities and prices to be paid. (Segregate between additional work at contract price, agreed price and force account.) Unless otherwise stated, rates for rental of equipment cover only such time as equipment is actually used and no allowance will be made for idle time. This last percentage shown is the net accumulated increase or decrease from the original quantity in the Engineer's Estimate.

Extra Work at Unit Price:

Provide for nighttime lane closures of the Westbound upper deck (WD1 Line) and Eastbound lower deck (ED1 Line) as allowed under Sheet No. 2 of this change order and as determined by the Engineer.

For this work, the Contractor shall be compensated the following agreed unit prices for each individual deck closure provided:

Monday Night through Thursday Night Closures 128 EA @ $3,620.00 /EA =$463,360.00
Friday Night Closure 28 EA @ $4,210.00 /EA =$117,880.00
Saturday, Sunday and Holiday Night Closures 70 EA @ $5,240.00 /EA =$366,800.00

These unit prices constitute full compensation, including all markups, for the lane closures provided under this change order.

Estimated cost of Extra Work at Agreed Unit Price $948,040.00

Estimated Cost: Increase ☑ Decrease ☐ **$948,040.00**

By reason of this order the time of completion will be adjusted as follows: 0 days

Submitted by

Signature	Resident Engineer	Date
[signature]	BILL CASEY	1-25-10

Approval Recommended by

Signature	Area Construction Manager	Date
[signature]	DEANNA VILCHECK	1-25-10

Engineer Approval by

Signature	Acting Area Construction Manager	Date
[signature]	for DEANNA VILCHECK	2/18/10

We the undersigned contractor, have given careful consideration to the change proposed and agree, if this proposal is approved, that we will provide all equipment, furnish the materials, except as may otherwise be noted above, and perform all services necessary for the work above specified, and will accept as full payment therefor the prices shown above.

NOTE: If you, the contractor, do not sign acceptance of this order, your attention is directed to the requirements of the specifications as to proceeding with the ordered work and filing a written protest within the time therein specified.

Contractor Acceptance by

Signature	(Print name and title)	Date
[signature]	DANIEL E. HIMICK, PRESIDENT	2/16/10

WB Lane Closure Hours

	Sun. - Mon.				Mon. - Tues				Tues. - Wed.				Wed. - Thurs.				Thurs. - Fri.				Fri. - Sat.				Sat. - Sun.			
	1 lane	2 lanes	3 lanes	4 lanes	1 lane	2 lanes	3 lanes	4 lanes	1 lane	2 lanes	3 lanes	4 lanes	1 lane	2 lanes	3 lanes	4 lanes	1 lane	2 lanes	3 lanes	4 lanes	1 lane	2 lanes	3 lanes	4 lanes	1 lane	2 lanes	3 lanes	4 lanes
19:00																												
20:00																												
21:00																												
22:00																												
23:00																												
00:00																												
1:00																												
2:00																												
3:00																												
4:00																												
5:00																												
6:00																												
7:00																												
8:00																												
9:00																												
10:00																												

22:30 hours

23:30 hours

09:30 hours

EB Lane Closure Hours

	Sun. - Mon.				Mon. - Tues				Tues. - Wed.				Wed. - Thurs.				Thurs. - Fri.				Fri. - Sat.				Sat. - Sun.			
	1 lane	2 lanes	3 lanes	4 lanes	1 lane	2 lanes	3 lanes	4 lanes	1 lane	2 lanes	3 lanes	4 lanes	1 lane	2 lanes	3 lanes	4 lanes	1 lane	2 lanes	3 lanes	4 lanes	1 lane	2 lanes	3 lanes	4 lanes	1 lane	2 lanes	3 lanes	4 lanes
20:00																												
21:00																												
22:00																												
23:00																												
00:00																												
1:00																												
2:00																												
3:00																												
4:00																												
5:00																												
6:00																												
7:00																												
8:00																												
9:00																												
10:00																												

23:30 hours

09:30 hours

Allowable Lane Closure Hours

REGISTERED PROFESSIONAL ENGINEER
DOUGLAS A. JOHNSON
No. C 52971
Exp. 12-31-10
CIVIL
STATE OF CALIFORNIA

CONTRACT NO. 04-0120R4

CONTRACT CHANGE ORDER NO. 240

SHEET 2 OF 2

CONTRACT CHANGE ORDER

Change Requested by: Engineer

CCO: 240	Suppl. No. 1	Contract No. 04 - 0120R4	Road SF-80-12.6/13.2	FED. AID LOC.:

To: CC MYERS INC

You are directed to make the following changes from the plans and specifications or do the following described work not included in the plans and specifications for this contract. ***NOTE: This change order is not effective until approved by the Engineer.***

Description of work to be done, estimate of quantities and prices to be paid. (Segregate between additional work at contract price, agreed price and force account.) Unless otherwise stated, rates for rental of equipment cover only such time as equipment is actually used and no allowance will be made for idle time. This last percentage shown is the net accumulated increase or decrease from the original quantity in the Engineer's Estimate.

Extra Work at Unit Price:

Provide for additional nighttime lane closures of the Westbound upper deck (WD1 Line) and Eastbound lower deck (ED1 Line) as allowed under Sheet No. 2 of the original Change Order No. 240 and as determined by the Engineer.

For this work, the Contractor shall be compensated the following agreed unit prices for each individual deck closure provided:

Monday Night through Thursday Night Closures 42 EA @ $3,620.00 /EA =$152,040.00
Friday Night Closure 10EA @ $4,210.00 /EA =$42,100.00
Saturday, Sunday and Holiday Night Closures 20 EA @ $5,240.00 /EA =$104,800.00

These unit prices constitute full compensation, including all markups, for the lane closures provided under this change order.

Estimated cost of Extra Work at Agreed Unit Price $298,940.00

Estimated Cost: Increase ☑ Decrease ☐ **$298,940.00**

By reason of this order the time of completion will be adjusted as follows: 0 days

Submitted by

Signature	Resident Engineer	Date
	BILL CASEY	2-26-10

Approval Recommended by

Signature	Area Construction Manager	Date
Deanna Vilcheck	DEANNA VILCHECK	3/2/10

Engineer Approval by

Signature	SFOBB Construction Manager	Date
Mike Forner	MIKE FORNER	3/22/2010

We the undersigned contractor, have given careful consideration to the change proposed and agree, if this proposal is approved, that we will provide all equipment, furnish the materials, except as may otherwise be noted above, and perform all services necessary for the work above specified, and will accept as full payment therefor the prices shown above.

NOTE: If you, the contractor, do not sign acceptance of this order, your attention is directed to the requirements of the specifications as to proceeding with the ordered work and filing a written protest within the time therein specified.

Contractor Acceptance by

Signature	(Print name and title)	Date
	DANIEL E. HENRICK, PRESIDENT	3/18/10

STATE OF CALIFORNIA - DEPARTMENT OF TRANSPORTATION

CONTRACT CHANGE ORDER

Change Requested by: Engineer

CCO: 240	Suppl. No. 2	Contract No. 04 - 0120R4	Road SF-80-12.6/13.2	FED. AID LOC.:

To: CC MYERS INC

You are directed to make the following changes from the plans and specifications or do the following described work not included in the plans and specifications for this contract. ***NOTE: This change order is not effective until approved by the Engineer.***

Description of work to be done, estimate of quantities and prices to be paid. (Segregate between additional work at contract price, agreed price and force account.) Unless otherwise stated, rates for rental of equipment cover only such time as equipment is actually used and no allowance will be made for idle time. This last percentage shown is the net accumulated increase or decrease from the original quantity in the Engineer's Estimate.

Extra Work at Unit Price:

Provide for additional nighttime lane closures of the Westbound upper deck (WD1 Line) and Eastbound lower deck (ED1 Line) as allowed under Sheet No. 2 of the original Change Order No. 240 and as determined by the Engineer.

For this work, the Contractor shall be compensated the following agreed unit prices for each individual deck closure provided:

Monday Night through Thursday Night Closures 68 EA @ $3,620.00 /EA =$246,160.00
Friday Night Closure 16 EA @ $4,210.00 /EA =$ 67,360.00
Saturday, Sunday and Holiday Night Closures 34 EA @ $5,240.00 /EA =$178,160.00

These unit prices constitute full compensation, including all markups, for the lane closures provided under this change order.

Cost of Extra Work at Agreed Unit Price $491,680.00

RECEIVED 01 JUN 23 PM 1:31

01 JUN 23 PM 1:38 RECEIVED

Estimated Cost: Increase ☑ Decrease ☐ **$491,680.00**

By reason of this order the time of completion will be adjusted as follows: 0 days

Signature Deanna Vilcheck	**Resident Engineer** JEANNIE BALDERRAMOS	**Date** 4/9/10
Signature Deanna Vilcheck	**Area Construction Manager** DEANNA VILCHECK	**Date** 4/9/10
Signature Michael Fam SFOBB	~~Area~~ **Construction Manager** ~~DEANNA VILCHECK~~ MIKE FORNEL	**Date** 5/17/10

We the undersigned contractor, have given careful consideration to the change proposed and agree, if this proposal is approved, that we will provide all equipment, furnish the materials, except as may otherwise be noted above, and perform all services necessary for the work above specified, and will accept as full payment therefor the prices shown above.

NOTE: If you, the contractor, do not sign acceptance of this order, your attention is directed to the requirements of the specifications as to proceeding with the ordered work and filing a written protest within the time therein specified.

Signature	**(Print name and title)** DANIEL E. HANCK, PRESIDENT	**Date** 5/2/10

STATE OF CALIFORNIA - DEPARTMENT OF TRANSPORTATION

CONTRACT CHANGE ORDER MEMORANDUM

TO: MIKE FORNER / DEANNA VILCHECK DV	FILE: E.A. 04 - 0120R4
	CO-RTE-PM SF-80-12.6/13.2
FROM: JEANNIE BALDERRAMOS	FED. NO.
CCO#: 240 SUPPLEMENT#: 2 Category Code: CXTG	CONTINGENCY BALANCE (incl. this change) $35,545,994.59
COST: $491,680.00 INCREASE ☑ DECREASE ☐	HEADQUARTERS APPROVAL REQUIRED? ☑ YES ☐ NO
SUPPLEMENTAL FUNDS PROVIDED: $0.00	IS THIS REQUEST IN ACCORDANCE WITH ENVIRONMENTAL DOCUMENTS? ☑ YES ☐ NO
CCO DESCRIPTION: Mainline Traffic Closures	PROJECT DESCRIPTION: CONSTRUCT ROUTE 80 TEMP BYPASS STRUCTURE

Original Contract Time:	Time Adj. This Change:	Previously Approved CCO Time Adjustments:	Percentage Time Adjusted: (including this change)	Total # of Unreconciled Deferred Time CCO(s): (including this change)
475 Day(s)	0 Day(s)	1660 Day(s)	349 %	0

THIS CHANGE ORDER PROVIDES FOR:
Additional nightly lane closures of the mainline upper and lower decks.

This project provides for the construction of a detour of the mainline eastbound and westbound I-80 traffic that will allow for the tie in of the new east span of the San Francisco Oakland Bay Bridge to Yerba Buena Island. The detour, which spans approximately 650 meters, is comprised of a double deck steel truss bridge which transitions to a concrete and roadway structure as it approaches the Yerba Buena Island tunnel.

Two separate Department strategy memorandums, dated December 14, 2006 and December 25, 2006, approved by Tony Anziano - Toll Bridge Program Manager and Richard Land - Chief Engineer, recommended that the Department assume responsibility for the designs of the East Tie-In (ETI) and West Tie-In (WTI) portions of this contract, and incorporated seismic retrofit work of the permanent Yerba Buena Island Transition Structure (YBITS) onto this project.

The detour opened to traffic in September of 2009 and experienced elevated traffic incidents over the first several months of its operation. Project Development requested that lane closures be implemented on both the upper and lower decks in order to regulate the nighttime flow of traffic and allow speed enforcement measures to be provided on the mainline detour by the California Highway Patrol.

The original Change Order No. 240 provided for these lane closures over a 4-month time period in order to allow for additional warning signing and pavement delineations to be installed. Change Order No. 1, Supplement No. 1 provided an additional 5 weeks of closures based on a determination by the Toll Bridge Program Oversight Committee (TBPOC).

The TBPOC, during their April 1, 2010 meeting, has determined that the lane closures should now be extended an additional 8 weeks in order to allow additional time for the Department to study the feasibility of ending the closures. This change order provides for this addition 8 weeks of closures.

Lane closure charts have been provided by Traffic Operations for this work and were included under the original Change Order No. 240. The charts provide for the closure of 1 to 4 lanes of the 5 lane roadway. Each of the two decks will be closed on a nightly basis.

The cost associated with this work shall be compensated as extra work at agreed unit prices for each deck closure provided at an estimated cost of $491,680.00 which shall be financed from the contract's contingency funds. A cost analysis is on file.

No adjustment of contract time is warranted as the work will not affect the controlling operation.

This change was concurred with by Ken Terpstra - Project Manager, and Jaime Gutierrez - Project Engineer.

Maintenance concurrence is not required as this change doesn't affect any permanent roadway features.

ADA Notice: For individuals with sensory disabilities, this document is available in alternate formats. For information call: (916) 654-6410 or TDD (916) 654-3880 or write Records and Forms Management, 1120 N Street, MS-89, Sacramento, CA 95814.

CONCURRED BY:		
Construction Engineer:	Jeannie Balderramos, RE DN	Date 4/9/10
Bridge Engineer:	Bill Casey, Bridge Engineer DJ	Date 5/17/10
Project Engineer:	Jaime Gutierrez, PE	Date 4/12/10
Project Manager:	Ken Terpstra, PM	Date 4/12/10
FHWA Rep.:		Date
Environmental:		Date
Other (specify):	Mohan Ayadurai, Struct. Rep.	Date 4/20/10
Other (specify):		Date
District Prior Approval By:		Date
HQ (Issue Approve) By:	Larry Salhaney, HQ CCO Engine	Date 4/15/10
Resident Engineer's Signature: Deanna Villeneuve		Date 4/9/10

ESTIMATE OF COST

	THIS REQUEST	TOTAL TO DATE
ITEMS	$0.00	$0.00
FORCE ACCOUNT	$0.00	$0.00
AGREED PRICE	$491,680.00	$1,738,660.00
ADJUSTMENT	$0.00	$0.00
TOTAL	$491,680.00	$1,738,660.00

FEDERAL PARTICIPATION

☐ PARTICIPATING ☐ PARTICIPATING IN PART ☑ NONE
☐ NON-PARTICIPATING (MAINTENANCE) ☐ NON-PARTICIPATING

FEDERAL SEGREGATION (if more than one Funding Source or P.I.P. type)
☐ CCO FUNDED PER CONTRACT ☐ CCO FUNDED AS FOLLOWS

FEDERAL FUNDING SOURCE	PERCENT

ADA Notice: For individuals with sensory disabilities, this document is available in alternate formats. For information call: (916) 654-6410 or TDD (916) 654-3880 or write Records and Forms Management, 1120 N Street, MS-89, Sacramento, CA 95814.

STATE OF CALIFORNIA - DEPARTMENT OF TRANSPORTATION

CONTRACT CHANGE ORDER

Change Requested by: Engineer

CCO: 240	Suppl. No. 3	Contract No. 04 - 0120R4	Road SF-80-12.6/13.2	FED. AID LOC.:

To: **CC MYERS INC**

You are directed to make the following changes from the plans and specifications or do the following described work not included in the plans and specifications for this contract. ***NOTE: This change order is not effective until approved by the Engineer.***

Description of work to be done, estimate of quantities and prices to be paid. (Segregate between additional work at contract price, agreed price and force account.) Unless otherwise stated, rates for rental of equipment cover only such time as equipment is actually used and no allowance will be made for idle time. This last percentage shown is the net accumulated increase or decrease from the original quantity in the Engineer's Estimate.

Extra Work at Unit Price:

Provide for additional nighttime lane closures of the Westbound upper deck (WD1 Line) and Eastbound lower deck (ED1 Line) as allowed under Sheet No. 2 of the original Change Order No. 240 and as determined by the Engineer.

For this work, the Contractor shall be compensated the following agreed unit prices for each individual deck closure provided:

Monday Night through Thursday Night Closures 40 EA @ $3,620.00 /EA =$144,800.00
Friday Night Closure 10 EA @ $4,210.00 /EA =$ 42,100.00
Saturday, Sunday and Holiday Night Closures 20 EA @ $5,240.00 /EA =$104,800.00

These unit prices constitute full compensation, including all markups, for the lane closures provided under this change order.

Estimated Cost of Extra Work at Unit Price - $291,700.00

Estimated Cost: **Increase** ☑ **Decrease** ☐ **$291,700.00**

By reason of this order the time of completion will be adjusted as follows: 0 days

Submitted by

Signature	Resident Engineer	Date
Jeannie Balderrama	JEANNIE BALDERRAMOS	6/24/10

Approval Recommended by

Signature	Area Construction Manager	Date
Deanna Vilcheck	DEANNA VILCHECK	6/24/10

Engineer Approval by

Signature	SFOBB Construction Manager	Date
Michael Forner	MIKE FORNER	7/14/10

We the undersigned contractor, have given careful consideration to the change proposed and agree, if this proposal is approved, that we will provide all equipment, furnish the materials, except as may otherwise be noted above, and perform all services necessary for the work above specified, and will accept as full payment therefor the prices shown above.

NOTE: If you, the contractor, do not sign acceptance of this order, your attention is directed to the requirements of the specifications as to proceeding with the ordered work and filing a written protest within the time therein specified.

Contractor Acceptance by

Signature	(Print name and title)	Date
	Daniel E. Himick, President	7-6-2010

CONTRACT CHANGE ORDER

Change Requested by: Engineer

CCO: 241	Suppl. No. 0	Contract No. 04 - 0120R4	Road SF-80-12.6/13.2	FED. AID LOC.:

To: CC MYERS INC

You are directed to make the following changes from the plans and specifications or do the following described work not included in the plans and specifications for this contract. ***NOTE: This change order is not effective until approved by the Engineer.***

Description of work to be done, estimate of quantities and prices to be paid. (Segregate between additional work at contract price, agreed price and force account.) Unless otherwise stated, rates for rental of equipment cover only such time as equipment is actually used and no allowance will be made for idle time. This last percentage shown is the net accumulated increase or decrease from the original quantity in the Engineer's Estimate.

Modify the drainage system from Bent W7 of the Yerba Buena Island Transition Structure (Br. No. 34-0006L/R) as shown on Pages No. 2 through 3 of this change order.

Adjustment of Compensation at Lump Sum:

Provide compensation to the Contractor for all additional costs incurred due to the modifications to the drainage system from Bent W7 incorporated under this change order. For this work, the Contractor shall be compensated an agreed lump sum of $141,630.00 which constitutes full and final compensation, including all markups, for all additional costs incurred.

Adjustment of Compensation at Lump Sum $141,630.00

4b

Estimated Cost: Increase ☑ Decrease ☐ **$141,630.00**

By reason of this order the time of completion will be adjusted as follows: 0 days

Submitted by

Signature	Resident Engineer	Date
Deanna Vilcheck	for BILL CASEY	2/11/10

Approval Recommended by

Signature	Area Construction Manager	Date
Deanna Vilcheck	DEANNA VILCHECK	2/11/10

Engineer Approval by

Signature	Area Construction Manager	Date
Deanna Vilcheck	DEANNA VILCHECK	3/22/10

We the undersigned contractor, have given careful consideration to the change proposed and agree, if this proposal is approved, that we will provide all equipment, furnish the materials, except as may otherwise be noted above, and perform all services necessary for the work above specified, and will accept as full payment therefor the prices shown above.

NOTE: If you, the contractor, do not sign acceptance of this order, your attention is directed to the requirements of the specifications as to proceeding with the ordered work and filing a written protest within the time therein specified.

Contractor Acceptance by

Signature	(Print name and title)	Date
[signature]	DANIEL E. HIMICK, PRESIDENT	3/5/10

CONTRACT NO 04-0120R4

CONTRACT CHANGE ORDER NO 241

SHEET 2 of 3

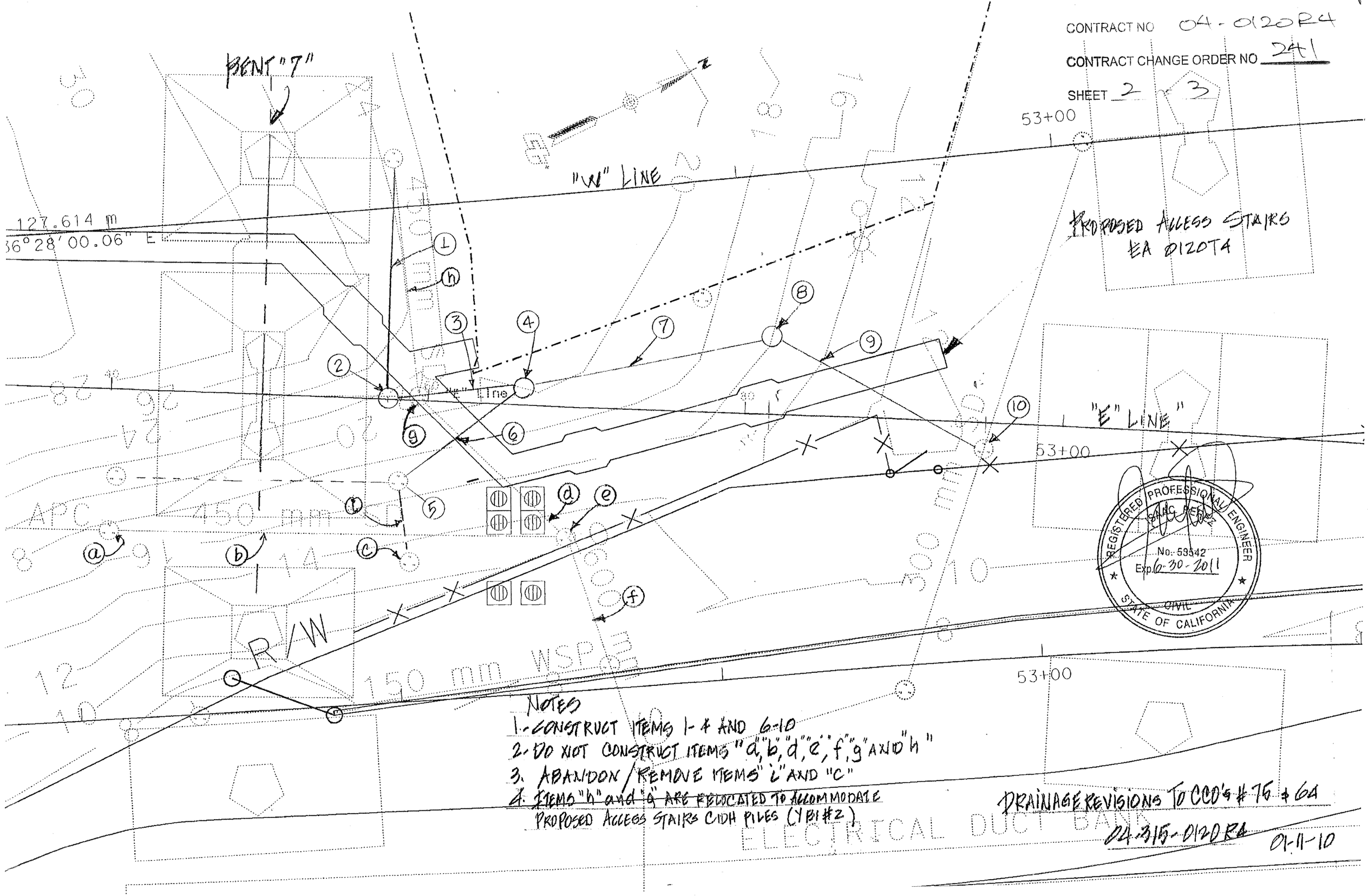

NOTES

1. CONSTRUCT ITEMS 1-4 AND 6-10
2. DO NOT CONSTRUCT ITEMS "a", "b", "d", "e", "f", "g" AND "h"
3. ABANDON / REMOVE ITEMS "i" AND "c"
4. ~~ITEMS "h" and "g" ARE RELOCATED TO ACCOMMODATE~~ PROPOSED ACCESS STAIRS CIDH PILES (YB1#2)

DRAINAGE REVISIONS TO CCO's # 75 & 64

04-315-0120R4

01-11-10

REGISTERED PROFESSIONAL ENGINEER
No. 53542
Exp. 6-30-2011
CIVIL
STATE OF CALIFORNIA

CONTRACT NO. 04-0120R4

CONTRACT CHANGE ORDER NO 241

SHEET 3 OF 3

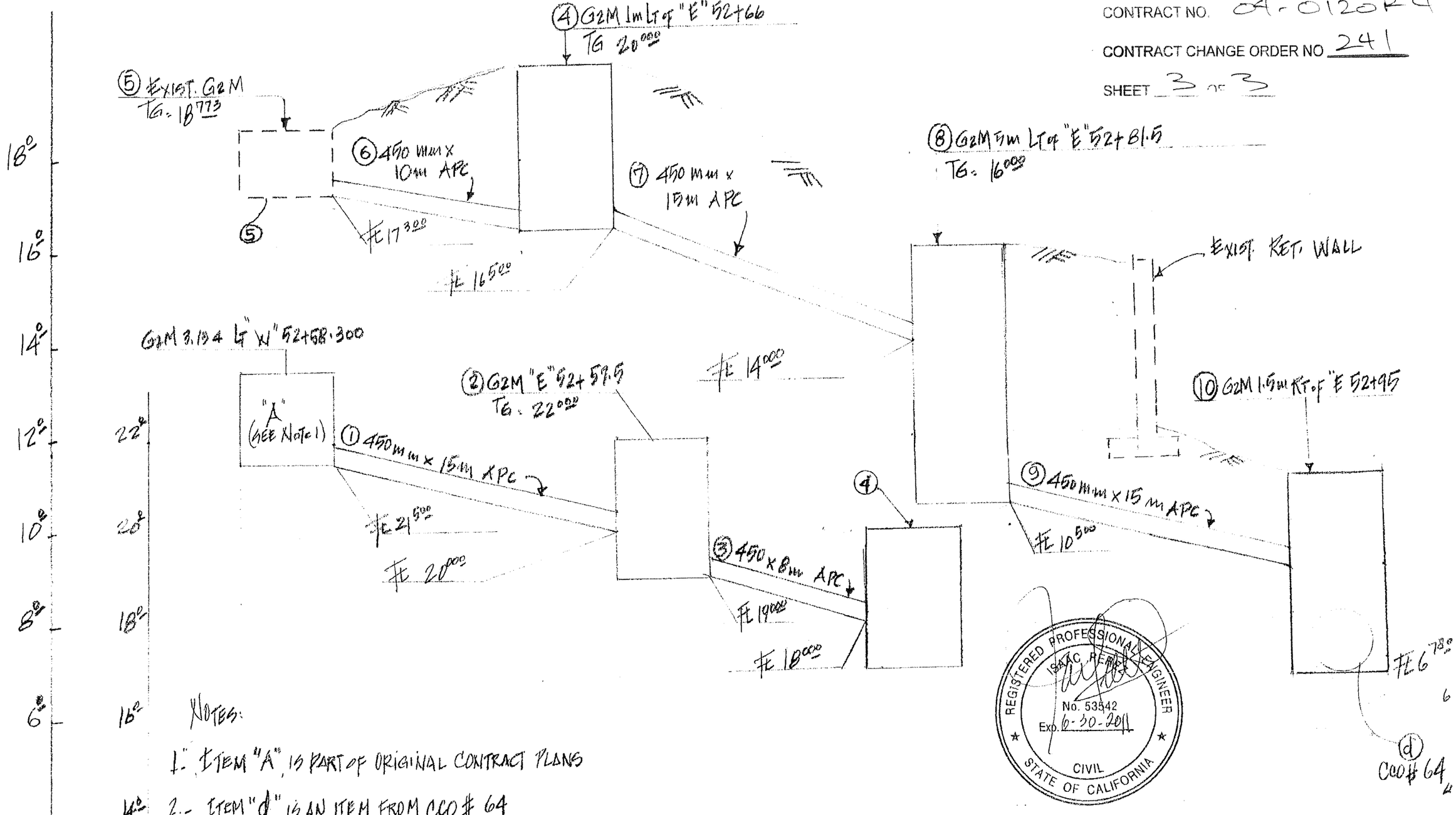

NOTES:

1.- ITEM "A", IS PART OF ORIGINAL CONTRACT PLANS

2.- ITEM "d" IS AN ITEM FROM CCO # 64

REGISTERED PROFESSIONAL ENGINEER
ISAAC REYES
No. 53542
Exp. 6-30-2011
CIVIL
STATE OF CALIFORNIA

DRAINAGE REVISIONS TO CCOs # 75 & 64

04-315-0120R4 01-11-10

STATE OF CALIFORNIA - DEPARTMENT OF TRANSPORTATION

CONTRACT CHANGE ORDER

Change Requested by: Engineer

CCO: 243	Suppl. No. 0	Contract No. 04 - 0120R4	Road SF-80-12.6/13.2	FED. AID LOC.:

To: **CC MYERS INC**

You are directed to make the following changes from the plans and specifications or do the following described work not included in the plans and specifications for this contract. ***NOTE: This change order is not effective until approved by the Engineer.***

Description of work to be done, estimate of quantities and prices to be paid. (Segregate between additional work at contract price, agreed price and force account.) Unless otherwise stated, rates for rental of equipment cover only such time as equipment is actually used and no allowance will be made for idle time. This last percentage shown is the net accumulated increase or decrease from the original quantity in the Engineer's Estimate.

Adjustment of Compensation at Lump Sum:

Provide compensation to the Contractor for all additional costs incurred on the construction of the West Tie-In (WTI) portion of the Temporary Bypass Structure (Bridge No. 34-0006 (TEMP)) due to the Department's delay in the approval of the WTI jacking plan.

For this work, the Contractor shall be compensated an agreed lump sum of $22,510.00 which constitutes full and final compensation, including all markups, for all outstanding costs incurred.

Adjustment of Compensation at Lump Sum $22,510.00

Estimated Cost: Increase ☑ Decrease ☐ **$22,510.00**

By reason of this order the time of completion will be adjusted as follows: 0 days

Submitted by

Signature	Resident Engineer JEANNIE BALDERRAMOS	Date 4-27-10

Approval Recommended by

Signature	Area Construction Manager DEANNA VILCHECK	Date 4/29/10

Engineer Approval by

Signature	Area Construction Manager DEANNA VILCHECK	Date 5/19/10

We the undersigned contractor, have given careful consideration to the change proposed and agree, if this proposal is approved, that we will provide all equipment, furnish the materials, except as may otherwise be noted above, and perform all services necessary for the work above specified, and will accept as full payment therefor the prices shown above.

NOTE: If you, the contractor, do not sign acceptance of this order, your attention is directed to the requirements of the specifications as to proceeding with the ordered work and filing a written protest within the time therein specified.

Contractor Acceptance by

Signature	(Print name and title) STEVE FRANCIS CHIEF ESTIMATOR	Date 5.18.10

STATE OF CALIFORNIA - DEPARTMENT OF TRANSPORTATION

CONTRACT CHANGE ORDER

Change Requested by: Engineer

CCO: 244	Suppl. No. 0	Contract No. 04 - 0120R4	Road SF-80-12.6/13.2	FED. AID LOC.:

To: **CC MYERS INC**

You are directed to make the following changes from the plans and specifications or do the following described work not included in the plans and specifications for this contract. ***NOTE: This change order is not effective until approved by the Engineer.***

Description of work to be done, estimate of quantities and prices to be paid. (Segregate between additional work at contract price, agreed price and force account.) Unless otherwise stated, rates for rental of equipment cover only such time as equipment is actually used and no allowance will be made for idle time. This last percentage shown is the net accumulated increase or decrease from the original quantity in the Engineer's Estimate.

Extra Work at Lump Sum:

Provide for the additional concrete removal at Bent 48 and Pier YB-1 (Br. No. 34-0004) as shown on Pages No. 2 through 3 of this change order.

For this work, the Contractor shall be compensated an agreed lump sum of $27,180.00 which constitutes full and final compensation, including all markups, for all additional costs incurred.

Cost of Extra Work at Lump Sum $27,180.00

Estimated Cost: Increase ☑ Decrease ☐ **$27,180.00**

By reason of this order the time of completion will be adjusted as follows: 0 days

Signature	Resident Engineer	Date
Jeannie Balderramos	JEANNIE BALDERRAMOS	5-14-10

Signature	Area Construction Manager	Date
Deanna Vilcheck	DEANNA VILCHECK	5/17/10

Signature	Area Construction Manager	Date
Deanna Vilcheck	DEANNA VILCHECK	6/28/10

We the undersigned contractor, have given careful consideration to the change proposed and agree, if this proposal is approved, that we will provide all equipment, furnish the materials, except as may otherwise be noted above, and perform all services necessary for the work above specified, and will accept as full payment therefor the prices shown above.

NOTE: If you, the contractor, do not sign acceptance of this order, your attention is directed to the requirements of the specifications as to proceeding with the ordered work and filing a written protest within the time therein specified.

Signature	(Print name and title)	Date
	Steve Francis, Chief Estimator	6-18-10

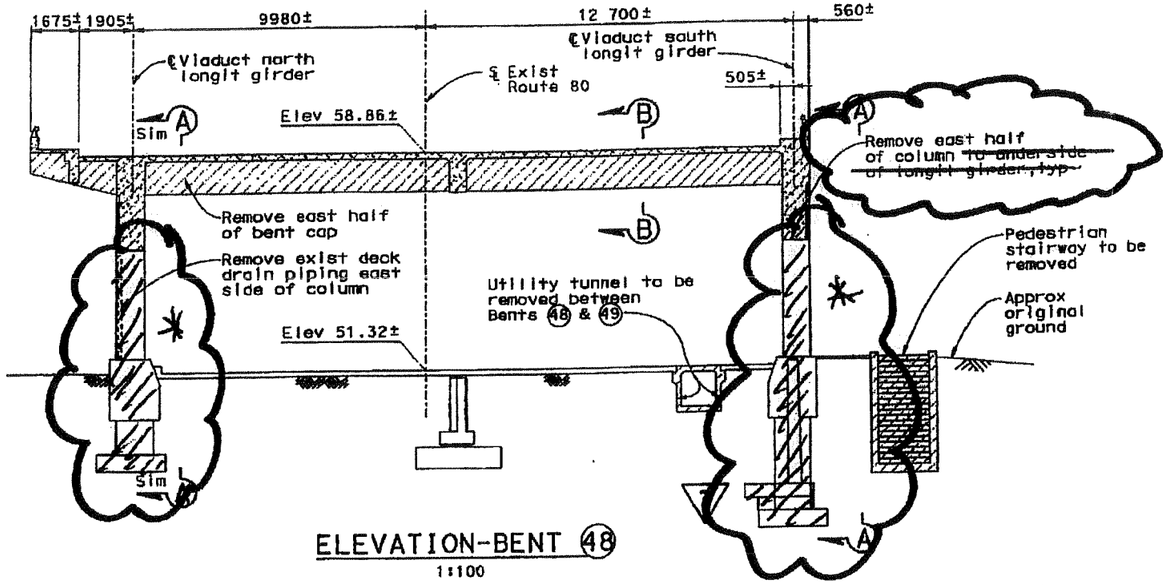

ELEVATION-BENT 48
1:100

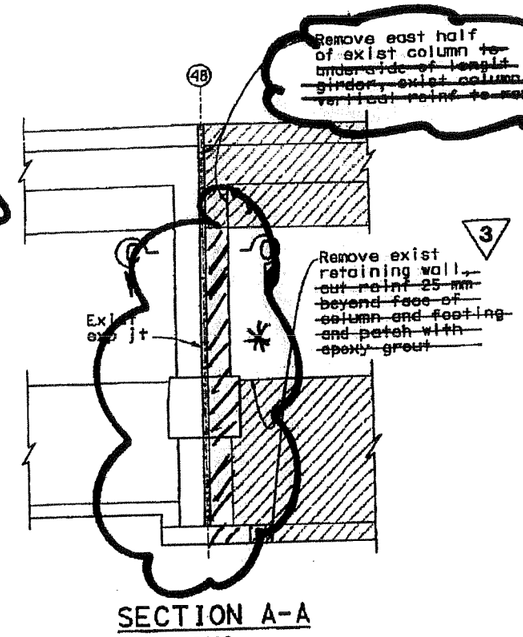

SECTION A-A
1:100

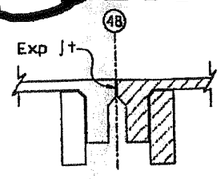

SECTION B-B
1:50

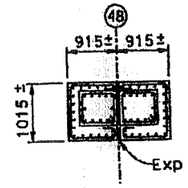

SECTION C-C
1:50

LEGEND

3 Indicates limits of ~~structure~~ Bridge removal

04	SF	80	12.6/13.2	164	193

2-18-03
REGISTERED CIVIL ENGINEER

3-31-03
PLANS APPROVAL DATE

The State of California or its officers or agents shall not be responsible for the accuracy or completeness of electronic copies of this plan sheet.

REGISTERED PROFESSIONAL ENGINEER JUAN A. MURILLO No. C051722 Exp. 6-30-05 CIVIL STATE OF CALIFORNIA

Parsons Brinckerhoff Quade & Douglas, Inc.
303 Second Street, Suite 700N
San Francisco, CA 94107

Caltrans now has a web site! To get to the web site, go to: http://www.dot.ca.gov

REGISTERED PROFESSIONAL ENGINEER MICHAEL E. WHITESIDE No. C047977 Exp. 12/31/11 CIVIL STATE OF CALIFORNIA

* Additional Concrete Removal

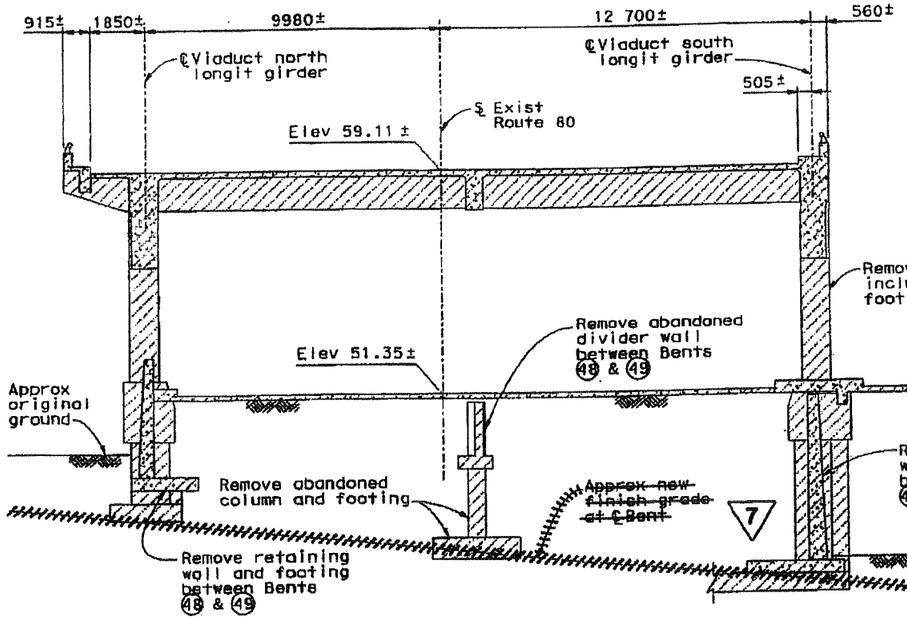

ELEVATION-BENT 49
1:100

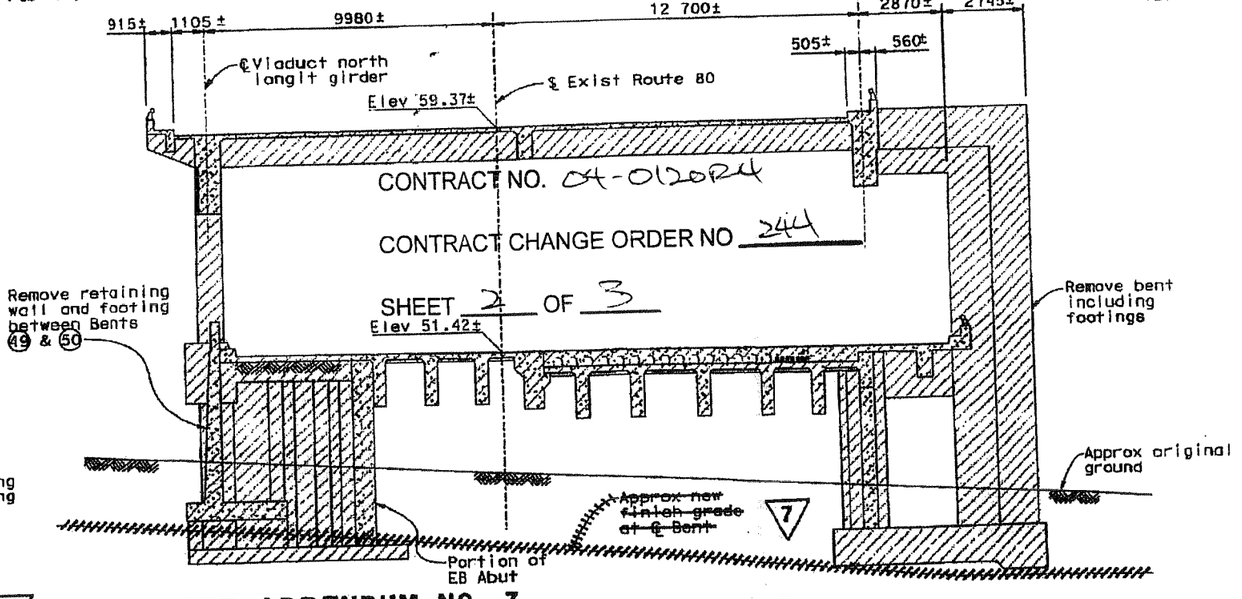

ELEVATION-BENT 50
1:100

7 REVISED PER ADDENDUM NO. 7 DATED AUGUST 4, 2003

3 REVISED PER ADDENDUM NO. 3 DATED JUNE 6, 2003

ALL DIMENSIONS ARE IN MILLIMETERS UNLESS OTHERWISE SHOWN

DESIGN OVERSIGHT
SIGN OFF DATE

DESIGN	BY NA	CHECKED NA	PREPARED FOR THE STATE OF CALIFORNIA DEPARTMENT OF TRANSPORTATION	Juan A. Murillo PROJECT ENGINEER
DETAILS	BY NA	CHECKED NA		
QUANTITIES	BY E. Stassevitch	CHECKED NA		CU 04251

SAN FRANCISCO OAKLAND BAY BRIDGE EAST SPAN SEISMIC SAFETY PROJECT

TEMPORARY BYPASS STRUCTURES

BRIDGE REMOVAL 48 TO YB-1 - DETAILS NO.

BRIDGE NO. | KILOMETER POST | ELEMENT | EA | FUNCTIONAL CLASS | DESIGN EXCEPTION | REVISION DATES (PRELIMINARY STAGE ONLY) | SHEET | OF

ELEMENT: 1 Temporary Bypass Structures
EA: 0412U0
FUNCTIONAL CLASS: Freeway
DESIGN EXCEPTION: No

C:\projects\0412U0\Working\d04-0120r1-add\Str\Tem\01den.dgn

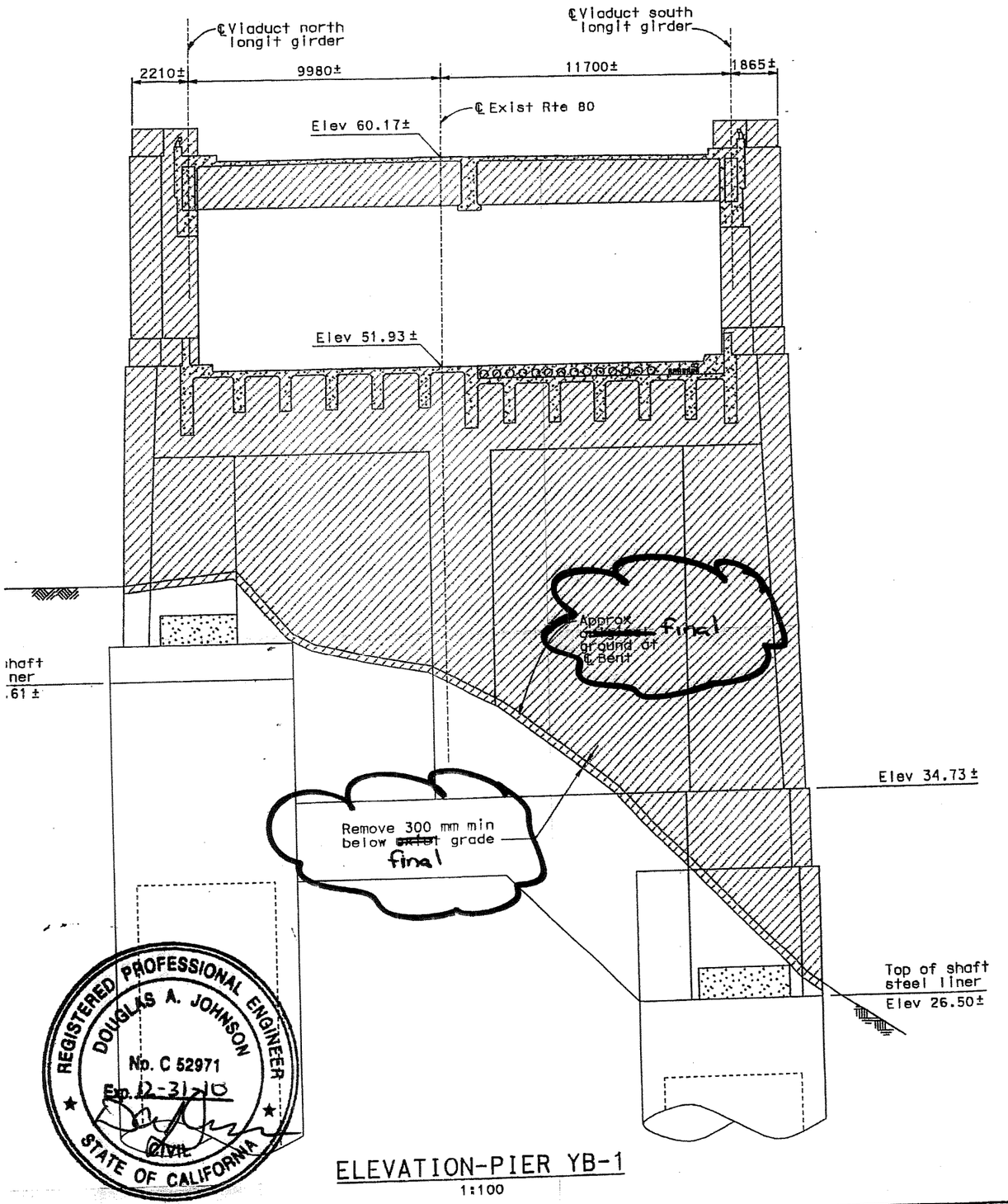

ELEVATION-PIER YB-1

1:100

DESIGN	BY NA	CHECKED NA	PREPARE		
DETAILS	BY NA	CHECKED NA	STATE OF		
QUANTITIES	BY E. Stassevitch	CHECKED NA	DEPARTMENT OF		

METRIC (REV. 3/1/99)

ORIGINAL SCALE IN MILLIMETERS FOR REDUCED PLANS 0 10 20 30 40 50

CONTRACT NO. 04-0120R4

CONTRACT CHANGE ORDER NO 244

SHEET 3 OF 3

STATE OF CALIFORNIA - DEPARTMENT OF TRANSPORTATION

CONTRACT CHANGE ORDER

Change Requested by: Engineer

CCO: 244	Suppl. No. 1	Contract No. 04 - 0120R4	Road SF-80-12.6/13.2	FED. AID LOC.:

To: **CC MYERS INC**

You are directed to make the following changes from the plans and specifications or do the following described work not included in the plans and specifications for this contract. ***NOTE: This change order is not effective until approved by the Engineer.***

Description of work to be done, estimate of quantities and prices to be paid. (Segregate between additional work at contract price, agreed price and force account.) Unless otherwise stated, rates for rental of equipment cover only such time as equipment is actually used and no allowance will be made for idle time. This last percentage shown is the net accumulated increase or decrease from the original quantity in the Engineer's Estimate.

Extra Work at Force Account:

As directed by the Engineer, perform supplemental concrete removal for the remainder of Bent 48 (Bridge No. 34-0004) as shown on page 2 of this change order.

This work will be paid for in accordance with Section 5-1.24 "Force Account Payment" of the Special Provisions.

Estimated Cost of Extra Work at Force Account $75,000.00

Estimated Cost: Increase ☑ Decrease ☐ $75,000.00

By reason of this order the time of completion will be adjusted as follows: 0 days

Submitted by		
Signature Jeannie Balderramos	Resident Engineer JEANNIE BALDERRAMOS	Date 6/24/10
Approval Recommended by		
Signature Deanna Vilcheck	Area Construction Manager DEANNA VILCHECK	Date 6/25/10
Engineer Approval by		
Signature Deanna Vilcheck	Area Construction Manager DEANNA VILCHECK	Date 7/14/10

We the undersigned contractor, have given careful consideration to the change proposed and agree, if this proposal is approved, that we will provide all equipment, furnish the materials, except as may otherwise be noted above, and perform all services necessary for the work above specified, and will accept as full payment therefor the prices shown above.

NOTE: If you, the contractor, do not sign acceptance of this order, your attention is directed to the requirements of the specifications as to proceeding with the ordered work and filing a written protest within the time therein specified.

Contractor Approved by		
Signature	(Print name and title) **Steve Francis, Chief Estimator**	Date 7.1.10

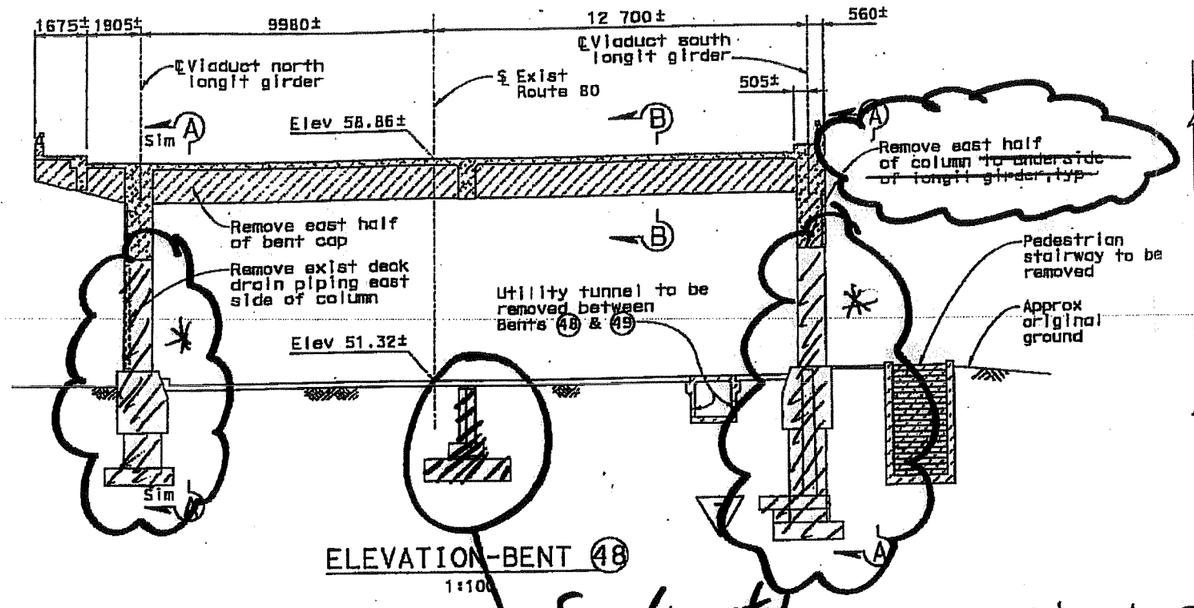

ELEVATION-BENT 48
1:100

Supplemental Concrete Removal

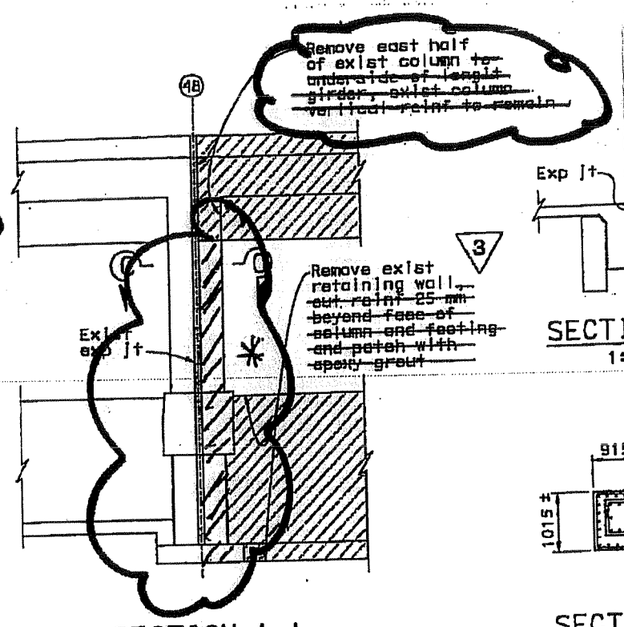

SECTION A-A
1:100

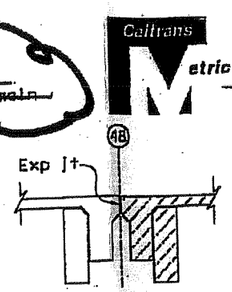

SECTION B-B
1:50

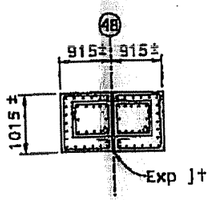

SECTION C-C
1:50

LEGEND

3 — Indicates limits of Bridge ~~structure~~ removal

* Additional Concrete Removal

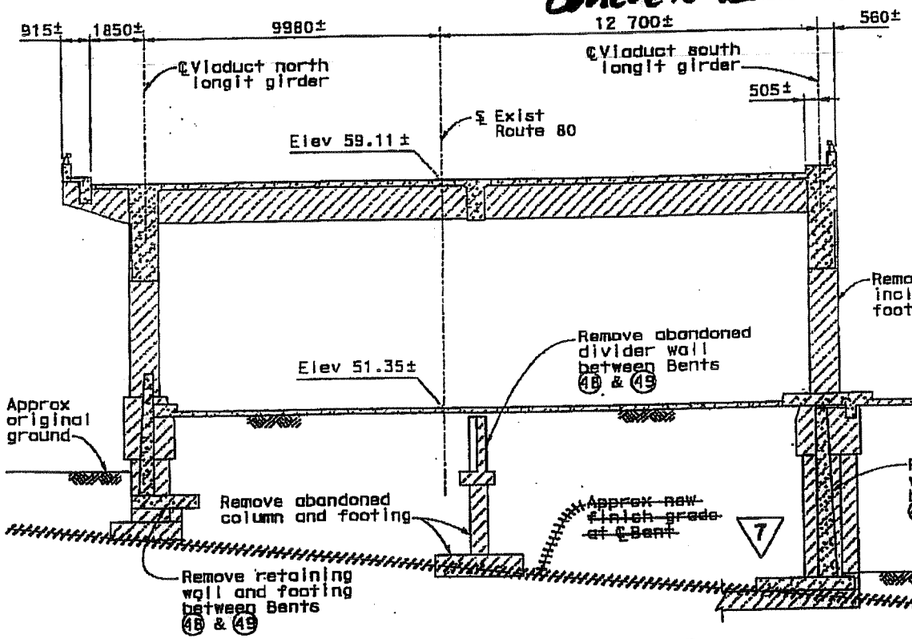

ELEVATION-BENT 49
1:100

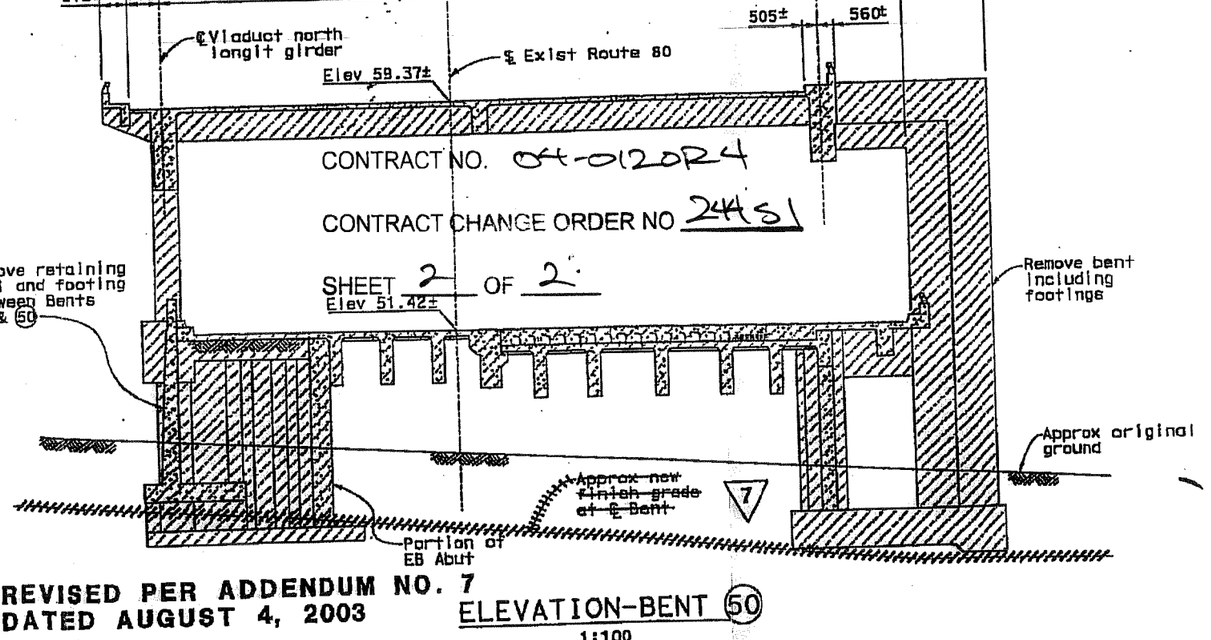

ELEVATION-BENT 50
1:100

7 REVISED PER ADDENDUM NO. 7 DATED AUGUST 4, 2003

3 REVISED PER ADDENDUM NO. 3 DATED JUNE 6, 2003

ALL DIMENSIONS ARE IN MILLIMETERS UNLESS OTHERWISE SHOWN

04	SF	80	12.6/13.2	164	193

Caltrans Metric

2-18-03
REGISTERED CIVIL ENGINEER

REGISTERED PROFESSIONAL ENGINEER — JUAN A. MURILLO — No. C051722 — Exp. 6-30-05 — CIVIL — STATE OF CALIFORNIA

3-31-03
PLANS APPROVAL DATE

The State of California or its officers or agents shall not be responsible for the accuracy or completeness of electronic copies of this plan sheet.

Parsons Brinckerhoff Quade & Douglas, Inc.
303 Second Street, Suite 700N
San Francisco, CA 94107

Caltrans now has a web site! To get to the web site, go to: http://www.dot.ca.gov

REGISTERED PROFESSIONAL ENGINEER — MICHAEL E. WHITESIDE — No. C047977 — Exp. 12/31/11 — CIVIL — STATE OF CALIFORNIA

CONTRACT NO. 04-0120R4

CONTRACT CHANGE ORDER NO 24451

SHEET 2 OF 2

DESIGN OVERSIGHT

SIGN OFF DATE

DESIGN DETAIL SHEET SHEETS REV. 3/1/01

	BY	CHECKED
DESIGN	NA	NA
DETAILS	NA	NA
QUANTITIES	E. Stassevitch	NA

ORIGINAL SCALE IN MILLIMETERS FOR MEDIUMS PLANS 0 10 20 30 40 50 60 70 80 90 100

PREPARED FOR THE STATE OF CALIFORNIA DEPARTMENT OF TRANSPORTATION

Juan A. Murillo
PROJECT ENGINEER

CU 04251
EA 0120R1

SAN FRANCISCO OAKLAND BAY BRIDGE EAST SPAN SEISMIC SAFETY PROJECT

TEMPORARY BYPASS STRUCTURES

BRIDGE REMOVAL 48 TO YB-1 - DETAILS NO.

BRIDGE NO.
KILOMETER POST
REVISIONS MARKED (PRELIMINARY STAGE ONLY)
SHEET OF
BACKGROUND PRINTS BEARING EARLIER REVISION DATES

...\working\04\04-0120r1-addVer1\tbant01dgn.dgn

STATE OF CALIFORNIA - DEPARTMENT OF TRANSPORTATION

CONTRACT CHANGE ORDER

Change Requested by: Engineer

CCO: 245	Suppl. No. 0	Contract No. 04 - 0120R4	Road SF-80-12.6/13.2	FED. AID LOC.:

To: CC MYERS INC

You are directed to make the following changes from the plans and specifications or do the following described work not included in the plans and specifications for this contract. ***NOTE: This change order is not effective until approved by the Engineer.***

Description of work to be done, estimate of quantities and prices to be paid. (Segregate between additional work at contract price, agreed price and force account.) Unless otherwise stated, rates for rental of equipment cover only such time as equipment is actually used and no allowance will be made for idle time. This last percentage shown is the net accumulated increase or decrease from the original quantity in the Engineer's Estimate.

Extra Work at Lump Sum:

Furnish and install the sign illumination, including controller, conductors, photoelectric unit and fixtures and all appurtenances, for the overhead sign (Sign No. 25) on the upper deck of the Viaduct portion of the Temporary Bypass Structure (Bridge No. 34-0006 (TEMP). All work shall conform to plan sheet E-4B as issued by the Contractor.

For this work, the Contractor shall be compensated at an agreed lump sum of $5,220.00 which constitutes full compensation, including all markups, for all costs associated with this change.

Any lane closures required for the work of this change shall be provided under Change Order No. 240. The costs of these lane closures are excluded from this change order.

Cost of Extra Work at Lump Sum $5,220.00

Estimated Cost: Increase ☑ Decrease ☐ $5,220.00

By reason of this order the time of completion will be adjusted as follows: 0 days

Submitted by

Signature	Resident Engineer	Date
Jeannie Baldum	JEANNIE BALDERRAMOS	5-4-10

Approval Recommended by

Signature	Construction Engineer	Date
Jeannie Baldum	JEANNIE BALDERRAMOS	5-4-10

Engineer Approval by

Signature	Construction Engineer	Date
Jeannie Baldum	JEANNIE BALDERRAMOS	5-19-10

We the undersigned contractor, have given careful consideration to the change proposed and agree, if this proposal is approved, that we will provide all equipment, furnish the materials, except as may otherwise be noted above, and perform all services necessary for the work above specified, and will accept as full payment therefor the prices shown above.

NOTE: If you, the contractor, do not sign acceptance of this order, your attention is directed to the requirements of the specifications as to proceeding with the ordered work and filing a written protest within the time therein specified.

Contractor Acceptance by

Signature	(Print name and title)	Date
	STEVE FRANCIS, CHIEF ESTIMATOR	6-18-10

CONTRACT CHANGE ORDER

Change Requested by: Engineer

CCO: 246	Suppl. No. 0	Contract No. 04 - 0120R4	Road SF-80-12.6/13.2	FED. AID LOC.:

To: CC MYERS INC

You are directed to make the following changes from the plans and specifications or do the following described work not included in the plans and specifications for this contract. ***NOTE: This change order is not effective until approved by the Engineer.***

Description of work to be done, estimate of quantities and prices to be paid. (Segregate between additional work at contract price, agreed price and force account.) Unless otherwise stated, rates for rental of equipment cover only such time as equipment is actually used and no allowance will be made for idle time. This last percentage shown is the net accumulated increase or decrease from the original quantity in the Engineer's Estimate.

Extra Work at Lump Sum:

Furnish and install the 12 each rumble strip sets on the upper and lower decks of the San Francisco Oakland Bay Bridge as shown on Sheet No. 2 and 5 of this change order.

For this work, the Contractor shall be compensated an agreed lump sum of $146,160.00. Excluding the cost of providing lane closures, this lump sum constitutes full and final compensation, including all markups, for all costs associated with this work. This compensation also includes the cost of furnishing and installing the test rumble strips performed adjacent to Burma Road on December 2, 2009 as ordered by the Engineer.

Any lane closures required for the work of this change shall be provided under Change Order No. 240. The cost of furnishing and installing the advance warning signs as shown on Sheets No. 2 and 3 of this change order shall be paid under the previously issued Change Order No. 235. These costs are excluded from this change order.

Cost of Extra Work at Lump Sum $146,160.00

Estimated Cost: Increase ☑ Decrease ☐ **$146,160.00**

By reason of this order the time of completion will be adjusted as follows: 0 days

Submitted by		
Signature Jeannie Balderramos	**Resident Engineer** JEANNIE BALDERRAMOS	**Date** 5-4-10
Recommended by		
Signature Deanna Vilcheck	**Area Construction Manager** DEANNA VILCHECK	**Date** 5/4/10
Engineer Approved by		
Signature Deanna Vilcheck	**Area Construction Manager** DEANNA VILCHECK	**Date** 5/19/10

We the undersigned contractor, have given careful consideration to the change proposed and agree, if this proposal is approved, that we will provide all equipment, furnish the materials, except as may otherwise be noted above, and perform all services necessary for the work above specified, and will accept as full payment therefor the prices shown above.

NOTE: If you, the contractor, do not sign acceptance of this order, your attention is directed to the requirements of the specifications as to proceeding with the ordered work and filing a written protest within the time therein specified.

Contractor Acceptance by		
Signature	**(Print name and title)** DANIEL E. HOMICK, PRESIDENT	**Date** 5/18/10

CONTRACT NO. 04-012024
CONTRACT CHANGE ORDER NO. 24C
SHEET 2 OF 5

DIST	COUNTY	ROUTE	KILOMETER POST TOTAL PROJECT	SHEET NO	TOTAL SHEETS
04	SF	80	12.6/13.2	745	193

REGISTERED CIVIL ENGINEER

PLANS APPROVAL DATE

The State of California or its officers or agents shall not be responsible for the accuracy or completeness of electronic media of this plan sheet.

California now has a web site! To get to the web site, go to: http://www.dot.ca.gov

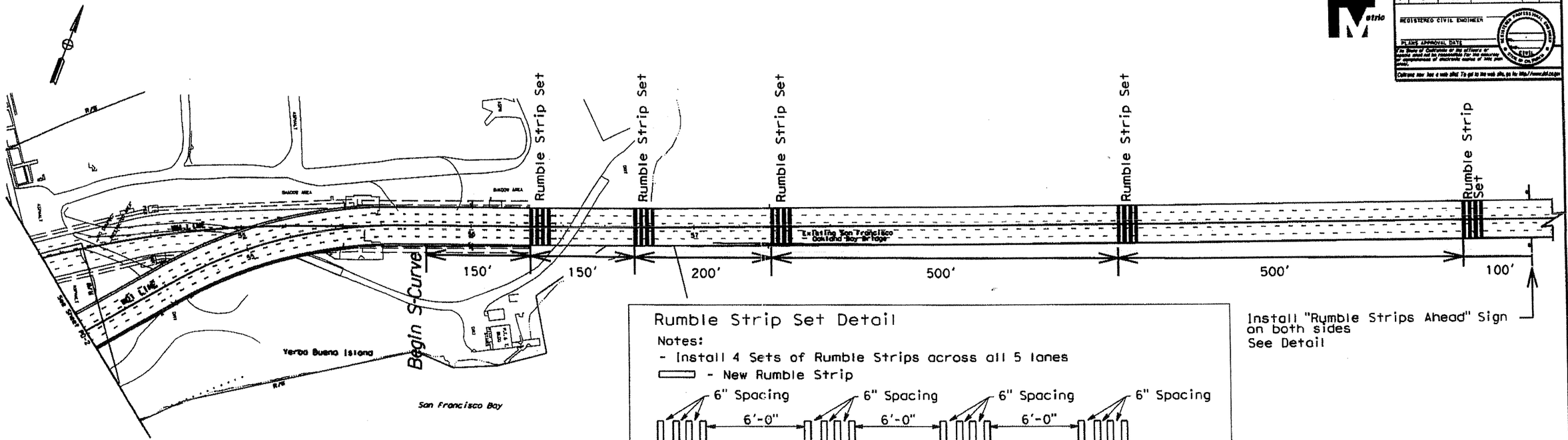

WESTBOUND

Rumble Strip Set Detail

Notes:
- Install 4 Sets of Rumble Strips across all 5 lanes
- ▭ - New Rumble Strip

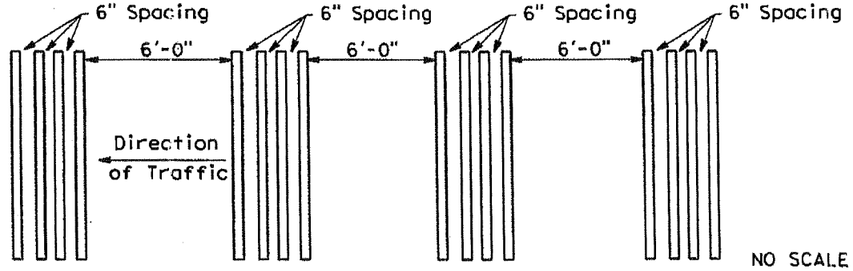

NO SCALE

WB RUMBLE STRIPS INSTALLATION
NO SCALE

THIS PLAN ACCURATE FOR RUMBLE STRIP WORK ONLY.

ALL DIMENSIONS ARE IN METERS UNLESS OTHERWISE SHOWN

PD-38

CU 04251 EA 012081

WB40120rn03.dgn 3/31/2010 2:59:01 PM

REGISTERED PROFESSIONAL ENGINEER
RAMIEL F. GUTIERREZ JR.
#C 047339
EXP 12/31/2011
STATE OF CALIFORNIA

CONTRACT NO. 04-0120R4
CONTRACT CHANGE ORDER NO. 246
SHEET 3 OF 5

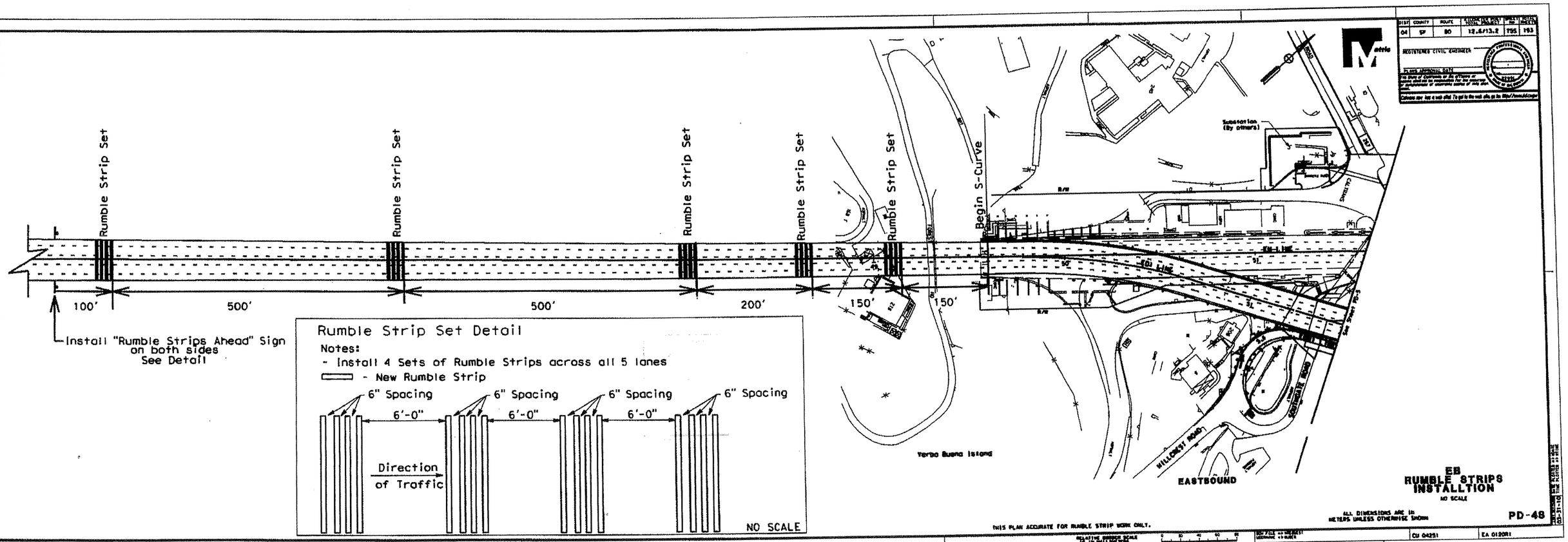

DIST	COUNTY	ROUTE	KILOMETER POST TOTAL PROJ.	TOTAL PROJ.	SHEET NO.
04	SF	80	12.6/13.2	795	193

REGISTERED CIVIL ENGINEER

PLANS APPROVAL DATE

The State of California or its officers or agents shall not be responsible for the accuracy or completeness of electronically stored information.

Caltrans now has a web site! To get to the web site, go to: http://www.dot.ca.gov

CU 04251 EA 0120R1

EB40120rn04.dgn 3/31/2010 3:15:41 PM

REGISTERED PROFESSIONAL ENGINEER
RAMIEL F. GUTIERREZ JR.
#C 047339
EXP 12/31/201
CIVIL
STATE OF CALIFORNIA
3/31/2010

CONTRACT NO. 04-0120R4

CONTRACT CHANGE ORDER NO. 246

SHEET 4 OF 5

DIST	COUNTY	ROUTE	KILOMETER POST TOTAL PROJECT	SHEET No	TOTAL SHEETS
04	SF	80	12.6/13.2	735	193

REGISTERED CIVIL ENGINEER

PLANS APPROVAL DATE

The State of California or the officers or agents shall not be responsible for the accuracy or completeness of electronic copies of this plan sheet.

Caltrans now has a web site! To get to the web site, go to: http://www.dot.ca.gov

Caltrans Metric

CALCULATED/ DESIGNED BY	Roland Au-Yeung	4/10	REVISED BY
CHECKED BY	Roland Au-Yeung	4/10	DATE REVISED

STATE OF CALIFORNIA - DEPARTMENT OF TRANSPORTATION — DESIGN OVERSIGHT

Caltrans

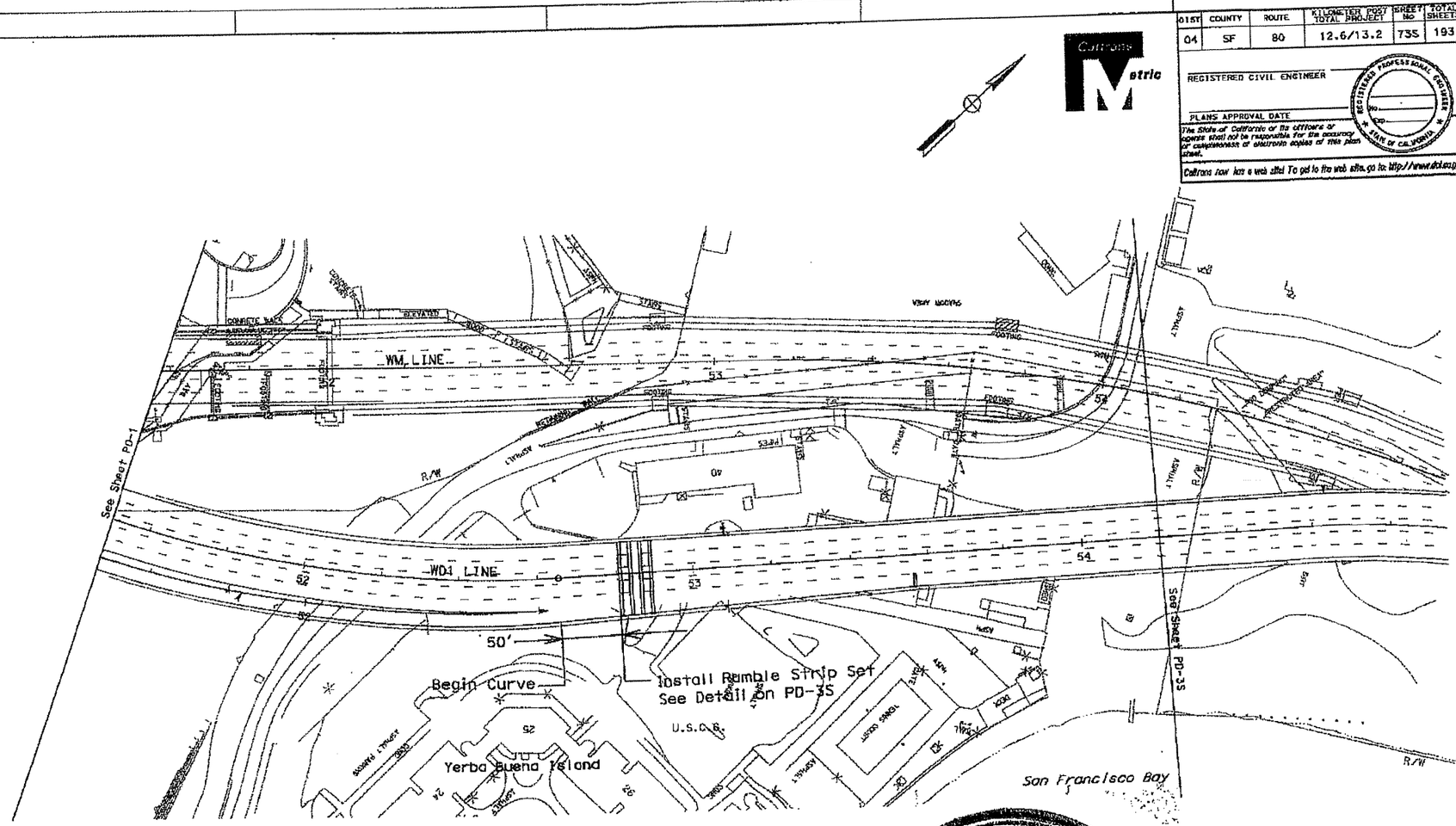

WESTBOUND

THIS PLAN ACCURATE FOR RUMBLE STRIP WORKS ONLY.

RELATIVE BORDER SCALE IS IN MILLIMETERS

ALL DIMENSIONS ARE IN FEET UNLESS OTHERWISE SHOWN

REGISTERED PROFESSIONAL ENGINEER
RAMIEL F. GUTIERREZ JR.
#C 047339
EXP 12/31/2011
CIVIL
STATE OF CALIFORNIA

4/13/10

WB RUMBLE STRIPS INSTALLATION

SCALE 1:500

PD-2S

CU 04251	EA 0120R1

LAST REVISION DATE PLOTTED =? 15-APR-2010
00-00-00 TIME PLOTTED =? 13:42

CONTRACT NO. 04-0120R4
CONTRACT CHANGE ORDER NO. 246
SHEET 5 OF 5

DIST	COUNTY	ROUTE	KILOMETER POST TOTAL PROJECT	SHEET No	TOTAL SHEETS
04	SF	80	12.6/13.2	76S	193

REGISTERED CIVIL ENGINEER

PLANS APPROVAL DATE

The State of California or its officers or agents shall not be responsible for the accuracy or completeness of electronic copies of this plan sheet.

Caltrans now has a web site! To get to the web site go to: http://www.dot.ca.gov

DATE	REVISED BY
4/10	Roland Au-Yeung
4/10	Roland Au-Yeung

CALCULATED/DESIGNED BY
CHECKED BY

DESIGN OVERSIGHT

STATE OF CALIFORNIA - DEPARTMENT OF TRANSPORTATION
Caltrans

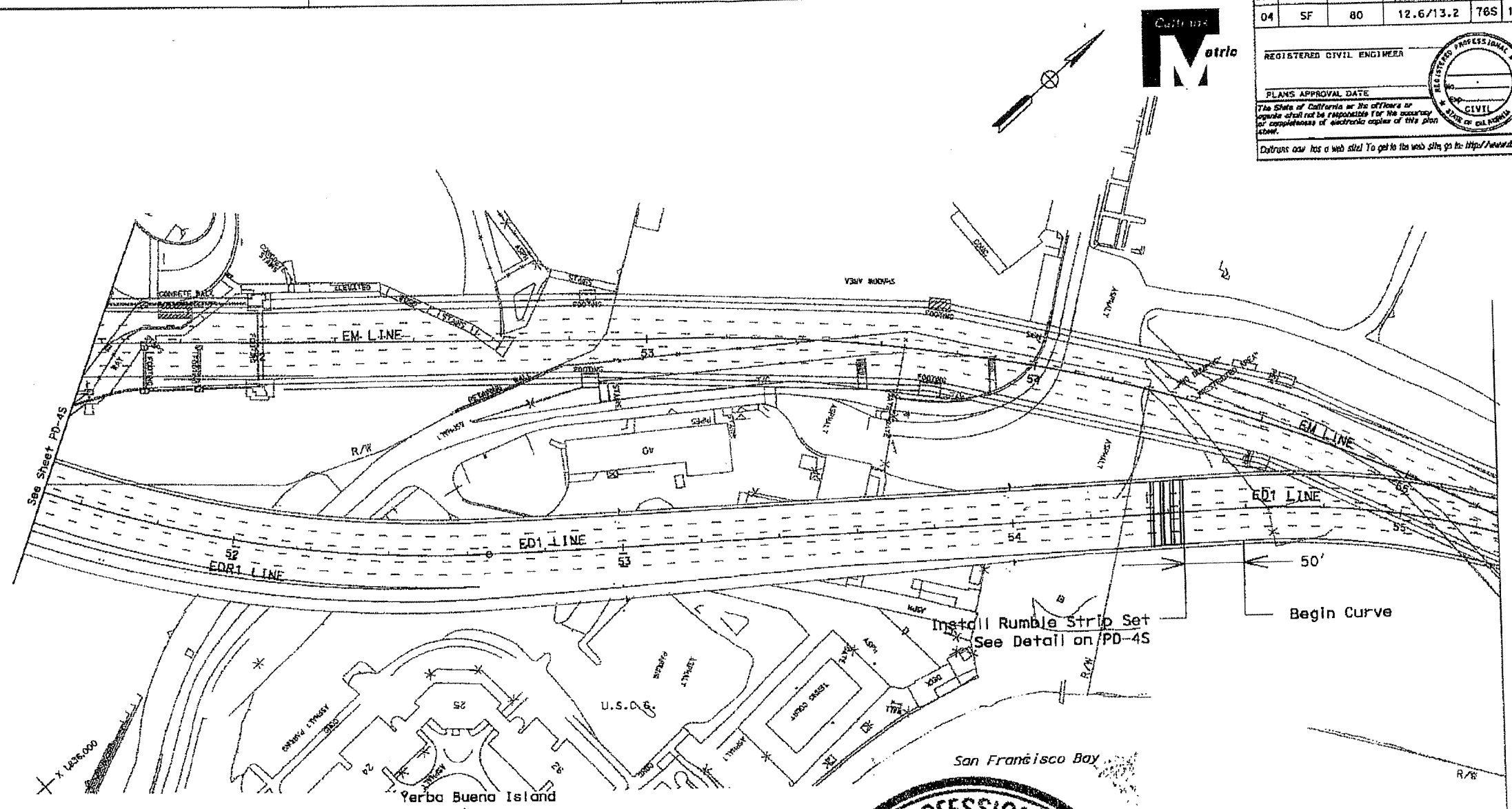

EASTBOUND

EB
RUMBLE STRIPS
INSTALLATION
SCALE 1:500

PD-5S

THIS PLAN ACCURATE FOR RUMBLE STRIP WORKS ONLY.

ALL DIMENSIONS ARE IN METERS UNLESS OTHERWISE SHOWN

RELATIVE BORDER SCALE IS IN MILLIMETERS

CU 04251	EA 0120R1

LAST REVISION DATE PLOTTED => 12-APR-2010
00-00-00 TIME PLOTTED => 13:31

REGISTERED PROFESSIONAL ENGINEER
RAMIEL F. GUTIERREZ JR.
#C 047339
EXP 12/31/2011
STATE OF CALIFORNIA

4/13/10

CONTRACT CHANGE ORDER

Change Requested by: Engineer

CCO: 247	Suppl. No. 0	Contract No. 04 - 0120R4	Road SF-80-12.6/13.2	FED. AID LOC.:

To: CC MYERS INC

You are directed to make the following changes from the plans and specifications or do the following described work not included in the plans and specifications for this contract. ***NOTE: This change order is not effective until approved by the Engineer.***

Description of work to be done, estimate of quantities and prices to be paid. (Segregate between additional work at contract price, agreed price and force account.) Unless otherwise stated, rates for rental of equipment cover only such time as equipment is actually used and no allowance will be made for idle time. This last percentage shown is the net accumulated increase or decrease from the original quantity in the Engineer's Estimate.

Extra Work at Lump Sum:

Furnish and install the 14 each wireless magnetometer vehicle detection stations, including all vehicle sensor nodes, junction boxes, enclosures, access point and repeater sensor detectors and all appurtenances, on the upper and lower decks of the San Francisco Oakland Bay Bridge as shown on Sheet No. 2 through No. 24 (Plan Sheets CCO-E1 through CCO-E23) of this change order.

For this work, the Contractor shall be compensated an agreed lump sum of $338,570.00. Excluding the cost of providing lane closures, this lump sum constitutes full and final compensation, including all markups, for all costs associated with this work.

Any lane closures required for the work of this change shall be provided under Change Order No. 240. These costs are excluded from this change order.

Estimated cost of Extra Work at Lump Sum $338,570.00

Estimated Cost: Increase ☑ Decrease ☐ **$338,570.00**

By reason of this order the time of completion will be adjusted as follows: 0 days

Submitted by		
Signature Jeannie Balderramos	**Resident Engineer** JEANNIE BALDERRAMOS	**Date** 4/30/10
Approved recommended by		
Signature Deanna Vilcheck	**Area Construction Manager** DEANNA VILCHECK	**Date** 4/30/10
Engineer Approval by		
Signature Deanna Vilcheck	**Area Construction Manager** DEANNA VILCHECK	**Date** 5/19/10

We the undersigned contractor, have given careful consideration to the change proposed and agree, if this proposal is approved, that we will provide all equipment, furnish the materials, except as may otherwise be noted above, and perform all services necessary for the work above specified, and will accept as full payment therefor the prices shown above.

NOTE: If you, the contractor, do not sign acceptance of this order, your attention is directed to the requirements of the specifications as to proceeding with the ordered work and filing a written protest within the time therein specified.

Contractor Acceptance by		
Signature Clifford	**(Print name and title)** L J Clifford CFO	**Date** 5-18-10

REGISTERED PROFESSIONAL ENGINEER
BEHZAD GOLEMOHAMMADI
No. 15283
Exp. 3/31/11
ELECTRICAL
STATE OF CALIFORNIA

DIST	COUNTY	ROUTE	POST MILES / TOTAL PROJECT	SHEET NO	TOTAL SHEETS
04	SF, Ala	80, 580 880	Ver	14	72

INSPECTOR NO

5-31-88
PLANS APPROVAL DATE

CALCULATED DESIGNED BY: W.F.T.
CHECKED BY: L.T.
DATE
REVISED BY
DATE REVISED

PROJECT ENGINEER
LYLE JAN

STATE OF CALIFORNIA - DEPARTMENT OF TRANSPORTATION
Caltrans

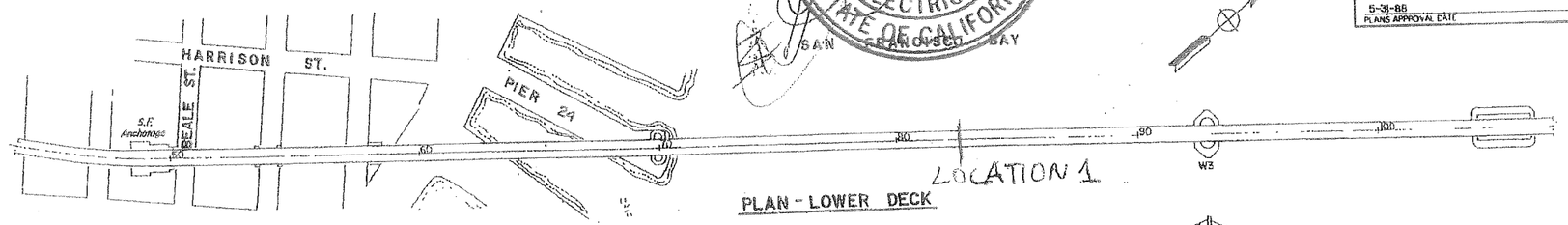

PLAN - LOWER DECK

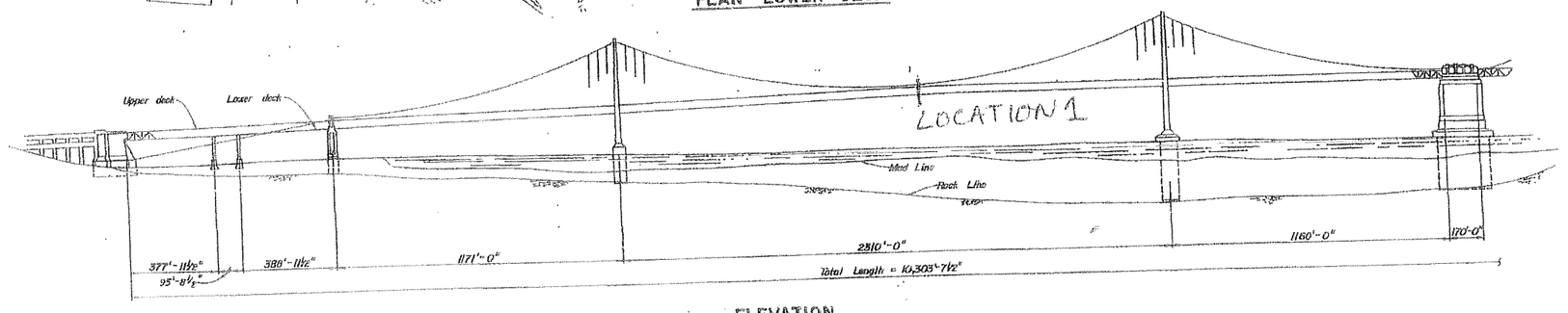

ELEVATION
NO SCALE

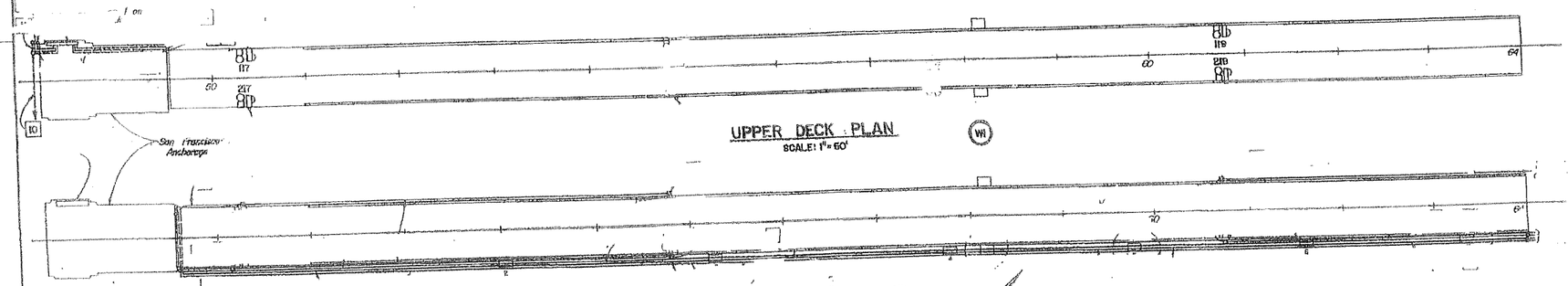

UPPER DECK PLAN
SCALE: 1"= 60'

LOWER DECK PLAN
SCALE: 1"= 60'

NO CONSTRUCTION CHANGES
CONTRACT No. 04-003114
DATE ACCEPTED 11-21-90
AS BUILT
RESIDENT ENGINEER S Sarrafzadeh

CCO-E1

FOR REDUCED PLANS
ORIGINAL SCALE IS IN INCHES
0 1 2 3

CONTRACT NO. 04-0120R4
CONTRACT CHANGE ORDER NO. 247
SHEET 2 OF 24

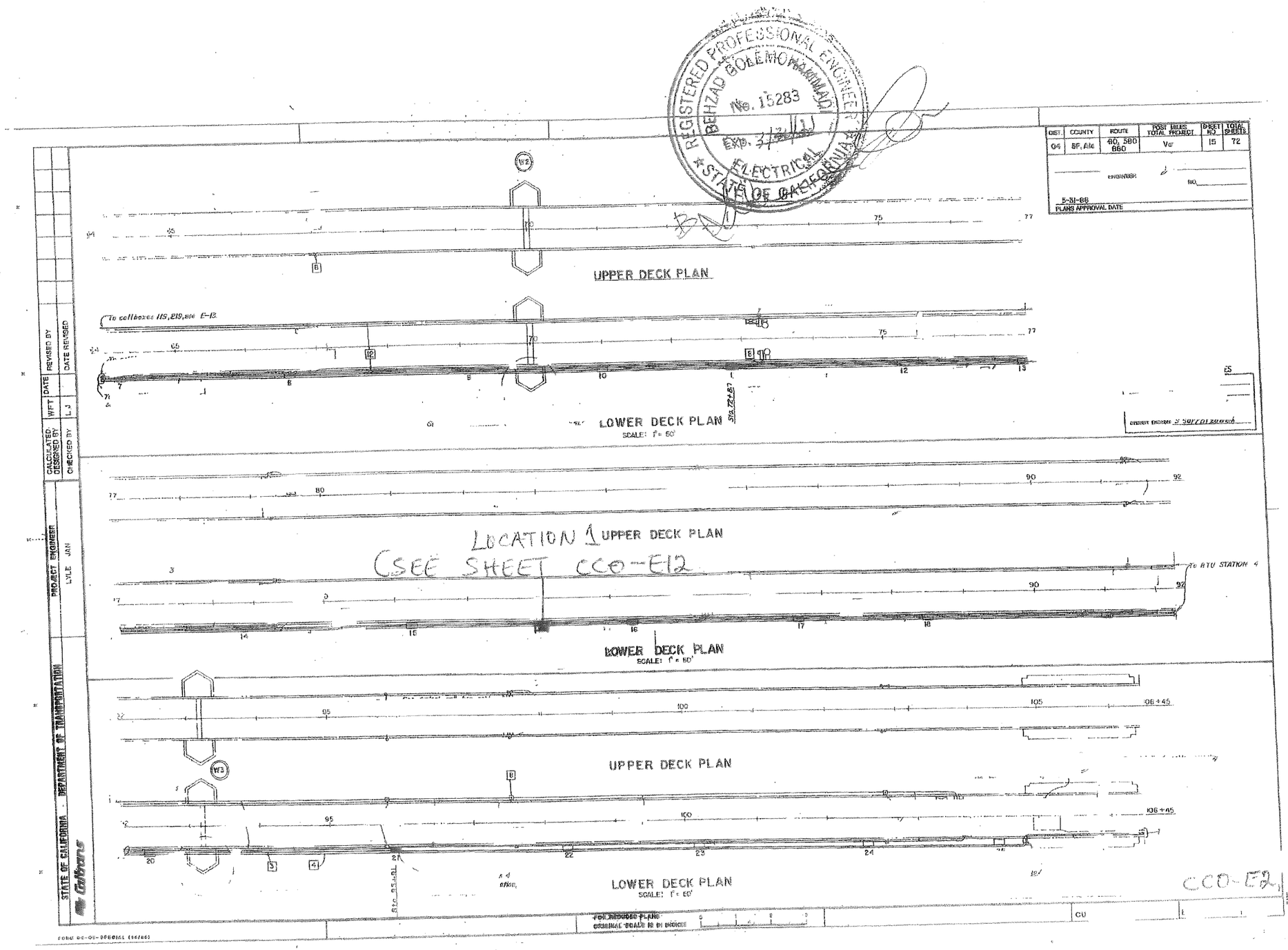

SF, Ala 80 Lyle (Lenh Tran)

CONTRACT NO. 04-0120R4

CONTRACT CHANGE ORDER NO. 247

SHEET 3 OF 24

REGISTERED PROFESSIONAL ENGINEER
FEHZAD GOLEMOHAMMADI
No. 15283
Exp 12 3/31/11
ELECTRICAL
STATE OF CALIFORNIA

04 SF, Ala 80, 360 880

5-31-88
PLANS APPROVAL DATE

SAN FRANCISCO BAY

LOCATION 14
LOCATION 2
LOCATION 3
LOCATION 4
Y.B. Anchorage

PLAN
SCALE: 1" = 100'

LOCATION 14
LOCATION 2
LOCATION 3
LOCATION 4
Close To 9
Splice 507 cable
140ft
Y.B. Anchorage
M.L. L.W. = Elev. 0.00'
Mud Line
Rock Line
170'-0"
1160'-0"
1160'-0"
Total Length = 10,303-7½"

ELEVATION
NO SCALE

106+45
110
120
121+50

LOCATION 14
(SEE SHEET CCO-E18)

UPPER DECK PLAN
SCALE: 1" = 60'

106+45
110
116
26
27
28
29
30

LOCATION 2
(SEE SHEET CCO-E12)

LOWER DECK PLAN
SCALE: 1" = 60'

CCO-E3

SCALE: AS SHOWN

FOR REDUCED PLANS
ORIGINAL SCALE IS IN INCHES

CU | EA

CONTRACT NO. 04-012 OR 4
CONTRACT CHANGE ORDER NO. 247
SHEET 4 OF 24

PROJECT ENGINEER: LYCE JAN
STATE OF CALIFORNIA - DEPARTMENT OF TRANSPORTATION
Caltrans

	DATE	REVISED BY	DATE REVISED
CALCULATED/DESIGNED BY	WFT		
CHECKED BY	LJ		

REGISTERED PROFESSIONAL ENGINEER
BEHZAD GOLEMOHAMMADI
No. 15283
3/31/11
ELECTRICAL
STATE OF CALIFORNIA

DIST	COUNTY	ROUTE	POST MILES PREC	POST MILES	TOTAL PROJECT
04	SF, Alm	80, 580 880		7.7	7.2

ENGINEER

5-31-88
PLANS APPROVAL DATE

UPPER DECK PLAN

LOWER DECK PLAN
SCALE: 1"=60'

See E-15 for 1214-50 continuation.

LOCATION 3
(SEE SHEET CCO-E12)

UPPER DECK PLAN

LOWER DECK PLAN
SCALE: 1"=60'

Y.B. ANCHORAGE

Re continuation See sheet E-17.

Call box installation in this part, see next sheet.

LOCATION 4
(SEE SHEET CCO-E12)

CCO-E4

DATE	REVISED BY	DATE REVISED

CALCULATED/DESIGNED BY
DRAWN
CHECKED BY

PROJECT ENGINEER
LYLE JAN

STATE OF CALIFORNIA - DEPARTMENT OF TRANSPORTATION
Caltrans

FOR REDUCED PLANS
ORIGINAL SCALE IS IN INCHES 0 1 2 3

FORM DC-05 • SPECIAL (10/82)

CONTRACT NO. 04-012024
CONTRACT CHANGE ORDER NO. 247
SHEET 5 OF 24

DIST.	COUNTY	ROUTE	PROJ. TOTAL SHEETS	SHEET NO.	TOTAL SHEETS
04	SF,Ala	80, 560 880		18	72

ENGINEER

5-31-88
PLANS APPROVAL DATE

REGISTERED PROFESSIONAL ENGINEER
BEHZAD GOLEMOHAMMADI
No. 15283
Exp. 3/31/11
ELECTRICAL
STATE OF CALIFORNIA

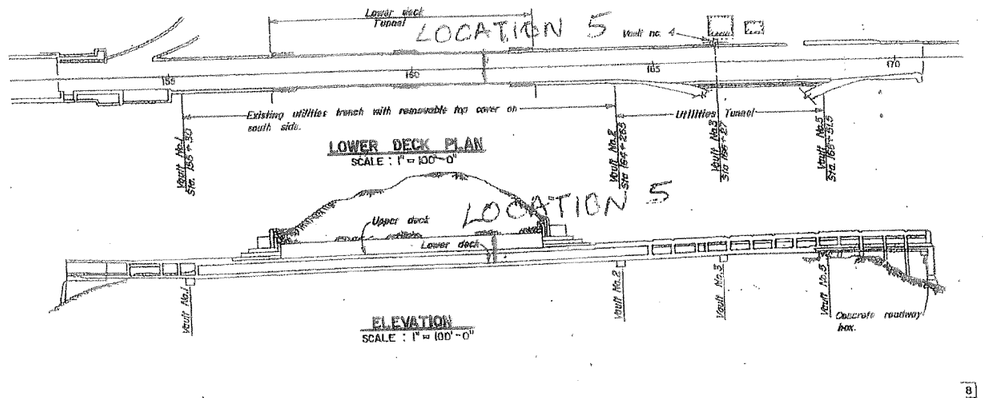

LOWER DECK PLAN
SCALE : 1" = 100'-0"

ELEVATION
SCALE : 1" = 100'-0"

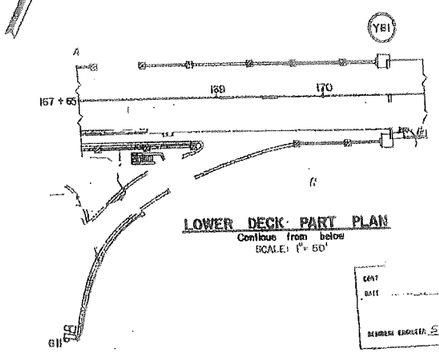

LOWER DECK PART PLAN
Continue from below
SCALE: 1" = 50'

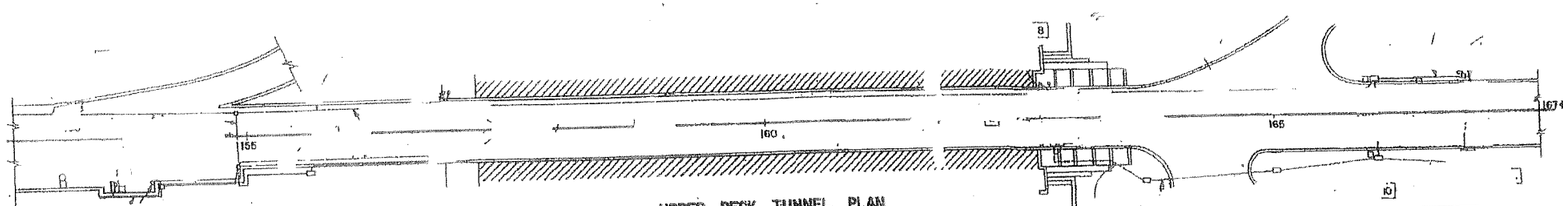

UPPER DECK TUNNEL PLAN
SCALE: 1"=50'

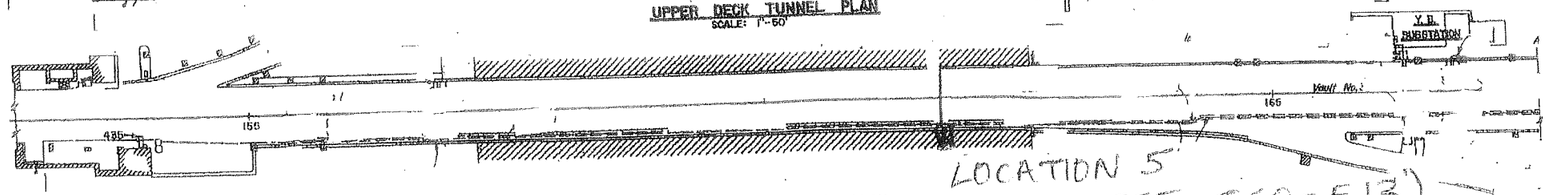

LOWER DECK TUNNEL PLAN
SCALE: 1"=50'

LOCATION 5
(SEE SHEET CCO-E13)

SYMBOLS:

1. Install 3"C, 9-6#16 conductor cables and 3"C, 8-6#16 conductor cables, 3#6(call box 120V), 3#14(120V.PEU).
2. Install 3"C, 3#8, 6-6#16 conductor cables for call boxes 135, 235, 335, 435, 236, 436.
3. Install 3"C, 3#8, 11-6#16 conductor cables.
4. Install 3#12, 1-6#16 conductor cable in existing conduit.

CCO-E5

CONTRACT NO. 04-0120R4
CONTRACT CHANGE ORDER NO. 247
SHEET 6 OF 24

STATE OF CALIFORNIA - DEPARTMENT OF TRANSPORTATION
Caltrans

PROJECT ENGINEER: LYLE JAN
CALCULATED/DESIGNED BY: WFT
CHECKED BY: LJ
DATE
REVISED BY
DATE REVISED

FOR REDUCED PLANS ORIGINAL SCALE IS IN INCHES

NOTES:

1. For complete R/W and Accurate Access Data, see R/W Record Maps at District Office.
2. For ESA limits, see sheet C-1.

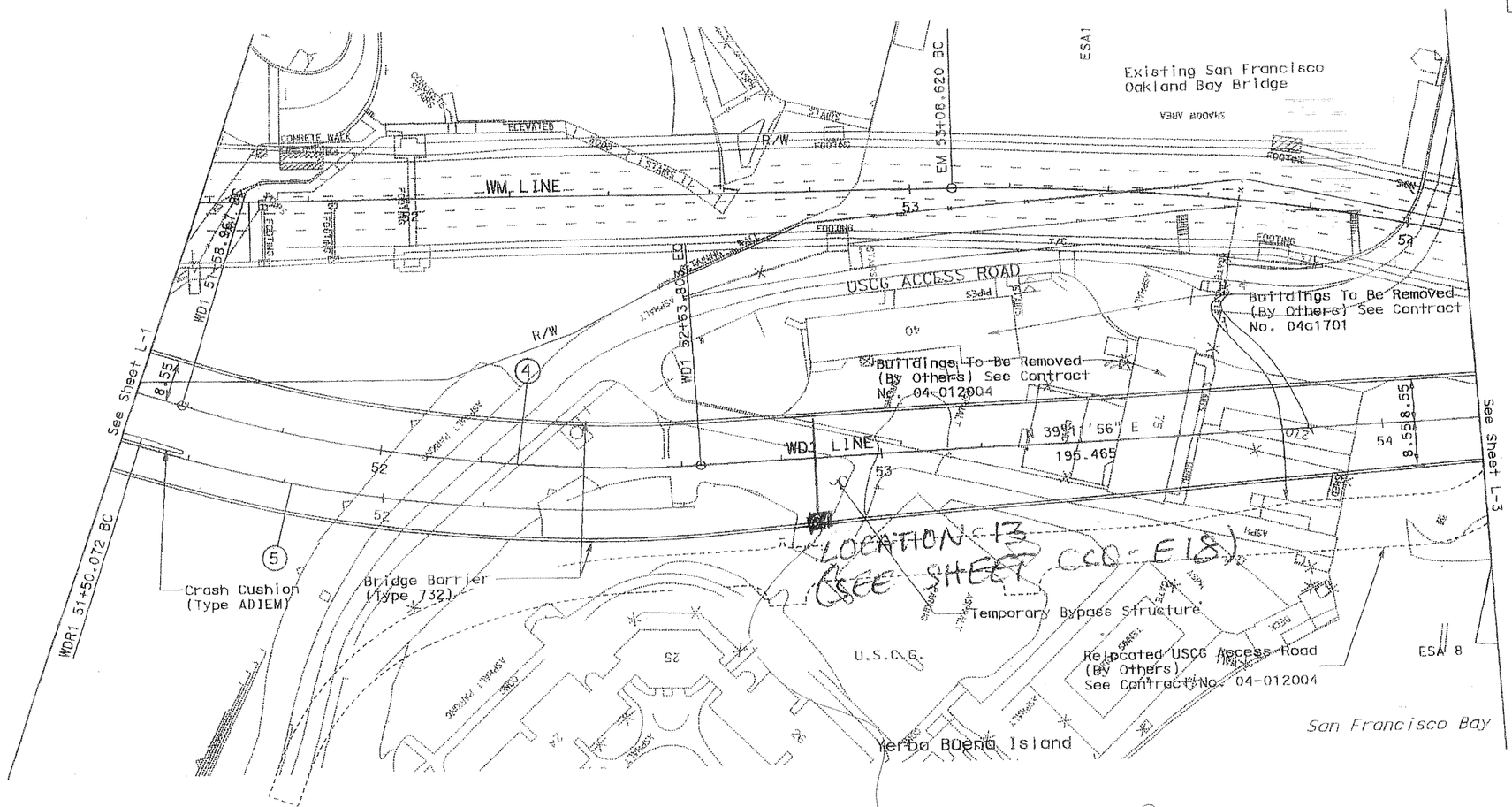

CURVE DATA						
NO.	R	△	T	L	N	E
④	300	20°01'20"	52.958	104.836	647 413.080	1 835 797.481
⑤	308.25	20°52'06"	56.764	112.271	647 408.371	1 835 793.680

For Notes, Abbreviations and/or Legend See Sheet L-1

ALL DIMENSIONS ARE IN METERS UNLESS OTHERWISE SHOWN

DIST	COUNTY	ROUTE	KILOMETER POST TOTAL PROJECT	SHEET No.	TOTAL SHEETS
04	SF	80	12.6/13.2	6	193

REGISTERED CIVIL ENGINEER

PLANS APPROVAL DATE

The State of California or its officers or agents shall not be responsible for the accuracy or completeness of electronic copies of this plan sheet.

Caltrans now has a web site! To get to the web site, go to: http://www.dot.ca.gov

PARSONS BRINCKERHOFF QUADE & DOUGLAS, INC.
303 Second St., Suite 700N
San Francisco, CA 94107-1366

REGISTERED PROFESSIONAL ENGINEER
BEHZAD GOLEMOHAMMADI
No. 15283
Exp. 3/31/11
ELECTRICAL
STATE OF CALIFORNIA

CONTRACT NO. 04-012004
CONTRACT CHANGE ORDER NO. 247
SHEET 2 OF 24

CCO-E6

CALCULATED/ DESIGNED BY	K. Gemmill	DATE 2/03	REVISED BY	KG
CHECKED BY	T. Dougherty	2/03	DATE REVISED	3/03

DESIGN OVERSIGHT: Bob Zandipour

STATE OF CALIFORNIA - DEPARTMENT OF TRANSPORTATION
Caltrans

DATE PLOTTED = 10-MAR-2010
TIME PLOTTED = 13:21
LAST REVISION 00-00-00

DIST	COUNTY	ROUTE	KILOMETER POST TOTAL PROJECT	SHEET No	TOTAL SHEETS
04	SF	80	12.6/13.2	7	193

REGISTERED CIVIL ENGINEER

PLANS APPROVAL DATE

The State of California or its officers or agents shall not be responsible for the accuracy or completeness of electronic copies of this plan sheet.

Caltrans now has a web site! To get to the web site, go to: http://www.dot.ca.gov

PARSONS BRINCKERHOFF QUADE & DOUGLAS, INC.
303 Second St., Suite 700N
San Francisco, CA 94107-1317

REGISTERED PROFESSIONAL ENGINEER
BEHZAD GOLEMOHAMMADI
No. 15283
Exp. 3/31/11
ELECTRICAL
STATE OF CALIFORNIA

NOTES:

1. For complete R/W and Accurate Access Data, see R/W Record Maps at District Office.
2. For ESA limits, see sheet C-1.

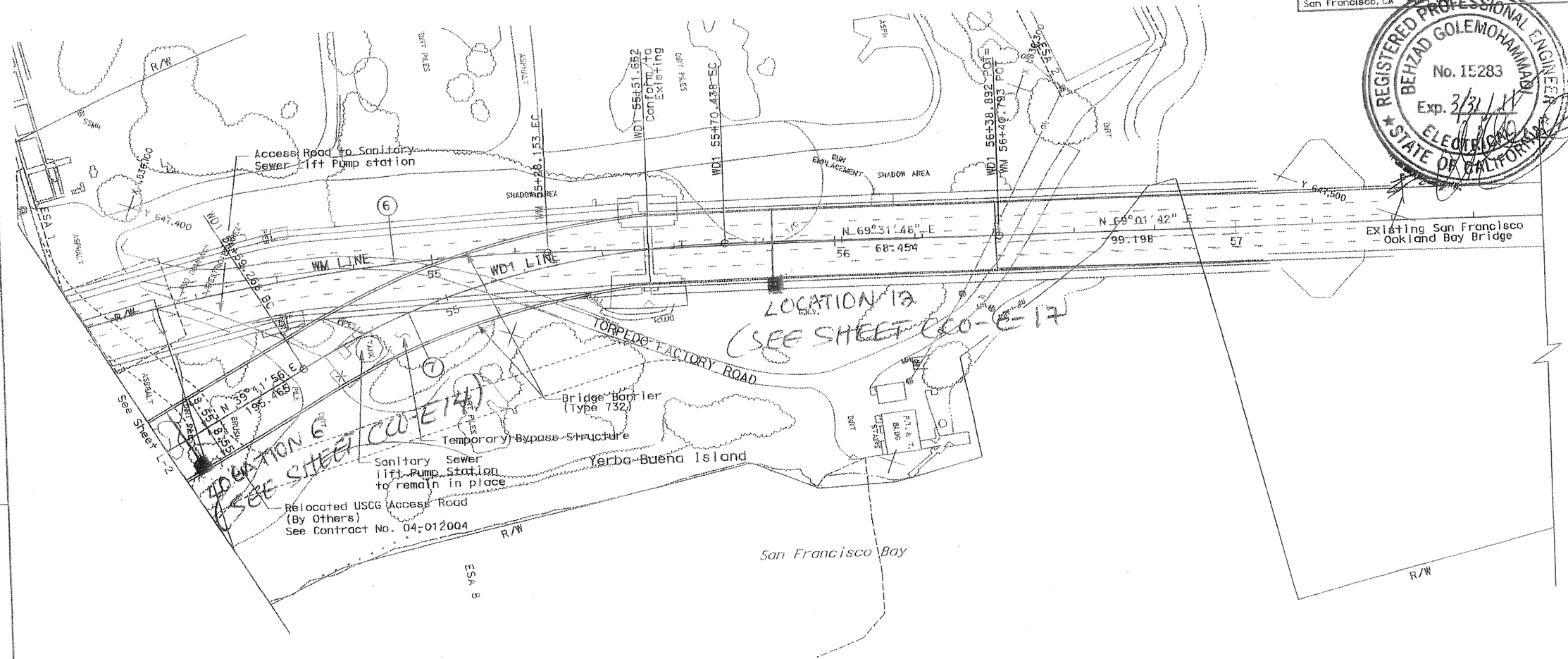

CURVE DATA

NO.	R	Δ	T	L	N	E
6	457.20	27°30'42"	111.926	219.534	646 995.681	1 836 365.394
7	210	30°19'52"	56.920	111.170	647 242.230	1 836 316.246

For Notes, Abbreviations and/or Legend See Sheet L-1

ALL DIMENSIONS ARE IN METERS UNLESS OTHERWISE SHOWN

CONTRACT NO. 04-0120R4
CONTRACT CHANGE ORDER NO. 247
SHEET 8 OF 24

CCO-E7

STATE OF CALIFORNIA - DEPARTMENT OF TRANSPORTATION
Caltrans

DESIGN OVERSIGHT	CALCULATED/DESIGNED BY	CHECKED BY	DATE REVISED BY	DATE REVISED
Bob Zandipour	K. Gemmill	T. Dougherty	KG	3/03
	2/03	2/03		

LAST REV'D 00-00-00 DATE PLOTTED => 09-MAR-2010 TIME PLOTTED => 13:02

1 ← 62' → 1

| ← 41' →|

LOCATION 11

LOCATION 11

LOCATION 10

CB 245

YERBA BUENA ISLAND

SAN FRANCISCO

PLAN - LOWER DECK
Scale 1" = 100'

LOCATION 11

LOCATION 10

Steel structure expansion joint, Typical.

Rock Line

271'-6" | 291'-3 15/16" | 291'-6 1/2" | 298'-5 5/16" | 505'-6" | 1400'-0" | 312'-0" | 510'-6" | 509'-0" | 809'-0" | 809'-0" | 506'-6"

1,527'-0"

Total Length = 11,329'-1/2"

ELEVATION
No Scale

UPPER DECK PLAN
Scale: 1" = 80'

LOWER DECK PLAN
Scale 1" = 80'

DIST.	COUNTY	ROUTE	POST TOTAL	SHEET	TOTAL SHEETS
04	SF, Ala	80, 560 880			72

ENGINEER

5-31-88
PLANS APPROVAL DATE

REGISTERED PROFESSIONAL ENGINEER
BEHZAD SALEMI-HAMMAD
No. 15283
Exp. 3/31/11
ELECTRICAL
STATE OF CALIFORNIA

NO CONSTRUCTION CHANGES
CONTRACT No. 04-003114
DATE ACCEPTED 11-21-90
AS BUILT
REMARKS RECORDED S Serrafzadeh

CALCULATED/DESIGNED BY | W F T | DATE | REVISED BY | DATE REVISED
CHECKED BY | L J | | |

PROJECT ENGINEER
LYLE JAN

STATE OF CALIFORNIA - DEPARTMENT OF TRANSPORTATION
Caltrans

FOR REDUCED PLANS ORIGINAL SCALE IS IN INCHES 0 1 2 3

CCO-E8

CONTRACT NO. 04-012084
CONTRACT CHANGE ORDER NO. 243
SHEET 9 OF 24

DIST	COUNTY	ROUTE	POST MILES TOTAL PROJECT	SHEET NO	TOTAL SHEETS
04	SF, Ala	80, 580, 880	Var	20	72

ENGINEER _____ RD. _____

5-31-88.
PLANS APPROVAL DATE

REGISTERED PROFESSIONAL ENGINEER
BEHZAD GOLEMOHAMMADI
No. 15283
Exp. 3/21/11
ELECTRICAL
STATE OF CALIFORNIA

LOCATION 11
(SEE SHEET CCO-E17)

UPPER DECK PLAN

LOWER DECK PLAN

LOCATION 10
(SEE SHEET CCO-E16)

UPPER DECK PLAN

LOWER DECK PLAN

See above for continuation.

See below for continuation.

CALLBOX E9 : 41C, 3+80

UPPER DECK PLAN

LOWER DECK PLAN

See above for continuation.

See next sheet for continuation.

Install RTU Station (c)
See typical details on E-43, 44

PLANS ASSEMBLED _____

DESIGNED BY S. Sarrafzadeh

CALCULATED/DESIGNED BY
CHECKED BY
QUANTITIES
DATE
REVISED BY
DATE REVISED

PROJECT ENGINEER
LICENSE NO.

STATE OF CALIFORNIA - DEPARTMENT OF TRANSPORTATION
Caltrans

CCO-E9

SCALE: 1" = 50'

FOR REDUCED PLANS
ORIGINAL SCALE IN INCHES 0 1 2 3

CU EA

FORM DC-OE- SPECIAL (10/88)

CONTRACT NO. 04-012084
CONTRACT CHANGE ORDER NO. 247
SHEET 10 OF 24

DIST	COUNTY	ROUTE	POST MILES TOTAL PROJECT	SHEET NO.	TOTAL SHEETS
04	SF, Ala	80, 580, 880	Ver	21	72

5-31-88
PLANS APPROVAL DATE

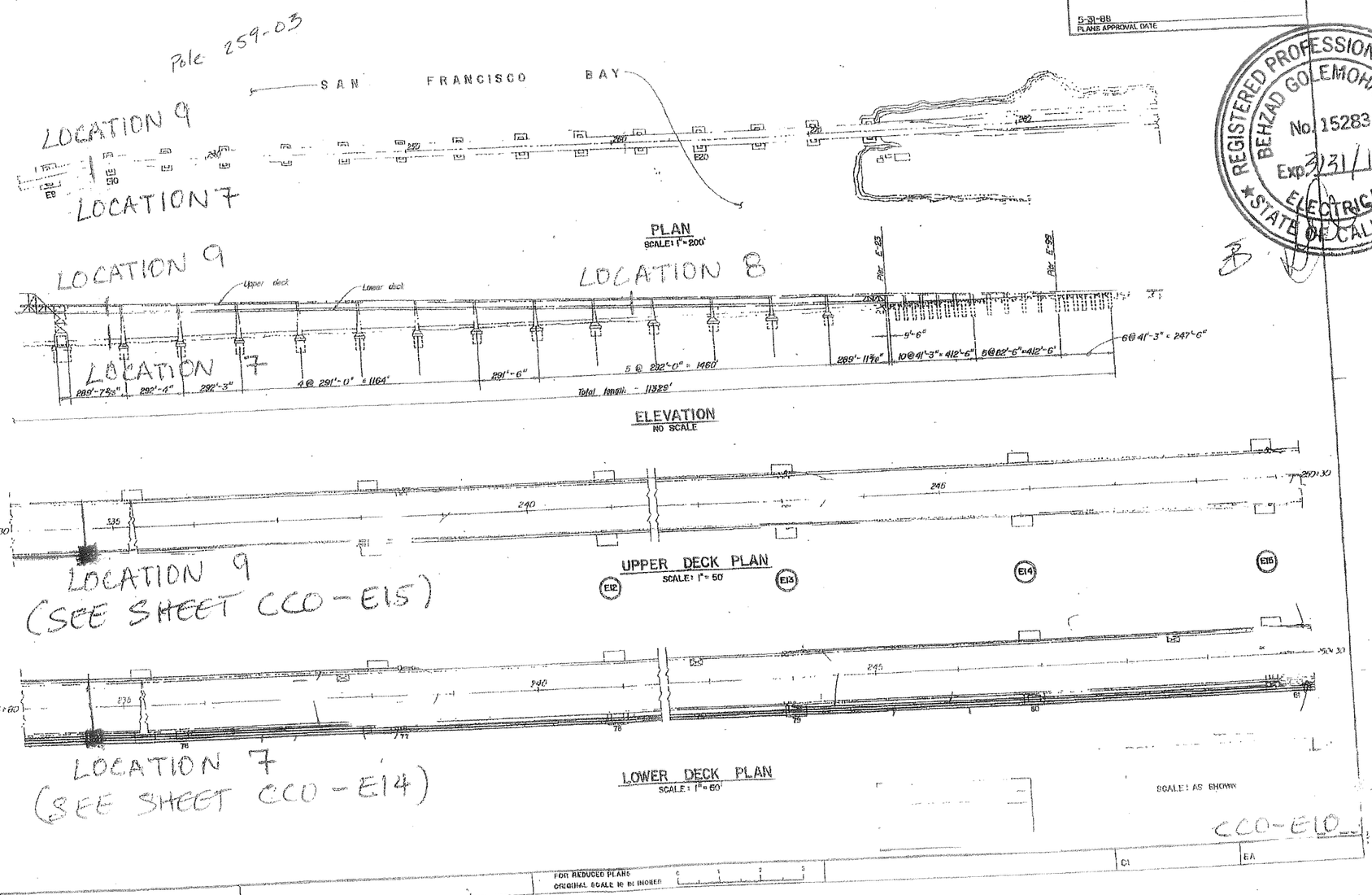

REGISTERED PROFESSIONAL ENGINEER
BEHZAD GOLEMOHAMMADI
No. 15283
Exp. 3/31/11
ELECTRICAL
STATE OF CALIFORNIA

STATE OF CALIFORNIA - DEPARTMENT OF TRANSPORTATION
Caltrans

PROJECT ENGINEER L. JAN

CALCULATED DESIGNED BY WFT | DATE | REVISED BY
CHECKED BY LJ | DATE REVISED

FOR REDUCED PLANS ORIGINAL SCALE IS IN INCHES

FORM DC-65-SPECIAL (10/86)

CONTRACT NO. 04-0120R4
CONTRACT CHANGE ORDER NO. 247
SHEET 11 OF 24

DIST	COUNTY	ROUTE	POST MILES TOTAL PROJECT	SHEET NO	TOTAL SHEETS
04	SF, Ala	80, 580, 880	Var	22	72

5-31-88
PLANS APPROVAL DATE

CB 253
Pole 269-19L

410, 3#8

See typical installation on E-39

UPPER DECK PLAN

LOCATION 8 callbox
(SEE SHEET CCO-E15)

See E-20 for continuation

LOWER DECK PLAN

See below for continuation

UPPER DECK PLAN

See above for continuation

MOLE SUBSTATION

LOWER DECK PLAN

CCO-E11

REGISTERED PROFESSIONAL ENGINEER
BEHZAD GOLEMOHAMMADI
No. 15283
Exp. 3/31/11
ELECTRICAL
STATE OF CALIFORNIA

CALCULATED DESIGNED BY: MFT | DATE: | REVISED BY | DATE REVISED
CHECKED BY: LJ

PROJECT ENGINEER: LYLE JAN

STATE OF CALIFORNIA — DEPARTMENT OF TRANSPORTATION
Caltrans

FOR REDUCED PLANS
ORIGINAL SCALE IS IN INCHES

FORM CC-01- SPECIAL (10/85)

CONTRACT NO. 04-012084
CONTRACT CHANGE ORDER NO. 247
SHEET 12 OF 24

Dist	COUNTY	ROUTE	POST MILES TOTAL PROJECT	SHEET No.	TOTAL SHEETS

REGISTERED ELECTRICAL ENGINEER DATE

PLANS APPROVAL DATE

THE STATE OF CALIFORNIA OR ITS OFFICERS OR AGENTS SHALL NOT BE RESPONSIBLE FOR THE ACCURACY OR COMPLETENESS OF ELECTRONIC COPIES OF THIS PLAN SHEET.

REGISTERED PROFESSIONAL ENGINEER BEHZAD GOLEMOHAMMAD No. 15283 Exp. 3/31/11 ELECTRICAL STATE OF CALIFORNIA

REGISTERED PROFESSIONAL ENGINEER No. Exp. ELECT STATE OF CALIFORNIA

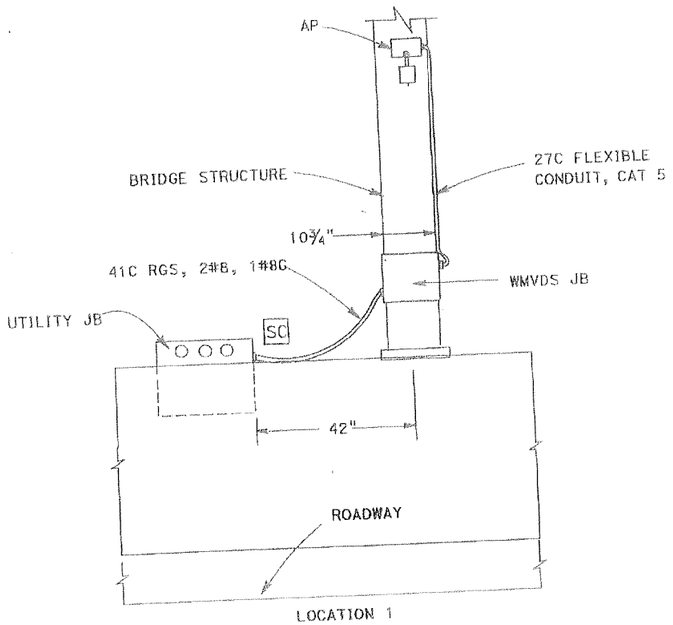

LOCATION 1

(LOWER DECK
1.5 mile from the beginning of the S curve)

41C, CAT5

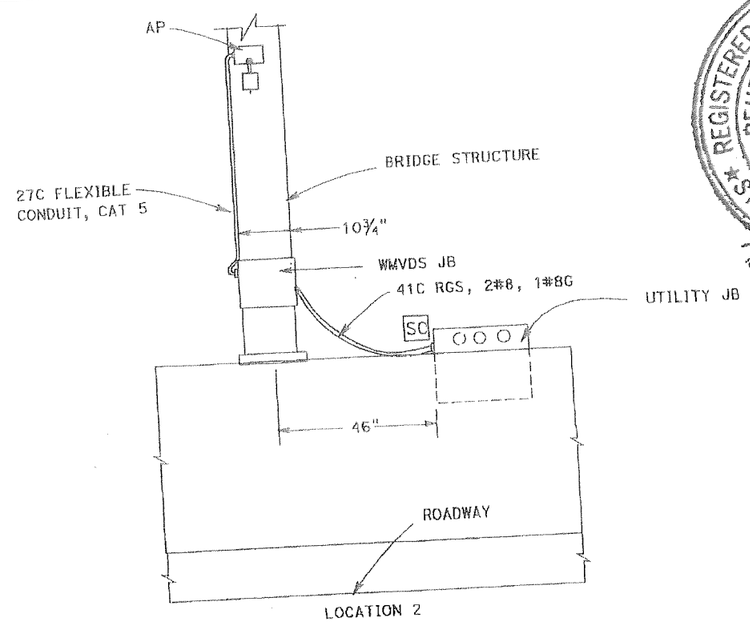

LOCATION 2

(LOWER DECK
1.0 mile from the beginning of the S curve)

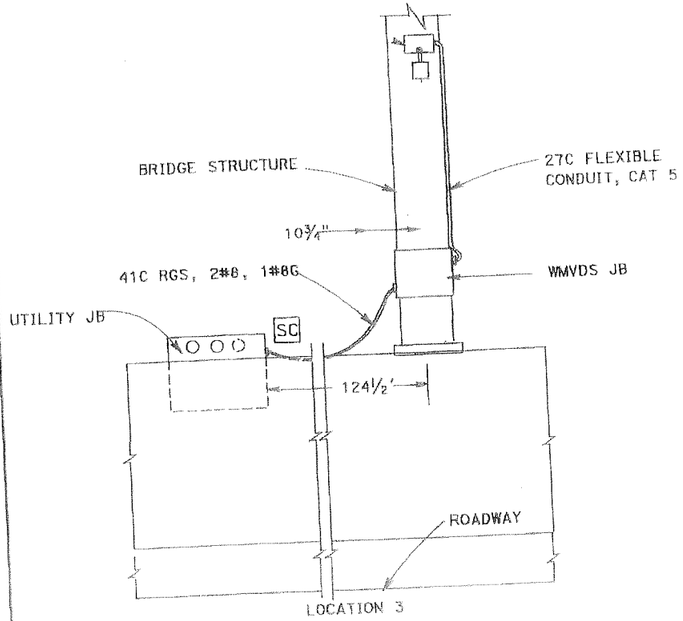

LOCATION 3

(LOWER DECK
0.5 mile from the beginning of the S curve)

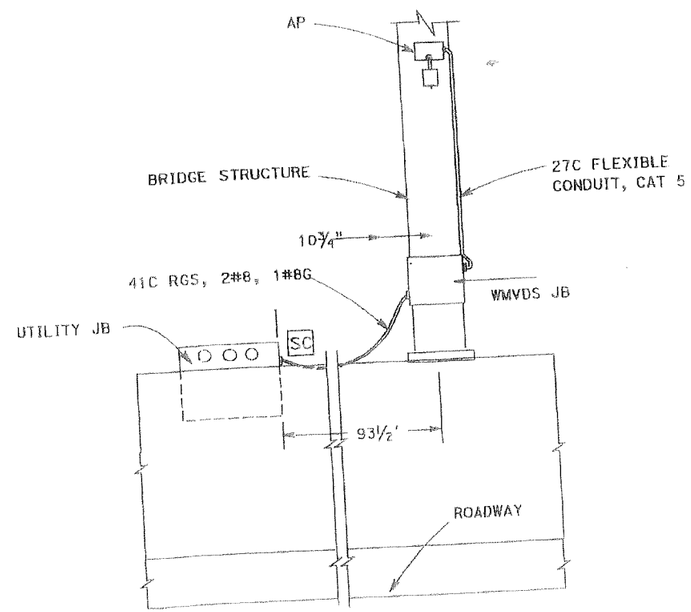

LOCATION 4

(LOWER DECK
1000 ft from the beginning of the S curve)

ABBREVIATIONS

JB	JUNCTION BOX
AP	ACCESSPOINT
WMVDS	WIRELESS MAGNETOMETER VEHICLE DETECTION STATION

GENERAL NOTE

(This sheet only)

1. THE EXACT LOCATIONS OF SENSORS WILL BE DETERMINED BY CALTRANS FIELD ENGINEER.
2. SECURE CONDUIT TO THE K-RAIL (BARRIER RAIL), BRIDGE STRUCTURE WITH GALVANIZED CLAPS OR AS DIRECTED BY THE ENGINEER.
3. SEE SHEET CCO-E22 AND CCO-E23 FOR MOUNTING DETAILS
4. SEE SHEET CCO-E20 FOR WIRELESS MAGNETOMETER VEHICLE DETECTION STATION DETAILS
5. SEE SHEET CCO-E19 FOR WIRING DETAIL AND EQUIPMENT LAYOUT

CONTRACT NO. 04-012024

CONTRACT CHANGE ORDER NO. 247

SHEET 13 OF 24

WIRELESS MAGNETOMETER VEHICLE DETECTION STATION

(LACATIONS 1,2,3 AND 4)

NO SCALE

CCO-E12

THIS PLAN ACCURATE FOR ELECTRICAL WORK ONLY.

RELATIVE BORDER SCALE IS IN INCHES 0 1 2 3

USERNAME => [redacted]
DGN FILE => 012.dgn

CU | EA

STATE OF CALIFORNIA - DEPARTMENT OF TRANSPORTATION

Caltrans ELECTRICAL

FUNCTIONAL SUPERVISOR

CALCULATED-DESIGNED BY | CHECKED BY

REVISED BY | DATE REVISED

BORDER LAST REVISED 3/1/2007

Dist	COUNTY	ROUTE	POST MILES TOTAL PROJECT	SHEET No.	TOTAL SHEETS

REGISTERED ELECTRICAL ENGINEER DATE

PLANS APPROVAL DATE

THE STATE OF CALIFORNIA OR ITS OFFICERS OR AGENTS SHALL NOT BE RESPONSIBLE FOR THE ACCURACY OR COMPLETENESS OF ELECTRONIC COPIES OF THIS PLAN SHEET.

REGISTERED PROFESSIONAL ENGINEER No. Exp. ELECT STATE OF CALIFORNIA

REGISTERED PROFESSIONAL ENGINEER BEHZAD GOLEMOHAMMADI No. 15283 Exp. 3/31/11 ELECTRICAL STATE OF CALIFORNIA

B.

GENERAL NOTE
(This sheet only)

1. THE EXACT LOCATIONS OF SENSORS WILL BE DETERMINED BY CALTRANS FIELD ENGINEER.
2. SECURE CONDUIT TO THE K-RAIL (BARRIER RAIL), BRIDGE STRUCTURE WITH GALVANIZED CLAPS OR AS DIRECTED BY THE ENGINEER.
3. SEE SHEET CCO-E22 AND CCO-E23 FOR MOUNTING DETAILS
4. SEE SHEET CCO-E20 FOR WIRELESS MAGNETOMETER VEHICLE DETECTION STATION DETAILS
5. SEE SHEET CCO-E19 FOR WIRING DETAIL AND EQUIPMENT LAYOUT

ABBREVIATIONS

JB	JUNCTION BOX
AP	ACCESSPOINT
WMVDS	WIRELESS MAGNETOMETER VEHICLE DETECTION STATION

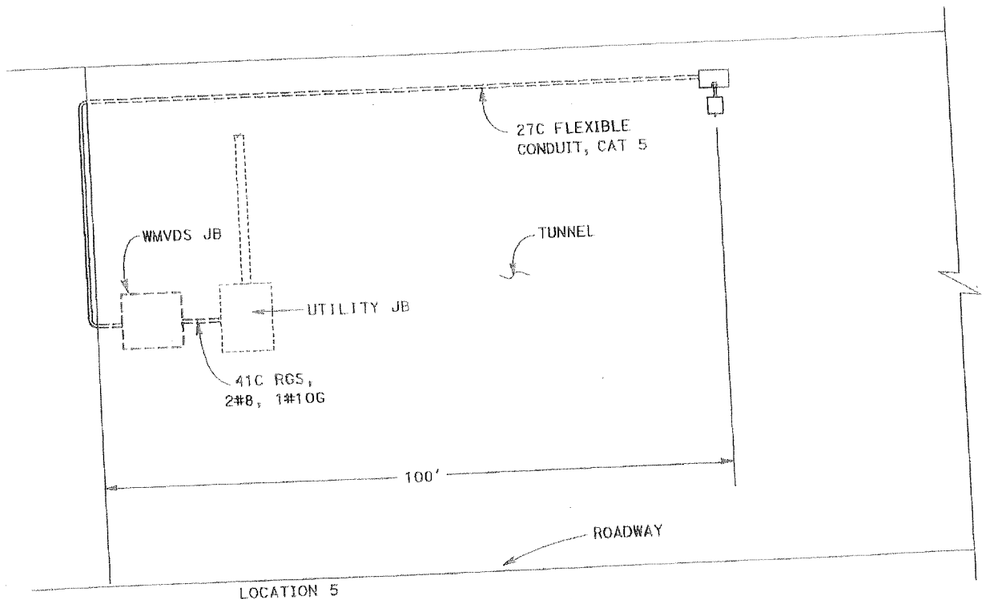

LOCATION 5
(VIEW AT THE FRONT OF TUNNEL WALL)
(LOWER DECK
100ft form the beginning of the S curve)

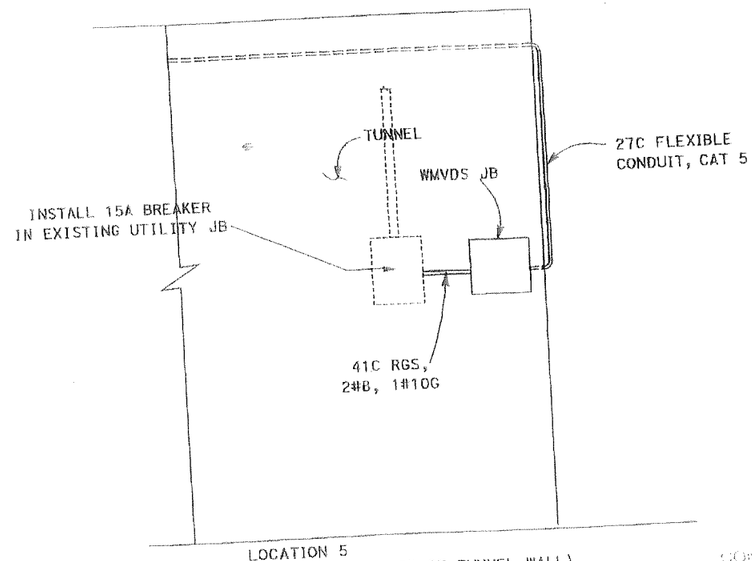

LOCATION 5
(VIEW AT THE BACK OF TUNNEL WALL)
(LOWER DECK
100ft form the beginning of the S curve)

CONTRACT NO. 04-0120R4
CONTRACT CHANGE ORDER NO. 247
SHEET 14 OF 24

WIRELESS MAGNETOMETER VEHICLE DETECTION STATION
(LOCATIONS 5)

NO SCALE

CCO-E13

THIS PLAN ACCURATE FOR ELECTRICAL WORK ONLY.

REVISED BY	DATE REVISED

CALCULATED-DESIGNED BY	CHECKED BY

FUNCTIONAL SUPERVISOR: Elaine T. Wong

STATE OF CALIFORNIA - DEPARTMENT OF TRANSPORTATION
Caltrans ELECTRICAL

LAST REVISION 12-26-07 | DATE PLOTTED => | TIME PLOTTED =>

USERNAME =>

CU | EA

Dist	COUNTY	ROUTE	POST MILES TOTAL PROJECT	SHEET No.	TOTAL SHEETS

REGISTERED ELECTRICAL ENGINEER DATE

PLANS APPROVAL DATE

THE STATE OF CALIFORNIA OR ITS OFFICERS OR AGENTS SHALL NOT BE RESPONSIBLE FOR THE ACCURACY OR COMPLETENESS OF COPIES OF THIS PLAN SHEET.

REGISTERED PROFESSIONAL ENGINEER
BEHZAD GOLEMOHAMMADI
No. 15283
Exp. 3/31/11
ELECTRICAL
STATE OF CALIFORNIA

B

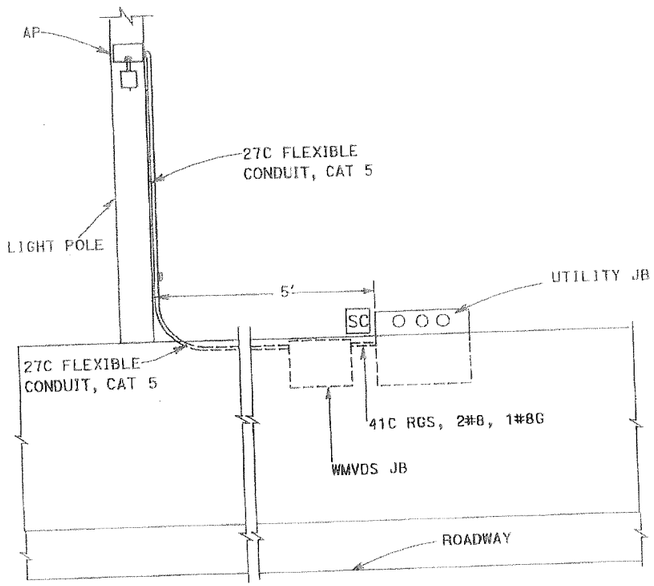

LOCATION 7

(LOWER DECK
1 mile away east of the 5 curve)

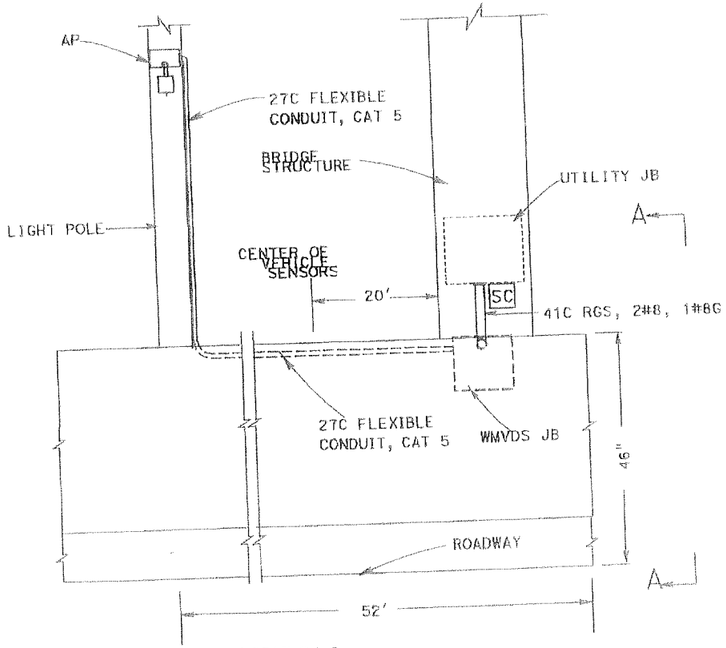

LOCATION 6

(LOWER DECK
100ft form the beginning of the 5 curve)

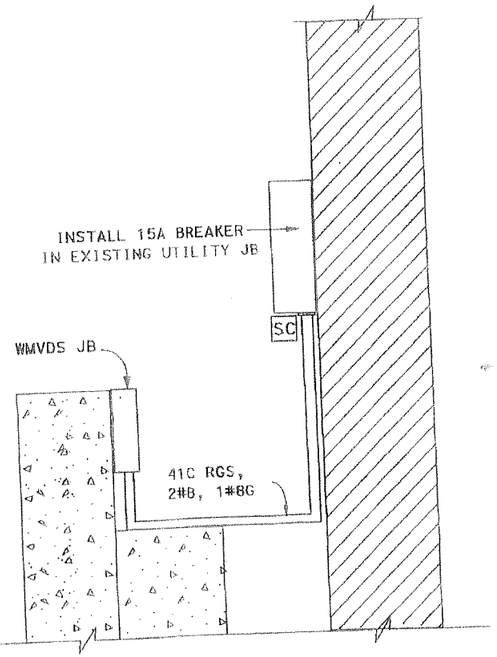

SECTION A-A

ABBREVIATIONS

JB	JUNCTION BOX
AP	ACCESSPOINT
WMVDS	WIRELESS MAGNETOMETER VEHICLE DETECTION STATION

GENERAL NOTE

(This sheet only)

1. THE EXACT LOCATIONS OF SENSORS WILL BE DETERMINED BY CALTRANS FIELD ENGINEER.
2. SECURE CONDUIT TO THE K-RAIL (BARRIER RAIL), BRIDGE STRUCTURE WITH GALVANIZED CLAPS OR AS DIRECTED BY THE ENGINEER.
3. SEE SHEET CCO-E22 AND CCO-E23 FOR MOUNTING DETAILS
4. SEE SHEET CCO-E20 FOR WIRELESS MAGNETOMETER VEHICLE DETECTION STATION DETAILS
5. SEE SHEET CCO-E19 FOR WIRING DETAIL AND EQUIPMENT LAYOUT

CONTRACT NO. 04-0120R4

CONTRACT CHANGE ORDER NO. 247

SHEET 15 OF 24

WIRELESS MAGNETOMETER VEHICLE DETECTION STATION

(LOCATIONS 6, AND 7)

NO SCALE

CCO-E14

THIS PLAN ACCURATE FOR ELECTRICAL WORK ONLY.

USERNAME =

CU	EA

LAST REVISION DATE PLOTTED =
12-26-07 TIME PLOTTED =

REVISED BY	DATE REVISED

CALCULATED-DESIGNED BY

CHECKED BY

FUNCTIONAL SUPERVISOR

DEPARTMENT OF TRANSPORTATION - STATE OF CALIFORNIA

ELECTRICAL

Caltrans

Dist	COUNTY	ROUTE	POST MILES TOTAL PROJECT	SHEET No.	TOTAL SHEETS

REGISTERED ELECTRICAL ENGINEER DATE

PLANS APPROVAL DATE

THE STATE OF CALIFORNIA ... OR AGENTS SHALL NOT BE RESPONSIBLE FOR ... THE ACCURACY OR ... COPIES OF THIS ...

REGISTERED PROFESSIONAL ENGINEER No. ... Exp. ... ELECT STATE OF CAL IFORNIA

REGISTERED PROFESSIONAL ENGINEER BEHZAD GOLEMOHAMMADI No. 15283 Exp. 3/31/11 ELECTRICAL STATE OF CALIFORNIA

REVISED BY | DATE REVISED

CALCULATED-DESIGNED BY | CHECKED BY

FUNCTIONAL SUPERVISOR

OF CALIFORNIA - DEPARTMENT OF TRANSPORTATION

Caltrans ELECTRICAL

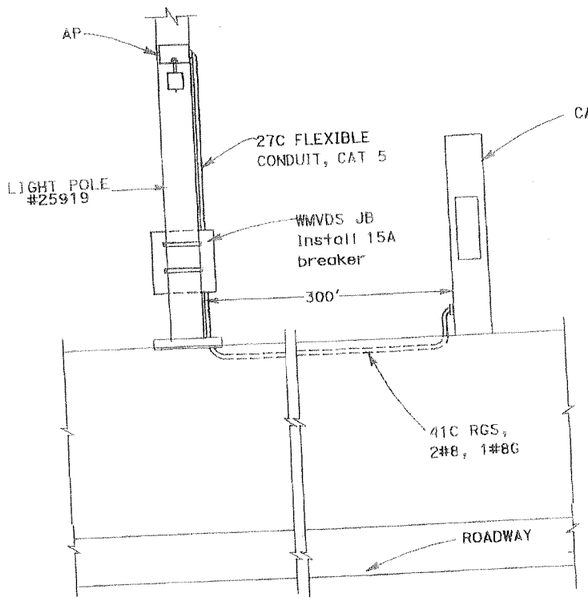

LOCATION 9

(UPPER DECK
1 mile away east of the S curve)

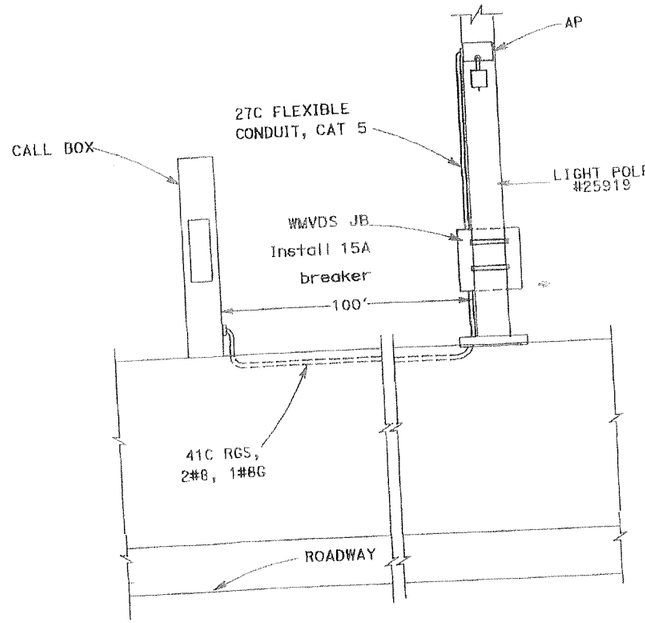

LOCATION 8

(UPPER DECK
1.5 mile away east of the S curve)

ABBREVIATIONS

JB	JUNCTION BOX
AP	ACCESSPOINT
WMVDS	WIRELESS MAGNETOMETER VEHICLE DETECTION STATION

GENERAL NOTE

(This sheet only)

1. THE EXACT LOCATIONS OF SENSORS WILL BE DETERMINED BY CALTRANS FIELD ENGINEER.
2. SECURE CONDUIT TO THE K-RAIL (BARRIER RAIL), BRIDGE STRUCTURE WITH GALVANIZED CLAPS OR AS DIRECTED BY THE ENGINEER.
3. SEE SHEET CCO-E22 AND CCO-E23 FOR MOUNTING DETAILS
4. SEE SHEET CCO-E20 FOR WIRELESS MAGNETOMETER VEHICLE DETECTION STATION DETAILS
5. SEE SHEET CCO-E19 FOR WIRING DETAIL AND EQUIPMENT LAYOUT

CONTRACT NO. 04-012OR4

CONTRACT CHANGE ORDER NO 247

SHEET 16 OF 24

WIRELESS MAGNETOMETER VEHICLE DETECTION STATION

(LOCATIONS 8, AND 9)

NO SCALE

CCO-E15

LAST REVISED | DATE PLOTTED => 12-25-07 | TIME PLOTTED =>

THIS PLAN ACCURATE FOR ELECTRICAL WORK ONLY.

CU | EA

Dist	COUNTY	ROUTE	POST MILES TOTAL PROJECT	SHEET No.	TOTAL SHEETS

REGISTERED ELECTRICAL ENGINEER DATE

PLANS APPROVAL DATE

THE STATE OF CALIFORNIA, ITS OFFICERS OR AGENTS SHALL NOT BE RESPONSIBLE FOR THE ACCURACY OR COMPLETENESS OF COPIES OF THIS PLAN SHEET.

REGISTERED PROFESSIONAL ENGINEER
BEHZAD GOLEMOHAMMADI
No. 15283
Exp. 3/31/15
ELECTRICAL
STATE OF CALIFORNIA

REGISTERED PROFESSIONAL ENGINEER
No.
Exp.
ELECT
STATE OF CALIFORNIA

REVISED BY	DATE REVISED

CALCULATED-DESIGNED BY

CHECKED BY

FUNCTIONAL SUPERVISOR

DEPARTMENT OF TRANSPORTATION

ELECTRICAL

OF CALIFORNIA

Caltrans

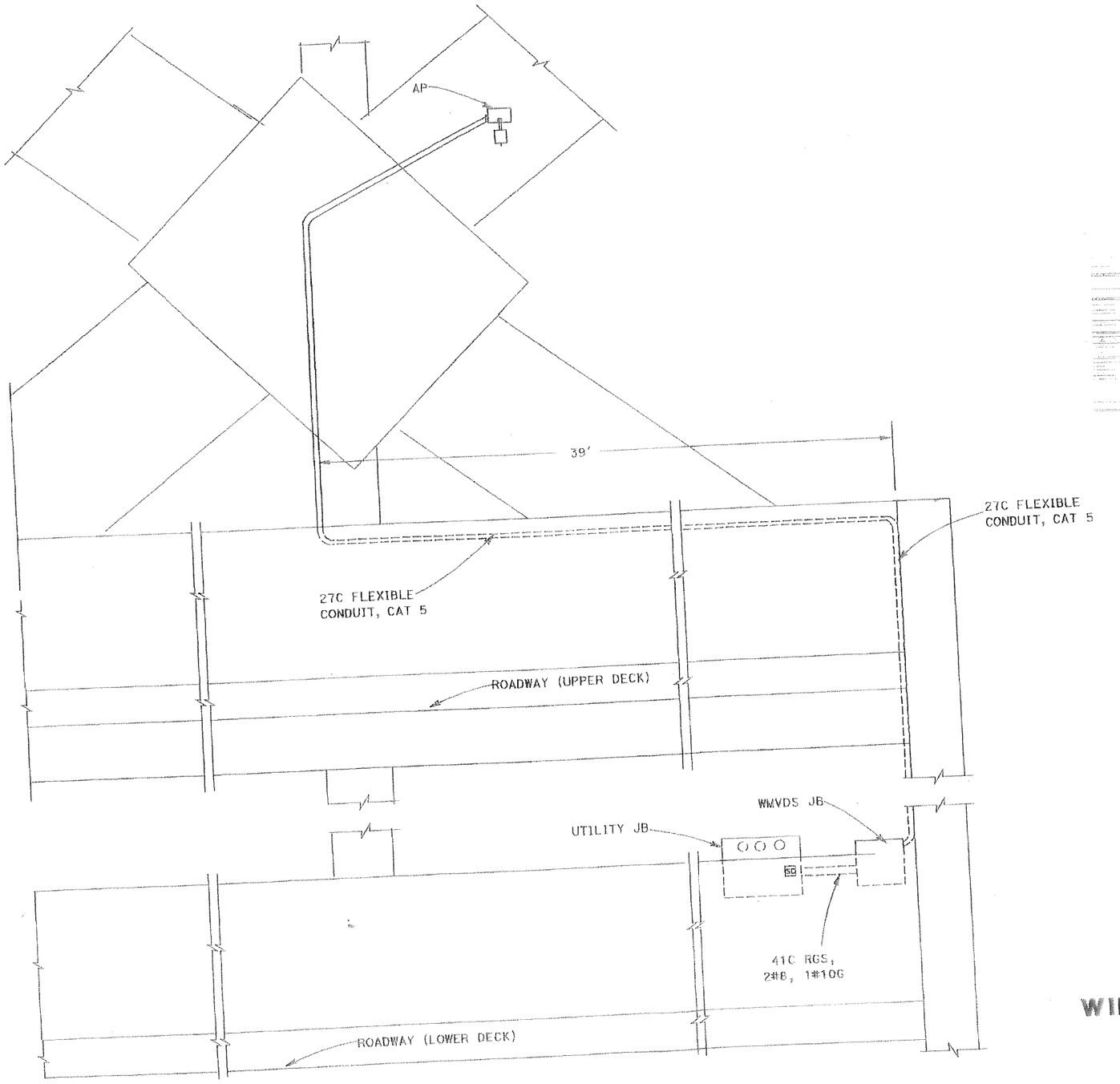

LOCATION 10
(UPPER DECK
0.5 MILE away west of the S curve)

THIS PLAN ACCURATE FOR ELECTRICAL WORK ONLY.

ABBREVIATIONS

JB	JUNCTION BOX
AP	ACCESSPOINT
WMVDS	WIRELESS MAGNETOMETER VEHICLE DETECTION STATION

GENERAL NOTE
(This sheet only)

1. THE EXACT LOCATIONS OF SENSORS WILL BE DETERMINED BY CALTRANS FIELD ENGINEER.
2. SECURE CONDUIT TO THE K-RAIL (BARRIER RAIL), BRIDGE STRUCTURE WITH GALVANIZED CLAPS OR AS DIRECTED BY THE ENGINEER.
3. SEE SHEET CCO-E22 AND CCO-E23 FOR MOUNTING DETAILS
4. SEE SHEET CCO-E20 FOR WIRELESS MAGNETOMETER VEHICLE DETECTION STATION DETAILS
5. SEE SHEET CCO-E19 FOR WIRING DETAIL AND EQUIPMENT LAYOUT

CONTRACT NO. 04-012024
CONTRACT CHANGE ORDER NO. 242
SHEET 17 OF 24

WIRELESS MAGNETOMETER VEHICLE DETECTION STATION

(LOCATION 10)

NO SCALE

CCO-E16

LAST REVISION DATE PLOTTED =>
12-25-07 TIME PLOTTED =>

Dist	COUNTY	ROUTE	POST MILES TOTAL PROJECT	SHEET No.	TOTAL SHEETS

REGISTERED ELECTRICAL ENGINEER DATE

PLANS APPROVAL DATE

REGISTERED PROFESSIONAL ENGINEER No. Exp. ELECT STATE OF CALIFORNIA

THE STATE OF CALIFORNIA OR ITS OFFICERS OR AGENTS SHALL NOT BE RESPONSIBLE FOR THE ACCURACY OR COMPLETENESS OF ELECTRONIC COPIES OF THIS PLAN SHEET.

GENERAL NOTE
(This sheet only)

1. THE EXACT LOCATIONS OF SENSORS WILL BE DETERMINED BY CALTRANS FIELD ENGINEER.
2. SECURE CONDUIT TO THE K-RAIL (BARRIER RAIL), BRIDGE STRUCTURE WITH GALVANIZED CLAPS OR AS DIRECTED BY THE ENGINEER.
3. SEE SHEET CCO-E22 AND CCO-E23 FOR MOUNTING DETAILS
4. SEE SHEET CCO-E20 FOR WIRELESS MAGNETOMETER VEHICLE DETECTION STATION DETAILS
5. SEE SHEET CCO-E19 FOR WIRING DETAIL AND EQUIPMENT LAYOUT

ABBREVIATIONS

JB	JUNCTION BOX
AP	ACCESSPOINT
WMVDS	WIRELESS MAGNETOMETER VEHICLE DETECTION STATION

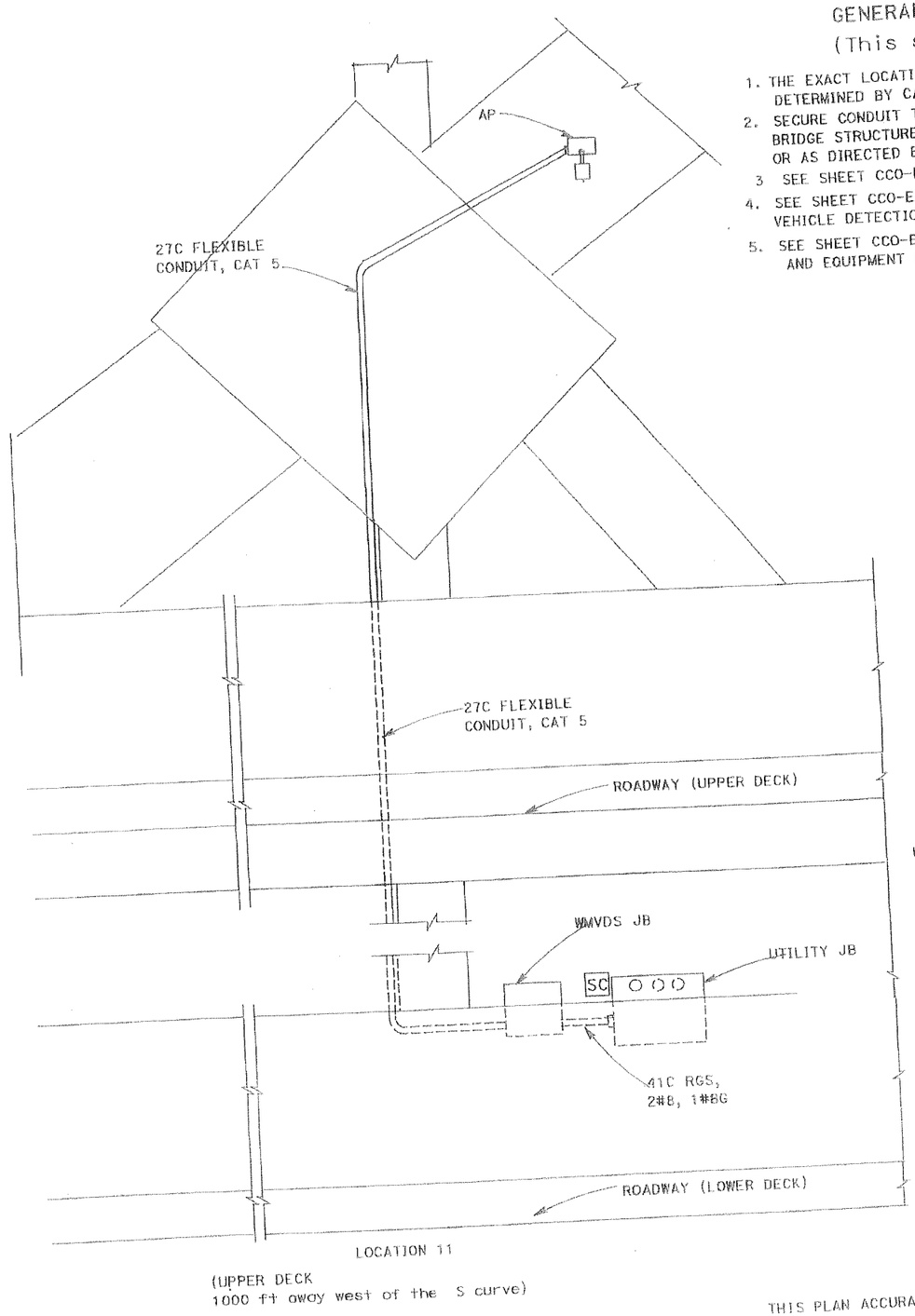

LOCATION 11

(UPPER DECK
1000 ft away west of the S curve)

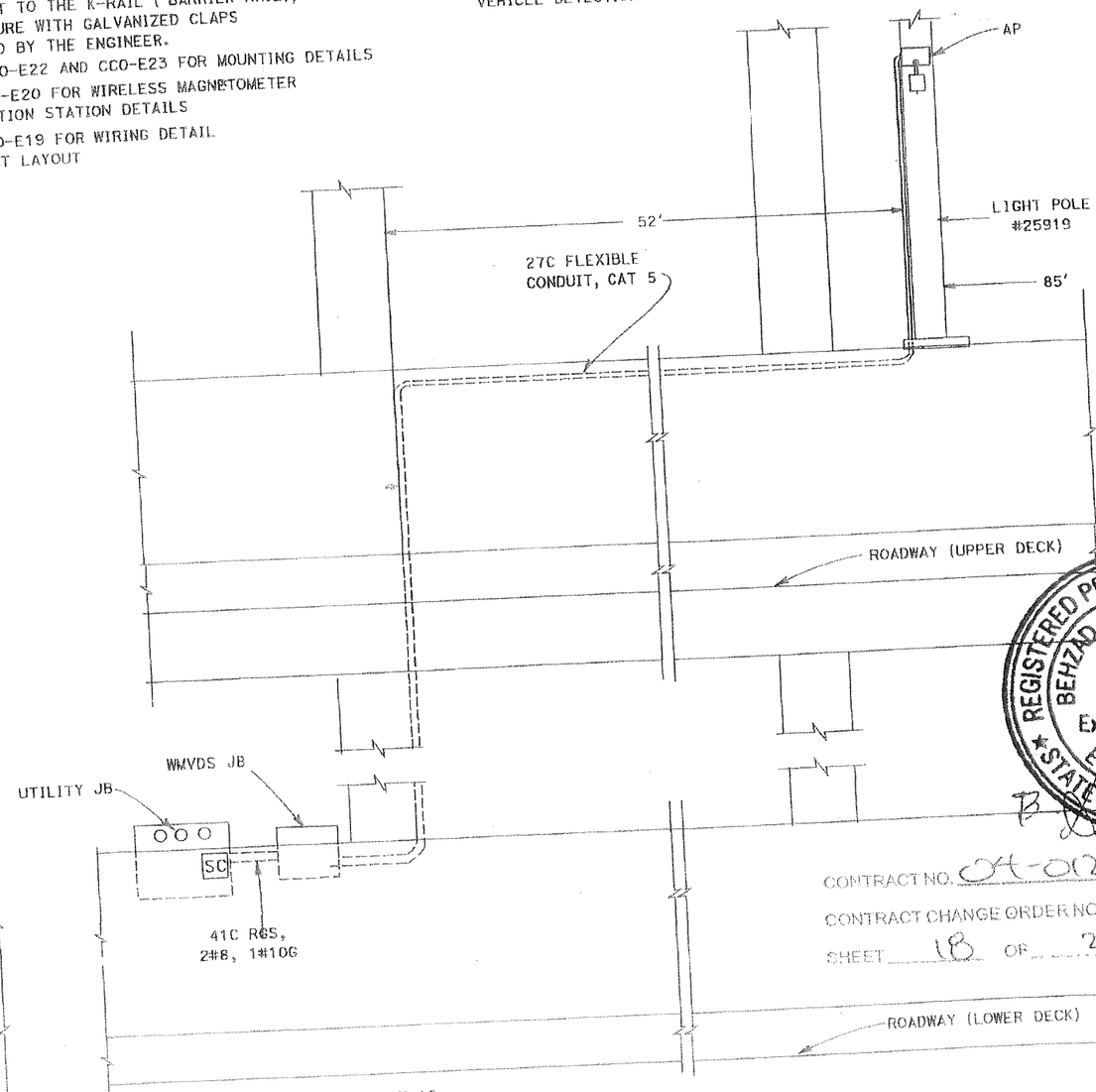

LOCATION 12

(UPPER DECK
100 FT before the S curve)

REGISTERED PROFESSIONAL ENGINEER BEHZAD GOLESHANI No. 15283 Exp. 3/31/11 ELECTRICAL STATE OF CALIFORNIA

CONTRACT NO. 04-0120R4

CONTRACT CHANGE ORDER NO. 247

SHEET 18 OF 24

WIRELESS MAGNETOMETER VEHICLE DETECTION STATION

(LOCATION 11 AND 12)

NO SCALE

CCO-E17

LAST REVISION | DATE PLOTTED => 12-26-07 | TIME PLOTTED =>

THIS PLAN ACCURATE FOR ELECTRICAL WORK ONLY.

CU | EA

REVISED BY | DATE REVISED

CALCULATED-DESIGNED BY | CHECKED BY

FUNCTIONAL SUPERVISOR

OF CALIFORNIA - DEPARTMENT OF TRANSPORTATION

Caltrans ELECTRICAL

Dist	COUNTY	ROUTE	POST MILES TOTAL PROJECT	SHEET No.	TOTAL SHEETS

REGISTERED ELECTRICAL ENGINEER DATE

PLANS APPROVAL DATE

THE STATE OF CALIFORNIA OR ITS OFFICERS OR AGENTS SHALL NOT BE RESPONSIBLE FOR THE ACCURACY OR COMPLETENESS OF ELECTRONIC COPIES OF THIS PLAN SHEET.

REGISTERED PROFESSIONAL ENGINEER — No. — Exp. — ELECT. — STATE OF CALIFORNIA

CONTRACT NO. 04120E4

CONTRACT CHANGE ORDER NO. 247

SHEET 19 OF 24

REGISTERED PROFESSIONAL ENGINEER — BEHZAD GOLEMOHAMMADY — No. 15283 — Exp. 3/31/11 — ELECTRICAL — STATE OF CALIFORNIA

GENERAL NOTE
(This sheet only)

1. THE EXACT LOCATIONS OF SENSORS WILL BE DETERMINED BY CALTRANS FIELD ENGINEER.
2. SECURE CONDUIT TO THE K-RAIL (BARRIER RAIL), BRIDGE STRUCTURE WITH GALVANIZED CLAPS OR AS DIRECTED BY THE ENGINEER.
3. SEE SHEET CCO-E22 AND CCO-E23 FOR MOUNTING DETAILS
4. SEE SHEET CCO-E20 FOR WIRELESS MAGNETOMETER VEHICLE DETECTION STATION DETAILS
5. SEE SHEET CCO-E19 FOR WIRING DETAIL AND EQUIPMENT LAYOUT

ABBREVIATIONS

JB	JUNCTION BOX
AP	ACCESSPOINT
WMVDS	WIRELESS MAGNETOMETER VEHICLE DETECTION STATION

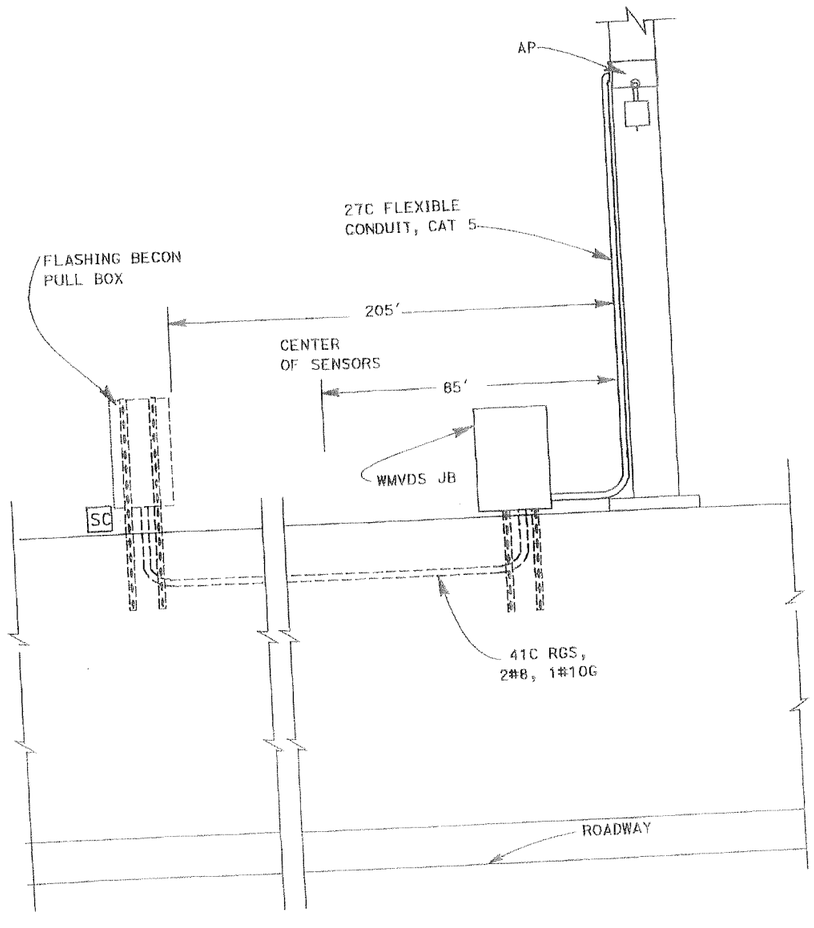

LOCATION 13

(UPPER DECK
100ft from the 2nd curve)

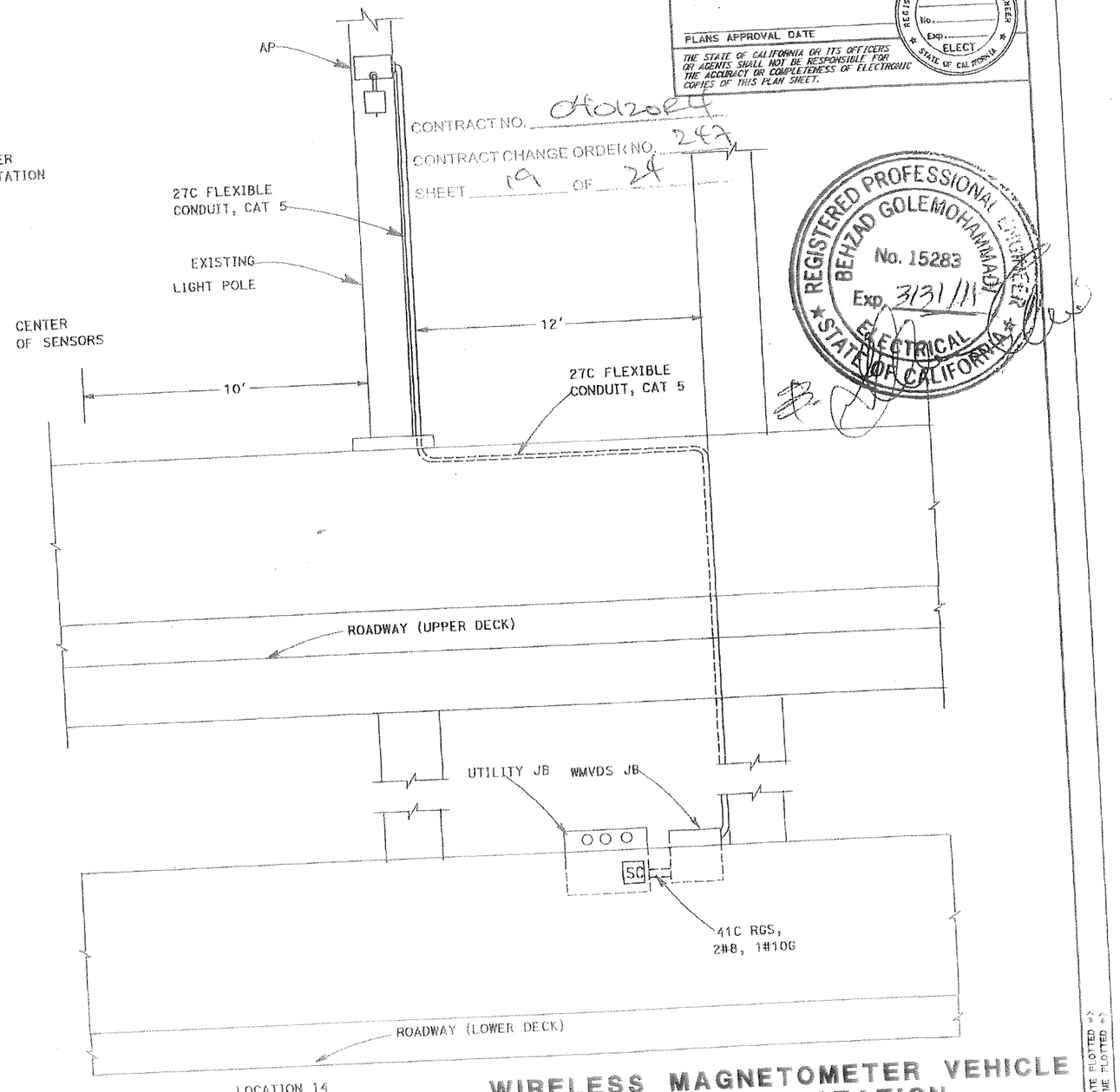

LOCATION 14

(UPPER DECK
1MILE away from S curve)

WIRELESS MAGNETOMETER VEHICLE DETECTION STATION (LOCATIONS 8 AND 9)

NO SCALE

CCO-E18

REVISED BY | DATE REVISED

CALCULATED-DESIGNED BY | CHECKED BY

FUNCTIONAL SUPERVISOR

DEPARTMENT OF TRANSPORTATION - STATE OF CALIFORNIA

ELECTRICAL

Caltrans

LAST REVISION DATE PLOTTED => 12-26-07 TIME PLOTTED =>

THIS PLAN ACCURATE FOR ELECTRICAL WORK ONLY.

USERNAME => s128500

CU | EA

Dist	COUNTY	ROUTE	POST MILES TOTAL PROJECT	SHEET No.	TOTAL SHEETS

REGISTERED ELECTRICAL ENGINEER DATE

PLANS APPROVAL DATE

REGISTERED PROFESSIONAL ENGINEER No. Exp. ELECT STATE OF CALIFORNIA

THE STATE OF CALIFORNIA OR ITS OFFICERS OR AGENTS SHALL NOT BE RESPONSIBLE FOR THE ACCURACY OR COMPLETENESS OF ELECTRONIC COPIES OF THIS PLAN SHEET.

REGISTERED PROFESSIONAL ENGINEER BEHZAD GOLEMOHAMMADI No. 15283 Exp. 3/31/11 ELECTRICAL STATE OF CALIFORNIA

REVISED BY	DATE REVISED

CALCULATED-DESIGNED BY	CHECKED BY

FUNCTIONAL SUPERVISOR

DEPARTMENT OF TRANSPORTATION – STATE OF CALIFORNIA

ELECTRICAL

Caltrans

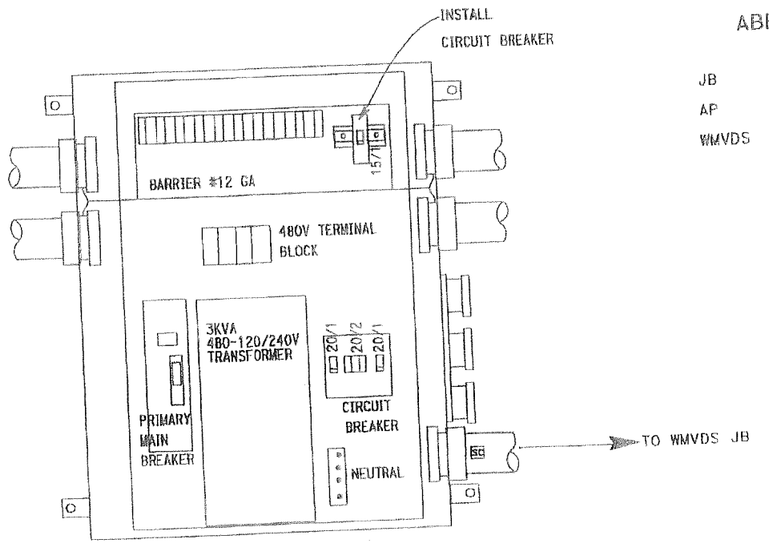

DETAIL A

ELECTRICAL UTILITY JB

ABBREVIATIONS

JB	JUNCTION BOX
AP	ACCESSPOINT
WMVDS	WIRELESS MAGNETOMETER VEHICLE DETECTION STATION

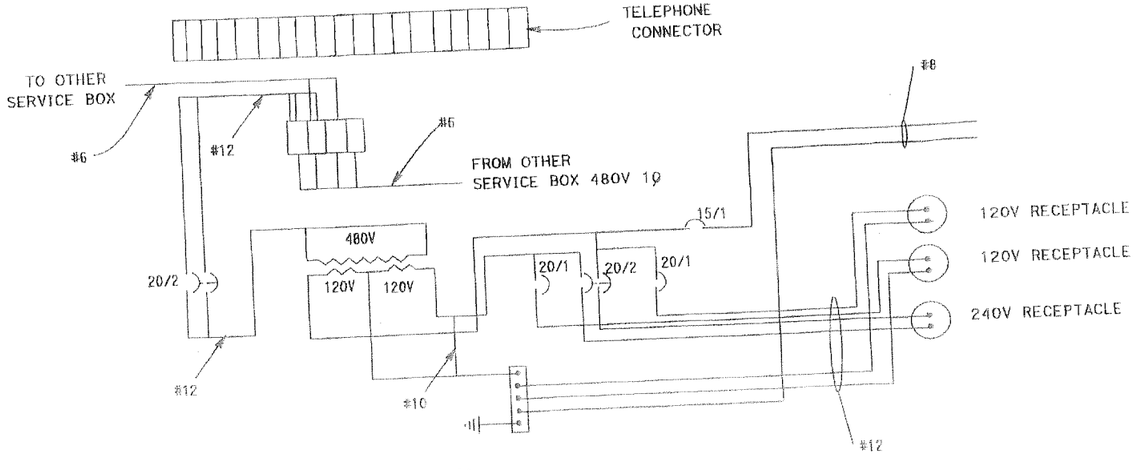

DETAIL B

WIRING DETAILS FOR UTILITY JB

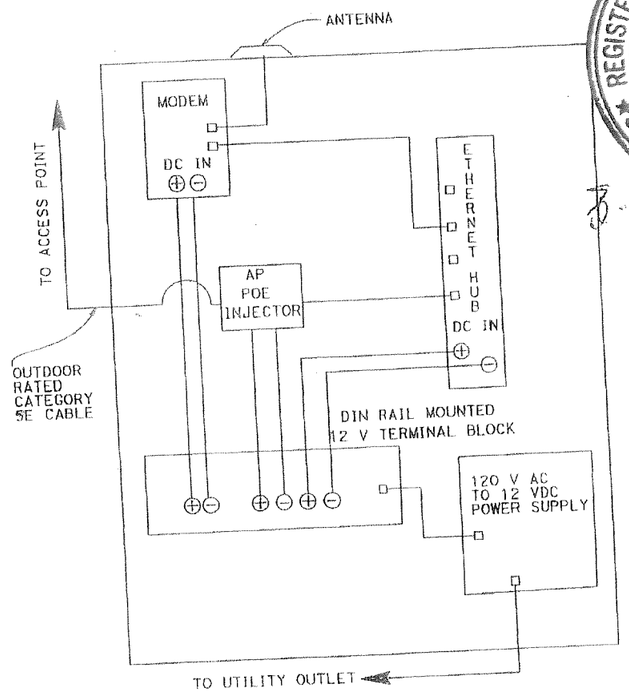

DETAIL C

TYPICAL WMVDS JB EQUIPMENT LAYOUT

CONTRACT NO. 09-0120R4

CONTRACT CHANGE ORDER NO. 247

SHEET 20 OF 24

WIRELESS MAGNETOMETER VEHICLE DETECTION STATION

WIRING DIAGRAM

NO SCALE

CCO-E19

LAST REVISION DATE PLOTTED => 12-26-07 TIME PLOTTED =>

THIS PLAN ACCURATE FOR ELECTRICAL WORK ONLY.

CU	EA

Dist	COUNTY	ROUTE	POST MILES TOTAL PROJECT	SHEET No.	TOTAL SHEETS

REGISTERED ELECTRICAL ENGINEER

PLANS APPROVAL DATE

THE STATE OF CALIFORNIA OR ITS OFFICERS OR AGENTS SHALL NOT BE RESPONSIBLE FOR THE ACCURACY OR COMPLETENESS OF ELECTRONIC COPIES OF THIS PLAN SHEET.

REGISTERED PROFESSIONAL ENGINEER — No. — Exp. — ELECT — STATE OF CALIFORNIA

DATE REVISED	REVISED BY

CALCULATED-DESIGNED BY

CHECKED BY

FUNCTIONAL SUPERVISOR

STATE OF CALIFORNIA - DEPARTMENT OF TRANSPORTATION

ELECTRICAL

Caltrans

VEHICLE SENSOR NODE INSTALLATION PROCEDURE

1. PRIOR TO INSTALLATION, IDENTIFY VEHICLE SENSOR NODE'S ID, LANE NUMBER, AND LOCATION IN LANE.
2. MAKE SURE THE VEHICLE SENSOR NODE IS ENCAPSULATED BY A REQUIRED PLASTIC SHELL.
3. MAKE SURE THE VEHICLE SENSOR NODE INSTALLS FLAT IN THE CORED HOLED AND IS NOT TILTED.
4. USE THE HEAT-GUN OR HOT COMPRESSED AIR TO DRY THE INSIDE OF THE CORED HOLE. THERE MUST BE ABSOLUTELY NO MOISTURE ON THE APPLIED SURFACE.
5. FILL THE HOLE ABOUT 1/4" FULL OF THE SEALANT.
6. PLACE VEHICLE SENSOR NODE IN THE HOLE WITH ARROW POINTING IN THE DIRECTION OF TRAFFIC. THE SEALANT SHOULD STILL HAVE WORK TIME, SO THE VEHICLE SENSOR NODE CAN BE ROTATED TO THE CORRECT ORIENTATION. PUSH VEHICLE SENSOR NODE DOWN SO IT LAYS FLAT ON THE BOTTOM OF THE HOLE.
7. FILL THE HOLE WITH THE REMAINING SEALANT TO COVER THE VEHICLE SENSOR NODE. LEVEL SEALANT WITH THE SURFACE OF THE ROAD.
8. AFTER THE FIRST APPLICATION, DO NOT LET THE SEALANT SIT FOR MORE THAN 30 SECONDS BEFORE THE NEXT APPLICATION.
9. DEPENDING ON AMBIENT TEMPERATURE AND HUMIDITY, SEALANT DRYING TIME WILL VARY FROM 5 MINUTES TO 15 MINUTES. VERIFY HARDNESS OF SEALANT BEFORE REOPENING THE LANE FOR TRAFFIC.
10. RECORD DISTANCES BETWEEN EACH VEHICLE SENSOR NODE PAIR.

LEGEND

DIRECTION OF TRAFFIC

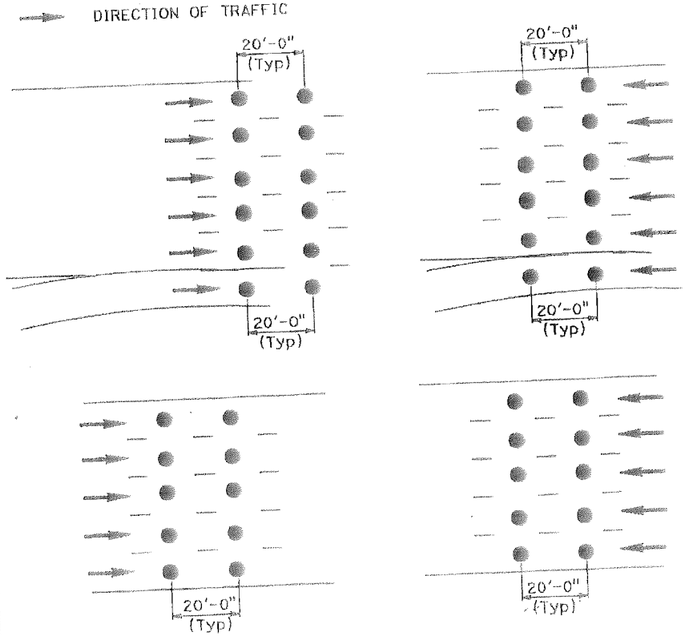

DETAIL "TM"

WMVDS NOTES

FREEWAY MAINLINE DETECTOR DESIGNATION: N 3-2

- N=NORTHBOUND LANES (NB)
- S=SOUTHBOUND LANES (SB)
- E=EASTBOUND LANES (EB)
- W=WESTBOUND LANES (WB)

NUMBER OF LANES FROM LEFT WITH RESPECT TO DIRECTION OF TRAFFIC:

- 1=FIRST LANE FROM LEFT
- 2=SECOND LANE FROM LEFT
- 3=THIRD LANE FROM LEFT
- 4=FOURTH LANE FROM LEFT

NUMBER OF VSN IN THE SAME LANE:

- 1=ENTERING DETECTOR
- 2=LEAVING DETECTOR

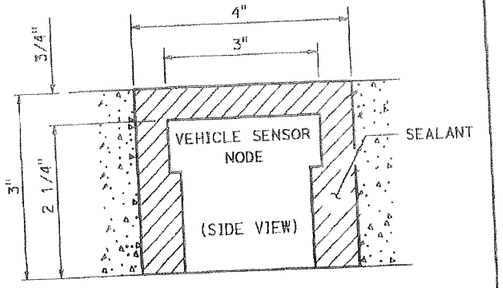

DETAIL B

VEHICLE SENSOR NODE INSTALLED IN ROADWAY

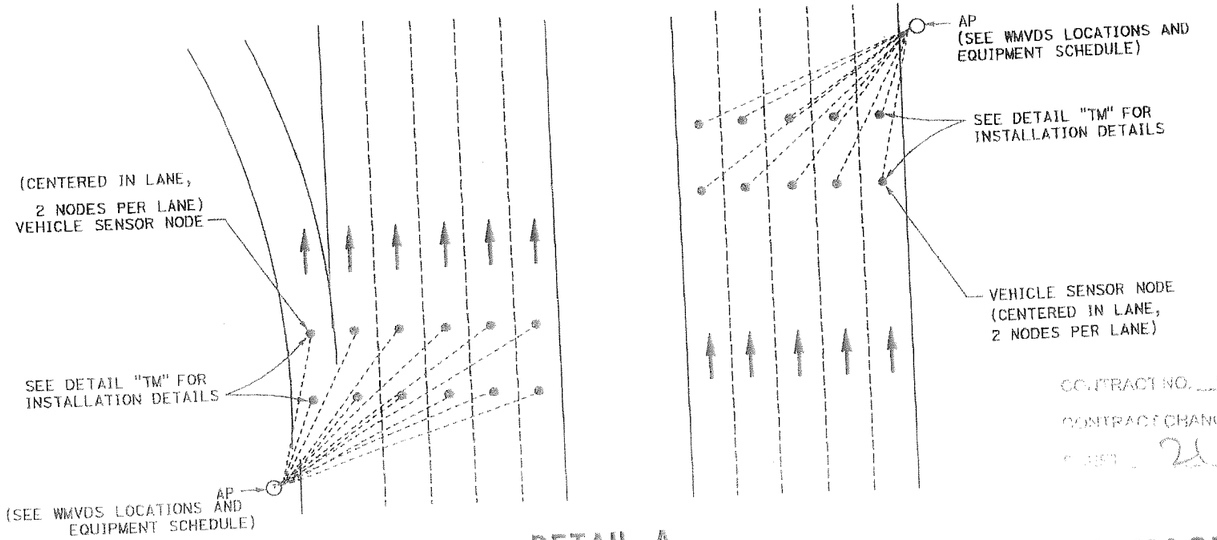

DETAIL A

VEHICLE SENSOR NODE PLACEMENT DETAIL

REGISTERED PROFESSIONAL ENGINEER — BEHZAD GOLEMOHAMMADI — No. 15283 — Exp. 3/31/11 — ELECTRICAL — STATE OF CALIFORNIA

CONTRACT NO. 04-012084

CONTRACT CHANGE ORDER NO. 247

EA 21 OF 24

WIRELESS MAGNETOMETER VEHICLE DETECTION STATION

NO SCALE

CCO-E20

THIS PLAN ACCURATE FOR ELECTRICAL WORK ONLY.

USERNAME => s128500

LAST REVISION: DATE PLOTTED => 26-MAR-2010 TIME PLOTTED => 14:01

12-26-07

CU	EA

Dist	COUNTY	ROUTE	POST MILES TOTAL PROJECT	SHEET No.	TOTAL SHEETS

REGISTERED ELECTRICAL ENGINEER DATE

PLANS APPROVAL DATE

THE STATE OF CALIFORNIA OR ITS OFFICERS OR AGENTS SHALL NOT BE RESPONSIBLE FOR THE ACCURACY OR COMPLETENESS OF ELECTRONIC COPIES OF THIS PLAN SHEET.

REGISTERED PROFESSIONAL ENGINEER
No.
Exp.
ELECT
STATE OF CALIFORNIA

REGISTERED PROFESSIONAL ENGINEER
BEHZAD GOLEMOHAMMADI
No. 15283
Exp. 3/31/11
ELECTRICAL
STATE OF CALIFORNIA

REVISED BY	DATE REVISED

CALCULATED-DESIGNED BY

CHECKED BY

FUNCTIONAL SUPERVISOR

DEPARTMENT OF TRANSPORTATION - STATE OF CALIFORNIA

ELECTRICAL

Caltrans

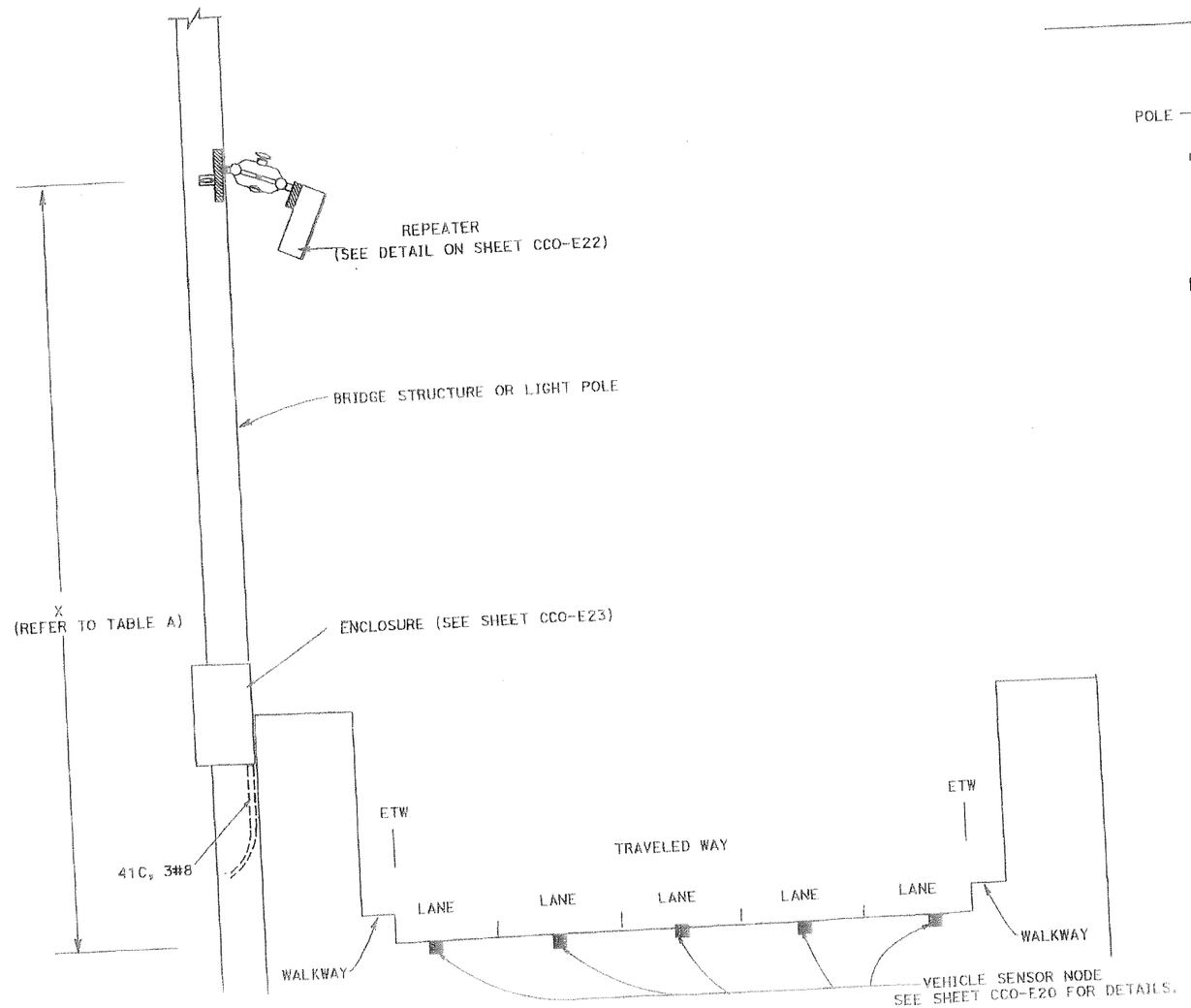

TYPICAL LAYOUT

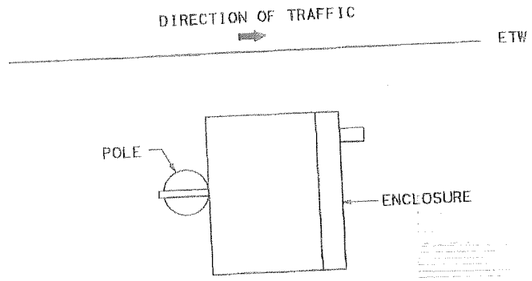

LOCATION OF ENCLOSURE

TABLE A

HEIGHT OF AP RELATIVE TO THE ROADWAY	MAX RECOMMANDED DISTANCE AP TO SENSOR
X = 18 FT	100 - 125 FT
X = 20 FT	125 - 175 FT

ABBREVIATIONS:

WMVDS = WIRELESS MAGNETOMETER VEHICLE DETECTION STATION
AP = ACCESS POINT
POE = POWER OVER ETHERNET
VSN = VEHICLE SENSOR NODE

CONTRACT NO. 09-0120R4
CONTRACT CHANGE ORDER NO 247
SHEET 22 OF 24

GENERAL NOTES:

1. PULL BOX COVERS SHALL BE MARKED "TOS, CALTRANS".
2. SEE SHEET CCO-E20 FOR LOCATION AND EQUIPMENT SCHEDULE.
3. EXISTING UTILITY FACILITIES HAVE NOT BEEN POSITIVELY LOCATED.

WIRELESS MAGNETOMETER VEHICLE DETECTION STATION

(LAYOUT)

NO SCALE

CCO-E21

LAST REVISION	DATE PLOTTED => 26-MAR-2010
12-26-07	TIME PLOTTED => 14:01

THIS PLAN ACCURATE FOR ELECTRICAL WORK ONLY.

CU	EA

REVISED BY	DATE REVISED

CALCULATED-DESIGNED BY	CHECKED BY

FUNCTIONAL SUPERVISOR

STATE OF CALIFORNIA - DEPARTMENT OF TRANSPORTATION

Caltrans ELECTRICAL

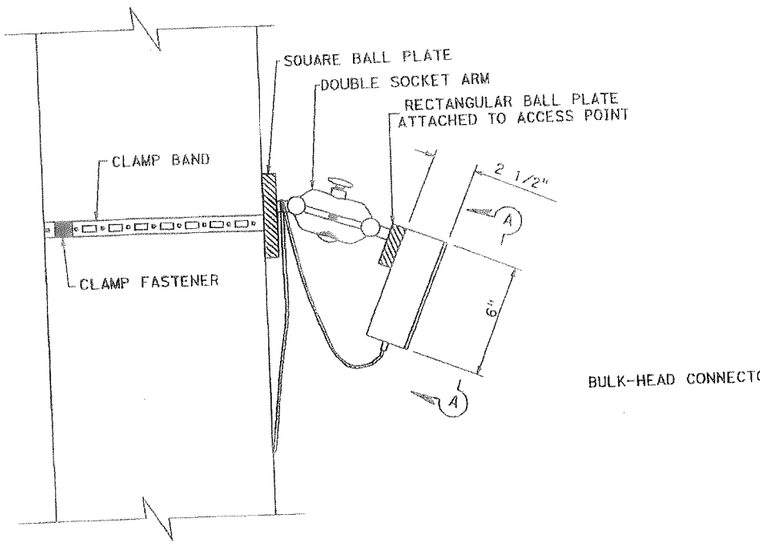

DETAIL C
ACCESS POINT MOUNTING DETAIL

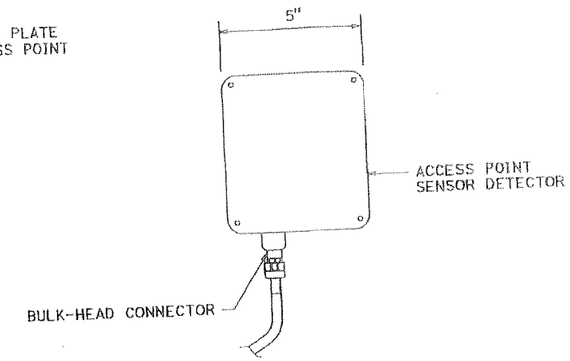

SECTION A-A

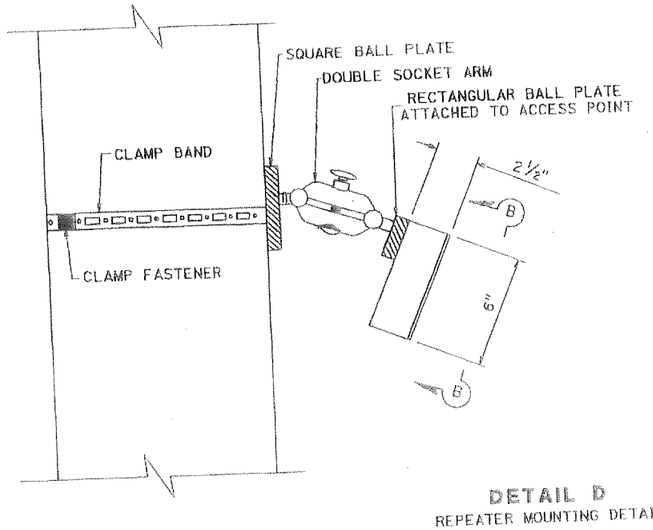

DETAIL D
REPEATER MOUNTING DETAIL

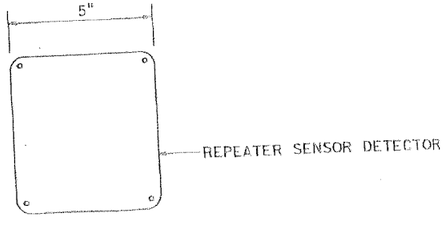

SECTION B-B

Dist	COUNTY	ROUTE	POST MILES TOTAL PROJECT	SHEET No.	TOTAL SHEETS

REGISTERED ELECTRICAL ENGINEER DATE

PLANS APPROVAL DATE

THE STATE OF CALIFORNIA OR ITS OFFICERS OR AGENTS SHALL NOT BE RESPONSIBLE FOR THE ACCURACY OR COMPLETENESS OF ELECTRONIC COPIES OF THIS PLAN SHEET.

REGISTERED PROFESSIONAL ENGINEER
No.
Exp.
ELECT
STATE OF CALIFORNIA

REGISTERED PROFESSIONAL ENGINEER
BEHZAD GOLEMOHAMMADI
No. 15283
Exp. 3/31/11
ELECTRICAL
STATE OF CALIFORNIA

ABBREVIATIONS

JB	JUNCTION BOX
AP	ACCESSPOINT
WMVDS	WIRELESS MAGNETOMETER VEHICLE DETRACTION STATION

SHEET NOTE
(This sheet only)

1. TO MOUNT THE ACCESS POINT UTILIZE ONE OF THE FOLLOWING METHODS.
   - A. UNISTRUT WITH THREADED ROD
   - B. UNISTRUT WITH BANDING STRAP
   - C. CONCRETE ANCHORS ON THE K.RAIL /BARRIER RAIL

AS DIRECTED BY THE ENGINEER

04-0120R4
CHANGE ORDER NO. 247
23 OF 24

WIRELESS MAGNETOMETER VEHICLE DETECTION STATION (ACCESS POINT AND REPEATER MOUNTING DETAILS)

NO SCALE

CCO-E22

THIS PLAN ACCURATE FOR ELECTRICAL WORK ONLY.

LAST REVISION DATE PLOTTED => 26-MAR-2010
12-26-07 TIME PLOTTED => 14:01

I:\Projects\st12650\Desktop\SEGBR\FTLNAL\022.dgn

Dist	COUNTY	ROUTE	POST MILES TOTAL PROJECT	SHEET No.	TOTAL SHEETS
04	Son,Mrn	101	Var	15	22

REGISTERED CIVIL ENGINEER DATE

1-7-08
PLANS APPROVAL DATE

THE STATE OF CALIFORNIA OR ITS OFFICERS OR AGENTS SHALL NOT BE RESPONSIBLE FOR THE ACCURACY OR COMPLETENESS OF ELECTRONIC COPIES OF THIS PLAN SHEET.

REGISTERED PROFESSIONAL ENGINEER No. Exp. CIVIL STATE OF CALIFORNIA

REGISTERED PROFESSIONAL ENGINEER BEHZAD GOLEMOHAMMADI No. 15283 Exp. 3/31/11 ELECTRICAL STATE OF CALIFORNIA

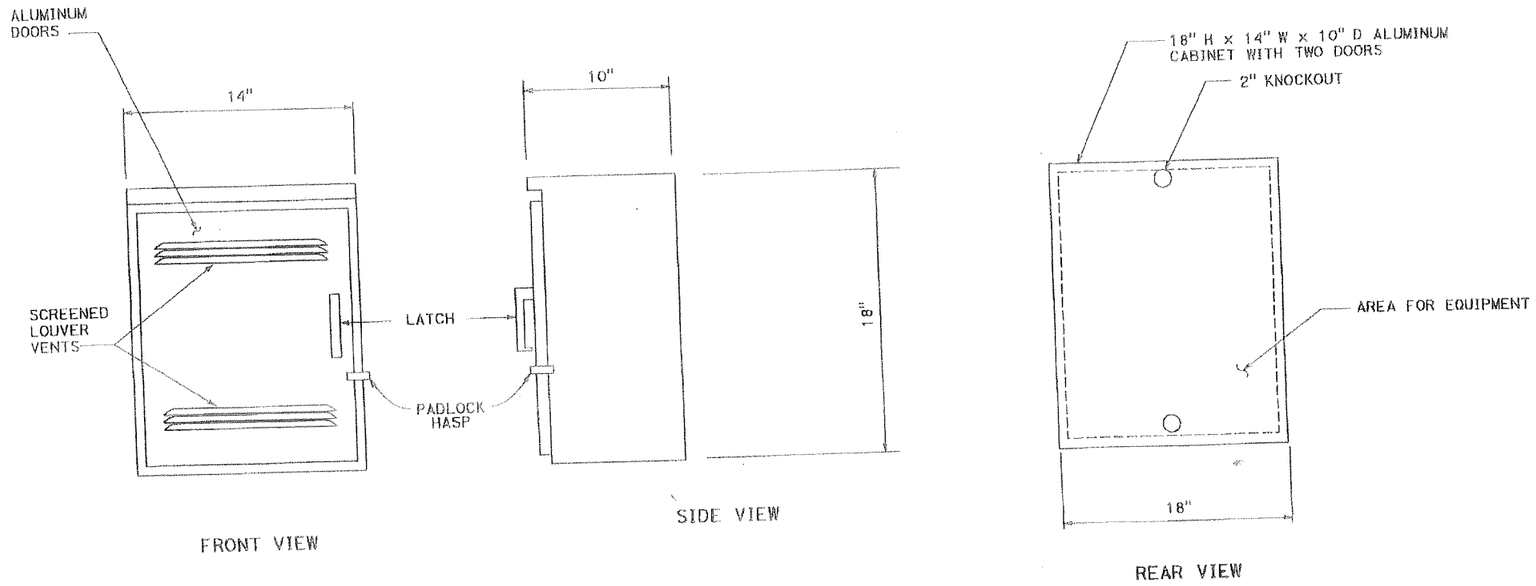

ABBREVIATIONS

JB	JUNCTION BOX
AP	ACCESSPOINT
WMVDS	WIRELESS MAGNETOMETER VEHICLE DETRACTION STATION

SHEET NOTE
(This sheet only)

1. TO MOUNT THE JUNCTION BOX UTILIZE ONE OF THE FOLLOWING METHODS.
   A. UNISTRUT WITH THREADED ROD
   B. UNISTRUT WITH BANDING STRAP
   C. CONCRETE ANCHORS ON THE K.RAIL /BARRIER RAIL

AS DIRECTED BY THE ENGINEER

CONTRACT NO. 04-012024
CONTRACT CHANGE ORDER NO. 247
SHEET 24 OF 24

WIRELESS MAGNETOMETER VEHICLE DETECTION STATION
(ENCLOSURE DETAILS)

THIS PLAN ACCURATE FOR ELECTRICAL WORK ONLY.

NO SCALE

CCO-E23

REVISED BY			
DATE REVISED			
CALCULATED-DESIGNED BY	JOEL MAGANA		
CHECKED BY	SUONG VU		
FUNCTIONAL SUPERVISOR	JEFF WOODY		

STATE OF CALIFORNIA - DEPARTMENT OF TRANSPORTATION
Caltrans SIGNS AND OVERHEAD STRUCTURES

DATE PLOTTED => 26-MAR-2010
TIME PLOTTED => 14:07
12-20-07

STATE OF CALIFORNIA - DEPARTMENT OF TRANSPORTATION

CONTRACT CHANGE ORDER

Change Requested by: Engineer

CCO: 248	Suppl. No. 0	Contract No. 04 - 0120R4	Road SF-80-12.6/13.2	FED. AID LOC.:

To: **CC MYERS INC**

You are directed to make the following changes from the plans and specifications or do the following described work not included in the plans and specifications for this contract. ***NOTE: This change order is not effective until approved by the Engineer.***

Description of work to be done, estimate of quantities and prices to be paid. (Segregate between additional work at contract price, agreed price and force account.) Unless otherwise stated, rates for rental of equipment cover only such time as equipment is actually used and no allowance will be made for idle time. This last percentage shown is the net accumulated increase or decrease from the original quantity in the Engineer's Estimate.

Modify the alignment and profile of the duct bank as shown on Pages No. 2 through 5 of this change order.

Adjustment of Compensation at Lump Sum:

Provide compensation to the Contractor for all additional costs incurred due to the conflict encountered during the installation of the duct bank from D Line Sta. 3+40 to 3+70 due to the presence of the existing 300 mm VCP sewer line and 150 mm force main sewer line.

For this work, the Contractor shall be compensated an agreed lump sum of $95,940.00 which constitutes full and final compensation, including all markups, for all additional costs incurred.

Cost of Adjustment of Compensation at Lump Sum $95,940.00

Any costs savings owed to the Department resulting from the eliminated portion of the duct bank from D Line Sta. 4+78 to 4+85 shall be provided for under Change Order No. 257.

Estimated Cost: Increase ☑ Decrease ☐ **$95,940.00**

By reason of this order the time of completion will be adjusted as follows: 0 days

Submitted by

Signature	Resident Engineer	Date
Jeannie Balderramos	JEANNIE BALDERRAMOS	9-2-10

Approval Recommended by

Signature	Area Construction Manager	Date
Deanna Vilcheck	DEANNA VILCHECK	9/7/10

Engineer Approval by

Signature	Area Construction Manager	Date
Deanna Vilcheck	DEANNA VILCHECK	10/6/10

We the undersigned contractor, have given careful consideration to the change proposed and agree, if this proposal is approved, that we will provide all equipment, furnish the materials, except as may otherwise be noted above, and perform all services necessary for the work above specified, and will accept as full payment therefor the prices shown above.

NOTE: If you, the contractor, do not sign acceptance of this order, your attention is directed to the requirements of the specifications as to proceeding with the ordered work and filing a written protest within the time therein specified.

Contractor Acceptance by

Signature	(Print name and title)	Date
	Steve Francis, Chief Estimator	9.17.10

DIST	COUNTY	ROUTE	KILOMETER POST TOTAL PROJECT	SHEET NO	TOTAL SHEETS
04	SF	80	12.6/13.2	20	137

REGISTERED CIVIL ENGINEER

T.T. Lai No. 63630 Exp. 9-30-08 CIVIL

PLANS APPROVAL DATE

The State of California or its officers or agents shall not be responsible for the accuracy or completeness of electronic copies of this plan sheet.

To get to the Caltrans web site, go to: http://www.dot.ca.gov

CONTRACT NO. 04-0120R4

CONTRACT CHANGE ORDER NO 248 So.

SHEET 2 OF 5

REGISTERED PROFESSIONAL ENGINEER TRINH I LAI C 63630 EXP 9/30/10 CIVIL STATE OF CALIFORNIA

DATE | REVISED BY | DATE REVISED

CALCULATED/ DESIGNED BY | CHECKED BY

PROJECT ENGINEER | T. T. LAI

STATE OF CALIFORNIA - DEPARTMENT OF TRANSPORTATION

Caltrans PROJECT DEVELOPMENT

SCA 2B

ESA 1A

ESA 1B

W5

W6

W7

SEE DETAIL A ON SHEET U-4

MATCH LINE - SEE SHEET U-3

"W" Line

"E" Line

"D" Line

52+00

53+00

54+00

PH-28 Tel Duct

PH-27 Tel Duct

Remove 250 mm Water Line (abd)

Remove Telephone Line (abd)

Remove Electrical Line

Remove 100mm G.I. line (abd)

Remove 150 mm Water Line (abd)

Remove Electrical Lines

Remove 250mm Water Line (abd)

Remove 100mm G.I. Line (abd)

Electrical Duct Bank

Remove 100mm G.I. Line (abd)

Remove 150mm Water Line (abd)

PH-46 Water/Elect

PH-47 Water

150mm Compressed Air

Remove Electrical Line

PH-14 Elect Duct

PH-13 Elect Duct

PH-15 Elect Duct

PH-18 Elect

PH-17 Elect Duct

PH-16 Elect Duct

PH-12 Elect Duct

Remove 50mm Water Line (abd)

SOUTH-SOUTH DETOUR

USCG RD

ALL DIMENSIONS ARE IN METERS UNLESS OTHERWISE SHOWN

FOR NOTES, ABBREVIATIONS &/OR LEGEND, SEE SHEET U-1

THIS PLAN ACCURATE FOR UTILITY WORK ONLY

CONTRACT CHANGE ORDER NO. 64

SHEET --- OF ---

UTILITY PLAN

SCALE 1:300

U-2R1

RELATIVE BORDER SCALE IS IN MILLIMETERS 0 20 40 60 80

USERNAME => s113377

DGN FILE => U-2R1.dgn

CU 04251

EA 0120R4

LAST REVISION 05-14-10 DATE PLOTTED => 28-JUL-2010

DIST	COUNTY	ROUTE	KILOMETER POST TOTAL PROJECT	SHEET No	TOTAL SHEETS
04	SF	80	12.6/13.2	21	137

Caltrans Metric

REGISTERED CIVIL ENGINEER

PLANS APPROVAL DATE

The State of California or its officers or agents shall not be responsible for the accuracy or completeness of electronic copies of this plan sheet.

REGISTERED PROFESSIONAL ENGINEER T.T. Lai No. 63630 Exp. 9-30-08 CIVIL STATE OF CALIFORNIA

To get to the Caltrans web site, go to: http://www.dot.ca.gov

ALL DIMENSIONS ARE IN METERS UNLESS OTHERWISE SHOWN

CONTRACT NO. 04-0120R4

CONTRACT CHANGE ORDER NO 248 S0

SHEET 3 OF 5

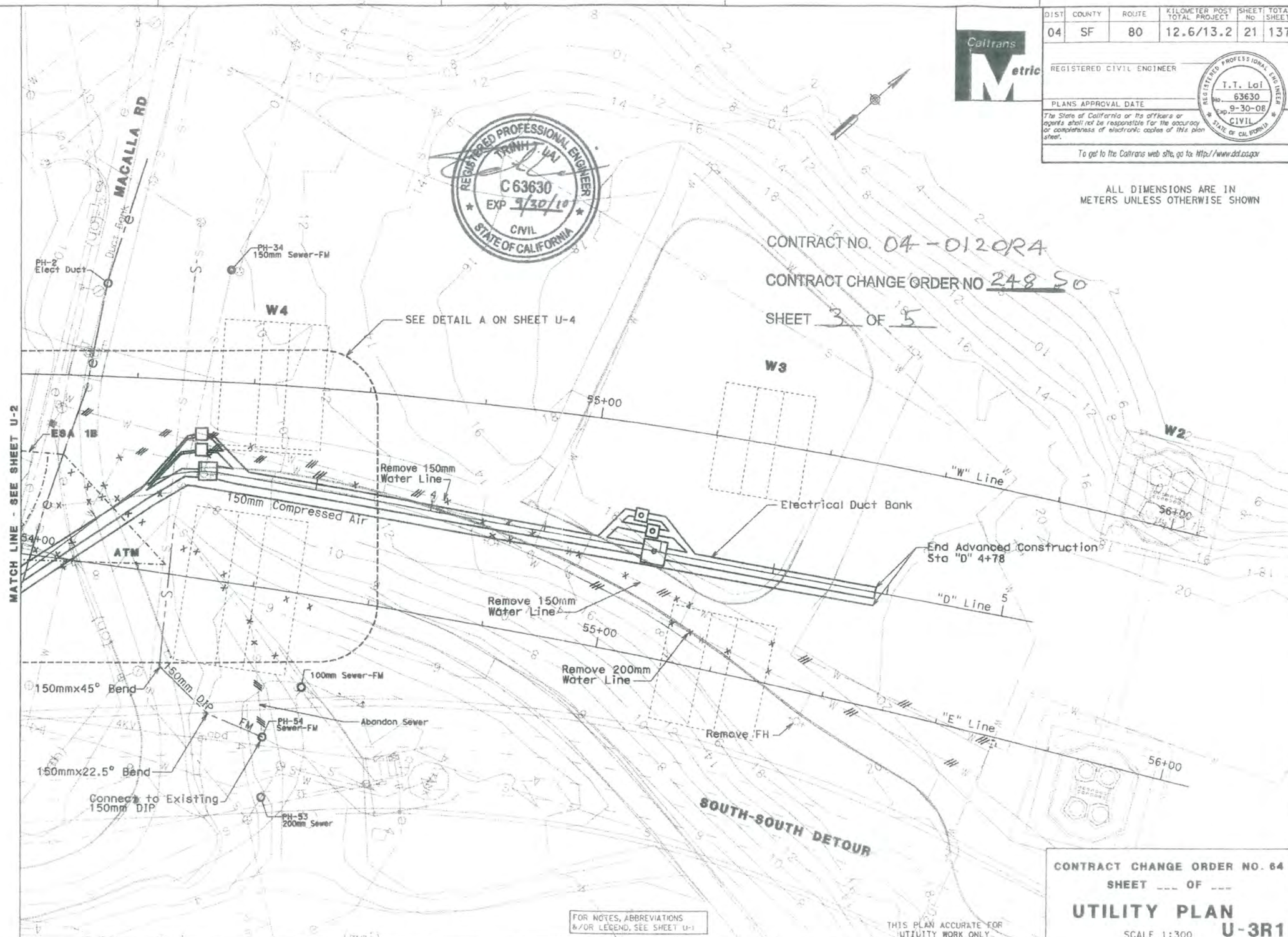

FOR NOTES, ABBREVIATIONS &/OR LEGEND, SEE SHEET U-1

THIS PLAN ACCURATE FOR UTILITY WORK ONLY

CONTRACT CHANGE ORDER NO. 64

SHEET ___ OF ___

UTILITY PLAN

SCALE 1:300

U-3R1

STATE OF CALIFORNIA - DEPARTMENT OF TRANSPORTATION

Caltrans PROJECT DEVELOPMENT

PROJECT ENGINEER T. T. LAI

CALCULATED/DESIGNED BY

CHECKED BY

DATE REVISED

DATE REVISED

LAST REVISION 05-14-10

DATE PLOTTED => 28-JUL-2010

TIME PLOTTED => 15:16

RELATIVE BORDER SCALE IS IN MILLIMETERS 0 20 40 60 80

USERNAME => s113377

DGN FILE => U-3R1.dgn

CU 04251

EA 0120R4

Dist	COUNTY	ROUTE	KILOMETER POST TOTAL PROJECT	SHEET No.	TOTAL SHEETS
04	SF	80	12.6/13.2	26	137

REGISTERED CIVIL ENGINEER DATE

T.T. Lai
No. 63630
9-30-08
CIVIL
REGISTERED PROFESSIONAL ENGINEER
STATE OF CALIFORNIA

PLANS APPROVAL DATE

THE STATE OF CALIFORNIA OR ITS OFFICERS OR AGENTS SHALL NOT BE RESPONSIBLE FOR THE ACCURACY OR COMPLETENESS OF ELECTRONIC COPIES OF THIS PLAN SHEET.

Caltrans Metric

CONTRACT NO. 04-0120R4

CONTRACT CHANGE ORDER NO. 248 S6

SHEET 4 OF 5

REGISTERED PROFESSIONAL ENGINEER
TRINH T. LAI
C 63630
EXP 9/30/10
CIVIL
STATE OF CALIFORNIA

MH- 19
FINISH GRADE
ELEVATION = 9.04

TOP OF VAULT EL=8.43
BOTTOM OF VAULT EL=5.94

Exist 150mm FM
TOP Elev 7.2 M

FG

OG

SEE SHEET UD-1

SEE SHEET UD-3R2

Elev 6.143

Elev 6.000

Elev 5.846

Elev 5.473

Elev 5.321

Elev 5.168

Elev 5.040

Elev 5.000

Elev 6.764

Elev 5.622

g=-1.11

g=7.82

g=15.49

D 3+26.000

D 3+61.544

D 3+55.000

450mm APC, FL=3.4 M

Exist ELECTRICAL CONCRETE DUCT BANK
12.0 KV, 4.1 KV, 2.4 KV
TOP Elev 7.2 M

Exist 300mm VCP, TOP Elev 4.4 M

200mm DIP, FL 6.3 M

CONTRACT CHANGE ORDER NO. 64

SHEET --- OF ---

UTILITY DETAILS
DUCT BANK PROFILE

SCALE HORIZ 1:200
VERT 1:200

UD-2R2

ALL DIMENSIONS ARE IN METERS UNLESS OTHERWISE SHOWN

Station: 60 | 80 | 3+00 | 20 | 40 | 60 | 80 | 4+00

m³ Exc / Emb

STATE OF CALIFORNIA - DEPARTMENT OF TRANSPORTATION
DESIGN
FUNCTIONAL SUPERVISOR: BOB ZANDIPOUR
CALCULATED-DESIGNED BY
CHECKED BY
REVISED BY / DATE REVISED

LAST REVISION DATE PLOTTED => 28-JUL-2010

BORDER LAST REVISED 3/1/2007

RELATIVE BORDER SCALE IS IN MILLIMETERS 0 20 40 60 80

USERNAME => s113377
DGN FILE => UD-2R2.dgn

CU 04251

EA 0120R4

Dist	COUNTY	ROUTE	KILOMETER POST TOTAL PROJECT	SHEET No.	TOTAL SHEETS
04	SF	80	12.6/13.2	27	137

REGISTERED CIVIL ENGINEER DATE

T.T. Lai
63630
Exp. 9-30-08
CIVIL
REGISTERED PROFESSIONAL ENGINEER
STATE OF CALIFORNIA

PLANS APPROVAL DATE

THE STATE OF CALIFORNIA OR ITS OFFICERS OR AGENTS SHALL NOT BE RESPONSIBLE FOR THE ACCURACY OR COMPLETENESS OF ELECTRONIC COPIES OF THIS PLAN SHEET.

REGISTERED PROFESSIONAL ENGINEER
TRINH T. LAI
C 63630
EXP 9/30/10
CIVIL
STATE OF CALIFORNIA

ADVANCE CCO CONTRACT LIMIT
STATION D 4+78

MH-22
TOP OF MANHOLE
ELEVATION= 18.156

SEE SHEET UD-2R2

g=15.49 g=9.56 g=5.06 g=2.61 g=0.00

FG OG

D 3+95.000 Elev 12.185

D 4+33.461 Elev 16.547 D 4+33.461 Elev 16.863
D 4+36.607 Elev 16.540 D 4+36.607 Elev 15.870
Elev 16.719 Elev 16.048
D 4+50.000 Elev 17.246 D 4+50.000 Elev 16.576
Elev 17.528 Elev 16.858
D 4+74.536 Elev 17.887 D 4+74.536 Elev 17.217

CONTRACT NO. 04-0120R4

CONTRACT CHANGE ORDER NO 248 S0

SHEET 5 OF 5

CONTRACT CHANGE ORDER NO. 64

SHEET ___ OF ___

UTILITY DETAILS
DUCT BANK PROFILE

SCALE HORIZ 1:200
VERT. 1:200

UD-3R2

Station 80 4+00 20 40 60 80 5+00

m^3 Exc Emb

STATE OF CALIFORNIA - DEPARTMENT OF TRANSPORTATION
Caltrans
DESIGN
FUNCTIONAL SUPERVISOR: BOB ZANDIPOUR
CALCULATED-DESIGNED BY
CHECKED BY

REVISED BY	DATE REVISED
A	A
A	A

LAST REVISION DATE PLOTTED => 28-JUL-2010
08-14-10 TIME PLOTTED => 14:58

BORDER LAST REVISED 3/1/2007

RELATIVE BORDER SCALE IS IN MILLIMETERS 0 20 40 60 80

USERNAME => s113377
DGN FILE => UD-3R2.dgn

CU 04251

EA 0120R4

STATE OF CALIFORNIA - DEPARTMENT OF TRANSPORTATION

CONTRACT CHANGE ORDER

Change Requested by: Engineer

CCO: 249	Suppl. No. 0	Contract No. 04 - 0120R4	Road SF-80-12.6/13.2	FED. AID LOC.:

To: **CC MYERS INC**

You are directed to make the following changes from the plans and specifications or do the following described work not included in the plans and specifications for this contract. ***NOTE: This change order is not effective until approved by the Engineer.***

Description of work to be done, estimate of quantities and prices to be paid. (Segregate between additional work at contract price, agreed price and force account.) Unless otherwise stated, rates for rental of equipment cover only such time as equipment is actually used and no allowance will be made for idle time. This last percentage shown is the net accumulated increase or decrease from the original quantity in the Engineer's Estimate.

Adjustment of Compensation at Lump Sum:

Eliminate the furnishing and installation of the 210mm DIP water line as shown on Sheet No. 2 and 3 of this change order.

For this work, the Contractor shall credit the Department an agreed lump sum of $510,000.00 which constitutes full and final compensation, including all markups, for all cost savings associated with the elimination of this work.

Cost of Adjustment of Compensation at Agreed Lump Sum.....($510,000.00)

Estimated Cost: **Increase** ☐ **Decrease** ☑ **($510,000.00)**

By reason of this order the time of completion will be adjusted as follows: 0 days

Submitted by

Signature	Resident Engineer	Date
Jeannie Balderramos	JEANNIE BALDERRAMOS	7-21-10

Approval Recommended by

Signature	Area Construction Manager	Date
Deanna Vilcheck	DEANNA VILCHECK	7/22/10

Engineer Approval by

Signature	Area Construction Manager	Date
Deanna Vilcheck	DEANNA VILCHECK	8/17/10

We the undersigned contractor, have given careful consideration to the change proposed and agree, if this proposal is approved, that we will provide all equipment, furnish the materials, except as may otherwise be noted above, and perform all services necessary for the work above specified, and will accept as full payment therefor the prices shown above.

NOTE: If you, the contractor, do not sign acceptance of this order, your attention is directed to the requirements of the specifications as to proceeding with the ordered work and filing a written protest within the time therein specified.

Contractor Acceptance by

Signature	(Print name and title)	Date
D E Himick	**Daniel E. Himick, President**	8-6-2010

DIST	COUNTY	ROUTE	KILOMETER POST TOTAL PROJECT	SHEET NO.	TOTAL SHEETS
04	SF	80	12.6/13.2	20	137

Caltrans Metric

11-27-06
REGISTERED CIVIL ENGINEER

REGISTERED PROFESSIONAL ENGINEER T. T. Lai No. 63630 Exp. 9-30-08 CIVIL STATE OF CALIFORNIA

PLANS APPROVAL DATE

The State of California or its officers or agents shall not be responsible for the accuracy or completeness of electronic copies of this plan sheet.

To get to the Caltrans web site, go to: http://www.dot.ca.gov

DATE REVISED BY DATE REVISED

CALCULATED/ DESIGNED BY

CHECKED BY

PROJECT ENGINEER T. T. LAI

STATE OF CALIFORNIA - DEPARTMENT OF TRANSPORTATION
Caltrans PROJECT DEVELOPMENT

REGISTERED PROFESSIONAL ENGINEER TRINH T. LAI C 63630 EXP 9/30/10 CIVIL STATE OF CALIFORNIA

CONTRACT NO. 04-0120R4

CONTRACT CHANGE ORDER NO 2495C.

SHEET 2 of 3

Connect to Existing Comcast TV.

Install Comcast Line (By Other)

Connect to Existing Water Line

200mm D.I.P.

200 mm VCP

250 mm

100 mm

300 mm

SCA 2B

ESA 1A

ESA 1B

W5

W6

W7

PH-28 Tel Duct

PH-27 Tel Duct

53+00

54+00

52+00

"W" Line

"E" Line

"D" Line

Remove 250 mm Water Line (abd)

Remove Telephone Line (abd)

Remove Electrical Line

Remove 100mm G.I. line (abd)

Remove 150 mm Water Line (abd)

Remove 250mm Water Line (abd)

Remove 100mm G.I. Line (abd)

Electrical Duct Bank

Remove 150mm Water Line (abd)

Remove Electrical Lines

PH-46 Water/Elect

PH-47 Water

150mm Compressed Air

Remove Electrical Line

PH-14 Elect Duct

PH-13 Elect Duct

PH-15 Elect Duct

PH-12 Elect Duct

PH-18 Elect

PH-17 Elect Duct

PH-16 Elect Duct

Remove 50mm Water Line (abd)

SEE DETAIL A ON SHEET U-4

MATCH LINE - SEE SHEET U-3

SOUTH-SOUTH DETOUR

End Installation Water Line Stub-out

Connect to Existing Comcast TV

USCG RD

ALL DIMENSIONS ARE IN METERS UNLESS OTHERWISE SHOWN

FOR NOTES, ABBREVIATIONS &/OR LEGEND, SEE SHEET U-1

THIS PLAN ACCURATE FOR UTILITY WORK ONLY

CONTRACT CHANGE ORDER NO. 64
SHEET ___ OF ___

UTILITY PLAN

SCALE 1:300

U-2

LAST REVISION 11-14-06

PLOTTED => 04-DEC-2006 14:54

DIST	COUNTY	ROUTE	KILOMETER POST TOTAL PROJECT	SHEET No	TOTAL SHEETS
04	SF	80	12.6/13.2	21	137

Caltrans Metric

11-27-06
REGISTERED CIVIL ENGINEER

PLANS APPROVAL DATE

The State of California or its officers or agents shall not be responsible for the accuracy or completeness of electronic copies of this plan sheet.

To get to the Caltrans web site, go to: http://www.dot.ca.gov

REGISTERED PROFESSIONAL ENGINEER T.T. Lai No. 63630 Exp. 9-30-08 CIVIL STATE OF CALIFORNIA

ALL DIMENSIONS ARE IN METERS UNLESS OTHERWISE SHOWN

REGISTERED PROFESSIONAL ENGINEER TRINH T. LAI C 63630 EXP 9/30/10 CIVIL STATE OF CALIFORNIA

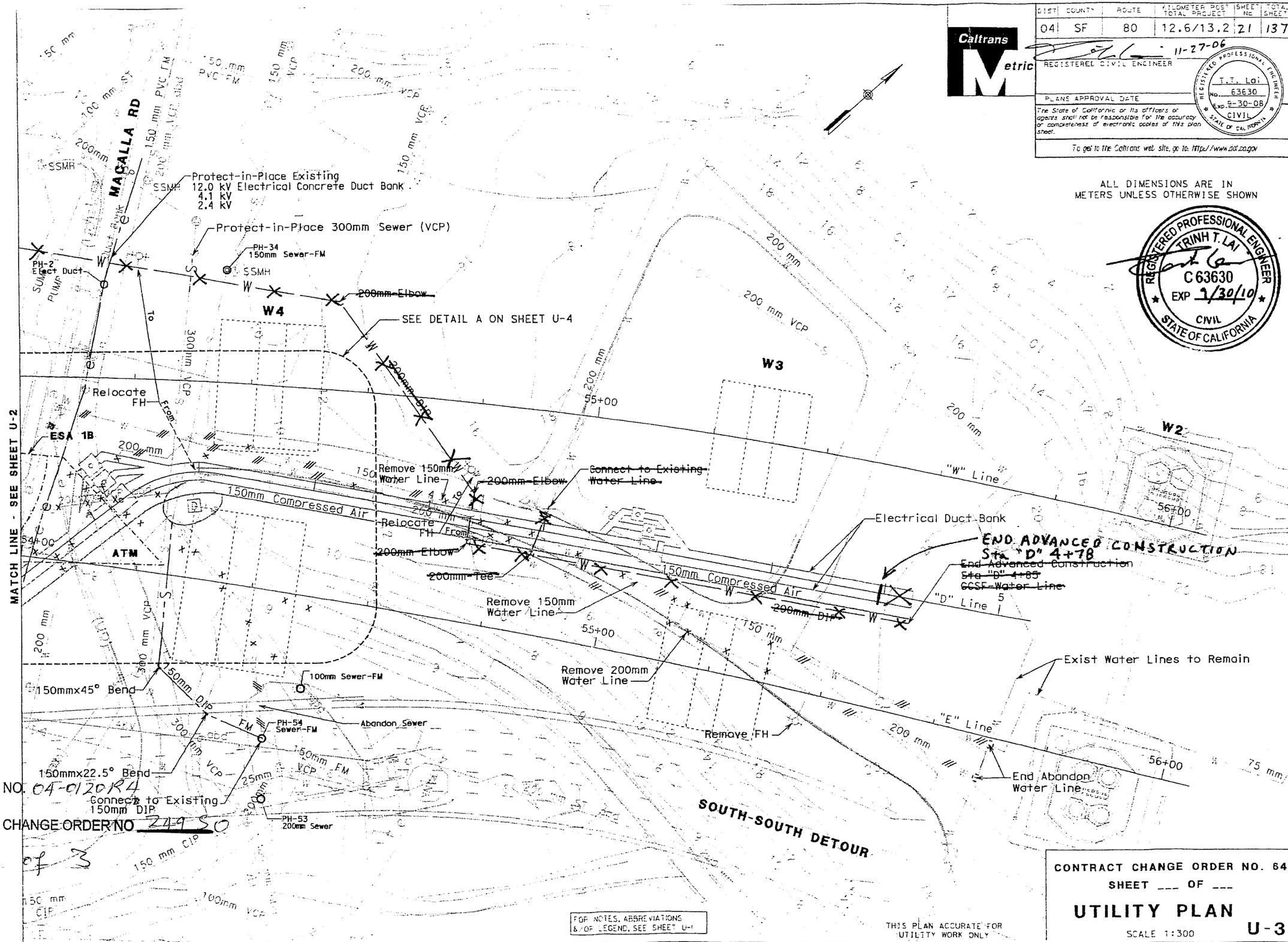

CONTRACT NO. 04-0120R4

CONTRACT CHANGE ORDER NO. 249 SO

SHEET 3 of 3

FOR NOTES, ABBREVIATIONS & / OR LEGEND, SEE SHEET U-1

THIS PLAN ACCURATE FOR UTILITY WORK ONLY

CONTRACT CHANGE ORDER NO. 64

SHEET ___ OF ___

UTILITY PLAN

SCALE 1:300

U-3

STATE OF CALIFORNIA - DEPARTMENT OF TRANSPORTATION

Caltrans PROJECT DEVELOPMENT

PROJECT ENGINEER T. T. LAI

CALCULATED/DESIGNED BY | CHECKED BY | DATE | REVISED BY | DATE REVISED

LAST REVISION 11-14-06 | DATE PLOTTED => 04-DEC-2006 | TIME PLOTTED => 14:57

STATE OF CALIFORNIA - DEPARTMENT OF TRANSPORTATION

CONTRACT CHANGE ORDER

Change Requested by: Engineer

CCO: 250	Suppl. No. 0	Contract No. 04 - 0120R4	Road SF-80-12.6/13.2	FED. AID LOC.:

To: CC MYERS INC

You are directed to make the following changes from the plans and specifications or do the following described work not included in the plans and specifications for this contract. ***NOTE: This change order is not effective until approved by the Engineer.***

Description of work to be done, estimate of quantities and prices to be paid. (Segregate between additional work at contract price, agreed price and force account.) Unless otherwise stated, rates for rental of equipment cover only such time as equipment is actually used and no allowance will be made for idle time. This last percentage shown is the net accumulated increase or decrease from the original quantity in the Engineer's Estimate.

Extra Work at Force Account:

Furnish and install chain link fence (Type 2.4) with extended arm and 3 strands of barb wire to the south and east of Southgate Road and furnish and install a 2.4 meter high wooden fence with swing gate south of Southgate Road as shown on Sheet No. 2 of this change order and as determined by the Engineer.

The Engineer shall layout the exact location of the fence in the field.

Estimated cost of Extra Work at Force Account $180,000.00

Estimated Cost: Increase ☑ Decrease ☐ **$180,000.00**

By reason of this order the time of completion will be adjusted as follows: 0 days

Signature Jeannie Balderrama	**Resident Engineer** JEANNIE BALDERRAMOS	**Date** 4-26-10
Signature Deanna Vilcheck	**Area Construction Manager** DEANNA VILCHECK	**Date** 4/29/10
Signature Deanna Vilcheck	**Area Construction Manager** DEANNA VILCHECK	**Date** 5/19/10

We the undersigned contractor, have given careful consideration to the change proposed and agree, if this proposal is approved, that we will provide all equipment, furnish the materials, except as may otherwise be noted above, and perform all services necessary for the work above specified, and will accept as full payment therefor the prices shown above.

NOTE: If you, the contractor, do not sign acceptance of this order, your attention is directed to the requirements of the specifications as to proceeding with the ordered work and filing a written protest within the time therein specified.

Signature	**(Print name and title)** DANIEL E. Hamick, PRESIDENT	**Date** 5/19/10

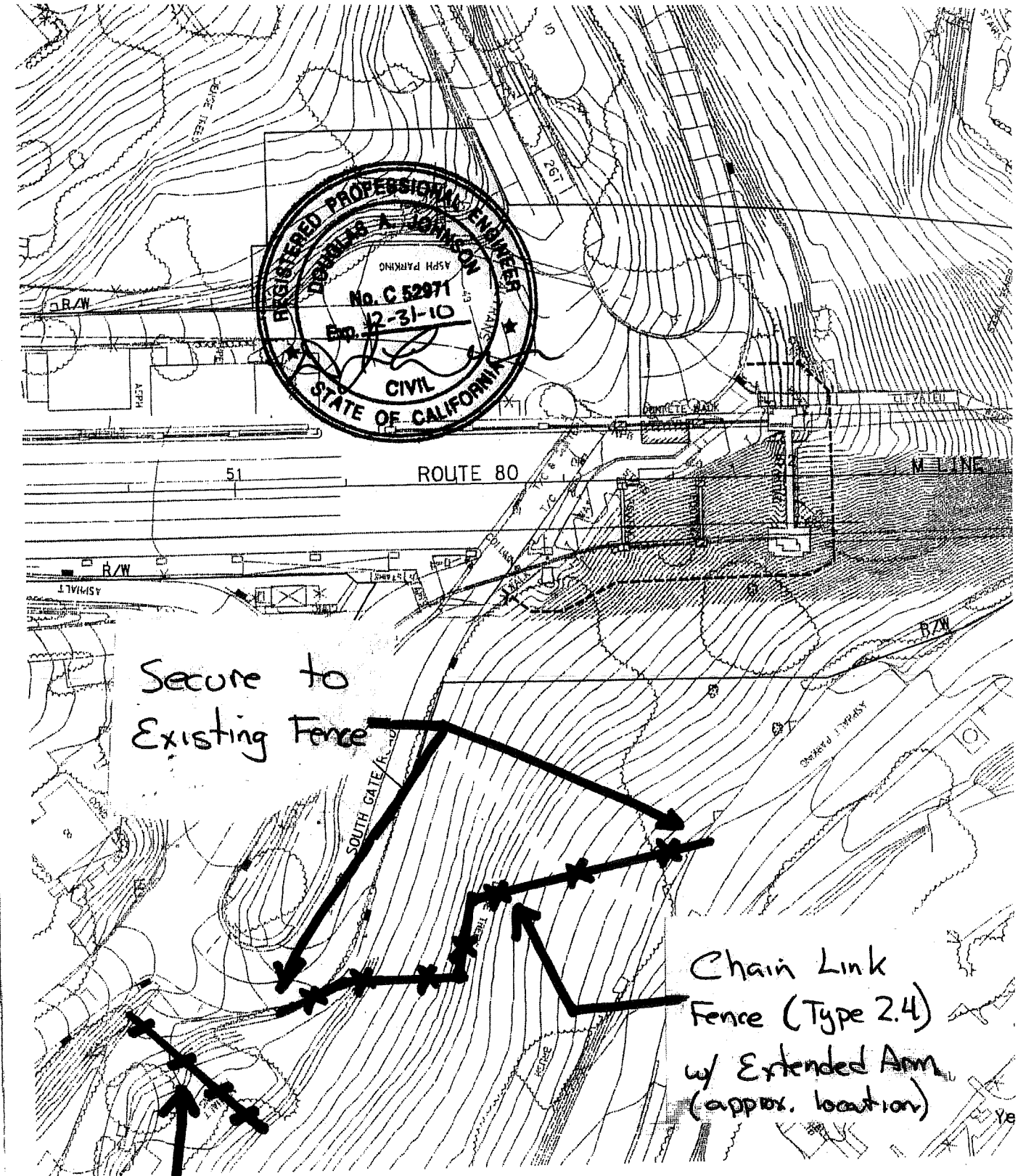

CONTRACT NO. 04-0120P4

CONTRACT CHANGE ORDER NO. 250

SHEET 2 OF 2

STATE OF CALIFORNIA - DEPARTMENT OF TRANSPORTATION

CONTRACT CHANGE ORDER

Change Requested by: Engineer

CCO: 252	Suppl. No. 0	Contract No. 04 - 0120R4	Road SF-80-12.6/13.2	FED. AID LOC.:

To: CC MYERS INC

You are directed to make the following changes from the plans and specifications or do the following described work not included in the plans and specifications for this contract. ***NOTE: This change order is not effective until approved by the Engineer.***

Description of work to be done, estimate of quantities and prices to be paid. (Segregate between additional work at contract price, agreed price and force account.) Unless otherwise stated, rates for rental of equipment cover only such time as equipment is actually used and no allowance will be made for idle time. This last percentage shown is the net accumulated increase or decrease from the original quantity in the Engineer's Estimate.

Extra Work at Lump Sum:

Compensate the Contractor for stoppage and loss of productivity costs incurred by their subcontractor, Silverado Contractors, pertaining to any impacts to the work for the demolition of the existing bridge structure due to United States Coast Guard requested noise restrictions. Work also includes the breaking of existing concrete at corner of abutment footing near the gas line on Southgate road, as directed by the Engineer in the field.

For this work, the Contractor shall be compensated an agreed lump sum of $21,400.00 which constitutes full compensation for all labor, equipment, and material costs, including all markups, for all costs associated with this change.

Extra Work at Agreed Lump Sum $21,400.00

Estimated Cost: Increase ☑ Decrease ☐ **$21,400.00**

By reason of this order the time of completion will be adjusted as follows: 0 days

Submitted by:		
Signature Jeannie Balderrama	**Resident Engineer** JEANNIE BALDERRAMOS	**Date** 6-8-10
Approval Recommended:		
Signature Jeannie Balderrama	**Senior Resident Engineer** JEANNIE BALDERRAMOS	**Date** 6-8-10
Order Approved by:		
Signature Deanna Vilchez	**Senior Resident Engineer** JEANNIE BALDERRAMOS	**Date** 6/28/10

We the undersigned contractor, have given careful consideration to the change proposed and agree, if this proposal is approved, that we will provide all equipment, furnish the materials, except as may otherwise be noted above, and perform all services necessary for the work above specified, and will accept as full payment therefor the prices shown above.

NOTE: If you, the contractor, do not sign acceptance of this order, your attention is directed to the requirements of the specifications as to proceeding with the ordered work and filing a written protest within the time therein specified.

Contractor Accepts and by:		
Signature	**(Print name and title)** Steve Francis, Chief Estimator	**Date** 6-18-10

CONTRACT CHANGE ORDER

Change Requested by: Engineer

CCO: 253	Suppl. No. 0	Contract No. 04 - 0120R4	Road SF-80-12.6/13.2	FED. AID LOC.:

To: **CC MYERS INC**

You are directed to make the following changes from the plans and specifications or do the following described work not included in the plans and specifications for this contract. ***NOTE: This change order is not effective until approved by the Engineer.***

Description of work to be done, estimate of quantities and prices to be paid. (Segregate between additional work at contract price, agreed price and force account.) Unless otherwise stated, rates for rental of equipment cover only such time as equipment is actually used and no allowance will be made for idle time. This last percentage shown is the net accumulated increase or decrease from the original quantity in the Engineer's Estimate.

Extra Work at Lump Sum:

Provide all labor, equipment, and material to remove existing asbestos containing transite pipes encountered between Pier YB1 and Bent 48 of the existing structure that is being demolished. Material will be double bagged or wrapped in two layers of 6-mil polyethylene sheeting and sealed, and placed in a storage location on site for removal by others.

Price includes any required:

1. Additional sampling and testing of material
2. Preparation of a transite removal work plan, and implementing all required measures
3. Preparation of any required engineering calculations and / or drawings for temporary support design and bridge removal plan
4. Air monitoring
5. Sawcut concrete as required to remove pipe
6. Removal and bagging of adjacent concrete encasement that cannot readily be separated from the asbestos containing material
7. Wetting down material for dust control
8. Vacuuming up any transite chards
9. Decontamination of materials, equipment and personnel as required to prevent spreading of contamination to other locations
10. Providing any additional personal protective equipment required for the work.

This price includes compensation for all contractor and subcontractor delays and impacts related to encountering and the removing the asbestos containing transite pipes between Pier YB1 and Bent 48.

Contractor is to use a subcontractor who is fully licensed to perform asbestos removal work.

This work excludes the loading, transportation and disposal of asbestos bearing materials, which will be performed by the Caltrans on-call abatement contractor under separate contract.

For this work, the Contractor shall be compensated an agreed lump sum of $74,040.00 which constitutes full compensation, including all markups, for all costs associated with this change.

Extra Work at Agreed Lump Sum $74,040.00

CONTRACT CHANGE ORDER

Change Requested by: Engineer

CCO: 253	Suppl. No. 0	Contract No. 04 - 0120R4	Road SF-80-12.6/13.2	FED. AID LOC.:

Estimated Cost: Increase ☑ Decrease ☐ **$74,040.00**

By reason of this order the time of completion will be adjusted as follows: 0 days

Submitted by:		
Signature Jeannie Balderramos	**Resident Engineer** JEANNIE BALDERRAMOS	**Date** 6-2-10
Approval Recommended by		
Signature Deanna Vilcheck	**Area Construction Manager** DEANNA VILCHECK	**Date** 6/7/10
Engineer Approval by		
Signature Deanna Vilcheck	**Area Construction Manager** DEANNA VILCHECK	**Date** 6/28/10

We the undersigned contractor, have given careful consideration to the change proposed and agree, if this proposal is approved, that we will provide all equipment, furnish the materials, except as may otherwise be noted above, and perform all services necessary for the work above specified, and will accept as full payment therefor the prices shown above.

NOTE: If you, the contractor, do not sign acceptance of this order, your attention is directed to the requirements of the specifications as to proceeding with the ordered work and filing a written protest within the time therein specified.

Contractor Accepts by:		
Signature	**(Print name and title)** Steve Francis, Chief Estimator	**Date** 6.18.10

CONTRACT CHANGE ORDER

Change Requested by: Engineer

CCO: 254	Suppl. No. 0	Contract No. 04 - 0120R4	Road SF-80-12.6/13.2	FED. AID LOC.:

To: CC MYERS INC

You are directed to make the following changes from the plans and specifications or do the following described work not included in the plans and specifications for this contract. ***NOTE: This change order is not effective until approved by the Engineer.***

Description of work to be done, estimate of quantities and prices to be paid. (Segregate between additional work at contract price, agreed price and force account.) Unless otherwise stated, rates for rental of equipment cover only such time as equipment is actually used and no allowance will be made for idle time. This last percentage shown is the net accumulated increase or decrease from the original quantity in the Engineer's Estimate.

Extra Work at Lump Sum:

Provide all labor, equipment, and material to remove existing cardboard and associated material encountered between Pier YB1 and Bent 48 of the existing structure that is being demolished. The work includes the loading, transportation and disposal of material at an offsite facility.

The work includes:
1. Sampling and testing of material.
2. Breaking cardboard away from concrete, including any labor and equipment required to remove and segregate from other materials.
3. Providing personal protective equipment required for the work.

For this work, the Contractor shall be compensated an agreed lump sum of $20,460.00 which constitutes full compensation, including all markups, for all costs associated with this change, including any delays and impacts related to encountering and the removing this material between Pier YB1 and Bent 48.

Extra Work at Agreed Lump Sum $20,460.00

Estimated Cost: Increase ☑ Decrease ☐ **$20,460.00**

By reason of this order the time of completion will be adjusted as follows: 0 days

Submitted by		
Signature Jeannie Balderrama	**Resident Engineer** JEANNIE BALDERRAMOS	**Date** 6-8-10
Approval Recommended by		
Signature Jeannie Balderrama	**Senior Resident Engineer** JEANNIE BALDERRAMOS	**Date** 6-8-10
Engineer Approval by		
Signature Jeannie Balderrama	**Senior Resident Engineer** JEANNIE BALDERRAMOS	**Date** 7-1-10

We the undersigned contractor, have given careful consideration to the change proposed and agree, if this proposal is approved, that we will provide all equipment, furnish the materials, except as may otherwise be noted above, and perform all services necessary for the work above specified, and will accept as full payment therefor the prices shown above.

NOTE: If you, the contractor, do not sign acceptance of this order, your attention is directed to the requirements of the specifications as to proceeding with the ordered work and filing a written protest within the time therein specified.

Contractor Acceptance by		
Signature	**(Print name and title)** **Steve Francis, Chief Estimator**	**Date** 6-18-10

CONTRACT CHANGE ORDER

Change Requested by: Engineer

CCO: 255	Suppl. No. 0	Contract No. 04 - 0120R4	Road SF-80-12.6/13.2	FED. AID LOC.:

To: **CC MYERS INC**

You are directed to make the following changes from the plans and specifications or do the following described work not included in the plans and specifications for this contract. ***NOTE: This change order is not effective until approved by the Engineer.***

Description of work to be done, estimate of quantities and prices to be paid. (Segregate between additional work at contract price, agreed price and force account.) Unless otherwise stated, rates for rental of equipment cover only such time as equipment is actually used and no allowance will be made for idle time. This last percentage shown is the net accumulated increase or decrease from the original quantity in the Engineer's Estimate.

Extra Work at Force Account:

As determined necessary by the Engineer, clean and coat all reinforcing bars for the columns pertaining to the Yerba Buena Island Transition Structure (Bridge No. 34-0006 L/R) that are designated to remain exposed at the end of the current contract.

Cleaning shall be by wire brushing or abrasive blast cleaning to remove all dirt, loose rust, salt contamination and residue on the metal surfaces. Immediately after cleaning, the surfaces shall be covered with one application of unthinned zinc-rich primer (organic vehicle type) conforming to the provisions in Section 91 of the Standard Specifications, "Paint," except that 2 applications shall be applied where determined necessary by the Engineer. The primer shall be submitted to and approved by the Engineer prior to use. Aerosol cans shall not be used. The paint shall be thoroughly mixed at the time of application.

This work will be paid for in accordance with Section 5-1.24 "Force Account Payment" of the Special Provisions, and Section 4-1.03D "Extra Work" of the Standard Specifications.

Estimated cost of Extra Work at Force Account $180,000.00

Estimated Cost: Increase ☑ Decrease ☐ **$180,000.00**

By reason of this order the time of completion will be adjusted as follows: 0 days

Submitted by

Signature	Resident Engineer JEANNIE BALDERRAMOS	Date 6/25/10

Approval Recommended by

Signature	Area Construction Manager DEANNA VILCHECK	Date 6/25/10

Engineer Approval by

Signature	Area Construction Manager DEANNA VILCHECK	Date 7/14/10

We the undersigned contractor, have given careful consideration to the change proposed and agree, if this proposal is approved, that we will provide all equipment, furnish the materials, except as may otherwise be noted above, and perform all services necessary for the work above specified, and will accept as full payment therefor the prices shown above.

NOTE: If you, the contractor, do not sign acceptance of this order, your attention is directed to the requirements of the specifications as to proceeding with the ordered work and filing a written protest within the time therein specified.

Contractor Accepted by

Signature	(Print name and title) Daniel E. Himick, President	Date 7-6-2010

STATE OF CALIFORNIA - DEPARTMENT OF TRANSPORTATION

CONTRACT CHANGE ORDER

Change Requested by: Engineer

CCO: 255	Suppl. No. 1	Contract No. 04 - 0120R4	Road SF-80-12.6/13.2	FED. AID LOC.:

To: **CC MYERS INC**

You are directed to make the following changes from the plans and specifications or do the following described work not included in the plans and specifications for this contract. ***NOTE: This change order is not effective until approved by the Engineer.***

Description of work to be done, estimate of quantities and prices to be paid. (Segregate between additional work at contract price, agreed price and force account.) Unless otherwise stated, rates for rental of equipment cover only such time as equipment is actually used and no allowance will be made for idle time. This last percentage shown is the net accumulated increase or decrease from the original quantity in the Engineer's Estimate.

Extra Work at Force Account:

Provide additional funds for the work specified under the original Change Order No. 255

Estimated cost of Extra Work at Force Account $100,000.00

Estimated Cost: **Increase** ☑ **Decrease** ☐ **$100,000.00**

By reason of this order the time of completion will be adjusted as follows: 0 days

Submitted by		
Signature Jeannie Balderramos	**Resident Engineer** JEANNIE BALDERRAMOS	**Date** 8-3-10
Approval Recommended by		
Signature Deanna Vilcheck	**Area Construction Manager** DEANNA VILCHECK	**Date** 8/4/10
Engineer Approval by		
Signature Deanna Vilcheck	**Area Construction Manager** DEANNA VILCHECK	**Date** 8/9/10

We the undersigned contractor, have given careful consideration to the change proposed and agree, if this proposal is approved, that we will provide all equipment, furnish the materials, except as may otherwise be noted above, and perform all services necessary for the work above specified, and will accept as full payment therefor the prices shown above.

NOTE: If you, the contractor, do not sign acceptance of this order, your attention is directed to the requirements of the specifications as to proceeding with the ordered work and filing a written protest within the time therein specified.

Contractor Acceptance by		
Signature NOT REQUIRED.	**(Print name and title)**	**Date**

STATE OF CALIFORNIA - DEPARTMENT OF TRANSPORTATION

CONTRACT CHANGE ORDER

Change Requested by: Engineer

CCO: 255	Suppl. No. 2	Contract No. 04 - 0120R4	Road SF-80-12.6/13.2	FED. AID LOC.:

To: **CC MYERS INC**

You are directed to make the following changes from the plans and specifications or do the following described work not included in the plans and specifications for this contract. ***NOTE: This change order is not effective until approved by the Engineer.***

Description of work to be done, estimate of quantities and prices to be paid. (Segregate between additional work at contract price, agreed price and force account.) Unless otherwise stated, rates for rental of equipment cover only such time as equipment is actually used and no allowance will be made for idle time. This last percentage shown is the net accumulated increase or decrease from the original quantity in the Engineer's Estimate.

Extra Work at Force Account:

Provide additional funds for the work specified under the original Change Order No. 255

Estimated cost of Extra Work at Force Account $50,000.00

Estimated Cost: **Increase** ☑ **Decrease** ☐ **$50,000.00**

By reason of this order the time of completion will be adjusted as follows: 0 days

Submitted by

Signature	Resident Engineer	Date
Jeannette J Balderrama	JEANNIE BALDERRAMOS	2-9-11

Approval Recommended by

Signature	Area Construction Manager	Date
Deanna Vilcheck	DEANNA VILCHECK	2/9/11

Engineer Approval by

Signature	Area Construction Manager	Date
Deanna Vilcheck	DEANNA VILCHECK	2/14/11

We the undersigned contractor, have given careful consideration to the change proposed and agree, if this proposal is approved, that we will provide all equipment, furnish the materials, except as may otherwise be noted above, and perform all services necessary for the work above specified, and will accept as full payment therefor the prices shown above.

NOTE: If you, the contractor, do not sign acceptance of this order, your attention is directed to the requirements of the specifications as to proceeding with the ordered work and filing a written protest within the time therein specified.

Contractor Acceptance by

Signature	(Print name and title)	Date
NOT REQUIRED		

CONTRACT CHANGE ORDER

Change Requested by: Engineer

CCO: 256	Suppl. No. 0	Contract No. 04 - 0120R4	Road SF-80-12.6/13.2	FED. AID LOC.:

To: **CC MYERS INC**

You are directed to make the following changes from the plans and specifications or do the following described work not included in the plans and specifications for this contract. ***NOTE: This change order is not effective until approved by the Engineer.***

Description of work to be done, estimate of quantities and prices to be paid. (Segregate between additional work at contract price, agreed price and force account.) Unless otherwise stated, rates for rental of equipment cover only such time as equipment is actually used and no allowance will be made for idle time. This last percentage shown is the net accumulated increase or decrease from the original quantity in the Engineer's Estimate.

The Contractor shall reference and incorporate into the Contract the Department's new National Pollutant Discharge Elimination System (NPDES) General Permit for Storm Water Discharges Associated with Construction and Land Disturbance (Order No. 2009-009-DWQ), Construction General Permit effective July 1, 2010.

The Department's permit references and incorporates by reference the current statewide general permit issued by the SWRCB titled "Order No. 2009-0009-DWQ, National Pollutant Discharge Elimination System (NPDES) General Permit No. CAS000002, Waste Discharge Requirements for Discharges of Storm Water Runoff Associated with Construction and Land Disturbance Activities" that regulates discharges of stormwater and non-stormwater from construction activities disturbing one or more acres of soil in a common plan of development. Copies of the statewide permit and its modifications are available for review from the SWRCB, Division of Water Quality, 1001 "I" Street, P.O. Box 100, Sacramento, California 95812-0100, Telephone fax: (916) 341-5463 and may also be obtained at:

http://www.waterboards.ca.gov/water_issues/programs/stormwater/

Said document shall be considered a part of, and shall become, an integral part of the special provisions and contract for this project.

The requirements of this permit shall supersede the Department's permit referenced under Section 10-1.02 "WATER POLLUTION CONTROL" of the Contract Special Provisions entitled: "Order No. 99-06-DWQ, NPDES No. CAS000003, National Pollutant Discharge Elimination System Permit, Storm Water Permit and Waste Discharge Requirements for the State of California, Department of Transportation Properties. Facilities, and Activities". The requirements of this new permit shall govern over all relevant aspects of the Contract.

This Contract shall comply to the requirements pertaining to Risk Level 2 as defined under the permit.

Any additional costs resulting from this change order shall be compensated under Change order No. 119.

CONTRACT CHANGE ORDER

Change Requested by: Engineer

CCO: 256	Suppl. No. 0	Contract No. 04 - 0120R4	Road SF-80-12.6/13.2	FED. AID LOC.:

Estimated Cost: Increase ☐ Decrease ☐ $0.00

By reason of this order the time of completion will be adjusted as follows: 0 days

Submitted by		
Signature Jeannie Balderramos	Resident Engineer JEANNIE BALDERRAMOS	Date 6/29/10
Approval Recommended by		
Signature Deanna Vilcheck	Area Construction Manager DEANNA VILCHECK	Date 6/29/10
Engineer Approval by		
Signature Deanna Vilcheck	Area Construction Manager DEANNA VILCHECK	Date 6/30/10

We the undersigned contractor, have given careful consideration to the change proposed and agree, if this proposal is approved, that we will provide all equipment, furnish the materials, except as may otherwise be noted above, and perform all services necessary for the work above specified, and will accept as full payment therefor the prices shown above.

NOTE: If you, the contractor, do not sign acceptance of this order, your attention is directed to the requirements of the specifications as to proceeding with the ordered work and filing a written protest within the time therein specified.

Contractor Acceptance by		
Signature UNILATERAL	(Print name and title)	Date

STATE OF CALIFORNIA - DEPARTMENT OF TRANSPORTATION

CONTRACT CHANGE ORDER

Change Requested by: Engineer

CCO: 257	Suppl. No. 0	Contract No. 04 - 0120R4	Road SF-80-12.6/13.2	FED. AID LOC.:

To: CC MYERS INC

You are directed to make the following changes from the plans and specifications or do the following described work not included in the plans and specifications for this contract. ***NOTE: This change order is not effective until approved by the Engineer.***

Description of work to be done, estimate of quantities and prices to be paid. (Segregate between additional work at contract price, agreed price and force account.) Unless otherwise stated, rates for rental of equipment cover only such time as equipment is actually used and no allowance will be made for idle time. This last percentage shown is the net accumulated increase or decrease from the original quantity in the Engineer's Estimate.

Adjustment of Compensation at Lump Sum:

Eliminate the installation of the last 7 meters of the electrical duct bank and 150mm compressed air line that was called for on Sheet No. 168 of Change Order No. 73. The end of the advance construction is revised to Station "D" 4+78. The end treatments specified for the duct bank and compressed air line will be applied at this revised end point.

All conduit, reinforcing steel and associated appurtenances required for the future construction of the 7 meters of duct bank and compressed air line (eliminated under this change order) shall be furnished to the Department and stored on the project site for future use on a subsequent contract.

Eliminate the removal of the portion of the soil nail wall that conflicted with the construction of the portion of the duct bank and compressed air line that has been eliminated under this change order. This work was provided for under Change Order No. 237 but the eliminated work shall be credited under this change order.

Eliminate the placement of stone bedding for the compressed air line being eliminated under this change order. This work was provided for under Change Order No. 232 but the eliminated work shall be credited under this change order.

For the changes specified under this change order, the Contractor shall credit the Department an agreed lump sum of $49,520.00 which constitutes full and final compensation, including all markups, for all cost savings associated with the elimination of this work. No additional costs shall be paid for furnishing and storing the materials for future use as specified.

Cost of Adjustment of Compensation at Lump Sum .....($49,520.00)

Estimated Cost: **Increase** ☐ **Decrease** ☑ **($49,520.00)**

By reason of this order the time of completion will be adjusted as follows: 0 days

Submitted by

Signature	Resident Engineer	Date
Jeannie Balderrama	JEANNIE BALDERRAMOS	9/2/10

Approval Recommended by

Signature	Senior Resident Engineer	Date
Jeannie Balderrama	JEANNIE BALDERRAMOS	9/2/10

Engineer Approval by

Signature	Area Construction Manager	Date
Deanna Vilcheck	DEANNA VILCHECK	10/6/10

We the undersigned contractor, have given careful consideration to the change proposed and agree, if this proposal is approved, that we will provide all equipment, furnish the materials, except as may otherwise be noted above, and perform all services necessary for the work above specified, and will accept as full payment therefor the prices shown above.

NOTE: If you, the contractor, do not sign acceptance of this order, your attention is directed to the requirements of the specifications as to proceeding with the ordered work and filing a written protest within the time therein specified.

Contractor Acceptance by

Signature	(Print name and title)	Date
	Steve Francis, Chief Estimator	10-1-10

STATE OF CALIFORNIA - DEPARTMENT OF TRANSPORTATION

CONTRACT CHANGE ORDER

Change Requested by: Engineer

CCO: 258	Suppl. No. 0	Contract No. 04 - 0120R4	Road SF-80-12.6/13.2	FED. AID LOC.:

To: **CC MYERS INC**

You are directed to make the following changes from the plans and specifications or do the following described work not included in the plans and specifications for this contract. ***NOTE: This change order is not effective until approved by the Engineer.***

Description of work to be done, estimate of quantities and prices to be paid. (Segregate between additional work at contract price, agreed price and force account.) Unless otherwise stated, rates for rental of equipment cover only such time as equipment is actually used and no allowance will be made for idle time. This last percentage shown is the net accumulated increase or decrease from the original quantity in the Engineer's Estimate.

Provide for the following changes concerning Drainage System No. 1 from Bent W7 of the Yerba Buena Island Transition Structure (Br. No. 34-0006L/R):

1)Construct a reinforced concrete collar at the vertical curve for the 450mm APC (Drainage Unit h) as shown on Page No. 2 of this change order.

2)Modify the drainage system from Bent W7 of the Yerba Buena Island Transition Structure (Br. No. 34-0006L/R) as shown on Pages No. 3 through 4 of this change order.

Adjustment of Compensation at Lump Sum:

Provide compensation to the Contractor for all additional costs incurred due to the modifications to the drainage system at Bent W7 incorporated under this change order. For this work, the Contractor shall be compensated an agreed lump sum of $55,970.00 which constitutes full and final compensation, including all markups, for all additional costs incurred.

Compensation provided under this change order includes all outstanding costs associated with all delays and added work incurred during the construction of Drainage System No. 1 from Bent W7 and Drainage System No. 1 and No. 5 from the Bent W6 due to the changes incorporated under this change and due to any conflicts or unanticipated obstructions encountered during the installation of these systems.

Cost of Adjustment of Compensation at Lump Sum $55,970.00

Estimated Cost: **Increase** ☑ **Decrease** ☐ **$55,970.00**

By reason of this order the time of completion will be adjusted as follows: 0 days

Submitted by		
Signature Jeannie Balderramos	**Resident Engineer** JEANNIE BALDERRAMOS	**Date** 10-8-10
Approval Recommended by		
Signature Deanna Vilcheck	**Area Construction Manager** DEANNA VILCHECK	**Date** 10/11/10
Engineer Approval by		
Signature Deanna Vilcheck	**Area Construction Manager** DEANNA VILCHECK	**Date** 10/25/10

We the undersigned contractor, have given careful consideration to the change proposed and agree, if this proposal is approved, that we will provide all equipment, furnish the materials, except as may otherwise be noted above, and perform all services necessary for the work above specified, and will accept as full payment therefor the prices shown above.

NOTE: If you, the contractor, do not sign acceptance of this order, your attention is directed to the requirements of the specifications as to proceeding with the ordered work and filing a written protest within the time therein specified.

Contractor Acceptance by		
Signature	**(Print name and title)** Steve Francis, Vice President	**Date** 10/22/10

WT Drainage – Vertical Curve @ pipe 'h'

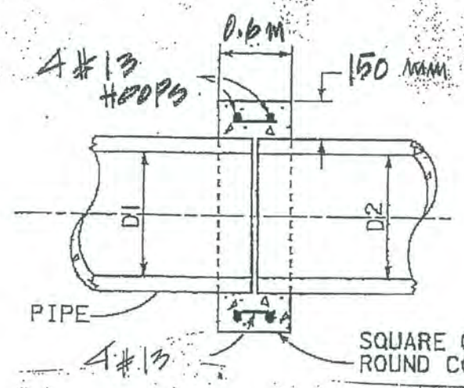

PIPE ENCASEMENT - DRAINAGE ITEM "h"

1-18-09

REGISTERED PROFESSIONAL ENGINEER
DOUGLAS A. JOHNSON
No. C 52971
Exp. 12-31-10
CIVIL
STATE OF CALIFORNIA

CONTRACT NO. 04-0120R4

CONTRACT CHANGE ORDER NO 258 So.

SHEET 2 OF 4

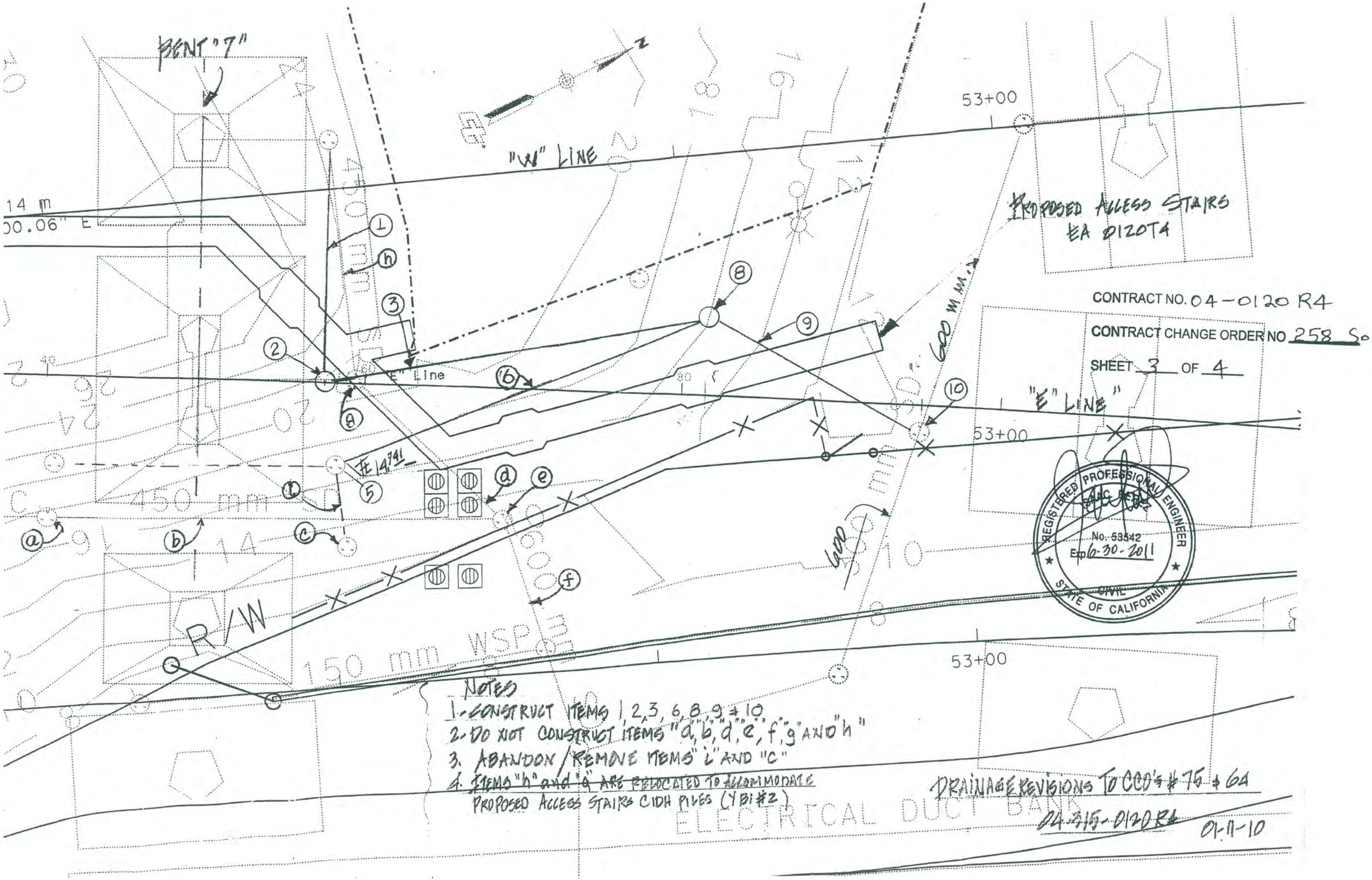
BENT "7"
"W" LINE
53+00
PROPOSED ACCESS STAIRS
EA 0120T4
CONTRACT NO. 04-0120 R4
CONTRACT CHANGE ORDER NO 258 So
SHEET 3 OF 4
"E" LINE
"E" Line
600 mm
R/W
150 mm WSP
450 mm
ELECTRICAL DUCT BANK
REGISTERED PROFESSIONAL ENGINEER
No. 53542
Exp 6-30-2011
CIVIL
STATE OF CALIFORNIA
NOTES
1- CONSTRUCT ITEMS 1, 2, 3, 6, 8, 9 & 10
2- DO NOT CONSTRUCT ITEMS "a", "b", "d", "e", "f", "g" AND "h"
3. ABANDON / REMOVE ITEMS "i" AND "c"
4. ~~ITEMS "h" and "g" ARE RELOCATED TO ACCOMMODATE~~
PROPOSED ACCESS STAIRS CIDH PILES (YBI #2)
DRAINAGE REVISIONS TO CCO's # 75 & 64
04-315-0120 R4
01-11-10

CONTRACT NO. 04-0120R4

CONTRACT CHANGE ORDER NO 258 So.

SHEET 4 OF 4

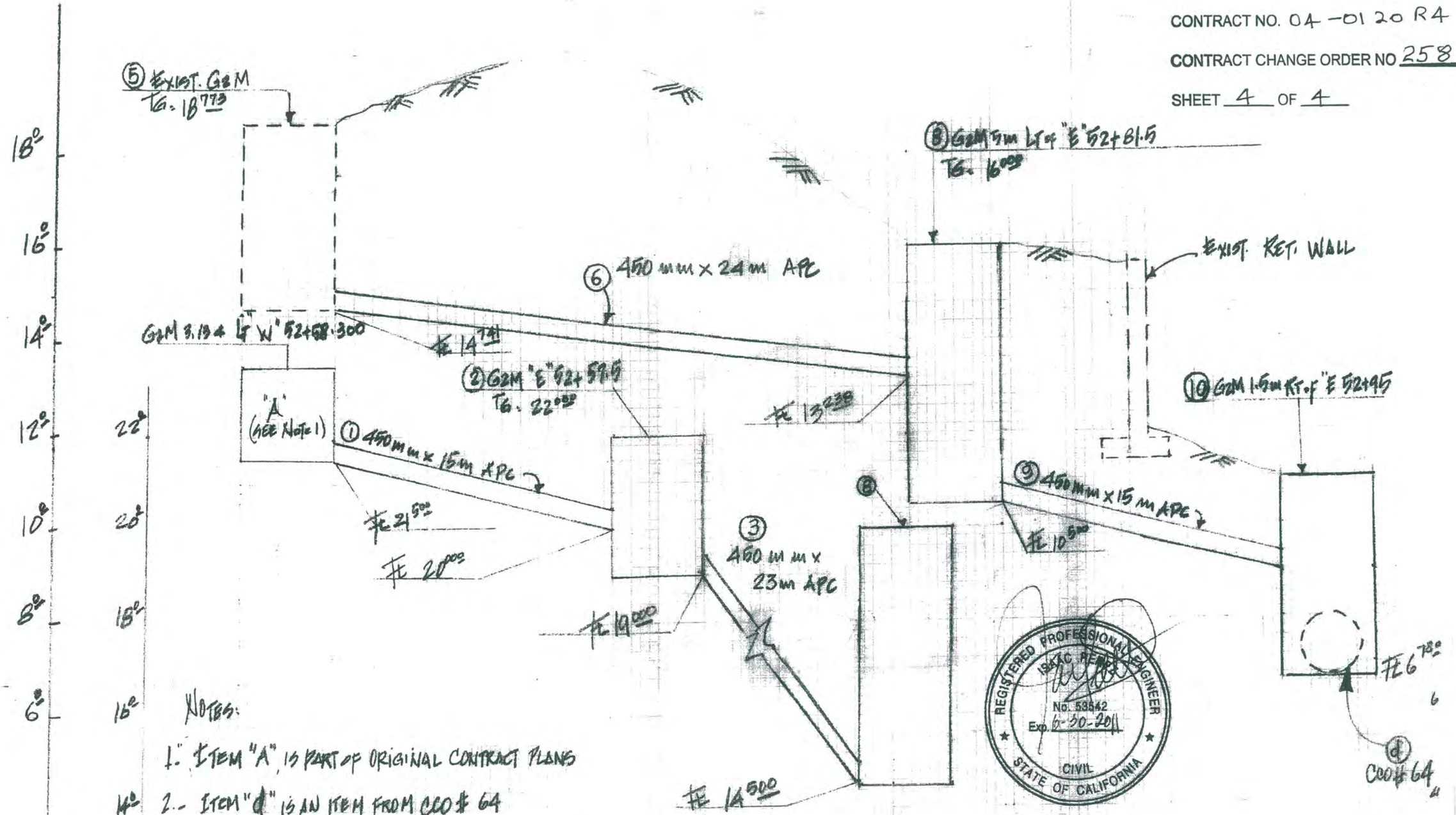

NOTES:

1.- ITEM "A", IS PART OF ORIGINAL CONTRACT PLANS

2.- ITEM "④" IS AN ITEM FROM CCO # 64

REGISTERED PROFESSIONAL ENGINEER
ISAAC REYES
No. 53542
Exp. 6-30-2011
CIVIL
STATE OF CALIFORNIA

DRAINAGE REVISIONS TO CCO. # 75 & 64

04-315-0120R4 01-11-10

STATE OF CALIFORNIA - DEPARTMENT OF TRANSPORTATION

CONTRACT CHANGE ORDER

Change Requested by: Engineer

CCO: 259	Suppl. No. 0	Contract No. 04 - 0120R4	Road SF-80-12.6/13.2	FED. AID LOC.:

To: CC MYERS INC

You are directed to make the following changes from the plans and specifications or do the following described work not included in the plans and specifications for this contract. ***NOTE: This change order is not effective until approved by the Engineer.***

Description of work to be done, estimate of quantities and prices to be paid. (Segregate between additional work at contract price, agreed price and force account.) Unless otherwise stated, rates for rental of equipment cover only such time as equipment is actually used and no allowance will be made for idle time. This last percentage shown is the net accumulated increase or decrease from the original quantity in the Engineer's Estimate.

Extra Work at Lump Sum:

In accordance with Section 8-1.05, "Temporary Suspension of Work" of the Standard Specifications, provide compensation to the Contractor for the following jobsite maintenance work which was necessary due to the temporary suspension of work ordered by the Engineer from September 3, 2004 through April 16, 2006:

1) Remove rust from all column forms from June 8, through June 27, 2005.
2) Regrade Bent 49 footings due to erosion from June 3 through June 7, 2005.
3) Clear weeds and overgrowth throughout the jobsite from April 14 through June 1, 2005.

For this work, the Contractor shall be compensated an agreed lump sum of $8,610.00 which constitutes full and final compensation, including all markups, for all additional costs incurred.

Extra Work at agreed Lump Sum $8,610.00

Estimated Cost: Increase ☑ Decrease ☐ **$8,610.00**

By reason of this order the time of completion will be adjusted as follows: 0 days

Submitted by		
Signature Jeannie Baldrn	**Resident Engineer** JEANNIE BALDERRAMOS	**Date** 7-23-10
Approval Recommended by		
Signature Jeannie Baldrn	**Senior Resident Engineer** JEANNIE BALDERRAMOS	**Date** 7-23-10
Engineer Approval by		
Signature Deanna Vilcheck	**Area Construction Manager** DEANNA VILCHECK	**Date** 8/17/10

We the undersigned contractor, have given careful consideration to the change proposed and agree, if this proposal is approved, that we will provide all equipment, furnish the materials, except as may otherwise be noted above, and perform all services necessary for the work above specified, and will accept as full payment therefor the prices shown above.

NOTE: If you, the contractor, do not sign acceptance of this order, your attention is directed to the requirements of the specifications as to proceeding with the ordered work and filing a written protest within the time therein specified.

Contractor Acceptance by		
Signature	**(Print name and title)** **Steve Francis, Chief Estimator**	**Date** 8.6.10

STATE OF CALIFORNIA - DEPARTMENT OF TRANSPORTATION

CONTRACT CHANGE ORDER

Change Requested by: Contractor

CCO: 260	Suppl. No. 0	Contract No. 04- 0120R4	Road SF-80-12.6/13.2	FED. AID LOC.:

To: CC MYERS INC

You are directed to meke the following changes from the plans and specifications or do the following described work not included in the plans and specifications for this contract. ***NOTE: This change order is not effective until approved by the Engineer.***

Description of work to be done, estimate of quantities and prices to be paid. (Segregate between additional work at contract price, agreed price and force account.) Unless otherwise stated, rates for rental of equipment cover only such time as equipment is actually used and no allowance will be made for idle time. This last percentage shown is the net accumulated increase or decrease from the original quantity in the Engineer's Estimate.

Adjustment of Compensation at Lump Sum:

In accordance with Section 10-1.20 "Time Related Overhead" of the Contract Special Provisions, the payments for time-related overhead in excess of 149 percent of the lump sum price bid under Contract Bid Item No. 8 "Time-Related Overhead" shall be adjusted to reflect the actual time-related overhead costs incurred.

In addition to the compensation provided for time-related overhead under Contract Bid Item No. 8, Change Order No. 24, Change Order No. 24, Supplement No. 2, Change Order No. 91, Change Order No. 91, Supplement No. 1, Change Order No. 91, Supplement No. 2, and Change Order No. 239, the Contractor shall be compensated an agreed lump sum of $5,801,300.00 for all outstanding time-related over head costs incurred. This lump sum constitutes full compensation, including all markups, for all outstanding costs associated with the Contractor's time-related overhead including all subcontractors, suppliers or other parties associated with the Contractor.

Cost of Adjustment of Compensation at Lump Sum $5,801,300.00

Estimated Cost: Increase ☑ Decrease ☐ **$5,801,300.00**

By reason of this order the time of completion will be adjusted as follows: 0 days

Submitted by

Signature	Resident Engineer	Date
Jeannie Balderrama	JEANNIE BALDERRAMOS	2/25/11

Approval Recommended by

Signature	SFOBB Construction Manager	Date
Mike Forner	MIKE FORNER	2/25/2011

Engineer Approval by

Signature	SFOBB Construction Manager	Date
	MIKE FORNER	

We the undersigned contractor, have given careful consideration to the change proposed and agree, if this proposal is approved, that we will provide all equipment, furnish the materials, except as may otherwise be noted above, and perform all services necessary for the work above specified, and will accept as full payment therefor the prices shown above.

NOTE: If you, the contractor, do not sign acceptance of this order, your attention is directed to the requirements of the specifications as to proceeding with the ordered work and filing a written protest within the time therein specified.

Contractor Acceptance by

Signature	(Print name and title)	Date
	DANIEL E. Himick President	2/4/11

STATE OF CALIFORNIA - DEPARTMENT OF TRANSPORTATION

CONTRACT CHANGE ORDER

Change Requested by: Engineer

CCO: 261	Suppl. No. 0	Contract No. 04 - 0120R4	Road SF-80-12.6/13.2	FED. AID LOC.:

To: **CC MYERS INC**

You are directed to make the following changes from the plans and specifications or do the following described work not included in the plans and specifications for this contract. ***NOTE: This change order is not effective until approved by the Engineer.***

Description of work to be done, estimate of quantities and prices to be paid. (Segregate between additional work at contract price, agreed price and force account.) Unless otherwise stated, rates for rental of equipment cover only such time as equipment is actually used and no allowance will be made for idle time. This last percentage shown is the net accumulated increase or decrease from the original quantity in the Engineer's Estimate.

Extra Work at Lump Sum:

Provide compensation to the Contractor for all outstanding costs incurred in association with welding quality control and inspection pertaining to the erection of the steel truss and skid bents of the East Tie-In (ETI) portion of the Temporary Bypass Structure (Bridge No. 34-0006 (TEMP)).

For this work, the Contractor shall be compensated an agreed lump sum of $189,140.00 which constitutes full and final compensation, including all markups, for all outstanding costs incurred.

Extra Work at Agreed Lump Sum $189,140.00

Estimated Cost: Increase ☑ Decrease ☐ **$189,140.00**

By reason of this order the time of completion will be adjusted as follows: 0 days

Submitted by		
Signature Jeannie Balderramos	**Resident Engineer** JEANNIE BALDERRAMOS	**Date** 8-3-10
Approval Recommended by		
Signature Deanna Vilcheck	**Area Construction Manager** DEANNA VILCHECK	**Date** 8/4/10
Engineer Approval by		
Signature Deanna Vilcheck	**Area Construction Manager** DEANNA VILCHECK	**Date** 8/18/10

We the undersigned contractor, have given careful consideration to the change proposed and agree, if this proposal is approved, that we will provide all equipment, furnish the materials, except as may otherwise be noted above, and perform all services necessary for the work above specified, and will accept as full payment therefor the prices shown above.

NOTE: If you, the contractor, do not sign acceptance of this order, your attention is directed to the requirements of the specifications as to proceeding with the ordered work and filing a written protest within the time therein specified.

Contractor Acceptance by		
Signature	**(Print name and title)** **Daniel E. Himick, President**	**Date** 8-13-10

STATE OF CALIFORNIA - DEPARTMENT OF TRANSPORTATION

CONTRACT CHANGE ORDER

Change Requested by: Engineer

CCO: 262	Suppl. No. 0	Contract No. 04 - 0120R4	Road SF-80-12.6/13.2	FED. AID LOC.:

To: CC MYERS INC

You are directed to make the following changes from the plans and specifications or do the following described work not included in the plans and specifications for this contract. ***NOTE: This change order is not effective until approved by the Engineer.***

Description of work to be done, estimate of quantities and prices to be paid. (Segregate between additional work at contract price, agreed price and force account.) Unless otherwise stated, rates for rental of equipment cover only such time as equipment is actually used and no allowance will be made for idle time. This last percentage shown is the net accumulated increase or decrease from the original quantity in the Engineer's Estimate.

Adjustment of Compensation at Lump Sum:

The Contractor shall furnish specialized column forms to be used during the construction of the Yerba Buena Island Transition Structure (Br. No. 34-0006L/R), to the Department as detailed herein.

C4C1A 8-foot long corner forms, 40 each

C4RZ 8-foot long corner forms, 40 each

C4C1B-C 8-foot long corner forms, 20 each

C71C3 8-foot long corner forms, 11 each

C71C2 8-foot long corner forms, 11 each

21.21-inch by 8-foot long panel forms, 80 each

44.41-inch by 8-foot long panel forms, 15 each

All furnished forms shall be stored within the project site at the end of the Contract and become the property of the Department.

For this work, the Contractor shall be compensated an agreed lump sum of $140,800.00 which constitutes full and final compensation, including all markups, for all additional costs incurred.

Cost of Adjustment of Compensation at Lump Sum $140,800.00

Estimated Cost: **Increase** ☑ **Decrease** ☐ **$140,800.00**

By reason of this order the time of completion will be adjusted as follows: 0 days

Submitted by

Signature	Resident Engineer	Date
Deanna Vilcheck	for JEANNIE BALDERRAMOS	8/27/10

Approval Recommended by

Signature	Area Construction Manager	Date
Deanna Vilcheck	DEANNA VILCHECK	8/27/10

Engineer Approval by

Signature	Area Construction Manager	Date
Deanna Vilcheck	DEANNA VILCHECK	10/6/10

We the undersigned contractor, have given careful consideration to the change proposed and agree, if this proposal is approved, that we will provide all equipment, furnish the materials, except as may otherwise be noted above, and perform all services necessary for the work above specified, and will accept as full payment therefor the prices shown above.

NOTE: If you, the contractor, do not sign acceptance of this order, your attention is directed to the requirements of the specifications as to proceeding with the ordered work and filing a written protest within the time therein specified.

Contractor Acceptance by

Signature	(Print name and title)	Date
	Daniel E. Himick, President	10-1-2010

CONTRACT CHANGE ORDER

Change Requested by: Engineer

CCO: 263	Suppl. No. 0	Contract No. 04 - 0120R4	Road SF-80-12.6/13.2	FED. AID LOC.:

To: CC MYERS INC

You are directed to make the following changes from the plans and specifications or do the following described work not included in the plans and specifications for this contract. ***NOTE: This change order is not effective until approved by the Engineer.***

Description of work to be done, estimate of quantities and prices to be paid. (Segregate between additional work at contract price, agreed price and force account.) Unless otherwise stated, rates for rental of equipment cover only such time as equipment is actually used and no allowance will be made for idle time. This last percentage shown is the net accumulated increase or decrease from the original quantity in the Engineer's Estimate.

Adjustment of Compensation at Lump Sum:

Eliminate the installation of Drainage System No. 7 as shown on Sheet No. 2 of this change order.

For this work, the Contractor shall credit the Department an agreed lump sum of $53,830.00 which constitutes full and final compensation, including all markups, for all cost savings associated with the elimination of this work.

The precast G2M inlet and 24 meters of 450 mm APC that were purchased prior to the elimination of this work under this change order shall be furnished to the Department and stored on the project site for future use on a subsequent contract. Compensation for furnishing this material is included in the lump sum credit being provided under this change order.

Cost of Adjustment of Compensation at Lump Sum .....($53,830.00)

Estimated Cost: Increase ☐ **Decrease** ☑ **($53,830.00)**

By reason of this order the time of completion will be adjusted as follows: 0 days

Submitted by

Signature	Resident Engineer	Date
	JEANNIE BALDERRAMOS	9-27-10

Approval Recommended by

Signature	Area Construction Manager	Date
Deanna Vilcheck	DEANNA VILCHECK	9/30/10

Engineer Approval by

Signature	Area Construction Manager	Date
Deanna Vilcheck	DEANNA VILCHECK	10/11/10

We the undersigned contractor, have given careful consideration to the change proposed and agree, if this proposal is approved, that we will provide all equipment, furnish the materials, except as may otherwise be noted above, and perform all services necessary for the work above specified, and will accept as full payment therefor the prices shown above.

NOTE: If you, the contractor, do not sign acceptance of this order, your attention is directed to the requirements of the specifications as to proceeding with the ordered work and filing a written protest within the time therein specified.

Contractor Acceptance by

Signature	(Print name and title)	Date
	Steve Francis, Chief Estimator	10-7-10

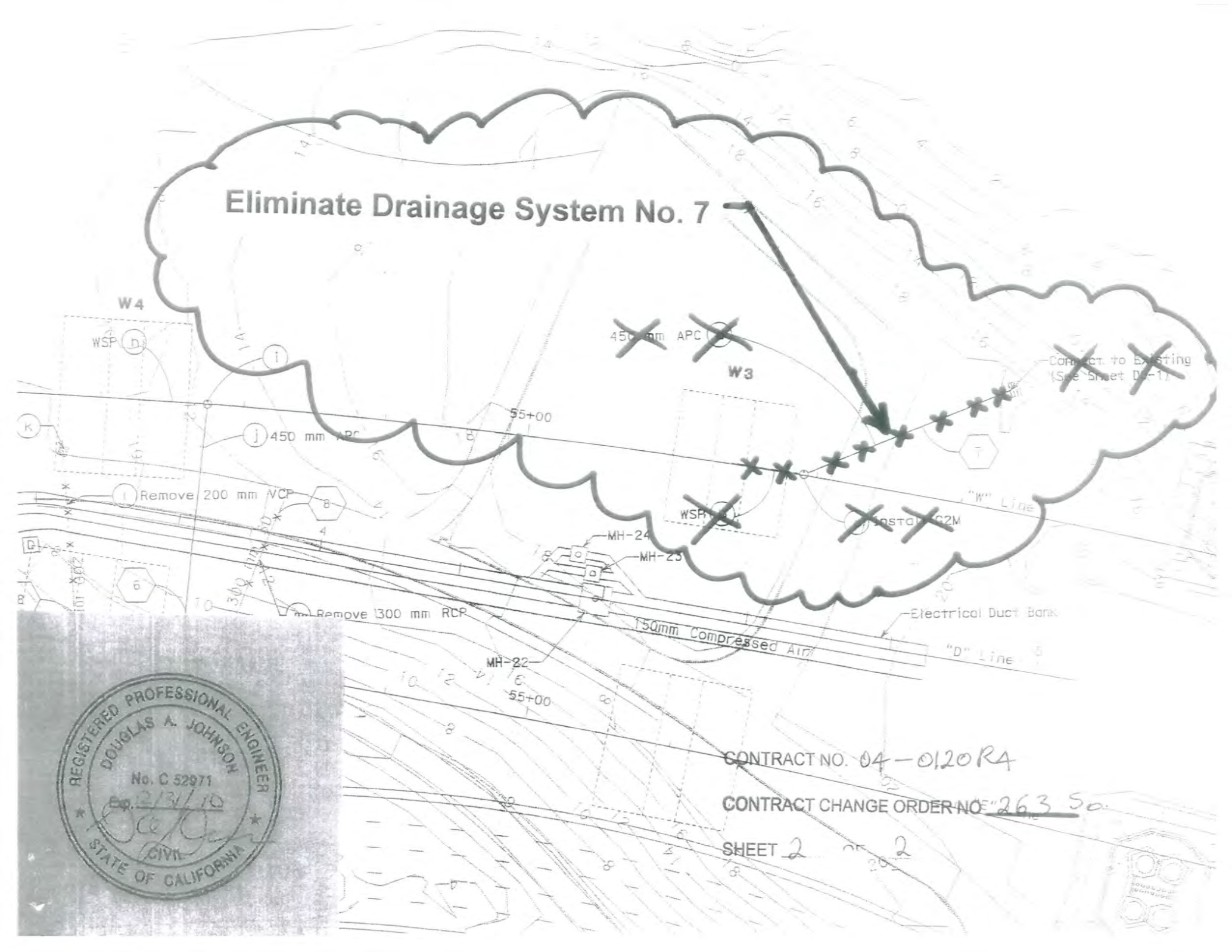
Eliminate Drainage System No. 7
W4
WSP
450 mm APC
W3
55+00
Remove 200 mm VCP
Remove 300 mm RCP
MH-24
MH-25
MH-22
150mm Compressed Air
Electrical Duct Bank
"D" Line
"W" Line
55+00
REGISTERED PROFESSIONAL ENGINEER
DOUGLAS A. JOHNSON
No. C 52971
Exp. 12/31/10
CIVIL
STATE OF CALIFORNIA
CONTRACT NO. 04-0120R4
CONTRACT CHANGE ORDER NO. 263.50
SHEET 2 OF 2

CONTRACT CHANGE ORDER

Change Requested by: Engineer

CCO: 264	Suppl. No. 0	Contract No. 04 - 0120R4	Road SF-80-12.6/13.2	FED. AID LOC.:

To: **CC MYERS INC**

You are directed to make the following changes from the plans and specifications or do the following described work not included in the plans and specifications for this contract. ***NOTE: This change order is not effective until approved by the Engineer.***

Description of work to be done, estimate of quantities and prices to be paid. (Segregate between additional work at contract price, agreed price and force account.) Unless otherwise stated, rates for rental of equipment cover only such time as equipment is actually used and no allowance will be made for idle time. This last percentage shown is the net accumulated increase or decrease from the original quantity in the Engineer's Estimate.

Extra Work at Force Account:

Furnish and install fencing, concrete barrier (Type K), barricades and other traffic control devices in order to control vehicle and pedestrian access to the project site as determined by the Engineer.

Estimated cost of Extra Work at Force Account $150,000.00

Estimated Cost: Increase ☑ **Decrease** ☐ **$150,000.00**

By reason of this order the time of completion will be adjusted as follows: 0 days

Submitted by		
Signature Deanna Vilcheck	**Resident Engineer** for JEANNIE BALDERRAMOS	**Date** 8/25/10
Approval Recommended by		
Signature Deanna Vilcheck	**Area Construction Manager** DEANNA VILCHECK	**Date** 8/25/10
Engineer Approval by		
Signature Deanna Vilcheck	**Area Construction Manager** DEANNA VILCHECK	**Date** 9/9/10

We the undersigned contractor, have given careful consideration to the change proposed and agree, if this proposal is approved, that we will provide all equipment, furnish the materials, except as may otherwise be noted above, and perform all services necessary for the work above specified, and will accept as full payment therefor the prices shown above.

NOTE: If you, the contractor, do not sign acceptance of this order, your attention is directed to the requirements of the specifications as to proceeding with the ordered work and filing a written protest within the time therein specified.

Contractor Acceptance by		
Signature	**(Print name and title)** Daniel E. Himick, President	**Date** 9/1/10

STATE OF CALIFORNIA - DEPARTMENT OF TRANSPORTATION

CONTRACT CHANGE ORDER

Change Requested by: Engineer

CCO: 265	Suppl. No. 0	Contract No. 04 - 0120R4	Road SF-80-12.6/13.2	FED. AID LOC.:

To: **CC MYERS INC**

You are directed to make the following changes from the plans and specifications or do the following described work not included in the plans and specifications for this contract. ***NOTE: This change order is not effective until approved by the Engineer.***

Description of work to be done, estimate of quantities and prices to be paid. (Segregate between additional work at contract price, agreed price and force account.) Unless otherwise stated, rates for rental of equipment cover only such time as equipment is actually used and no allowance will be made for idle time. This last percentage shown is the net accumulated increase or decrease from the original quantity in the Engineer's Estimate.

Adjustment of Compensation at Lump Sum:

Provide compensation to the Contractor for all outstanding labor and equipment costs incurred during the construction of Bents W5, W6 and W7 in order to mitigate Department delays to the Contract. For these costs, the Contractor shall be compensated an agreed lump sum of $176,590.00 which constitutes full and final compensation, including all markups, for this change.

Cost of Adjustment of Compensation at Agreed Lump Sum.....$176,590.00

Estimated Cost: **Increase** ☑ **Decrease** ☐ **$176,590.00**

By reason of this order the time of completion will be adjusted as follows: 0 days

Submitted by

Signature	Resident Engineer	Date
J Balderramos	JEANNIE BALDERRAMOS	9-27-10

Approval Recommended by

Signature	Area Construction Manager	Date
Michael Foome	DEANNA VILCHECK	9-27-10

Engineer Approval by

Signature	Area Construction Manager	Date
Deanna Vilcheck	DEANNA VILCHECK	10/6/10

We the undersigned contractor, have given careful consideration to the change proposed and agree, if this proposal is approved, that we will provide all equipment, furnish the materials, except as may otherwise be noted above, and perform all services necessary for the work above specified, and will accept as full payment therefor the prices shown above.

NOTE: If you, the contractor, do not sign acceptance of this order, your attention is directed to the requirements of the specifications as to proceeding with the ordered work and filing a written protest within the time therein specified.

Contractor Acceptance by

Signature	(Print name and title)	Date
D E Himick	Daniel E. Himick, President	10-4-2010

STATE OF CALIFORNIA - DEPARTMENT OF TRANSPORTATION

CONTRACT CHANGE ORDER

Change Requested by: Engineer

CCO: 266	Suppl. No. 0	Contract No. 04 - 0120R4	Road SF-80-12.6/13.2	FED. AID LOC.:

To: **CC MYERS INC**

You are directed to make the following changes from the plans and specifications or do the following described work not included in the plans and specifications for this contract. ***NOTE: This change order is not effective until approved by the Engineer.***

Description of work to be done, estimate of quantities and prices to be paid. (Segregate between additional work at contract price, agreed price and force account.) Unless otherwise stated, rates for rental of equipment cover only such time as equipment is actually used and no allowance will be made for idle time. This last percentage shown is the net accumulated increase or decrease from the original quantity in the Engineer's Estimate.

Adjustment of Compensation at Lump Sum:

The Contractor shall credit the Department for the reduced scope of work performed under Contract Bid Item No. 2 "Construction Staking" due to the changes ordered by the Department to the East Tie-In and West Tie-In structures.

For this work, the Contractor shall credit the Department an agreed lump sum of $27,300.00 which constitutes full and final compensation, including all markups, for all cost savings associated with the change in scope of this item of work.

Cost of Adjustment of Compensation at Lump Sum .....($27,300.00)

Estimated Cost: **Increase** ☐ **Decrease** ☑ **($27,300.00)**

By reason of this order the time of completion will be adjusted as follows: 0 days

Submitted by

Signature	Resident Engineer	Date
Jeannie Balderrama	JEANNIE BALDERRAMOS	2-11-18

Approval Recommended by

Signature	Senior Resident Engineer	Date
Jeannie Balderrama	JEANNIE BALDERRAMOS	2-11-18

Engineer Approval by

Signature	Senior Resident Engineer	Date
	JEANNIE BALDERRAMOS	

We the undersigned contractor, have given careful consideration to the change proposed and agree, if this proposal is approved, that we will provide all equipment, furnish the materials, except as may otherwise be noted above, and perform all services necessary for the work above specified, and will accept as full payment therefor the prices shown above.

NOTE: If you, the contractor, do not sign acceptance of this order, your attention is directed to the requirements of the specifications as to proceeding with the ordered work and filing a written protest within the time therein specified.

Contractor Acceptance by

Signature	(Print name and title)	Date
	Steve Francis, Vice President	3.2.11